AUTHENTICATED
U.S. GOVERNMENT
INFORMATION
GPO

Federal Register

12–10–08 Wednesday
Vol. 73 No. 238 Dec. 10, 2008

Pages 74927–75304

The **FEDERAL REGISTER** (ISSN 0097–6326) is published daily, Monday through Friday, except official holidays, by the Office of the Federal Register, National Archives and Records Administration, Washington, DC 20408, under the Federal Register Act (44 U.S.C. Ch. 15) and the regulations of the Administrative Committee of the Federal Register (1 CFR Ch. I). The Superintendent of Documents, U.S. Government Printing Office, Washington, DC 20402 is the exclusive distributor of the official edition. Periodicals postage is paid at Washington, DC.

The **FEDERAL REGISTER** provides a uniform system for making available to the public regulations and legal notices issued by Federal agencies. These include Presidential proclamations and Executive Orders, Federal agency documents having general applicability and legal effect, documents required to be published by act of Congress, and other Federal agency documents of public interest.

Documents are on file for public inspection in the Office of the Federal Register the day before they are published, unless the issuing agency requests earlier filing. For a list of documents currently on file for public inspection, see *www.federalregister.gov*.

The seal of the National Archives and Records Administration authenticates the Federal Register as the official serial publication established under the Federal Register Act. Under 44 U.S.C. 1507, the contents of the **Federal Register** shall be judicially noticed.

The **Federal Register** is published in paper and on 24x microfiche. It is also available online at no charge as one of the databases on GPO Access, a service of the U.S. Government Printing Office.

The online edition of the **Federal Register** *www.gpoaccess.gov/nara*, available through GPO Access, is issued under the authority of the Administrative Committee of the Federal Register as the official legal equivalent of the paper and microfiche editions (44 U.S.C. 4101 and 1 CFR 5.10). It is updated by 6 a.m. each day the **Federal Register** is published and includes both text and graphics from Volume 59, Number 1 (January 2, 1994) forward.

For more information about GPO Access, contact the GPO Access User Support Team, call toll free 1-888-293-6498; DC area 202-512-1530; fax at 202-512-1262; or via e-mail at *gpoaccess@gpo.gov*. The Support Team is available between 7:00 a.m. and 9:00 p.m. Eastern Time, Monday–Friday, except official holidays.

The annual subscription price for the **Federal Register** paper edition is $749 plus postage, or $808, plus postage, for a combined **Federal Register, Federal Register** Index and List of CFR Sections Affected (LSA) subscription; the microfiche edition of the **Federal Register** including the **Federal Register** Index and LSA is $165, plus postage. Six month subscriptions are available for one-half the annual rate. The prevailing postal rates will be applied to orders according to the delivery method requested. The price of a single copy of the daily **Federal Register,** including postage, is based on the number of pages: $11 for an issue containing less than 200 pages; $22 for an issue containing 200 to 400 pages; and $33 for an issue containing more than 400 pages. Single issues of the microfiche edition may be purchased for $3 per copy, including postage. Remit check or money order, made payable to the Superintendent of Documents, or charge to your GPO Deposit Account, VISA, MasterCard, American Express, or Discover. Mail to: U.S. Government Printing Office—New Orders, P.O. Box 979050, St. Louis, MO 63197-9000; or call toll free 1-866-512-1800, DC area 202-512-1800; or go to the U.S. Government Online Bookstore site, see *bookstore.gpo.gov*.

There are no restrictions on the republication of material appearing in the **Federal Register.**

How To Cite This Publication: Use the volume number and the page number. Example: 73 FR 12345.

Postmaster: Send address changes to the Superintendent of Documents, Federal Register, U.S. Government Printing Office, Washington, DC 20402, along with the entire mailing label from the last issue received.

SUBSCRIPTIONS AND COPIES

PUBLIC	
Subscriptions:	
Paper or fiche	**202–512–1800**
Assistance with public subscriptions	**202–512–1806**
General online information	**202–512–1530; 1–888–293–6498**
Single copies/back copies:	
Paper or fiche	**202–512–1800**
Assistance with public single copies	**1–866–512–1800 (Toll-Free)**
FEDERAL AGENCIES	
Subscriptions:	
Paper or fiche	**202–741–6005**
Assistance with Federal agency subscriptions	**202–741–6005**

Printed on recycled paper.

Contents

Federal Register

Vol. 73, No. 238

Wednesday, December 10, 2008

Air Force Department
NOTICES
Intent to Grant an Exclusive Patent License, 75085–75086

Broadcasting Board of Governors
NOTICES
Meetings; Sunshine Act; Cancellation, 75077

Coast Guard
RULES
Drawbridge Operation Regulation:
Long Island, New York Inland Waterway from East Rockaway Inlet to Shinnecock Canal, Hempstead, NY, Maintenance, 74966

Commerce Department
See Economic Development Administration
See International Trade Administration
See National Oceanic and Atmospheric Administration
See Patent and Trademark Office

Committee for the Implementation of Textile Agreements
NOTICES
Cancellation of Electronic Visa Information System (ELVIS) Requirements:
Textiles and Textile Products Produced or Manufactured in the People's Republic of China (Exported on and After January 1, 2009), 75085

Defense Department
See Air Force Department
RULES
TRICARE; Hospital Outpatient Prospective Payment System (OPPS), 74945–74966

Economic Development Administration
NOTICES
Petitions by Firms for Determination of Eligibility to Apply for Trade Adjustment Assistance, 75077

Education Department
NOTICES
Agency Information Collection Activities; Proposals, Submissions, and Approvals, 75086–75087

Employee Benefits Security Administration
NOTICES
Charter Renewal:
Advisory Council on Employee Welfare and Pension Benefit Plans, 75133–75134

Employment and Training Administration
NOTICES
Determinations Regarding Eligibility to Apply for Worker Adjustment Assistance and Alternative Trade Adjustment Assistance, 75134–75138
Investigations Regarding Certifications of Eligibility to Apply for Worker Adjustment Assistance and Alternative Trade Adjustment Assistance, 75138–75139
Revised Determination on Reconsideration:
3M Precision Optics, Inc.; Cincinnati, OH, 75139–75140
Termination of Investigation:
Casey Tool & Machine Co., Inc.; Charleston, IL, 75140
Haas TCM Inc.; Fenton, MO, 75140
Scott Curtis Construction Co., Inc.; Granite Falls, NC, 75140
Weather Shield Manufacturing, Inc.; Medford, WI, 75140

Energy Department
See National Nuclear Security Administration
NOTICES
Extension of Public Comment Period on the Draft Global Nuclear Energy Partnership Programmatic Environmental Impact Statement, 75087–75088

Environmental Protection Agency
RULES
Pesticide Tolerance:
Mefenpyr-diethyl and Metabolites, 74972–74977
Pesticide Tolerances:
Novaluron, 74978–74983
Repeal of Obsolete Regulations Under the Marine Protection, Research, and Sanctuaries Act:
Regarding Interim Ocean Dumping Sites, Interim Ocean Dumping Permits, and Interim Ocean Dumping Criteria, 74983–74987
NOTICES
Agency Information Collection Activities; Proposals, Submissions, and Approvals:
NESHAP for Primary Lead Smelters, 75090–75091
NESHAP for Steel Pickling, HCl Process Facilities and Hydrochloric Acid Regeneration Plants (Renewal), 75091–75092
Pesticide Registration by States to Meet a Special Local Need, 75094–75096
Pesticide Registration Fees Program, 75092–75094
Schools Chemical Cleanout Campaign, 75096–75097
Amendment to Use Deletion and Product Cancellation Order:
Fenamiphos, 75097–75099
Meetings:
FIFRA Scientific Advisory Panel, 75099–75104
Modification to the NPDES General Permit for Oil and Gas Exploration:
Development and Production Facilities in State and Federal Waters in Cook Inlet, AK, 75104
Receipt of Request for Amendment to Delete Uses in Certain Pesticide Registrations, 75104–75105
Receipt of Requests to Voluntarily Cancel Certain Pesticide Registrations, 75105–75115

Executive Office of the President
See Presidential Documents

Federal Aviation Administration
RULES
Standard Instrument Approach Procedures, and Takeoff Minimums and Obstacle Departure Procedures; Miscellaneous Amendments, 74927–74930
PROPOSED RULES
Airworthiness Directives:
Air Tractor, Inc. Models AT-400, AT-401, AT-401B, AT-402, AT-402A, and AT-402B Airplanes, 74999–75007
Boeing Model 707 Airplanes and Model 720 and 720B Series Airplanes, 75007–75009

Boeing Model 727 Airplanes, 75009–75011
Proposed Amendment of Class E Airspace:
Guam Island, GU and Saipan Island, CQ, 75011–75013
Proposed Removal and Modification of VOR Federal Airways; Alaska, 75013–75015

Federal Deposit Insurance Corporation
NOTICES
FDIC Advisory Committee on Economic Inclusion; Charter Renewal, 75115–75116

Federal Emergency Management Agency
NOTICES
Disaster Declarations:
California, 75123
Missouri, 75123
Texas, 75123–75124

Federal Maritime Commission
NOTICES
Agreements Filed, 75116
Ocean Transportation Intermediary License Applicants, 75116

Federal Motor Carrier Safety Administration
NOTICES
Exemption Applications; Drivers Qualifications:
Diabetes, 75163–75165
Epilepsy and Seizure Disorders, 75165–75167

Federal Railroad Administration
NOTICES
Agency Information Collection Activities; Proposals, Submissions, and Approvals, 75167–75171

Federal Reserve System
PROPOSED RULES
Truth in Lending, 74989–74999
NOTICES
Formations of, Acquisitions by, and Mergers of Bank Holding Companies, 75116–75117

Federal Trade Commission
NOTICES
Granting of Request for Early Termination of Waiting Period Under Premerger Notification Rules, 75117–75118

Fish and Wildlife Service
RULES
General Regulations for Areas Administered by the National Park Service and the Fish and Wildlife Service, 74966–74972
PROPOSED RULES
Endangered and Threatened Wildlife and Plants:
Review of Native Species That Are Candidates for Listing as Endangered or Threatened; Annual Notice of Findings on Resubmitted Petitions; Annual Description, 75176–75244
NOTICES
Agency Information Collection Activities; Proposals, Submissions, and Approvals, 75124–75127
Issuance of Permits, 75127–75128
Meetings:
North American Wetlands Conservation Council, 75128
Receipt of Applications for Permit, 75128–75130

General Services Administration
NOTICES
Meetings:
Multiple Award Schedule Advisory Panel, 75118

Health and Human Services Department
See Health Resources and Services Administration
See National Institutes of Health
See Substance Abuse and Mental Health Services Administration
PROPOSED RULES
Approval Tests and Standards for Closed-Circuit Escape Approval Tests and Standards for Closed-Circuit Escape, 75027–75045
Quality Assurance Requirements for Respirators, 75045–75057
NOTICES
Decision to Evaluate a Petition to Designate a Class of Employees to be Included in the Special Exposure Cohort:
Mallinckrodt Chemical Co., Destrehan Street Plant in St. Louis, MO, 75118
Metallurgical Laboratory in Chicago, IL, 75118
Vitro Manufacturing in Canonsburg, PA, 75118–75119
Final Effect of Designation of a Class of Employees for Addition to the Special Exposure Cohort, 75119
Findings of Scientific Misconduct, 75119–75120

Health Resources and Services Administration
NOTICES
Agency Information Collection Activities; Proposals, Submissions, and Approvals, 75120–75121

Homeland Security Department
See Coast Guard
See Federal Emergency Management Agency

Interior Department
See Fish and Wildlife Service
See Land Management Bureau
See National Park Service
See Surface Mining Reclamation and Enforcement Office

International Trade Administration
RULES
Withdrawal of the Regulatory Provisions Governing Targeted Dumping in Antidumping Duty Investigations, 74930–74932
NOTICES
Antidumping:
Ball Bearings from Germany, 75078
Frozen Fish Fillets from the Socialist Republic of Vietnam, 75078–75079
Hot-Rolled Carbon Steel Flat Products from Thailand, 75079
Hot-Rolled, Flat-Rolled Carbon Quality Steel Products from Brazil, 75079–75081
Porcelain-on-Steel Cooking Ware from the People's Republic of China, 75081–75082
Preserved Mushrooms from the People's Republic of China, 75083–75084

International Trade Commission
NOTICES
Investigations:
Certain Semiconductor Chips Having Synchronous Dynamic Random Access Memory Controllers and Products Containing Same, 75131–75132

Uncovered Innerspring Units from South Africa and Vietnam, 75132

Justice Department
RULES
DNA-Sample Collection and Biological Evidence Preservation in the Federal Jurisdiction, 74932–74943

Labor Department
See Employee Benefits Security Administration
See Employment and Training Administration
See Occupational Safety and Health Administration
NOTICES
Agency Information Collection Activities; Proposals, Submissions, and Approvals, 75132–75133

Land Management Bureau
NOTICES
Competitive Coal Lease Sales:
Wyoming, 75130–75131

National Highway Traffic Safety Administration
NOTICES
Receipt of Petition for Decision:
Nonconforming 2005-2006 Porsche Carrera Cabriolet Passenger Cars Manufactured Prior to September 1, 2006 are Eligible for Importation, 75172–75174
Receipt of Petition for Decision of Inconsequential Noncompliance:
Adrian Steel Co. on behalf of Commercial Truck and Van, 75171–75172

National Institutes of Health
NOTICES
Agency Information Collection Activities; Proposals, Submissions, and Approvals, 75121
Government-Owned Inventions; Availability for Licensing, 75121–75122

National Nuclear Security Administration
NOTICES
Amended Record of Decision:
Surplus Plutonium Disposition; Waste Solidification Building, 75088–75090

National Oceanic and Atmospheric Administration
RULES
Fisheries of the Exclusive Economic Zone Off Alaska:
Reallocation of Pacific Cod in the Bering Sea and Aleutian Islands Management Area, 74987–74988
PROPOSED RULES
Fisheries in the Western Pacific:
Bottomfish and Seamount Groundfish Fisheries; 2008-09 Main Hawaiian Islands Bottomfish Total Allowable Catch, 75057–75059
Fisheries of the Exclusive Economic Zone Off Alaska:
Bering Sea and Aleutian Islands; Proposed 2009 and 2010 Harvest Specifications for Groundfish, 75059–75076
NOTICES
Marine Mammals; Application:
Associated Scientists at Woods Hole, 75084–75085

National Park Service
RULES
General Regulations for Areas Administered by the National Park Service and the Fish and Wildlife Service, 74966–74972

Nuclear Regulatory Commission
NOTICES
Acceptance for Docketing of an Application for Combined License (COL) for River Bend (Unit 3):
Entergy Operations, Inc, et al., 75141
Luminant Generation Co. LLC, 75141–75142
Agency Information Collection Activities; Proposals, Submissions, and Approvals, 75142
Environmental Impact Statements; Availability, etc.:
Detroit Edison Co.; Fermi Nuclear Power Plant, Unit 3 Combined License Application, 75142–75144

Occupational Safety and Health Administration
RULES
Longshoring and Marine Terminals; Vertical Tandem Lifts, 75246–75290

Patent and Trademark Office
RULES
Rules of Practice Before the Board of Patent Appeals and Interferences in Ex Parte Appeals; Delay of Effective and Applicability Dates, 74972

Presidential Documents
PROCLAMATIONS
World War II Valor in the Pacific National Monument; establishment (Proc. 8327), 75291–75304

Securities and Exchange Commission
NOTICES
Securities Exchange Act (of 1934):
Order Granting Registration of Egan-Jones Rating Company to Add Two Additional Classes of Credit Ratings, 75144
Self-Regulatory Organizations; Proposed Rule Changes:
American Stock Exchange LLC, 75144–75148
American Stock Exchange LLC et al., 75148–75150
NYSE Alternext US LLC, 75151–75154
NYSE Arca, Inc., 75154–75159
NYSE Arca, Inc.; Correction, 75159
Options Clearing Corp., 75159–75161
The Depository Trust Company, 75161
The NASDAQ Stock Market LLC, 75161–75163

Small Business Administration
NOTICES
Meetings:
SBA North Florida District Advisory Council, 75163

State Department
PROPOSED RULES
Exchange Visitor Program, 75015–75027
NOTICES
Public Hearings on Study of Critical Sources of Phosphorus Loadings to Missisquoi Bay, 75163

Substance Abuse and Mental Health Services Administration

NOTICES
Mandatory Guidelines for Federal Workplace Drug Testing Programs; Correction, 75122

Surface Mining Reclamation and Enforcement Office
RULES
Mississippi Regulatory Program, 74943–74945

Textile Agreements Implementation Committee
See Committee for the Implementation of Textile Agreements

Transportation Department
See Federal Aviation Administration
See Federal Motor Carrier Safety Administration
See Federal Railroad Administration
See National Highway Traffic Safety Administration

Separate Parts In This Issue

Part II
Interior Department, Fish and Wildlife Service, 75176–75244

Part III
Labor Department, Occupational Safety and Health Administration, 75246–75290

Part IV
Executive Office of the President, Presidential Documents, 75291–75304

Reader Aids

Consult the Reader Aids section at the end of this issue for phone numbers, online resources, finding aids, reminders, and notice of recently enacted public laws.

To subscribe to the Federal Register Table of Contents LISTSERV electronic mailing list, go to http://listserv.access.gpo.gov and select Online mailing list archives, FEDREGTOC-L, Join or leave the list (or change settings); then follow the instructions.

CFR PARTS AFFECTED IN THIS ISSUE

A cumulative list of the parts affected this month can be found in the Reader Aids section at the end of this issue.

3 CFR

Proclamations:

8327 75293

12 CFR

Proposed Rules:

226 74989

14 CFR

97 (2 documents) 74927, 74928

Proposed Rules:

39 (3 documents) 74999, 75007, 75009

71 (2 documents) 75011, 75013

19 CFR

351 74930

22 CFR

Proposed Rules:

62 75015

28 CFR

28 74932

29 CFR

1917 75246

1918 75246

30 CFR

924 74943

32 CFR

199 74945

33 CFR

117 74966

36 CFR

2 74966

37 CFR

41 74972

40 CFR

180 (2 documents) 74972, 74978

220 74983

221 74983

222 74983

223 74983

224 74983

227 74983

228 74983

42 CFR

Proposed Rules:

84 (2 documents) 75027, 75045

50 CFR

27 74966

679 74987

Proposed Rules:

17 75176

665 75057

679 75059

Rules and Regulations

Federal Register
Vol. 73, No. 238
Wednesday, December 10, 2008

This section of the FEDERAL REGISTER contains regulatory documents having general applicability and legal effect, most of which are keyed to and codified in the Code of Federal Regulations, which is published under 50 titles pursuant to 44 U.S.C. 1510.

The Code of Federal Regulations is sold by the Superintendent of Documents. Prices of new books are listed in the first FEDERAL REGISTER issue of each week.

DEPARTMENT OF TRANSPORTATION

Federal Aviation Administration

14 CFR Part 97

[Docket No. 30641; Amdt. No. 3299]

Standard Instrument Approach Procedures, and Takeoff Minimums and Obstacle Departure Procedures; Miscellaneous Amendments

AGENCY: Federal Aviation Administration (FAA), DOT.

ACTION: Final rule.

SUMMARY: This rule establishes, amends, suspends, or revokes Standard Instrument Approach Procedures (SIAPs) and associated Takeoff Minimums and Obstacle Departure Procedures for operations at certain airports. These regulatory actions are needed because of the adoption of new or revised criteria, or because of changes occurring in the National Airspace System, such as the commissioning of new navigational facilities, adding new obstacles, or changing air traffic requirements. These changes are designed to provide safe and efficient use of the navigable airspace and to promote safe flight operations under instrument flight rules at the affected airports.

DATES: This rule is effective December 10, 2008. The compliance date for each SIAP, associated Takeoff Minimums, and ODP is specified in the amendatory provisions.

The incorporation by reference of certain publications listed in the regulations is approved by the Director of the Federal Register as of December 10, 2008.

ADDRESSES: Availability of matter incorporated by reference in the amendment is as follows:

For Examination—

1. FAA Rules Docket, FAA Headquarters Building, 800 Independence Avenue, SW., Washington, DC 20591;
2. The FAA Regional Office of the region in which the affected airport is located;
3. The National Flight Procedures Office, 6500 South MacArthur Blvd., Oklahoma City, OK 73169 or,
4. The National Archives and Records Administration (NARA). For information on the availability of this material at NARA, call 202–741–6030, or go to: *http://www.archives.gov/federal_register/code_of_federal_regulations/ibr_locations.html.*

Availability—All SIAPs are available online free of charge. Visit nfdc.faa.gov to register. Additionally, individual SIAP and Takeoff Minimums and ODP copies may be obtained from:

1. FAA Public Inquiry Center (APA–200), FAA Headquarters Building, 800 Independence Avenue, SW., Washington, DC 20591; or
2. The FAA Regional Office of the region in which the affected airport is located.

FOR FURTHER INFORMATION CONTACT: Harry J. Hodges, Flight Procedure Standards Branch (AFS–420) Flight Technologies and Programs Division, Flight Standards Service, Federal Aviation Administration, Mike Monroney Aeronautical Center, 6500 South MacArthur Blvd., Oklahoma City, OK. 73169 (Mail Address: P.O. Box 25082 Oklahoma City, OK. 73125) telephone: (405) 954–4164.

SUPPLEMENTARY INFORMATION: This rule amends Title 14, Code of Federal Regulations, Part 97 (14 CFR part 97) by amending the referenced SIAPs. The complete regulatory description of each SIAP is listed on the appropriate FAA Form 8260, as modified by the National Flight Data Center (FDC)/Permanent Notice to Airmen (P–NOTAM), and is incorporated by reference in the amendment under 5 U.S.C. 552(a), 1 CFR part 51, and § 97.20 of Title 14 of the Code of Federal Regulations.

The large number of SIAPs, their complex nature, and the need for a special format make their verbatim publication in the **Federal Register** expensive and impractical. Further, airmen do not use the regulatory text of the SIAPs, but refer to their graphic depiction on charts printed by publishers of aeronautical materials. Thus, the advantages of incorporation by reference are realized and publication of the complete description of each SIAP contained in FAA form documents is unnecessary. This amendment provides the affected CFR sections and specifies the types of SIAP and the corresponding effective dates. This amendment also identifies the airport and its location, the procedure and the amendment number.

The Rule

This amendment to 14 CFR part 97 is effective upon publication of each separate SIAP as amended in the transmittal. For safety and timeliness of change considerations, this amendment incorporates only specific changes contained for each SIAP as modified by FDC/P–NOTAMs.

The SIAPs, as modified by FDC P–NOTAM, and contained in this amendment are based on the criteria contained in the U.S. Standard for Terminal Instrument Procedures (TERPS). In developing these changes to SIAPs, the TERPS criteria were applied only to specific conditions existing at the affected airports. All SIAP amendments in this rule have been previously issued by the FAA in a FDC NOTAM as an emergency action of immediate flight safety relating directly to published aeronautical charts. The circumstances which created the need for all these SIAP amendments requires making them effective in less than 30 days.

Because of the close and immediate relationship between these SIAPs and safety in air commerce, I find that notice and public procedure before adopting these SIAPs are impracticable and contrary to the public interest and, where applicable, that good cause exists for making these SIAPs effective in less than 30 days.

Conclusion

The FAA has determined that this regulation only involves an established body of technical regulations for which frequent and routine amendments are necessary to keep them operationally current. It, therefore—(1) is not a ''significant regulatory action'' under DOT Regulatory Order 12866; (2) is not a ''significant rule'' under DOT regulatory Policies and Procedures (44 FR 11034; February 26, 1979); and (3) does not warrant preparation of a regulatory evaluation as the anticipated impact is so minimal. For the same

reason, the FAA certifies that this amendment will not have a significant economic impact on a substantial number of small entities under the criteria of the Regulatory Flexibility Act.

List of Subjects in 14 CFR Part 97

Air traffic control, Airports, Incorporation by reference, and Navigation (air).

Issued in Washington, DC on November 28, 2008.

John M. Allen,

Deputy Director, Flight Standards Service.

Adoption of the Amendment

■ Accordingly, pursuant to the authority delegated to me, Title 14, Code of Federal regulations, Part 97, 14 CFR part 97, is amended by amending Standard Instrument Approach Procedures, effective at 0901 UTC on the dates specified, as follows:

PART 97—STANDARD INSTRUMENT APPROACH PROCEDURES

■ 1. The authority citation for part 97 continues to read as follows:

Authority: 49 U.S.C. 106(g), 40103, 40106, 40113, 40114, 40120, 44502, 44514, 44701, 44719, 44721–44722.

■ 2. Part 97 is amended to read as follows:

By amending: § 97.23 VOR, VOR/DME, VOR or TACAN, and VOR/DME or TACAN; § 97.25 LOC, LOC/DME, LDA, LDA/DME, SDF, SDF/DME; § 97.27 NDB, NDB/DME; § 97.29 ILS, ILS/DME, ISMLS, MLS/DME, MLS/RNAV; § 97.31 RADAR SIAPs; § 97.33 RNAV SIAPs; and § 97.35 COPTER SIAPs, Identified as follows:

* * * Effective Upon Publication

FDC date	State	City	Airport	FDC No.	Subject
11/7/08	NY	NEW YORK	LA GUARDIA	8/8554	THIS NOTAM PUBLISHED IN TL08–26 IS HEREBY RESCINDED IN ITS' ENTIRETY. LDA–A, AMDT 2A.
11/13/08	CA	CHICO	CHICO MUNI	8/9181	GPS RWY 13L, ORIG–A.
11/14/08	LA	NATCHITOCHES	NATCHITOCHES RGNL	8/9331	LOC RWY 35, AMDT 3C.
11/17/08	WI	LA CROSSE	LA CROSSE MUNI	8/9679	RNAV (GPS) RWY 18, ORIG.
11/17/08	LA	NEW IBERIA	ACADIANA REGIONAL	8/9682	RNAV (GPS) RWY 16, ORIG.
11/17/08	LA	NEW IBERIA	ACADIANA REGIONAL	8/9686	VOR OR TACAN RWY 16, AMDT 1.
11/17/08	MN	INTERNATIONAL FALLS	FALLS INTL	8/9702	VOR RWY 31, AMDT 15.
11/24/08	NH	WHITEFIELD	MOUNT WASHINGTON REGIONAL.	8/1169	LOC/NDB RWY 10, AMDT 6.
10/15/08	SC	GREENWOOD	GREENWOOD COUNTY	8/3527	NDB OR GPS RWY 27, AMDT 1.
10/27/08	SC	HARTSVILLE	HARTSVILLE REGIONAL	8/4649	THIS NOTAM PUBLISHED IN TL 08–25 IS HEREBY RESCINDED IN ITS' ENTIREBY.

[FR Doc. E8–29008 Filed 12–9–08; 8:45 am]

BILLING CODE 4910–13–P

DEPARTMENT OF TRANSPORTATION

Federal Aviation Administration

14 CFR Part 97

[Docket No. 30640; Amdt. No. 3298]

Standard Instrument Approach Procedures, and Takeoff Minimums and Obstacle Departure Procedures; Miscellaneous Amendments

AGENCY: Federal Aviation Administration (FAA), DOT.

ACTION: Final rule.

SUMMARY: This establishes, amends, suspends, or revokes Standard Instrument Approach Procedures (SIAPs) and associated Takeoff Minimums and Obstacle Departure Procedures for operations at certain airports. These regulatory actions are needed because of the adoption of new or revised criteria, or because of changes occurring in the National Airspace System, such as the commissioning of new navigational facilities, adding new obstacles, or changing air traffic requirements. These changes are designed to provide safe and efficient use of the navigable airspace and to promote safe flight operations under instrument flight rules at the affected airports.

DATES: This rule is effective December 10, 2008. The compliance date for each SIAP, associated Takeoff Minimums, and ODP is specified in the amendatory provisions.

The incorporation by reference of certain publications listed in the regulations is approved by the Director of the Federal Register as of December 10, 2008.

ADDRESSES: Availability of matters incorporated by reference in the amendment is as follows:

For Examination—

1. FAA Rules Docket, FAA Headquarters Building, 800 Independence Avenue, SW., Washington, DC 20591;

2. The FAA Regional Office of the region in which the affected airport is located;

3. The National Flight Procedures Office, 6500 South MacArthur Blvd., Oklahoma City, OK 73169 or,

4. The National Archives and Records Administration (NARA). For information on the availability of this material at NARA, call 202–741–6030, or go to: *http://www.archives.gov/federal_register/code_of_federal_regulations/ibr_locations.html.*

Availability—All SIAPs and Takeoff Minimums and ODPs are available online free of charge. Visit *http://www.nfdc.faa.gov* to register. Additionally, individual SIAP and Takeoff Minimums and ODP copies may be obtained from:

1. FAA Public Inquiry Center (APA–200), FAA Headquarters Building, 800 Independence Avenue, SW., Washington, DC 20591; or

2. The FAA Regional Office of the region in which the affected airport is located.

FOR FURTHER INFORMATION CONTACT: Harry J. Hodges, Flight Procedure Standards Branch (AFS–420), Flight Technologies and Programs Divisions, Flight Standards Service, Federal Aviation Administration, Mike Monroney Aeronautical Center, 6500 South MacArthur Blvd., Oklahoma City, OK 73169 (Mail Address: P.O. Box 25082, Oklahoma City, OK 73125) Telephone: (405) 954–4164.

SUPPLEMENTARY INFORMATION: This rule amends Title 14 of the Code of Federal Regulations, Part 97 (14 CFR part 97), by establishing, amending, suspending, or revoking SIAPS, Takeoff Minimums and/or ODPs. The complete regulators description of each SIAP and its associated Takeoff Minimums or ODP for an identified airport is listed on FAA form documents which are incorporated by reference in this amendment under 5 U.S.C. 552(a), 1 CFR part 51, and 14 CFR part 97.20. The applicable FAA Forms are FAA Forms 8260–3, 8260–4, 8260–5, 8260–15A, and 8260–15B when required by an entry on 8260–15A.

The large number of SIAPs, Takeoff Minimums and ODPs, in addition to their complex nature and the need for a special format make publication in the **Federal Register** expensive and impractical. Furthermore, airmen do not use the regulatory text of the SIAPs, Takeoff Minimums or ODPs, but instead refer to their depiction on charts printed by publishers of aeronautical materials. The advantages of incorporation by reference are realized and publication of the complete description of each SIAP, Takeoff Minimum and ODP listed on FAA forms is unnecessary. This amendment provides the affected CFR sections and specifies the types of SIAPs and the effective dates of the associated Takeoff Minimums and ODPs. This amendment also identifies the airport and its location, the procedure, and the amendment number.

The Rule

This amendment to 14 CFR part 97 is effective upon publication of each separate SIAP, Takeoff Minimums and ODP as contained in the transmittal. Some SIAP and Takeoff Minimums and textual ODP amendments may have been issued previously by the FAA in a Flight Data Center (FDC) Notice to Airmen (NOTAM) as an emergency action of immediate flight safety relating directly to published aeronautical charts. The circumstances which created the need for some SIAP and Takeoff Minimums and ODP amendments may require making them effective in less than 30 days. For the remaining SIAPS and Takeoff Minimums and ODPs, an effective date at least 30 days after publication is provided.

Further, the SIAPs and Takeoff Minimums and ODPs contained in this amendment are based on the criteria contained in the U.S. Standard for Terminal Instrument Procedures (TERPS). In developing these SIAPS and Takeoff Minimums and ODPs, the TERPS criteria were applied to the conditions existing or anticipated at the affected airports. Because of the close and immediate relationship between these SIAPs, Takeoff Minimums and ODPs, and safety in air commerce, I find that notice and public procedures before adopting these SIAPS, Takeoff Minimums and ODPs are impracticable and contrary to the public interest and, where applicable, that good cause exists for making some SIAPs effective in less than 30 days.

Conclusion

The FAA has determined that this regulation only involves an established body of technical regulations for which frequent and routine amendments are necessary to keep them operationally current. It, therefore—(1) is not a ''significant regulatory action'' under DOT Regulatory Order 12866; (2) is not a ''significant rule'' under DOT Regulatory Policies and Procedures (44 FR 11034; February 26, 1979; and (3) does not warrant preparation of a regulatory evaluation as the anticipated impact is so minimal. For the same reason, the FAA certifies that this amendment will not have a significant economic impact on a substantial number of small entities under the criteria of the Regulatory Flexibility Act.

List of Subjects in 14 CFR Part 97

Air traffic control, Airports, Incorporation by reference, and Navigation (air).

Issued in Washington, DC, on November 28, 2008.

John M. Allen,

Deputy Director, Flight Standards Service.

Adoption of the Amendment

■ Accordingly, pursuant to the authority delegated to me, Title 14, Code of Federal Regulations, Part 97 (14 CFR part 97) is amended by establishing, amending, suspending, or revoking Standard Instrument Approach Procedures and/or Takeoff Minimums and/or Obstacle Departure Procedures effective at 0902 UTC on the dates specified, as follows:

PART 97—STANDARD INSTRUMENT APPROACH PROCEDURES

■ 1. The authority citation for part 97 continues to read as follows:

Authority: 49 U.S.C. 106(g), 40103, 40106, 40113, 40114, 40120, 44502, 44514, 44701, 44719, 44721–44722.

■ 2. Part 97 is amended to read as follows:

Effective 15 Jan 2009

Toksook Bay, AK, Toksook Bay, RNAV (GPS) RWY 34, Amdt 1
Toksook Bay, AK, Toksook Bay, Takeoff Minimums and Obstacle DP, Amdt 1
Troy, AL, Troy Muni, Radar-1, Amdt 8
Fayetteville, AR, Drake Field, Takeoff Minimums and Obstacle DP, Amdt 5
Arcata/Eureka, CA, Arcata, VOR RWY 14, Amdt 7B, CANCELLED
Arcata/Eureka, CA, Arcata, VOR/DME RWY 14, Orig
Atwater, CA, Castle, GPS RWY 13, Orig-A, CANCELLED
Atwater, CA, Castle, GPS RWY 31, Orig-A, CANCELLED
Merced, CA, Castle, ILS OR LOC/DME RWY 31, Amdt 2
Merced, CA, Castle, RNAV (GPS) RWY 13, Orig
Merced, CA, Castle, RNAV (GPS) RWY 31, Orig
Merced, CA, Castle, Takeoff Minimums and Obstacle DP, Amdt 1
Merced, CA, Castle, VOR/DME RWY 31, Amdt 1
San Diego, CA, Montgomery Field, ILS OR LOC/DME RWY 28R, Amdt 3
San Diego, CA, Montgomery Field, NDB OR GPS RWY 28R, Amdt 1C, CANCELLED
San Diego, CA, Montgomery Field, RNAV (GPS) RWY 28R, Orig
Santa Rosa, CA, Charles M. Schulz-Sonoma County, GPS RWY 14, Orig, CANCELLED
Santa Rosa, CA, Charles M. Schulz-Sonoma County, GPS RWY 32, Orig, CANCELLED
Santa Rosa, CA, Charles M. Schulz-Sonoma County, ILS OR LOC RWY 32, Amdt 17
Santa Rosa, CA, Charles M. Schulz-Sonoma County, RNAV (GPS) RWY 14, Orig
Santa Rosa, CA, Charles M. Schulz-Sonoma County, RNAV (GPS) RWY 32, Orig
Upland, CA, Cable, VOR RWY 6, Amdt 7A, CANCELLED
Upland, CA, Cable, VOR–A, Orig
Victorville, CA, Southern California Logistics, GPS RWY 17, Orig-B, CANCELLED
Victorville, CA, Southern California Logistics, ILS OR LOC RWY 17, Amdt 2
Victorville, CA, Southern California Logistics, RNAV (GPS) RWY 17, Orig
Victorville, CA, Southern California Logistics, VOR/DME RWY 17, Amdt 1
Watsonville, CA, Watsonville Muni, LOC RWY 2, Amdt 3
Keystone Heights, FL, Keystone Airpark, GPS RWY 4, Orig, CANCELLED
Keystone Heights, FL, Keystone Airpark, RNAV (GPS) RWY 5, Orig
Keystone Heights, FL, Keystone Airpark, Takeoff Minimums and Obstacle DP, Orig
Keystone Heights, FL, Keystone Airpark, VOR/DME RWY 5, Amdt 1
Orlando, FL, Orlando Sanford Intl, ILS OR LOC RWY 9R, Orig.
Lafayette, GA, Barwick Lafayette, RNAV (GPS) RWY 2, Amdt 1
Lafayette, GA, Barwick Lafayette, RNAV (GPS) RWY 20, Amdt 1
Lafayette, GA, Barwick Lafayette, Takeoff Minimums and Obstacle DP, Amdt 1
Toccoa, GA, Toccoa Rg Letourneau Field, VOR RWY 20, Amdt 13
Toccoa, GA, Toccoa Rg Letourneau Field, VOR/DME RWY 2, Amdt 2
Charles City, IA, Northeast Iowa Rgnl, GPS RWY 30, Orig, CANCELLED
Charles City, IA, Northeast Iowa Rgnl, RNAV (GPS) RWY 12, Orig

Charles City, IA, Northeast Iowa Rgnl, RNAV (GPS) RWY 30, Orig
Greensboro, NC, Piedmont Triad Intl, Takeoff Minimums and Obstacle DP, Orig
Roxboro, NC, Person County, RNAV (GPS) RWY 24, Orig
Washington, NC, Warren Field, RNAV (GPS) RWY 5, Amdt 1
Washington, NC, Warren Field, RNAV (GPS) RWY 17, Amdt 1
Washington, NC, Warren Field, RNAV (GPS) RWY 23, Amdt 1
Washington, NC, Warren Field, RNAV (GPS) RWY 35, Amdt 1
Broken Bow, NE, Broken Bow Muni, NDB RWY 14, Amdt 8, CANCELLED
Batavia, NY, Genesee County, ILS OR LOC RWY 28, Amdt 6
Batavia, NY, Genesee County, RNAV (GPS) RWY 28, Orig
Batavia, NY, Genesee County, VOR/DME–A, Amdt 5B
Cleveland, OH, Cleveland-Hopkins Intl, ILS PRM RWY 24R (Simultaneous Close Parallel), Orig
Cleveland, OH, Cleveland-Hopkins Intl, LDA/DME RWY 24L, Amdt 1
Cleveland, OH, Cleveland-Hopkins Intl, LDA PRM RWY 6R (Simultaneous Close Parallel), Amdt 1
Cleveland, OH, Cleveland-Hopkins Intl, LDA PRM RWY 24L (Simultaneous Close Parallel), Orig
Norman, OK, University of Oklahoma Westheimer, RNAV (GPS) RWY 3, Amdt 1
Oklahoma City, OK, Will Rogers World, RNAV (GPS) RWY 17R, Amdt 2A
Sparta, TN, Upper Cumberland Rgnl, RNAV (GPS) RWY 4, Orig
Sparta, TN, Upper Cumberland Rgnl, RNAV (GPS) RWY 22, Orig
Sparta, TN, Upper Cumberland Rgnl, Takeoff Minimums and Obstacle DP, Orig
Abilene, TX, Abilene Rgnl, RNAV (GPS) RWY 22, Orig
Abilene, TX, Abilene Rgnl, VOR RWY 22, Amdt 4
Childress, TX, Childress Muni, VOR RWY 35, Amdt 10
Midland, TX, Midland Intl, RNAV (GPS) RWY 10, Amdt 1
Midland, TX, Midland Intl, Takeoff Minimums and Obstacle DP, Orig
Port Aransas, TX, Mustang Beach, Takeoff Minimums and Obstacle DP, Amdt 1
Spearman, TX, Spearman Muni, RNAV (GPS) RWY 2, Orig
Spearman, TX, Spearman Muni, RNAV (GPS) RWY 20, Orig
Spearman, TX, Spearman Muni, Takeoff Minimums and Obstacle DP, Orig
Spearman, TX, Spearman Muni, VOR/DME RWY 2, Amdt 1
Victoria, TX, Victoria Rgnl, ILS OR LOC RWY 12L, Amdt 10
Victoria, TX, Victoria Rgnl, RNAV (GPS) RWY 12L, Orig
Victoria, TX, Victoria Rgnl, RNAV (GPS) RWY 30R, Orig
Victoria, TX, Victoria Rgnl, VOR RWY 12L, Amdt 16
Victoria, TX, Victoria Rgnl, VOR/DME RWY 30R, Amdt 6
Tangier, VA, Tangier Island, RNAV (GPS)–B, Orig
Tangier, VA, Tangier Island, Takeoff Minimums and Obstacle DP, Orig
Tangier, VA, Tangier Island, VOR/DME–A, Orig
Tangier, VA, Tangier Island, VOR/DME OR GPS RWY 2, Orig-C, CANCELLED

[FR Doc. E8–29006 Filed 12–9–08; 8:45 am]

BILLING CODE 4910–13–P

DEPARTMENT OF COMMERCE

International Trade Administration

19 CFR Part 351

RIN 0625–AA79

Withdrawal of the Regulatory Provisions Governing Targeted Dumping in Antidumping Duty Investigations

AGENCY: International Trade Administration, Import Administration.

ACTION: Interim final rule.

SUMMARY: Import Administration issues this interim final rule for the purpose of withdrawing the regulatory provisions governing the targeted dumping analysis in antidumping duty investigations.

DATES: This interim final rule is effective for all antidumping duty investigations initiated on or after December 10, 2008. Although the amendment made by this Interim Final Rule is effective on December 10, 2008, Import Administration seeks public comments. To be assured of consideration, written comments must be received not later than January 9, 2009.

ADDRESSES: Comments on this Interim Final Rule must be sent to David M. Spooner, Assistant Secretary for Import Administration, Central Records Unit, Room 1870, U.S. Department of Commerce, Pennsylvania Avenue.

FOR FURTHER INFORMATION CONTACT: Michael Rill, telephone 202–482–3058.

SUPPLEMENTARY INFORMATION: The Uruguay Round Agreements Act (''URAA''), enacted into law in 1994, changed the methodology used to determine whether a company is selling foreign merchandise into the United States at dumped prices in antidumping investigations. Prior to the URAA, the Department usually compared the six-month period of investigation average normal value to individual U.S. transaction prices to determine the margin of dumping (known as the average-to-transaction method). The URAA, however, directed the Department normally to calculate dumping margins by one of two methods: (1) By comparing weighted-average normal values to the weighted average of the export prices for comparable merchandise (known as the average-to-average method); or (2) by comparing the normal values of individual transactions to the export prices of individual transactions for comparable merchandise (known as the transaction-to-transaction method). *See* 19 U.S.C. 1677f–1(d)(1)(A). Congress, however, was aware that these methodologies could mask certain types of dumping. ''In such situations, the exporter may sell at a dumped price to particular customers or regions, while selling at higher prices to other customers or regions.'' *Uruguay Round Agreements Act, H.R. 103–826, Oct. 3, 1994, p. 98.*

To address this possibility, Congress enacted a statutory provision that allows an exception to the above two comparison methodologies. Specifically, when the Department finds that there is a pattern of export prices for comparable merchandise that differ significantly among purchasers, regions, or periods of time, and where such differences cannot be taken into account using one of the preferred methods referred to above, the Department could compare the weighted average of the normal values to the export price of individual transactions for comparable merchandise (i.e., average-to-transaction comparisons). *See* 19 U.S.C. 1677f–1(d)(1)(B).

Sections 19 CFR 351.414(f) and (g) of the Department's regulations establish certain criteria for analyzing allegations and making targeted dumping determinations in antidumping duty investigations. Section 19 CFR 351.301(d)(5) provides that an allegation of targeted dumping is due no later than 30 days before the scheduled date of the preliminary determination. The Department promulgated these provisions (*i.e.*, 19 CFR 351.414(f), (g), and 351.301(d)(5)) on May 19, 1997 (*Antidumping Duties; Countervailing Duties; Final Rule*, 62 FR 27296, 27374–76 (May 19, 1997)). At that time, the Department had never performed a targeted dumping analysis. Therefore, the provisions were promulgated without the benefit of any departmental experience on the issue of targeted dumping. Until recently, there have been very few allegations or findings of targeted dumping. This situation has caused the Department to question whether, in the absence of any practical experience, it established an appropriate balance of interests in the provisions. The Department believes that withdrawal of the provisions will provide the agency with an opportunity to analyze extensively the concept of targeted dumping and develop a meaningful practice in this area as it

gains experience in evaluating such allegations.

The Department may have established thresholds or other criteria that have prevented the use of this comparison methodology to unmask dumping, contrary to the Congressional intent. In that case, these provisions would act to deny relief to domestic industries suffering material injury from unfairly traded imports. Accordingly, immediate revocation of the provisions will facilitate the proper and efficient operation of the antidumping law.

The Department believes the withdrawal of this rule is not significant. Withdrawal will allow the Department to exercise the discretion intended by the statute and, thereby, develop a practice that will allow interested parties to pursue all statutory avenues of relief in this area.

The Department is not replacing these provisions with new provisions. Instead, the Department is returning to a case-by-case adjudication, until additional experience allows the Department to gain a greater understanding of the issue.

Parties are invited to comment on the Department's withdrawal of the regulatory provisions governing targeted dumping in antidumping duty investigations. Parties should submit to the address under the **ADDRESSES** heading a signed original and two copies of each set of comments including reasons for any recommendation, along with a cover letter identifying the commentator's name and address. To be assured of consideration, written comments must be received not later than January 9, 2009.

Classification

Executive Order 12866

It has been determined that this interim final rule is not significant for purposes of Executive Order 12866 of September 30, 1993 (''Regulatory Planning and Review'') (58 FR 51735 (October 4, 1993)).

Paperwork Reduction Act

This interim final rule contains no new collection of information subject to the Paperwork Reduction Act, 44 U.S.C. Chapter 35.

Executive Order 13132

This rule does not contain policies with federalism implications as that term is defined in section 1(a) of Executive Order 13132, dated August 4, 1999 (64 FR 43255 (August 10, 1999)).

Administrative Procedure Act

The Assistant Secretary for Import Administration finds good cause to waive the requirement to provide prior notice and opportunity for public comment, pursuant to the authority set forth at 5 U.S.C. § 553(b)(B), as such requirement is impracticable and contrary to the public interest. Courts have determined that notice and comment is impracticable when ''the agency could both follow section 553 and execute its statutory duties.'' *Lavesque* v. *Block,* 723 F.2d 175, 184 (5th Cir. 1980). It went further to clarify that the Administrative Procedure Act good cause waiver authorizes departures from the requirements ''only when compliance would interfere with the agency's ability to carry out its mission.'' *Riverbend Farms, Inc.* v. *Madigan,* 958 F.2d 1479, 1485 (9th Cir. 1992).

Here, under the Tariff Act of 1930, as amended, the Department may employ the average-to-transaction comparison method in an investigation if: (i) There is a pattern of export prices (or constructed export prices) for comparable merchandise that differ significantly among purchasers, regions, or periods of time, and (ii) the agency explains why such differences cannot be taken into account using one of the preferred methods. *See* 19 U.S.C. 1677f–1(d)(1)(B)(i) and (ii). Sections 19 CFR 351.414(f) and (g) of the Department's regulations establish certain criteria for analyzing targeted dumping allegations in antidumping investigations. These provisions were intended to clarify when the Department would use the average-to-transaction comparison method in antidumping duty investigations. As the provisions were promulgated without the benefit of any experience on the issue of targeted dumping, the Department may have established thresholds or other criteria that have prevented the use of this comparison methodology to unmask dumping. Likewise, 19 CFR 351.301(d)(5), the provision that establishes the deadline for submitting allegations, was promulgated without the benefit of any experience on the issue of targeted dumping. Consequentially, the Department may have established an impractical deadline for submitting such allegations. Given the above, sections 19 CFR 351.414(f), (g), and 351.301(d)(5) would act to deny relief to domestic industries suffering material injury from unfairly traded imports. This effect is contrary to the Department's intention in promulgating the provisions, and inconsistent with the Department's statutory mandate to provide relief to domestic industries materially injured by unfairly traded imports. Because the provisions are applicable to ongoing antidumping investigations, and because the application of the provisions can act to deny relief to domestic industries suffering material injury from unfairly traded imports, immediate revocation is necessary to ensure the proper and efficient operation of the antidumping law and to provide the relief intended by Congress.

The Assistant Secretary for Import Administration also finds good cause to waive the 30-day delay in effectiveness, pursuant to the authority set forth at 5 U.S.C. 553(e), for the reasons given above. Significantly, the Department may employ the average-to-transaction comparison method in an antidumping duty investigation if certain conditions are met. *See* 19 U.S.C. 1677f–1(d)(1)(B)(i) and (ii). Sections 19 CFR 351.414(f) and (g) of the Department's regulations may have established thresholds or other criteria that have prevented the use of this comparison methodology to unmask dumping, contrary to the Congressional intent. Likewise, the Department may have established an impractical deadline when it promulgated section 351.301(d)(5). Given that the provisions are applicable to ongoing antidumping investigations, and because the application of the provisions can act to deny relief to domestic industries suffering material injury from unfairly trade imports, immediate revocation is necessary to ensure the proper and efficient operation of the antidumping law and to provide the relief intended by Congress.

Regulatory Flexibility Act

Because a notice and an opportunity for public comment are not required to be given for this rule under the Administrative Procedure Act or by any other law, the analytical requirements of the Regulatory Flexibility Act (5 U.S.C. 601 *et seq.*) are not applicable. Therefore, a regulatory flexibility analysis has not been prepared.

List of Subjects in 19 CFR Part 351

Administrative practice and procedure, Antidumping duties, Business and industry, Cheese, Confidential business information, Investigations, Reporting and recordkeeping requirements.

■ For the reasons stated above, amend 19 CFR part 351 as follows:

PART 351—ANTIDUMPING AND COUNTERVAILING DUTIES

■ 1. The authority citation for part 351 continues to read as follows:

Authority: 5 U.S.C. 301; 19 U.S.C. 1202 note; 19 U.S.C. 1303 note; 19 U.S.C. 1671 *et seq.;* and 19 U.S.C. 3538.

§ 351.301. [Amended]

■ 2. Amend § 351.301 by removing and reserving paragraph (d)(5).

§ 351.414 [Amended]

■ 3. Amend § 351.414 by removing and reserving paragraphs (f) and (g).

Dated: November 24, 2008.

David M. Spooner,

Assistant Secretary for Import Administration.

[FR Doc. E8–29225 Filed 12–9–08; 8:45 am]

BILLING CODE 3510–DS–P

DEPARTMENT OF JUSTICE

28 CFR Part 28

RIN 1105–AB09; 1105–AB10; 1105–AB24

[OAG Docket Nos. 108, 109, 119; AG Order No. 3023–2008]

DNA-Sample Collection and Biological Evidence Preservation in the Federal Jurisdiction

AGENCY: Department of Justice.

ACTION: Final rule.

SUMMARY: The Department of Justice by this publication is amending regulations relating to DNA-sample collection in the federal jurisdiction. This rule generally directs federal agencies to collect DNA samples from individuals who are arrested, facing charges, or convicted, and from non-United States persons who are detained under the authority of the United States, subject to certain limitations and exceptions.

By this rule, the Department is also finalizing, without change, two related interim rules concerning the scope of qualifying federal offenses for purposes of DNA-sample collection and a requirement to preserve biological evidence in federal criminal cases in which defendants are under sentences of imprisonment.

DATES: *Effective Date:* This rule is effective January 9, 2009.

FOR FURTHER INFORMATION CONTACT: David J. Karp, Senior Counsel, Office of Legal Policy, Main Justice Building, 950 Pennsylvania Ave., NW., Washington, DC 20530. Telephone: (202) 514–3273.

SUPPLEMENTARY INFORMATION:

This final rule finalizes a proposed rule, DNA-Sample Collection Under the DNA Fingerprint Act of 2005 and the Adam Walsh Child Protection and Safety Act of 2006 (OAG 119; RIN 1105-AB24) (published April 18, 2008, at 73 FR 21083), which was designed to implement amendments made by section 1004 of the DNA Fingerprint Act of 2005, Public Law 109–162, and section 155 of the Adam Walsh Child Protection and Safety Act of 2006, Public Law 109–248, to section 3 of the DNA Analysis Backlog Elimination Act of 2000, Public Law 106–546. These regulatory provisions direct agencies of the United States that arrest or detain individuals, or that supervise individuals facing charges, to collect DNA samples from individuals who are arrested, facing charges, or convicted, and from non-United States persons who are detained under the authority of the United States. Unless otherwise directed by the Attorney General, the collection of DNA samples may be limited to individuals from whom an agency collects fingerprints. The Attorney General also may approve other limitations or exceptions. Agencies collecting DNA samples are directed to furnish the samples to the Federal Bureau of Investigation (''FBI''), or to other agencies or entities as authorized by the Attorney General, for purposes of analysis and entry into the Combined DNA Index System.

The final rule also finalizes two interim rules. The first interim rule, DNA Sample Collection From Federal Offenders Under the Justice for All Act of 2004 (OAG 108; RIN 1105-AB09) (published on January 31, 2005, at 70 FR 4763), implemented section 203(b) of the Justice for All Act of 2004, Public Law 108–405. That statutory provision expanded the class of offenses constituting qualifying federal offenses for purposes of DNA-sample collection to include all felonies (as well as certain misdemeanors), thereby permitting the collection of DNA samples from all convicted federal felons.

The second interim rule, Preservation of Biological Evidence Under 18 U.S.C. 3600A (OAG 109; RIN 1105-AB10) (published on April 28, 2005 at 70 FR 21951), implemented 18 U.S.C. 3600A. That statute requires the government to preserve biological evidence in federal criminal cases in which defendants are under sentences of imprisonment, subject to certain limitations and exceptions. Subsection (e) of the statute requires the Attorney General to promulgate regulations to implement and enforce the statute. The regulations issued for that purpose, which are finalized by this final rule, explain and interpret the evidence preservation requirement of 18 U.S.C. 3600A, and include provisions concerning sanctions for violations of that requirement.

Background

All 50 States authorize the collection and analysis of DNA samples from convicted state offenders, and enter resulting DNA profiles into the Combined DNA Index System (''CODIS''), which the FBI has established pursuant to 42 U.S.C. 14132. In addition to collecting DNA samples from convicted state offenders, several states authorize the collection of DNA samples from individuals they arrest.

This final rule addresses corresponding requirements and practices in the federal jurisdiction. The DNA Analysis Backlog Elimination Act of 2000 (the ''Act'') initially authorized DNA-sample collection by federal agencies only from persons convicted of certain ''qualifying'' federal, military, and District of Columbia offenses. Public Law 106–546 (2000). The Act also addressed the responsibility of the Federal Bureau of Prisons (''BOP'') and federal probation offices to collect DNA samples from convicted offenders in their custody or under their supervision, and the responsibility of the FBI to analyze and index DNA samples. On June 28, 2001, the Department of Justice published an interim rule, Regulations Under the DNA Analysis Backlog Elimination Act of 2000 (OAG 101I; RIN 1105–AA78), to implement these provisions. 66 FR 34363. The rule, in part, specified the qualifying federal offenses for which DNA samples could be collected and addressed responsibilities of BOP and the FBI under the Act.

After publication of the June 2001 interim rule, Congress enacted the USA PATRIOT Act, Public Law 107–56. Section 503 of that Act added three additional categories of qualifying federal offenses for purposes of DNA-sample collection: (1) Any offense listed in section 2332b(g)(5)(B) of title 18, United States Code; (2) any crime of violence (as defined in section 16 of title 18, United States Code); and (3) any attempt or conspiracy to commit any of the above offenses. The Department of Justice published a proposed rule, DNA Sampling of Federal Offenders Under the USA PATRIOT ACT of 2001 (OAG 105; RIN 1105–AA78) on March 11, 2003, to implement this expanded DNA-sample collection authority. 68 FR 11481. On December 29, 2003, the Department published a final rule, Regulations Under the DNA Analysis Backlog Elimination Act of 2000 (OAG 101; RIN 1105-AA78), implementing this authority. 68 FR 74855.

After publication of the December 2003 final rule, the DNA-sample collection categories again were expanded by section 203(b) of the Justice for All Act of 2004, Public Law 108–405. The Justice for All Act expanded the definition of qualifying federal offenses to include any felony, thereby permitting the collection of DNA samples from all convicted federal felons. The Department published an interim final rule, DNA Sample Collection From Federal Offenders Under the Justice for All Act of 2004 (OAG 108; RIN 1105–AB09), implementing this reform on January 31, 2005. 70 FR 4763.

The Department is now finalizing without change the January 2005 interim rule implementing section 203(b) of the Justice for All Act.[1] The regulatory provisions adopted by that interim rule will not have much practical significance following the publication and effectiveness of this final rule, because this final rule—pursuant to subsequently enacted legislative authority as discussed below—extends the authorization of DNA-sample collection to substantially all persons convicted of federal crimes (as well as certain non-convict classes). Sample collection accordingly will no longer be limited to persons convicted of offenses in the felony and specified misdemeanor categories constituting ''qualifying'' federal offenses under the Justice for All Act provisions. Nevertheless, it is appropriate to retain the regulatory provisions determining specifically which federal crimes constitute ''qualifying'' federal offenses, 28 CFR 28.1–.2, because the statute contemplates such determination by the Attorney General, and because those provisions continue to define the statutory minimum for DNA-sample collection from persons convicted of federal crimes, independent of the exercise of the Attorney General's authority under later enactments to expand the DNA-sample collection categories by regulation.

In addition to extending the category of federal convicts subject to DNA-sample collection to include all felons, the Justice for All Act of 2004 enacted a post-conviction DNA testing remedy for the federal jurisdiction, appearing in 18 U.S.C. 3600, and related biological evidence preservation requirements for federal criminal cases, appearing in 18 U.S.C. 3600A. Subsection (e) of 18 U.S.C. 3600A directs the Attorney General to issue regulations to implement and enforce that section. The Department carried out this statutory requirement by publishing an interim rule, Preservation of Biological Evidence Under 18 U.S.C. 3600A (OAG 109; RIN 1105–AB10), on April 28, 2005. 70 FR 21951. The regulatory provisions adopted by that interim rule appear in 28 CFR 28.21–.28. This final rule is adopting those regulatory provisions as final without change. The preamble to the April 2005 interim rule, appearing at 70 FR 21951–56, provides explanation concerning the regulatory provisions that continues to apply to those provisions as finalized by this rule.

Section 1004 of the DNA Fingerprint Act of 2005 (''DNA Fingerprint Act''), Public Law 109–162, broadened the categories of persons subject to DNA-sample collection to authorize such collection from ''individuals who are arrested or from non-United States persons who are detained under the authority of the United States.'' Before publication of a rule implementing this new authority, the DNA-sample collection provisions were amended further by section 155 of the Adam Walsh Child Protection and Safety Act of 2006 (''Adam Walsh Act''), Public Law 109–248. The amendments made by that Act left the statute in its current form: ''The Attorney General may, as prescribed by the Attorney General in regulation, collect DNA samples from individuals who are arrested, facing charges, or convicted or from non-United States persons who are detained under the authority of the United States.'' 42 U.S.C. 14135a(a)(1)(A). The statute also provides that the Attorney General may ''direct any other agency of the United States that arrests or detains individuals or supervises individuals facing charges to carry out any function and exercise any power of the Attorney General under this section.'' *Id*. The Department published a proposed rule, DNA-Sample Collection Under the DNA Fingerprint Act of 2005 and the Adam Walsh Child Protection and Safety Act of 2006 (OAG 119; RIN 1105-AB24) (April 18, 2008, at 73 FR 21083), to implement the DNA Fingerprint Act and Adam Walsh Act amendments and this rule also finalizes that April 2008 proposed rule.

Purposes

The purposes of the portions of this rule that finalize pre-existing interim rules are explained above and in the previously published preambles to those interim rules. The part of this rule that is new—expanding DNA-sample collection pursuant to the authority under 42 U.S.C. 14135a(a)(1)(A)—furthers important purposes reflecting the emergence of DNA identification technology and its uses in the criminal justice system.

DNA analysis provides a powerful tool for human identification. DNA samples collected from individuals or derived from crime scene evidence are analyzed to produce DNA profiles that are entered into CODIS. These DNA profiles, which embody information concerning 13 ''core loci,'' amount to ''genetic fingerprints'' that can be used to identify an individual uniquely, but do not disclose an individual's traits, disorders, or dispositions. *See United States* v. *Kincade*, 379 F.3d 813, 818–19 (9th Cir. 2004) (en banc); *Johnson* v. *Quander*, 440 F.3d 489, 498 (D.C. Cir. 2006). Hence, collection of DNA samples and entry of the resulting profiles into CODIS allow the government to ''ascertain[] and record[] the identity of a person.'' *Jones* v. *Murray*, 962 F.2d 302, 306 (4th Cir. 1992). The design and legal rules governing the operation of CODIS reflect the system's function as a tool for law enforcement identification, and do not allow DNA samples or profiles within the scope of the system to be used for unauthorized purposes. *See* 42 U.S.C. 14132, 14133(b)–(c), 14135e.

The practical uses of the DNA profiles (''genetic fingerprints'') in CODIS are similar in general character to those of actual fingerprints, but the collection of DNA from individuals in the justice system offers important information that is not captured by taking fingerprints alone. Positive biometric identification, whether by means of fingerprints or by means of DNA profiles, facilitates the solution of crimes through database searches that match crime scene evidence to the biometric information that has been collected from individuals. Solving crimes by this means furthers the fundamental objectives of the criminal justice system, helping to bring the guilty to justice and protect the innocent, who might otherwise be wrongly suspected or accused, through the prompt and certain identification of the actual perpetrators. DNA analysis offers a critical

[1] The preamble explanation in the interim rule implementing section 203(b) of the Justice for All Act, at 70 FR 4764–66, continues to apply to its regulatory provisions as finalized by this rule. However, the following errata should be noted: (1) the reference to ''28.2(a)(1)'' in the final sentence of the second full paragraph in the middle column on 70 FR 4765 should be to ''28.2(b)(1)''; (2) the references to ''(b)(3)(A)'' in the third and fifth sentences of the first paragraph and the second sentence of the second paragraph in the right column on 70 FR 4765 should be to ''(b)(3)(i)''; (3) the references to ''(b)(3)(B)'' in the first and third sentences of the first full paragraph of the left column on 70 FR 4766 should be to ''(b)(3)(ii)''; (4) the reference to ''(b)(3)(I)'' in the third sentence of the second full paragraph of the left column on 70 FR 4766 should be to ''(b)(3)(ix)''.

complement to fingerprint analysis in the many cases in which perpetrators of crimes leave no recoverable fingerprints but leave biological residues at the crime scene. Hence, there is a vast class of crimes that can be solved through DNA matching that could not be solved in any comparable manner (or could not be solved at all) if the biometric identification information collected from individuals were limited to fingerprints.

In addition, as with taking fingerprints, collecting DNA samples at the time of arrest or at another early stage in the criminal justice process can prevent and deter subsequent criminal conduct—a benefit that may be lost if law enforcement agencies wait until conviction to collect DNA. Indeed, recognition of the added value of early DNA-sample collection in solving and preventing murders, rapes, and other crimes was a specific motivation for the enactment of the legislation that this rule implements. *See* 151 Cong. Rec. S13756–58 (daily ed. Dec. 16, 2005) (remarks of Sen. Kyl, sponsor of the DNA Fingerprint Act) (explaining the value of including all arrestees in the DNA database). Moreover, in relation to aliens who are illegally present in the United States and detained pending removal, prompt DNA-sample collection could be essential to the detection and solution of crimes they may have committed or may commit in the United States. Since in most cases such aliens are not prosecuted for their immigration offenses, there is usually no later opportunity to collect a DNA sample premised on a criminal conviction. Hence, the individual's detention pending removal constitutes a unique opportunity to obtain this critical biometric information—and by that means to solve and hold the individual accountable for any crimes committed in the United States—before the individual's removal from the United States places him or her beyond the ready reach of the United States justice system.

As with fingerprints, the collection of DNA samples at or near the time of arrest also can serve purposes relating directly to the arrest and ensuing proceedings. For example, analysis and database matching of a DNA sample collected from an arrestee may show that the arrestee's DNA matches DNA found in crime scene evidence from a murder, rape, or other serious crime. Such information helps authorities to assess whether an individual may be released safely to the public pending trial and to establish appropriate conditions for his release, or to ensure proper security measures in case he is detained. It may help to detect violations of pretrial release conditions involving criminal conduct whose perpetrator can be identified through DNA matching and to deter such violations. The collection of a DNA sample may also provide an alternative means of directly ascertaining or verifying an arrestee's identity, where fingerprint records are unavailable, incomplete, or inconclusive. Hence, conducted incident to arrest, DNA-sample collection offers a legitimate means to obtain valuable information regarding the arrestee. *See Anderson* v. *Virginia*, 650 S.E.2d 702, 706 (Va. 2006) (upholding a state statute authorizing DNA-sample collection from arrestees based on ''the legitimate interest of the government in knowing for an absolute certainty the identity of the person arrested, in knowing whether he is wanted elsewhere, and in ensuring his identification in the event he flees prosecution'' (citation and quotation omitted)).

In sum, this rule implements new statutory authority that will further the government's legitimate interest in proper identification of persons ''lawfully confined to prison'' or ''arrested upon probable cause.'' *Jones*, 962 F.2d at 306. By expanding CODIS pursuant to statutory authority to include persons arrested, facing charges, or convicted, and non-United States persons detained, this rule will enhance the accuracy and efficacy of the United States criminal justice system.

Practical Implementation

The rule allows DNA samples generally to be collected, along with a subject's fingerprints, as part of the identification process. As discussed above, the uses of DNA for law enforcement identification purposes are similar in general character to the uses of fingerprints, and these uses will be greatly enhanced as a practical matter if DNA is collected regularly in addition to fingerprints. Law enforcement agencies routinely collect fingerprints from individuals whom they arrest. *See Anderson*, 650 S.E.2d at 706 (''Fingerprinting an arrested suspect has long been considered a part of the routine booking process.''); *Kincade*, 379 F.3d at 836 n.31 (''[E]veryday 'booking' procedures routinely require even the merely accused to provide fingerprint identification, regardless of whether investigation of the crime involves fingerprint evidence.'' (citation and quotation omitted)); *Jones*, 962 F.2d at 306 (noting ''universal approbation of 'booking' procedures * * * whether or not the proof of a particular suspect's crime will involve the use of fingerprint identification''). In addition, agencies that detain non-United States persons (i.e., persons who are not U.S. citizens or lawful permanent residents),[2] such as the Department of Homeland Security (''DHS''), often collect fingerprints from such individuals.

Accordingly, the Attorney General is directing all agencies of the United States that arrest or detain individuals or supervise individuals facing charges to collect DNA samples from individuals who are arrested, facing charges, or convicted, and from non-United States persons who are detained under the authority of the United States, pursuant to 42 U.S.C. 14135a(a)(1)(A), if the agencies take fingerprints from such individuals.

The Department recognizes, however, that there may be some circumstances in which agencies collect fingerprints but in which the collection of DNA samples would not be warranted or feasible. For example, in relation to non-arrestees, DHS will not be required to collect DNA samples from aliens who are fingerprinted in processing for lawful admission to the United States, or from aliens from whom DNA-sample collection is otherwise not feasible because of operational exigencies or resource limitations. If any agency believes that such circumstances exist within its sphere of operations, the agency should bring these circumstances to the attention of the Department, and exceptions to the DNA-sample collection requirement may be allowed with the approval of the Attorney General.

The Department also recognizes that some federal agencies exercising law enforcement authority do not collect fingerprints routinely from all individuals at a stage comparable to the arrest phase. For example, military personnel involved in court martial proceedings may not be fingerprinted because their fingerprints already are on file. In addition, persons facing federal charges in the District of Columbia may not be fingerprinted by any federal agency if they are fingerprinted by the Metropolitan Police Department. Nonetheless, the collection of DNA samples from such individuals serves

[2] Defining the scope of ''non-United States persons'' to mean persons who are not U.S. citizens or lawful permanent residents follows the common understanding of this term in other provisions of law. See, *e.g.*, 10 U.S.C. 2241 note, Public Law 108–7, div. M, § 111(e)(2)–(3), Feb. 20, 2003, 117 Stat. 536 (defining ''non-United States person'' as ''any person other than a United States person'' and ''United States person'' in the manner set forth in 50 U.S.C. 1801(i)); 50 U.S.C. 1801(i) (defining ''United States person,'' in relation to individuals, as ''a citizen of the United States * * * [or] an alien lawfully admitted for permanent residence'').

the same purposes, and is warranted to the same degree, as DNA-sample collection from other federal arrestees and defendants. Therefore, if directed by the Attorney General, certain agencies will be required to collect DNA samples from individuals from whom they would not otherwise collect fingerprints.

Agencies will be authorized to enter into agreements with other federal agencies, with state and local governments, and with private entities to carry out the required DNA-sample collection. Agencies that arrest, detain, or supervise individuals will not be required to duplicate DNA-sample collection if arrangements have been made to have the collection done by another authorized agency or entity, but will be responsible for ensuring that the DNA samples are collected and submitted for analysis and entry into CODIS. For example, an agency that arrests and fingerprints an individual and then transfers the individual to another agency (such as the United States Marshals Service) for detention cannot transfer responsibility for DNA-sample collection to the detention agency unless that agency agrees to assume responsibility for that function.

The Department of Justice understands that agencies will need to revise their current procedures in order to implement these new DNA-sample collection requirements. In addition, sample-collection kits will need to be distributed to the agencies and agency personnel will need to be trained in the proper collection techniques. Therefore, although the Attorney General is directing all agencies to implement DNA-sample collection by January 9, 2009, if sample-collection kits authorized by the Attorney General have not been made available to an agency in sufficient numbers to allow collection of DNA samples from all covered individuals, the Attorney General will grant an exception allowing the agency to limit its DNA-sample collection program to the extent necessary.

The collection of DNA samples by agencies will be performed in accordance with procedures and standards established by the Attorney General.

Under the pre-existing DNA-sample collection program for federal convicts, BOP and federal probation offices have taken blood samples for this purpose, utilizing sample-collection kits provided by the FBI. In earlier stages of the program, these samples generally were obtained through venipuncture (blood drawn from the arm), but currently the FBI provides kits that allow a blood sample to be collected by means of a finger prick. However, the states that collect DNA samples from arrestees typically do so by swabbing the inside of the person's mouth (''buccal swab''), and many states use the same method to collect DNA samples from convicts. Therefore, although even blood tests ''are a commonplace in these days of periodic physical examinations and experience with them teaches * * * that for most people the procedure involves virtually no risk, trauma, or pain,'' *Schmerber* v. *California*, 384 U.S. 757, 771 (1966) (footnote omitted), the rule permits and facilitates the use of buccal swabs to collect DNA samples.

Revisions to Existing Regulations

As set forth in the proposed rule, this final rule revises a section of the existing regulations, 28 CFR 28.12, to reflect the expansion of DNA-sample collection to include persons arrested, facing charges, or convicted, and non-United States persons detained under the authority of the United States.

Section 28.12, in paragraph (a), is revised to require BOP to collect DNA samples from all federal (including military) convicts in its custody, as well as from individuals convicted of qualifying District of Columbia offenses. The expansion of DNA-sample collection to include all federal or military convicts in BOP custody, whether or not they fall within the previously covered categories of persons convicted of qualifying federal or military offenses, is based on the Attorney General's authority under 42 U.S.C. 14135a(a)(1)(A). The requirement for BOP to collect samples from individuals convicted of qualifying District of Columbia offenses appears in 42 U.S.C. 14135b(a)(1).

A new paragraph (b) is inserted in section 28.12 to implement the new authority to collect DNA samples from federal arrestees, defendants, and detainees. As discussed above, agencies of the United States that arrest or detain individuals or supervise individuals facing charges will be required to collect DNA samples if they collect fingerprints from such individuals, subject to any limitations or exceptions the Attorney General may approve. This paragraph also specifies certain categories of aliens from whom DHS will not be required to collect DNA samples, even if DHS collects fingerprints. A new paragraph (c) is added that specifies a time frame for the implementation of the expanded DNA-sample collection program.

Current paragraph (c) is redesignated as paragraph (d) and is amended to reflect the expansion of the categories of individuals from whom DNA samples will be collected and the agencies that conduct DNA-sample collection. *See* 42 U.S.C. 14135a(a)(1)(A), 14135a(a)(4)(A). The current version of that paragraph refers only to the collection of DNA samples by BOP from persons convicted of qualifying offenses.

A new paragraph (e), replacing current paragraphs (b) and (d), provides in part that agencies required to collect DNA samples under the section may enter into agreements with other federal agencies, in addition to units of state or local governments or private entities, to carry out DNA-sample collection. The authority to make such arrangements with state and local governments and with private entities is explicit in 42 U.S.C. 14135a(a)(4)(B), and the Attorney General is delegating this authority to other federal agencies pursuant to 42 U.S.C. 14135a(a)(1)(A). The latter provision (42 U.S.C. 14135a(a)(1)(A)) also sufficiently supports allowing such arrangements between federal agencies, since it authorizes the Attorney General to delegate DNA-sample collection to any Department of Justice component and to any other federal agency that arrests or detains individuals or supervises individuals facing charges.

The new paragraph (e) also identifies three circumstances in which an agency need not collect a sample. The first is when arrangements have been made for some other agency or entity to collect the sample under that paragraph. The second is when CODIS already contains a DNA profile for the individual, an exception expressly authorized by 42 U.S.C. 14135a(a)(3). The third is when waiver of DNA-sample collection in favor of collection by another agency is authorized by 42 U.S.C. 14135a(a)(3) or 10 U.S.C. 1565(a)(2), statutes that provide that BOP and the Department of Defense need not duplicate DNA-sample collection with respect to military offenders.

Current paragraph (e) is redesignated as paragraph (f) and is amended to require agencies subject to the rule to carry out DNA-sample collection utilizing buccal-swab collection kits provided by the Attorney General or other means authorized by the Attorney General. The samples then must be sent to the FBI, or to another agency or entity authorized by the Attorney General, for purposes of analysis and indexing in CODIS. This paragraph also is amended to require taking of another sample if the original sample is flawed and hence cannot be analyzed to derive a DNA profile that satisfies the requirements for entry into CODIS.

A new paragraph (g) is added to clarify that the authorization of DNA-sample collection under this rule

pursuant to the DNA Analysis Backlog Elimination Act does not limit DNA-sample collection by an agency pursuant to any other authority.

Summary of Comments

The Department received comments from members of the public and interested organizations concerning the two interim rules and the proposed rule that are being finalized by this rule. The comments received on the interim rule concerning biological evidence preservation, published at 70 FR 21951, will be summarized first. Following that, the comments received on the interim and proposed rules concerning the expansion of DNA-sample collection in the federal jurisdiction, published at 70 FR 4763 and 73 FR 21083, will be summarized jointly because the number of comments received on the earlier (interim) rule was relatively small and those comments generally overlapped in substance with the comments received on the later proposed rule.

Comments on the Interim Rule, Preservation of Biological Evidence Under 18 U.S.C. 3600A (OAG 109; RIN 1105–AB10)

This interim rule implemented the biological evidence preservation requirements of 18 U.S.C. 3600A. *See* 70 FR 21951.

One commenter proposed that this rule should be changed to stipulate that federal agencies cannot maintain or transfer biological evidence to other federal agencies unless existing privacy protections are maintained, and that access to biological material whose preservation is required by 18 U.S.C. 3600A should be limited to federal criminal justice agencies for purposes of post-conviction DNA testing to determine if a convict is actually innocent or identification of additional perpetrators where there is evidence of the existence of such persons.

The rule has not been changed on the basis of this comment because nothing in section 3600A or its implementing rule purports to repeal or limit any existing privacy protections, because there is no reason to discern any greater likelihood of misuse of biological evidence retained pursuant to section 3600A's requirements than of misuse of biological evidence that would be retained otherwise, because addition of such restrictions is not necessary to carry out the statutory directive to implement and enforce section 3600A, and because there is no apparent legal authority for the Department to prescribe such rules for federal agencies on a government-wide basis. Moreover, the policies reflected in the changes proposed by the commenter are too restrictive, because they could preclude using retained biological evidence for legitimate purposes, such as to establish guilt in a new trial if the offender's original conviction is reversed.

Another commenter expressed concern about the rule's provision in 28 CFR 28.22(b)(3) that section 3600A's biological evidence preservation requirement ceases to apply when a defendant is released under supervision following imprisonment. However, this limitation of scope is explicit in the statute, which requires preservation of biological evidence only in relation to a defendant who is ''under a sentence of imprisonment.'' 18 U.S.C. 3600A(a); *see* 70 FR 21952 (explaining in preamble to interim rule that this statutory language does not cover convicts released under supervision).

The same commenter also expressed concern about 28 CFR 28.23, which provides that the evidence that must be retained is limited to sexual assault forensic examination kits and semen, blood, saliva, hair, skin tissue, or other identified biological material. The specific concern expressed was that evidence not found to contain biological material might be found to contain such material on reanalysis at some later time. However, the requirement as stated in the regulation tracks the statutory requirement in section 3600A(a). The statute does not require retention of evidence in which biological material has not been identified based on the speculative possibility that re-examination at some future time might identify such material and the rule would not accurately reflect the statute if it so provided.

Another commenter expressed support for the rule, stating that the biological evidence preservation requirement would help to prove without dispute the guilt or innocence of persons convicted of crimes, and did not propose any changes.

Comments on the Interim Rule, DNA Sample Collection From Federal Offenders Under the Justice for All Act of 2004 (OAG 108; RIN 1105–AB09), and on the Proposed Rule, DNA-Sample Collection Under the DNA Fingerprint Act of 2005 and the Adam Walsh Child Protection and Safety Act of 2006 (OAG 119; RIN 1105–AB24)

Comments were received on the interim rule (published at 70 FR 4763) implementing the Justice for All Act's expansion of DNA-sample collection from federal convicts to include all felons, and the proposed rule (published at 73 FR 21083) expanding DNA-sample collection in the federal jurisdiction to include certain non-convict classes, including arrestees and non-U.S. person detainees as specified. The ensuing discussion summarizes the principal issues that were raised in comments received from various individuals or organizations, followed by a summary of comments received from some particular commenters that merit separate mention or discussion. The main matters raised in the comments are as follows:

Scope of Sample Collection

Some commenters objected to the scope of DNA-sample collection under the rule, such as by stating that DNA-sample collection should not be extended beyond convicts to arrestees, or that DNA-sample collection should be limited to individuals convicted of or implicated in particularly serious or violent crimes. Other commenters agreed with the approach of the rule, noting the public safety benefits of collecting DNA samples on a broader basis.

The rule has not been changed on the basis of comments in this category. Extending DNA-sample collection beyond convicts to other persons implicated in illegal activity is the central reform of the DNA Fingerprint Act that this rule implements. This extension generally brings DNA-sample collection into conformity with the practice regarding fingerprints, which are collected as part of routine booking procedure in connection with arrests, and it offers critical benefits that would be lost if DNA-sample collection were authorized only if and when an arrested person is convicted. The matter is further discussed above in connection with the purposes and practical implementation of this rule.

Some of the comments on this point objected to the extension of DNA-sample collection to arrestees on the ground that it would violate the presumption of innocence or result in innocent persons being included in the DNA database. This objection is essentially question-begging, presupposing that DNA-sample collection from an individual is not justifiable unless there has been an adjudication establishing the individual's commission of a criminal offense. That is not the rationale of DNA-sample collection under this rule and the legislative enactments it implements. Rather, the rule reflects a judgment that the implication of individuals in criminal activity to the extent of being arrested sufficiently supports the taking of certain identification information from such individuals. The same judgment is made

without difficulty with respect to other forms of biometric identification, including fingerprinting and photographing of arrestees, and the corresponding judgment is sound with respect to DNA identification information.

Some commenters believed that the rule's expansion of DNA-sample collection would adversely affect innocent persons in a different way, by supposedly increasing the risk of spurious matches resulting from an enlarged DNA database. The premise of this objection is mistaken. The technical design of the DNA identification system, including the number and selection of the core loci used in DNA identification, is sufficiently discriminating to foreclose a significant risk of coincidental matching of DNA profiles between different individuals that could result in an innocent person being mistakenly implicated in a crime he did not commit. Increasing the number of DNA profiles in CODIS accordingly does not create a risk to the innocent of the sort that concerns these commenters, just as the increase in the number of fingerprints in criminal justice databases does not create a significant risk of innocent persons being implicated in crimes because of coincidental congruences between their fingerprints and those of offenders.

Some commenters objected that extending DNA-sample collection to arrestees would disproportionally impact certain racial or ethnic groups. However, the rule is race-neutral, providing for the collection of DNA samples from arrestees on an evenhanded basis, regardless of their racial or ethnic background. The demographic proportions in the class of individuals from whom DNA samples are taken upon arrest will parallel the representation of different demographic groups in the general class of arrestees, just as the demographic proportions in the class of individuals from whom fingerprints are taken upon arrest parallels the representation of different demographic groups in the general class of arrestees. The resulting proportions in either case provide no reason to refrain from taking biometric information from arrestees, whose use for law enforcement identification purposes will help to protect individuals in all racial, ethnic, and other demographic groups from criminal victimization.

As noted above, some commenters opined that DNA-sample collection should be limited to cases involving individuals implicated in particularly serious or violent crimes. The uses of DNA identification include solving the most serious crimes, such as rape and murder, but also legitimately include solving other types of crimes in which the perpetrators leave identifiable biological residues at the crime scenes from which DNA can be recovered. Moreover, even if only the objectives of solving and preventing the most serious crimes were considered, the scope of sample collection provided in this rule would be justified, because the efficacy of the DNA identification system in solving such crimes depends in large measure on casting a broader net in sample collection. The issue of the scope of predicate offenses was before Congress during the consideration of the enactments that this rule implements and the legislative decision was against imposing any such limitation:

> [T]he Committee has made the salutary reforms * * * that expand the collection and indexing of DNA samples and information generally applicable, and has not confined the application of these reforms to cases involving violent felonies or some other limited class of offenses. The experience with DNA identification over the past fifteen years has provided overwhelming evidence that the efficacy of the DNA identification system in solving serious crimes depends upon casting a broader DNA sample collection net to produce well-populated DNA databases. For example, the DNA profile which solves a rape through database matching very frequently was not collected from the perpetrator based upon his prior conviction for a violent crime, but rather based upon his commission of some property offense that was not intrinsically violent. As a result of this experience, a great majority of the States, as well as the Federal jurisdiction, have adopted authorizations in recent years to collect DNA samples from all convicted felons—and in some cases additional misdemeanant categories as well—without limitation to violent offenses. * * * The principle is equally applicable to the collection of DNA samples from non-convicts, such as arrestees. By rejecting any limitation of the proposed reforms to cases involving violent felonies or other limited classes, the Committee has soundly maximized their value in solving rapes, murders, and other serious crimes.

151 Cong. Rec. S13758 (daily ed. Dec. 16, 2005) (remarks of Sen. Kyl, sponsor of the DNA Fingerprint Act, quoting the Justice Department's statement of views).

Finally, some commenters objected that the rule would result in the collection of DNA samples from persons arrested in the course of demonstrations or protests. However, the rule involves no targeting of anyone based on expressive activities or other constitutionally protected conduct. It is a neutral provision for the collection of an additional type of biometric information from arrestees, regardless of the context in which they are arrested. Persons arrested for criminal activities occurring in the context of demonstrations are subject to the normal incidents of arrest, including fingerprinting and photographing. There is no reason DNA-sample collection should be treated differently.

Constitutionality

Some commenters alleged that DNA-sample collection as authorized by the rule would violate the Fourth Amendment's prohibition of unreasonable searches and seizures or other constitutional provisions. Other commenters believed that the rule's requirements are consistent with the Constitution.

The constitutionality of collecting DNA samples from convicts on a categorical basis has been considered by numerous federal and state courts, which have reached the substantially unanimous conclusion that such collection is constitutional. With respect to the broader collection of DNA samples from arrestees, defendants, and non-U.S. person detainees as authorized by this rule, the Department of Justice has carefully considered the issue and has concluded that the rule fully comports with constitutional requirements. A number of the considerations supporting this conclusion are discussed above in the explanation of the purposes and practical implementation of this rule.

Privacy

Some commenters objected to the rule on the ground that DNA, in contrast to fingerprints, can potentially be used to derive sensitive information about individuals, such as information about genetic disorders, dispositions to medical conditions, and possibly behavioral predispositions. Some stated that this concern is aggravated by the retention of the DNA samples themselves (buccal swabs or blood samples) after the samples have been analyzed to derive the DNA profiles that are entered into CODIS.

The rule has not been changed on the basis of these comments because the concerns they raise were recognized, and these concerns were fully considered and addressed, in the design of the DNA identification system and the legal and administrative rules governing the system's operation. As discussed above in connection with the purposes of this rule, the DNA profiles retained in the system are sanitized ''genetic fingerprints'' that can be used to identify an individual uniquely, but do not disclose an individual's traits, disorders, or dispositions. The rules

governing the operation of CODIS reflect its function as a tool for law enforcement identification, and do not allow DNA information within the scope of the system to be used to derive information concerning sensitive genetic matters. *See* 42 U.S.C. 14132(b), 14133(b)–(c), 14135e.

The retention of DNA samples after DNA profiles have been derived does not compromise these protective measures, because the DNA samples are maintained in secure storage and are subject to essentially the same use restrictions and privacy protections as DNA profiles. *See* 42 U.S.C. 14132(b)(3), 14133(c)(2), 14135e. Moreover, retention of the samples has neither the purpose nor the effect of jeopardizing the privacy of individuals from whom the samples have been collected, but rather serves to protect valid individual and systemic interests. For example, in cases in which a search against CODIS obtains an apparent match between an individual's DNA profile in the system and the DNA of the perpetrator of a crime derived from crime scene evidence, the original sample taken from the individual is reanalyzed to ensure that the profile in the system is actually that of the identified individual before the match information is disclosed to investigators. This measure, which functions as a backstop protection to ensure that innocent persons are not mistakenly suspected or accused, could not be carried out if the DNA samples were destroyed.

Finally, some commenters objected to the retention of the DNA samples collected under the rule on the view that such retention could lead to ''familial searching.'' By ''familial searching'' the commenters apparently mean searches directed at finding DNA profiles in a database that do not match to the DNA found in crime scene evidence, but are sufficiently close (''partial matches'') to create a probability that the perpetrator is a relative of an identifiable individual in the DNA database. The current design of the DNA identification system does not encompass searches of this type against the national DNA index. Occasionally partial matches appear incidentally as a result of ordinary searches seeking exact matches, and in such cases the partial match information may be shared with investigators, for use as an investigative lead.

This rule makes no change in policies or practices relating to partial matches or searches therefor, nor does the concern raised by these commenters have any obvious relationship to the matters addressed in the rule. The question whether or to what extent partial match information may be sought or used is independent of the question whether DNA samples are to be collected only from convicts or from persons in certain non-convict classes as well. It is also independent of policy decisions regarding the retention or disposal of DNA samples. The concern raised by these commenters concerning the possibility of ''familial searching'' accordingly provides no logical basis for changing this rule.

Impact on Aliens

Some commenters objected to the rule insofar as it would result in the collection of DNA samples from non-U.S. persons arrested or detained for immigration law violations, and proposed various limitations to curtail or exclude such sample collection. Other commenters supported the application of the rule to collect DNA samples in these circumstances.

One concern raised by commenters critical of the rule was that collecting DNA samples from non-U.S. persons who are arrested or detained would result in resentment in immigrant communities. However, persons who are illegally present in the United States are subject to arrest or detention and removal from the country. When such persons are arrested or detained pending removal they are subject to the normal incidents of being taken into custody, including fingerprinting. The rule would only add the collection of another type of biometric information to the process, normally by taking a buccal swab. Some degree of resentment at the enforcement of the nation's immigration laws may be an unavoidable consequence of the removal from the United States of individuals illegally present, with whom others in immigrant communities may identify based on common origin or background. A minor addition to the associated booking procedure in connection with removal, as provided in this rule, should not change the situation materially. Moreover, even if some additional resentment concerning the enforcement of the immigration laws were to result, it would not be sufficient reason to refrain from implementing an advance in law enforcement identification methods that offers important benefits in increased safety against criminal victimization to all elements of the national community, including immigrant communities.

Some comments critical of the rule's reforms suggested a general exclusion of immigration violations as a basis for DNA-sample collection under the rule. However, the statute (42 U.S.C. 14135a(a)(1)(A)) permits DNA-sample collection from arrestees with no restriction, and authorizes DNA-sample collection from non-U.S. persons more broadly, allowing DNA samples to be collected from such persons on the basis of detention (even if they are not arrested). Generally excluding aliens apprehended for immigration violations from DNA-sample collection would create an arbitrary difference between such persons and persons arrested for non-immigration federal offenses, and would virtually nullify the broader statutory authorization to collect DNA samples from non-U.S. person detainees, since immigration law violations are the typical reason non-U.S. persons may be detained (beyond ordinary arrest situations for other sorts of crimes). There is no justification for such restriction in the statutory text, on the basis of legislative intent, or on grounds of policy. *See generally* 151 Cong. Rec. S13757 (daily ed. Dec. 16, 2005) (remarks of Sen. Kyl) (noting breadth of authorization to collect DNA samples in immigration contexts under DNA Fingerprint Act).

Some commenters urged more specifically that collection of DNA samples from non-U.S. persons based on detention should be stringently limited, such as by limiting such collection to aliens held under final orders of removal. For the reasons discussed below, the Department has not made such a change in the final rule.

A ground offered by the commenters in support of such restriction is that persons who are citizens or lawful permanent residents may be mistakenly identified as non-U.S. persons and subjected to removal proceedings. In rare cases, a person born abroad may be able to establish derivative U.S. citizenship based upon the naturalization of one or both of the person's parents while he or she was a minor. It is also true that a small number of lawful permanent resident aliens are placed in removal proceedings, for example, based on their having committed certain types of crimes or on their engaging in such conduct as alien smuggling or immigration fraud. Such aliens retain their permanent resident status—and hence remain U.S. persons—until the issuance of a final removal order. 8 CFR 1.1(p).

While the statute limits the authority to collect DNA samples from detainees (not arrested, facing charges, or convicted) to non-U.S. persons, it does not prescribe a particular quantum of proof or any adjudicatory process to establish non-U.S. person status. Even the proposal of some commenters to limit DNA-sample collection to aliens

held under final orders of removal could not definitively preclude all mistakes, given the possibility that some such orders reflect errors of law or fact. The Department of Homeland Security or any other agency detaining persons for immigration violations will be able to consider whether there is any available information tending to indicate that a detainee is a lawful permanent resident or a U.S. citizen. While lawful permanent residents who are detained pending removal proceedings are not subject to DNA-sample collection based on non-U.S. person status before their permanent resident status is terminated at the conclusion of the removal proceedings, that is not a reason to defer collection of DNA samples from the vast majority of detained aliens who are not permanent resident aliens.

In interpreting the statutory authorization to collect DNA samples from non-U.S. person detainees, it is most plausibly understood in parity with the earlier part of the statutory provision, which permits DNA-sample collection from arrestees. The purpose of the authorization relating to arrestees is to extend DNA-sample collection beyond persons whose commission of crimes has been established by the relevant adjudicatory process (criminal conviction). Rather, the quantum of information sufficient to warrant an arrest—probable cause that the individual has committed a crime—is deemed a sufficient basis for the collection of certain biometric information, including DNA. Similarly, under the later portion of the statutory provision concerning non-U.S. person detainees, the quantum of information sufficient to warrant the detention of an individual based on indicia of the individual's being a non-U.S. person subject to removal is a sufficient basis for the collection of such information.

Considering the matter at a practical level, the largest class of persons who may be affected by the rule are aliens apprehended near the southwest border who have entered the country illegally. In most cases such aliens do not dispute their status or the illegality of their presence in the United States, and accept prompt repatriation following brief detention without further proceedings. Hence, radically limiting the application of the statute's DNA-sample collection authorization for non-U.S. person detainees—for example, limiting it to aliens held under final orders of removal—would exclude most individuals to whom it was meant to apply.

A further relevant consideration is that aliens who are apprehended following illegal entry have likely committed crimes under the immigration laws for which they could be arrested. *See, e.g.*, 8 U.S.C. 1325(a), 1326. Most accept prompt repatriation and are not prosecuted, but a substantial number are prosecuted. Whether prosecution will be pursued is a matter of executive discretion, and the decision about that may not occur until some time after the alien's apprehension. Hence, whether an alien in such circumstances is regarded as an arrestee or a (non-arrested) detainee may be a matter of characterization, and the aptness of one description or the other may shift over time, depending on the disposition or decision of prosecutors concerning the handling of the case. There would be little sense in an understanding of the statute as limiting DNA-sample collection from individuals as non-U.S. person detainees to circumstances in which their non-U.S. person status has, for example, been finally established through an immigration adjudication, where the statute would clearly allow DNA-sample collection from the same individuals under far less stringent requirements as persons arrested on probable cause for immigration law violations.

Finally, some commenters criticized the rule as requiring the collection of DNA samples from lawful immigrants seeking admission to the country. This comment is simply wrong. The rule provides an express exception to the collection requirement under section 28.12(b)(1) for ''[a]liens lawfully in, or being processed for lawful admission to, the United States.''

Backlogs

Some commenters expressed the concern that the rule would increase backlogs of unanalyzed DNA samples. However, the Department of Justice is fully aware of the increased demand for DNA analysis that will result, and the Department has requested additional resources for the FBI Laboratory to increase analysis capacity in order to address the larger volume of samples that will be collected and will need to be analyzed. Moreover, even if backlogs are temporarily increased, the collected samples will be stored until they can be analyzed, and the DNA profiles ultimately derived thereby will be useful in solving crimes whenever they become available and are entered into CODIS. The concern expressed by some of these commenters that having a larger number of stored samples could hinder criminal investigations is also not well-founded. The existence of samples in storage does not impair the operation of CODIS with respect to DNA profiles that have already been entered into the system. Analysis of DNA samples collected from individuals can be prioritized in cases in which the circumstances suggest a particular probability that matches to DNA in crime scene evidence from other offenses will result, regardless of the number of stored samples awaiting analysis.

Use of Contractors

Some commenters asserted that the rule contemplates federal agencies contracting with third parties to collect and store DNA samples, which they believed would lead to abuse. The reference may be to section 28.12(e), which states that agencies required to collect DNA samples under the rule may enter into agreements with other federal agencies, ''with units of state or local governments, and with private entities to carry out the collection of DNA samples.'' However, the quoted language in the rule tracks statutory language that authorizes such agreements. *See* 42 U.S.C. 14135a(a)(4)(B) (authorizing agencies to ''enter into agreements with units of State or local government or with private entities to provide for the collection of [DNA] samples''). For example, under this language, federal probation offices have been permitted to contract with medical personnel to carry out DNA-sample collection, in the form of blood-sample collection, from offenders under their supervision. The use of contract personnel does not waive or modify the privacy and security requirements of the DNA identification system and the authorization for this purpose in the rule contemplates nothing essentially different from what has previously been allowed (and continues to be allowed) under the statutory provisions. There is no basis for some commenters' apparent perception of this aspect of the rule as a novel measure entailing some grave risk of abuse.

Likewise, there is no force to an objection raised by some commenters that the rule does not prohibit outsourcing of DNA samples collected under the rule to private laboratories for analysis. The Department of Justice is moving to increase the FBI Laboratory's capacity for DNA analysis to address the expected increase in DNA analysis workload resulting from this rule. If there is also use of private laboratories to carry out some of the required DNA analysis, it is no cause for concern. Outsourcing of DNA analysis to private laboratories has widely been used for many years in analyzing DNA samples collected from individuals, including as

part of the federal DNA analysis backlog elimination funding program administered by the Department's National Institute of Justice. Where private laboratories carry out such analysis, they are subject to the stringent quality assurance and proficiency requirements and standards that laboratories deriving DNA profiles for entry into CODIS must meet, and to the privacy and security requirements associated with CODIS. Nothing in this rule would modify or weaken these protections, if it were decided to outsource some DNA samples collected under the rule for analysis by private laboratories.

Expungement

Some commenters stated that the rule should be modified to provide for expungement of DNA information in certain circumstances, such as cases in which an arrestee from whom a DNA sample was collected is acquitted. The rule has not been modified to incorporate expungement provisions because expungement is provided for and governed by statutory provisions appearing in 42 U.S.C. 14132(d). Under the applicable statutory expungement procedure, the FBI expunges from the national DNA index the DNA information of a person included in the index on the basis of conviction for a qualifying federal offense if the FBI receives a certified copy of a final court order establishing that the conviction has been overturned. Likewise, the FBI expunges the DNA information of a person included in the index on the basis of an arrest under federal authority if it receives a certified copy of a final court order establishing that the charge has been dismissed or has resulted in an acquittal or that no charge was filed within the applicable time period. *See* 42 U.S.C. 14132(d)(1)(A). By December 31, 2008, the FBI will publish instructions on its Web site describing the process by which an individual may seek expungement of his or her DNA records in accordance with 42 U.S.C. 14132(d)(1)(A).

Use of Reasonably Necessary Means

Some commenters objected to the authorization in section 28.12(d) for agencies to use reasonably necessary means to collect DNA samples from individuals covered by the rule who refuse to cooperate in the collection of the sample. This regulatory provision is based on the statutory authorization to use such reasonable means appearing in 42 U.S.C. 14135a(a)(4)(A). The comments on this point did not provide persuasive reasons to refrain from paralleling the statutory authorization in the regulation.

Granting of Exceptions

Some comments criticized the rule as not sufficiently specifying the circumstances in which the Attorney General will allow exceptions to the rule's DNA-sample collection requirement. The rule has not been changed on this point. The preamble discussion in this rule above adequately explains why some authority to allow exceptions is necessary, and the types of grounds (such as operational exigencies or resource constraints) on which exceptions may be permitted.

Comments From Senator Jon Kyl

Senator Jon Kyl, the legislative author of the DNA Fingerprint Act and the related Adam Walsh Act amendment, submitted comments stating that the rule properly implements the authority created by these laws. He stated that he did not recommend any change in the regulations because they are consistent with the clear meaning and spirit of the statutory authorization.

Senator Kyl responded in his comments to the privacy concerns raised by other commenters. This included providing detailed explanation why it would be practically impossible to divert the relevant DNA analysis laboratory processes for preparation of CODIS DNA profiles so as to extract and misuse genetically sensitive information. Finally, Senator Kyl responded to and rejected a range of comments and proposed changes in the rule that had been submitted by other commenters who were critical of the rule.

Comments From the Administrative Office of the United States Courts

Comments were submitted by the Administrative Office of the United States Courts asking that the Department consider modifying the rule to specify that covered ''agenc[ies] of the United States'' that will be required to collect DNA samples include only executive branch agencies. The rule has not been so changed because the suggested change would be an incorrect reading of the law. The federal probation offices have been responsible for collecting DNA samples from convicts under their supervision, as provided in 42 U.S.C. 14135a(a)(2). Against this background, it is not plausible that they were meant to play no corresponding role under the enactment expanding DNA-sample collection in the federal jurisdiction to certain non-convict classes. The laws relating to pretrial release in federal cases were amended by the DNA Fingerprint Act to make it a mandatory condition of pretrial release that a defendant cooperate in required DNA-sample collection. *See* 18 U.S.C. 3142(b), (c)(1)(A). This heightens the implausibility of an assumption that the federal probation and pretrial services offices were not meant to have any responsibility with respect to DNA-sample collection, which is a mandatory pretrial release condition. The expanded DNA-sample collection authorization in 42 U.S.C. 14135a(a)(1)(A) states that the Attorney General may ''authorize and direct any other agency of the United States that * * * supervises individuals facing charges'' to carry out the DNA-sample collection function. There is no plausibility to a reading of this statutory language as intended to exclude almost all of the federal agencies (the federal probation and pretrial services offices) that supervise individuals facing federal charges.

The comments of the Administrative Office of the U.S. Courts also suggested that the rule be modified to include procedures by which probation officers will be notified when a DNA sample has been collected by some other agency, so as to avoid duplicative sample collection. Other commenters in some instances similarly suggested that the rule specify procedures or mechanisms to avoid duplicative collection by multiple agencies. The Department of Justice intends to establish such mechanisms, but their design and operation can most readily be worked out in the implementation of this rule in cooperation with the affected agencies. Consequently, the rule has not been modified on this point.

Comments From the National Congress of American Indians

Comments received from the National Congress of American Indians expressed concern about the lack of consultation with tribal officials regarding the proposed rule. The comments noted that federal jurisdiction exists to prosecute major crimes committed in Indian country, and recommended that the applicability of the rule be contingent on the assent of particular tribes. Various other restrictions were also recommended similar to those proposed by other commenters critical of the rule, such as limiting DNA-sample collection to convicts, and requiring the destruction of DNA samples after the DNA profiles have been derived and entered into CODIS. The underlying concern reflected in these comments was that collected samples would be misused to derive sensitive genetic information and not properly limited to legitimate law enforcement purposes.

The Department of Justice is aware of the concerns regarding the obtaining of sensitive genetic information concerning Native Americans and misuse of such information. But these concerns are misplaced in relation to this rule, under which collected DNA samples and resulting DNA profiles are subject to the stringent privacy protections of CODIS, reinforced and secured through numerous design elements and governing laws and rules that limit the use of DNA information to proper law enforcement identification purposes. These matters are discussed and documented at length in earlier portions of this preamble and summary. Hence, limiting the application of the rule in relation to crimes committed in Indian country or through other restrictions would not further any purpose of protecting the privacy of Native Americans. Rather, it would only serve to limit the strength and efficacy of the DNA identification system in protecting all elements of the American public, including Native American communities, from rape, murder, and other crimes.

Comments From the New Hampshire Department of Safety

Comments submitted by the New Hampshire Department of Safety urged that the rule be modified to create an exception to DNA-sample collection based on detention for minor, nonviolent offenses, or that resulting DNA profiles in such cases not be entered into CODIS until after conviction. The comments stated that members of the New Hampshire Legislature had advised that there would be a move to prohibit New Hampshire from participating in CODIS if the rule were not restricted.

The preamble of this rule above explains the basis for the conclusion that collecting DNA samples from federal arrestees on the same footing as fingerprints is the approach most conducive to public safety and is not overly broad. Moreover, this rule affects only DNA-sample collection in the federal jurisdiction. It imposes nothing on New Hampshire or other states, which remain free to set their own DNA-sample collection policies. Withdrawal from CODIS by a state would harm its own people, denying them the benefits of the nationwide DNA identification system that has come to play a critical role in protecting the public from crime.

Comments From a Canadian Member of Parliament

A member of the Canadian Parliament submitted comments expressing concern about the rule, in relation to possible DNA-sample collection from Canadians lawfully visiting the United States. The comments appear to reflect misunderstandings concerning the provisions and intent of the rule. One limitation of the rule is that it generally equates the requirements for DNA-sample collection to those for fingerprinting. Hence, to the extent that Canadian visitors to the United States are exempt from fingerprinting, they would also be exempt from the DNA-sample collection requirement prescribed by the rule. More basically, the rule has an express exemption for aliens lawfully in, or being processed for lawful admission to, the United States. The rule's objectives in relation to non-U.S. persons generally concern those implicated in illegal activity (including immigration violations), and will not affect lawful Canadian visitors.

Other Comments

Beyond the recurrent and major comments discussed above, no other comments received on the rule provided any persuasive reason to reconsider or depart from the rule text as previously proposed. Hence, the Department of Justice has carefully considered all comments and has concluded that the rule should be finalized without modification.

Regulatory Certifications

Regulatory Flexibility Act

The Attorney General, in accordance with the Regulatory Flexibility Act, has reviewed this regulation and by approving it certifies that this regulation will not have a significant economic impact on a substantial number of small entities for the following reason: The regulation concerns the collection, analysis, and indexing of DNA samples from certain individuals, and the preservation of biological evidence, by federal agencies. *See* 5 U.S.C. 605(b).

Executive Order 12866—Regulatory Planning and Review

This regulation has been drafted and reviewed in accordance with Executive Order 12866, § 1(b) (''The Principles of Regulation''). The Department of Justice has determined that this rule is a ''significant regulatory action'' under Executive Order 12866, § 3(f), and accordingly this rule has been reviewed by the Office of Management and Budget. With respect to the expanded collection of DNA samples from certain individuals under this regulation, the cost of buccal swab kits is expected to be similar to the cost of finger-prick kits, which the FBI has provided in the existing program for the collection of DNA samples from federal convicts. Resulting per-sample analysis and storage costs also are expected to be similar. A finger-prick DNA-sample collection kit costs approximately $7.50, and it costs the FBI approximately $28.50 to analyze the DNA sample and $1.50 to store the sample (for a total of $37.50). When a match occurs, the FBI reanalyzes a DNA sample to confirm the match. The cost of such an analysis is approximately $37 per sample. The cost to the FBI to expunge a DNA record is approximately $100 per sample.

The individuals from whom DNA-sample collection is authorized under this rule, not covered by previous law and practice, generally fall into two broad categories: (1) Persons arrested for or charged with (but not yet convicted of) federal crimes, and (2) non-U.S. persons arrested or detained by DHS. According to the Department of Justice's 2004 Compendium of Federal Justice Statistics, over 140,000 suspects were arrested for federal offenses in fiscal year 2004. *See* Bureau of Justice Statistics, U.S. Dep't of Justice, Office of Justice Programs, Compendium of Federal Justice Statistics, 2004, available at *http://ojp.usdoj.gov/bjs/abstract/cfjs04.htm*, at 1, 13, & 18. According to the DHS 2006 Yearbook of Immigration Statistics, 1,206,457 aliens were apprehended. *Id.* at 91. Based on these figures, the Department estimates that on an annual basis the number of individuals from whom DNA-sample collection is authorized under this rule will be approximately 1.2 million. The actual number of individuals from whom DNA samples are collected will be less to the extent that the Attorney General grants exceptions or the Secretary of Homeland Security exercises his discretion to limit DNA-sample collection in accordance with 28 CFR 28.12(b), and to the extent that individuals entering the system through arrest or detention previously have had DNA samples collected and repetitive collection is not required.

The Department estimates that more than 61,000 crimes have been solved or their investigation assisted by the use of DNA collected from individuals since the inception of CODIS. In addition, there have been over 13,000 forensic matches of DNA. Forensic matches occur when DNA evidence from one crime scene is matched to DNA evidence from another crime scene. As of August 2008, more than 6.2 million offenders and 233,000 forensic profiles are contained in the database.

Executive Order 13132—Federalism

This regulation will not have substantial direct effects on the States, on the relationship between the national government and the States, or on the distribution of power and responsibilities among the various levels of government. Therefore, in accordance with Executive Order 13132, it is determined that this rule does not have sufficient federalism implications to warrant the preparation of a Federalism Assessment.

Executive Order 12988—Civil Justice Reform

This regulation meets the applicable standards set forth in sections 3(a) and 3(b)(2) of Executive Order 12988.

Unfunded Mandates Reform Act of 1995

This rule will not result in the expenditure by State, local, and tribal governments, in the aggregate, or by the private sector, of $100 million or more in any one year, and it will not significantly or uniquely affect small governments. Therefore, no actions were deemed necessary under the provisions of the Unfunded Mandates Reform Act of 1995.

Small Business Regulatory Enforcement Fairness Act of 1996

This rule is not a major rule as defined in section 251 of the Small Business Regulatory Enforcement Fairness Act of 1996. *See* 5 U.S.C. 804. This rule will not result in an annual effect on the economy of $100 million or more; a major increase in costs or prices; or significant adverse effects on competition, employment, investment, productivity, or innovation, or on the ability of United States-based companies to compete with foreign-based companies in domestic and export markets.

List of Subjects in 28 CFR Part 28

Crime, Information, Law enforcement, Prisoners, Prisons, Probation and parole, Records.

■ Accordingly, for the reasons stated in the interim rules published at 70 FR 4763 on January 31, 2005, and at 70 FR 21951 on April 28, 2005, and for the reasons stated in the preamble to this rule, the amendments set forth in those interim rules are adopted as final without change; and for the reasons stated in the preamble, part 28 of 28 CFR Chapter I is further amended to read as follows:

PART 28—DNA IDENTIFICATION SYSTEM

■ 1. The authority citation for part 28 is revised to read as follows:

Authority: 28 U.S.C. 509, 510; 42 U.S.C. 14132, 14135a, 14135b; 10 U.S.C. 1565; 18 U.S.C. 3600A; Public Law 106–546, 114 Stat. 2726; Public Law 107–56, 115 Stat. 272; Public Law 108–405, 118 Stat. 2260; Public Law 109–162, 119 Stat. 2960; Public Law 109–248, 120 Stat. 587.

■ 2. Section 28.12 is revised to read as follows:

§ 28.12 Collection of DNA samples.

(a) The Bureau of Prisons shall collect a DNA sample from each individual in the custody of the Bureau of Prisons who is, or has been, convicted of—

(1) A Federal offense (including any offense under the Uniform Code of Military Justice); or

(2) A qualifying District of Columbia offense, as determined under section 4(d) of Public Law 106–546.

(b) Any agency of the United States that arrests or detains individuals or supervises individuals facing charges shall collect DNA samples from individuals who are arrested, facing charges, or convicted, and from non-United States persons who are detained under the authority of the United States. For purposes of this paragraph, ''non-United States persons'' means persons who are not United States citizens and who are not lawfully admitted for permanent residence as defined in 8 CFR 1.1(p). Unless otherwise directed by the Attorney General, the collection of DNA samples under this paragraph may be limited to individuals from whom the agency collects fingerprints and may be subject to other limitations or exceptions approved by the Attorney General. The DNA-sample collection requirements for the Department of Homeland Security in relation to non-arrestees do not include, except to the extent provided by the Secretary of Homeland Security, collecting DNA samples from:

(1) Aliens lawfully in, or being processed for lawful admission to, the United States;

(2) Aliens held at a port of entry during consideration of admissibility and not subject to further detention or proceedings;

(3) Aliens held in connection with maritime interdiction; or

(4) Other aliens with respect to whom the Secretary of Homeland Security, in consultation with the Attorney General, determines that the collection of DNA samples is not feasible because of operational exigencies or resource limitations.

(c) The DNA-sample collection requirements under this section shall be implemented by each agency by January 9, 2009.

(d) Each individual described in paragraph (a) or (b) of this section shall cooperate in the collection of a DNA sample from that individual. Agencies required to collect DNA samples under this section may use or authorize the use of such means as are reasonably necessary to detain, restrain, and collect a DNA sample from an individual described in paragraph (a) or (b) of this section who refuses to cooperate in the collection of the sample.

(e) Agencies required to collect DNA samples under this section may enter into agreements with other agencies described in paragraph (a) or (b) of this section, with units of state or local governments, and with private entities to carry out the collection of DNA samples. An agency may, but need not, collect a DNA sample from an individual if—

(1) Another agency or entity has collected, or will collect, a DNA sample from that individual pursuant to an agreement under this paragraph;

(2) The Combined DNA Index System already contains a DNA analysis with respect to that individual; or

(3) Waiver of DNA-sample collection in favor of collection by another agency is authorized by 42 U.S.C. 14135a(a)(3) or 10 U.S.C. 1565(a)(2).

(f) Each agency required to collect DNA samples under this section shall—

(1) Carry out DNA-sample collection utilizing sample-collection kits provided or other means authorized by the Attorney General, including approved methods of blood draws or buccal swabs;

(2) Furnish each DNA sample collected under this section to the Federal Bureau of Investigation, or to another agency or entity as authorized by the Attorney General, for purposes of analysis and entry of the results of the analysis into the Combined DNA Index System; and

(3) Repeat DNA-sample collection from an individual who remains or becomes again subject to the agency's jurisdiction or control if informed that a sample collected from the individual does not satisfy the requirements for analysis or for entry of the results of the analysis into the Combined DNA Index System.

(g) The authorization of DNA-sample collection by this section pursuant to Public Law 106–546 does not limit DNA-sample collection by any agency pursuant to any other authority.

Dated: December 4, 2008.

Michael B. Mukasey,

Attorney General.

[FR Doc. E8–29248 Filed 12–9–08; 8:45 am]

BILLING CODE 4410–19–P

DEPARTMENT OF THE INTERIOR

Office of Surface Mining Reclamation and Enforcement

30 CFR Part 924

[MS–018–FOR; Docket No. OSM–2008–0017]

Mississippi Regulatory Program

AGENCY: Office of Surface Mining Reclamation and Enforcement, Interior.

ACTION: Final rule; approval of amendment.

SUMMARY: We, the Office of Surface Mining Reclamation and Enforcement (OSM), are approving an amendment to the Mississippi regulatory program (Mississippi program) under the Surface Mining Control and Reclamation Act of 1977 (SMCRA). Mississippi proposed revisions to its regulations and statute regarding ''valid existing rights'' as they pertain to designation of lands as unsuitable for surface coal mining operations. Mississippi intends to revise its program to be consistent with SMCRA.

DATES: *Effective Date:* December 10, 2008.

FOR FURTHER INFORMATION CONTACT: Sherry Wilson, Director, Birmingham Field Office. Telephone: (205) 290–7282. E-mail: *swilson@osmre.gov.*

SUPPLEMENTARY INFORMATION:

I. Background on the Mississippi Program
II. Submission of the Amendment
III. OSM's Findings
IV. Summary and Disposition of Comments
V. OSM's Decision
VI. Procedural Determinations

I. Background on the Mississippi Program

Section 503(a) of the Act permits a State to assume primacy for the regulation of surface coal mining and reclamation operations on non-Federal and non-Indian lands within its borders by demonstrating that its State program includes, among other things, ''* * * a State law which provides for the regulation of surface coal mining and reclamation operations in accordance with the requirements of this Act * * *; and rules and regulations consistent with regulations issued by the Secretary pursuant to this Act.'' See 30 U.S.C. 1253(a)(1) and (7). On the basis of these criteria, the Secretary of the Interior approved the Mississippi program on September 4, 1980. You can find background information on the Mississippi program, including the Secretary's findings and the disposition of comments, in the September 4, 1980, **Federal Register** (45 FR 58520). You can find later actions on the Mississippi program at 30 CFR 924.10, 924.15, 924.16, and 924.17.

II. Submission of the Amendment

By letter dated April 5, 2006 (Administrative Record No. MS–0402), Mississippi sent us an amendment to its program under SMCRA (30 U.S.C. 1201 *et seq.*). Mississippi sent the amendment at its own initiative.

We announced receipt of the proposed amendment in the May 24, 2006, **Federal Register** (71 FR 29867). In the same document, we opened the public comment period and provided an opportunity for a public hearing or meeting on the adequacy of the amendment. No one requested a public hearing or meeting. The public comment period closed on June 23, 2006.

During our review of the amendment, we identified concerns about Mississippi's use of the term ''Valid Rights'' in its statute while the Federal regulations and statute uses the term ''Valid Existing Rights.'' We notified Mississippi of these concerns by letter dated August 17, 2006 (Administrative Record No. MS–0414).

By letter dated May 30, 2008 (Administrative Record No. MS–0416–02), Mississippi provided explanatory information concerning the meaning of the terms ''valid rights'' and ''valid existing rights'' as used in the State statutes and regulations. By e-mail dated July 23, 2008 (Administrative Record No. MS–0416–03), Mississippi sent us a revised copy of its regulations.

Based upon Mississippi's explanatory information and revisions to its amendment, we reopened the public comment period in the August 26, 2008, **Federal Register** (73 FR 50263). No one requested a public hearing or meeting. The public comment period closed on September 10, 2008.

III. OSM's Findings

Following are the findings we made concerning the amendment under SMCRA and the Federal regulations at 30 CFR 732.15 and 732.17. We are approving the amendment as described below.

A. Changes to the Mississippi Code Annotated Section 53–9–71(4)

Mississippi proposed to revise section 53–9–71(4) to provide that after July 1, 1979, and subject to valid rights, no surface coal mining operations shall be permitted on certain lands. Those certain lands are specified in section 53–9–71(4) of the Mississippi statute.

The Federal counterpart statute to Mississippi's above statute is found at section 522(e) of SMCRA. Section 522(e) prohibits or restricts surface coal mining operations on certain lands, ''subject to valid existing rights,'' after the date of SMCRA's enactment (August 3, 1977), including, among other areas, units of the National Park System, Federal lands in national forests, and buffer zones for public parks, public roads, occupied dwellings, and cemeteries. The Act provides that these prohibitions and restrictions do not apply to operations in existence or under a permit on the date of enactment.

Mississippi's statute prohibits or restricts coal mining operations on the same lands as its Federal counterpart. It makes these prohibitions or restrictions subject to Valid Rights. We received a letter dated May 30, 2008 (Administrative Record No. MS–0416–02), from the General Counsel for the Mississippi Department of Environmental Quality stating that it was his opinion that the term ''valid rights'' as used in § 53–9–71(4) means ''valid existing rights'' as used in the State regulations and SMCRA. In addition, these prohibitions and restrictions do not apply to operations in existence or under a permit on the date of enactment of the State statute. Because rights that would exist under the Federal statute would also exist under the Mississippi statute, we find that Mississippi's proposed statute is no less stringent than the Federal statute.

B. Changes to the Mississippi Surface Coal Mining Regulations (MSCMR)

Mississippi proposed to revise its regulations in order to reconcile them with the State's above proposed statute revision. In this statute, Mississippi uses the term ''valid rights.'' Mississippi clarified that the term ''valid rights'' as used in the State statute means the same as its term ''valid existing rights'' as used in the State regulations at MSCMR Section 105. Following are the regulations that Mississippi proposed to add or revise:

MSCMR Section 105. Definitions

Mississippi proposed to add a definition for ''valid rights'' to read as follows:

Valid Rights—as used in § 53–9–71(4) of the Act means Valid Existing Rights.

MSCMR Section 1101. Authority

Mississippi proposed to revise this section to read as follows:

The Commission is authorized by § 53–9–71(4) of the Act to prohibit or limit surface coal mining operations on or near certain private, federal and other public lands, subject to valid rights.

MSCMR Section 1105. Areas Where Mining is Prohibited or Limited

Mississippi proposed to revise the introductory paragraph of this section to read as follows:

Subject to valid existing rights as defined in § 105, no surface coal mining operations shall be conducted on the following lands unless you have valid existing rights as determined under § 1106 or qualify for the exception for existing operations under paragraph (h) of this section:

SMCRA does not define or explain the term ''valid existing rights'' (VER) in the context of section 522(e) of the Act; however, our rulemaking on December 17, 1999 (64 FR 70766), does. Our regulations define VER as a set of circumstances under which a person may, subject to regulatory authority approval, conduct surface coal mining operations on lands where section 522(e) of the Act and 30 CFR 761.11 would otherwise prohibit such operations. The Mississippi regulation at MSCMR section 105 contains a definition for VER that is substantively the same as the Federal definition for VER. Also, Mississippi added a new regulation defining ''valid rights,'' found in the State statute at section 53–9–71(4), as having the same meaning as its definition of ''valid existing rights'' as defined in its regulations. The regulation revisions at MSCMR sections 1104 and 1105 simply clarify that surface coal mining operations on lands where mining is prohibited or restricted are subject to VER. Finally, we received a letter dated May 30, 2008 (Administrative Record No. MS–0416–02), from the General Counsel for the Mississippi Department of Environmental Quality stating that it was his opinion that the term ''valid rights'' as used in § 53–9–71(4) means ''valid existing rights'' as used in the State regulations and SMCRA. For the above reasons, we find that the revisions to Mississippi's regulations are no less effective than the Federal regulations and we are approving them.

IV. Summary and Disposition of Comments

Public Comments

We asked for public comments on the amendment, but did not receive any.

Federal Agency Comments

On April 20, 2006, and August 15, 2008, under 30 CFR 732.17(h)(11)(i) and section 503(b) of SMCRA, we requested comments on the amendment from various Federal agencies with an actual or potential interest in the Mississippi program (Administrative Record No. MS–0416–04). We did not receive any comments.

Environmental Protection Agency (EPA) Concurrence and Comments

Under 30 CFR 732.17(h)(11)(ii), we are required to get a written concurrence from EPA for those provisions of the program amendment that relate to air or water quality standards issued under the authority of the Clean Water Act (33 U.S.C. 1251 et seq.) or the Clean Air Act (42 U.S.C. 7401 et seq.). On August 15, 2008, we requested comments on the proposed amendments from the EPA (Administrative Record No. MS–0416–04). The EPA did not respond to our request.

V. OSM's Decision

Based on the above findings, we approve the amendment Mississippi sent us on April 5, 2006, and as revised on July 23, 2008.

To implement this decision, we are amending the Federal regulations at 30 CFR Part 924, which codify decisions concerning the Mississippi program. We find that good cause exists under 5 U.S.C. 553(d)(3) to make this final rule effective immediately. Section 503(a) of SMCRA requires that the State's program demonstrate that the State has the capability of carrying out the provisions of the Act and meeting its purposes. Making this rule effective immediately will expedite that process. SMCRA requires consistency of State and Federal standards.

VI. Procedural Determinations

Executive Order 12630—Takings

In this rule, the State is adopting valid existing rights standards that are similar to the standards in the Federal definition at 30 CFR 761.5. Therefore, this rule has the same takings implications as the Federal valid existing rights rule. The takings implications assessment for the Federal valid existing rights rule appears in part XXIX.E. of the preamble to that rule. See 64 FR 70766, 70822–27, December 17, 1999.

Executive Order 12866—Regulatory Planning and Review

This rule is exempted from review by the Office of Management and Budget (OMB) under Executive Order 12866.

Executive Order 12988—Civil Justice Reform

The Department of the Interior has conducted the reviews required by section 3 of Executive Order 12988 and has determined that this rule meets the applicable standards of subsections (a) and (b) of that section. However, these standards are not applicable to the actual language of State regulatory programs and program amendments because each program is drafted and promulgated by a specific State, not by OSM. Under sections 503 and 505 of SMCRA (30 U.S.C. 1253 and 1255) and the Federal regulations at 30 CFR 730.11, 732.15, and 732.17(h)(10), decisions on proposed State regulatory programs and program amendments submitted by the States must be based solely on a determination of whether the submittal is consistent with SMCRA and its implementing Federal regulations and whether the other requirements of 30 CFR parts 730, 731, and 732 have been met.

Executive Order 13132—Federalism

This rule does not have Federalism implications. SMCRA delineates the roles of the Federal and State governments with regard to the regulation of surface coal mining and reclamation operations. One of the purposes of SMCRA is to ''establish a nationwide program to protect society and the environment from the adverse effects of surface coal mining operations.'' Section 503(a)(1) of SMCRA requires that State laws regulating surface coal mining and reclamation operations be ''in accordance with'' the requirements of SMCRA, and section 503(a)(7) requires that State programs contain rules and regulations ''consistent with'' regulations issued by the Secretary pursuant to SMCRA.

Executive Order 13175—Consultation and Coordination With Indian Tribal Governments

In accordance with Executive Order 13175, we have evaluated the potential effects of this rule on Federally-recognized Indian tribes and have determined that the rule does not have substantial direct effects on one or more Indian tribes, on the relationship between the Federal Government and Indian tribes, or on the distribution of power and responsibilities between the Federal Government and Indian tribes. This determination is based on the fact that the Mississippi program does not regulate coal exploration and surface coal mining and reclamation operations on Indian lands. Therefore, the Mississippi program has no effect on Federally-recognized Indian tribes.

Executive Order 13211—Regulations That Significantly Affect The Supply, Distribution, or Use of Energy

On May 18, 2001, the President issued Executive Order 13211 which requires agencies to prepare a Statement of Energy Effects for a rule that is (1) considered significant under Executive Order 12866, and (2) likely to have a significant adverse effect on the supply, distribution, or use of energy. Because this rule is exempt from review under Executive Order 12866 and is not expected to have a significant adverse effect on the supply, distribution, or use of energy, a Statement of Energy Effects is not required.

National Environmental Policy Act

This rule does not require an environmental impact statement because section 702(d) of SMCRA (30 U.S.C. 1292(d)) provides that agency decisions on proposed State regulatory program provisions do not constitute major Federal actions within the meaning of section 102(2)(C) of the National Environmental Policy Act (42 U.S.C. 4332(2)(C)).

Paperwork Reduction Act

This rule does not contain information collection requirements that require approval by OMB under the Paperwork Reduction Act (44 U.S.C. 3507 *et seq.*).

Regulatory Flexibility Act

The Department of the Interior certifies that this rule will not have a significant economic impact on a substantial number of small entities under the Regulatory Flexibility Act (5 U.S.C. 601 *et seq.*). The State submittal, which is the subject of this rule, is based upon counterpart Federal regulations for which an economic analysis was prepared and certification made that such regulations would not have a significant economic effect upon a substantial number of small entities. In making the determination as to whether this rule would have a significant economic impact, the Department relied upon the data and assumptions for the counterpart Federal regulations.

Small Business Regulatory Enforcement Fairness Act

This rule is not a major rule under 5 U.S.C. 804(2), the Small Business Regulatory Enforcement Fairness Act. This rule: (a) Does not have an annual effect on the economy of $100 million; (b) Will not cause a major increase in costs or prices for consumers, individual industries, Federal, State, or local government agencies, or geographic regions; and (c) Does not have significant adverse effects on competition, employment, investment, productivity, innovation, or the ability of U.S.-based enterprises to compete with foreign-based enterprises. This determination is based upon the fact that the State submittal, which is the subject of this rule, is based upon counterpart Federal regulations for which an analysis was prepared and a determination made that the Federal regulation was not considered a major rule.

Unfunded Mandates

This rule will not impose an unfunded mandate on State, local, or tribal governments or the private sector of $100 million or more in any given year. This determination is based upon the fact that the State submittal, which is the subject of this rule, is based upon counterpart Federal regulations for which an analysis was prepared and a determination made that the Federal regulation did not impose an unfunded mandate.

List of Subjects in 30 CFR Part 924

Intergovernmental relations, Surface mining, Underground mining.

Dated: November 20, 2008.

William L. Joseph,

Acting Mid-Continent Regional Director.

■ For the reasons set out in the preamble, 30 CFR part 924 is amended as set forth below:

PART 924—MISSISSIPPI

■ 1. The authority citation for part 924 continues to read as follows:

Authority: 30 U.S.C. 1201 *et seq.*

■ 2. Section 924.15 is amended in the table by adding a new entry in chronological order by ''Date of final publication'' to read as follows:

§ 924.15 Approval of Mississippi regulatory program amendments.

* * * * *

Original amendment submission date	Date of final publication	Citation/description
*	*	*
April 5, 2006	December 10, 2008	MSCMR 53–9–71(4) Sections: 105, 1101, and 1105.

[FR Doc. E8–29206 Filed 12–9–08; 8:45 am]

BILLING CODE 4310–05–P

DEPARTMENT OF DEFENSE

Office of the Secretary

[DOD–2007–HA–0048; RIN 0720–AB19]

32 CFR Part 199

TRICARE; Hospital Outpatient Prospective Payment System (OPPS)

AGENCY: Office of the Secretary, DoD.

ACTION: Final rule.

SUMMARY: This final rule implements a prospective payment system for hospital outpatient services similar to that furnished to Medicare beneficiaries, as set forth in Section 1833(t) of the Social Security Act. The rule also recognizes applicable statutory requirements and changes arising from Medicare's continuing experience with this system including certain related provisions of the Medicare Prescription Drug, Improvement, and Modernization Act of 2003. The Department is publishing this rule to implement an existing statutory requirement for adoption of Medicare payment methods for institutional care which will ultimately provide incentives for hospitals to furnish outpatient services in an efficient and effective manner.

DATES: *Effective Date:* February 9, 2009.

FOR FURTHER INFORMATION CONTACT: David E. Bennett or Martha M. Maxey, TRICARE Management Activity, Medical Benefits and Reimbursement Branch, telephone (303) 676–3494 or (303) 676–3627.

SUPPLEMENTARY INFORMATION:

I. Introduction and Background

The Medicare OPPS evolved out of Congressional mandates for replacement of Medicare's cost-based payment methodology with a prospective payment system (PPS). Medicare implemented OPPS for services furnished on or after August 1, 2000, with temporary transitional provisions to buffer the financial impact of the new prospective payment system (*e.g.*,

incorporating transitional pass-through adjustments and proportional reductions in beneficiary cost-sharing to lessen potential payment reductions experienced under the new OPPS).

Congress likewise established enabling legislation under section 707 of the National Defense Authorization Act of Fiscal Year 2002 (NDAA–02), Public Law 107–107 (December 28, 2001) changing the statutory authorization [in 10 U.S.C. 1079(j)(2)] that TRICARE payment methods for institutional care shall be determined, to the extent practicable, in accordance with the same reimbursement rules used by Medicare. Similarly, under 10 U.S.C. 1079(h), the amount to be paid to healthcare professional and other non-institutional healthcare providers ''shall be equal to an amount determined to be appropriate, to the extent practicable, in accordance with the same reimbursement rules used by Medicare''. Based on these statutory mandates, TRICARE is adopting Medicare's prospective payment system for reimbursement of hospital outpatient services currently in effect for the Medicare program as required under the Balanced Budget Act of 1997 (BBA 1997), (Pub. L. 105–33) which added section 1833(t) of the Social Security Act providing comprehensive provisions for establishment of a Medicare hospital OPPS. The Act required development of a classification system for covered outpatient services that consisted of groups arranged so that the services within each group were comparable clinically and with respect to the use of resources. The Act also described the method for determining the Medicare payment amount and beneficiary coinsurance amount for services covered under the outpatient PPS. This included the formula for calculating the conversion factor and data requirements for establishing relative payment weights.

Centers for Medicare & Medicaid Services (CMS) published a proposed rule in the **Federal Register** on September 8, 1998 (63 FR 47552) setting forth the proposed PPS for hospital outpatient services. On June 30, 1999, a correction notice was published (64 FR 35258) to correct a number of technical and typographical errors contained in the September 8, 1998 proposed rule.

Subsequent to publication of the proposed rule, the Medicare, Medicaid, and State Child Health Insurance Program (SCHIP) Balanced Budget Refinement Act of 1999 (BBRA 1999) (Pub. L. 106–133) enacted on November 29, 1999, made major changes that affected the proposed Medicare OPPS. The following BBRA 1999 provisions were implemented in a final rule (65 FR 18434) published on April 7, 2000.

- Made adjustments for covered services whose costs exceed a given threshold (i.e., an outlier payment).
- Established transitional pass-through payments for certain medical devices, drugs, and biologicals.
- Placed limitations on judicial review for determining outlier payments and the determination of additional payments for certain medical devices, drugs, and biologicals.
- Included as covered outpatient services implantable prosthetics and durable medical equipment and diagnostic x-ray, laboratory, and other tests associated with those implantable items.
- Limited the variation of costs of services within each payment classification group.
- Required at least annual review of the groups, relative payment weights, and the wage and other adjustments to take into account changes in medical practice, the addition of new services, new cost data, and other relevant information or factors.
- Established transitional corridors that would limit payment reductions under the hospital outpatient PPS.
- Established hold harmless provisions for rural and cancer hospitals.
- Provided that the coinsurance amount for a procedure performed in a year could not exceed the hospital inpatient deductible for the year.

Section 1833(t) of the Social Security Act was subsequently amended by the Medicare, Medicaid, and SCHIP Benefits Improvement and Protection Act (BIPA) of 2000 (Pub. L. 106–554) and the Medicare Prescription Drug, Improvement, and Modernization Act (MMA) of 2003 (Pub. L. 108–173) making additional changes in the OPPS.

As a prelude to implementation of the Medicare OPPS, Congress enacted the Omnibus Budget Reconciliation Act of 1986 (OBRA) (Pub. L. 99–509) which paved the way for development of a PPS for hospital outpatient services by prohibiting payment for non-physician services furnished to hospital patients (inpatients and outpatients), unless the services were furnished either directly or under arrangement with the hospital, except for services of physician assistants, nurse practitioners and clinical nurse specialists. Exceptions were also made for clinical diagnostic procedures, the payment of which may only be made to the person or entity that performed, or supervised the performance of, the test; and for exceptionally intensive hospital outpatient services provided to Skilled Nursing Facility (SNF) residents that lie well beyond the scope of the care that SNFs would ordinarily furnish, and thus beyond the ordinary scope of the SNF care plan. Consolidated billing facilitated the payment of services included within the scope of each ambulatory payment classification (APC). The OBRA also mandated hospitals to report claims for services under the Healthcare Common Procedure Coding System (HCPCS) which enabled the identification of specific procedures and services used in the development of outpatient PPS rates.

Ongoing changes and refinement to the Medicare OPPS have been accomplished through annual proposed and final rulemaking, along with interim transmittals and program memoranda taking into consideration changes in medical practice, addition of new services, new cost data, and other relevant information and factors. TRICARE will recognize to the extent practicable all applicable statutory requirements and changes arising from Medicare's continuing experience with this prospective payment system, including changes to the amounts and factors used to determine the payment rates for hospital outpatient services paid under the prospective payment system [e.g., annual recalibration (updating) of group weights and conversion factors and adjustments for area wage differences (wage index updates)]. The Department of Defense (DoD), otherwise referred to as the agency for purposes of this rule, will adopt all of Medicare's CY 2008 OPPS changes published in the **Federal Register** on November 27, 2007, (72 FR 66580); e.g., extending the current packaging to include guidance services, image processing services, intraoperative services, imaging supervision and interpretation services, diagnostic radiopharmaceuticals, contrast agents, and observation services; and reduction of payments in cases where a hospital receives a substantial partial credit from the manufacturer toward the cost of a replacement device implanted in a procedure.

While TRICARE intends to remain as true as possible to Medicare's basic OPPS methodology (i.e., adoption and updating of the Medicare data elements used to calculate the prospective payment amounts), there will be some deviations required to accommodate the uniqueness of the TRICARE program. These deviations have been designed to accommodate existing TRICARE benefit structure and claims processing procedures/systems implemented under

the TRICARE Next Generation Contracts (T–NEX), while at the same time eliminating any undue financial burden to TRICARE Prime, Extra, and Standard beneficiary populations. Following is a brief discussion of each of these deviations:

➢ *Outpatient Code Editor (OCE)*—The Medicare Outpatient Code Editor with APC program edits data to help identify possible errors in coding and assigns Ambulatory Payment Classification numbers based on HCPCS codes for payment under the OPPS. The Medicare OPPS APC is an outpatient equivalent of the inpatient Diagnosis Related Group (DRG)-based PPS. Like the inpatient system based on DRGs, each APC has a pre-established prospective payment amount associated with it. However, unlike the inpatient system that assigns a patient to a single DRG, multiple APCs can be assigned to one outpatient claim. If a patient has multiple outpatient services during a single visit, the total payment for the visit is computed as the sum of the individual payments for each service. Medicare provides updated versions of the OCE, along with installation and user manuals, to its fiscal intermediaries on a quarterly basis. The updated OCE reflects all new coding and editing changes during that quarter.

It was found upon initial testing of the OCE that it could not be used in its present form given the fact that the extensive editing embedded in its software program was specific to Medicare's benefit structure and internal claims processing requirements. As a result, the Agency has developed a TRICARE-specific OCE which will better accommodate the benefit structure and claims processing systems currently in place under the T–NEX contracts. This modified software package will edit claims data for errors and indicate actions to be taken and reasons why the actions are necessary. This expanded functionality will facilitate the linkage between the action being taken, the reasons for the action, and the information on the claim that caused the action. The edits will be specific for TRICARE, ensuring compliance with current claims processing criteria. The OCE will also assign an APC number for each service covered under the TRICARE OPPS and return information to be used as input to the TRICARE PRICER program.

Like Medicare's OCE, the TRICARE-specific OCE will be updated on a quarterly basis incorporating, to the extent practicable, all Medicare changes/updates (i.e., those changes initiated through rulemaking and transmittals/program memoranda). Periodic updating of the TRICARE-specific OCE will ensure consistency and accuracy of claims processing and payment under the TRICARE OPPS.

➢ *Deductible and Cost Sharing*—Medicare's OPPS coinsurance was initially frozen at 20 percent of the national median charge for the services within each APC (wage adjusted for the provider's geographic area) or 20 percent of the APC payment rate, whichever was greater (i.e., the coinsurance for an APC could not fall below 20 percent of the APC payment rate). This was designed so that, as the total payment to the provider increased each year based on market basket updates, the present or frozen coinsurance amount would become a smaller portion of the total payment until the coinsurance represented 20 percent of the total. Once the coinsurance became 20 percent of the payment amount, annual updates would be applied to the coinsurance so that it would continue to account for 20 percent of the total charge. Wage adjusted coinsurance amounts were further limited by the Medicare inpatient deductible. Subsequent legislation has accelerated the reduction of beneficiary copayment amounts by imposing prescribed percentage limitations off of the APC payment rate. For example, for all services paid under the Medicare OPPS in CY 2005, the national unadjusted copayment amount cannot exceed 45 percent of the APC rate. Accelerated reductions were imposed specifically for those APC groups for which coinsurance represented a relatively high proportion of the total payment.

A program payment percentage is calculated for each APC by subtracting the unadjusted national coinsurance amount for the APC from the unadjusted payment rate and dividing the result by the unadjusted payment rate. The payment rate for each APC group is the basis for determining the total payment (subject to wage-index adjustment) that a hospital will receive from the beneficiary and the Medicare program.

Since imposition of Medicare's unadjusted national coinsurance amounts would have an adverse financial impact on TRICARE beneficiaries (i.e., imposition of significantly higher cost-sharing for Prime beneficiaries), the Agency has opted to use the following hospital outpatient deductible and cost-sharing/copayments currently being applied in Tables 1 and 2 below for Prime, Extra, and Standard TRICARE programs for hospital outpatient services:

TABLE 1—HOSPITAL OUTPATIENT DEDUCTIBLES

TRICARE programs	Active duty family members		Retirees, their family members & survivors
	E1–E4	E5 & above	
Prime	None	None	None.
Extra	$50 per Individual $100 Maximum per family	$150 per Individual $300 Maximum per family	$150 per Individual. $300 Maximum per family.
Standard	$50 per Individual $100 Maximum per family	$150 per Individual $300 Maximum per family	$150 per Individual. $300 Maximum per family.

TABLE 2—HOSPITAL OUTPATIENT COPAYMENTS/COST-SHARING

Type of service	TRICARE prime program			TRICARE extra program	TRICARE standard program
	Active duty family member		Retirees, their family members & survivors		
	E1–E4	E5 & above			
Hospital Outpatient Departments *clinic visits; therapy visits; treatment rooms, etc.*	$0 copayment per visit.	$0 copayment per visit.	$12 copayment per visit.	Active Duty Family Members: Cost-share—15% of fee negotiated by contractor.	Active Duty Family Members: Cost-share—20% of the allowable charge.

TABLE 2—HOSPITAL OUTPATIENT COPAYMENTS/COST-SHARING—Continued

Type of service	TRICARE prime program			TRICARE extra program	TRICARE standard program
	Active duty family member		Retirees, their family members & survivors		
	E1–E4	E5 & above			
				Retirees, Their Family Members & Survivors: Cost-share—20% of the fee negotiated by the contractor.	Retirees, Their Family Members & Survivors: Cost-share—25% of the allowable charge.
Emergency Services *Emergency and urgently needed care obtained in hospital emergency room*.	$0 copayment per visit.	$0 copayment per visit.	$30 copayment per emergency room visit.		
Ambulatory Surgery (same day) Hospital-based ambulatory surgical center.	$0 copayment per visit.	$0 copayment per visit.	$25 copayment ..	ADFMs: Cost-share—$25	ADFMs: Cost-share—$25.
			No separate copayment/cost-share for separately billed professional charges.	Retirees, Their Family Members & Survivors: Cost-share—20% of the institutional fee negotiated by the contractor.	Retirees, Their Family Members & Survivors: Lesser of 25% of group rate or 25% of billed charge.
Birthing Centers *Prenatal care, outpatient delivery, and postnatal care provided in hospital-based birthing center*.	$0 copayment per visit.	$0 copayment per visit.	$25 copayment.		
Partial Hospitalization Programs (PHPs) *Mental health services provided in authorized hospital-based PHP*.	$0 copayment per visit.	$0 copayment per visit.	$40 per diem charge.	ADFMs: $20 per diem charge.	ADFMs: $20 per diem charge.
			No separate copayment/cost-share for separately billed professional charges.	Retirees, Their Family Members & Survivors: Cost-share—20% of the TRICARE allowed amount.	Retirees, Their Family Members & Survivors: Cost-share—25% of the TRICARE allowed amount.

➢ *Hold-Harmless Protection*—At the inception of the Medicare OPPS, providers were eligible to receive additional transitional outpatient payments (TOPs) if the payments they received under the OPPS were less than the payments they could have received for the same services under the payment system in effect before the OPPS. Prior to January 1, 2004, most hospitals that realized lower payments under OPPS received transitional corridor payments based on a percent of the decreased payments, with the exception of cancer hospitals, children's hospitals and rural hospitals having 100 or fewer beds, which were held harmless under this provision and paid the full amount of the decrease in payment under the OPPS. Since transitional corridor payments were intended to be temporary payments to ease the provider's transition from a prior cost-based payment system to a prospective payments system, they were terminated as of January 1, 2004, with the exception of cancer and children's hospitals, which were held harmless permanently under transitional corridor provisions of the statute (section 1833(t)(7) of the Social Security Act). The authority for making transitional corridor payments under section 1833(t)(7)(D)(i) of the Act, as amended by section 411 Public Law 108–173, expired for rural hospitals having 100 or fewer beds, and sole community hospitals (SCHs) located in rural areas as of December 31, 2005. However, subsequent legislation (section 5105 of Pub. L. 109–171) reinstituted the hold-harmless transitional outpatient payments (TOPs) for covered OPD services furnished on or after January 1, 2006, and before January 1, 2010, for rural hospitals having 100 or fewer beds and SCHs. This provision provided an increased payment for such hospitals for outpatient services if the Medicare OPPS payment they received was less than the pre-BBA payment amount (i.e., the amount that was received prior to implementation of OPPS) that they would have received for the same covered service. When the OPPS payment is less than the payment the provider would have received prior to OPPS implementation, the amount of payment is increased by 90 percent of the amount of that difference for CY 2007, and by 85 percent of the amount of the difference for CY 2008. The amount of payment under section 1833(t)(13)(B) of the Act, as amended by section 411 of Pub. L. 108–73, also provided a payment increase for rural SCHs of 7.1 percent for all services and procedures paid under the OPPS, excluding drugs, biologicals, brachytherapy seeds and services paid under pass-through payments effective January 1, 2006, if justified by a study of the difference in costs for rural SCHs, which include Medicare essential access community hospitals or EACHs.

While the Agency adopted the hold-harmless TOPs for rural hospitals having 100 or fewer beds and SCHs, it opted to totally exempt cancer and children's hospitals from the TRICARE OPPS in lieu of imposing the hold-harmless provision, given the administrative complexity of capturing the data required for payment of

monthly interim TOP amounts. TOPs would require a comparison of what would have been paid [i.e., billed charges and CHAMPUS Maximum Allowable Charge (CMAC) amounts] prior to implementation of the OPPS for hospital outpatient services to those amounts actually paid under the OPPS for the same services. A TOP would be allowed in addition to the OPPS amount if payment to a cancer or children's hospital was lower than the amount that would have been paid prior to implementation of the OPPS. Since transitional corridor payments were specifically designed to supplement the losses experienced under the OPPS (i.e., to pay for services at the full amount that would have been allowed prior to implementation of the OPPS), and most, if not all, outpatient services paid at billed charges or CMAC would exceed the OPPS amount, the program cannot justify the administrative burden/expense of maintaining the hold-harmless provisions for cancer and children's hospitals. As a result, TRICARE will continue to reimburse cancer and children's hospitals on a fee-for-services basis using billed charges and CMAC rates; i.e., they will be excluded altogether from the OPPS.

Adoption of the Medicare OPPS has also highlighted other policy considerations which must be addressed in order to accommodate preexisting authorization criteria and reimbursement systems. Following are these identified policy considerations and prescribed resolutions:

➢ *Partial Hospitalization Programs (PHP)*—The TRICARE criteria under which PHP services may be rendered are different than Medicare's—both with regard to the need for PHP services and facility requirements. Currently, Medicare OPPS partial hospitalization services may be provided to patients in lieu of inpatient psychiatric care in hospital outpatient departments or Medicare-certified community mental health centers (CMHCs). The Agency has opted to retain the existing mental health review criteria under 32 CFR 199.4(b)(10) in order to ensure the continued level and quality of mental healthcare afforded under the basic program. Following are the TRICARE review criteria for determining the medical necessity of psychiatric partial hospitalization services:

- The patient is suffering significant impairment from a mental disorder (as defined in § 199.2) which interferes with age appropriate functioning.
- The patient is unable to maintain himself or herself in the community, with appropriate support, at a sufficient level of functioning to permit an adequate course of therapy exclusively on an outpatient basis (but is able, with appropriate support, to maintain a basic level of functioning to permit partial hospitalization services and presents no substantial imminent risk of harm to self or others).
- The patient is in need of crisis stabilization, treatment of partially stabilized mental health disorders, or services as a transition from an inpatient program.
- The admission into the partial hospitalization program is based on the development of an individualized diagnosis and treatment plan expected to be effective for the patient and permit treatment at a less intensive level.

Based on existing mental health review criteria under 32 CFR 199.4(b)(10) and certification requirements prescribed under 32 CFR 199.6(b)(4)(xii)(A), including accreditation by the Joint Commission, under the current edition of the Standards for Behavioral Healthcare, not all hospital-based PHPs will be assured of receiving payment under the OPPS unless they meet the above prescribed certification requirements and enter into a participation agreement with TRICARE. CMHC PHPs have been excluded from payment under the TRICARE OPPS since CMHCs are not recognized as authorized providers under the TRICARE program.

While the authorization standards under 32 CFR 199.6(b)(4)(xii)(A) through (D) will be retained/applied for both hospital-based and freestanding PHPs currently recognized under the Program, including the requirement for a written participation agreement with TRICARE, freestanding PHPs will be exempt from TRICARE OPPS and will continue to be reimbursed under the existing TRICARE PHP per diem system as prescribed under 32 CFR 199.14(a)(2)(ix), subject to their own unique mental health copayment/cost-sharing provisions.

➢ Ambulatory Surgery Procedures—Currently, ambulatory surgery procedures provided in both freestanding ambulatory surgery centers (ASCs) and hospital outpatient departments or emergency rooms are paid using prospectively determined rates established on a cost basis and divided into eleven groups as prescribed under 32 CFR 199.14(d). These payment groups are further adjusted for area labor costs based on Metropolitan Statistical Areas (MSAs). The payment rates established under this system apply only to facility charges for ambulatory surgery (e.g., standard overhead amounts that include, but are not limited to, nursing and technician services, use of the facility and supplies and equipment directly related to the surgical procedure) and do not include such items as physician's fees, laboratory, X-rays or diagnostic procedures (other than those directly related to the performance of the surgical procedure), prosthetics and durable medical equipment for use in the patient's home. Ambulatory surgery procedures (both provided in hospital-based and freestanding ambulatory surgery centers) are subject to their own unique copayment/cost-sharing provisions under the current TRICARE ambulatory surgery benefit.

With implementation of the TRICARE OPPS, hospital-based ambulatory surgery procedures will no longer be reimbursed under the original eleven tier payment system, but will instead be paid on a rate-per-service basis that varies according to the APC group to which the surgical procedure is assigned. The relative weight of the APC group will represent the median hospital cost of the services included in the APC relative to the median cost of services included in APC 0606, Level 3 Clinic Visit. The prospective payment rate for each APC will be calculated by multiplying the APC's relative weight by a nationally established conversion factor and adjusting it for geographic wage differences. The APC payment will be subject to the deductible and cost-sharing/copayment amounts currently being applied under Prime, Extra, and Standard TRICARE programs for hospital outpatient services. Denial of Medicare inpatient procedures will also be adhered to under the TRICARE OPPS (i.e., denial of inpatient surgical procedures performed in a hospital outpatient setting) except for those inpatient procedures, which upon medical review, could be safely and efficaciously rendered in an outpatient setting due to TRICARE's younger, healthier beneficiary population. Exceptions to Medicare's inpatient surgical procedure listing were based on major part to standardized utilization management review criteria, (i.e., Interqual and Milliman), used by TRICARE Managed Care Support Contractors' medical review staff. TRICARE-specific APCs will be developed for these designated inpatient procedures based on median costs from the most recent 12 months of claims history. TRICARE OPPS reimbursement will also be extended for an inpatient procedure performed to resuscitate or stabilize a patient with an emergent, life-threatening condition who dies before being admitted as a patient,

which in this case, will be paid under a new technology APC.

Freestanding ASCs will be exempt from TRICARE OPPS and will continue to be paid under the existing eleven tier payment system. ASC procedures will be placed into one of ten groups by their median per procedure cost, starting with $0 to $299 for Group 1, and ending with $1,000 to $1,299 for Group 9 and $1,300 and above for Group 10, subject to their own unique copayment/cost-sharing provisions under the TRICARE freestanding ambulatory surgery benefit. The eleventh payment tier/group was added to the ASC reimbursement system as of November 1, 1998, for extracorporeal shock wave lithotripsy, with a rate established off of the inpatient Diagnostic Related Group (DRG) 323 which is currently $3,289.

➢ Birthing Centers—As described in 32 CFR 199.6(b)(4)(xi), a birthing center is a freestanding or institution-affiliated outpatient maternity care program which principally provides a planned course of outpatient prenatal care and outpatient childbirth services limited to low-risk pregnancies. These all-inclusive maternity and childbirth services are currently being reimbursed in accordance with 32 CFR 199.14(e) at the lower of the TRICARE established all-inclusive rate or the billed charge. The all-inclusive rate includes laboratory studies, prenatal management, labor management, delivery, post-partum management, newborn care, birth assistant, certified nurse-midwife professional services, physician professional services, and the use of the facility to the extent that they are usually associated with a normal pregnancy and childbirth. Since institutional-affiliated maternity centers will continue to be reimbursed under the TRICARE maximum allowable birthing center all-inclusive rate methodology as prescribed under 32 CFR 199.14(e), payment will be equal to the sum of the Class 3 CMAC for total obstetrical care for a normal pregnancy and delivery (CPT code 59400) and the TMA supplied non-professional component amount, which includes both the technical and professional components of tests usually associated with a normal pregnancy and childbirth. As a result, hospital-based birthing centers will continue to be reimbursed the same as freestanding birthing centers except that updating of the hospital-based all inclusive rate, consisting of the CMAC for procedure code 59400 (Birthing Center, all-inclusive charge, complete) and the state specific non-professional component, will lag two months behind the freestanding birthing center all-inclusive update; i.e., the freestanding birthing center all-inclusive rate components will usually be updated on February 1 of each year to coincide with the annual CMAC file update, followed by the hospital-based birthing center all-inclusive rate component updates on April 1 of the same year.

➢ *Observation Stays*—Observation Services are those services furnished on a hospital's premises, including the use of a bed and periodic monitoring by a hospital's staff, which are reasonable and necessary to evaluate an outpatient's condition or to determine the need for a possible admission to the hospital as an inpatient. While observation services reported with HCPCS code G0378 (hospital observation service, per hour) have been packaged into other independent separately payable hospital outpatient services since January 1, 2008, maternity observation claims that have a maternity diagnosis, a minimum of four hours per observation stay and not primary surgical procedure on the day of observation will still be identified using HCPCS code G0378 and reimbursed separately under APC T0002. Under the TRICARE OPPS, additional hospital services (e.g., separate emergency room visit or clinic visit) will not be required on a claim with a maternity diagnosis in order to receive separate payment for an observation stay.

➢ *End-Stage Renal Disease (ESRD) Dialysis Services*—In accordance with sections 1881(b)(2) and (b)(7) of the Social Security Act, a facility that furnishes dialysis services to Medicare patients with ESRD is paid a prospectively determined rate for each dialysis treatment furnished. The rate is a composite that includes all costs associated with furnishing dialysis services except for the costs of physician services and certain laboratory tests and drugs that are billed separately. CMS has exercised the authority granted under section 1833(t)(1)(B)(i) to exclude from the outpatient PPS those services for patients with ESRD that are paid under the ESRD composite rate. Since TRICARE does not have a comparable composite rate in effect for payment of ESRD services, they will be reimbursed under TRICARE's OPPS.

II. Treatment Settings Subject to Outpatient Prospective Payment System

The outpatient prospective payment system applies to any hospital participating in the Medicare program in the 50 United States, the District of Columbia, and Puerto Rico, except for Critical Access Hospitals (CAHs), Indian Health Service hospitals, certain hospitals in Maryland that qualify for payment under the state's cost containment waiver, and specialty care providers which include: (1) Cancer and children's hospitals; (2) freestanding ASCs; (3) freestanding Partial Hospitalization Programs (PHPs); (4) freestanding psychiatric and Substance Use Disorder Rehabilitation Facilities (SUDRFs); (5) Home Health Agencies (HHAs); (6) hospice programs; (7) other corporate services providers (e.g., comprehensive outpatient rehab facilities, freestanding cardiac catheterization centers, freestanding sleep diagnostic centers, and freestanding hyperbaric oxygen treatment centers); (8) freestanding birthing centers; (9) Veterans Administration (VA) hospitals; and (10) freestanding ESRD centers. Due to their inability to meet the more stringent requirements imposed for hospital-based and freestanding PHPs under the Program, CMHCs have also been excluded from payment under TRICARE's OPPS for partial hospitalization program (PHP) services since they are not recognized as authorized providers under the TRICARE program.

An outpatient department, remote location hospital, satellite facility, or other provider-based entity must also be either created by, or acquired by, a main provider (hospital qualifying for payment under TRICARE OPPS) for the purpose of furnishing healthcare services of the same type as those furnished by the main provider under the name, ownership, and financial administrative control of the main provider, in accordance with the following requirements under 42 CFR 413.65 (Medicare Regulation) in order to qualify for payment under the OPPS:

- *Licensure*—The outpatient department, remote location hospital, or the satellite facility and the main hospital are operated under the same license, except in areas where the State requires a separate license for the department of the provider.
- *Clinical Integration*—Professional staff of the outpatient department, remote location hospital or satellite facility are monitored by, and have clinical privileges at the main hospital. The medical director of the outpatient facility must also maintain a reporting relationship with the chief medical officer at the main hospital that has the same frequency, intensity and level of accountability that exists in the relationship between other departmental medical directors and the chief medical officer of the main hospital. Medical records for patients

treated in the facility or organization must be integrated into a unified retrieval system (or cross reference) of the main hospital and there must be full access to all services provided at the main hospital for patients treated in the outpatient facility requiring further care.

• *Financial integration.* The financial operation of the outpatient facility must be fully integrated within the financial system of the main hospital, as evidenced by shared income and expenses between the main hospital and outpatient facility.

• *Public awareness.* The outpatient department, remote location hospital, or a satellite facility is held out to the public and other payers as part of the main provider. When patients enter the outpatient facility they are aware that they are entering the main provider and are billed accordingly.

Having clear criteria for provider-based status is important because this designation can result in additional TRICARE payments for services at the provider-based facility (i.e., the incorporation of additional facility costs for covered outpatient services/procedures). TRICARE will accept the providers' determination on whether they meet the regulatory criteria for provider-based status for purposes of seeking reimbursement under the TRICARE OPPS.

III. Application of Ambulatory Payment Classification (APC) Model

Payment for services under the TRICARE OPPS is based on grouping outpatient services into APC groups in accordance with provisions outlined in section 1833(t) of the Social Security Act and its implementing regulation 42 CFR Part 419. This grouping is accommodated through the reporting of HCPCS codes and descriptors that are used to group homogenous services (both clinically and in terms of resource consumption) into their respective APC groups.

During the development of the TRICARE hospital OPPS it was recognized that certain hospital outpatient services were being paid based on fee schedules or other prospectively determined rates that were being applied across other ambulatory care settings. As a result, the following services were excluded from the OPPS in order to achieve consistency of payment across different service delivery sites: (1) Physician services; (2) nurse practitioner and clinical nurse specialist services; (3) physician assistant services; (4) certified nurse-midwife services; (5) services of a qualified psychologist; (6) clinical social worker services, except under half- and full-day partial hospitalization programs in which the services are included within the per diem payment amount; (7) services of an anesthetist; (8) screening and diagnostic mammographies; (9) clinical diagnostic services; (10) non-implantable durable medical equipment (DME), orthotics, prosthetics, and prosthetic devices and supplies; (11) hospital outpatient services furnished to SNF inpatients as part of their comprehensive care plan; (12) physical therapy; (13) speech-language pathology; (14) occupational therapy; (15) influenza and pneumococcal pneumonia vaccines; (16) take-home surgical dressings; (17) services and procedures designated as requiring inpatient care; and (18) ambulance services. These services will continue to be reimbursed under the current CMAC fee schedule or other TRICARE-recognized allowable charge methodology (e.g., statewide prevailings).

The remaining outpatient procedures which were not being paid under current fee schedules or other prospectively determined rates were grouped under an APC based on the following criteria:

• *Resource Homogeneity*—The amount and type of facility resources (for example, operating room, medical supplies, and equipment) that are used to furnish or perform the individual procedures or services within each APC group should be homogeneous. That is, the resources used are relatively constant across all procedures or services even though resources used may vary somewhat among individual patients.

• *Clinical Homogeneity*—The definition of each APC should be ''clinically meaningful.'' That is, the procedures or services included within the APC group relate generally to a common organ system or etiology, have the same degree of extensiveness, and utilize the same method of treatment.

• *Provider Concentration*—The degree of provider concentration associated with the individual services that comprise the APC is considered. If a particular service is offered only in a limited number of hospitals, then the impact of payment for the services is concentrated in a subset of hospitals. Therefore, it is important to have an accurate payment level for services with a high degree of provider concentration. Conversely, the accuracy of payment levels for services that are routinely offered by most hospitals does not bias the payment system against any subset of hospitals.

• *Frequency of Service*—Unless there is a high degree of provider concentration, creating separate APC groups for services that are infrequently performed is avoided. Since it is difficult to establish reliable payment rates for low-volume groups, HCPCS codes are assigned to an APC that is most similar in terms of resource use and clinical coherence.

• *Minimal Opportunities for Upcoding and Code Fragmentation*—The APC system is intended to discourage using a code in a higher paying group to define the care. That is, putting two related codes such as the codes for excising a lesion for 1.1 cm and one of 1.0 cm, in different APC groups may create an incentive to exaggerate the size of the lesions in order to justify the incrementally higher payment. APC groups based on subtle distinctions would be susceptible to this kind of coding. Therefore, APC groups were kept as broad and inclusive as possible without sacrificing resource or clinical homogeneity.

These procedures, along with their specific HCPCS coding and descriptors, were used to identify and group services within each established APC group. They included: (1) Surgical procedures (including hospital-based ASC procedures currently being paid under the eleven tier ASC payment methodology); (2) radiology, including radiation therapy; (3) clinic visits; (4) emergency department visits; (5) diagnostic services and other diagnostic tests; 6) partial hospitalization for the mentally ill; (7) surgical pathology; (8) cancer therapy; (9) implantable medical items (e.g., prosthetic implants, implantable DME and implantable items used in performing diagnostic x-rays and laboratory tests); (10) specific hospital outpatient services furnished to a beneficiary who is admitted to a SNF, but in which case the services are beyond the scope of SNF comprehensive care plans; (11) certain preventive services, such as colorectal cancer screening; (12) acute dialysis (e.g., dialysis for poisoning); and (13) ESRD services. These hospital outpatient procedures will be paid on a rate-per-service basis that varies according to the APC group to which they are assigned.

In accordance with section 1833(t)(2) of the Social Security Act, services and items within an APC group cannot be considered comparable with respect to the use of resources in the APC group if the highest median cost is more than 2 times the lowest median cost for an item or service within the same group (referred to a the ''2 times rule''). Exceptions may be granted in unusual cases, such as low-volume items and services.

IV. Public Comments

The TRICARE OPPS proposed rule (72 FR 17271) was published on April 1, 2008, providing a 60-day public comment period. Ten timely items of correspondence were received containing multiple comments on the proposed rule which resulted in a substantive change in hospital-based PHP reimbursement (i.e., reimbursement of a single per diem based on a minimum of three service units and payment of PHP professional services outside the per diem) and provided clarification regarding the temporary transitional payment adjustment (TTPA) and temporary military contingency payment adjustment (TMCPA) available under the TRICARE OPPS which will provide hospitals sufficient time to adjust and budget for potential revenue reductions and to ensure network adequacy deemed essential for military readiness and support during contingency operations. Following is a summary of the public comments and our responses:

Comment: Several commentors expressed support for the first option outlined in the proposed rule to provide an implementation plan involving three-year transitional payment adjustments for TRICARE network hospitals, but took exception to the proposal that the transitional adjustments only apply to hospitals that are in close proximity to military bases and treat a disproportionate share of military family members and/or hospitals that provide essential network specialty care. The commentors further supported the three-year transition to set higher payment percentages for the ten APCs (five clinic visits and five emergency room (ER) visits) during the first year, with reductions in each of the transition years. Several commentors also recommended a stop-loss system such as the one used in the implementation of the Medicare OPPS.

Response: We appreciate the commentor's concerns regarding the temporary transitional payment process and have modified it to include all hospitals, both network and non-network. For network hospitals, the temporary transitional payment adjustments (TTPAs) will cover a four-year period. The four-year transition will set higher payment percentages for the ten Ambulatory Payment Classification (APC) codes 604–609 and 613–616, with reductions in each of the transition years. For non-network hospitals, the adjustments will cover a three-year period, with reductions in each of the transition years.

For network hospitals, under the TTPAs, the APC payment level for the five clinic visit APCs would be set at 175 percent of the Medicare APC level, while the five ER visit APCs would be increased by 200 percent in the first year of TRICARE OPPS implementation. In the second year, the APC payment levels would be set at 150 percent of the Medicare APC level for clinic visits and 175 percent for ER APCs. In the third year, the APC visit amounts would be set at 130 percent of the Medicare APC level for clinic visits and 150 percent for ER APCs. In the fourth year, the APC visit amounts would be set at 115 percent of the Medicare APC level for clinic visits and 130 per cent for ER APCs. In the fifth year, the TRICARE and Medicare payment levels for the 10 APC visit codes would be identical.

For non-network hospitals, under the TTPAs, the APC payment level for the five clinic and ER visit APCs would be set at 140 percent of the Medicare APC level in the first year of TRICARE OPPS implementation. In the second year, the APC payment levels would be set at 125 percent of the Medicare APC level for clinic and ER visits. In the third year, the APC visit amounts would be set at 110 percent of the Medicare APC level for clinic and ER visits. In the fourth year, the TRICARE and Medicare payment levels for the 10 APC visit codes would be identical.

The transitional payment adjustments have been increased from those percentage amounts appearing in the proposed rule (73 FR 17271) to further buffer the decrease in revenues that hospitals will be experiencing during initial implementation of TRICARE OPPS. TTPA adjustments will also be extended to non-network providers, although they will be lower than for network hospitals to provide incentives for network participation. TRICARE will not utilize a stop-loss system such as the one used in the implementation of Medicare OPPS as it is not administratively feasible to adopt this type of transition under TRICARE. As stated in the proposed rule, these TTPAs will buffer the initial revenue reductions which will be experienced upon implementation of TRICARE's OPPS, providing hospitals with sufficient time to adjust and budget for potential revenue reductions for hospitals most vulnerable to implementation of OPPS.

Based on our discussions with the TRICARE Regional Offices (TROs), in regard to the second option to adopt, modify, and/or extend temporary adjustments to TRICARE's OPPS payments for TRICARE network hospitals deemed essential for military readiness and support during contingency operations, it was decided the policy for determining network waivers under the CHAMPUS Maximum Allowable Charge (CMAC) methodology should be used as a model to determine whether a temporary military contingency payment adjustment (TMCPA) under OPPS is warranted. This does not mean that network hospitals will be exempt from OPPS or that the 115% locality based waiver ceiling applies. Under the TMCPAs, this final rule will allow the reimbursement of higher payment rates for hospital-based outpatient healthcare services, if it is determined necessary to ensure adequate Preferred Provider networks. It might be determined that the initial TTPA of 200% for ER visits in a particular network hospital is not sufficient to ensure network adequacy and as a result, an additional TMCPA of 25 percent, (i.e., 225 percent of the OPPS rate for ER visits) would be necessary to support military contingency operations. The higher rate will be authorized only if all reasonable efforts have been exhausted in attempting to create an adequate network and that it is cost-effective and appropriate to pay the higher rate to ensure an appropriate mix of primary care and specialists in the network. For this purpose, such evidence may include consideration of the number of providers in the locality who provide the affected services, the mix of primary/specialty providers needed to meet patient access standards, the number of TRICARE beneficiaries in the locality, and the availability of Military Treatment Facility providers and any other factors the TMA Director, or designee determines relevant. If it is determined that the availability of an adequate number and mix of qualified healthcare providers in a network is not found, the Director TRO (DTRO) shall conduct a thorough analysis and forward recommendations with a cost estimate for approval to the TMA Director or designee through the TMA Contracting Officer (CO) for coordination. Those who can apply for the TMCPAs are: The DTRO; providers through the DTRO; Managed Care Support Contractors (MCSCs) through the DTRO; and Military Treatment Facilities (MTFs) through the DTRO. The TMA Director or designee is the final approval authority for TMCPAs. The procedures that are to be followed when submitting a TMCPA request will be outlined in the TRICARE Reimbursement Manual.

Comment: One commentor recommended the final rule include a

definition of the term ''close proximity'' and what constitutes a ''disproportionate share of military family members'' and ''essential network specialty care'' for future reference.

Response: Since these terms will not be used in determining whether TMCPAs will be authorized, there is no need to add a definition for ''close proximity'' and explain what constitutes a ''disproportionate share of military family members'' and ''essential network specialty care.''

Comment: Another commentor expressed concern that certain TRICARE dependent hospitals will be negatively impacted to the point that ongoing service capability to military personnel and their families will be severely limited. This commentor states a reasonable solution would be to create criteria for alternative reimbursement methodologies that would reflect an institution's dependence upon TRICARE. These provisions would include an exemption for network hospitals serving a disproportionate number of TRICARE patients and the continuation of TRICARE Maximum Allowable Charge rates for network hospitals entitled to an exemption.

Response: Under the governing statutory provisions implementing TRICARE's OPPS, TMA cannot exempt hospitals from TRICARE's OPPS on a case-by-case basis; however, see above response on the establishment of higher rates under TRICARE's OPPS using the TTPAs and TMCPAs.

Comment: Another commentor requested the requirement of ''military readiness or contingency operations'' be clarified or interpreted to allow exceptions at any time, to assure the military is prepared to perform its mission at any time and not only at times of ongoing operations. The commentor also believes the Director should be allowed to grant not just a ''temporary deviation'' but also be allowed to grant a more permanent exclusion from OPPS, if it is determined that a hospital's participation in TRICARE is required to support military readiness. The commentor further states that it is a major financial commitment for a hospital to participate in TRICARE and if the participation is only allowed on a temporary basis, this makes it problematic for the hospital to participate. They feel that allowing a more permanent exclusion from OPPS would be helpful in allowing a hospital to remain a part of the TRICARE network.

Response: As stated above, the statutory provisions implementing TRICARE's OPPS, does not allow TMA to permanently exclude hospitals from TRICARE's OPPS; however, there is latitude under these statutory provisions for the adoption of temporary transitional payment adjustments (TTPAs). These TTPAs will buffer the initial revenue reductions which will be experienced upon implementation of TRICARE's OPPS, providing hospitals with sufficient time to adjust and budget for potential revenue reductions for hospitals most vulnerable to implementation of OPPS. In addition, OPPS will ensure consistency of hospital outpatient payments throughout the United States, thus reducing the denial and return of claims to providers for coding errors. Providers will have access to OCE/Pricer software that will facilitate the filing and payment of outpatient claims with their TRICARE claims processors. This will reduce overall administrative costs for both providers and TRICARE contractors. Also, there are additional transitional adjustments, (i.e., TMCPAs) that will ensure network adequacy during military contingency operations. A change in troop deployment, the mix of primary/specialty providers needed to meet patient access standards, and base realignment and/or closures could impact whether a military contingency payment adjustment is warranted. Therefore, it would not be fiscally responsible to make these adjustments permanent.

Comment: Another commentor suggests that if DoD adopts a fully Medicare-based OPPS system for TRICARE, it will have a substantially negative effect upon the financial conditions of community hospitals closest to military installations that military personnel, retirees and their families depend upon for important medical services. The commentor further states that if DoD pegs outpatient hospital reimbursement rates to insufficient Medicare reimbursement, they believe that hospitals in California and elsewhere would consider not performing outpatient procedures on TRICARE members, or withdrawing from TRICARE contracts due to poor reimbursement. This could, in turn, harm access to enrollee outpatient care. This commentor recommends that: (1) DoD should, apart from the congressionally altered market basket update factor, separately calculate TRICARE OPPS rates based on the actual market basket update factor, which they believe more accurately reflects hospitals' costs. Doing so would ensure that more TRICARE network hospitals would retain their affiliation with the program and that hospitals closest to large military installations would not be adversely affected; (2) DoD should adopt a 15 percent ''glide path'' methodology that is similar to its prior rate adjustment methodologies enshrined at 32 CFR 199.14. Under this methodology, TRICARE-participating hospitals may not have their TRICARE outpatient rate reduced by more than 15 percent per year. For example, under this proposal, for the first year of the TRICARE transition OPPS period, TRICARE-contracting facilities would receive the TRICARE outpatient contracted rate, reduced by the lesser of: (a) The amount the contract rate exceeds the TRICARE OPPS rate for the same service or procedure; or (b) 15 percent off the contract rate. This amount becomes the contract rate for each subsequent year's calculation, until the difference between the TRICARE outpatient contracted amount and the TRICARE OPPS amount have equilibrated.

Response: In section 707 of NDAA–02, Congress changed the statutory authorization (in 10 U.S.C. 1079(j)(2)) that TRICARE payment methods for institutional care ''may be'' determined to the extent practicable in accordance with Medicare payment rules to a mandate that TRICARE payment methods ''shall be'' determined in accordance with Medicare payment rules. Based on this statutory mandate, TRICARE is adopting Medicare's prospective payment system for reimbursement of hospital outpatient services currently in effect for the Medicare program. As stated above, to minimize the potential negative impact OPPS may have on hospitals (both network and non-network), TRICARE has developed the TTPAs and TMCPAs.

Comment: One commentor requested clarification on whether there were other hospital outpatient services that were excluded from the TRICARE OPPS other than the eighteen (18) listed in 63 FR Pages 17276 and 27277.

Response: There are no other hospital outpatient services that are excluded under TRICARE's OPPS other than those listed in the proposed rule.

Comment: One commentor strongly recommended that the Final Rule establish an implementation date that is at least 90 days from the date of the publication of the Final Rule to allow adequate time for education and system changes to ensure a smooth transition to this new payment methodology.

Response: The agency will attempt to provide as much time as possible to ensure a smooth transition to this new payment methodology.

Comment: This same commentor urges TRICARE to release the updated

TRICARE specific OCE each quarter at the same time the updated Medicare OCE is released.

Response: TRICARE will release its updated OCE each quarter to coincide with Medicare's release of its OCE.

Comment: This same commentor seeks clarification of the statement ''upon medical review'' for those inpatient procedures that the Agency believes can be safely and efficaciously rendered in an outpatient setting due to TRICARE's younger, healthier beneficiary population. The commenter also seeks clarification on how the medical review process will take place, specifically if the medical review process will be conducted for an individual beneficiary claim based upon the review criteria or on advantages to a methodology that applies criteria to an individual beneficiary claim because of the diversity of the population which TRICARE serves.

Response: The current TRICARE exceptions to Medicare's inpatient surgical procedure listing was a result of a review of those inpatient procedures that the Agency determined could be safely and efficaciously rendered in an outpatient setting for TRICARE beneficiaries, based on standardized utilization management review criteria used by the TRICARE Managed Care Support Contractors' medical review staff. TRICARE's determination of whether a procedure is removed from Medicare's inpatient only list is not based on medical review of individual beneficiary claims but on generally accepted medical standards of practice as substantiated by standardized utilization management review criteria.

Comment: This same commentor suggests clarifying the payment rate of ''TRICARE standard allowable charge methodology'' for nonpass-through drugs, biologicals and radiopharmaceuticals with HCPCS codes, but without claims data, to be ''the same as the payment methodology under Medicare OPPS, i.e., separate payment based upon the payment rate for nonpass-through drugs and biologicals, in accordance with the ASP methodology.''

Response: TRICARE is adopting the same payment methodology as the Medicare OPPS effective January 1, 2008, in that the updated payment rates for drugs and biologicals will be based on average sale prices.

Comment: One commentor states the statement in the proposed rule appears vague on whether the Trauma Activation HCPCS G code will be paid in addition to the Critical Care CPT codes reported on the same date of service. The commentor is requesting that TRICARE clarify in the final rule that HCPCS code G0390 will be paid in addition to CPT critical care codes 99291 and 99292 when reported on the same date of service.

Response: TRICARE confirms if trauma activation occurs, HCPCS code G0390 will be paid in addition to CPT critical care codes 99291 or 99292 when reported on the same date of service.

Comment: One commentor had concerns about the requirement that hospitals must use procedure code 58260, which will be assigned to APC 0202, when billing for vaginal hysterectomies. The commentor states that while CPT code 58260 is appropriate for vaginal hysterectomies for uterus 250g or less, it would be inappropriate if performed in conjunction with other procedures such as with removal of tube(s) and or ovarie(s) and other combinations of vaginal hysterectomies because a more specific CPT code (58262) describes these services. The commentor states that proposing to submit a specific code for all vaginal hysterectomies when another CPT code is more appropriate conflicts with the standard set forth by the Department of Health and Human Services and HIPAA. The commentor recommends that TRICARE instruct providers to report the appropriate CPT code representative of the procedure being performed from the CPT code range of 58260–58294, rather than to report CPT code 58260 for all vaginal hysterectomies.

Response: TRICARE will instruct providers to report the appropriate CPT code for vaginal hysterectomies rather than to report CPT code 58260 for all vaginal hysterectomies.

Comment: We received multiple comments expressing concern over the differences in Medicare's PHP reimbursement under OPPS and TRICARE's proposed PHP reimbursement.

Response: Upon further review, TRICARE has decided to adopt Medicare's PHP reimbursement methodology for hospital-based PHPs. For CY 2009, we are adopting CMS' two separate APC payment rates for PHP: One for days with three services (APC 0172) and one for days with four or more services (APC 0173). In addition, TRICARE will allow services of physicians, clinical psychologists, Clinical Nurse Specialists (CNS's), Nurse Practitioners (NPs) and Physician Assistants (PAs) to bill separately for their professional services delivered in a PHP. The only professional services which will be included in the per diem are those furnished by Clinical Social Workers (CSWs), Occupational Therapists (OTs), and alcohol and addiction counselors.

Comment: This commentor also states the Medicare PHP reimbursement methodology does not have a provision for recognizing the costs for proving such specialized partial hospitalization services to children. They believe the use of a Medicare methodology, without accounting for the additional costs of providing care for children in these programs is not reasonable and will further weaken already limited access to community services for TRICARE beneficiaries.

Response: We appreciate the comment. TMA currently is reviewing all aspects of its PHPs and will take this under consideration. In the interim, the Medicare PHP reimbursement methodology will be applied to all hospital-based PHP services.

Comment: One commentor requested a full financial impact analysis be done to determine the impact a move to Medicare reimbursement rates will have on the ability of certified providers to stay in the TRICARE program and provide adequate access to PHP services for TRICARE beneficiaries.

Response: With our adoption of the Medicare full day rate for partial hospitalization and allowing payment of professional services outside the per diem rate, except for CSWs, OTs, and alcohol and addiction counselors, we feel the overall PHP payment (i.e., the TRICARE OPPS per diem plus payment for those professional services identified above) is comparable to the per diem rates currently in effect under TRICARE policy. In addition, the TMCPAs would also apply to ensure adequate access to PHP services.

Comment: Another commentor requested a thorough, detailed impact analysis be made available so that providers could better assess and anticipate the economic ramifications of this major change in TRICARE policy. They state that while the net reported impact of this rule does not exceed the $100 million threshold that would require ''certain regulatory assessments and procedures (73 FR 17287),'' the gross impact is more than twice the $100 million threshold and it is obvious from the reconciliation provided that this rule has some component parts with large impacts. The commentor states it would be helpful and informative if the Agency could share information that would illuminate the redistributive and/or economic impact of this proposed rule.

Response: Based on revised claims data (i.e., charge and payment data from January 2007–June 2007) it has been estimated that this rulemaking is

''economically significant'' as measured by the $100 million threshold, and hence also a major rule under the Congressional Review Act. Accordingly, a Regulatory Impact Analysis has been incorporated into the final rule presenting the costs and benefits associated with implementation of the TRICARE OPPS. Refer to the Regulatory Impact Analysis below for a detailed overview of the economic effects of this final rulemaking.

Comment: One commentor stated the Medicare PHP rate is established based on inclusion of Community Mental Health Centers. TRICARE does not permit CMHCs to be certified providers. The commentor goes on to state that because of this, the Medicare rate calculation is not a good proxy for TRICARE partial hospitalization programs because TRICARE does not include CMHCs as providers, but Medicare median costs rely very heavily on the cost structure of CMHCs.

Response: We agree with the commentor that historically the median per diem cost for CMHCs greatly exceeded the median per diem cost for hospital-based PHPs and fluctuated significantly from year to year while the median per diem cost for hospital-based PHPs remained relatively constant. However, CMS noted that for CY 2006 the hospital-based PHPs per diem median cost was $177 and for CMHCs, the per diem median cost was $172. CMS reports it has observed a stabilizing trend in CMHCs data and similar per diem costs between hospital-based and CMHC PHPs.

Comment: One commentor stated that TRICARE requires compliance with a set of standards (including potential on-site surveys) intended to assure the Department of Defense that the quality of care of certified programs exceeds minimal standards. Medicare does not have a like set of standards. The commentor states that additional resources are required to assure compliance with these standards both in the initial certification process and in the ongoing monitoring of compliance. These additional requirements should be taken into consideration in any rate-setting methodology. The commentor states compliance with these standards imposes additional duties on certified providers.

Response: The Agency will take these comments into consideration as we continue to monitor the applicability of OPPS reimbursement rates to PHP programs that are subject to TRICARE's more stringent certification standards.

Comment: One commentor states that in the event a TRICARE network hospital qualifies for deviations and/or temporary adjustment to OPPS payments for a period of two (2) years or greater (i.e., a ''TRICARE Adjusted Network Hospital''), then in order to support such TRICARE Adjusted Network Hospital's effort to recruit and maintain an adequate physician active medical staff, the Director, TMA or a designee can provide reimbursement to TRICARE participating active medical staff physicians of a TRICARE Adjusted Network Hospital reimbursement equal to the prevailing TRICARE maximum Allowable Charge schedule (TMAC) plus an additional fifteen percent (15%) of such TMAC.

Response: The professional reimbursement is subject to its own waiver process as outlined in 32 CFR Part 199.14(j)(1)(iv)(D) and (E). The two waivers recognized under the TRICARE Program for increased professional provider payments are as follows:

- *Locality Waivers:* If it is determined that access to specific health care services is severely impaired, higher payment rates could be applied to all similar services performed in a locality. Payment rates could be established through the addition of a percentage factor to an otherwise applicable payment amount, or by calculating a prevailing charge, or by using another government payment rate.
- *Network Waiver:* If it is determined that higher rates are necessary to ensure availability of an adequate number and mix of qualified network providers then the amount of reimbursement would be limited to the lesser of (a) an amount equal to the local fee for service charge; or (b) up to 115 percent of the CMAC.

Comment: The same commentor provided recommendations relating to OPPS coding guidelines and updates.

Response: Providers will have access to commercial OCE/Pricer software that will facilitate the filing and payment of outpatient claims with their TRICARE claims processors. In addition, the following data elements are available on TMA's OPPS Web site at *http://www.tricare.mil/opps/* and are updated quarterly and/or annually to coincide with the quarterly OPPS updates: (1) Ambulatory Payment Classifications (APCs) with Status Indicators (SIs) and Payment Rates; (2) Payment Status by HCPCS Code; (3) Payment Status Indicator Descriptions; (4) Statewide Cost-to-Charge Ratios; and (5) OPPS Provider File.

The following data elements are also available under TRICARE's Rates and Reimbursement Web site at *http://tricare.mil/tma/Rates.aspx* and are updated quarterly to coincide with Medicare's quarterly OPPS updates: (1) Age and Gender Restrictions Lists; (2) Inpatient Procedures List; (3) No Government Pay Procedure Code List; and (4) Questionable Covered Services List.

Comment: The same commentor provided recommendations relating to authorization of healthcare services.

Response: We appreciate the comments; however, the healthcare authorization process is outside the scope of the TRICARE OPPS implementing guidelines.

Comment: This same commentor expressed concern about TRICARE's departure from the requirement that ''TRICARE payment methods for institutional care be determined, to the extent practicable, in accordance with the same reimbursement rules used by Medicare,'' by replacing Medicare specific coding and claims payment guidelines with TRICARE specific coding and claims payment guidelines. The commentor further states that TRICARE contractors be required to follow Medicare specific coding and claims payment guidelines as required under the Balanced Budget Act of 1997 and as adopted by Medicare's prospective payment system for reimbursement of hospital inpatient and outpatient services. Only in the event that Medicare does not have guidelines shall guidelines specific to TRICARE be developed and utilized.

Response: While TRICARE intends to remain as true as possible to Medicare's coding guidelines, there will be some deviations required to accommodate the uniqueness of the TRICARE program. These deviations have been designed to accommodate existing TRICARE benefit structure and claims processing procedures/systems and the unique characteristics of the TRICARE beneficiary population.

V. TRICARE OPPS Reimbursement Methodology

➢ *General Overview*. Under the TRICARE OPPS, hospital outpatient services are paid on a rate-per-services basis that varies according to the APC group to which the service is assigned. The APC classification system is composed of groups of services that are comparable clinically and with respect to the use of resources. Level 1 (CPT) and Level II HCPCS codes and descriptors are used to identify and group the services within each APC. Costs associated with items or services that are directly related and integral to performing a procedure or furnishing a service have been packaged into each procedure or service within an APC group with the exception of: (1) New temporary technology APCs for certain approved services that are structured

based on cost rather than clinical homogeneity; and (2) separate APCs for certain medical devices, drugs, biologicals, radiopharmaceuticals and devices of brachytherapy under transitional pass-through provisions. TRICARE is adopting Medicare's classification system, along with its nationally established APC payment amounts as prescribed in section 1833(t) of the Social Security Act and in its accompanying Medicare regulation (42 CFR Part 419) for reimbursement of hospital outpatient services, to the extent practicable, in accordance with 10 U.S.C. 1079(j)(2), with the realization that there will be subtle differences occurring between the TRICARE and Medicare OPPS methodologies based on differences in the age and general health of the populations they serve (i.e., it can be assumed that the TRICARE population is younger and healthier than the population being served by Medicare). For example, TRICARE has already found it necessary to develop a new TRICARE specific APC for maternity observation stays (T0002) to accommodate its unique benefit structure and beneficiary population. There may also be subtle differences in the inpatient only procedure listings being maintained by the two programs since some of the Medicare inpatient only procedures may be determined by TRICARE, upon medical review, to be safe for administration in an outpatient setting due to its younger, healthier population. This may require the development of additional APC groups, along with nationally established payment amounts based on their median costs from the previous year's claims history.

The payment rate for each APC is calculated by multiplying the APC's relative weight by the conversions factor. Weights are derived based on median hospital costs for services/procedures assigned to the hospital outpatient APC groups. Billed charges for items integral to performing the major procedure or visit, which include packaged HCPCS codes (i.e., codes with SI = ''N'') and revenue codes appearing on the same claim, are converted to costs by multiplying each revenue center charge by the appropriate hospital-specific CCR. Centers for Medicare and Medicaid Services (CMS) currently use a four-tiered hierarchy of cost center CCRs to match a cost center to every possible revenue code appearing in the outpatient claims, with the top tier being the most common cost center and the lowest tier being the default CCR. If a hospital's cost center CCR was deleted by trimming, another cost center CCR in the revenue hierarchy can be applied. If no other department CCR can be applied to the revenue code on the claim, CMS uses the hospital's overall CCR for the revenue code.

The costs of the above services/procedures are then standardized for geographic wage variations by dividing the labor-related portion of the operating and capital costs (currently estimated at 60 percent on the average for each billed item) by the hospital inpatient prospective payment system (IPPS) wage index. The standardized labor-related cost and the nonlabor-related cost component for each billed item are summed to derive the total standardized cost for each separately payable HCPCS code. Extreme costs outside three standard deviations from the geometric mean will be eliminated prior to calculating the median cost for each separately payable HCPCS code. The median costs of these procedures will then be mapped to their assigned APCs, and the median costs of those assigned procedures will be used in establishing the overall APC median cost.

The relative payment weights are calculated for each APC by dividing the median cost of each APC by the median cost for APC 0606 (Level 3 Clinic Visit), which is $83.21 for CY 2008, as a reconfiguration of the visit APCs. APC 0606 was chosen in order to maintain consistency in using a median for calculating unscaled weights representing the median cost of some of the most frequently provided services. The relative payment weights were further adjusted by 1.3226 for budget neutrality, based on a comparison of aggregate payments using CY 2007 relative weights to aggregate payments using the CY 2008 final relative weights.

The other component used in establishing national APC payment amounts is the conversion factor, updated on an annual basis in accordance with section 1833(t)(3)(C)(iv) of the Social Security Act, which provides for CY 2008 an updated amount equal to the hospital inpatient market basket percentage increase applicable to hospital discharges under section 1886(b)(3)(B)(iii) of the Act. The market basket increase update factor of 3.3 percent for CY 2008, along with the required wage index budget neutrality adjustment of approximately 1.0019, the adjustment of 0.12 percent for the difference in the pass-through set-aside resulted in a final standard conversion factor for CY 2008 of $63.694.

The national unadjusted APC payment rates that were calculated by multiplying the CY 2008 scaled weight for each APC by the final CY 2008 conversion factor apply to all the services that are classified within the APC group. These national rates (i.e., the unadjusted national rates for both APCs and the HCPCS to which TRICARE OPPS payment was assigned) are listed on TMA's OPPS Web site at *http://www.tricare.mil/opps.*

➢ *Determination of Payment.* A payment status indicator (SI) is provided for every code in the HCPCS to identify how the service or procedure described by the code would be paid under TRICARE's hospital outpatient prospective payment system (OPPS); i.e., it indicates if a service represented by a HCPCS code is payable under the OPPS or another payment system, and also which particular OPPS payment policies apply. One, and only one, SI is assigned to each APC and to each HCPCS code. Following are the CY 2008 payment status indicators, along with a description of the particular services each indicator identifies.

TABLE 8—CY 2008 PAYMENT STATUS INDICATORS FOR TRICARE'S OUTPATIENT HOSPITAL OPPS

Indicator	Description	OPPS payment status
A	Services paid under some payment method other than OPPS (e.g., payment for non-implantable prosthetic and orthotic devices, DME, ambulance services, and individual professional services).	Not paid under OPPS. Paid by contractors under a fee schedule or payment system other than OPPS.
B	More appropriate code required for TRICARE OPPS	Not paid under OPPS.
C	Inpatient procedures	Not paid under OPPS. Admit patient. Bill as inpatient.
E	Items or services not covered by TRICARE	Not paid under OPPS.
F	Acquisition of corneal tissue, certain CRNA services, and Hepatitis B vaccines.	Not paid under OPPS. Paid on allowable charge basis.
G	Pass-through drugs and biologicals	Paid separate APCs under OPPS.

TABLE 8—CY 2008 PAYMENT STATUS INDICATORS FOR TRICARE'S OUTPATIENT HOSPITAL OPPS—Continued

Indicator	Description	OPPS payment status
H	Pass-through device categories allowed on a cost basis	Separate cost-based pass-through payment; not subject to cost-share/co-payment.
K	Non-pass-through drugs and biologicals, therapeutic radiopharmaceuticals, brachytherapy sources, blood and blood products.	Paid separate APCs under OPPS.
N	Packaged incidental items and services	Packaged into the primary procedure APC payment amount to which the incidental item or service is normally associated.
P	Partial hospitalization	Per diem APC payments for partial hospitalization programs.
Q	Services either separately payable or packaged	Paid under OPPS; services either packaged or separately payable depending on the specific circumstances of the HCPCS billing. OCE logic will be applied in determining if the services will be packaged or separately payable.
S	Significant procedures allowed under the OPPS for which multiple procedure reduction does not apply.	Paid under OPPS; separate APC payment.
T	Surgical services allowed under OPPS with multiple procedure payment reduction.	Paid under OPPS; separate APC payment.
V	Medical visits (including clinic or emergency department visits)	Paid under OPPS; separate APC payment.
W	Invalid HCPCS or invalid revenue code with blank HCPCS	Not paid under OPPS.
X	Ancillary services	Paid under OPPS; separate APC payment.
Z	Valid revenue code with blank HCPCS and no other SI assigned.	Not paid under OPPS.
TB	Reimbursement not allowed for CPT/HCPCS code submitted	Not paid under OPPS.

➢ *Adjustments for Specific Hospital Payment.* The hospital DRG wage adjustment factor will be used to adjust the portion of the payment rate that is attributable to labor-related costs for relative differences in labor and labor-related costs across geographic regions, with the exception of APCs with SIs ''K'' and ''G'' because of the inseparable, subordinate status of the outpatient department within the overall hospital setting. The TRICARE OPPS will also adhere to the same wage index changes as the TRICARE–DRG based payment system, except the effective date for changes will be January 1 of each year instead of October 1. This way only one wage index file will have to be maintained for both the OPPS and DRG-based payment systems. Following are the steps taken in achieving this adjustment for APCs in which multiple procedure discounting is not applied:

Step 1. Calculate 60 percent (labor-related portion) of the national unadjusted payment rate.

Step 2. Determine the wage index area in which the hospital is located and identify the wage index that applies to the specified hospital. The wage index values assigned to each hospital area reflect the new geographic statistical areas as a result of revised OMB standards (urban and rural) to which hospitals are assigned for FY 2008 under the IPPS.

Step 3. Adjust the wage index of hospitals located in certain qualifying counties that have a relatively high percentage of hospital employees who reside in the county, but who work in a different county with a higher wage index.

Step 4. Multiply the applicable wage index determined under Steps 2 and 3 by the amount determined in Step 1 that represents the labor-related portion of the national unadjusted payment rate.

Step 5. Calculate 40 percent (the nonlabor-related portion) of the national unadjusted payment rate and add the amount to the resulting product in step 4. The result is the wage index adjusted payment rate for the relevant wage index area in which the hospital is located.

Step 6. If the provider is a Sole Community Hospital (SCH), multiply the wage adjusted payment rate by 1.071 to calculate the total payment. This adjustment will apply to all services and procedures paid under the TRICARE OPPS (i.e., SIs ''P,'' ''S,'' ''T,'' ''V,'' and ''X''), excluding drugs, biologicals and services paid subject to pass-through payment (i.e., SIs ''G,'' ''H,'' and ''K'').

Applicable deductibles and/or cost-sharing/copayment amounts will be subtracted from the wage adjusted APC payment rate based on the eligibility status of the beneficiary at the time outpatient services were rendered (i.e., those deductibles and cost-sharing/copayment amounts applicable to Prime, Extra, and Standard beneficiary categories). TRICARE will retain its current hospital outpatient deductibles, cost-sharing/copayment amounts (refer to Tables 1 and 2 above) and catastrophic loss protection under the TRICARE OPPS. The ASC cost-sharing provision (i.e., assessment of a single copayment for both the professional and facility charge for a Prime beneficiary) will be adopted as long as it is administratively feasible. This will not apply to Extra and Standard beneficiaries since their cost-sharing is based on a percentage of the total allowed amount.

➢ *Additional APC Payment Adjustments.* TRICARE OPPS payment amounts are discounted when more than one surgical procedure (SI = T) is performed during a single operative session. Under these circumstances, TRICARE will reimburse the full payment and the beneficiary will pay the full cost-share/copayment for the procedure having the highest payment rate, while the remaining surgical procedure payments will be reduced by 50 percent, along with the beneficiary associated cost-share/copayment to reflect the savings associated with having to prepare the patient only once and the incremental costs associated with anesthesia, operating and recovery room use, and other services required for the second and subsequent procedures. A 50 percent discount will also be applied to the OPPS payment amounts and beneficiary copayments/cost-shares for procedures terminated before anesthesia is induced, as identified by modifiers ·73 (Discounted Outpatient Procedure Prior to Anesthesia Administration) and ·52 (Reduced Services). Full payment will be received for a procedure that is started but discontinued after the induction of anesthesia as reported by modifier ·74 (Discounted Procedure). In this case, payment would recognize the costs incurred by the hospital to

prepare the patient for surgery and the resources expended in the operating room and recovery room of the hospital. Discounting will also be applied to conditional, inherent, and independent bilateral procedures.

An additional payment is provided for outpatient services for which a hospital's charges, adjusted to cost, exceed the sum of the wage adjusted APC rate plus a fixed dollar threshold and a fixed multiple of the wage adjusted APC rate. Only line item services with SIs ''P,'' ''S,'' ''T'', ''V,'' or ''X'' will be eligible for outlier payment under TRICARE's OPPS. No outlier payments will be calculated for line item services with SIs ''G,'' ''H,'' ''K,'' and ''N,'' with the exception of blood and blood products.

For CY 2008, the outlier threshold is met when the cost of furnishing a service or procedure exceeds 1.75 times the APC payment amount *and* exceeds the APC payment rate plus the $1,575 fixed-dollar threshold. The fixed-dollar threshold was added to better target outliers to those high cost and complex procedures where a very costly service could present a hospital with significant financial loss. If a provider meets both of these conditions (i.e., the multiple threshold and the fixed-dollar threshold), the outlier payment is calculated at 50 percent of the amount by which the cost of furnishing the service exceeds 1.75 times the APC payment rate. The hospital would receive the normal APC payment rate along with the additional outlier amount. For example, suppose a hospital charges $26,000 for a procedure for which the APC adjusted amount is $3,000 and the overall facility CCR is 0.30. The estimated cost to the hospital is $7,800 (0.30 × $26,000). In order to determine whether the procedure is eligible for outlier payment, it first must be determined whether the cost for the service exceeds both the APC multiple outlier cost threshold of $5,250 (1.75 × $3,000) and the fixed-dollar threshold of $4,575 ($3,000 + $1,575). Since the estimated cost to the hospital ($7,800) exceeds both threshold amounts, the hospital would be eligible for 50 percent of the difference, which in this case would be $1,275 ($7,800 – $5,250/2).

➢ *TRICARE's Payment Hierarchy for Non-OPPS Procedures.* If the outpatient procedure is not assigned an APC payment amount (i.e., is not assigned SI ''G,'' ''H,'' ''K,'' ''P,'' ''S,'' ''T,'' ''V,'' or ''X''), but may be reimbursed under an existing TRICARE fee schedule or other prospectively determined rate (i.e., procedures assigned to SI ''A''), the following hierarchy will be used in pricing the procedure. The PRICER will first look to see if there is an appropriate CMAC available for pricing. If a CMAC cannot be found, it will then look to the Durable Medical Equipment Claims: Prosthetics, Orthotics, and Supplies (DMEPOS) fee schedule for pricing. If a DMEPOS fee schedule rate is not available for pricing, it will turn to statewide prevailings. If a statewide prevailing cannot be found, the PRICER will reimburse the procedure at the billed charge.

VI. TRICARE's OPPS Transitional Adjustments

Temporary transitional payment adjustments (TTPAs) will be in place for all hospitals, both network and non-network in order to buffer the initial decline in payments upon implementation of TRICARE's OPPS. This is consistent with the stop loss transitional period over which CMS fully implemented its OPPS rate structure, providing hospitals with sufficient time to adjust and budget for potential revenue reductions. It will also provide additional incentives for TRICARE network participation.

For network hospitals, the temporary transitional payment adjustments (TTPAs) will cover a four-year period. The four-year transition will set higher payment percentages for the ten Ambulatory Payment Classification (APC) codes 604–609 and 613–616, with reductions in each of the transition years. For non-network hospitals, the adjustments will cover a three year period, with reductions in each of the transition years. For network hospitals, under the TTPAs, the APC payment level for the five clinic visit APCs would be set at 175 percent of the Medicare APC level, while the five ER visit APCs would be increased by 200 percent in the first year of OPPS implementation. In the second year, the APC payment levels would be set at 150 percent of the Medicare APC level for clinic visits and 175 percent for ER APCs. In the third year, the APC visit amounts would be set at 130 percent of the Medicare APC level for clinic visits and 150 percent for ER APCs. In the fourth year, the APC visit amounts would be set at 115 percent of the Medicare APC level for clinic visits and 130 percent for ER APCs. In the fifth year, the TRICARE and Medicare payment levels for the 10 APC visit codes would be identical.

For non-network hospitals, under the TTPAs, the APC payment level for the five clinic and ER visit APCs would be set at 140 percent of the Medicare APC level in the first year of OPPS implementation. In the second year, the APC payment levels would be set at 125 percent of the Medicare APC level for clinic and ER visits. In the third year, the APC visit amounts would be set at 110 percent of the Medicare APC level for clinic and ER visits. In the fourth year, the TRICARE and Medicare payment levels for the 10 APC visit codes would be identical.

Two sets of adjustment factors (i.e., one for clinic visits and the other for ER visits) are being used since revenue cuts for ER visits are generally greater than those associated with clinic visits. Transitional payment adjustments for these 10 visit codes will buffer the initial revenue reductions which will be experienced upon implementation of TRICARE's OPPS, providing hospitals with sufficient time to adjust and budget for potential revenue reductions for hospitals most vulnerable to implementation of OPPS.

An additional temporary military contingency payment adjustment (TMCPA) will also be available at the discretion of the Director, TRICARE Management Activity, or a designee, under provisions of this rule to adopt, modify, and/or extend temporary adjustments to OPPS payments for TRICARE network hospitals deemed essential for military readiness and support during contingency operations. If at any time following implementation it is determined by the TMA Director, or designee, that it is impracticable to support military readiness or contingency operations by making TRICARE's OPPS payments in accordance with the same reimbursement rules implemented by Medicare, a temporary deviation may be granted. This will ensure the availability of adequate civilian healthcare resources necessary to meet all ongoing military readiness and contingencies. The locality-based reimbursement rate waiver process under the CHAMPUS Maximum Allowable Charge (CMAC) methodology will be used as a model for considering TMCPA. This will allow for reimbursement of higher payment rates for healthcare services that would otherwise be allowable, if it is determined necessary to ensure adequate provider networks essential for military readiness and contingency operations. For example, it might be determined that the initial TTPA of 200 percent for ER visits in a particular hospital is not sufficient to ensure network adequacy and as a result, an additional TMCPA of 25 percent, (i.e., 225 percent of the OPPS rate for ER visits) would be necessary to support military contingency operations. The higher rate will be authorized only if all reasonable efforts have been exhausted in attempting to create an adequate network, and it is cost-effective and

appropriate to pay the higher rate to ensure an appropriate mix of primary care and specialists in the network. For this purpose, such evidence may include consideration of the number of providers in the locality who provide the affected services, the mix of primary/specialty providers needed to meet patient access standards, the number of TRICARE beneficiaries in the locality, and the availability of Military Treatment Facility providers and any other factors the TMA Director, or designee determines relevant. If it is determined that the availability of an adequate number and mix of qualified healthcare providers in a network is not found, the Director TRO (DTRO) shall conduct a thorough analysis and forward recommendations with a cost estimate for approval to the TMA Director, or designee, through the TMA Contracting Officer (CO) for coordination. Those who can apply for the TMCPAs are: The DTRO; providers through the DTRO; Managed Care Support Contractors (MCSCs) through the DTRO; and Military Treatment Facilities (MTFs) through the DTRO. The TMA Director or designee is the final approval authority for TMCPAs. TMCPAs will generally be granted for up to 3 years, after which time hospitals may reapply for subsequent 3-year periods based on current utilization and access data. It is anticipated that the duration between publication of the final rule and TRICARE OPPS implementation will provide sufficient time for hospital's to apply and receive a final approval determination by the Director, TMA or designee. The procedures that are to be followed when submitting a TMCPA request will be outlined in the TRICARE Reimbursement Manual.

TMCPAs may also be extended to non-network hospitals on a case-by-case basis for specific procedures where it is determined that the procedures cannot be obtained timely enough from a network hospital. For such case-by-case extensions, ''Temporary'' might be less than three years at the discretion of the TMA Director, or designee.

VII. Regulatory Impact Analysis

A. Overall Impact

The Department of Defense has examined the impacts of this final rule as required by Executive Order 12866 (September 1993, Regulatory Planning and Review), the Regulatory Flexibility Act (RFA) (September 19, 1980, Pub. L. 96–354), the Unfunded Mandates Reform Act of 1995 (Pub. L. 104–4), and the Congressional Review Act (5 U.S.C. 804(2)).

1. Executive Order 12866

Executive Order 12866 (as amended by Executive Order 13258) directs agencies to assess all costs and benefits of available regulatory alternatives and, if regulation is necessary, to select regulatory approaches that maximize net benefits (including potential economic, environmental, public health and safety effects, distributive impacts, and equity). A regulatory impact analysis (RIA) must be prepared for major rules with economically significant effects ($100 million or more in any 1 year).

We estimate that the effects of the TRICARE OPPS provisions that would be implemented by this rule would result in hospital revenue reductions exceeding $100 million in any 1 year. We estimate the total reduction (from the proposed changes in this rule) in hospital revenue under the OPPS for its first year of implementation (assumed for purposes of this RIA to be April 1, 2009–March 31, 2010) from revenue in the same period without the proposed OPPS changes to be approximately $460 million.

We estimate that this rulemaking is ''economically significant'' as measured by the $100 million threshold, and hence also a major rule under the Congressional Review Act. Accordingly, we have prepared a Regulatory Impact Analysis that, to the best of our ability, presents the costs and benefits of the rulemaking.

2. Congressional Review Act, 5 U.S.C. 801

Under the Congressional Review Act, a major rule may not take effect until at least 60 days after submission to Congress of a report regarding the rule. A major rule is one that would have an annual effect on the economy of $100 million or more or have certain other impacts. This final rule is a major rule under the Congressional Review Act. As noted above, the estimated total reduction in hospital revenue under the OPPS for its first year of implementation from revenue in the same period without the proposed OPPS changes is approximately $460 million.

3. Regulatory Flexibility Act (RFA)

The RFA requires agencies to analyze options for regulatory relief of small businesses if a rule has a significant impact on a substantial number of small entities. For purposes of the RFA, small entities include small businesses, nonprofit organizations, and small governmental jurisdictions. Most hospitals, other providers, ASCs, and other suppliers are considered to be small entities, either by being nonprofit organizations or by meeting the Small Business Administration (SBA) definition of a small business (having revenues of $31.5 million or less in any 1 year). For purposes of the RFA, we have determined that all hospitals would be considered small entities according to the SBA size standards. Individuals and States are not included in the definition of a small entity. Therefore, the Secretary has determined that this final rule would have a significant impact on a substantial number of small entities. We generally prepare a final regulatory flexibility analysis that is consistent with the RFA (5 U.S.C. section 604), unless we certify that the final rule would not have a significant impact on a substantial number of small entities. The Regulatory Impact Analysis as well as the contents contained in the preamble is meant to serve as the Final Regulatory Flexibility Analysis.

Public comments were received during the proposed rule (73 FR 17271) comment period which resulted in substantive changes in hospital-based PHP reimbursement (i.e., reimbursement of a single per diem based on a minimum of three service units and payment of PHP professional services outside the per diem) and provided clarification regarding the Agency's revised transitional plan. Under this revised plan, temporary transitional payment adjustments will now apply to both network and non-network hospitals even though the transitional percentage adjustments for non-network hospitals will be less than those for network hospitals thereby continuing to ensure incentives for network participation. The duration of the temporary transitional payment adjustments (TTPAs) has also been extended for an additional year (four years for network hospitals and 3 years for non-network hospitals). The TTPA process will be administratively practicable while at the same time ensuring the stop-loss protection to allow hospitals the necessary time to adjust and budget for potential revenue reductions. Clarification was also provided regarding temporary contingency payment adjustments (TMPCAs) available under the TRICARE OPPS which will ensure network adequacy deemed essential for military readiness and support during contingency operations. Since all hospitals were considered small entities as part of the Regulatory Impact Analysis the above revisions and clarifications will have a significant

impact on a substantial number of small entities.

4. Unfunded Mandates

Section 202 of the Unfunded Mandates Reform Act of 1995 (UMRA) also requires that agencies assess anticipated costs and benefits before issuing any rule whose mandates require spending in any 1 year of $100 million in 1995 dollars, updated annually for inflation. That threshold level is currently approximately $130 million. This final rule will not mandate any requirements for State, local, or tribal governments.

5. Public Law 96–511, ''Paperwork Reduction Act'' (44 U.S.C. Chapter 35)

This rule will not impose significant additional information collection requirements on the public under the Paperwork Reduction Act of 1995 (44 U.S.C. 3501–3511). Existing information collection requirements of the TRICARE and Medicare programs will be utilized. We don't anticipate any increased costs to hospitals because of paperwork, billing or software requirements since we are adopting Medicare's billing/coding requirements; i.e., hospitals will be coding and filing claims in the same manner as they currently are with Medicare.

6. Executive Order 13132, ''Federalism''

This rule has been examined for its impact under E.O. 13132 and it does not contain policies that have federalism implications that would have substantial direct effects on the States, on the relationship between the national government and the States, or on the distribution of power and responsibilities among the various levels of government; therefore, consultation with State and local officials is not required.

B. Hospitals Included In and Excluded From TRICARE's OPPS

The outpatient prospective payment system encompasses nearly all hospitals that participate in the TRICARE program. However, Maryland hospitals that are paid under a cost containment waiver are excluded from the OPPS. In addition, Critical Access Hospitals (CAHs), Children's hospitals, Inpatient Rehabilitation Facilities (IRFs), Long Term Care hospitals (LTCHs), and Cancer hospitals are excluded from the OPPS.

C. Analysis of the Impact of Policy Changes on Payment Under TRICARE's OPPS

1. Alternatives Considered

Alternatives that we considered, the proposed changes that we will make, and the reasons that we have chosen each option are discussed below.

(a) Alternatives Considered for Addressing Reduction in Payments for ER Visits

Analysis of the effects of the proposed OPPS policies indicate that by type of service, the greatest reductions in hospital payments would occur for the facility charges associated with ER visits and other visits. Table 1 provides our projection of the effect of OPPS on hospital payments by type of service without any transition payments. It shows that of the projected $598 million reduction in hospital payments (before transition payments), over one-half of that reduction would come from reduced payments for the facility charges associated with ER visits and other hospital clinic visits. This reduction far exceeds the reductions for all other services. In reviewing the other types of services affected by OPPS, with four exceptions there are either increases in payments under OPPS (surgeries) or very small decreases in aggregate payments (defined as less than 1 percent of projected current policy allowed amounts—equal to $18 million—which is the case for J-codes and other HCPCS codes). The four exceptions are: (1) Radiology/pathology services, for which the OPPS payments are projected to equal over 80 percent of current policy allowed amounts; (2) other medical services (non-visits, including cardiology tests) for which the OPPS payments are projected to equal two-thirds of current policy allowed amounts; (3) supplies, which under OPPS will be bundled into other APCs or be coded for payment; and (4) ''facility dump codes'', which are services that TRICARE has reimbursed under TRICARE code 99088 (this code is used by claims processors to represent services that are either billed without a CPT code or have revenue codes that the claims processor has coded as 99088). We project that 87 percent of current policy allowed amounts for these facility ''dump codes'' will be reimbursed under OPPS.

Because the majority of the impact of OPPS on hospital payments will occur for facility charges for visits (ER and hospital clinic visits), we examined options to phase in the impact of OPPS for these services. Primary care and emergency room visits to hospital outpatient departments are categorized into 10 main codes (APC codes 604–609 and 613–616). For most hospitals, the largest reductions under OPPS occur for these 10 codes, especially the ER visit codes. We considered a number of alternatives to address this impact as part of the transition to the Medicare APC level. One alternative was to set the TRICARE APC levels at a higher level than the Medicare APCs during a three-year transition period (in the fourth year all TRICARE APC payments would be at the Medicare APC level). Because of TRICARE's interest in establishing and preserving a network of hospitals, this option would apply to only hospitals in the TRICARE network. Under this option, we set the first-year TRICARE APC levels at 150 percent of the Medicare APC levels for the ER codes (APCs 609, 613, 614, 615, and 616) and at 130 percent of the Medicare APC levels for the hospital clinic visit codes (APCs 604–608). These percentages would apply to the first year of implementation and lower percentages would apply to the second and third years of implementation. By year four, the TRICARE APC levels would be equal to the Medicare APC levels. Even though this option increased the level of hospital payments, we did not choose this option because it would still result in a reduction in hospital payments for ER and hospital clinic visits of over 50 percent.

A second option we considered was identical to the first with two exceptions. First, it would increase the year-one level of the TRICARE APC payments for the 10 ER visits and clinic visits codes identified above (APCs 604–609 and 613–616) to 200 percent of the Medicare APC values for the five ER visit codes and to 175 percent of the Medicare APC values for the five hospital clinic visit codes. A second difference is that the transition would be lengthened from three years to four years (i.e., the Medicare APC levels would not be reached for these 10 codes until the start of the fifth year of implementation). Although this option would result in higher hospital payments than the first option, we did not choose this option because it would still represent over a 40 percent reduction in ER and clinic visit payments in the first year of implementation.

A third option we considered and the one we are proposing in this OPPS rule is identical to the second option except that it would extend transition payments for the 10 ER and hospital clinic visit codes to non-network hospitals. Thus, all hospitals would receive higher payments for the 10 visit

codes. As shown in Table 2, this option would set the TRICARE APC levels in the first year of implementation at 140 percent of the Medicare APC level for non-network hospitals for all 10 codes. Even though the transition payments are lower for non-network hospitals than network hospitals, this option provides increased payments for all hospitals with ER and/or hospital clinic visits. We selected this option because we found that it reduced the overall impact of OPPS to about 25 percent of current-policy allowed amounts, because it led to a reduction in hospital payments for ER and clinic visit in the first year of less than 40 percent, and because it would relieve the impact on all hospitals with ER and/or hospital clinic visits. We refer to these payments as temporary transitional payment adjustments (TTPAs). The impact is shown in Table 3.

(b) Alternatives Considered for Addressing Hospitals With a High Concentration of TRICARE Patients

We were concerned there might be access problems at some hospitals with a high concentration of TRICARE patients if their HOPD payments were decreased significantly. In particular, we were concerned that some hospitals might leave the TRICARE network if HOPD payments were reduced too quickly. Under this option, network hospitals which rely on TRICARE for 20 percent or more of their HOPD revenues would be paid APC amounts that are above the Medicare APC levels. We focussed on network hospitals because many of the hospitals with a high level of TRICARE patients are network hospitals. Under this option, each network hospital would provide documentation to TRICARE that they were reliant on TRICARE for 20 percent or more of their HOPD revenues and the TRICARE fiscal intermediaries would then increase their APC payment by a percentage amount (we assumed by 7 percent).

This option would potentially affect the roughly 1,700 TRICARE network hospitals. We estimate that about one-third of the largest 200 TRICARE network hospitals would meet the criteria that the TRICARE allowed amounts under current policy be greater than or equal to 20 percent or more of their total HOPD revenues. If OPPS payments were increased by 7 percent for these hospitals, it would increase TRICARE payments by about $20 million per year. There would also be administrative costs associated with verifying that hospitals relied on TRICARE for more than 20 percent of their revenue. We did not choose this option because we did not think it was sufficiently targeted to access problems. In addition, many of these TRICARE-reliant hospitals may be benefited significantly by the increase in ER payments under the TTPAs.

A second option we considered and the one we are proposing in this OPPS rule is to provide three-year transitional payments adjustments for TRICARE network hospitals if they are deemed essential for military readiness and support during contingency operations. Under this option, temporary military contingency payment adjustments (TMCPAs) would be granted if TRICARE determines that it is necessary to ensure adequate Preferred Provider networks. It might be determined that the initial TTPA of 200 percent for ER visits in a particular hospital is not sufficient to ensure network adequacy and as a result, an additional TMCPA of 25 percent, (i.e., 225 percent of the OPPS rate for ER visits) would be necessary to support military contingency operations. The higher rate will be authorized only if all reasonable efforts have been exhausted in attempting to create an adequate network and TRICARE determines that it is cost-effective and appropriate to pay the higher rate to ensure an appropriate mix of primary care and specialists in the network. For this purpose, such evidence many include consideration of the number of providers in the locality who provide the affected services, the mix of primary/specialty providers needed to meet patient access standards, the number of TRICARE beneficiaries in the locality, and the availability of Military Treatment Facility providers and any other factors the TMA Director, or designee determines relevant.

(c) Alternatives Considered for Addressing All Services

We also considered options for increasing all APC payments above the Medicare APC levels. Under this option, TMA would have a four-year phase-in of OPPS. In the first year, hospitals would have their HOPD payments based on 25 percent of the OPPS amount and 75 percent of the amount that they would have been reimbursed under current policy. In the second, third, and fourth years, the percentage paid according to OPPS would increase to 50 percent, 75 percent, and 100 percent, respectively.

We did not select this option for two reasons. First, we think that for many services, this option would provide little benefit to hospital providers. For example, for surgeries, which would be paid more under OPPS than under current policy, this option would be administratively complex and not provide relief to hospitals (in fact, it would lower their payments). In addition, this option would be administratively cumbersome and costly, because it would require the FIs to process each claim twice. We think it would increase administrative claims processing costs by over $15 million per year.

2. Methodology

We analyzed the impact of OPPS on hospital outpatient payments. Our analysis compares the payment impact of OPPS compared to current law. Current law reflects pre-OPPS payment methodologies in effect in October 2008 and assumed to continue prior to April 1, 2009 (the assumed date of implementation of OPPS for purposes of this RIA).

The data used in developing the quantitative analyses presented below are taken from charge and payment data from January 2007–June 2007 and the current TRICARE hospital provider file (prepared in September 2008). Our analysis has several qualifications. First, we draw upon various sources for the data used to categorize hospitals in Table 4, below. In some cases, there is a degree of variation in the data from the different sources. We have attempted to construct these variables with the best available source overall having information from TMA's provider file, as well as Medicare's POS and PSF provider files. For individual hospitals, however, some miscategorizations are possible. In addition, we were unable to match some hospital claims data to the provider file.

Using charge data from 2007, we simulated payments using the pre-OPPS and OPPS payment methodologies. Both pre-OPPS and OPPS payment estimates include operating and capital costs. The excluded Maryland hospitals and the other excluded hospital types (CAHs, IRFs, LTCHs, and Cancer hospitals) were not included in the simulations.

We also trimmed extremely low charges per unit (under $10) from the impact analysis because we believe the data to be unreliable. Inclusion of claims with billed and allowed charges under $10 would not allow us to assess the impacts among the various classes of hospitals accurately, as they likely have errors in dollar amounts or units.

After we removed the excluded Maryland hospitals, the claims with low payments, and hospitals for which we could not assign payment and hospital classification variables, we used the remaining hospitals as the basis for our analysis.

3. Limitations of Our Analysis

The distributional impacts presented here are the projected effects of the proposed policy changes on various hospital groups. We present results only for hospitals whose claims were used for modeling the impacts shown in Table 4 below. We do not show proposed hospital-specific impacts for hospitals whose claims we were unable to use or hospital claims that could not be matched to the provider file. As discussed in this rule, LTCHs, IRFs, CAHs, Children's hospitals, Cancer hospitals and hospitals in Maryland are exempt from this rule and are excluded from Table 4.

We estimate the effects of the proposed policy changes by estimating the effects on payments per service, while holding all other payment policies constant. We use the best data available but do not attempt to predict behavioral responses to our proposed policy changes, with one exception: We assumed that 25 percent of supply services would not be bundled into other APC payments and that hospitals would likely recode these supplies into CPT codes that would be reimbursed separately. Although we make projections of the change in payments per service (to reflect inflation in billed charges and APC amounts) we do not make adjustments for future changes in variables such as service volume, service-mix, or number of encounters.

One behavioral change that we did not model is the change in hospital discounts. We know that many network hospitals currently provide discounts for both inpatient and outpatient services. For this RIA, we assumed that all the outpatient discounts would be eliminated. We also know that many of the inpatient discounts will also be eliminated, although we did not include that impact in the RIA. Thus, the RIA overstates the impact on hospital payments, especially for these network hospitals that will reduce or eliminate their inpatient discounts in order to reduce the impact of the OPPS change on their revenues.

A second impact that is not included in this RIA is the impact of the TMCPA payments. We did not attempt to estimate which hospitals would receive these payments or the level of the payments. Thus, the RIA overstates the impact on hospital payments, particularly for hospitals that would receive TMCPA payments.

4. Effects on Hospitals

Table 4, Impact of TRICARE Hospital Outpatient Prospective Payment System (OPPS), below, demonstrates the results of our analysis. The table categorizes hospitals by various geographic and special payment consideration groups to illustrate the varying impacts on different types of hospitals. The first column represents the number of hospitals in each category. The second column shows the impact of the OPPS excluding the transition payments. It shows the percentage of the projected current policy allowed amounts for HOPD facility charges that would be paid under OPPS without transition payments. The third column shows the impact of the OPPS including the transition payments.

The first row of Table 4 shows the overall impact on the 3,754 hospitals included in the analysis. We included as much data as possible to the extent that we were able to capture all the provider information necessary to determine payment. Our estimates include the same set of services for both pre-OPPS (current policy) and OPPS payments so that we could determine the impact of the OPPS as accurately as possible. Because payment under OPPS can only be determined if bills are accurately coded, the data upon which the impacts were developed do not reflect all hospital outpatient services from January 2007 to June 2007, but only those that were coded using valid HCPCS codes.

The next three rows of the table contain hospitals categorized according to their geographic location (urban and rural). We include 2,469 hospitals located in urban areas (MSAs) in our analysis. In addition, we include 1,285 hospitals located in rural areas in our analysis. The next two groupings are by bed-size categories, shown separately for urban and rural hospitals.

We then show the distribution by the TRICARE-network status of hospitals, as of the date of the service (January–June 2007). We then show the distribution of urban and rural hospitals by regional census divisions. The final category groups hospitals according to whether or not they have residency programs (teaching hospitals that receive an indirect medical education (IME) adjustment).

Column 2 of Table 4 compares our estimate of OPPS payments without application of the transition payments, but incorporating policy changes, to our estimate of payments under the current system. It shows the percentage of allowed amounts for HOPD services paid under OPPS as a percentage of the allowed amounts for HOPD services paid under current policy. The impact is shown for the period from April 1, 2009–March 31, 2010.

Column 3 presents the percentage of allowed amounts paid under OPPS after application of the transition payments to our estimate of allowed amounts under the pre-OPPS system (current policy). The differences between the pre-OPPS and the OPPS payment reflect the combined impact of the transition payment adjustments and distributional differences attributable to variation in charge structures among hospitals. It also presents our assumption about the growth in payments prior to OPPS (billed charges for services subject to the OPPS are assumed to increase by 7 percent per year) and in APC payments (assumed to increase by 3.3 percent per year).

We estimate that in the April 2009–March 2010 period, payments to hospitals for their HOPD facility charges will decrease by 25 percent under the OPPS compared to the pre-OPPS payments. This includes the impact of the transition payments. The values in Table 4 differ slightly from those in Table 3 because not all hospital payments are included in Table 4 due to the issues discussed above.

For all groups of hospitals, payments under the OPPS without the transition payments are below current policy payments for HOPD facility charges. For all of these hospital groups, the transition payments mitigate this impact. The following discussion highlights some of the changes in payments among hospital classifications.

Payment to urban and rural hospitals would decrease substantially without the transition payments (24 percent for rural and 35 percent for urban hospitals). These hospitals experience a decline in payments even with the transition payments (11 percent and 24 percent for rural and urban hospitals, respectively).

Teaching hospitals, whose payments would decrease by 33 percent without the transition payments, have much of these losses offset by the transition payments.

The transition payments have a major impact on TRICARE networks hospitals. It increases the percentage of current policy allowed amounts paid for HOPD facility charges from 67 percent without the transition payments to 80 percent with the transition payments. The transition payments also increase the percentage of current policy allowed amounts paid under OPPS to small and rural hospitals. Under OPPS with the transition payments sole community hospitals will receive over 90 percent of the current policy amounts. Small rural hospitals will also receive over 90 percent of current policy amounts.

If the effect of the transition payments were removed, differences between pre-OPPS payments and OPPS payments among hospitals would still exist. These distributional differences are the result of many factors. First, charge structure variations result in differences between pre-OPPS payments and OPPS payments. Hospitals whose charges are low relative to payment would gain under the OPPS even without the transition payments.

TABLE 1—ESTIMATED IMPACT OF TRICARE OPPS ON HOSPITALS DURING THE APRIL 1, 2009–MARCH 31, 2010 PERIOD

(Assuming no transition payments (In $ millions))

Category of hospital outpatient service	(1) Estimated allowed amounts under current policy	(2) OPPS allowed amounts as a percent of current policy allowed amounts	(3) OPPS allowed amounts	(4) Reduction in allowed amounts (1)–(3)
Surgeries	$406	102%	$413	($7)
Radiology/Pathology	298	82%	245	53
Visits (ER and Other)	516	35%	180	336
Other Medical (non-visits)	192	66%	127	65
J-codes	34	81%	27	7
Other HCPCS codes	20	43%	8	12
Supplies	146	25%	37	109
Facility ''Dump Codes''	177	87%	154	23
Total	1,789	67%	1,191	598

Note: (1) This table does not include any transition payments to hospitals.
(2) This table does not include the impact of reduced hospital discounts for inpatient services.
(3) 75 percent of supplies are assumed to be bundled into other APC payments. We assume that providers will recode the other 25 percent of supply costs (such as J-codes, A-codes, etc.) and will be paid.
(4) Excluded hospitals such as Maryland hospitals, Children's, LTCH, IRFs, and CAHs are excluded from this table. Services not affected by OPPS (like clinical laboratory and rehab therapy) are not included.
(5) Facility ''dump codes'' are services that have been reimbursed by TRICARE under CPT 99088.

TABLE 2—TRANSITION SCHEDULE FOR 10 VISIT CODES, BY TYPE OF VISIT CODE AND NETWORK STATUS OF HOSPITAL

(TRICARE APC as a percent of Medicare APC)

	Network		Non-network	
	ER	Hospital clinic	ER	Hospital clinic
Yr 1	200%	175%	140%	140%
Yr 2	175%	150%	125%	125%
Yr 3	150%	130%	110%	110%
Yr 4	130%	115%	100%	100%
Yr 5	100%	100%	100%	100%

Note: 10 codes are APC codes 604–609 and 613–616.

TABLE 3—ESTIMATED IMPACT OF TRICARE OPPS ON HOSPITALS DURING THE APRIL 1, 2009–MARCH 31, 2010 PERIOD

(With transition payments (in $ millions))

Category of hospital outpatient service	(1) Estimated allowed amounts under current policy	(2) OPPS allowed amounts as a percent of current policy allowed amounts	(3) OPPS allowed amounts	(4) OPPS allowed amounts with transition payment	(5) Reduction in allowed amounts (1)–(4)
Surgeries	$406	102%	$413	$413	($7)
Radiology/Pathology	298	82%	245	245	53
Visits (ER and Other)	516	35%	180	320	196
Other Medical (non-visits)	192	66%	127	127	65
J-codes	34	81%	27	27	7
Other HCPCS codes	20	43%	8	8	12
Supplies	146	25%	37	37	109
Facility ''Dump Codes''	177	87%	154	154	23
Total	1,789	67%	1,191	1,331	458

Note: (1) This table includes the impact of the TTPA payments to hospitals.
(2) This table does not include the impact of reduced hospital discounts for inpatient services.
(3) 75 percent of supplies are assumed to be bundled into other APC payments. We assume that providers will recode the other 25 percent of supply costs (such as J-codes, A-codes, etc.) and will be paid.

(4) Excluded hospitals such as Maryland hospitals, Children's, LTCH's, IRFs, and CAHs are excluded from this table. Services not affected by OPPS (like clinical laboratory and rehab therapy) are not included.

(5) Facility ''dump codes'' are services that have been reimbursed by TRICARE under CPT 99088.

(6) First-year transition for network hospitals is equal to 200% of Medicare APC for 5 ER visit codes and 175% of Medicare APC amounts for 5 hospital clinic visit codes. For non-network hospitals, the first-year transition is 140% of Medicare amounts for both the 5 ER and the 5 hospital clinic visit codes.

TABLE 4—FIRST-YEAR IMPACT OF TRICARE HOSPITAL OUTPATIENT PROSPECTIVE PAYMENT SYSTEM (OPPS)

[Percentage of current policy allowed amounts paid under OPPS]

	(1) Number of hospitals	(2) OPPS Effect on OP payments (Without transition payments) (percent)	(3) OPPS Effect on OP payments (with transition payments) (percent)
ALL HOSPITALS	3,754	66.2	77.2
URBAN HOSPITALS	2,469	64.7	75.5
RURAL HOSPITALS			
Sole Community	646	79.3	91.5
Other Rural	639	72.7	86.6
BEDS (URBAN)			
0–99 Beds	630	71.5	83.1
100–199 Beds	804	63.0	77.1
200–299 Beds	458	63.8	74.0
300–499 Beds	395	65.5	74.7
500+ Beds	182	64.2	71.3
BEDS (RURAL)			
0–49 Beds	595	76.6	91.3
50–100 Beds	438	75.6	87.6
101+ Beds	252	75.9	89.1
NETWORK STATUS			
Network	1,671	66.6	79.9
Non-Network	2,083	64.7	67.7
REGION (URBAN)			
New England	116	76.7	101.0
Middle Atlantic	341	63.1	75.9
South Atlantic	359	59.4	73.6
East North Cent	409	70.0	83.8
East South Cent	160	63.4	75.1
West North Cent	159	76.3	78.5
West South Cent	360	60.4	74.0
Mountain	153	72.8	74.1
Pacific	363	70.8	71.9
Puerto Rico	49	71.8	74.7
REGION (RURAL)			
New England	41	81.9	97.1
Middle Atlantic	75	80.3	105.3
South Atlantic	185	73.5	89.9
East North Cent	181	78.3	89.1
East South Cent	200	69.8	87.7
West North Cent	207	87.0	92.5
West South Cent	219	69.5	86.8
Mountain	116	75.1	76.5
Pacific	61	78.6	83.1
TEACHING STATUS			
Non-Teaching	2,719	65.6	77.5
Teaching	1,035	66.9	76.7

List of Subjects in 32 CFR Part 199

Claims, Dental health, Healthcare, Health insurance, Individuals with disabilities, Military personnel.

■ Accordingly, 32 CFR Part 199 is amended as follows:

PART 199—[AMENDED]

■ 1. The authority citation for Part 199 continues to read as follows:

Authority: 5 U.S.C. 301; 10 U.S.C. Chapter 55.

■ 2. Paragraph 199.2(b) is amended by adding definitions for ''Ambulatory Payment Classifications (APCs)'' and ''TRICARE Hospital Outpatient Prospective Payment System (OPPS)'' and placing them in alphabetical order to read as follows:

§ 199.2 Definitions.

* * * * *

(b) * * *

Ambulatory Payment Classifications (APCs). Payment of services under the TRICARE OPPS is based on grouping outpatient procedures and services into ambulatory payment classification groups based on clinical and resource homogeneity, provider concentration, frequency of service and minimal

opportunities for upcoding and code fragmentation. Nationally established rates for each APC are calculated by multiplying the APC's relative weight derived from median costs for procedures assigned to the APC group, scaled to the median cost of the APC group representing the most frequently provided services, by the conversion factor.

* * * * *

TRICARE Hospital Outpatient Prospective Payment System (OPPS). OPPS is a hospital outpatient prospective payment system, based on nationally established APC payment amounts and standardized for geographic wage differences that includes operating and capital-related costs that are directly related and integral to performing a procedure or furnishing a service in a hospital outpatient department.

* * * * *

§ 199.4 [Amended]

■ 3. Section 199.4 is amended by removing paragraph (c)(3)(i)(C)(*1*) and redesignating paragraphs (c)(3)(i)(C)(*2*) and (c)(3)(i)(C)(*3*) as (c)(3)(i)(C)(*1*) and (c)(3)(i)(C)(*2*).

■ 4. Section 199.14 is amended by revising paragraphs (a)(2)(ix)(A); redesignating paragraphs (a)(5)(i) through (a)(5)(xii) as (a)(5)(i)(A) through (a)(5)(i)(L); adding the following new paragraphs (a)(5)(i) and (a)(5)(ii); and revising paragraph (d)(1) to read as follows:

§ 199.14 Provider reimbursement methods.

(a) * * *

(2) * * *

(ix) * * *

(A) *In general*. Psychiatric and substance use disorder rehabilitation partial hospitalization services authorized by § 199.4(b)(10) and (e)(4) and provided by institutional providers authorized under § 199.6 (b)(4)(xii) and (b)(4)(xiv) are reimbursed on the basis of prospectively determined, all-inclusive per diem rates pursuant to the provisions of paragraph (a)(2)(ix)(C) of this section, with the exception of hospital-based psychiatric and substance use disorder rehabilitation partial hospitalization services which are reimbursed in accordance with provisions of paragraph (a)(5)(ii) of this section. The per diem payment amount must be accepted as payment in full for all institutional services provided, including board, routine nursing service, ancillary services (includes music, dance, occupational and other such therapies), psychological testing and assessment, overhead and any other services for which the customary practice among similar providers is included as part of the institutional charges.

* * * * *

(5) * * *

(i) *Outpatient Services Not Subject to Hospital Outpatient Prospective Payment System (OPPS).* The following are payment methods for outpatient services that are either provided in an OPPS exempt hospital or paid outside the OPPS payment methodology under existing fee schedules or other prospectively determined rates in a hospital subject to OPPS reimbursement.

* * * * *

(ii) *Outpatient Services Subject to OPPS*. Outpatient services provided in hospitals subject to Medicare OPPS as specified in 42 CFR 413.65 and 42 CFR § 419.20 will be paid in accordance with the provisions outlined in sections 1833(t) of the Social Security Act and its implementing Medicare regulation (42 CFR Part 419) subject to exceptions as authorized by § 199.14(a)(5)(ii). Under the above governing provisions, CHAMPUS will recognize to the extent practicable, in accordance with 10 U.S.C. 1079(j)(2), Medicare's OPPS reimbursement methodology to include specific coding requirements, ambulatory payment classifications (APCs), nationally established APC amounts and associated adjustments (e.g., discounting for multiple surgery procedures, wage adjustments for variations in labor-related costs across geographical regions and outlier calculations). While CHAMPUS intends to remain as true as possible to Medicare's basic OPPS methodology, there will be some deviations required to accommodate CHAMPUS' unique benefit structure and beneficiary population as authorized under the provisions of 10 U.S.C. 1079(j)(2). Temporary transitional payment adjustments (TTPAs) will be in place for all hospitals, both network and non-network in order to buffer the initial decline in payments upon implementation of TRICARE's OPPS. For network hospitals, the temporary transitional payment adjustments (TTPAs) will cover a four-year period. The four-year transition will set higher payment percentages for the ten Ambulatory Payment Classification (APC) codes 604–609 and 613–616, with reductions in each of the transition years. For non-network hospitals, the adjustments will cover a three year period, with reductions in each of the transition years. For network hospitals, under the TTPAs, the APC payment level for the five clinic visit APCs would be set at 175 percent of the Medicare APC level, while the five ER visit APCs would be increased by 200 percent in the first year of OPPS implementation. In the second year, the APC payment levels would be set at 150 percent of the Medicare APC level for clinic visits and 175 percent for ER APCs. In the third year, the APC visit amounts would be set at 130 percent of the Medicare APC level for clinic visits and 150 percent for ER APCs. In the fourth year, the APC visit amounts would be set at 115 percent of the Medicare APC level for clinic visits and 130 per cent for ER APCs. In the fifth year, the TRICARE and Medicare payment levels for the 10 APC visit codes would be identical.

For non-network hospitals, under the TTPAs, the APC payment level for the five clinic and ER visit APCs would be set at 140 percent of the Medicare APC level in the first year of OPPS implementation. In the second year, the APC payment levels would be set at 125 percent of the Medicare APC level for clinic and ER visits. In the third year, the APC visit amounts would be set at 110 percent of the Medicare APC level for clinic and ER visits. In the fourth year, the TRICARE and Medicare payment levels for the 10 APC visit codes would be identical.

An additional temporary military contingency payment adjustment (TMCPA) will also be available at the discretion of the Director, TMA, or a designee, at any time after implementation to adopt, modify and/or extend temporary adjustments to OPPS payments for TRICARE network hospitals deemed essential for military readiness and deployment in time of contingency operations. Any TMCPAs to OPPS payments shall be made only on the basis of a determination that it is impracticable to support military readiness or contingency operations by making OPPS payments in accordance with the same reimbursement rules implemented by Medicare. The criteria for adopting, modifying, and/or extending deviations and/or adjustments to OPPS payments shall be issued through CHAMPUS policies, instructions, procedures and guidelines as deemed appropriate by the Director, TMA, or a designee. TMCPAs may also be extended to non-network hospitals on a case-by-case basis for specific procedures where it is determined that the procedures cannot be obtained timely enough from a network hospital. For such case-by-case extensions, ''Temporary'' might be less than three

years at the discretion of the TMA Director, or designee.

* * * * *

(d) * * *

(1) *In general.* CHAMPUS pays institutional facility costs for ambulatory surgery on the basis of prospectively determined amounts, as provided in this paragraph, with the exception of ambulatory surgery procedures performed in hospital outpatient departments, which are to be reimbursed in accordance with the provisions of paragraph (a)(5)(ii) of this section. This payment method is similar to that used by the Medicare program for ambulatory surgery. This paragraph applies to payment for freestanding ambulatory surgical centers. It does not apply to professional services. A list of ambulatory surgery procedures subject to the payment method set forth in the paragraph shall be published periodically by the Director, TRICARE Management Activity (TMA). Payment to freestanding ambulatory surgery centers is limited to these procedures.

* * * * *

Dated: December 5, 2008.

Patricia Toppings,

OSD Federal Register, Liaison Officer, Department of Defense.

[FR Doc. E8–29251 Filed 12–5–08; 4:15 pm]

BILLING CODE 5001–06–P

DEPARTMENT OF HOMELAND SECURITY

Coast Guard

33 CFR Part 117

[USCG–2008–1124]

Drawbridge Operation Regulation; Long Island, New York Inland Waterway From East Rockaway Inlet to Shinnecock Canal, Hempstead, NY, Maintenance

AGENCY: Coast Guard, DHS.

ACTION: Notice of temporary deviation from regulations.

SUMMARY: The Commander, First Coast Guard District, has issued a temporary deviation from the regulation governing the operation of the Wantagh State Parkway Bridge across Sloop Channel at mile 15.4, at Jones Beach, New York. Under this temporary deviation the bridge may operate on a limited operating schedule for four months to facilitate the completion of bridge construction.

DATES: This deviation is effective from December 1, 2008 through April 1, 2009.

ADDRESSES: Documents indicated in this preamble as being available in the docket are part of docket USCG–2008–1124 and are available online at *www.regulations.gov.* They are also available for inspection or copying two locations: The Docket Management Facility (M–30), U.S. Department of Transportation, West Building Ground Floor, Room W12–140, 1200 New Jersey Avenue, SE., Washington, DC 20590, between 9 a.m. and 5 p.m., Monday through Friday, except Federal holidays, and the First Coast Guard District, Bridge Branch Office, 408 Atlantic Avenue, Boston, Massachusetts 02110, between 7 a.m. and 3 p.m., Monday through Friday, except Federal holidays.

FOR FURTHER INFORMATION CONTACT: Judy Leung-Yee, Project Officer, First Coast Guard District, at (212) 668–7165.

SUPPLEMENTARY INFORMATION: The Wantagh State Parkway Bridge has a vertical clearance in the closed position of 16 feet at mean high water. The existing drawbridge operation regulations are listed at 33 CFR 117.5.

The New York State Department of Transportation requested a temporary deviation to facilitate the completion of bridge construction and to accommodate holiday work schedule.

The waterway has seasonal recreational vessels and fishing vessels of various sizes.

We contacted the New York Marine Trades Association and Station Jones Beach. No objection to the proposed temporary deviation schedule was received.

Under this temporary deviation, in effect from December 1, 2008 through April 1, 2009, the Wantagh State Parkway Bridge at mile 15.4, across Sloop Channel, shall operate as follows:

From Monday through Friday the bridge shall open on signal at 6:30 a.m. and 4 p.m. after at least a 30-minute advance notice is given. From 4 p.m. to 6:30 a.m. the bridge shall open on signal after at least a two-hour advance notice is given.

From Friday, 4 p.m. through Monday, 6:30 a.m. the bridge shall open on signal after at least a two-hour advance notice is given.

At all other times including 24, 25, 31 December 2008 and 1 January 2009, the bridge need not open for marine traffic.

Advance notice may be given by calling (631) 383–6598.

In accordance with 33 CFR 117.35(e), the bridge must return to its regular operating schedule immediately at the end of the designated time period. This deviation from the operating regulations is authorized under 33 CFR 117.35.

Dated: December 1, 2008.

Gary Kassof,

Bridge Program Manager, First Coast Guard District.

[FR Doc. E8–29237 Filed 12–9–08; 8:45 am]

BILLING CODE 4910–15–P

DEPARTMENT OF THE INTERIOR

National Park Service

36 CFR Part 2

Fish and Wildlife Service

50 CFR Part 27

RIN 1024–AD70

General Regulations for Areas Administered by the National Park Service and the Fish and Wildlife Service

AGENCIES: Fish and Wildlife Service and National Park Service, Interior.

ACTION: Final rule.

SUMMARY: This final rulemaking amends regulations codified in 36 CFR part 2 and 50 CFR part 27, which pertain to the possession and transportation of firearms in national park areas and national wildlife refuges. The final rule updates these regulations to reflect state laws authorizing the possession of concealed firearms, while leaving unchanged the existing regulatory provisions that ensure visitor safety and resource protection such as the prohibitions on poaching and limitations on hunting and target practice.

DATES: This rule becomes effective on January 9, 2009.

FOR FURTHER INFORMATION CONTACT: Lyle Laverty, 202–208–4416.

SUPPLEMENTARY INFORMATION:

I. Background

America's parks and wildlife refuges are an important part of our shared national heritage, and a source of inspiration and enjoyment for visitors from around the world. For nearly 100 years, Congress has vested the Secretary of the Interior with the responsibility for managing these lands and resources in a manner that ensures their preservation and seeks to provide for the safety of visitors and employees. In administering these lands, Congress has enacted various statutes authorizing the Secretary to work closely with respective State and local governments in the management of these areas. In the following decades, the Department has worked closely with its State, local

government and Tribal neighbors, and has adopted regulations in appropriate circumstances that look to the laws of the state in which that unit is located. This final rule is intended to extend similar treatment to non-conflicting state laws pertaining to carrying of concealed weapons.

Forty-eight States currently authorize law-abiding citizens to carry concealed firearms. However, existing Federal regulations governing firearms in national parks and national wildlife refuges, promulgated before the vast majority of these state laws were in effect, unnecessarily preclude law-abiding citizens from possessing, carrying, or transporting a concealed firearm that is otherwise legal in that state.

On December 14, 2007, forty-seven United States Senators from both parties wrote to the Secretary of the Interior asking the National Park Service (NPS) and U.S. Fish and Wildlife Service (FWS) to ''remove their prohibitions on law-abiding citizens from transporting and carrying firearms on lands managed by these agencies'' by amending their regulations to allow ''firearms consistent with the state law where the National Park Service's sites and the National Wildlife Refuges are located.'' [1] The Senators observed that the ''regulations infringe on the rights of law-abiding gun owners'' and that the ''inconsistencies in firearms regulations for public lands are confusing, burdensome, and unnecessary.'' On February 11, 2008, four additional United States Senators wrote to the Secretary in support of the effort, adding that existing regulations ''preempt state regulatory frameworks for transporting and carrying firearms, thus invalidating concealed weapons permits and other state laws that allow law-abiding citizens to transport and carry firearms.'' [2]

The Department agrees with the 51 United States Senators that the regulations should be amended to reflect developments in state law, particularly where, as in this case, the deference can be achieved without impacting the visitors or resources the regulations are designed to protect. Accordingly, on April 30, 2008, the Department chose to address this issue proactively through the development of a proposed regulation, which it published in the **Federal Register** with a request for public comment. *See* 73 FR 23388 (April 30, 2008). The Department initially provided a sixty-day comment period and subsequently provided an additional 30-day comment period. The Department received more than 125,000 comments during the comment period and thereafter formed a working group to carefully review and analyze the submissions.

We believe that in managing parks and refuges we should, as appropriate, make every effort to give the greatest respect to the democratic judgments of State legislatures with respect to concealed firearms. As stated in the proposed rule, Federal agencies have a responsibility to recognize the expertise of the States in this area, and Federal regulations should be developed and implemented in a manner that respects ''state prerogatives and authority.'' *See* Executive Order 13132 of August 10, 1999 (''Federalism''). As explained herein, the Department believes that this rule more appropriately gives effect to these federalism concepts as called for in the Executive Order, while simultaneously maintaining protection of visitors and the values for which these parks and refuges were established. We discuss these considerations more fully below.

II. Discussion

A. Summary of the Final Rule

The regulations being amended by this rule are intended by the NPS and the FWS to protect the natural and cultural resources of park areas and refuges, and to protect visitors, employees and property within those lands. In their previous form, these regulations generally prohibited visitors from possessing an operable and loaded firearm in areas administered by these bureaus unless the firearm is used for lawful hunting activities, target practice in areas designated by special regulations, or other purposes related to the administration of Federal lands in Alaska. The previous regulations also allowed visitors to transport firearms through parks and refuges subject to limitations that generally required the firearm to be unloaded and rendered inoperable or inaccessible. See 48 FR 30282 (June 30, 1983); 49 FR 18444 (April 30, 1984).

The previous FWS and NPS regulations were last substantively updated in 1981 and 1983, respectively. The overwhelming majority of States now provide for the possession of concealed firearms by their citizens. In many States, the authority to carry loaded and operable concealed firearms extends to State park and refuge lands, whether expressly or by operation of law.

1. The Department's Purpose

The Department's intent in adopting this final rule is to better reflect the decisions of the States in which parks and refuge units are located to determine who may lawfully possess a firearm within their borders, while preserving the Federal government's authority to manage its lands, buildings, and other facilities. Mindful of that objective, the Department's final rule amends the regulations to allow individuals to carry concealed, loaded, and operable firearms in Federal park units and refuges to the extent that they could lawfully do so under non-conflicting state law. By adopting state law in this manner, this rule is similar in approach to that already taken by NPS and FWS in various regulations pertaining to hunting, fishing, motor vehicles and boating. Additionally, the final rule treats state law in a similar manner to regulations adopted by the Bureau of Land Management (BLM) and the United States Forest Service (USFS), both of which allow visitors to carry weapons consistent with applicable Federal and state laws. *See* 36 CFR 261.8 (a)–(c); 43 CFR 8365.1–7.

Under the final rule, individuals must have actual authority to possess those loaded and concealed firearms under state law in order to carry those loaded concealed firearms in Federal park areas and refuges. This means that the State in which the park or refuge unit is located must have laws that authorize the individual to possess those concealed and loaded firearms, and the individual must be so authorized. Additionally, to the extent that a State's law recognizes licenses issued by other States, including the applicability of reciprocity agreements, the final rule would similarly recognize such reciprocal authorities. Finally, individuals authorized to carry firearms under this rule will continue to be subject to all other applicable state and Federal laws. Accordingly, as stated in the preamble to the proposed rule, this rule does not authorize visitors to use

[1] *See* Letter to the Honorable Dirk Kempthorne, Secretary of the Interior, dated December 14, 2007, from Senators Crapo (ID), Baucus (MT), Craig (ID), Johnson (SD), Inhofe (OK), Tester (MT), Vitter (LA), Pryor (AR), Smith (OR), Lincoln (AR), Hatch (UT), Dorgan (ND), Coleman (MN), Nelson (NE), Coburn (OK), Webb (VA), Gregg (NH), Murkowski (AK), Ensign (NV), Sununu (NH), Stevens (AK), Bennett (UT), Chambliss (GA), Cochran (MS), Isakson (GA), Bunning (KY), Allard (CO), Thune (SD), Grassley (IA), Corker (TN), Lott (MS), Hutchison (TX), Roberts (KS), Martinez (FL), Cornyn (TX), Shelby (AL), Hagel (NE), Graham (SC), Dole (NC), Enzi (WY), McCain (AZ), Barrasso (WY), Brownback (KS), Domenici (NM), DeMint (SC), Sessions (AL), and Kyl (AZ). A copy of this letter may be accessed at *http://www.doi.gov/issues/response_to_senators.html*.

[2] *See* Letter to the Honorable Dirk Kempthorne, Secretary of the Interior, dated February 11, 2008, from Senators Feingold (WI), Specter (PA), Bond (MO), and Wicker (MS). A copy of this letter may be accessed at *http://www.doi.gov/issues/response_to_senators.html*.

firearms, or to otherwise possess or carry concealed firearms in Federal facilities in national parks and wildlife refuges as such possession is proscribed by 18 U.S.C. 930.

We also note that national park areas and wildlife refuges are often located in close proximity to state parks or wildlife management areas, National Forests, or public lands managed by the BLM. Visitors to these sites may frequently travel through a combination of Federal and state lands during the course of a trip or vacation. In these circumstances, the Department believes that adopting for these Federal lands the applicable state standards for the possession of firearms will promote uniformity of application and better visitor understanding and compliance with the requirements.

During the course of the public comment process, a number of entities and individuals, including the State of Alaska and employees of the FWS, suggested that the Department's reference to ''similar state lands'' in the proposed regulation is ambiguous and confusing since individual States provide for various management regimes that make it difficult to determine what areas are actually similar. As discussed more fully below, the Department agrees with this concern and has deleted this language in the final rule. The modified final language adopts state law in a similar manner to regulations adopted by other Federal agencies regarding firearms on public lands, as called for by the 51 United States Senators who wrote to us.

We understand that states with concealed carry laws routinely impose statutory prohibitions on the lawful possession of concealed handguns in certain locations. It is possible that a state may wish to prohibit an individual from possessing a concealed weapon on Federal lands within state boundaries. In the event a state enacts such a law, the Department's final rule respects the legislative judgment of the people of that State.

2. Constitutional Considerations

During the pendency of our public comment period, the Supreme Court announced its decision in *District of Columbia* v. *Heller*, 554 U.S.ll , 128 S. Ct. 2783; 171 L. Ed. 2d 637; 2008 U.S. LEXIS 5268; 76 U.S.L.W. 4631 (June 26, 2008) (''Heller''), which held that the Second Amendment protects an individual's right to possess a firearm unconnected with service in a government militia, and to use that firearm for traditionally lawful purposes, such as self-defense within the home. Several individuals, including two members of Congress, wrote the Department suggesting that the Court's decision in this case is of significance to the proposal, and that the Department should extend the public comment period to allow citizens to comment on the potential impacts of this case on the proposed rule. In our view, the Supreme Court's decision in *Heller* does not directly impact our proposal to revise existing Federal regulations to more closely conform our regulations to appropriate state laws.

B. Summary of Comments and Responses

The Department received approximately 125,000 comments on the proposed rule from a wide variety of entities, including members of Congress, government agencies, current and former NPS employees, conservation groups, coalitions, and private individuals. Most of those comments were form letters or cards. Many of those expressed opposition to a change in the rules. The majority of supporting comments were submitted by individuals and elected officials favoring a rule that would align Federal policy with the adjacent state law. In addition to the original 51 United States senators who originally wrote to the Secretary, U.S. Senators Jim Webb (VA) and Senator Lisa Murkowski (AK) as well as Alaska Governor Sarah Palin wrote letters in support of the rule during the comment period. U.S. Senators Dianne Feinstein and Daniel K. Akaka along with U.S. House members Norman D. Dicks and Raul M. Grijalva submitted a letter during the comment period opposing any change to the existing regulations.

To facilitate analysis of the public comments, we formed a working group composed of employees from the NPS, the FWS, and the Office of the Assistant Secretary for Fish and Wildlife and Parks. The group was charged with analyzing the comments and organizing them into categories for further review. The working group considered all of the information and recommendations submitted in developing the final rule. The following is a summary of the comments and our responses.

Issue 1: The Department should not rely on state law to manage firearms because Congress has given Federal government complete authority over Federal lands.

Response 1: We recognize that Congress may enact comprehensive and preemptive statutes in a wide range of areas that involve national interests. In these instances, the Supreme Court has consistently held that Federal law preempts state law and does not permit further regulation by the States. The Property Clause of the United States Constitution authorizes the Congress to enact laws to maintain and administer the Federal lands, including the laws establishing the National Park System and the National Wildlife Refuge System. These statutes are not necessarily preemptive of the field of law in that they allow for Federal agencies to appropriately adopt state law in a range of subjects, including law enforcement and firearms. *See*, e.g., 16 U.S.C. 1a–3; 1a–6; 1531(c); 1535 (cooperation with states); *see also* Coggins, George C., Wilkinson, Charles F., Leshy, John D., and Fischman, Robert L., *Federal Public Land and Resources Law* (6 Ed. 2007), p. 181 (''In most traditionally Federal areas where uniform national regulation is important, such as aliens, navigation, Indian affairs, labor, and civil rights, the Supreme Court has been quick to find preemption. Federal lands have never been regarded as such an area. Indeed, state law has always played an important role, applying to much private activity on federal lands.''). We believe that this principle applies here.

Issue 2: The proposed rule will not provide a uniform standard because state laws governing concealed firearms vary. Additionally, since many parks are located in two or more states with different licensing schemes, there is no way that visitors and park managers will be able to maintain clear standards and enforcement.

Response 2: We recognize that the proposed rule means that permissible activities in parks and refuges may vary from state to state. However, this circumstance is not unique and has not presented significant problems in other areas where state laws are adopted. For example, current NPS regulations adopt such an approach for hunting, fishing, motor vehicles and boating. Moreover, in the relatively few instances where parks and refuges are located in more than one state, we do not believe that this presents a situation any different than citizens already face. As is generally the case, and is also true under this rule, individuals remain responsible for familiarizing themselves with and obeying all applicable laws, including the laws of the state they are located within. We see no reason why citizens who are authorized to carry a concealed firearm are not capable of undertaking this same due diligence when they cross state boundaries within parks or refuges. In addition, the NPS and FWS will take appropriate steps to inform visitors about the applicable requirements when a unit is located in more than one state.

Issue 3: The Department's reference to ''similar state lands'' in the text of the proposed regulation is ambiguous and confusing since individual states appear to define their parks and refuge lands in different ways, and may regulate these lands differently within the same state. The text could be clarified by simply making a more general reference to state law as the governing standard which, by implication, will also include more specific regulations or policies adopted by the state with regard to the possession of a concealed firearm in a state park or wildlife refuge. The rule should be modified to cure this ambiguity.

Response 3: We agree with the commenters that the reference to ''similar state lands'' in the proposed rule was ambiguous and led to confusion as to what rules would apply to particular Federal park areas and national wildlife refuges. A very diverse range of commenters raised these concerns, including the National Parks Conservation Association (NPCA), senior employees of the FWS, the State of Alaska, and the West Virginia Citizens Defense League (WVCDL). Several commenters suggest that the ambiguities in the proposed language may be readily cured by amending the language of the proposed rule and simply making a more general reference to state law.

We have given consideration to this issue and have revised the proposed language to delete the references to ''similar lands'' and to more succinctly state that we are applying the rules established by the applicable state laws. First, by adopting this revision, the final rule more closely resembles the regulatory approach used by BLM and the USFS. Second, we believe the final rule will lessen or eliminate confusion about the application of the various Federal rules because the primary Federal land managers will now have a similar approach to addressing the issue. Finally, no State separately commented in opposition to permitting loaded firearms to be carried in Federal parks—whether such rules were related to ''similar state lands'' or any other state law standard. The only State to comment on the proposed rule was Alaska, which supported an amendment to existing regulations that would authorize loaded firearms in Federal parks consistent with state law.

Issue 4: There is no reason to allow visitors to carry a concealed firearm for personal safety since visitors to a national park area or wildlife refuge are statistically unlikely to be a victim of violent crime or criminal assault.

Response 4: The available data indicates that National Parks and Wildlife Refuges are less prone to criminal activity than other areas in the United States. However, we also recognize that current statistics show an alarming increase in criminal activity on certain Federal lands managed by the Department of the Interior, especially in areas close to the border and in lands that are not readily accessible by law enforcement authorities. In 2007, for instance, the NPS reported 8 murders, 43 forcible rapes, 57 robberies, and 274 instances of aggravated assault. The fact that these crime rates may be lower than the national average does not mean that parks are free from violence, nor do these figures suggest that people should be less cautious or prepared when visiting a national park unit or national wildlife refuge. Congress recognized this fact in 1994 when it enacted a statute which requires the Department to (1) ''compile a list of areas within the National Park System with the highest rates of violent crime'' and (2) ''make recommendations concerning capital improvements, and other measures, needed within the National Park System to reduce the rates of violent crime, including the rate of sexual assault.'' 16 U.S.C. 1a–7a(b)(1)–(2).

The Department has recently proposed substantial budget increases to resolve some of these problems, and our law enforcement officials will continue to work with their colleagues in tribal, state, and local law enforcement to prevent criminal activities on Federal lands. We do not believe it is appropriate to decline to recognize state laws simply because a person enters the boundaries of a national park or wildlife refuge, or because there is a lesser chance that a visitor will be harmed or potentially killed by a criminal in a national park unit or wildlife refuge.

Issue 5: Visitors should not carry a concealed firearm for self-defense because NPS and FWS law enforcement officers are more than adequate to protect individuals from harm.

Response 5: The Department believes that NPS and FWS law enforcement officers work hard and perform valiant public service in their respective capacities. We also recognize that the NPS and FWS together employ approximately 3,000 full and part-time law enforcement officers who are responsible for patrolling and securing millions of acres of land, a substantial portion of which is remote wilderness. In these circumstances, NPS and FWS law enforcement officers are in no position to guarantee a specific level of public safety on their lands, and cannot prevent all violent offenses and crimes against visitors. See, e.g., *Bowers* v. *DeVito*, 686 F.2d 616 (7th Cir. 1982) (no Federal Constitutional requirement that police provide protection); *Warren* v. *District of Columbia*, 444 A.2d 1 (D.C. 1981) (''the government and its agents are under no general duty to provide public services, such as police protection, to any particular individual citizen'').

Issue 6: Once a visitor sets up camp in a campground, the site becomes a temporary dwelling subject to legal protections. For that reason, the rule should recognize that a visitor has the right to possess an operable firearm in the campsite for self-defense.

Response 6: We understand that a number of Federal courts of appeal, as well as the Idaho Supreme Court, have concluded that citizens have a right under the Fourth Amendment to be free from unreasonable searches and seizures from government officials within tents and other temporary structures on public lands. *United States* v. *Sandoval*, 200 F.3d 659 (9th Cir. 2000), citing *United States* v. *Gooch*, 6 F.3d 673, 677 (9th Cir. 1993) (reasonable expectation of privacy in tent on public land). *See also State* v. *Pruss*, 181 P.3d 1231 (Idaho 2008) (''If the travel trailer is protected against government intrusion, then so is the tent.''). However, we are not aware of any cases that have extended this reasoning to the Second Amendment and determined that an individual has a constitutional right to keep and bear arms in a tent or trailer located on Federal public lands. Until such a precedent is clearly established, the Department will continue to assume that the Supreme Court's decision in *Heller* applies to a person's residential dwelling and not to a temporary dwelling on public land. *See Heller*, Slip Opinion at 56 (the Second Amendment proscribes the way the Federal government may place limits upon a citizen's ''inherent right of self-defense [which is] central to the Second Amendment right.''); *see also* 36 CFR 2.4(a)(2) (''weapons * * * may be carried, possessed, or used'' within a ''residential dwelling''); cf. *Pruss*, 181 P.3d at 1231 (''The respect for the sanctity of the home does not depend upon whether it is a mansion or hut, or whether it is a permanent or a temporary structure''); *see also Miller* v. *United States*, 357 U.S. 301, 307 (1958) (same).

Issue 7: A visitor with a concealed firearm may not be well-trained to use a firearm and thus be given a false sense security against potential attackers.

Response 7: Many individuals authorized under State law to carry

concealed firearms are in possession of permits, the acquisition of which is conditioned on some form of training in the use and storage of firearms. Moreover, there is no data before us that would suggest that these citizens lack the requisite skills and/or training to properly use their firearms for self-defense. In fact, statistics maintained by the Justice Department show that from 1987–92 about 83,000 crime victims per year used a firearm to defend themselves or their property, and a majority of these individuals used their firearms during a violent crime. See United States Department of Justice, Office of Justice Programs, Bureau of Justice Statistics, *Guns and Crime: Handgun Victimization, Firearm Self-Defense, and Firearm Theft* (1994); *see also* National Research Council, Committee on Law and Justice, *Firearms and Violence: A Critical Review* (Washington, DC: The National Academies Press, 2004), pp. 7.

Issue 8: Visitors who carry a concealed firearm permitted under state law are likely to use their handguns to shoot or injure wildlife.

Response 8: The Bureau of Land Management and the U.S. Forest Service and a number of state parks and refuges currently authorize the possession of concealed firearms consistent with the laws of the state in which they are located. The available data does not suggest that visitors to these lands misuse their legally permitted firearms for poaching or illegal shooting, or that there is additional danger posed to the public from lawfully carried concealed firearms. See, e.g., National Research Council, Committee on Law and Justice, *Firearms and Violence: A Critical Review* (Washington, DC: The National Academies Press, 2004), p.6; Dodenhoff, David, *Concealed Carry Legislation: An Examination of the Facts*, Wisconsin Public Policy Research Institute (2006), p. 5; see also, Jeffrey Snyder, *Fighting Back: Crime, Self-Defense, and the Right to Carry a Handgun* (October 1997); Kopel, David, et al., *Policy Review* No. 78 (July & August 1996).

Issue 9: The rule will inhibit the ability of park rangers to halt poaching because brandishing a firearm would no longer be probable cause to search for evidence of wildlife parts.

Response 9: We disagree. The final rule continues to maintain existing prohibitions on poaching, unauthorized target shooting, and other illegal uses of firearms, including laws against brandishing a firearm in public. As with any other law or regulation, we expect visitors to obey those requirements. Individuals who break the law by using illegally their concealed firearms will be subjected to arrest and/or prosecution.

Issue 10: The proposed rule is too narrow and should be expanded to allow visitors to carry all forms of firearms, including shotguns and rifles.

Response 10: The Department recognizes that long guns are an important part of America's hunting and recreation tradition, and that many individuals use these arms for self-defense of their home and person. Although we understand that there may be good reasons to update our policies with regard to these firearms, we have decided at this time to adopt a narrowly-tailored rule to give greater respect to state laws which authorize law-abiding citizens to possess and carry concealed firearms.

Issue 11: The proposed rule should have been subjected to a full environmental review under the National Environmental Policy Act so that the public could comment on the impacts of the rule on the environment.

Response 11: The Department agrees that policies and rules which have a significant effect on the environment must be fully analyzed under the provisions of the National Environmental Policy Act of 1969 (NEPA) (42 U.S.C. 4321–4347). Consistent with this commitment, we have analyzed the final rule under NEPA and concluded that (i) the action is subject to a categorical exclusion under 43 CFR 46.210 since the final regulation is in the nature of a legal change to existing regulations, and (ii) no ''extraordinary circumstances'' exist which would prevent the proposed action from being classified as categorically excluded. *Id.* This decision is fully described in our decision document dated November 18, 2008, which is available to the public at *http://www.doi.gov/*.

Issue 12: The proposed rule should have been subjected to study and consultation under Section 7 of the Endangered Species Act.

Response 12: Section 7 of the Endangered Species Act (ESA) of 1972, as amended (16 U.S.C. 1531 et seq.), provides that Federal agencies shall ''insure that any action authorized, funded or carried out * * * is not likely to jeopardize the continued existence of any endangered species or threatened species or result in the destruction or adverse modification of (critical) habitat.'' We have analyzed the final rule and have concluded that it is solely a legal amendment to existing rules, and that it does not authorize any new uses or activities that may affect endangered or threatened species or designated critical habitat. *See* 50 CFR 402.14(a). For this reason, we have determined that the final rule has ''no effect'' on listed species or on designated critical habitat. Accordingly, we are not required to conduct a Section 7 consultation under the ESA for the final rule.

Issue 13: National Parks and Wildlife Refuges are designed to be havens of peace and safety. In this respect, visitors who do not like guns will not fully enjoy their visit to a National Park or Wildlife Refuge if they know that another visitor in close proximity is carrying a loaded and operable firearm permitted by the state.

Response 13: The Department seeks to provide opportunities for all those who visit national park areas and national wildlife refuges to enjoy their experience. Insofar as the final rule adopts the State law that also governs outside the national park or refuge area, the Department believes that its applicability to these Federal areas will not diminish the experience of most visitors, particularly where, as here, NPS and FWS law enforcement officers already carry firearms which are visible to the public.

III. Required Determinations

Regulatory Planning and Review (Executive Order 12866)

This document is a significant rule and is subject to review by the Office of Management and Budget (OMB) under Executive Order 12866.

(1) This rule will not have an effect of $100 million or more on the economy. It will not adversely affect in a material way the economy, productivity, competition, jobs, the environment, public health or safety, or State, local, or tribal governments or communities.

(2) This rule will not create a serious inconsistency or otherwise interfere with an action taken or planned by another agency.

(3) This rule does not alter the budgetary effects of entitlements, grants, user fees, or loan programs or the rights or obligations of their recipients.

(4) This rule raises novel legal or policy issues.

Regulatory Flexibility Act

The Department of the Interior certifies that this document will not have a significant economic effect on a substantial number of small entities under the Regulatory Flexibility Act (5 U.S.C. 601 *et seq.*).

Small Business Regulatory Enforcement Fairness Act (SBREFA)

This rule is not a major rule under 5 U.S.C. 804(2), the Small Business

Regulatory Enforcement Fairness Act. This rule:

a. Does not have an annual effect on the economy of $100 million or more;

b. Will not cause a major increase in costs or prices for consumers, individual industries, Federal, State, or local government agencies, or geographic regions; and

c. Does not have significant adverse effects on competition, employment, investment, productivity, innovation, or the ability of U.S.-based enterprises to compete with foreign-based enterprises.

Unfunded Mandates Reform Act

This rule does not impose an unfunded mandate on State, local, or tribal governments or the private sector of more than $100 million per year. The rule does not have a significant or unique effect on State, local, or tribal governments or the private sector.

Takings (Executive Order 12630)

In accordance with Executive Order 12630, the rule does not have significant takings implications.

Federalism (Executive Order 13132)

In accordance with Executive Order 13132, the rule does not require the preparation of a federalism assessment.

Civil Justice Reform (Executive Order 12988)

This regulation meets the applicable standards set forth in Sections 3(a) and 3(b)(2) of Executive Order 12988 Civil Justice Reform.

Paperwork Reduction Act

This regulation does not contain information collection requirements, and a submission under the Paperwork Reduction Act is not required.

National Environmental Policy Act

The Department has analyzed the final rule under NEPA and determined that the action is subject to a categorical exclusion under applicable regulations. *See* 43 CFR 46.210. First, the rulemaking is in the nature of a legal change to existing rules that will not have any actual effects on the environment. And second, the Department has determined that no ''extraordinary circumstances'' exist which would prevent the proposed action from being classified as categorically excluded. *Id.* This decision is fully described in our decision document dated November 18, 2008, which is available to the public at *http://www.doi.gov/*.

Government-to-Government Relationship With Tribes

In accordance with Executive Order 13175 ''Consultation and Coordination with Indian Tribal Governments'' (65 FR 67249), the President's memorandum of April 29, 1994, ''Government-to-Government Relations with Native American Tribal Governments'' (59 FR 22961), and 512 DM 2, the Department has invited federally recognized tribal governments to jointly evaluate and address the potential effects, if any, of the proposed regulatory action.

IV. Section-by-Section Analysis

36 CFR Part 2

Section 2.4—Weapons, Traps, and Nets

Previously, Section 2.4 generally prohibited visitors from possessing an operable and loaded firearm in national park areas unless the firearm is used for lawful hunting activities, target practice in areas designated by special regulations, or other purposes related to the administration of Federal lands in Alaska. Under the final rule, an individual may possess, carry, and transport concealed, loaded, and operable firearms within a national park area in the same manner, and to the same extent, that a person may lawfully possess, carry, and transport concealed, loaded and operable firearms in the state in which the Federal park, or that portion thereof, is located. Possession of concealed firearms in national parks as authorized by this section must also conform to applicable Federal laws. Accordingly, nothing in this regulation shall be construed to authorize concealed carry of firearms in any Federal facility or Federal court facility as defined in 18 U.S.C. 930.

50 CFR Part 27

Section 27.42—Firearms

The previous regulation in Section 27.42 generally prohibited visitors from possessing an operable and loaded firearm in a national wildlife refuge unless the firearm is used for lawful hunting activities. Under the final rule, an individual may possess, carry, and transport concealed, loaded, and operable firearms within a national wildlife refuge in the same manner, and to the same extent, that a person may lawfully possess, carry, and transport concealed, loaded and operable firearms in the state in which the national wildlife refuge, or that portion thereof, is located. Possession of concealed firearms in national wildlife refuges as authorized by this section must also conform to applicable Federal laws. Accordingly, nothing in this regulation shall be construed to authorize concealed carry of firearms in any Federal facility or Federal court facility as defined in 18 U.S.C. 930.

List of Subjects

36 CFR Part 2

National parks.

50 CFR Part 27

Wildlife refuges.

■ For the reasons discussed in the preamble, we amend part 2 of title 36 and part 27 of title 50 of the Code of Federal Regulations as follows:

Title 36—Parks, Forests, and Public Property

CHAPTER I—NATIONAL PARK SERVICE, DOI

PART 2—RESOURCE PROTECTION, PUBLIC USE AND RECREATION

■ 1. The authority citation for part 2 continues to read as follows:

Authority: 16 U.S.C. 1, 3, 9a, 17j–2, 462.

■ 2. Amend § 2.4 by adding a new paragraph (h) to read as follows:

§ 2.4 Weapons traps and nets.

* * * * *

(h) Notwithstanding any other provision in this Chapter, a person may possess, carry, and transport concealed, loaded, and operable firearms within a national park area in accordance with the laws of the state in which the national park area, or that portion thereof, is located, except as otherwise prohibited by applicable Federal law.

Title 50—Wildlife and Fisheries

CHAPTER I—UNITED STATES FISH AND WILDLIFE SERVICE, DOI

PART 27—PROHIBITED ACTS

■ 1. The authority citation for part 27 continues to read as follows:

Authority: Sec. 2, 33 Stat. 614, as amended (16 U.S.C. 685); Sec. 5, 43 Stat. 651 (16 U.S.C. 725); Sec. 5, Stat. 449 (16 U.S.C. 690d); Sec. 10, 45 Stat. 1224 (16 U.S.C. 715i); Sec. 4, 48 Stat. 402, as amended (16 U.S.C. 664); Sec. 2, 48 Stat. 1270 (43 U.S.C. 315a); 49 Stat. 383 as amended; Sec. 4, 76 Stat. (16 U.S.C. 460k); Sec. 4, 80 Stat. 927 (16 U.S.C. 668dd) (5 U.S.C. 685, 752, 690d); 16 U.S.C. 715s).]

Subpart D—Disturbing Violations: With Weapons

■ 2. Amend § 27.42 by adding a new paragraph (e) to read as follows:

§ 27.42 Firearms.

* * * * *

(e) Notwithstanding any other provision in this Chapter, persons may

possess, carry, and transport concealed, loaded, and operable firearms within a national wildlife refuge in accordance with the laws of the state in which the wildlife refuge, or that portion thereof, is located, except as otherwise prohibited by applicable Federal law.

Dated: December 5, 2008.

Lyle Laverty,

Assistant Secretary of the Interior for Fish and Wildlife and Parks.

[FR Doc. E8–29249 Filed 12–9–08; 8:45 am]

BILLING CODE 4312–52–P

DEPARTMENT OF COMMERCE

Patent and Trademark Office

37 CFR Part 41

[Docket No.: PTO–P–2007–0006]

RIN 0651–AC12

Rules of Practice Before the Board of Patent Appeals and Interferences in Ex Parte Appeals; Delay of Effective and Applicability Dates

AGENCY: United States Patent and Trademark Office, Commerce.

ACTION: Final rule; delay of effective and applicability dates.

SUMMARY: On June 10, 2008, the United States Patent and Trademark Office (Office) published the final rule that amends the rules governing practice before the Board of Patent Appeals and Interferences (BPAI) in *ex parte* patent appeals. The final rule states that the effective date is December 10, 2008, and that the final rule shall apply to all appeals in which an appeal brief is filed on or after the effective date. On June 9, 2008, the Office published a 60-Day **Federal Register** Notice requesting the Office of Management and Budget (OMB) to establish a new information collection for BPAI items in the final rule and requesting public comment on the burden impact of the final rule under the provisions of the Paperwork Reduction Act (PRA). On October 8, 2008, the Office published a 30-Day **Federal Register** Notice stating that the proposal for the collection of information under the final rule was being submitted to OMB and requesting comments on the proposed information collection be submitted to OMB. The proposed information collection is currently under consideration by OMB. Since the review by OMB has not been completed, the Office is hereby notifying the public that the effective and applicability date of the final rule is not December 10, 2008. The effective and applicability dates will be identified in a subsequent notice.

DATES: The effective date for the final rule published at 73 FR 32938, June 10, 2008, is delayed, pending completion of OMB review of the proposed information collection under the PRA. The Office will issue a subsequent notice identifying a revised effective date on which the final rule shall apply.

FOR FURTHER INFORMATION CONTACT: Allen MacDonald, Administrative Patent Judge, at (571) 272–9797, or Kimberly Jordan, Chief Trial Administrator, at (571) 272–4683, Board of Patent Appeals and Interferences, directly by phone, or by facsimile to (571) 273–0043, or by mail addressed to: Mail Stop Board of Patents Appeals and Interferences, P.O. Box 1450, Alexandria, VA 22313–1450.

SUPPLEMENTARY INFORMATION: On June 10, 2008, the United States Patent and Trademark Office (Office) published the final rule that amends the rules governing practice before the Board of Patent Appeals and Interferences (BPAI) in *ex parte* patent appeals. *See Rules of Practice Before the Board of Patent Appeals and Interferences in Ex Parte Appeals;* Final Rule, 73 FR 32938 (June 10, 2008), 1332 *Off. Gaz. Pat. Office* 47 (July 1, 2008) (hereinafter ''BPAI final rule 2008''). The BPAI final rule 2008 states that the effective date is December 10, 2008, and that the final rule shall apply to all appeals in which an appeal brief is filed on or after the effective date.

On June 9, 2008, the Office published a new information collection request for OMB to review several BPAI items in the BPAI final rule 2008 as subject to the PRA. *See Board of Patent Appeals and Interferences Actions;* New Collection, Comment Request, 73 FR 32559 (June 9, 2008) (hereinafter ''60-Day Notice''). In addition to requesting OMB to establish a new information collection, the 60-Day Notice invited comments from the public and other Federal agencies on the burden impact of the proposed information collection under the provisions of the PRA. The 60-Day Notice specified that comments were to be submitted on or before August 8, 2008.

On October 8, 2008, the Office published a notice that the proposed information collection was being submitted to OMB and public comments on the proposed collection were to be submitted to OMB on or before November 7, 2008. *See Submission for OMB Review; Comment Request;* 73 FR 58943 (October 8, 2008) (hereinafter ''30-Day Notice''). On October 9, 2008, the Office filed a Supporting Statement with OMB (*http://www.reginfo.gov/public/do/PRAViewDocument?ref_nbr=200809–0651–003*). The Supporting Statement included the Office's response to comments received following the 60–Day Notice. The 30–Day Notice requested public comments be submitted to OMB on or before November 7, 2008.

The proposed information collection request is currently under consideration for approval by OMB. The review by OMB has not been completed. Therefore, the effective and applicability dates of the BPAI final rule 2008 will not be December 10, 2008. The Office will notify the public when the revised effective and applicability dates are set. In the subsequent notification, the Office will provide at least a 30-day time period before the BPAI final rule 2008 becomes effective.

On November 20, 2008, the Office published a clarification notice on the effective date provision. *See Clarification of the Effective Date Provision in the Final Rule for Ex Parte Appeals,* 73 FR 70282 (November 20, 2008). As indicated in the clarification notice, the Office will not hold an appeal brief as non-compliant solely for following the new format even though it is filed before the effective date. Thus, appeal briefs filed before the effective date of the BPAI final rule 2008 (yet to be determined) must either comply with current 37 CFR 41.37 (which remains in effect) or revised 37 CFR 41.37 (the effective date of which has yet to be determined). Furthermore, the Office has posted a list of questions and answers on the USPTO Web site (at *http://www.uspto.gov/web/offices/dcom/bpai/rule.html*) regarding the implementation of the BPAI final rule 2008. These questions and answers will be revised accordingly.

Dated: December 5, 2008.

Jon W. Dudas,

Under Secretary of Commerce for Intellectual Property and Director of the United States Patent and Trademark Office.

[FR Doc. E8–29297 Filed 12–9–08; 8:45 am]

BILLING CODE 3510–16–P

ENVIRONMENTAL PROTECTION AGENCY

40 CFR Part 180

[EPA–HQ–OPP–2007–0672; FRL–8390–8]

Mefenpyr-diethyl and Metabolites; Pesticide Tolerance

AGENCY: Environmental Protection Agency (EPA).

ACTION: Final rule.

SUMMARY: This regulation establishes tolerances for residues of the herbicide safener, mefenpyr-diethyl (CAS Reg. No. 135590–91–9), also known as 1-(2,4-dichlorophenyl)-4,5-dihydro-5-methyl-1H-pyrazole-3,5-dicarboxylic acid, diethyl ester and its 2,4-dichlorophenyl-pyrazoline metabolites, applied at a rate no greater than 0.053 pounds safener per acre per growing season, in or on the rotational crop commodities soybean seed, soybean hay, soybean forage and canola seed. Bayer CropScience requested these tolerances under the Federal Food, Drug, and Cosmetic Act (FFDCA).

DATES: This regulation is effective December 10, 2008. Objections and requests for hearings must be received on or before February 9, 2009, and must be filed in accordance with the instructions provided in 40 CFR part 178 (see also Unit I.C. of the **SUPPLEMENTARY INFORMATION)**.

ADDRESSES: EPA has established a docket for this action under docket identification (ID) number EPA–HQ–OPP–2007– 0672. All documents in the docket are listed in the docket index available at *http://www.regulations.gov*. Although listed in the index, some information is not publicly available, e.g., Confidential Business Information (CBI) or other information whose disclosure is restricted by statute. Certain other material, such as copyrighted material, is not placed on the Internet and will be publicly available only in hard copy form. Publicly available docket materials are available in the electronic docket at *http://www.regulations.gov*, or, if only available in hard copy, at the OPP Regulatory Public Docket in Rm. S–4400, One Potomac Yard (South Bldg.), 2777 S. Crystal Dr., Arlington, VA. The Docket Facility is open from 8:30 a.m. to 4 p.m., Monday through Friday, excluding legal holidays. The Docket Facility telephone number is (703) 305–5805.

FOR FURTHER INFORMATION CONTACT: Karen Samek, Registration Division (7505P), Office of Pesticide Programs, Environmental Protection Agency, 1200 Pennsylvania Ave., NW., Washington, DC 20460–0001; telephone number: (703) 347-8825; e-mail address: *samek.karen@epa.gov*.

SUPPLEMENTARY INFORMATION:

I. General Information

A. Does this Action Apply to Me?

You may be potentially affected by this action if you are an agricultural producer, food manufacturer, or pesticide manufacturer. Potentially affected entities may include, but are not limited to:

- Crop production (NAICS code 111).
- Animal production (NAICS code 112).
- Food manufacturing (NAICS code 311).
- Pesticide manufacturing (NAICS code 32532).

This listing is not intended to be exhaustive, but rather provides a guide for readers regarding entities likely to be affected by this action. Other types of entities not listed in this unit could also be affected. The North American Industrial Classification System (NAICS) codes have been provided to assist you and others in determining whether this action might apply to certain entities. If you have any questions regarding the applicability of this action to a particular entity, consult the person listed under **FOR FURTHER INFORMATION CONTACT**.

B. How Can I Access Electronic Copies of this Document?

In addition to accessing electronically available documents at *http://www.regulations.gov*, you may access this **Federal Register** document electronically through the EPA Internet under the ''**Federal Register**'' listings at *http://www.epa.gov/fedrgstr*. You may also access a frequently updated electronic version of 40 CFR part 180 through the Government Printing Office's e-CFR site at *http://www.gpoaccess.gov/ecfr*. To access the OPPTS Harmonized Guidelines referenced in this document, go directly to the guidelines at *http://www.epa.gpo/opptsfrs/home/guidelin.htm*.

C. Can I File an Objection or Hearing Request?

Under section 408(g) of FFDCA, 21 U.S.C. 346a, any person may file an objection to any aspect of this regulation and may also request a hearing on those objections. The EPA procedural regulations which govern the submission of objections and requests for hearings appear in 40 CFR part 178. You must file your objection or request a hearing on this regulation in accordance with the instructions provided in 40 CFR part 178. To ensure proper receipt by EPA, you must identify docket ID number EPA–HQ–OPP–2007–0672 in the subject line on the first page of your submission. All requests must be in writing, and must be mailed or delivered to the Hearing Clerk on or before February 9, 2009.

In addition to filing an objection or hearing request with the Hearing Clerk as described in 40 CFR part 178, please submit a copy of the filing that does not contain any CBI for inclusion in the public docket that is described in **ADDRESSES**. Information not marked confidential pursuant to 40 CFR part 2 may be disclosed publicly by EPA without prior notice. Submit your copies, identified by docket ID number EPA–HQ–OPP–2007–0672, by one of the following methods:

- *Federal eRulemaking Portal*: *http://www.regulations.gov*. Follow the on-line instructions for submitting comments.
- *Mail*: Office of Pesticide Programs (OPP) Regulatory Public Docket (7502P), Environmental Protection Agency, 1200 Pennsylvania Ave., NW., Washington, DC 20460–0001.
- *Delivery*: OPP Regulatory Public Docket (7502P), Environmental Protection Agency, Rm. S–4400, One Potomac Yard (South Bldg.), 2777 S. Crystal Dr., Arlington, VA. Deliveries are only accepted during the Docket Facility's normal hours of operation (8:30 a.m. to 4 p.m., Monday through Friday, excluding legal holidays). Special arrangements should be made for deliveries of boxed information. The Docket Facility telephone number is (703) 305–5805.

II. Petition for Tolerance

In the **Federal Register** of August 22, 2007 (72 FR 47008) (FRL–8145–1), EPA issued a notice pursuant to section 408 of FFDCA, 21 U.S.C. 346a, as amended by FQPA (Public Law 104–170), announcing the filing of a pesticide petition (PP 7E7224) by Bayer CropScience, 2 T.W., Alexander Drive, P.O. Box 12014, Research Triangle Park, NC 27709. The petition requested that 40 CFR 180.509 be amended for the herbicide safener, mefenpyr-diethyl, 1-(2,4-dichlorophenyl)-4,5-dihydro-5-methyl-1H-pyrazole-3,5-dicarboxylic acid, diethyl ester and its 2,4-dichlorophenyl-pyrazoline metabolites by increasing the maximum allowable seasonal use rate to 0.053 lb safener/acre(A), as well as, establishing rotation crop tolerances on soybean seed at 0.02 parts per million (ppm); soybean forage at 0.1ppm; soybean hay at 0.1 ppm; and canola seed at 0.02 ppm. That notice referenced a summary of the petition prepared by Bayer CropScience, the registrant, which is available to the public in the docket, *http://www.regulations.gov*. There were no comments received in response to the Notice of Filing.

III. Aggregate Risk assessment and Determination of Safety

Section 408(b)(2)(A)(i) of FFDCA allows EPA to establish a tolerance (the legal limit for a pesticide chemical residue in or on a food) only if EPA

determines that the tolerance is ''safe.'' Section 408(b)(2)(A)(ii) of FFDCA defines ''safe'' to mean that ''there is a reasonable certainty that no harm will result from aggregate exposure to the pesticide chemical residue, including all anticipated dietary exposures and all other exposures for which there is reliable information.'' This includes exposure through drinking water and in residential settings, but does not include occupational exposure. Section 408(b)(2)(C) of FFDCA requires EPA to give special consideration to exposure of infants and children to the pesticide chemical residue in establishing a tolerance and to ''ensure that there is a reasonable certainty that no harm will result to infants and children from aggregate exposure to the pesticide chemical residue....''

Consistent with section 408(b)(2)(D) of FFDCA, and the factors specified in section 408(b)(2)(D) of FFDCA, EPA has reviewed the available scientific data and other relevant information in support of this action. EPA has sufficient data to assess the hazards of and to make a determination on aggregate exposure for the petitioned-for tolerances for residues of the herbicide safener, mefenpyr-diethyl, in or on soybean seed at 0.02 ppm, soybean forage at 0.1 ppm, soybean hay at 0.1 ppm, and canola seed at 0.02 ppm; as well as the petitioned-for request to increase the maxium allowable seasonal use rate from 0.026 lb safener/A to 0.053 lb safener/A. EPA's assessment of exposures and risks associated with establishing tolerances follows.

A. Toxicological Profile

EPA has evaluated the available toxicity data and considered its validity, completeness, and reliability as well as the relationship of the results of the studies to human risk. EPA has also considered available information concerning the variability of the sensitivities of major identifiable subgroups of consumers, including infants and children.

Mefenpyr-diethyl has low acute toxicity by the oral, dermal, and inhalation routes of exposure. It is not a dermal irritant but is a slight dermal sensitizer and ocular irritant. Metabolism studies indicate that mefenpyr-diethyl is rapidly metabolized, widely distributed, and primarily excreted via the urine. Repeat exposure via the dermal route did not induce any treatment-related effects at dose levels up to and including the limit dose. Repeated exposure studies via the oral route demonstrated that the target organs are the liver and hematopoietic system in dogs, mice, and rats. Mefenpyr-diethyl was negative for carcinogenicity in rats and mice, and classified as ''not likely to be carcinogenic to humans.'' Mefenpyr-diethyl did not show any genotoxic potential. Developmental toxicity was not observed in the rat at the limit dose (1,000 milligrams/kilogram/day (mg/kg/day)) but was observed in the rabbit (abortions) at the same dose level producing maternal toxicity. Mefenpyr-diethyl did not induce any signs of reproductive toxicity or neurotoxic potential. The developmental toxicity studies in rats and rabbits, as well as the reproductive toxicity study in rats, did not demonstrate any prenatal or postnatal sensitivity. There is a lack of evidence of neurotoxicity in any study on mefenpyr-diethyl and therefore there is no concern for neurotoxicity resulting from exposure to mefenpyr-diethyl.

B. Toxicological Endpoints

For hazards that have a threshold below which there is no appreciable risk, a toxicological point of departure (POD) is identified as the basis for derivation of reference values for risk assessment. The POD may be defined as the highest dose at which no adverse effects are observed (the NOAEL) in the toxicology study identified as appropriate for use in risk assessment. However, if a NOAEL cannot be determined, the lowest dose at which adverse effects of concern are identified (the LOAEL) or a Benchmark Dose (BMD) approach is sometimes used for risk assessment. Uncertainty/safety factors (UFs) are used in conjunction with the POD to take into account uncertainties inherent in the extrapolation from laboratory animal data to humans and in the variations in sensitivity among members of the human population as well as other unknowns. Safety is assessed for acute and chronic dietary risks by comparing aggregate food and water exposure to the pesticide to the acute population adjusted dose (aPAD) and chronic population adjusted dose (cPAD). The aPAD and cPAD are calculated by dividing the POD by all applicable UFs. Aggregate short-, intermediate-, and chronic-term risks are evaluated by comparing food, water, and residential exposure to the POD to ensure that the margin of exposure (MOE) called for by the product of all applicable UFs is not exceeded. This latter value is referred to as the Level of Concern (LOC).

For non-threshold risks, the Agency assumes that any amount of exposure will lead to some degree of risk. Thus, the Agency estimates risk in terms of the probability of an occurrence of the adverse effect greater than that expected in a lifetime. For more information on the general principles EPA uses in risk characterization and a complete description of the risk assessment process, see *http://www.epa.gov/pesticides/factsheets/riskassess.htm*.

A summary of the toxicological endpoints for mefenpyr-diethyl for human risk assessment is shown in Table 1 of this unit.

TABLE 1.—SUMMARY OF TOXICOLOGICAL DOSES AND ENDPOINTS FOR MEFENPYR-DIETHYL FOR USE IN DIETARY AND NON-OCCUPATIONAL HUMAN HEALTH RISK ASSESSMENTS

Exposure/Scenario	Point of Departure and Uncertainty Factors	RfD, PAD, Level of Concern for Risk Assessment	Study and Toxicological Effects
Acute Dietary (General population, including infants and children)	No hazard was identified in any toxicity study for this duration of exposure.		
Acute Dietary (Females 13–49 years of age)	No hazard was identified in any toxicity study for this duration of exposure.		
Chronic Dietary (All populations)	NOAEL = 51 mg/kg/day UF_A = 10x UF_H = 10x FQPA SF = 1x	Chronic RfD = 0.51 mg/kg/day cPAD = 0.51 mg/kg/day	Chronic oral toxicity study (dog). LOAEL = 260 mg/kg/day, based on increased liver weight in both sexes, cholestasis, and increased alkaline phosphates.

TABLE 1.—SUMMARY OF TOXICOLOGICAL DOSES AND ENDPOINTS FOR MEFENPYR-DIETHYL FOR USE IN DIETARY AND NON-OCCUPATIONAL HUMAN HEALTH RISK ASSESSMENTS—Continued

Exposure/Scenario	Point of Departure and Uncertainty Factors	RfD, PAD, Level of Concern for Risk Assessment	Study and Toxicological Effects
Cancer	Classification: Not likely to be carcinogenic to humans.		

Point of Departure = A data point or an estimated point that is derived from observed dose-response data and used to mark the beginning of extrapolation to determine risk associated with lower environmentally relevant human exposures. NOAEL = no observed adverse effect level. LOAEL = lowest observed adverse effect level. UF=uncertainty factor. UF_A = extrapolated from animal to human (interspecies). UF_H = potential variation in sensitivity among members of the human population (intraspecies). PAD = population adjusted dose (a = acute, c = chronic). RfD = reference dose.

C. Exposure Assessment

1. *Dietary exposure from food and feed uses.* In evaluating dietary exposure to mefenpyr-diethyl, EPA considered exposure under the petitioned-for tolerances, as well as all existing mefenpyr-diethyl tolerances in 40 CFR 180.509. The residue of concern for both risk assessment and tolerance setting purposes in plants and animals is the parent compound, mefenpyr-diethyl, and its 2,4-dichlorophenyl-pyrazoline metabolites. EPA assessed dietary exposures from mefenpyr-diethyl in food as follows:

i. *Acute exposure.* Quantitative acute dietary exposure and risk assessments are performed for a food-use pesticide if a toxicological study has indicated the possibility of an effect of concern occurring as a result of a 1–day or single exposure. No such effects were identified in the toxicological studies for mefenpyr-diethyl; therefore, a quantitative acute dietary exposure assessment is unnecessary.

ii. *Chronic exposure.* A highly conservative chronic dietary risk assessment was conducted for food and drinking water for mefenpyr-diethyl. In conducting the chronic dietary exposure assessment EPA used the food consumption data from the USDA 1994–1996 and 1998 Continuing Survey of Food Intake by Individuals. As to residue levels in food, EPA assumed that 100% of crops with requested uses of mefenpyr-diethyl are treated and that all treated crops contain residues at the tolerance level.

No new magnitude of the residue data, reflecting the new proposed seasonal rate of 0.053 lb safener/A, were submitted for the primary crop commodities. It is, however, noted that the field trial data that were previously submitted in support of the petition to establish tolerances for primary crops were conducted at an exaggerated rate of 0.089 lb/safener/A. Therefore, the Agency has determine that the established tolerances for primary crop commodities remain adequate to support the proposed higher application rate.

iii. *Cancer.* Based on the results of carcinogenicity studies in rats and mice, EPA classified mefenpyr-diethyl as a ''Not likely to be carcinogenic to humans;'' therefore, an exposure assessment for assessing cancer risk is unnecessary for this chemical.

iv. *Anticipated residue and percent crop treated (PCT) information.* EPA did not use anticipated residue or PCT information in the dietary assessment for mefenpyr-diethyl. Tolerance level residues and 100 PCT were assumed for all food commodities.

2. *Dietary exposure from drinking water.* The Agency used screening level water exposure models in the dietary exposure analysis and risk assessment for mefenpyr-diethyl in drinking water. These simulation models take into account data on the physical, chemical, and fate/transport characteristics of mefenpyr-diethyl. Further information regarding EPA drinking water models used in pesticide exposure assessment can be found at *http://www.epa.gov/oppefed1/models/water/index.htm*.

Based on the First Index Reservoir Screening Tool (FIRST) and Screening Concentration in Ground Water (SCI-GROW) models, the estimated drinking water concentrations (EDWCs) of mefenpyr-diethyl and its transformation products for chronic exposures for non-cancer assessments are estimated to be 3 parts per billion (ppb) for surface water and 4 ppb for ground water.

Modeled estimates of drinking water concentrations were directly entered into the dietary exposure model. For chronic dietary risk assessment, the water concentration of value 4 ppb was used to assess the contribution to drinking water.

3. *From non-dietary exposure.* The term ''residential exposure'' is used in this document to refer to non-occupational, non-dietary exposure (e.g., for lawn and garden pest control, indoor pest control, termiticides, and flea and tick control on pets). No products containing mefenpyr-diethyl are available for sale in the residential market because of the crops specified on the applicable labels. As such, a residential risk assessment was not conducted.

4. *Cumulative effects.* Unlike other pesticides for which EPA has followed a cumulative risk approach based on a common mechanism of toxicity, EPA has not made a common mechanism of toxicity finding as to mefenpyr-diethyl and any other substances and mefenpyr-diethyl does not appear to produce a toxic metabolite produced by other substances. For the purposes of this tolerance action, therefore, EPA has not assumed that mefenpyr-diethyl has a common mechanism of toxicity with other substances. For information regarding EPA's efforts to determine which chemicals have a common mechanism of toxicity and to evaluate the cumulative effects of such chemicals, see the policy statements released by EPA's Office of Pesticide Programs concerning common mechanism determinations and procedures for cumulating effects from substances found to have a common mechanism on EPA's website at *http://www.epa.gov/pesticides/cumulative/*.

D. Safety Factor for Infants and Children

1. *In general.* Section 408(b)(2)(C) of FFDCA provides that EPA shall apply an additional tenfold (10X) margin of safety for infants and children in the case of threshold effects to account for prenatal and postnatal toxicity and the completeness of the database on toxicity and exposure unless EPA determines based on reliable data that a different margin of safety will be safe for infants and children. This additional margin of safety is commonly referred to as the FQPA safety factor (SF). In applying this provision, EPA either retains the default value of 10X, or uses a different additional safety factor when reliable data available to EPA support the choice of a different factor.

2. *Prenatal and postnatal sensitivity.* The prenatal and postnatal toxicity database for mefenpyr-diethyl includes rat and rabbit developmental toxicity studies and a two-generation reproduction toxicity study in rats. There was no evidence of increased

susceptibility of *in utero* rats or rabbits in the prenatal developmental studies or of young rats in the two-generation reproduction study.

Developmental toxicity was not observed in the rat at the limit dose (1,000 mg/kg/day). The only effects observed in the rat developmental toxicity study were decreased body-weight gain and food efficiency during the first week of dosing and increased spleen weights in the maternal animal and a marginal decrease in fetal body weight/body-weight gain during lactation (postnatal study). In the rabbit developmental toxicity study, developmental toxicity (abortion) was observed at the same dose level producing maternal toxicity (250 mg/kg/day).

In the reproduction study, parental toxicity consisted of decreased body weight and body-weight gain, and an increase in spleen weight and in the severity (not incidence) of splenic extramedullary hematopoiesis in females. In the pups, decreased body weight and body-weight gains were observed at the same dose levels as the parental animals. The NOAEL is 82 mg/kg/day (1,000 ppm) for both the parental animal and offspring.

3. *Conclusion*. EPA has determined that reliable data show the safety of infants and children would be adequately protected if the FQPA SF were reduced to 1X. That decision is based on the following findings:

i. The toxicity database for mefenpyr-diethyl is complete, with the exception of immunotoxicity studies which are new data requirements under the revised Part 158 Toxicology Data Requirements (40 CFR part 158). In the absence of these studies, EPA has evaluated the available toxicity data for mefenpyr-diethyl and determined that an additional database uncertainty factor is not needed, based on the following conclusions:

No acute and subchronic Neurotoxcity studies are available, however there is no evidence of neurotoxicity in the toxicology database on mefenpyr-diethyl, which includes subchronic, chronic, developmental toxicity, and reproduction studies performed at dose of 250 mg/kg/day and above. Therefore, based on the above considerations, the Agency does not believe that conducting acute and subchronic neurotoxicity studies will result in a NOAEL less than the NOAEL of 51 mg/kg/day already set for mefenpyr-diethyl; therefore additional neurotoxicity studies are not necessary and the 10x safety factor can be reduced to 1x.

Considering that the application of mefenpyr-diethyl will be by either aerial application or spray boom equipment, the 28–day inhalation study is required as confirmatory data. However, the additional uncertainty factor for database uncertainties does not need to be applied since the MOE is >1,000 and significant inhalation exposures of concern are not anticipated.

EPA considered the entire toxicity database for mefenpyr-diethyl for potential adverse effects on the thymus and spleen as indications of potential immunotoxicity and noted enlarged spleens; more severe hematopoiesis and hemosiderin deposits and increased spleen weights were observed in mice at doses greater than the limit dose. However, these were determined to be non-specific changes not indicative of immunotoxicity. Therefore, based on the above considerations, EPA does not believe that conducting a special series (Harmonized Guideline 870.7800), immunotoxicity study will result in a NOAEL less than the NOAEL of 51 mg/kg/day already set for mefenpyr-diethyl and an additional uncertainty factor for database uncertainties does not need to be applied.

ii. There is no indication that mefenpyr-diethyl is a neurotoxic chemical and there is no need for a developmental neurotoxicity study or additional UFs to account for neurotoxicity.

iii. There is no evidence that mefenpyr-diethyl results in increased susceptibility in *in utero* rats or rabbits in the prenatal developmental studies or in young rats in the two-generation reproduction study.

iv. There are no residual uncertainties identified in the exposure databases. The dietary food exposure assessments were performed assuming 100 PCT and tolerance-level residues. EPA made conservative (protective) assumptions in the ground and surface water modeling used to assess exposure to mefenpyr-diethyl in drinking water. These assessments will not underestimate the exposure and risks posed by mefenpyr-diethyl.

E. Aggregate Risks and Determination of Safety

EPA determines whether acute and chronic pesticide exposures are safe by comparing aggregate exposure estimates to the aPAD and cPAD. The aPAD and cPAD represent the highest safe exposures, taking into account all appropriate SFs. EPA calculates the aPAD and cPAD by dividing the POD by all applicable UFs. For linear cancer risks, EPA calculates the probability of additional cancer cases given the estimated aggregate exposure. Short-, intermediate-, and chronic-term risks are evaluated by comparing the estimated aggregate food, water, and residential exposure to the POD to ensure that the MOE called for by the product of all applicable UFs is not exceeded.

1. *Acute risk*. An acute aggregate risk assessment takes into account exposure estimates from acute dietary consumption of food and drinking water. No adverse effect resulting from a single oral exposure was identified in the toxicology studies for mefenpyr-diethyl and no acute dietary endpoint was selected. Therefore, mefenpyr-diethyl is not expected to pose an acute risk.

2. *Chronic risk*. Exposure to mefenpyr-diethyl food and drinking water results in an estimated risk equivalent to <1% of the cPAD for the general population and all regulated subpopulations, including infants and children as well.

There are no residential uses for mefenpyr-diethyl, therefore the aggregate risk assessments include the contribution of risk from dietary (food and water) sources only.

3. *Aggregate cancer risk for U.S. population*. Mefenpyr-diethyl was negative for carcinogenicity in rats and mice and thus is not expected to pose a cancer risk to humans.

4. *Determination of safety*. Based on these risk assessments, EPA concludes that there is a reasonable certainty that no harm will result to the general population, or to infants and children from aggregate exposure to mefenpyr-diethyl residues.

IV. Other Considerations

A. Analytical Enforcement Methodology

An enforcement method for plants entitled ''An Analytical Method for Determination of Residues of AE F107892 (mefenpyr-diethyl) and its Metabolites in Wheat and Barley by Gas Chromatography using Mass Selective Detection (Report Supplement to EPA MRID 45457401)'' is available. Radiovalidation and independent laboratory validation (ILV) data have been submitted for the plant method. The Agency analytical lab has concluded that this method is suitable for food tolerance enforcement of mefenpyr-diethyl and its 2,4-dichlorophenyl-pyrazoline metabolites. The method may be requested from: Chief, Analytical Chemistry Branch, Environmental Science Center, 701 Mapes Rd., Ft. Meade, MD 20755–5350; telephone number: (410) 305–2905; e-mail address: residuemethods@epa.gov.

B. International Tolerances

No Codex, Canadian, or Mexican maximum residue limits are established for residues of mefenpyr-diethyl and its metabolites in crop or livestock commodities; therefore, there are no issues with international harmonization raised by this action.

V. Conclusions

Therefore, 40 CFR 180.509 is amended for the herbicide safener, mefenpyr-diethyl, 1-(2,4-dichlorophenyl)-4,5-dihydro-5-methyl-1H-pyrazole-3,5-dicarboxylic acid, diethyl ester and its 2,4-dichlorophenyl-pyrazoline metabolites by increasing the maximum allowable seasonal use rate to 0.053 lb safener/A, as well as rotation crop tolerances are established for residues of the herbicide safener, mefenpyr-diethyl, 1-(2,4-dichlorophenyl)-4,5-dihydro-5-methyl-1H-pyrazole-3,5-dicarboxylic acid, diethyl ester and its 2,4-dichlorophenyl-pyrazoline metabolites in or on soybean seed at 0.02 ppm; soybean forage at 0.1 ppm; soybean hay at 0.1 ppm; and canola seed at 0.02 ppm.

It should be noted that no new magnitude of the residue data, reflecting the new proposed seasonal rate of 0.053 lb safener/A, were submitted for the primary crop commodities. However, field trail data that were previously submitted in support of the petition to establish tolerances for primary crops were conducted at an exaggerated rate of 0.089 lb safener/A. Therefore, the Agency determined that the established tolerances for primary crop commodities remain adequate to support the proposed higher application rate.

VI. Statutory and Executive Order Reviews

This final rule establishes tolerances under section 408(d) of FFDCA in response to a petition submitted to the Agency. The Office of Management and Budget (OMB) has exempted these types of actions from review under Executive Order 12866, entitled *Regulatory Planning and Review* (58 FR 51735, October 4, 1993). Because this final rule has been exempted from review under Executive Order 12866, this final rule is not subject to Executive Order 13211, *Actions Concerning Regulations That Significantly Affect Energy Supply, Distribution, or Use* (66 FR 28355, May 22, 2001) or Executive Order 13045, entitled *Protection of Children from Environmental Health Risks and Safety Risks* (62 FR 19885, April 23, 1997). This final rule does not contain any information collections subject to OMB approval under the Paperwork Reduction Act (PRA), 44 U.S.C. 3501 *et seq.*, nor does it require any special considerations under Executive Order 12898, entitled *Federal Actions to Address Environmental Justice in Minority Populations and Low-Income Populations* (59 FR 7629, February 16, 1994).

Since tolerances and exemptions that are established on the basis of a petition under section 408(d) of FFDCA, such as the tolerance in this final rule, do not require the issuance of a proposed rule, the requirements of the Regulatory Flexibility Act (RFA) (5 U.S.C. 601 *et seq.*) do not apply.

This final rule directly regulates growers, food processors, food handlers, and food retailers, not States or tribes, nor does this action alter the relationships or distribution of power and responsibilities established by Congress in the preemption provisions of section 408(n)(4) of FFDCA. As such, the Agency has determined that this action will not have a substantial direct effect on States or tribal governments, on the relationship between the national government and the States or tribal governments, or on the distribution of power and responsibilities among the various levels of government or between the Federal Government and Indian tribes. Thus, the Agency has determined that Executive Order 13132, entitled *Federalism* (64 FR 43255, August 10, 1999) and Executive Order 13175, entitled *Consultation and Coordination with Indian Tribal Governments* (65 FR 67249, November 9, 2000) do not apply to this final rule. In addition, this final rule does not impose any enforceable duty or contain any unfunded mandate as described under Title II of the Unfunded Mandates Reform Act of 1995 (UMRA) (Public Law 104–4).

This action does not involve any technical standards that would require Agency consideration of voluntary consensus standards pursuant to section 12(d) of the National Technology Transfer and Advancement Act of 1995 (NTTAA), Public Law 104–113, section 12(d) (15 U.S.C. 272 note).

VII. Congressional Review Act

The Congressional Review Act, 5 U.S.C. 801 *et seq.*, generally provides that before a rule may take effect, the agency promulgating the rule must submit a rule report to each House of the Congress and to the Comptroller General of the United States. EPA will submit a report containing this rule and other required information to the U.S. Senate, the U.S. House of Representatives, and the Comptroller General of the United States prior to publication of this final rule in the **Federal Register**. This final rule is not a ''major rule'' as defined by 5 U.S.C. 804(2).

List of Subjects in 40 CFR Part 180

Environmental protection, Administrative practice and procedure, Agricultural commodities, Pesticides and pests, Reporting and recordkeeping requirements.

Dated: December 2, 2008.

Donald R. Stubbs,

Acting Director, Registration Division, Office of Pesticide Programs.

■ Therefore, 40 CFR chapter I is amended as follows:

PART 180—[AMENDED]

■ 1. The authority citation for part 180 continues to read as follows:

Authority: 21 U.S.C. 321(q), 346a and 371.

■ 2. Section 180.509 is revised to read as follows:

§ 180.509 Mefenpyr-diethyl; tolerance for residues.

(a) *General.* Tolerances are established for residues of the herbicide safener, mefenpyr-diethyl, 1-(2,4-dichlorophenyl)-4,5-dihydro-5-methyl-1H-pyrazole-3,5-dicarboxylic acid, diethyl ester and its 2,4-dichlorophenyl-pyrazoline metabolites, when applied at a rate no greater than 0.053 pound safener per acre per growing season in or on the following raw agricultural commodities:

Commodity	Parts per million
Barley, grain	0.05
Barley, hay	0.2
Barley, straw	0.5
Canola, seed	0.02
Cattle, meat byproducts	0.1
Goat, meat byproducts	0.1
Hog, meat byproducts	0.1
Horse, meat byproducts	0.1
Sheep, meat byproducts	0.1
Wheat, forage	0.2
Wheat, grain	0.05
Wheat, hay	0.2
Wheat, straw	0.5
Soybean forage	0.1
Soybean, hay	0.1
Soybean, seed	0.02

(b) *Section 18 emergency exemptions.* [Reserved]

(c) *Tolerances with regional registrations.* [Reserved]

(d) *Indirect or inadvertant residues.* [Reserved]

[FR Doc. E8–29112 Filed 12–9–08; 8:45 am]

BILLING CODE 6560–50–S

ENVIRONMENTAL PROTECTION AGENCY

40 CFR Part 180

[EPA–HQ–OPP–2007–0438 FRL–8391–5]

Novaluron; Pesticide Tolerances

AGENCY: Environmental Protection Agency (EPA).

ACTION: Final rule.

SUMMARY: This regulation establishes tolerances for residues of novaluron in or on sugarcane, cane and tomato. Interregional Research Project Number 4 (IR-4) requested these tolerances under the Federal Food, Drug, and Cosmetic Act (FFDCA). It also revokes the existing, time-limited tolerance for residues of novaluron in or on sugarcane, cane and revises the chemical name for novaluron in 40 CFR 180.598 to reflect EPA's preferred nomenclature.

DATES: This regulation is effective December 10, 2008. Objections and requests for hearings must be received on or before February 9, 2009, and must be filed in accordance with the instructions provided in 40 CFR part 178 (see also Unit I.C. of the **SUPPLEMENTARY INFORMATION)**.

ADDRESSES: EPA has established a docket for this action under docket identification (ID) number EPA–HQ–OPP–2007–0438. All documents in the docket are listed in the docket index available at *http://www.regulations.gov*. Although listed in the index, some information is not publicly available, *e.g.*, Confidential Business Information (CBI) or other information whose disclosure is restricted by statute. Certain other material, such as copyrighted material, is not placed on the Internet and will be publicly available only in hard copy form. Publicly available docket materials are available in the electronic docket at *http://www.regulations.gov*, or, if only available in hard copy, at the OPP Regulatory Public Docket in Rm. S–4400, One Potomac Yard (South Bldg.), 2777 S. Crystal Dr., Arlington, VA. The Docket Facility is open from 8:30 a.m. to 4 p.m., Monday through Friday, excluding legal holidays. The Docket Facility telephone number is (703) 305–5805.

FOR FURTHER INFORMATION CONTACT: Susan Stanton, Registration Division (7505P), Office of Pesticide Programs, Environmental Protection Agency, 1200 Pennsylvania Ave., NW., Washington, DC 20460–0001; telephone number: (703) 305–5218; e-mail address: *stanton.susan@epa.gov*.

SUPPLEMENTARY INFORMATION:

I. General Information

A. Does this Action Apply to Me?

You may be potentially affected by this action if you are an agricultural producer, food manufacturer, or pesticide manufacturer. Potentially affected entities may include, but are not limited to those engaged in the following activities:

- Crop production (NAICS code 111).
- Animal production (NAICS code 112).
- Food manufacturing (NAICS code 311).
- Pesticide manufacturing (NAICS code 32532).

This listing is not intended to be exhaustive, but rather to provide a guide for readers regarding entities likely to be affected by this action. Other types of entities not listed in this unit could also be affected. The North American Industrial Classification System (NAICS) codes have been provided to assist you and others in determining whether this action might apply to certain entities. If you have any questions regarding the applicability of this action to a particular entity, consult the person listed under **FOR FURTHER INFORMATION CONTACT**.

B. How Can I Access Electronic Copies of this Document?

In addition to accessing electronically available documents at *http://www.regulations.gov*, you may access this **Federal Register** document electronically through the EPA Internet under the "**Federal Register**" listings at *http://www.epa.gov/fedrgstr*. You may also access a frequently updated electronic version of EPA's tolerance regulations at 40 CFR part 180 through the Government Printing Office's e-CFR site at *http://www.gpoaccess.gov/ecfr*.

C. Can I File an Objection or Hearing Request?

Under section 408(g) of FFDCA, 21 U.S.C. 346a, any person may file an objection to any aspect of this regulation and may also request a hearing on those objections. You must file your objection or request a hearing on this regulation in accordance with the instructions provided in 40 CFR part 178. To ensure proper receipt by EPA, you must identify docket ID number EPA–HQ–OPP–2007–0438 in the subject line on the first page of your submission. All requests must be in writing, and must be mailed or delivered to the Hearing Clerk as required by 40 CFR part 178 on or before February 9, 2009.

In addition to filing an objection or hearing request with the Hearing Clerk as described in 40 CFR part 178, please submit a copy of the filing that does not contain any CBI for inclusion in the public docket that is described in **ADDRESSES**. Information not marked confidential pursuant to 40 CFR part 2 may be disclosed publicly by EPA without prior notice. Submit this copy, identified by docket ID number EPA–HQ–OPP–2007–0438, by one of the following methods:

- *Federal eRulemaking Portal*: *http://www.regulations.gov*. Follow the on-line instructions for submitting comments.
- *Mail*: Office of Pesticide Programs (OPP) Regulatory Public Docket (7502P), Environmental Protection Agency, 1200 Pennsylvania Ave., NW., Washington, DC 20460–0001.
- *Delivery*: OPP Regulatory Public Docket (7502P), Environmental Protection Agency, Rm. S–4400, One Potomac Yard (South Bldg.), 2777 S. Crystal Dr., Arlington, VA. Deliveries are only accepted during the Docket Facility's normal hours of operation (8:30 a.m. to 4 p.m., Monday through Friday, excluding legal holidays). Special arrangements should be made for deliveries of boxed information. The Docket Facility telephone number is (703) 305–5805.

II. Petition for Tolerance

In the **Federal Register** of July 25, 2007 (72 FR 40877) (FRL–8137–1), EPA issued a notice pursuant to section 408(d)(3) of FFDCA, 21 U.S.C. 346a(d)(3), announcing the filing of a pesticide petition (PP 7E7199) by Interregional Research Project Number 4 (IR-4), 500 College Road East, Suite 201W, Princeton NJ 08540. The petition requested that 40 CFR 180.598 be amended by establishing tolerances for residues of the insecticide novaluron, 1-[3-chloro-4-(1,1,2-trifluoro-2-trifluoromethoxyethoxy)phenyl]-3-(2,6-difluorobenzoyl)urea, in or on sugarcane, cane at 0.50 parts per million (ppm); tomato at 0.40 ppm; and tomato, paste at 0.80 ppm. That notice referenced a summary of the petition prepared on behalf of IR-4 by Makhteshim-Agan of North America, Inc., the registrant, which is available to the public in the docket, *http://www.regulations.gov*. Comments were received on the notice of filing. EPA's response to these comments is discussed in Unit IV.C.

Based upon review of the data supporting the petition, EPA has increased the tolerance on tomato to 1.0 ppm and determined that a separate tolerance on tomato, paste is not needed. The reasons for these changes are explained in Unit IV.D.

III. Aggregate Risk Assessment and Determination of Safety

Section 408(b)(2)(A)(i) of FFDCA allows EPA to establish a tolerance (the legal limit for a pesticide chemical residue in or on a food) only if EPA determines that the tolerance is ''safe.'' Section 408(b)(2)(A)(ii) of FFDCA defines ''safe'' to mean that ''there is a reasonable certainty that no harm will result from aggregate exposure to the pesticide chemical residue, including all anticipated dietary exposures and all other exposures for which there is reliable information.'' This includes exposure through drinking water and in residential settings, but does not include occupational exposure. Section 408(b)(2)(C) of FFDCA requires EPA to give special consideration to exposure of infants and children to the pesticide chemical residue in establishing a tolerance and to ''ensure that there is a reasonable certainty that no harm will result to infants and children from aggregate exposure to the pesticide chemical residue. . . .''

Consistent with section 408(b)(2)(D) of FFDCA, and the factors specified in section 408(b)(2)(D) of FFDCA, EPA has reviewed the available scientific data and other relevant information in support of this action. EPA has sufficient data to assess the hazards of and to make a determination on aggregate exposure for the petitioned-for tolerances for residues of novaluron on sugarcane, cane at 0.50 ppm and tomato at 1.0 ppm. EPA's assessment of exposures and risks associated with establishing tolerances follows.

A. Toxicological Profile

EPA has evaluated the available toxicity data and considered its validity, completeness, and reliability as well as the relationship of the results of the studies to human risk. EPA has also considered available information concerning the variability of the sensitivities of major identifiable subgroups of consumers, including infants and children.

Novaluron has low acute toxicity via the oral, dermal and inhalation routes of exposure. It is not an eye or skin irritant and is not a dermal sensitizer. In subchronic and chronic toxicity studies, novaluron primarily produced hematotoxic effects such as methemoglobinemia, decreased hemoglobin, decreased hematocrit and decreased red blood corpuscles (RBCs or erythrocytes) associated with increased erythropoiesis.

There was no maternal or developmental toxicity seen in the rat and rabbit developmental toxicity studies up to the limit doses. In the 2-generation reproductive toxicity study in rats, both maternal and offspring toxicity were evidenced by spleenomegaly. Reproductive toxicity (decreases in epididymal sperm counts and increased age at preputial separation in the F1 generation) was observed only in males.

Novaluron does not appear to be a potent neurotoxicant. Signs of neurotoxicity were seen in the acute neurotoxicity study in rats but only at the limit dose of 2,000 milligrams/kilogram/day (mg/kg/day). Neurotoxic signs seen in this study included clinical signs (piloerection, fast/irregular breathing), functional observation battery (FOB) parameters (head swaying, abnormal gait) and neuropathology (sciatic and tibial nerve degeneration). No signs of neurotoxicity or neuropathology were observed in the subchronic neurotoxicity study in rats at doses up to 1,752 mg/kg/day in males and 2,000 mg/kg/day in females or in any other subchronic or chronic toxicity study in rats, mice or dogs.

There was no evidence of carcinogenic potential in either the rat or mouse carcinogenicity studies and no evidence of mutagenic activity in the submitted mutagenicity studies, including a bacterial (*Salmonella, E. coli*) reverse mutation assay, an *in vitro* mammalian chromosomal aberration assay, an *in vivo* mouse bone-marrow micronucleus assay and bacterial DNA damage or repair assay. Based on the results of these studies, EPA has classified novaluron as ''not likely to be carcinogen to humans.''

Specific information on the studies received and the nature of the adverse effects caused by novaluron as well as the no-observed-adverse-effect-level (NOAEL) and the lowest-observed-adverse-effect-level (LOAEL) from the toxicity studies can be found at *http://www.regulations.gov* in document *PP 7E7199 Novaluron in/on Sugarcane and Tomato. Health Effects Division (HED) Risk Assessment*, pages 24 to 27 in docket ID number EPA–HQ–OPP–2007–0438.

B. Toxicological Endpoints

For hazards that have a threshold below which there is no appreciable risk, a toxicological point of departure (POD) is identified as the basis for derivation of reference values for risk assessment. The POD may be defined as the highest dose at which the NOAEL are observed in the toxicology study identified as appropriate for use in risk assessment. However, if a NOAEL cannot be determined, the LOAEL concern are identified or a benchmark dose (BMD) approach is sometimes used for risk assessment. Uncertainty/safety factors (UFs) are used in conjunction with the POD to take into account uncertainties inherent in the extrapolation from laboratory animal data to humans and in the variations in sensitivity among members of the human population as well as other unknowns. Safety is assessed for acute and chronic dietary risks by comparing aggregate food and water exposure to the pesticide to the acute population adjusted dose (aPAD) and chronic population adjusted dose (cPAD). The aPAD and cPAD are calculated by dividing the POD by all applicable UFs. Aggregate short-term, intermediate-term, and chronic-term risks are evaluated by comparing food, water, and residential exposure to the POD to ensure that the margin of exposure (MOE) called for by the product of all applicable UFs is not exceeded. This latter value is referred to as the Level of Concern (LOC).

For non-threshold risks, the Agency assumes that any amount of exposure will lead to some degree of risk. Thus, the Agency estimates risk in terms of the probability of an occurrence of the adverse effect greater than that expected in a lifetime. For more information on the general principles EPA uses in risk characterization and a complete description of the risk assessment process, see *http://www.epa.gov/pesticides/factsheets/riskassess.htm*.

A summary of the toxicological endpoints for novaluron used for human risk assessment can be found at *http://www.regulations.gov* in document *PP-7E7199 Novaluron in/on Sugarcane and Tomato. Health Effects Division (HED) Risk Assessment*, pages 10 to 11 in docket ID number EPA–HQ–OPP–2007–0438.

C. Exposure Assessment

1. *Dietary exposure from food and feed uses*. In evaluating dietary exposure to novaluron, EPA considered exposure under the petitioned-for tolerances as well as all existing novaluron tolerances in 40 CFR 180.598. EPA assessed dietary exposures from novaluron in food as follows:

i. *Acute exposure*. Quantitative acute dietary exposure and risk assessments are performed for a food-use pesticide, if a toxicological study has indicated the possibility of an effect of concern occurring as a result of a 1–day or single exposure. No such effects were identified in the toxicological studies for novaluron; therefore, a quantitative acute dietary exposure assessment is unnecessary.

ii. *Chronic exposure*. In conducting the chronic dietary exposure assessment

EPA used the food consumption data from the United States Department of Agriculture (USDA) 1994–1996 and 1998 Continuing Surveys of Food Intakes by Individuals (CSFII). As to residue levels in food, EPA incorporated anticipated residues (average field trial residues) for some commodities, including the new commodities (sugarcane and tomatoes); empirical processing factors for apple juice (translated to pear juice); and DEEM (ver 7.81) default processing factors for the remaining processed commodities. In estimating dietary exposure from secondary residues in livestock, EPA relied on anticipated residues for meat and milk commodities but used tolerance-level residues for poultry commodities. 100 percent crop treated (PCT) was assumed for all existing and new uses of novaluron.

iii. *Cancer*. Based on the results of carcinogenicity studies in rats and mice, EPA has classified novaluron as ''not likely to be carcinogenic to humans;'' therefore, a quantitative cancer exposure assessment is unnecessary.

iv. *Anticipated residue information*. Section 408(b)(2)(E) of FFDCA authorizes EPA to use available data and information on the anticipated residue levels of pesticide residues in food and the actual levels of pesticide residues that have been measured in food. If EPA relies on such information, EPA must require pursuant to FFDCA section 408(f)(1) that data be provided 5 years after the tolerance is established, modified, or left in effect, demonstrating that the levels in food are not above the levels anticipated. For the present action, EPA will issue such Data Call-Ins as are required by FFDCA section 408(b)(2)(E) and authorized under FFDCA section 408(f)(1). Data will be required to be submitted no later than 5 years from the date of issuance of these tolerances.

2. *Dietary exposure from drinking water*. The residues of concern in drinking water are novaluron and its chlorophenyl urea and chloroaniline degradates. The Agency used screening level water exposure models in the dietary exposure analysis and risk assessment for novaluron and its degradates in drinking water. These simulation models take into account data on the physical, chemical, and fate/transport characteristics of novaluron. Further information regarding EPA drinking water models used in pesticide exposure assessment can be found at *http://www.epa.gov/oppefed1/models/water/index.htm*.

Based on the Pesticide Root Zone Model/Exposure Analysis Modeling System (PRZM/EXAMS) and Screening Concentration in Ground Water (SCI-GROW) models, the estimated drinking water concentrations (EDWCs) of novaluron, chlorophenyl urea and chloroaniline for chronic exposures for non-cancer assessments are estimated to be 1.8 parts per billion (ppb), 0.86 ppb and 2.6 ppb, respectively, for surface water and 0.0055 ppb, 0.0045 ppb and 0.0090 ppb, respectively, for ground water.

Modeled estimates of drinking water concentrations were directly entered into the dietary exposure model. The highest drinking water concentrations were estimated for surface water. Of the three EDWC values for surface water, the chronic EDWC for the terminal metabolite, chloroaniline, is the highest (assuming 100 percent molar conversion from parent to aniline). This is consistent with the expected degradation pattern for novaluron. Therefore, for chronic dietary risk assessment, the water concentration value for chloroaniline of 2.6 ppb was used to assess the contribution to drinking water.

3. *From non-dietary exposure*. The term ''residential exposure'' is used in this document to refer to non-occupational, non-dietary exposure (*e.g.*, for lawn and garden pest control, indoor pest control, termiticides, and flea and tick control on pets). Novaluron is not registered for any specific use patterns that would result in residential exposure.

4. *Cumulative effects from substances with a common mechanism of toxicity*. Section 408(b)(2)(D)(v) of FFDCA requires that, when considering whether to establish, modify, or revoke a tolerance, the Agency consider ''available information'' concerning the cumulative effects of a particular pesticide's residues and ''other substances that have a common mechanism of toxicity.''

EPA has not found novaluron to share a common mechanism of toxicity with any other substances, and novaluron does not appear to produce a toxic metabolite produced by other substances. For the purposes of this tolerance action, therefore, EPA has assumed that novaluron does not have a common mechanism of toxicity with other substances. For information regarding EPA's efforts to determine which chemicals have a common mechanism of toxicity and to evaluate the cumulative effects of such chemicals, see EPA's website at *http://www.epa.gov/pesticides/cumulative*.

D. Safety Factor for Infants and Children

1. *In general*. Section 408(b)(2)(c) of FFDCA provides that EPA shall apply an additional tenfold (10X) margin of safety for infants and children in the case of threshold effects to account for prenatal and postnatal toxicity and the completeness of the database on toxicity and exposure unless EPA determines based on reliable data that a different margin of safety will be safe for infants and children. This additional margin of safety is commonly referred to as the FQPA safety factor (SF). In applying this provision, EPA either retains the default value of 10X, or uses a different additional safety factor when reliable data available to EPA support the choice of a different factor.

2. *Prenatal and postnatal sensitivity*. The prenatal and postnatal toxicology database for novaluron includes rat and rabbit prenatal developmental toxicity studies and a 2–generation reproduction toxicity study in rats. There was no evidence of increased quantitative or qualitative susceptibility following *in utero* exposure of rats or rabbits in the developmental toxicity studies and no evidence of increased quantitative or qualitative susceptibility of offspring in the reproduction study. Neither maternal nor developmental toxicity was seen in the developmental studies up to the limit doses. In the reproduction study, offspring and maternal toxicity (increased absolute and relative spleen weights) were similar and occurred at the same dose; and reproductive effects (decreases in epididymal sperm counts and increased age at preputial separation in the F1 generation) occurred at a higher dose than that which resulted in maternal toxicity.

3. *Conclusion*. EPA has determined that reliable data show the safety of infants and children would be adequately protected if the FQPA SF were reduced to 1X. That decision is based on the following findings:

i. The toxicity database for novaluron is complete, except for immunotoxicity testing. EPA began requiring functional immunotoxicity testing of all food and non-food use pesticides on December 26, 2007. Since this requirement went into effect after the tolerance petition was submitted, these studies are not yet available for novaluron. In the absence of specific immunotoxicity studies, EPA has evaluated the available novaluron toxicity data to determine whether an additional database uncertainty factor is needed to account for potential immunotoxicity. There was no evidence of adverse effects on the organs of the

immune system at the LOAEL in any study novaluron. In addition, novaluron does not belong to a class of chemicals (*e.g.*, the organotins, heavy metals, or halogenated aromatic hydrocarbons) that would be expected to be immunotoxic. Based on the above considerations, EPA does not believe that conducting a special series 870.7800 immunotoxicity study will result in a point of departure less than the NOAEL of 0.011 mg/kg/day used in calculation the cPAD for novaluron, and therefore, an additional database uncertainty factor is not needed to account for potential immunotoxicity.

ii. There were signs of neurotoxicity in the acute neurotoxicity study in rats, including clinical signs (piloerection, fast/irregular breathing), functional observation battery (FOB) parameters (head swaying, abnormal gait) and neuropathology (sciatic and tibial nerve degeneration). However, the signs observed were not severe and were seen only at the limit dose (2,000 mg/kg/day); further, the neuropathological effects that were seen at the limit dose also occurred in a few untreated control animals. No signs of neurotoxicity or neuropathology were observed in the subchronic neurotoxicity study in rats at doses up to 1,752 mg/kg/day in males, and 2,000 mg/kg/day in females or in any other subchronic or chronic toxicity study in rats, mice or dogs, including the developmental and reproduction studies. Therefore, novaluron does not appear to cause significant neurotoxicant effects, and there is no need for a developmental neurotoxicity study or additional UFs to account for neurotoxicity.

iii. There is no evidence that novaluron results in increased susceptibility in *in utero* rats or rabbits in the prenatal developmental studies or in young rats in the 2–generation reproduction study.

iv. There are no residual uncertainties identified in the exposure databases. The dietary food exposure assessments were performed based on 100% CT and tolerance-level or anticipated residues derived from reliable residue field trials. EPA made conservative (protective) assumptions in the ground and surface water modeling used to assess exposure to novaluron in drinking water. Residential exposures are not expected. These assessments will not underestimate the exposure and risks posed by novaluron.

E. Aggregate Risks and Determination of Safety

EPA determines whether acute and chronic pesticide exposures are safe by comparing aggregate exposure estimates to the aPAD and cPAD. The aPAD and cPAD represent the highest safe exposures, taking into account all appropriate SFs. EPA calculates the aPAD and cPAD by dividing the POD by all applicable UFs. For linear cancer risks, EPA calculates the probability of additional cancer cases given the estimated aggregate exposure. Short-term, intermediate-term, and chronic-term risks are evaluated by comparing the estimated aggregate food, water, and residential exposure to the POD to ensure that the MOE called for by the product of all applicable UFs is not exceeded.

1. *Acute risk*. An acute aggregate risk assessment takes into account exposure estimates from acute dietary consumption of food and drinking water. No adverse effect resulting from a single-oral exposure was identified and no acute dietary endpoint was selected. Therefore, novaluron is not expected to pose an acute risk.

2. *Chronic risk*. Using the exposure assumptions described in this unit for chronic exposure, EPA has concluded that chronic exposure to novaluron from food and water will utilize 74% of the cPAD for children 1 to 2 years old, the population group receiving the greatest exposure. Based on the explanation in Unit III.C.3., regarding residential use patterns, chronic residential exposure to residues of novaluron is not expected.

3. *Short-term risk*. Short-term aggregate exposure takes into account short-term residential exposure plus chronic exposure to food and water (considered to be a background exposure level). Novaluron is not registered for any use patterns that would result in residential exposure. Therefore, the short-term aggregate risk is the sum of the risk from exposure to novaluron through food and water and will not be greater than the chronic aggregate risk.

4. *Intermediate-term risk*. Intermediate-term aggregate exposure takes into account intermediate-term residential exposure plus chronic exposure to food and water (considered to be a background exposure level). Novaluron is not registered for any use patterns that would result in intermediate-term residential exposure. Therefore, the intermediate-term aggregate risk is the sum of the risk from exposure to novaluron through food and water, which has already been addressed, and will not be greater than the chronic aggregate risk.

5. *Aggregate cancer risk for U.S. population*. EPA has classified novaluron as ''not likely to be carcinogenic to humans.''Novaluron is not expected to pose a cancer risk.

6. *Determination of safety*. Based on these risk assessments, EPA concludes that there is a reasonable certainty that no harm will result to the general population, or to infants and children from aggregate exposure to novaluron residues.

IV. Other Considerations

A. Analytical Enforcement Methodology

Adequate enforcement methodology (a gas chromatography/electron-capture detection (GC/ECD) method; and a high pressure liquid chromatography/ultraviolate detection (HPLC/UV) method) is available to enforce the tolerance expression. The methods may be requested from: Chief, Analytical Chemistry Branch, Environmental Science Center, 701 Mapes Rd., Ft. Meade, MD 20755–5350; telephone number: (410) 305–2905; e-mail address: *residuemethods@epa.gov*.

B. International Residue Limits

No Canadian or Mexican MRLs have been established for novaluron on the sugarcane or tomato commodities. A CODEX MRL is established for novaluron (fat soluble) on tomato at 0.02 ppm, significantly below the U.S. tolerance being established by this regulation (1.0 ppm). The U.S. tolerance is based on a different use pattern, including both a higher application rate (12.8x higher) and shorter pre-harvest interval (PHI) (2 days vs. 7 days). For these reasons, the U.S. tolerance cannot be harmonized with the CODEX MRL at this time.

C. Response to Comments

EPA received comments from a private citizen complaining that she was unable to open the ''proposal'' at *http://www.regulations.gov*. If by ''proposal,'' the commenter is referring to the registrant's notice of filing, EPA notes that it is available in the docket in two common file formats, MicroSoft Word and Portable Document Format (PDF) and cannot explain the commenter's inability to open it. User support is available for anyone having trouble using the regulations website by calling 1–877-ERUL HLP (1–877–378–5457) or by using the Web form link provided under ''Contact Us.''

D. Revisions to Petitioned-For Tolerances

Based upon review of the data supporting the petition, EPA determined that the proposed tolerance on tomato should be increased to 1.0 ppm and that a separate tolerance on tomato paste is not needed. EPA revised the tolerance level for tomato based on analyses of both field- and greenhouse-

grown residue trials using the Agency's Tolerance Spreadsheet in accordance with the *Agency's Guidance for Setting Pesticide Tolerances Based on Field Trial Data*. The tolerance level of 1.0 ppm is based on the spreadsheet results for greenhouse-grown tomatoes, the cropping scenario that resulted in the higher recommended tolerance. The submitted tomato processing data indicate that residues of novaluron are not likely to concentrate in puree but may concentrate slightly in paste. Based on the processing factor (1.1x) for paste and the highest average field trial (HAFT) residue of 0.365 ppm from the tomato trials, residues of novaluron in paste are not expected to exceed the tolerance for tomato (1.0 ppm); therefore, no tolerances for tomato processed commodities are needed.

The tolerance expression at 40 CFR 180.598 uses the International Union of Pure and Applied Chemistry (IUPAC) nomenclature for novaluron (1-[3-chloro-4-(1,1,2-trifluoro-2-trifluoromethoxyethoxy)phenyl]-3-(2,6-difluorobenzoyl)urea). Since it is EPA's policy to use the Chemical Abstracts Service (CAS) nomenclature in tolerance expressions, EPA is revising the tolerance expression to reflect the correct CAS designation for novaluron (*N*-[[[3-chloro-4-[1,1,2-trifluoro-2-(trifluoromethoxy)ethoxy] phenyl]amino]carbonyl]-2,6-difluorobenzamide). EPA has determined that it is reasonable to make this change final without prior proposal and opportunity for comment, because public comment is not necessary, in that the change has no substantive effect on the tolerance, but rather is a minor change in scientific nomenclature consistent with accepted Agency policy and practice.

V. Conclusion

Therefore, tolerances are established for residues of novaluron, *N*-[3-chloro-4-[1,1,2-trifluoro-2-(trifluoromethoxy)ethoxy] phenyl]amino]carbonyl]-2,6-difluorobenzamide, in or on sugarcane, cane at 0.50 ppm and tomato at 1.0 ppm.

A time-limited tolerance of 0.15 ppm was established for residues of novaluron on sugarcane, cane in connection with a FIFRA section 18 emergency exemption granted by EPA. This tolerance (set to expire on 12/31/09) is superseded by the higher tolerance being established on sugarcane, cane and is no longer needed. Therefore, the time-limited tolerance is being revoked.

VI. Statutory and Executive Order Reviews

This final rule establishes tolerances under section 408(d) of FFDCA in response to a petition submitted to the Agency. The Office of Management and Budget (OMB) has exempted these types of actions from review under Executive Order 12866, entitled *Regulatory Planning and Review* (58 FR 51735, October 4, 1993). Because this final rule has been exempted from review under Executive Order 12866, this final rule is not subject to Executive Order 13211, entitled *Actions Concerning Regulations That Significantly Affect Energy Supply, Distribution, or Use* (66 FR 28355, May 22, 2001) or Executive Order 13045, entitled *Protection of Children from Environmental Health Risks and Safety Risks* (62 FR 19885, April 23, 1997). This final rule does not contain any information collections subject to OMB approval under the Paperwork Reduction Act (PRA), 44 U.S.C. 3501 *et seq.*, nor does it require any special considerations under Executive Order 12898, entitled *Federal Actions to Address Environmental Justice in Minority Populations and Low-Income Populations* (59 FR 7629, February 16, 1994).

Since tolerances and exemptions that are established on the basis of a petition under section 408(d) of FFDCA, such as the tolerance in this final rule, do not require the issuance of a proposed rule, the requirements of the Regulatory Flexibility Act (RFA) (5 U.S.C. 601 *et seq.*) do not apply.

This final rule directly regulates growers, food processors, food handlers, and food retailers, not States or tribes, nor does this action alter the relationships or distribution of power and responsibilities established by Congress in the preemption provisions of section 408(n)(4) of FFDCA. As such, the Agency has determined that this action will not have a substantial direct effect on States or tribal governments, on the relationship between the national government and the States or tribal governments, or on the distribution of power and responsibilities among the various levels of government or between the Federal Government and Indian tribes. Thus, the Agency has determined that Executive Order 13132, entitled *Federalism* (64 FR 43255, August 10, 1999) and Executive Order 13175, entitled *Consultation and Coordination with Indian Tribal Governments* (65 FR 67249, November 9, 2000) do not apply to this final rule. In addition, this final rule does not impose any enforceable duty or contain any unfunded mandate as described under Title II of the Unfunded Mandates Reform Act of 1995 (UMRA) (Public Law 104–4).

This action does not involve any technical standards that would require Agency consideration of voluntary consensus standards pursuant to section 12(d) of the National Technology Transfer and Advancement Act of 1995 (NTTAA), Public Law 104–113, section 12(d) (15 U.S.C. 272 note).

VII. Congressional Review Act

The Congressional Review Act, 5 U.S.C. 801 *et seq.*, generally provides that before a rule may take effect, the agency promulgating the rule must submit a rule report to each House of the Congress and to the Comptroller General of the United States. EPA will submit a report containing this rule and other required information to the U.S. Senate, the U.S. House of Representatives, and the Comptroller General of the United States prior to publication of this final rule in the **Federal Register**. This final rule is not a ''major rule'' as defined by 5 U.S.C. 804(2).

List of Subjects in 40 CFR Part 180

Environmental protection, Administrative practice and procedure, Agricultural commodities, Pesticides and pests, Reporting and recordkeeping requirements.

Dated: November 25, 2008.

Lois Rossi,

Director, Registration Division, Office of Pesticide Programs.

■ Therefore, 40 CFR chapter I is amended as follows:

PART 180—[AMENDED]

■ 1. The authority citation for part 180 continues to read as follows:

Authority: 21 U.S.C. 321(q), 346a and 371.

■ 2. Section 180.598 is amended by removing the entry for sugarcane, cane from the table in paragraph (b); revising paragraph (a) introductory text and alphabetically adding the following commodities to the table in paragraph (a) to read as follows:

§ 180.598 Novaluron; tolerances for residues.

(a) *General.* Tolerances are established for residues of the insecticide novaluron, *N*-[[[3-chloro-4-[1,1,2-trifluoro-2-(trifluoromethoxy)ethoxy] phenyl]amino]carbonyl]-2,6-difluorobenzamide, in or on the following raw agricultural commodities:

Commodity	Parts per million
* * * * *	
Sugarcane, cane	0.50
Tomato	1.0
* * * * *	

* * * * *

* * * * *

[FR Doc. E8–29117 Filed 12–9–08; 8:45 am]

BILLING CODE 6560–50–S

ENVIRONMENTAL PROTECTION AGENCY

40 CFR Parts 220, 221, 222, 223, 224, 227, and 228

[FRL–8748–4]

RIN 2040–AF01

Repeal of Obsolete Regulations Under the Marine Protection, Research, and Sanctuaries Act Regarding Interim Ocean Dumping Sites, Interim Ocean Dumping Permits, and Interim Ocean Dumping Criteria

AGENCY: Environmental Protection Agency (EPA).

ACTION: Final rule.

SUMMARY: EPA is taking final action to repeal expired, and therefore, obsolete regulatory provisions regarding interim ocean dumping sites, interim ocean dumping permits, and interim ocean dumping criteria. Repeal of all reference to ''interim'' provisions is necessary based on legislation enacted since promulgation of the reference, EPA action since promulgation of the reference, or the passage of a date specified in a definition of the reference. This action does not make any substantive changes to EPA's ocean dumping regulations. This is a housekeeping measure intended only to eliminate confusion by repealing obsolete regulatory text.

DATES: This rule is effective on January 9, 2009.

FOR FURTHER INFORMATION CONTACT: David Redford, Oceans and Coastal Protection Division, Office of Wetlands, Oceans, and Watersheds, 4504T, Environmental Protection Agency, 1200 Pennsylvania Ave., NW., Washington, DC 20460; telephone number: 202–566–1288; fax number: 202–566–1546; e-mail address: *redford.david@epa.gov*.

SUPPLEMENTARY INFORMATION:

I. Overview

Amendments enacted in 1992 to the Marine Protection, Research, and Sanctuaries Act (MPRSA) require that no permits for ocean dumping shall be issued for an EPA-established ocean dumping site after January 1, 1997, unless the site has received a final designation; therefore, interim ocean dumping sites that have not received a final designation are no longer available for use. Under EPA regulations, the authority to issue interim ocean dumping permits expired on April 23, 1978, and interim permits are no longer issued. Under EPA regulations, interim criteria for constituents prohibited as other than trace contaminants in material proposed for ocean dumping, as well as interim guidance used to determine the limiting permissible concentration for the suspended particulate and solid phases of the material proposed to be dumped, were applicable only until EPA announced the availability of acceptable procedures to evaluate materials for ocean dumping. On April 4, 1991, EPA and the U.S. Army Corps of Engineers announced the availability of a testing manual for dredged material entitled ''Evaluation of Dredged Material Proposed for Ocean Disposal—Testing Manual,'' which revised the 1977 EPA/U.S. Army Corps of Engineers document, ''Ecological Evaluation of Proposed Discharge of Dredged Material into Ocean Waters.'' In addition, EPA published ''Bioassay Procedures for the Ocean Disposal Permit Program,'' which outlines acceptable procedures for non-dredged material.

II. Background

A. Potentially Affected Entities

Generally, ocean dumping sites and permits are used by persons, organizations, or government bodies seeking to dispose of dredged material or other material in ocean waters. However, there are no regulated entities potentially affected by this action, because all of the regulatory provisions being repealed have expired, and therefore, have become obsolete (see Section III below). Nothing in this action alters the jurisdiction or authority of EPA or the entities regulated under the Marine Protection, Research, and Sanctuaries Act.

B. Marine Protection, Research, and Sanctuaries Act

The Marine Protection, Research, and Sanctuaries Act of 1972, as amended, also known as the Ocean Dumping Act, regulates the transportation and dumping of material into ocean waters. Under the MPRSA, no permit may be issued for ocean dumping where such dumping will unreasonably degrade or endanger human health or the marine environment. Most material ocean dumped today is dredged material (i.e., sediments) removed from the bottom of water bodies to maintain navigation channels and berthing areas. Other materials that are currently disposed of in the ocean include fish wastes, human remains, and vessels.

Ocean dumping cannot occur except pursuant to a permit under the MPRSA and its implementing regulations. The U.S. Army Corps of Engineers (USACE) issues permits for dumping dredged material in the ocean, using EPA's environmental criteria and subject to EPA's concurrence. For all other materials, EPA is the permitting agency. EPA also is responsible for designating recommended ocean dumping sites for all types of materials, including dredged material. EPA's ocean dumping regulations at 40 CFR Part 228 establish procedures for the designation and management of ocean disposal sites and list the available EPA-designated ocean dumping sites by EPA Region (40 CFR 228.15).

C. Interim Ocean Dumping Sites, Permits, Criteria, and Guidance

When EPA originally promulgated the ocean dumping regulations in the 1970's, the Agency made provisions for interim ocean dumping sites, interim ocean dumping permits, and interim ocean dumping criteria. These interim provisions were designed to be temporary measures that would expire under certain conditions, primarily when final sites were designated and criteria were established. As described in Section III below, all provisions related to interim ocean dumping sites, interim permits, interim criteria, and interim guidance have expired and are therefore obsolete.

III. This Final Rule

This final rule repeals expired and therefore obsolete regulatory references to interim ocean dumping sites, interim ocean dumping permits, interim ocean dumping criteria, and interim guidance. This rule does not make any substantive changes to EPA's ocean dumping regulations. This is a housekeeping measure intended only to eliminate confusion by repealing obsolete regulatory text.

A. Interim Ocean Dumping Sites

After the enactment of the MPRSA in 1972, EPA designated interim ocean dumping sites prior to the completion of environmental studies on the basis of historical uses. These ''interim'' designations were intended to facilitate a smooth transition to regulation under the MPRSA and to allow time for the necessary environmental studies to be completed. Once the necessary environmental studies were performed, many of the interim sites were designated by EPA as final designated sites if the sites met the MPRSA regulatory environmental criteria. Although EPA published the interim sites list when the Agency proposed the ocean dumping criteria in 1973, EPA did not publish the interim sites list in a separate regulation until 1977. In 1994, EPA codified the interim site list at 40 CFR 228.14.

Initially, the 1977 regulations stated ''the list of interim sites will remain in force for a period not to exceed three years from the date of promulgation of this Part 228, except for those sites approved for continuing use or disapproved for use by promulgation in this Part.'' After a series of extensions to the expiration requirements for interim site designations, Congress amended the MPRSA in 1992 to require that no permits for ocean dumping shall be issued for an ocean dumping site after January 1, 1997, unless the site had received a final designation (section 506 of the Water Resources Development Act of 1992; codified at 33 U.S.C. 1412(c)(4)). In other words, ocean dumping permits could no longer be issued for interim dumping sites after January 1, 1997. Today's action repeals the list of interim ocean dumping sites found at 40 CFR 228.14, as well as the regulatory references to interim ocean dumping sites found at 40 CFR 228.2(a), 228.3(b), 228.4(b), and 228.5(c).

The 1992 MPRSA amendments that abolished interim ocean dumping sites, as well as subsequent amendments to the MPRSA, expressly retained the authority of EPA and the U.S. Army Corps of Engineers to issue permits for use of a specific interim dredged material ocean dumping site near Newport Beach, California (known as ''LA–3'') beyond the 1997 deadline pending final site designation. Because EPA promulgated a final site designation for the LA–3 site (70 FR 53729), the interim site designation for LA–3 is unnecessary and has become moot. Today, EPA repeals the interim site designation for LA–3 along with the other interim site designations. Today's action does not prevent the U.S. Army Corps of Engineers, however, from using any site as an ''alternative site'' for the disposal of dredged material subject to the provisions of MPRSA section 103(b) even if that alternative site also had been designated previously as an interim site. Similarly, today's action does not preclude the use of any site designed for use at 40 CFR 227.15, even if that site had also been designated as an interim site previously.

B. Interim Ocean Dumping Permits

In 1977, EPA promulgated regulations establishing five types of ocean dumping permits: Special, general, interim, research, and emergency (42 FR 2468; 40 CFR 220.3). Under these regulations, interim permits could be issued prior to April 23, 1978, for the dumping of materials that did not comply with the environmental impact criteria published at 40 CFR part 227, subpart B, or that would have caused substantial adverse effects as determined in accordance with the criteria published at 40 CFR part 227, subparts D or E, or for which an ocean disposal site had not been designated on other than an interim basis (40 CFR 220.3(d)). EPA Regional Administrators had the discretion to exempt existing site users from the April 23, 1978, interim permit issuance deadline. The 1977 regulations also included an implementation schedule to allow phasing out of interim ocean dumping permits or compliance with all requirements necessary to receive a special permit by December 31, 1981, at the latest. Consequently, under certain circumstances, the Regional Administrators could only extend the deadline to December 31, 1981. Interim permits were required to specify an expiration date no later than one year from issuance.

The regulatory provisions regarding interim permits are expired and therefore obsolete. The authority to issue interim permits lapsed over 30 years ago. Any interim permit issued has long since expired. This action repeals the obsolete regulatory provisions regarding interim ocean dumping permits found in the 40 CFR parts 220, 221, 222, 223, 224, 227 (especially subpart F), and 228.

C. Interim Ocean Dumping Criteria and Interim Guidance on Test Procedures

EPA promulgated ''interim criteria'' for constituents prohibited as other than trace contaminants in material proposed for ocean dumping (40 CFR 227.6(e)) in 1977. At that time, EPA and the Army Corps of Engineers had not yet completed the development of acceptable bioassay procedures to determine if material proposed for ocean dumping would cause unacceptable toxicity or bioaccumulation under 40 CFR 227.6(c)(2) and (3). The interim criteria allowed the use of numerical constituent levels for suspended particulate and solid phases of the material proposed for dumping until EPA announced the availability of acceptable bioassay procedures to implement the criteria found at 40 CFR 227.6(c)(2) and (3).

The regulations contain another ''interim'' reference relevant to the bioassay test procedures. A footnote to the regulation at 40 CFR 227.27(b) explains that EPA and the Army Corps of Engineers would develop an implementation manual regarding the use of bioassays to determine the limiting permissible concentration for the suspended particulate and solid phases of the material proposed to be dumped, and that announcement of the availability of the manual would be published in the **Federal Register**. The footnote explained how to obtain ''interim guidance'' on appropriate procedures until the manual was available. EPA is deleting the footnote because the manual has since been made available in the **Federal Register**. 56 FR 13826. That document, entitled ''Evaluation of Dredged Material Proposed for Ocean Disposal—Testing Manual,'' revised the interim guidance (published in 1977) called ''Ecological Evaluation of Proposed Discharge of Dredged Material into Ocean Waters.''

In addition to the jointly developed implementation manual relevant to the testing of dredged material, EPA also has developed a guidance manual for the testing of non-dredged material called ''Bioassay Procedures for the Ocean Disposal Permit Program.'' In publishing a 1980 final rule promulgating guidelines under the Clean Water Act section 403(c) (45 FR 65942), EPA explained that this guidance document was to be used to demonstrate that a discharge would not exceed the limiting permissible concentration for non-dredged material. EPA noted the availability of this

document again in 1996, in a proposed rule that clarified certain provisions of the Agency's ocean dumping regulations relating to requirements for bioassay testing. 61 FR 7765, 7767.

Because EPA has previously announced the availability of acceptable procedures to implement the criteria found at 40 CFR 227.6(c)(2) and (3), today's action repeals the obsolete regulatory provisions regarding interim ocean dumping criteria found in 40 CFR 227.6(e). For the same reason, the footnote to 40 CFR 227.27(b) and its reference to ''interim guidance'' have become obsolete and EPA is removing the footnote today. EPA is also removing the final clause of § 227.27(d) because the reference to ''interim guidance'' is no longer necessary.

IV. Statutory and Executive Order Reviews

A. Administrative Procedure Act

Under the Administrative Procedure Act (APA), agencies generally are required to publish a notice of proposed rulemaking and provide an opportunity for the public to comment on any substantive rulemaking action. Prior notice and comment is not required, however, when the agency for good cause finds (and incorporates the finding and a brief statement of reasons therefore in the rules issued) that notice and public procedure thereon are impracticable, unnecessary, or contrary to the public interest. 5 U.S.C. 553(b)(B).

EPA has determined that providing prior notice and opportunity for comment on the repeal of obsolete regulatory provisions from the Code of Federal Regulations regarding interim ocean dumping sites, interim ocean dumping permits, interim ocean dumping criteria, and interim guidance is unnecessary. The interim authority by which interim sites could be used expired in January 1997 according to Section 506 of the Water Resources Development Act of 1992, which rendered the regulatory references obsolete. The authority to issue interim permits and the authority for existing dumpers to use interim permits, lapsed over thirty years ago. The interim criteria became obsolete after EPA announced the availability of implementation manuals for the final criteria. The interim guidance identified in the footnote became obsolete for the same reason. Thus, withdrawing the regulatory references to interim sites, interim permits, interim criteria, and interim guidance from the Code of Federal Regulations has no legal impact and merely codifies the current legal status quo.

B. Paperwork Reduction Act

This final rule does not impose an information collection burden under the provisions of the Paperwork Reduction Act, 44 U.S.C. 3501 *et seq.* Burden is defined at 5 CFR 1320.3(b). This is because it merely conforms the published regulatory text with current legal requirements, as explained above. It does not establish or modify any information reporting, or recordkeeping requirements, and therefore is not subject to the requirements of the Paperwork Reduction Act.

C. Other Statutes and Executive Orders

This rule does not establish any new requirements, mandates, or procedures. As explained above, this final action merely repeals obsolete regulations regarding interim ocean dumping sites, interim ocean dumping permits, interim ocean dumping criteria, and interim guidance. This rule is a housekeeping measure to remove these obsolete provisions from the Code of Federal Regulations. The rule does not result in any additional or new regulatory requirements. Accordingly, it has been determined that this rule is not a ''significant regulatory action'' under Executive Order 12866, and therefore is not subject to review by the Office of Management and Budget. In addition, this action does not impose any enforceable duty, contain any unfunded mandate, or impose any significant or unique impact on small governments as described in the Unfunded Mandates Reform Act of 1995 (Pub. L. 104–4). This rule also does not impose any federalism requirements or require prior consultation with tribal government officials as specified by Executive Order 13132 (64 FR 43255) or Executive Order 13175 (65 FR 67249). This rule does not involve special consideration of environmental justice-related issues as required by Executive Order 12898 (59 FR 7629). This rule is not subject to Executive Order 13211 (66 FR 28355) because it is not a significant regulatory action under Executive Order 12866. Because this action is not subject to notice-and-comment requirements under the APA or any other statute, and because it does not impose any new requirements on small entities, it is not subject to the regulatory flexibility provisions of the Regulatory Flexibility Act (5 U.S.C. 601 *et seq.*) This rule is not subject to Executive Order 13045 (62 FR 19885) because it is not economically significant as defined under Executive Order 12866. Because this rule does not involve technical standards, EPA did not consider the use of any voluntary consensus standards. Therefore, this rule is not subject to section 12(d) of the National Technology Transfer and Advancement Act of 1995, Public Law 104–113, section 12(d) (15 U.S.C. 272 note). Further, this rule is not subject to Executive Order 13045 because it does not establish an environmental standard intended to mitigate health or safety risks.

The Congressional Review Act (CRA), 5 U.S.C. 801 *et seq.* as added by the Small Business Regulatory Enforcement Fairness Act of 1996, generally provides that before a rule may take effect, the agency promulgating the rule must submit a rule report, which includes a copy of the rule, to each House of the Congress and to the Comptroller General of the United States. Section 808 allows the issuing agency to make a rule effective sooner than otherwise provided by the CRA if the agency makes a good cause finding that notice and public procedure is impracticable, unnecessary or contrary to the public interest. This determination must be supported by a brief statement. 5 U.S.C. 808(2). As stated previously, EPA has made such a good cause finding, including the reasons stated, and established an effective date of January 9, 2009. Therefore, EPA will submit a report containing this rule and other required information to the U.S. Senate, the U.S. House of Representatives, and the Comptroller General of the United States prior to publication of this rule in the **Federal Register**. This action is not a ''major rule'' as defined by 5 U.S.C. 804(2).

List of Subjects

40 CFR Part 220

Environmental protection, Water pollution control.

40 CFR Parts 221, 222, and 223

Administrative practice and procedure, Environmental protection, Water pollution control.

40 CFR Part 224

Environmental protection, Reporting and recordkeeping requirements, Water pollution control.

40 CFR Part 227

Environmental protection, Environmental impact statements, Water pollution control.

40 CFR Part 228

Environmental protection, Water pollution control.

Dated: November 26, 2008.

Benjamin H. Grumbles,

Assistant Administrator for Water.

■ In consideration of the foregoing, Subchapter H of chapter I of title 40 is amended as follows:

PART 220—[AMENDED]

■ 1. The authority citation for part 220 continues to read as follows:

Authority: 33 U.S.C. 1412 and 1418.

■ 2. Amend § 220.3 as follows:
■ a. By revising the introductory text.
■ b. By removing and reserving paragraph (d).
■ c. By revising paragraph (f).

§ 220.3 Categories of permits.

This § 220.3 provides for the issuance of general, special, emergency, and research permits for ocean dumping under section 102 of the Act.

* * * * *

(f) *Permits for incineration at sea.* Permits for incineration of wastes at sea will be issued only as research permits until specific criteria to regulate this type of disposal are promulgated, except in those cases where studies on the waste, the incineration method and vessel, and the site have been conducted and the site has been designated for incineration at sea in accordance with the procedures of § 228.4(b) of this chapter. In all other respects the requirements of parts 220 through 228 apply.

■ 3. Amend § 220.4 by revising paragraph (a) and paragraph (b) introductory text to read as follows:

§ 220.4 Authorities to issue permits.

(a) *Determination by Administrator.* The Administrator, or such other EPA employee as he may from time to time designate in writing, shall issue, deny, modify, revoke, suspend, impose conditions on, initiate and carry out enforcement activities and take any and all other actions necessary or proper and permitted by law with respect to general, special, emergency, or research permits.

(b) *Authority delegated to Regional Administrators.* Regional Administrators, or such other EPA employees as they may from time to time designate in writing, are delegated the authority to issue, deny, modify, revoke, suspend, impose conditions on, initiate and carry out enforcement activities, and take any and all other actions necessary or proper and permitted by law with respect to special permits for:

* * * * *

PART 221—[AMENDED]

■ 4. The authority citation for part 221 continues to read as follows:

Authority: 33 U.S.C. 1412 and 1418.

■ 5. Amend § 221.1 by revising the introductory text to read as follows:

§ 221.1 Applications for permits.

Applications for general, special, emergency, and research permits under section 102 of the Act may be filed with the Administrator or the appropriate Regional Administrator, as the case may be, authorized by § 220.4 of this chapter to act on the application. Applications shall be made in writing and shall contain, in addition to any other material which may be required, the following:

* * * * *

PART 222—[AMENDED]

■ 6. The authority citation for part 222 continues to read as follows:

Authority: 33 U.S.C. 1412 and 1418.

■ 7. Revise § 222.1 to read as follows:

§ 221.1 General.

Decisions as to the issuance, denial, or imposition of conditions on general, special, emergency, and research permits under section 102 of the Act will be made by application of the criteria of parts 227 and 228 of this chapter. Final action on any application for a permit will, to the extent practicable, be taken within 180 days from the date a complete application is filed.

■ 8. Amend § 222.3 by revising paragraphs (a) introductory text and (b)(1) introductory text as follows:

§ 222.3 Notice of applications.

(a) *Contents.* Notice of every complete application for a general, special, emergency and research permit shall, in addition to any other material, include the following:

* * * * *

(b) * * * (1) *Special and research permits.* Notice of every complete application for special and research permits shall be given by:

* * * * *

PART 223—[AMENDED]

■ 9. The authority citation for part 223 continues to read as follows:

Authority: Secs. 102, 104, 107, 108, Marine Protection Research, and Sanctuaries Act of 1972, as amended (33 U.S.C. 1412, 1414, 1417, 1418).

■ 10. Amend § 223.1 as follows:
■ a. By revising the section heading.
■ b. By revising paragraph (a) introductory text.
■ c. By removing and reserving paragraph (c).

§ 223.1 Contents of special, emergency, general, and research permits; posting requirements.

(a) All special, emergency and research permits shall be displayed on the vessel engaged in dumping and shall include the following:

* * * * *

■ 11. Amend § 223.3 by revising paragraph (a) introductory text to read as follows:

§ 223.3 Preliminary determination; notice.

(a) General. Any general, special, emergency, or research permit issued pursuant to section 102 of the Act shall be subject to revision, revocation or limitation, in whole or in part, as the result of a determination by the Administrator or Regional Administrator that:

* * * * *

PART 224—[AMENDED]

■ 12. The authority citation for part 224 continues to read as follows:

Authority: 33 U.S.C. 1412 and 1418.

■ 13. Amend § 224.1 by revising the introductory text to read as follows:

§ 224.1 Records of permittees.

Each permittee named in a special, emergency or research permit under section 102 of the Act and each person availing himself of the privilege conferred by a general permit, shall maintain complete records of the following information, which will be available for inspection by the Administrator, Regional Administrator, the Commandant of the U.S. Coast Guard, or their respective designees:

* * * * *

PART 227—[AMENDED]

■ 14. The authority citation for part 227 continues to read as follows:

Authority: 33 U.S.C. 1412 and 1418.

Subpart A—[Amended]

■ 15. Amend § 227.2 by revising paragraph (b) to read as follows:

§ 227.2 Materials which satisfy the environmental impact criteria of subpart B.

* * * * *

(b) If the material proposed for ocean dumping satisfies the environmental impact criteria set forth in subpart B, but the Administrator or the Regional

Administrator, as the case may be, determines that any one of the considerations set forth in paragraph (a)(1), (2) or (3) of this section applies, he or she, as the case may be, will deny the permit application.

* * * * *

■ 16. Revise § 227.3 to read as follows:

§ 227.3 Materials which do not satisfy the environmental impact criteria set forth in subpart B.

If the material proposed for ocean dumping does not satisfy the environmental impact criteria of subpart B of this part, the Administrator or the Regional Administrator, as the case may be, will deny the permit application.

Subpart B—[Amended]

■ 17. Amend § 227.6 by revising paragraph (e) to read as follows:

§ 227.6 Constituents prohibited as other than trace contaminants.

* * * * *

(e) The criteria stated in paragraphs (c)(2) and (3) of this section are mandatory. The availability of acceptable procedures was announced in the **Federal Register** in 1991 and 1996.

* * * * *

Subpart F—[Amended]

■ 18. Amend part 227 by removing and reserving subpart F, consisting of § 227.23 through § 227.26.

Subpart G—[Amended]

■ 19. Amend § 227.27 by removing footnote 1 from paragraph (b) and revising paragraph (d) to read as follows:

§ 227.27 Limiting permissible concentration (LPC).

* * * * *

(d) Appropriate sensitive benthic marine organisms means two or more species that together represent filter-feeding, deposit-feeding, and burrowing characteristics. These organisms shall be chosen from among the species that are most sensitive for each type they represent, and that are documented in the scientific literature and accepted by EPA as being reliable test organisms to determine the anticipated impact on the site.

PART 228—[AMENDED]

■ 20. The authority citation for part 228 continues to read as follows:

Authority: 33 U.S.C. 1412 and 1418.

■ 21. Amend § 228.2 by revising paragraph (a) to read as follows:

§ 228.2 Definitions.

(a) The term disposal site means a finally approved and precise geographical area within which ocean dumping of wastes is permitted under conditions specified in permits issued under sections 102 and 103 of the Act. Such sites are identified by boundaries established by coordinates of latitude and longitude for each corner, or by coordinates of latitude and longitude for the center point and a radius in nautical miles from that point. Boundary coordinates shall be identified as precisely as is warranted by the accuracy with which the site can be located with existing navigational aids or by the implantation of transponders, buoys or other means of marking the site.

* * * * *

■ 22. Amend § 228.3 by revising paragraph (b) to read as follows:

§ 228.3 Disposal site management responsibilities.

* * * * *

(b) Each site, upon final designation, will be assigned to either an EPA Regional office or to EPA Headquarters for management. These designations will be consistent with the delegation of authority in § 220.4 of this chapter. The designated management authority is fully responsible for all aspects of the management of sites within the general requirements specified in § 220.4 and this chapter. Specific requirements for meeting the management responsibilities assigned to the designated management authority for each site are outlined in §§ 228.5 and 228.6.

■ 23. Amend § 228.4 by revising paragraph (b) to read as follows:

§ 228.4 Procedures for designation of sites.

* * * * *

(b) *Special permits.* Areas where ocean dumping is permitted subject to the specific conditions of individual special permits, will be designated by promulgation in this part 228, and such designation will be made based on environmental studies of each site, regions adjacent to the site, and on historical knowledge of the impact of waste disposal on areas similar to such sites in physical, chemical, and biological characteristics. All studies for the evaluation and potential selection of dumping sites will be conducted in accordance with the requirements of §§ 228.5 and 228.6. The Administrator may, from time to time, designate specific locations for temporary use for disposal of small amounts of materials under a special permit only without disposal site designation studies when such materials satisfy the Criteria and the Administrator determines that the quantities to be disposed of at such sites will not result in significant impact on the environment. Such designations will be done by promulgation in this part 228, and will be for a specified period of time and for specified quantities of materials.

* * * * *

§ 228.5 [Amended]

■ 24. Amend § 228.5 by removing and reserving paragraph (c).

■ 25. Revise § 228.8 to read as follows:

§ 228.8 Limitations on times and rates of disposal.

Limitations as to time for and rates of dumping may be stated as part of the promulgation of site designation. The times and the quantities of permitted material disposal will be regulated by the EPA management authority so that the limits for the site as specified in the site designation are not exceeded. This will be accomplished by the denial of permits for the disposal of some materials, by the imposition of appropriate conditions on other permits and, if necessary, the designation of new disposal sites under the procedures of § 228.4. In no case may the total volume of material disposed of at any site under special permits cause the concentration of the total materials or any constituent of any of the materials being disposed of at the site to exceed limits specified in the site designation.

■ 26. Amend part 228 by removing and reserving § 228.14.

[FR Doc. E8–28842 Filed 12–9–08; 8:45 am]

BILLING CODE 6560–50–P

DEPARTMENT OF COMMERCE

National Oceanic and Atmospheric Administration

50 CFR Part 679

[Docket No. 071106673–8011–02]

RIN 0648–XM17

Fisheries of the Exclusive Economic Zone Off Alaska; Reallocation of Pacific Cod in the Bering Sea and Aleutian Islands Management Area

AGENCY: National Marine Fisheries Service (NMFS), National Oceanic and Atmospheric Administration (NOAA), Commerce.

ACTION: Temporary rule; reallocation.

SUMMARY: NMFS is reallocating projected unused amounts of Pacific cod from catcher vessels using trawl gear, catcher vessels using pot gear, and vessels using jig gear to American Fisheries Act (AFA) catcher processor vessels, catcher processor vessels using pot gear, and catcher processor vessels using hook–and–line gear in the Bering Sea and Aleutian Islands management area (BSAI). These actions are necessary to allow the 2008 total allowable catch (TAC) of Pacific cod to be harvested.

DATES: Effective December 5, 2008, until 2400 hours, A.l.t., December 31, 2008.

FOR FURTHER INFORMATION CONTACT: Josh Keaton, 907–586–7228.

SUPPLEMENTARY INFORMATION: NMFS manages the groundfish fishery in the BSAI according to the Fishery Management Plan for Groundfish of the Bering Sea and Aleutian Islands Management Area (FMP) prepared by the North Pacific Fishery Management Council under authority of the Magnuson–Stevens Fishery Conservation and Management Act. Regulations governing fishing by U.S. vessels in accordance with the FMP appear at subpart H of 50 CFR part 600 and 50 CFR part 679.

The 2008 Pacific cod TAC in the BSAI is 170,720 metric tons (mt) as established by the 2008 and 2009 final harvest specifications for groundfish in the BSAI (73 FR 10160, February 26, 2008). Pursuant to § 679.29(a)(7)(ii), the allocations of the Pacific cod TAC are 73,844 mt to catcher processor vessels using hook–and–line gear, 2,274 mt to catcher processor vessels using pot gear, 12,737 mt to catcher vessels greater than or equal to 60 feet (18.3 meters (m)) length overall (LOA) using pot gear, 3,506 mt to AFA trawl catcher processors, and 33,692 mt to catcher vessels using trawl gear. The allocation to vessels using jig gear is 260 mt and the allocation to catcher vessels less than 60 feet (18.3m) LOA using hook–and–line or pot gear is 5,210 mt after four reallocations (73 FR 11562, March 4, 2008; 73 FR 19748, April 11, 2008; 73 FR 49962, August 25, 2008; and 73 FR 52797, September 11, 2008).

As of December 1, 2008, the Administrator, Alaska Region, NMFS (Regional Administrator), has determined that catcher vessels using trawl gear will not be able to harvest 2,850 mt of Pacific cod allocated to those vessels under § 679.20(a)(7)(ii). The Regional Administrator has determined that the projected unharvested amount is unlikely to be harvested by any of the other catcher vessel sectors described in § 679.20(a)(7)(iii)(A). Furthermore, the Regional Administrator has also determined that other trawl sectors will be unable to utilize the full unharvested amount and that catcher vessels greater than or equal to 60 feet (18.3m) LOA using pot gear will not be able to harvest any additional amounts. Therefore, in accordance with § 679.20(a)(7)(iii)(B), NMFS apportions 1,200 mt of Pacific cod from catcher vessels using trawl gear to AFA trawl catcher processors, 1,607 mt of Pacific cod from catcher vessels using trawl gear to catcher processor vessels using hook–and–line gear, and 43 mt from catcher vessels using trawl gear to catcher processors using pot gear.

The Regional Administrator has also determined that catcher vessels greater than or equal to 60 feet (18.3 m) LOA using pot gear will not be able to harvest 1,315 mt of Pacific cod. Furthermore, the Regional Administrator has determined that catcher processor vessels using pot gear will be unable to utilize the full unharvested amount. Therefore, in accordance with § 679.20(a)(7)(iii)(C), NMFS is reallocating 772 mt of Pacific cod allocated to catcher vessels greater than 60 feet (18.3 m) LOA using pot gear to catcher processor vessels using pot gear and 543 mt of Pacific cod allocated to catcher vessels greater than or equal to 60 feet (18.3 m) LOA using pot gear to catcher processor vessels using hook–and–line gear.

The Regional Administrator has also determined that vessels using jig gear will be unable to harvest 80 mt of Pacific cod. The Regional Administrator has also determined that catcher vessels less than 60 feet (18.3m) LOA using hook–and–line or pot gear and catcher vessels greater than or equal to 60 feet (18.3 m) LOA using hook–and–line gear will be unable to harvest additional Pacific cod. Therefore, in accordance with § 679.20(a)(7)(iii)(A), NMFS is reallocating 80 mt of Pacific cod allocated to jig vessels to catcher processor vessels using hook–and–line gear.

The allocations for Pacific cod specified in the 2008 and 2009 final harvest specifications for groundfish in the BSAI (73 FR 10160, February 26, 2008) and four reallocations (73 FR 11562, March 4, 2008, 73 FR 19748, April 11, 2008, 73 FR 49962, August 25, 2008, and 73 FR 52797, September 11, 2008) are revised as follows: 180 mt to vessels using jig gear, 76,074 mt to catcher processor vessels using hook–and–line gear, 11,422 mt to catcher vessels using pot gear, 3,089 mt to catcher processor vessels using pot gear, 4,706 mt to AFA catcher processor vessels using trawl gear, and 30,842 mt to catcher vessels using trawl gear.

Classification

This action responds to the best available information recently obtained from the fishery. The Assistant Administrator for Fisheries, NOAA (AA), finds good cause to waive the requirement to provide prior notice and opportunity for public comment pursuant to the authority set forth at 5 U.S.C. 553(b)(B) as such requirement is impracticable and contrary to the public interest. This requirement is impracticable and contrary to the public interest as it would prevent NMFS from responding to the most recent fisheries data in a timely fashion and would delay the reallocation of Pacific cod. Since the fishery is currently open, it is important to immediately inform the industry as to the revised allocations. Immediate notification is necessary to allow for the orderly conduct and efficient operation of this fishery, to allow the industry to plan for the fishing season, and to avoid potential disruption to the fishing fleet as well as processors. NMFS was unable to publish a notice providing time for public comment because the most recent, relevant data only became available as of December 1, 2008.

The AA also finds good cause to waive the 30-day delay in the effective date of this action under 5 U.S.C. 553(d)(3). This finding is based upon the reasons provided above for waiver of prior notice and opportunity for public comment.

This action is required by § 679.20 and is exempt from review under Executive Order 12866.

Authority: 16 U.S.C. 1801 *et seq.*

Dated: December 5, 2008.

Emily H. Menashes,

Acting Director, Office of Sustainable Fisheries, National Marine Fisheries Service.

[FR Doc. E8–29201 Filed 12–5–08; 4:15 pm]

BILLING CODE 3510–22–S

Proposed Rules

Federal Register
Vol. 73, No. 238
Wednesday, December 10, 2008

This section of the FEDERAL REGISTER contains notices to the public of the proposed issuance of rules and regulations. The purpose of these notices is to give interested persons an opportunity to participate in the rule making prior to the adoption of the final rules.

FEDERAL RESERVE SYSTEM

12 CFR Part 226

[Regulation Z; Docket No. R–1340]

Truth in Lending

AGENCY: Board of Governors of the Federal Reserve System.

ACTION: Proposed rule; request for public comment.

SUMMARY: On July 30, 2008, the Board published a final rule amending Regulation Z, which implements the Truth in Lending Act (TILA) and the Home Ownership and Equity Protection Act (HOEPA). The July 2008 final rule requires creditors to give consumers transaction-specific cost disclosures shortly after application for closed-end loans secured by a consumer's principal dwelling. The disclosures must be provided before the consumer pays any fee, other than a fee for obtaining the consumer's credit history. Also on July 30, 2008, the Congress enacted the Housing and Economic Recovery Act of 2008, which included amendments to TILA, known as the Mortgage Disclosure Improvement Act of 2008 (MDIA). On October 3, 2008, the Congress amended the MDIA in connection with its enactment of the Emergency Economic Stabilization Act of 2008 (''Stabilization Act''). The Board is now proposing revisions to Regulation Z to implement the provisions of the MDIA, as amended.

The MDIA broadens and adds to the requirements of the Board's July 2008 final rule. Among other things, the MDIA requires early, transaction-specific disclosures for mortgage loans secured by dwellings other than the consumer's principal dwelling and requires waiting periods between the time when disclosures are given and consummation of the transaction. Moreover, these requirements of the MDIA will become effective on July 30, 2009, about two months earlier than the Board's regulatory amendments adopted in the July 2008 final rule.

Consistent with the MDIA, the proposed amendments to Regulation Z would require creditors to deliver good faith estimates of the required mortgage disclosures or place them in the mail no later than three business days after receiving a consumer's application for a dwelling-secured closed-end loan. The delivery or mailing of these disclosures would have to occur at least seven business days before consummation. If the annual percentage rate provided in the good faith estimates changes beyond a stated tolerance, creditors must provide corrected disclosures, which the consumer must receive at least three business days before consummation of the transaction. The proposal would allow consumers to expedite consummation to meet a *bona fide* personal financial emergency. The MDIA, as amended by the Stabilization Act, specifies different requirements for providing early disclosures for mortgage transactions secured by a consumer's interest in a timeshare plan.

DATES: Comments must be received on or before January 23, 2009.

ADDRESSES: You may submit comments on the proposed amendments to regulation Z, identified by Docket No. R–1340, by any of the following methods:

- *Agency Web Site: http://www.federalreserve.gov*. Follow the instructions for submitting comments at *http://www.federalreserve.gov/generalinfo/foia/ProposedRegs.cfm*.
- *Federal eRulemaking Portal: http://www.regulations.gov*. Follow the instructions for submitting comments.
- *E-mail: regs.comments@federalreserve.gov*. Include the docket number in the subject line of the message.
- *Fax:* (202) 452–3819 or (202) 452–3102.
- *Mail:* Address to Jennifer J. Johnson, Secretary, Board of Governors of the Federal Reserve System, 20th Street and Constitution Avenue, NW., Washington, DC 20551.

All public comments will be made available on the Board's web site at *http://www.federalreserve.gov/generalinfo/foia/ProposedRegs.cfm* as submitted, unless modified for technical reasons. Accordingly, comments will not be edited to remove any identifying or contact information. Public comments may also be viewed electronically or in paper in Room MP–500 of the Board's Martin Building (20th and C Streets, NW) between 9 a.m. and 5 p.m. on weekdays.

FOR FURTHER INFORMATION CONTACT: Jamie Z. Goodson or Nikita M. Pastor, Attorneys; Division of Consumer and Community Affairs, Board of Governors of the Federal Reserve System, Washington, DC 20551, at (202) 452–2412 or (202) 452–3667. For users of Telecommunications Device for the Deaf (TDD) only, contact (202) 263–4869.

SUPPLEMENTARY INFORMATION:

I. Background

One of the purposes of the Truth in Lending Act (TILA), 15 U.S.C. 1601 *et seq.*, is to promote the informed use of consumer credit by requiring disclosures about its terms and cost. The act requires creditors to disclose the cost of credit as a dollar amount (the finance charge) and as an annual percentage rate (APR). Uniformity in creditors' disclosures is intended to assist consumers in comparison shopping. TILA requires additional disclosures for loans secured by consumers' homes and permits consumers to rescind certain transactions that involve their principal dwelling.

TILA mandates that the Board prescribe regulations to carry out the purposes of the act. 15 U.S.C. 1604(a). TILA is implemented by the Board's Regulation Z. 12 CFR part 226. An Official Staff Commentary interprets the requirements of the regulation and provides guidance to creditors in applying the rules to specific transactions. 12 CFR part 226 (Supp. I).

TILA Section 128, 15 U.S.C. 1638, requires creditors to make specified disclosures in connection with closed-end consumer credit transactions before the credit is extended. Before enactment of the MDIA, in connection with certain mortgage loans, creditors were required to make good faith estimates of such disclosures (''early disclosures'') before the credit is extended or within three business days after the consumer has submitted an application, whichever is earlier. 15 U.S.C. 1638(b)(2). In implementing TILA Section 128, Regulation Z requires creditors to give these early disclosures only for loans that finance the purchase or initial construction of a consumer's principal dwelling. On July 30, 2008, the Board published a final rule amending Regulation Z (the July 2008 final rule)

(73 FR 44522). The July 2008 final rule requires, among other things, that a creditor provide these early disclosures even when the loan is not for the purpose of financing the purchase or initial construction of the principal dwelling. Under the July 2008 final rule, the early disclosures also must be provided for non-purchase closed-end loans secured by the consumer's principal dwelling (such as a refinance loan). The July 2008 final rule also required these disclosures to be given before the consumer pays any fee, other than a *bona fide* and reasonable fee for reviewing credit history. As published, these provisions of the July 2008 final rule are scheduled to become effective on October 1, 2009 (73 FR at 55494).

On the same day that the July 2008 final rule was published, Congress amended TILA by enacting the Mortgage Disclosure Improvement Act of 2008 (MDIA).[1] The MDIA amends TILA and codifies some of the early disclosure requirements of the July 2008 final rule, but also expands upon the regulatory provisions.

Like the July 2008 final rule, the MDIA requires creditors to make the early disclosures even when the loan is not for the purpose of financing the purchase or initial construction of the consumer's principal dwelling and prohibits the collection of fees before the consumer receives the disclosures, other than a fee for obtaining a consumer's credit history. However, the MDIA applies these provisions to loans secured by a dwelling even when it is not the consumer's principal dwelling. Moreover, the MDIA imposes additional requirements not contained in the July 2008 final rule. Under the MDIA, for loans secured by a consumer's dwelling, creditors must deliver or mail the early disclosures at least seven business days before consummation. If the APR contained in the early disclosures becomes inaccurate (for example, due to a change in the loan terms), creditors must ''redisclose'' and provide corrected disclosures that the consumer must receive at least three business days before consummation. The disclosures also must inform consumers that they are not obligated to complete the transaction simply because disclosures were provided or because the consumer has applied for the loan. The MDIA imposes different requirements for early disclosure in closed-end mortgage transactions that are secured by a consumer's interest in a timeshare plan.[2] These provisions of the MDIA will become effective on July 30, 2009, which is about two months earlier than the effective date of the July 2008 final rule.

At this time, the Board is proposing only to conform Regulation Z, as amended on July 30, 2008, to the MDIA provisions that become effective on July 30, 2009. The MDIA also contains additional disclosure requirements for variable-rate transactions that are not addressed in this proposed rulemaking. Those provisions of the MDIA will not become effective until January 30, 2011, or any earlier compliance date ultimately established by the Board. This proposal does not address those disclosures. The Board anticipates issuing proposed amendments to Regulation Z to implement those provisions of the MDIA during 2009, in connection with the Board's comprehensive review of closed-end mortgage disclosures that is currently underway.

As discussed above, the MDIA contains several provisions that mirror the July 2008 final rule. These provisions are not discussed below because they are explained in detail in the supplementary information portion of the July 2008 final rule. (*See* 73 FR 44522; July 30, 2008). Final rules adopting this proposal would become effective July 30, 2009, pursuant to MDIA. In addition, to conform with the MDIA, certain regulatory changes that the Board adopted in July 2008 will also become effective on July 30, 2009 (and not on October 1, 2009 as originally provided in the July 2008 final rule). These regulatory changes are: The requirement that early disclosures be given for dwelling-secured mortgage transactions rather than only for ''residential mortgage transactions'' to finance the purchase of initial construction of the dwelling (in §§ 226.17(f) and 226.19(a)(1)(i) and associated commentary) and that early disclosures be given before consumers pay any fee except a fee for obtaining the consumer's credit history (in § 226.19(a)(1)(ii) and (iii) and associated commentary).

Minor conforming and technical amendments to Regulation Z are also being proposed.

II. Section-by-Section Analysis of Proposed Regulatory Provisions

A. Coverage of § 226.19

TILA Section 128(a) requires creditors to disclose certain information for closed-end consumer credit transactions, including, for example, the amount financed and the APR. TILA Section 128(b)(2) requires creditors to make good faith estimates of these disclosures within three business days of receiving the consumer's application, or before consummation if that occurs earlier. Until the recent enactment of the MDIA, TILA Section 128(b)(2) applied only to a ''residential mortgage transaction'' subject to the Real Estate Settlement Procedures Act (RESPA). *See* 15 U.S.C. 1602(w). A residential mortgage transaction is defined in TILA as a loan to finance the purchase or initial construction of a consumer's dwelling. Regulation Z limits the definition to transactions secured by the consumer's principal dwelling. *See* § 226.2(a)(24).

The MDIA extends the early disclosure requirement in TILA Section 128(b)(2) to additional types of loans. Under the MDIA, early disclosures are required for ''any extension of credit secured by the dwelling of a consumer.'' Thus, as amended, the statute requires early disclosures for home refinance loans and home equity loans. This is consistent with revisions made by the Board's July 2008 final rule. This proposal would, however, amend Regulation Z to also apply the early disclosure requirements to loans secured by dwellings other than the consumer's principal dwelling. Accordingly, proposed § 226.19(a)(1)(i) would require creditors to give consumers early disclosures in connection with dwelling-secured credit (if also subject to RESPA), whether or not the loan is for the purpose of financing the purchase or initial construction of the consumer's principal dwelling. As is currently the case, § 226.19(a)(1)(i) as proposed to be revised would not apply to home equity lines of credit (HELOCs), which are subject to the rules for open-end credit in § 226.5b; the July 2008 final rule also did not apply to HELOCs. As discussed in detail in part II.G of the **SUPPLEMENTARY INFORMATION**, however, the Board is requesting comment on the timing of HELOC disclosures, in connection with the review of content and format requirements for HELOC disclosures by Board staff that currently is under way.

TILA Section 128(b)(2) (as amended by the MDIA) applies to dwelling-secured mortgage transactions if they also are subject to RESPA. The U.S. Department of Housing and Urban Development's (HUD) Regulation X implements RESPA. *See* 12 U.S.C. 2601 *et seq.*; 24 CFR 3500.1 *et seq.* In March 2008, HUD published a proposal to

[1] The MDIA is contained in Sections 2501 through 2503 of the Housing and Economic Recovery Act of 2008 (HERA), Pub. L. 110–289, enacted on July 30, 2008. The MDIA was amended by the Emergency Economic Stabilization Act of 2008, Pub. L. 110–343, enacted on October 3, 2008.

[2] The MDIA also increases the dollar amounts of civil liability for TILA violations.

amend Regulation X. (*See* 73 FR 14030; Mar. 14, 2008). In November 2008, HUD published final rules amending Regulation X. (*See* 73 FR 68204; Nov. 17, 2008). The Board believes that these proposed amendments to Regulation Z's timing requirements for early disclosures remain consistent with timing requirements for good faith estimates of settlement costs under Regulation X, as amended. Consistency between Regulation Z and Regulation X are discussed below in part IV of the Supplementary Information. The Board requests comment about ways to further conform Regulation Z's disclosure timing requirements for dwelling-secured credit to the disclosure timing requirements in HUD's Regulation X, as amended.

B. Timing of Delivery of Early Disclosures—§ 226.19(a)(1)(i)

Currently under Regulation Z, creditors must provide the early disclosures within three business days after receiving the consumer's written application or before consummation, whichever is earlier. The MDIA amends TILA to require creditors to deliver or mail the early disclosures no later than three business days after receiving the consumer's application and at least seven business days before consummation. The Board is proposing to further amend § 226.19(a)(1)(i), as published in the July 2008 final rule, to reflect this change. Proposed comment 19(a)(1)(i)–6 would be added to clarify that consummation could occur any time on the seventh business day following delivery or mailing; the proposed comment provides examples to facilitate compliance.

The MDIA provides that consumers must receive the early disclosures before paying any fee in connection with the mortgage application (other than for obtaining the consumer's credit history) and further provides that if the disclosures are mailed, the consumer is considered to have received them three business days after they are mailed. This provision of the MDIA merely codifies § 226.19(a)(1)(ii) and (iii) of Regulation Z, as adopted in the Board's July 2008 final rule. Accordingly, no further revisions to § 226.19(a)(1)(ii) or (iii) are being proposed at this time.

Revisions would also be made to comment 19(a)(1)(i)–3 to conform a reference to HUD's Regulation X to the current language in that regulation.

C. Redisclosure Requirements—§ 226.19(a)(2)

Currently, when a creditor provides early TILA disclosures and the APR subsequently changes beyond the specified tolerance, the creditor must redisclose the APR and other changed terms no later than consummation or settlement. The MDIA amends TILA Section 128(b)(2) to require that creditors make corrected disclosures that consumers must receive at least three business days before consummation in such circumstances. The MDIA removes the reference to ''settlement'' for purposes of this requirement. (For mortgage transactions secured by a consumer's interest in a timeshare plan, however, the MDIA requires creditors to disclose changed terms at the time of consummation or settlement, as discussed below.) The Board is proposing to amend § 226.19(a)(2) to reflect this change. Under the proposal, consummation can occur anytime on the third business day after the consumer receives the corrected disclosure.

The MDIA also provides that if the corrected disclosures are mailed, the consumer is considered to receive the disclosures three business days after mailing. This is consistent with the presumption the Board adopted in the July 2008 final rule in § 226.19(a)(1)(ii), which applies when the early disclosures are mailed; those disclosures must be received by the consumer before fees are collected (other than a credit report fee). The Board is proposing to revise comment 19(a)(2)–1 to provide examples illustrating the effect of the three-business-day waiting period and when consummation may occur.

Comment 19(a)(2)–3 would be revised to clarify that the three-business-day waiting period before consummation begins when the disclosures are received by the consumer and not when they are mailed. This is consistent with the rules for certain high-cost loans and reverse mortgage transactions, which also require a creditor to make disclosures at least three business days before consummation. *See* § 226.31(c) and comment 31(c)–1.

D. Definition of ''Business Day''—§ 226.2(a)(6)

The MDIA provides that if the early disclosures are mailed to the consumer, the consumer is considered to have received them three business days after they are mailed. This presumption is important to two provisions in the MDIA: (1) The prohibition on collecting fees before the consumer receives the early disclosures; and (2) the requirement, if the APR in the early disclosures becomes inaccurate, that creditors make corrected disclosures, which consumers must receive at least three business days before consummation.

In the July 2008 final rule, the Board revised the definition of ''business day'' to clarify how creditors should count weekends and federal legal public holidays in determining when mailed disclosures are presumed to be received and how long the restriction on fees applies under § 226.19(a)(1)(ii). *See* 73 FR 44599. The Board is proposing to further revise the definition of ''business day'' to clarify that creditors should count ''business days'' the same way for purposes of the presumption in proposed § 226.19(a)(2) that consumers receive corrected disclosures three business days after they are mailed.

Currently, § 226.2(a)(6) contains two definitions of ''business day.'' Under the general definition, a ''business day'' is a day on which the creditor's offices are open to the public for carrying on substantially all of its business functions. However, for some purposes a more precise definition applies; ''business day'' means all calendar days except Sundays and specified federal legal public holidays, for purposes of §§ 226.15(e), 226.23(a), and 226.31(c)(1) and (2). The July 2008 final rule adopted the more precise definition for use in determining when mailed disclosures are presumed to be received under § 226.19(a)(1)(ii), and this definition would also apply for purposes of proposed § 226.19(a)(2).

Under the MDIA, creditors must deliver the early disclosures, or place them in the mail, no later than three business days after receiving a consumer's application for dwelling-secured credit; the delivery or mailing also must occur at least seven business days before consummation. Under the Board's proposal, the general definition of business day would be used for purposes of satisfying these timing requirements, which are contained in proposed § 226.19(a)(1)(i). This would ensure consistency with RESPA's requirement that creditors provide good faith estimates of settlement costs not later than three business days after the creditor receives the consumer's application for a federally related mortgage loan. *See* 24 CFR 3500.2(b) and 3500.7. In order to simplify the rule, the general definition of business day would also be used for determining when the 7-day waiting period has expired and consummation may occur. The Board requests comment, however, on whether the more precise definition of business day should be used to facilitate compliance with the seven business day waiting period requirement.

E. Consumer's Waiver of Waiting Period Before Consummation—§ 226.19(a)(3)

Under the MDIA, to expedite consummation of a mortgage transaction, a consumer may modify or waive the timing requirements for the early disclosures when the consumer determines that the credit extension is needed to meet a *bona fide* personal financial emergency. However, the consumer must receive the disclosures required by § 226.18 at or before the time of the consumer's modification or waiver.

To implement this provision, proposed § 226.19(a)(3) would permit the consumer to shorten or waive the seven-business-day period required by § 226.19(a)(1)(i) or the three-business-day waiting period required by § 226.19(a)(2). As required by the MDIA, a consumer may shorten or waive the pre-consummation waiting period only if the consumer has received accurate TILA disclosures reflecting the final costs and terms. Accordingly, if the consumer waives the seven-business-day waiting period based on the early disclosures, and a change occurs that makes the APR inaccurate (as determined under § 226.22), the consumer must receive corrected disclosures before consummation. In that circumstance, the three-business-day waiting period in § 226.19(a)(2) would apply unless the consumer provides a waiver after receiving the corrected disclosures. Proposed comment 19(a)(3)–2 provides examples that illustrate whether a consumer who receives corrected disclosures does or does not need to provide a new modification or waiver statement.

Under proposed § 226.19(a)(3), the consumer must give the creditor a dated written statement describing the emergency and specifically modifying or waiving the waiting period(s). All consumers entitled to receive the disclosures would have to sign the statement. Proposed § 226.19(a)(3) would prohibit the use of printed forms. The proposed provisions concerning the modification or waiver of the waiting periods are substantially similar to the provisions for waiving the right to rescind and waiving the three-business-day waiting period before consummating certain high-cost mortgage loans. *See* §§ 226.15(e), 226.23(e), and 226.31(c)(1)(iii). The Board solicits comment on the proposed modification or waiver procedures, especially whether such procedures should be more or less flexible than existing procedures for modifying or waiving the rescission right or the waiting period before high-cost consummating mortgage transactions covered by § 226.32(a). In particular, the Board asks commenters to discuss any specific procedural or other adjustments the Board should make to implement the MDIA provisions that permit such modification or waiver.

Proposed comment 19(a)(3)–1 clarifies that a consumer may modify or waive the required waiting period(s) only if the consumer has a *bona fide* personal financial emergency that must be met before the end of the waiting period(s). This comment is consistent with commentary on waiving the rescission period and the pre-consummation waiting period required for certain high-cost mortgage transactions. *See* comments 15(e)–1, 23(e)–1, and 31(c)(1)(iii)–1. The proposed comment explains that whether a *bona fide* personal financial emergency exists would be determined by the facts surrounding individual circumstances. The imminent sale of the consumer's home at foreclosure during the three-business-day waiting period is provided as an example. This example is the same as the example in existing staff commentary on modifying or waiving the waiting period required with certain high-cost mortgage loans. *See* comment 31(c)(1)(iii)–1.

The Board solicits comment on whether under proposed § 226.19(a)(3) modification or waiver should be permitted only if the consumer's *bona fide* personal financial emergency must be met before the end of the required waiting period. The Board also requests comment on whether there are circumstances, other than pending foreclosure, where the consumer may want to consummate the transaction before the end of: (1) The seven-business-day waiting period after early disclosures are made; (2) the three-business-day waiting period, if the creditor is required to make corrected disclosures; or (3) either period.

F. Notice—§ 226.19(a)(4)

The MDIA requires that the early disclosures contain a clear and conspicuous notice containing the following statement: ''You are not required to complete this agreement merely because you have received these disclosures or signed a loan application.'' Under proposed § 226.19(a)(4), creditors would have to include that statement in the early disclosures, as well as in any corrected disclosures required by § 226.19(a)(2). The Board expects that requiring the notice in corrected disclosures would impose minimal, if any, burden on creditors. The Board requests comment on proposed § 226.19(a)(4), including any benefits to consumers or burdens to creditors that may result from the proposed requirement. The Board also solicits comment on whether the statement should be provided in substantially similar form using terms that are easier for consumers to understand.

G. Timeshare Plans—§ 226.19(a)(5)

Proposed § 226.19(a)(5) sets forth the requirements for extensions of credit secured by a consumer's interest in a ''timeshare plan'' (timeshare transactions), as defined in the bankruptcy laws (*see* 11 U.S.C. § 101(53D)). Pursuant to amendments made to the MDIA in the Stabilization Act, the disclosure requirements and the fee restriction added by the MDIA are not applicable to these transactions, which instead are subject to the same early disclosure requirements that applied to ''residential mortgage transactions'' under TILA Section 128(b)(2) before the MDIA was enacted. Accordingly, for timeshare transactions creditors must make good faith estimates of the disclosures required by § 226.18 before credit is extended, or must deliver or place the early disclosures in the mail within three business days (days the creditor's offices are open to the public for substantially all business functions) after the creditor receives the consumer's application, whichever is earlier. The seven-business-day waiting period and three-business-day waiting period before consummation, contained in proposed §§ 226.19(a)(1)(i) and 226.19(a)(2) respectively, do not apply to timeshare transactions.

If the APR stated in the early disclosures changes beyond the specified tolerance, proposed § 226.19(a)(5)(iii) requires creditors to disclose all the changed terms no later than consummation or settlement of the transaction. This is consistent with the existing rules for residential mortgage transactions in § 226.19(a)(2). The discussion in proposed comment 19(a)(5)(iii)–1 of disclosing changed terms no later than ''consummation'' or ''settlement'' for timeshare transactions is based on current comments 19(a)(2)–3 and 19(a)(2)–4. Currently, comment 19(a)(2)–3 states that ''consummation'' is defined in § 226.2(a), whereas ''date of settlement'' is defined in HUD's Regulation X (24 CFR 3500.2(a)). Comment 19(a)(2)–4 currently explains that when a creditor delays redisclosure until settlement, which may be at a time later than consummation, disclosures may be based on the terms in effect at settlement, rather than the terms in effect at settlement. As discussed above,

for transactions other than timeshare transactions, the MDIA amends TILA to remove reference to ''settlement'' from TILA's provisions requiring creditors to make corrected disclosures. Under the MDIA, consumers must receive any corrected disclosures at least three business days before consummation.

The Board solicits comment on the costs and benefits of basing the timing requirements for corrected disclosures solely on the time of consummation, for purposes of non-timeshare transactions, but on the time of consummation or settlement, for purposes of timeshare transactions. If Regulation Z's timing requirements for corrected disclosures should be consistent for timeshare transactions and non-timeshare transactions, should Regulation Z require creditors to make corrected disclosures at the time of consummation (rather than the time of consummation or settlement), for purposes of timeshare transactions? Or should Regulation Z require creditors to make corrected disclosures three business days before the later of consummation or settlement, for purposes of covered transactions other than timeshare transactions?

H. Solicitation of Comments on Timing of Disclosures for Home Equity Lines of Credit

The MDIA applies only to closed-end loans secured by a consumer's dwelling and does not affect the disclosure requirements for open-end credit plans secured by a dwelling (home equity lines of credit, or HELOCs). In connection with the Board's comprehensive review of mortgage transactions, the Board's staff is currently reviewing the content and format of HELOC disclosures and subjecting them to consumer testing. A proposal to improve the disclosures is anticipated next year. To aid in this review, the Board seeks comment on whether it is necessary or appropriate to change the timing of HELOC disclosures and, if so, what changes should be made.

Under current rules, consumers typically receive non-transaction specific disclosures describing the creditor's HELOC plan at the time they receive an application. *See* 12 CFR 226.5b. Creditors must provide more detailed disclosures at account opening, before the first transaction. *See* 12 CFR 226.6. The Board seeks comment on whether transaction-specific disclosures (such as the APR, an itemization of fees, and potential payment amounts) should be required after application but significantly earlier than account opening, at least in some circumstances. For example, many consumers take a major draw on the account as soon as they open it. These consumers may use the funds to finance a home purchase (usually, but not necessarily, with a simultaneous closed-end loan) or an immediate expense (such as a college tuition bill). Would a requirement to disclose final HELOC terms, including the APR and fees, three days before account opening substantially benefit consumers who plan to draw immediately? Comment is also solicited on the potential costs and whether they would outweigh potential benefits.

III. Paperwork Reduction Act

In accordance with the Paperwork Reduction Act (PRA) of 1995 (44 U.S.C. 3506; 5 CFR Part 1320 Appendix A.1), the Board reviewed the proposed rule under the authority delegated to the Board by the Office of Management and Budget (OMB). The collection of information that is required by this proposed rule is found in 12 CFR part 226. The Federal Reserve may not conduct or sponsor, and an organization is not required to respond to, this information collection unless the information collection displays a currently valid OMB control number. The OMB control number is 7100–0199.

This information collection is required to provide benefits for consumers and is mandatory (15 U.S.C. 1601 *et seq.*). Since the Federal Reserve does not collect any information, no issue of confidentiality arises. The respondents/recordkeepers are creditors and other entities subject to Regulation Z, including for-profit financial institutions and small businesses.

TILA and Regulation Z are intended to ensure effective disclosure of the costs and terms of credit to consumers. For open-end credit, creditors are required to, among other things, disclose information about the initial costs and terms and to provide periodic statements of account activity, notice of changes in terms, and statements of rights concerning billing error procedures. Regulation Z requires specific types of disclosures for credit and charge card accounts and home equity plans. For closed-end loans, such as mortgage and installment loans, cost disclosures are required to be provided prior to consummation. Special disclosures are required in connection with certain products, such as reverse mortgages, certain variable-rate loans, and certain mortgages with rates and fees above specified thresholds. TILA and Regulation Z also contain rules concerning credit advertising. Creditors are required to retain evidence of compliance for twenty-four months (§ 226.25), but Regulation Z does not specify the types of records that must be retained.

Under the PRA, the Federal Reserve accounts for the paperwork burden associated with Regulation Z for the state member banks and other creditors supervised by the Federal Reserve that engage in lending covered by Regulation Z and, therefore, are respondents under the PRA. Appendix I of Regulation Z defines the Federal Reserve-regulated institutions as: State member banks, branches and agencies of foreign banks (other than federal branches, federal agencies, and insured state branches of foreign banks), commercial lending companies owned or controlled by foreign banks, and organizations operating under section 25 or 25A of the Federal Reserve Act. Other federal agencies account for the paperwork burden imposed on the entities for which they have administrative enforcement authority. The current total annual burden to comply with the provisions of Regulation Z is estimated to be 578,847 hours for the 1,138 Federal Reserve-regulated institutions that are deemed to be respondents for the purposes of the PRA. To ease the burden and cost of complying with Regulation Z (particularly for small entities), the Federal Reserve provides model forms, which are appended to the regulation.

The proposed rule would impose a one-time increase in the total annual burden under Regulation Z for all respondents regulated by the Federal Reserve by 9,104 hours, from 578,847 to 587,951 hours.

The total estimated burden increase, as well as the estimates of the burden increase associated with each major section of the proposed rule as set forth below, represents averages for all respondents regulated by the Federal Reserve. The Federal Reserve expects that the amount of time required to implement each of the proposed changes for a given institution may vary based on the size and complexity of the respondent. Furthermore, the burden estimate for this rulemaking does not include the burden addressing changes to format, timing, and content requirements for the credit disclosures governed by Regulation Z as announced in a separate proposed rulemaking (Docket No. R–1286).

The Federal Reserve estimates that 1,138 respondents regulated by the Federal Reserve would take, on average, 8 hours (one business day) to update their systems to comply with the proposed disclosure requirements in §§ 226.17 and 226.19. This one-time revision would increase the burden by 9,104 hours.

The other federal agencies are responsible for estimating and reporting to OMB the total paperwork burden for the institutions for which they have administrative enforcement authority. They may, but are not required to, use the Federal Reserve's burden estimation methodology. Using the Federal Reserve's method, the total current estimated annual burden for all financial institutions subject to Regulation Z, including Federal Reserve-supervised institutions, would be approximately 11,671,017 hours. The proposed rule would increase the estimated annual burden for all institutions subject to Regulation Z by 137,600 hours to 11,808,617 hours. The above estimates represent an average across all respondents and reflect variations between institutions based on their size, complexity, and practices. All covered institutions, of which there are approximately 17,200, are potentially affected by this collection of information, and thus are respondents for purposes of the PRA.

Comments are invited on: (1) Whether the proposed collection of information is necessary for the proper performance of the Federal Reserve's functions; including whether the information has practical utility; (2) the accuracy of the Federal Reserve's estimate of the burden of the proposed information collection, including the cost of compliance; (3) ways to enhance the quality, utility, and clarity of the information to be collected; and (4) ways to minimize the burden of information collection on respondents, including through the use of automated collection techniques or other forms of information technology. Comments on the collection of information should be sent to Michelle Shore, Federal Reserve Board Clearance Officer, Division of Research and Statistics, Mail Stop 151–A, Board of Governors of the Federal Reserve System, Washington, DC 20551, with copies of such comments sent to the Office of Management and Budget, Paperwork Reduction Project (7100–0199), Washington, DC 20503.

IV. Initial Regulatory Flexibility Analysis

The Regulatory Flexibility Act (RFA), 5 U.S.C. 601–612, generally requires an agency to perform an assessment of the impact a rule is expected to have on small entities.[3] However, under Section 605(b) of the RFA, 5 U.S.C. 605(b), the regulatory flexibility analysis otherwise required under section 604 of the RFA is not required if an agency certifies, along with a statement providing the factual basis for such certification, that the rule will not have a significant economic impact on a substantial number of small entities. The Board believes that this proposed rule will not have a significant economic impact on a substantial number of small entities. The proposed amendments to Regulation Z are narrowly designed to implement the revisions to the Truth in Lending Act (TILA) made by the MDIA. Creditors must comply with the MDIA's requirements when they become effective on July 30, 2009, whether or not the Board amends Regulation Z as proposed. The Board's proposal is intended to facilitate compliance by eliminating inconsistencies between Regulation Z's existing requirements and the statutory requirements imposed by the MDIA starting July 30, 2009. A final regulatory flexibility analysis will be conducted after consideration of comments received during the public comment period. The Board requests public comment in the areas discussed below.

A. Reasons for the Proposed Rule

Congress enacted the TILA based on findings that economic stability would be enhanced and competition among consumer credit providers would be strengthened by the informed use of credit resulting from consumers' awareness of the cost of credit. One of the stated purposes of TILA is to provide a meaningful disclosure of credit terms to enable consumers to compare credit terms available in the marketplace more readily and avoid the uninformed use of credit. TILA also contains procedural and substantive protections for consumers. TILA directs the Board to prescribe regulations to carry out the purposes of the statute. The Board's Regulation Z implements TILA.

Congress enacted the Mortgage Disclosure Improvement Act of 2008 (MDIA) in 2008 as an amendment to TILA. The MDIA amends TILA's special disclosure requirements for closed-end mortgage transactions that are secured by a consumer's dwelling and subject to the Real Estate Settlement Procedures Act (RESPA). In July 2008, the Board revised Regulation Z to expand the number of transactions in which creditors must give a good faith estimate of the required disclosures (''early disclosures''). Previously, early disclosures were required only for loans made to finance the purchase or initial construction of a consumer's principal dwelling. Under the July 2008 final rule, creditors must provide early disclosures for any transaction secured by the consumer's principal dwelling, such as a home refinance loan or home equity loan. The MDIA amends TILA to require early disclosures for consumer loans secured by any dwelling, even if it is not the consumer's principal dwelling. As explained in parts I and II of the **SUPPLEMENTARY INFORMATION**, the proposal would require creditors to delay consummating a loan for seven business days after the creditor makes early disclosures, and three business days after the consumer receives any required corrected disclosures.

B. Statement of Objectives and Legal Basis

Parts I and II of the **SUPPLEMENTARY INFORMATION** contain a detailed discussion of the objectives and legal basis for this proposed rulemaking. In summary, the proposed amendments to Regulation Z are designed to implement changes that the MDIA makes to TILA. The legal basis for the proposed rule is in Section 105(a) of TILA.

C. Description of Small Entities to Which the Proposed Rule Would Apply

The proposed regulations would apply to all institutions and entities that engage in closed-end dwelling-secured lending for consumer purposes that is subject to RESPA. TILA and Regulation Z have broad applicability to individuals and businesses that originate even small numbers of home-secured loans. *See* § 226.1(c)(1). The Board is not aware of a reliable source for the total number or asset sizes of small entities likely to be affected by the proposal. However, through data from Reports of Condition and Income (''Call Reports'') of depository institutions and certain subsidiaries of banks and bank companies, as well as data reported under the Home Mortgage Disclosure Act (HMDA),[4] the Board can estimate

[3] Under standards the U.S. Small Business Administration sets (SBA), an entity is considered ''small'' if it has $175 million or less in assets for banks and other depository institutions; and $6.5 million or less in revenues for non-bank mortgage lenders, mortgage brokers, and loan servicers. U.S. Small Business Administration, Table of Small Business Size Standards Matched to North American Industry Classification System Codes, *available at http://www.sba.gov/idc/groups/public/documents/sba_homepage/serv_sstd_tablepdf.pdf.*

[4] HMDA requires lenders to report information annually to their federal supervisory agencies for each application and loan acted on during the calendar year. *See* 12 U.S.C. 2801 *et seq.* The loans reported are estimated to represent about 80 percent of all home lending nationwide and therefore are likely to be broadly representative of home lending in the United States. Robert B. Avery, and Kenneth P. Brevoort, and Glenn B. Canner, *The 2007 HMDA Data*, 84 Federal Reserve Bulletin (forthcoming 2008) (*2007 HMDA Data*) at 2, *http://www.federalreserve.gov/pubs/bulletin/2008/pdf/hmda07draft.pdf.*

the approximate number of small depository institutions that would be subject to the proposed rules. For the majority of HMDA respondents that are not depository institutions, exact asset size information is not available, although the Board has somewhat reliable estimates based on self-reporting from approximately five percent of the non-depository respondents.

Based on the best information available, the Board makes the following estimate of small entities that would be affected by this proposed rule: According to June 2008 Call Report data, approximately 9,670 small depository institutions would be subject to the proposed rule. Approximately 16,966 depository institutions in the United States filed Call Report data, approximately 12,392 of which had total domestic assets of $175 million or less and thus were considered small entities for purposes of the RFA. Of 4,387 banks, 588 thrifts and 7,278 credit unions that filed Call Report data and were considered small entities, 4,236 banks, 553 thrifts, and 4,881 credit unions, totaling 9,670 institutions, extended mortgage credit. For purposes of this Call Report analysis, thrifts include savings banks, savings and loan entities, co-operative banks and industrial banks. Further, HMDA data reported in 2008 (for 2007 lending activities) indicate that 1,752 non-depository institutions (independent mortgage companies, subsidiaries of a depository institution, or affiliates of a bank holding company) filed HMDA reports in 2008 for 2007 lending activities.[5] Based on the small volume of lending activity reported by these institutions, most are likely to be small entities. In connection with its proposed amendments to Regulation Z to implement the MDIA, the Board invites comment and information on the number and type of small entities that originate loans secured by a consumer's dwelling and subject to RESPA.

D. Projected Reporting, Recordkeeping, and Other Compliance Requirements

The compliance requirements of the proposed rules are described in parts I and II of the **SUPPLEMENTARY INFORMATION**. The effect of the proposed revisions to Regulation Z on small entities is unknown. To comply with the revised rules, many small entities would be required to modify their procedures for making credit disclosures for dwelling-secured mortgage transactions. The precise costs to small entities of updating their systems and disclosures are difficult to predict. These costs will depend on a number of unknown factors, including, among other things, the specifications of the current systems used by such entities to prepare and provide disclosures. The Board believes that these costs will not have a significant economic effect on small entities. The Board seeks information and comment on any costs, compliance requirements, or changes in operating procedures arising from the application of the proposed rule to small institutions.

E. Identification of Duplicative, Overlapping, or Conflicting Federal Rules

The Board has not identified any federal rules that conflict with the proposed revisions to Regulation Z. As discussed in part II of the **SUPPLEMENTARY INFORMATION**, TILA and the Board's proposed revisions to Regulation Z overlap with RESPA and HUD's Regulation X, which implements RESPA. TILA's purpose is to inform consumers about loan terms, and RESPA's is to inform consumers about settlement costs. These laws overlap with one another because settlement costs may include loan origination fees, and consumers may finance their settlement costs. Moreover, the Board's proposed revisions overlap with Regulation X, as revised by HUD in November 2008, in at least three ways. First, the proposed revisions apply to an extension of credit that is both secured by a consumer's dwelling and subject to RESPA. Second, the proposed revisions continue to cross-reference the definition of ''application'' under Regulation X. Third, the time period following application, within which creditors would have to make early disclosures under the Board's proposed rule, is the same as the time period within which creditors must make good faith estimates of settlement costs under RESPA—within three business days following application. Moreover, the proposed early disclosure requirements use a definition of ''business day'' that is consistent with the ''business day'' definition under Regulation X.

The MDIA amends TILA to base timing requirements for corrected disclosures on the date of ''consummation''—rather than on the later of ''consummation'' and ''settlement''—for purposes of timing rules for most, but not all, mortgage transactions secured by a consumer's dwelling. Therefore, for most dwelling-secured mortgage transactions, the Board's proposed revisions to Regulation Z would remove references to ''settlement,'' a term defined in Regulation X. These revisions to Regulation Z and associated commentary thus would reduce overlap with Regulation X. However, the MDIA's timing requirements for corrected disclosures for transactions secured by a consumer's interest in a timeshare plan refer both to ''consummation'' and ''settlement.'' The Board is requesting comment the costs and benefits of basing the timing requirements for corrected disclosures solely on the time of consummation, for purposes of non-timeshare transactions, but on the time of consummation or settlement, for purposes of timeshare transactions.

F. Identification of Duplicative, Overlapping, or Conflicting State Laws

Certain sections of the proposed rules may result in inconsistency with certain state laws. The closed-end credit disclosure requirements in TILA that the proposed rules would implement do not annul, alter, or affect the laws of any State relating to the disclosure of information in connection with credit transactions, except to the extent those laws are inconsistent with TILA, and then only to the extent of the inconsistency. *See* 15 U.S.C. 1610(a); 12 CFR 226.28(a)(1). Interested parties may request that the Board determine whether any such inconsistency exists, in accordance with procedures prescribed in the Board's regulations. The Board seeks comment regarding any state or local statutes or regulations that would duplicate, overlap, or conflict with the proposed rule.

G. Discussion of Significant Alternatives

The Board does not believe that reasonable alternatives to the proposed rule as a whole exist for implementing the MDIA's disclosure requirements for closed-end mortgage transactions secured by a consumer's dwelling and subject to RESPA. The Board is proposing regulations for the narrow purpose of carrying out its statutory mandate to implement the Truth in Lending Act, as amended by the MDIA. The Board nevertheless welcomes comments on any significant alternatives, consistent with the MDIA's requirements, that would minimize the impact of the proposed rule on small entities.

List of Subjects in 12 CFR Part 226

Advertising, Consumer protection, Federal Reserve System, Mortgages, Reporting and recordkeeping requirements, Truth in lending.

Text of Proposed Revisions

Certain conventions have been used to highlight the proposed revisions.

[5] *2007 HMDA Data* at 5–6 and tbl. 2.

New language, compared to the Regulation Z amendments the Board adopted in the July 2008 final rule (73 FR 44522; July 30, 2008), is shown inside bold arrows, and language that would be deleted is set off with bold brackets.

Authority and Issuance

For the reasons set forth in the preamble, the Board proposes to amend Regulation Z, 12 CFR part 226, as set forth below:

PART 226—TRUTH IN LENDING (REGULATION Z)

1. The authority citation for part 226 continues to read as follows:

Authority: 12 U.S.C. 3806; 15 U.S.C. 1604, 1637(c)(5), and 1639(l).

Subpart A—General

2. Section 226.2 is amended by revising paragraph (a)(6) to read as follows:

§ 226.2 Definitions and rules of construction.

(a) * * *

(6) *Business Day* means a day on which the creditor's offices are open to the public for carrying on substantially all of its business functions. However, for purposes of rescission under §§ 226.15 and 226.23, and for purposes of § 226.19(a)(1)(ii) ►, § 226.19(a)(2),◄ and § 226.31, the term means all calendar days except Sundays and the legal public holidays specified in 5 U.S.C. 6103(a), such as New Year's Day, the Birthday of Martin Luther King, Jr., Washington's Birthday, Memorial Day, Independence Day, Labor Day, Columbus Day, Veterans Day, Thanksgiving Day, and Christmas Day.

* * * * *

Subpart C—Closed-End Credit

3. Section 226.17 is amended by revising paragraph (f) to read as follows:

§ 226.17 General disclosure requirements.

* * * * *

(f) *Early disclosures.* If disclosures required by this subpart are given before the date of consummation of a transaction and a subsequent event makes them inaccurate, the creditor shall disclose before consummation **[**(except that, for certain mortgage transactions, § 226.19 permits redisclosure no later than consummation or settlement, whichever is later).**]**►(subject to the provisions of § 226.19(a)(2) and § 226.19(a)(5)(iii)):◄[39]

* * * * *

4. Section 226.19 is amended by revising paragraphs (a)(1)(i) and (a)(2), and adding new paragraphs (a)(3), (a)(4), and (a)(5), to read as follows:

§ 226.19 Certain mortgage and variable-rate transactions.

(a) *Mortgage transactions subject to RESPA—(1)(i) Time of disclosures.* In a mortgage transaction subject to the Real Estate Settlement Procedures Act (12 U.S.C. 2601 *et seq.*) that is secured by the consumer's **[**principal**]** dwelling, other than a home equity line of credit subject to § 226.5b ►or mortgage transaction subject to paragraph (a)(5) of this section◄, the creditor shall make good faith estimates of the disclosures required by § 226.18 **[**before consummation, or shall deliver**]**►. The creditor shall deliver**]** these good faith estimates◄ or place them in the mail not later than three business days after the creditor receives the consumer's written application, **[**whichever is earlier.**]**►and at least seven business days before consummation of the transaction.◄

* * * * *

(2) *Redisclosure required.* **[**If the annual percentage rate at the time of consummation varies from the annual percentage rate disclosed earlier by more than ⅛ of 1 percentage point in a regular transaction or more than ¼ of 1 percentage point in an irregular transaction, as defined in § 226.22, the creditor shall disclose all the changed terms no later than consummation or settlement.**]**►If the annual percentage rate disclosed in the good faith estimates required by paragraph (a)(1) of this section becomes inaccurate under § 226.22, the creditor shall make corrected disclosures to the consumer under § 226.18 with an accurate annual percentage rate, as determined under § 226.22, and all changed terms. The consumer must receive the corrected disclosures no later than three business days before consummation. If the disclosures required under this paragraph are mailed to the consumer, the consumer is deemed to have received the disclosures three business days after they are mailed.

(3) *Consumer's waiver of waiting period before consummation.* If the consumer determines that the extension of credit is needed to meet a *bona fide* personal financial emergency, the consumer may modify or waive the seven-business-day waiting period required by paragraph (a)(1)(i) of this section or the three-business-day waiting period required by paragraph (a)(2) of this section, after receiving the disclosures required by § 226.18. To modify or waive a waiting period, the consumer shall give the creditor a dated written statement that describes the emergency, specifically modifies or waives the waiting period, and bears the signature of all the consumers entitled to receive the disclosures. Printed forms for this purpose are prohibited.

(4) *Notice.* Disclosures made pursuant to paragraph (a)(1) or paragraph (a)(2) of this section shall contain the following statement: ''You are not required to complete this agreement merely because you have received these disclosures or signed a loan application.''

(5) *Timeshare plans.* In a mortgage transaction subject to the Real Estate Settlement Procedures Act (12 U.S.C. 2601 *et seq.*) that is secured by a consumer's interest in a timeshare plan described in 11 U.S.C. 101(53D)):

(i) The requirements of paragraph (a)(1) through (a)(4) of this section do not apply;

(ii) The creditor shall make good faith estimates of the disclosures required by § 226.18 before consummation, or shall deliver or place them in the mail not later than three business days after the creditor receives the consumer's written application, whichever is earlier; and

(iii) If the annual percentage rate at the time of consummation varies from the annual percentage rate disclosed under paragraph (a)(5)(ii) of this section by more than ⅛ of 1 percentage point in a regular transaction or more than ¼ of 1 percentage point in an irregular transaction, as defined in § 226.22, the creditor shall disclose all the changed terms no later than consummation or settlement.◄

* * * * *

5. In Supplement I to Part 226, under *Section 226.2—Definitions and Rules of Construction, 2(a) Definitions, 2(a)(6) Business day,* paragraph 2(a)(6)–2 is revised to read as follows:

Supplement I to Part 226—Official Staff Interpretations

* * * * *

Subpart A—General

* * * * *

Section 226.2—Definitions and Rules of Construction

2(a) Definitions.

* * * * *

2(a)(6) Business day.

* * * * *

2. **[***Rescission rule***]**►*Rule for rescission and disclosures for certain mortgage*

[39] [Reserved.]

transactions◄. A more precise rule for what is a business day (all calendar days except Sundays and the federal legal holidays specified in 5 U.S.C. 6103(a)) applies when the right of rescission or the receipt of disclosures for certain ►dwelling-secured◄ mortgage transactions under §§ 226.19(a)(1)(ii), ►226.19(a)(2),◄ or [mortgages subject to § 226.32 are] 226.31(c) ►is◄ involved. [(*See also* comment 31(c)(1)–1.)] Four federal legal holidays are identified in 5 U.S.C. 6103(a) by a specific date: New Year's Day, January 1; Independence Day, July 4; Veterans Day, November 11; and Christmas Day, December 25. When one of these holidays (July 4, for example) falls on a Saturday, federal offices and other entities might observe the holiday on the preceding Friday (July 3). [The]►In cases where the more precise rule applies, the◄ observed holiday (in the example, July 3) is a business day [for purposes of rescission or the delivery of disclosures for certain high-cost mortgages covered by § 226.32].

* * * * *

Subpart C—Closed-End Credit

6. In Supplement I to Part 226, under *Section 226.19—Certain Mortgage and Variable-Rate Transactions, 19(a)(1)(i) Time of disclosure,* paragraphs 19(a)(1)(i)–1 through 19(a)(1)(i)–5 are revised and new paragraph 19(a)(1)(i)–6 is added, heading *Paragraph 19(a)(2) Redisclosure required* and paragraphs 19(a)(2)–1 through 19(a)(2)–3 are revised and paragraph 19(a)(2)–4 is removed, new heading *19(a)(3) Consumer's waiver of waiting period before consummation* and new paragraphs 19(a)(3)–1 and 19(a)(3)–2 are added, new heading *19(a)(5)(ii) Time of disclosures for timeshare plans* and new paragraph 19(a)(5)(ii)–1 are added, and new heading *19(a)(5)(iii) Redisclosure for timeshare plans* and new paragraph 19(a)(5)(iii)–1 are added, to read as follows:

Section 226.19—Certain Mortgage and Variable-Rate Transactions

19(a)(1)(i) Time of disclosure.

1. *Coverage.* This section requires early disclosure of credit terms in mortgage transactions that are secured by a consumer's [principal] dwelling ►(other than home equity lines of credit subject to § 226.5b or mortgage transactions secured by an interest in a timeshare plan)◄ and also subject to the Real Estate Settlement Procedures Act (RESPA) and its implementing Regulation X, administered by the Department of Housing and Urban Development (HUD). To be covered by § 226.19, a transaction must be a federally related mortgage loan under RESPA. ''Federally related mortgage loan'' is defined under RESPA (12 U.S.C. 2602) and Regulation X (24 CFR 3500.2), and is subject to any interpretations by HUD. [RESPA coverage includes such transactions as loans to purchase dwellings, refinancings of loans secured by dwellings, and subordinate-lien home-equity loans, among others. Although RESPA coverage relates to any dwelling, § 226.19(a) applies to such transactions if they are secured by a consumer's principal dwelling. Also, home equity lines of credit subject to § 226.5b are not covered by § 226.19(a). For guidance on the applicability of the Board's revisions to § 226.19(a) published on July 30, 2008, see comment 1(d)(5)–1.]

2. *Timing and use of estimates.* [Truth in Lending disclosures must be given]►The disclosures required by § 226.19(a)(1)(i) must be delivered or mailed◄ [(a) before consummation or (b) within]►not later than◄ three business days after the creditor receives the consumer's written application[, whichever is earlier.] ►and at least seven business days before consummation. The general definition of ''business day'' in § 226.2(a)(6)—a day on which the creditor's offices are open to the public for substantially all of its business functions—is used for purposes of § 226.19(a)(1)(i). *See* comment 2(a)(6)–1. This general definition is consistent with the definition of ''business day'' in HUD's Regulation X—a day on which the creditor's offices are open to the public for carrying on substantially all of its business functions. *See* 24 CFR 6500.2. Accordingly, the◄[The] three►-business-◄day period in § 226.19(a)(1)(i) for making early disclosures coincides with the time period within which creditors subject to RESPA must provide good faith estimates of settlement costs. If the creditor does not know the precise credit terms, the creditor must base the disclosures on the best information reasonably available and indicate that the disclosures are estimates under § 226.17(c)(2). If many of the disclosures are estimates, the creditor may include a statement to that effect (such as ''all numerical disclosures except the late-payment disclosure are estimates'') instead of separately labelling each estimate. In the alternative, the creditor may label as an estimate only the items primarily affected by unknown information. (*See* the commentary to § 226.17(c)(2).) The creditor may provide explanatory material concerning the estimates and the contingencies that may affect the actual terms, in accordance with the commentary to § 226.17(a)(1).)

3. *Written application.* Creditors may rely on RESPA and Regulation X (including any interpretations issued by HUD) in deciding whether a ''written application'' has been received. In general, Regulation X [requires disclosures ''to every person from whom the Lender receives or for whom it prepares a written application on an application form or forms normally used by the Lender for a Federally Related Mortgage Loan'' (*See* 24 CFR 3500.6(a)).]►defines ''application'' to mean the submission of a borrower's financial information in anticipation of a credit decision relating to a federally related mortgage loan. *See* 24 CFR 3500.2(b).◄ An application is received when it reaches the creditor in any of the ways applications are normally transmitted—by mail, hand delivery, or through an intermediary agent or broker. (*See* comment 19(b)–3 for guidance in determining whether or not the transaction involves an intermediary agent or broker.) If an application reaches the creditor through an intermediary agent or broker, the application is received when it reaches the creditor, rather than when it reaches the agent or broker.

4. *Exceptions.* The creditor may determine within the three-►business-◄day period that the application will not or cannot be approved on the terms requested, as, for example, when a consumer applies for a type or amount of credit that the creditor does not offer, or the consumer's application cannot be approved for some other reason. In that case, the creditor need not make the disclosures under this section. If the creditor fails to provide early disclosures and the transaction is later consummated on the original terms, the creditor will be in violation of this provision. If, however, the consumer amends the application because of the creditor's unwillingness to approve it on its original terms, no violation occurs for not providing disclosures based on the original terms. But the amended application is a new application subject to § 226.19(a)(1)(i).

5. *Itemization of amount financed.* In many mortgage transactions, the itemization of the amount financed required by § 226.18(c) will contain items, such as origination fees or points, that also must be disclosed as part of the good faith estimates of settlement costs required under RESPA. Creditors furnishing the RESPA good faith estimates need not give consumers any itemization of the amount financed, either with the disclosures provided within three ►business◄ days after application or with the disclosures ►required by § 226.19(a)(2) and◄ given [at]►three business days before◄ consummation [or settlement].

►6. *Consummation.* The following examples illustrate when consummation may occur under § 226.19(a)(1)(i) in different circumstances:

i. A creditor that is open for business only Monday through Friday delivers the early disclosures to the consumer in person or places them in the mail on Monday, June 1. Consummation may occur on or after Wednesday, June 10, the seventh business day following delivery or mailing of the early disclosures.

ii. A creditor that is open for business seven days per week delivers the early disclosures to the consumer in person or places them in the mail on Monday, June 1. Consummation may occur on or after Monday, June 8, the seventh business day following delivery or mailing of the early disclosures.◄

* * * * *

[*Paragraph*] *19(a)(2) Redisclosure required.*

1. *Conditions for redisclosure.* [Creditors must make new disclosures if the annual percentage rate at consummation differs from the estimate originally disclosed by more than ⅛ of 1 percentage point in regular transactions or ¼ of 1 percentage point in irregular transactions, as defined in footnote 46 of § 226.22(a)(3). The creditor must also redisclose if a variable rate feature is added to the credit terms after the original disclosures have been made. The creditor has the option of redisclosing information under other circumstances, if it wishes to do

so.]►If, at the time of consummation, the APR disclosed as required by § 226.19(a)(1)(i) is accurate under § 226.22, the creditor has complied with § 226.19(a)(2). If, on the other hand, the APR disclosed as required by § 226.19(a)(1)(i) is not accurate under § 226.22, the creditor must make corrected disclosures of all changed terms (including the APR) so that the consumer receives them at least three business days before consummation. For example, assume consummation is scheduled for Thursday, June 11 and the early disclosures for a regular mortgage transaction disclose an APR of 7.00%:

i. On Thursday, June 11, the APR will be 7.10%. The creditor is not required to make corrected disclosures under § 226.19(a)(2).

ii. On Thursday, June 11, the APR will be 7.15%. The creditor must make corrected disclosures to the consumer on or before Monday, June 8.◄

2. *Content of new disclosures.* If redisclosure is required, the creditor may provide a complete set of new disclosures, or may redisclose only the ►changed◄ terms [that vary from those originally disclosed]. If the creditor chooses to provide a complete set of new disclosures, the creditor may but need not highlight the new terms, provided that the disclosures comply with the format requirements of § 226.17(a). If the creditor chooses to disclose only the new terms, all the new terms must be disclosed. For example, a different annual percentage rate will almost always produce a different finance charge, and often a new schedule of payments; all of these changes would have to be disclosed. If, in addition, unrelated terms such as the amount financed or prepayment penalty vary from those originally disclosed, the accurate terms must be disclosed. However, no new disclosures are required if the only inaccuracies involve estimates other than the annual percentage rate, and no variable rate feature has been added.

3. *Timing.* Redisclosures, when necessary ►because the annual percentage rate has become inaccurate◄, must be [given]►received by the consumer◄ no later than [''consummation or settlement.'' ''Consummation'' is defined in § 226.2(a). ''Date of settlement'' is defined in Regulation X (24 CFR 3500.2(a)) and is subject to any interpretations issued under RESPA and Regulation X.]►three business days before consummation. (For redisclosures triggered by other events, the creditor must provide corrected disclosures before consummation. *See* § 226.17(f).) For purposes of § 226.19(a)(2), ''business day'' means all calendar days except Sundays and the legal public holidays referred to in § 226.2(a)(6). *See* comment 2(a)(6)–2. If the creditor delivers the corrected disclosures to the consumer in person, consummation may occur any time on the third business day following delivery. If the creditor places the disclosures in the mail, the consumer is considered to have received them three business days after they are mailed. For example, if the creditor places the disclosures in the mail on Thursday, June 4, the disclosures are considered received on Monday, June 8 and consummation may occur any time on or after Thursday, June 11.◄

[4. *Basis of disclosures.* In some cases, a creditor may delay redisclosure until settlement, which may be at a time later than consummation. If a creditor chooses to redisclose at settlement, disclosures may be based on the terms in effect at settlement, rather than at consummation. For example, in a variable-rate transaction, a creditor may choose to base disclosures on the terms in effect at settlement despite the general rule in the commentary to § 18(f) that variable-rate disclosures should be based on the terms in effect at consummation.]

►*19(a)(3) Consumer's waiver of waiting period before consummation.*

1. *Modification or waiver.* A consumer may modify or waive the right to the waiting period required by § 226.19(a)(1)(i) or § 226.19(a)(2) only after the creditor makes the disclosures required by § 226.18. The consumer must have a *bona fide* personal financial emergency that necessitates consummating the credit transaction before the end of the waiting period. Whether a *bona fide* personal financial emergency must be met before the end of the waiting period is determined by the facts surrounding individual situations. The imminent sale of the consumer's home at foreclosure during the waiting period is one example of a *bona fide* personal financial emergency. Each consumer entitled to receive the required disclosures must sign the written statement for the waiver to be effective.

2. *Examples.* Assume the early disclosures are delivered to the consumer in person on Monday, June 1, and at that time the consumer executes a waiver of the seven-business-day waiting period (which would end on Tuesday, June 9) so that the loan can be consummated on Friday, June 5:

i. If the APR on the early disclosures is inaccurate under § 226.22, the creditor must provide a corrected disclosure to the consumer before consummation, which triggers the three-business-day waiting period in § 226.19(a)(2). After the consumer receives the corrected disclosure, the consumer must execute a waiver of the three-business-day waiting period in order to consummate the transaction on June 5.

ii. If a change occurs that does not render the APR on the early disclosures inaccurate under § 226.22, the creditor must disclose the changed terms before consummation, consistent with § 226.17(f). Disclosure of the changed terms does not trigger an additional waiting period, and the transaction may be consummated on June 5 without obtaining an additional modification or waiver from the consumer.

19(a)(5)(ii) Time of disclosures for timeshare plans.

1. *Timing and use of estimates.* A mortgage transaction secured by a consumer's interest in a ''timeshare plan,'' as defined in 11 U.S.C. 101(53D), that is also a federally related mortgage loan under RESPA is subject to the requirements of § 226.19(a)(5) instead of the requirements of § 226.19(a)(1) through § 226.19(a)(4). *See* comment 19(a)(1)(i)–1. Early disclosures for transactions subject to § 226.19(a)(5) must be given (a) before consummation or (b) within three business days after the creditor receives the consumer's written application, whichever is earlier. The general definition of ''business day'' in § 226.2(a)(6)—a day on which the creditor's offices are open to the public for substantially all functions—applies for purposes of § 226.19(a)(5)(ii). *See* comment 2(a)(6)–1. These timing requirements are different than the timing requirements under § 226.19(a)(1)(i). Although timeshare transactions covered by § 226.19(a)(5) are not subject to the seven-business-day waiting period in § 226.19(a)(1)(i), in all other respects, the early disclosure requirements under § 226.19(a)(5)(ii) apply in the same manner as the requirements under § 226.19(a)(1)(i). For example, the commentary to § 226.19(a)(1)(i) concerning the permissible use of estimates and the definition of ''written application'' under § 226.19(a)(1)(i) also apply to § 226.19(a)(5)(ii). *See* comments 19(a)(1)(i)–2 and 19(a)(1)(i)–3.

19(a)(5)(iii) Redisclosure for timeshare plans.

1. *Consummation or settlement.* For extensions of credit secured by a consumer's timeshare plan, when corrected disclosures are required, they must be given no later than ''consummation or settlement.'' ''Consummation'' is defined in § 226.2(a). ''Settlement'' is defined in Regulation X (24 CFR 3500.2(b)) and is subject to any interpretations issued under RESPA and Regulation X. In some cases, a creditor may delay redisclosure until settlement, which may be at a time later than consummation. If a creditor chooses to redisclose at settlement, disclosures may be based on the terms in effect at settlement, rather than at consummation. For example, in a variable-rate transaction, a creditor may choose to base disclosures on the terms in effect at settlement, despite the general rule in the commentary to section 18(f) that variable-rate disclosures should be based on the terms in effect at consummation. Although the three-business-day waiting period in § 226.19(a)(2) does not apply to timeshare transactions, in all other respects the requirements for corrected disclosures under § 226.19(a)(5)(iii) apply in the same manner as the requirements under § 226.19(a)(2). For example, to make corrected disclosures, the creditor may provide a complete set of new disclosures or may redisclose only those terms that vary from those originally disclosed. *See* comment 19(a)(2)–2.◄

Supplement I to Part 226 [Amended]

7. In Supplement I to Part 226, under *Section 226.31—General Rules,* heading *Paragraph 31(c)(2) Disclosures for reverse mortgages* and paragraph 31(c)(2)–1 are revised, to read as follows:

Subpart E—Special Rules for Certain Home Mortgage Transactions

* * * * *

Section 226.31—General Rules

* * * * *

[*Paragraph*] *31(c)(2) Disclosures for reverse mortgages.*

1. *Business days.* For purposes of providing reverse mortgage disclosures,

''business day'' has the same meaning as in comment 31(c)(1)–[2]►1◄—all calendar days except Sundays and the federal legal holidays listed in 5 U.S.C. 6103(a). This means if disclosures are provided on a Friday, consummation could occur any time on Tuesday, the third business day following receipt of the disclosures.

* * * * *

By order of the Board of Governors of the Federal Reserve System, December 4, 2008.

Jennifer J. Johnson,

Secretary of the Board.

[FR Doc. E8–29123 Filed 12–9–08; 8:45 am]

BILLING CODE 6210–01–P

DEPARTMENT OF TRANSPORTATION

Federal Aviation Administration

14 CFR Part 39

[Docket No. FAA–2006–23646; Directorate Identifier 2006–CE–005–AD]

RIN 2120–AA64

Airworthiness Directives; Air Tractor, Inc., Models AT–400, AT–401, AT–401B, AT–402, AT–402A, and AT–402B Airplanes

AGENCY: Federal Aviation Administration (FAA), Department of Transportation (DOT).

ACTION: Notice of proposed rulemaking (NPRM).

SUMMARY: We propose to revise Airworthiness Directive (AD) 2006–08–08, which applies to certain Air Tractor, Inc. (Air Tractor), Models AT–400, AT–401, AT–401B, AT–402, AT–402A, and AT–402B airplanes. AD 2006–08–08 currently requires you to repetitively eddy current inspect the wing lower spar cap in order to reach the safe life and, for certain Models AT–402A and AT–402B airplanes and those that incorporate or have incorporated Marburger Enterprises, Inc. (Marburger), winglets, lowers the safe life for the wing lower spar cap. Since we issued AD 2006–08–08, we have received information to update inspection intervals for the Models AT–401B, AT–402A, and AT–402B airplanes based on a revised damage tolerance analysis. Consequently, this proposed AD would not only retain the actions of AD 2006–08–08, but would reduce the number of repetitive inspections for all affected Model AT–401B airplanes and certain Models AT–402A and AT–402B airplanes. We are proposing this AD to prevent fatigue cracks from occurring in the wing lower spar cap before the originally established safe life is reached. Fatigue cracks in the wing lower spar cap, if not detected and corrected, could result in wing separation and loss of control of the airplane.

DATES: We must receive comments on this proposed AD by February 9, 2009.

ADDRESSES: Use one of the following addresses to comment on this proposed AD:

- *Federal eRulemaking Portal: Go to http://www.regulations.gov.* Follow the instructions for submitting comments.
- *Fax:* (202) 493–2251.
- *Mail:* U.S. Department of Transportation, Docket Operations, M–30, West Building Ground Floor, Room W12–140, 1200 New Jersey Avenue, SE., Washington, DC 20590.
- *Hand Delivery:* U.S. Department of Transportation, Docket Operations, M–30, West Building Ground Floor, Room W12–140, 1200 New Jersey Avenue, SE., Washington, DC 20590, between 9 a.m. and 5 p.m., Monday through Friday, except Federal holidays.

For service information identified in this proposed AD, contact Air Tractor, Inc., P.O. Box 485, Olney, Texas 76374; telephone: (940) 564–5616; facsimile: (940) 564–5612; Internet: *http://www.airtractor.com;* or Marburger Enterprises, Inc., 1227 Hillcourt, Williston, North Dakota 58801; telephone: (800) 893–1420 or (701) 774–0230; facsimile: (701) 572–2602.

FOR FURTHER INFORMATION CONTACT: Direct all questions to:

—For airplanes that do not incorporate and never have incorporated Marburger winglets: Rob Romero, Aerospace Engineer, FAA, Fort Worth Airplane Certification Office, 2601 Meacham Boulevard, Fort Worth, Texas 76193–0150; telephone: (817) 222–5102; facsimile: (817) 222–5960; and

—For airplanes that incorporate or have incorporated Marburger Enterprises, Inc., winglets: John Cecil, Aerospace Engineer, Los Angeles Aircraft Certification Office, FAA, 3960 Paramount Boulevard, Lakewood, California, 90712; telephone: (562) 627–5228; facsimile: (562) 627–5210.

SUPPLEMENTARY INFORMATION:

Comments Invited

We invite you to send any written relevant data, views, or arguments regarding this proposed AD. Send your comments to an address listed under the **ADDRESSES** section. Include the docket number, ''FAA–2006–23646; Directorate Identifier 2006–CE–005–AD'' at the beginning of your comments. We specifically invite comments on the overall regulatory, economic, environmental, and energy aspects of the proposed AD. We will consider all comments received by the closing date and may amend the proposed AD in light of those comments.

We will post all comments we receive, without change, to *http://www.regulations.gov,* including any personal information you provide. We will also post a report summarizing each substantive verbal contact we receive concerning this proposed AD.

Discussion

An Air Tractor Model AT–502A experienced an in-flight wing separation. As a result, the FAA issued AD 2000–14–51 as an emergency AD. That AD required the inspection of the wing lower spar cap for cracks on Air Tractor Models AT–501, AT–502, and AT–502A airplanes and modification or replacement of any cracked wing lower spar cap. Since the release of that AD, the manufacturer has evaluated the AT–400, AT–500, AT–600, and AT–800 series lower spar cap fatigue life.

AD 2006–08–08 currently requires you to repetitively eddy current inspect the wing lower spar cap for fatigue cracks in order to reach the safe life and, for certain Models AT–402A and AT–402B airplanes and those that incorporate or have incorporated Marburger winglets, lowers the safe life for the wing lower spar cap.

Since we issued AD 2006–08–08, we have received updated inspection intervals for fatigue cracks for the Models AT–401B, AT–402A, and AT–402B airplanes based on a revised damage tolerance analysis. Any occurrence of fatigue cracks in the wing lower spar cap, if not detected and corrected, could result in wing separation and loss of control of the airplane.

The following table contains AD actions that address the wing spar safe life of the Air Tractor airplane fleet:

RELATED AD ACTIONS

AD No.	Affected Air Tractor Airplane Model	Issue date
2003–07–04	AT–300, AT–400, AT–400A, AT–401, AT–401B, AT–402, AT–402A, AT–402B, AT–501, AT–502, and AT–502B.	March 25, 2003.
2006–08–08	AT–400, AT–401, AT–401B, AT–402, AT–402A, and AT–402B	April 10, 2006.
2006–08–09	AT–802 and AT–802A	April 10, 2006.
2006–23–09	AT–602	October 26, 2006.
2006–24–10	AT–501, AT–502, AT–502A, AT–502B, and AT–503A	November 22, 2006.
2008–09–10	AT–300, AT–301, AT–302, AT–400, and AT–400A	April 18, 2008.

You may view these Airworthiness Directives at the following Internet Web site addresses: *http://rgl.faa.gov* or *http://www.gpoaccess.gov/fr/index.html.*

Relevant Service Information

We have reviewed this Snow Engineering Co. service information:

- Process Specification #197, page 1, revised June 4, 2002, pages 2 through 4, dated February 23, 2001, and page 5, dated May 3, 2002;
- Drawing Number 21088, dated November 3, 2004; and
- Service Letter #202, page 3, dated October 16, 2000.

Snow Engineering Co. has a licensing agreement with Air Tractor that allows them to produce technical data to use for Air Tractor products.

The process specification and drawing include procedures for doing the eddy-current inspection and replacing the spar caps and associated hardware. The service letter provides information for installing access panels, if not already installed.

FAA's Determination and Requirements of the Proposed AD

We are proposing this AD because we evaluated all information and determined the unsafe condition described previously is likely to exist or develop on other products of the same type design. This proposed AD would revise AD 2006–08–08 with a new AD that would not only retain the actions AD 2006–08–8, but would reduce the number of repetitive inspections for:

- All affected Model AT–401B airplanes;
- Model AT–402A airplanes, all serial numbers beginning with 0952; and
- Model AT–402B airplanes, all serial numbers beginning with 0966.

This proposed AD would require you to use the service information described previously to perform these actions.

Costs of Compliance

We estimate that this AD affects 343 airplanes in the U.S. registry.

We estimate the following costs to do the inspection. We have no way of determining the number of airplanes that may need repair or modification as a result of any inspection:

Labor cost	Parts cost	Total cost per airplane	Total cost on U.S. operators
* $500 to $800	Not Applicable	$500 to $800	$171,500 to $274,400.

* Eddy-current inspections are an estimated flat cost that includes labor and use of equipment.

We estimate the following costs to do the modification. We have no way of determining the number of airplanes that may need this modification:

Labor cost	Parts cost	Total cost per airplane
120 work-hours × $80 = $9,600	$11,500	$21,100

We estimate the following costs to do the replacement. We have no way of determining the number of airplanes that may need this replacement:

Labor cost	Parts cost	Total cost per airplane
$16,500	$16,500	$33,000

* The labor costs of the replacement are an estimated flat cost that includes labor and use of equipment.

Authority for this Rulemaking

Title 49 of the United States Code specifies the FAA's authority to issue rules on aviation safety. Subtitle I, section 106, describes the authority of the FAA Administrator. Subtitle VII, Aviation Programs, describes in more detail the scope of the Agency's authority.

We are issuing this rulemaking under the authority described in Subtitle VII, Part A, Subpart III, section 44701, ''General requirements.'' Under that section, Congress charges the FAA with promoting safe flight of civil aircraft in air commerce by prescribing regulations for practices, methods, and procedures the Administrator finds necessary for safety in air commerce. This regulation is within the scope of that authority because it addresses an unsafe condition that is likely to exist or develop on products identified in this rulemaking action.

Regulatory Findings

We have determined that this proposed AD would not have federalism implications under Executive Order 13132. This proposed AD would not have a substantial direct effect on the States, on the relationship between the national Government and the States, or on the distribution of power and responsibilities among the various levels of government.

For the reasons discussed above, I certify that the proposed regulation:

1. Is not a ''significant regulatory action'' under Executive Order 12866;

2. Is not a ''significant rule'' under the DOT Regulatory Policies and Procedures (44 FR 11034, February 26, 1979); and

3. Will not have a significant economic impact, positive or negative, on a substantial number of small entities under the criteria of the Regulatory Flexibility Act.

We prepared a regulatory evaluation of the estimated costs to comply with this proposed AD and placed it in the AD docket.

Examining the AD Docket

You may examine the AD docket that contains the proposed AD, the regulatory evaluation, any comments received, and other information on the Internet at *http://www.regulations.gov*; or in person at the Docket Management Facility between 9 a.m. and 5 p.m., Monday through Friday, except Federal holidays. The Docket Office (telephone (800) 647–5527) is located at the street address stated in the **ADDRESSES** section. Comments will be available in the AD docket shortly after receipt.

List of Subjects in 14 CFR Part 39

Air transportation, Aircraft, Aviation safety, Incorporation by reference, Safety.

The Proposed Amendment

Accordingly, under the authority delegated to me by the Administrator, the FAA proposes to amend 14 CFR part 39 as follows:

PART 39—AIRWORTHINESS DIRECTIVES

1. The authority citation for part 39 continues to read as follows:

Authority: 49 U.S.C. 106(g), 40113, 44701.

§ 39.13 [Amended]

2. The FAA amends § 39.13 by removing Airworthiness Directive (AD) 2006–08–08, Amendment 39–14563 (71 FR 19986, April 19, 2006), and adding the following new AD:

Air Tractor, Inc.: Docket No. FAA–2006–23646; Directorate Identifier 2006–CE–005–AD.

Comments Due Date

(a) We must receive comments on this AD action by February 9, 2009.

Affected ADs

(b) This AD revises AD 2006–08–08, Amendment 39–14563.

Applicability

(c) This AD applies to certain Models AT–400, AT–401, AT–401B, AT–402, AT–402A, and AT–402B airplanes that are certificated in any category. Use paragraph (c)(1) of this AD for affected airplanes that do not incorporate and never have incorporated Marburger winglets. Use paragraph (c)(3) of this AD for airplanes that have been modified to install lower spar caps, part number (P/N) 21058–1 and P/N 21058–2. Use paragraph (c)(4) of this AD for certain Models AT–401, AT–401B, AT–402, AT–402A, and AT–402B airplanes that incorporate or have incorporated Marburger winglets.

(1) The following table applies to airplanes that do not incorporate and never have incorporated Marburger winglets along with the safe life (presented in hours time-in-service (TIS)) of the wing lower spar cap for all affected airplane models and serial numbers:

TABLE 1—SAFE LIFE FOR AIRPLANES THAT DO NOT INCORPORATE AND NEVER HAVE INCORPORATED MARBURGER WINGLETS

Model	Serial Nos.	Wing lower spar cap safe life (hours TIS)
AT–400	All beginning with 0416	13,300
AT–401	0662 through 0951	10,757
AT–401B	0952 through 1020, except 1015	6,948
AT–401B	1015 and all beginning with 1021	7,777
AT–402	0694 through 0951	7,440
AT–402A	0738 through 0951	7,440
AT–402A	0952 through 1020	2,000
AT–402A	All beginning with 1021	2,300
AT–402B	0966 through 1020, except 1015	2,000
AT–402B	1015 and all beginning with 1021	2,300

(2) If piston-powered aircraft have been converted to turbine power, you must use the limits for the corresponding serial number turbine-powered aircraft.

(3) If you have an aircraft that has been modified by installing lower spar caps, P/N 21058–1 and P/N 21058–2, you must use a wing lower spar cap safe life of 9,800 hours TIS. No inspections are required to reach this life.

(i) Airplanes that have been modified with replacement spar caps, P/N 21058–1 and P/N 21058–2, are not eligible to have Supplemental Type Certificate (STC) No. SA00490LA, Marburger winglets, installed.

(ii) If your airplane currently has spar caps, P/N 21058–1 and P/N 21058–2, and winglets installed, then you must remove the winglets before further flight and you must contact the FAA at the address in paragraph (m)(1) of this AD for a new safe life.

(iii) Installation of Marburger winglets on airplanes that have been modified with replacement spar caps, P/N 21058–1 and P/N 21058–2, will require additional fatigue data substantiating an appropriate safe-life. If you have replacement spar caps and wish to install winglets, you must contact the FAA at the address in paragraph (m)(2) of this AD for additional information.

(4) The following table applies to airplanes that incorporate or have incorporated Marburger winglets. These winglets are installed following STC No. SA00490LA. Use the winglet usage factor in Table 2 of paragraph (c)(4) of this AD, the wing lower spar cap safe life specified in Table 1 of paragraph (c)(1) of this AD, and the instructions included in Appendix 1 to this AD to determine the new safe life of airplanes that incorporate or have incorporated Marburger winglets:

TABLE 2—WINGLET USAGE FACTOR TO DETERMINE THE SAFE LIFE FOR AIRPLANES THAT INCORPORATE OR HAVE INCORPORATED MARBURGER WINGLETS PER STC NO. SA00490LA

Model	Serial Nos.	Winglet usage factor
AT–401	0662 through 0951	1.6
AT–401B	0952 through 1020, except 1015	1.1
AT–401B	1015 and all beginning with 1021	1.1
AT–402	0694 through 0951	1.6
AT–402A	0738 through 0951	1.6
AT–402A	0952 through 1020	1.1
AT–402A	All beginning with 1021	1.1
AT–402B	0966 through 1020, except 1015	1.1
AT–402B	1015 and all beginning with 1021	1.1

Unsafe Condition

(d) This AD is the result of fatigue cracking of the wing main spar lower cap at the center splice joint outboard fastener hole. The actions specified in this AD are intended to detect and correct cracks in the wing main spar lower cap, which could result in failure of the spar cap and lead to wing separation and loss of control of the airplane.

Compliance

(e) *Safe Life Record:* For all affected airplanes, modify the applicable aircraft records (logbook) as follows to show the safe life for the wing lower spar cap listed in this AD (use the information from paragraph (c) of this AD and Appendix 1 to this AD, as applicable).

(1) Incorporate the following into the aircraft logbook: ''Following this AD, the wing lower spar cap is life limited to ____ hours time-in-service (TIS).'' Insert the applicable safe life number from the applicable tables in paragraph (c) of this AD and Appendix 1 to this AD.

(i) Do the logbook entry within the next 10 hours TIS after April 21, 2006 (the effective date of AD 2006–08–08).

(ii) A person holding at least a private pilot certificate as authorized by section 43.7 of the Federal Aviation Regulations (14 CFR 43.7) may modify the aircraft records. Make an entry into the aircraft logbook showing compliance with this portion of the AD in accordance with section 43.9 of the Federal Aviation Regulations (14 CFR 43.9)..

(2) *Wing Spar Replacement:* For all affected airplanes, replace the wing lower spar cap following Snow Engineering Drawing Number 21088, dated November 3, 2004. Replace upon accumulating the safe life used in paragraph (e)(1) of this AD or within the next 50 hours TIS after April 21, 2006 (the effective date of AD 2006–08–08), whichever occurs later. The owner/operator may not do the spar cap replacement, unless he/she is a properly certified mechanic.

(f) *Inspection Requirements:* For all affected airplanes, except Model AT–402A, all serial numbers beginning with 0952, and Model AT–402B, all serial numbers beginning with 0966, do the initial inspection of the outboard two lower spar cap bolt holes using the wing spar lower cap TIS schedules listed in Table 3. Follow Snow Engineering Co. Process Specification #197, page 1, revised June 4, 2002, pages 2 through 4, dated February 23, 2001, and page 5, dated May 3, 2002. After the initial inspection, perform repetitive inspections at the repetitive inspection intervals listed in Table 3. Use the same procedure for the repetitive inspections as for the initial inspection. If not already done, install access panels at the time of the first inspection following Snow Engineering Service Letter #202, page 3, dated October 16, 2000.

Note: Hours listed in the table are in hours TIS and the phrase ''within the next ____ hours'' refers to ''within the next ____ hours after April 21, 2006 (the effective date of AD 2006–08–08).''

TABLE 3—INSPECTION TIMES

Model	Serial Nos.	Current wing spar lower cap TIS hours	Initial inspection	Repetitive inspection interval (hours)
AT–400	All beginning with 0416.	Greater than 7,750	Within the next 50 hours TIS or upon the accumulation of 8,000 hours TIS, whichever is later.	900
AT–401	0662–0951	Greater than 6,250	Within the next 50 hours TIS or upon the accumulation of 6,500 hours TIS, whichever is later.	700
AT–401	0662–0951	Greater than 4,350 but less than or equal to 6,250.	Within the next 250 hours TIS or upon the accumulation of 4,850 hours TIS, whichever is later.	700
AT–401	0662–0951	Greater than 2,750 but less than or equal to 4,350.	Within the next 500 hours TIS	700
AT–401	0662–0951	Less than or equal to 2,750	Upon the accumulation of 3,250 hours TIS.	700
AT–401B	0952–1020 except 1015.	Greater than 3,950	Within the next 50 hours TIS or upon the accumulation of 4,200 hours TIS, whichever is later.	600
AT–401B	0952–1020 except 1015.	Greater than 2,650 but less than or equal to 3,950.	Within the next 250 hours TIS or upon the accumulation of 3,150 hours TIS, whichever is later.	600
AT–401B	0952–1020 except 1015.	Greater than 1,600 but less than or equal to 2,650.	Within the next 500 hours TIS	600
AT–401B	0952–1020 except 1015.	Less than or equal to 1,600	Upon the accumulation of 2,100 hours TIS.	600

TABLE 3—INSPECTION TIMES—Continued

Model	Serial Nos.	Current wing spar lower cap TIS hours	Initial inspection	Repetitive inspection interval (hours)
AT–401B	1015 and 1021–1124.	Greater than 4,450	Within the next 50 hours TIS or upon the accumulation of 4,700 hours TIS, whichever is later.	600
AT–401B	1015 and 1021–1124.	Greater than 3,000 but less than or equal to 4,450.	Within the next 250 hours TIS or upon the accumulation of 3,500 hours TIS, whichever is later.	600
AT–401B	1015 and 1021–1124.	Greater than 1,850 but less than or equal to 3,000.	Within the next 500 hours TIS	600
AT–401B	1015 and 1021–1124.	Less than or equal to 1,850	Upon the accumulation of 2,350 hours TIS.	600
AT–401B	All beginning with 1125.	Greater than 4,450	Within the next 50 hours TIS or upon the accumulation of 4,700 hours TIS, whichever is later.	1,000
AT–401B	All beginning with 1125.	Greater than 3,000 but less than or equal to 4,450.	Within the next 250 hours TIS or upon the accumulation of 3,500 hours TIS, whichever is later.	1,000
AT–401B	All beginning with 1125.	Greater than 1,850 but less than or equal to 3,000.	Within the next 500 hours TIS	1,000
AT–401B	All beginning with 1125.	Less than or equal to 1,850	Upon the accumulation of 2,350 hours TIS.	1,000
AT–402/AT–402A	0694–0951	Greater than 4,250	Within the next 50 hours TIS or upon the accumulation of 4,500, whichever is later.	700
AT–402/AT–402A	0694–0951	Greater than 2,850 but less than or equal to 4,250.	Within the next 250 hours TIS or upon the accumulation of 3,350 hours TIS, whichever is later.	700
AT–402/AT–402A	0694–0951	Greater than 1,750 but less than or equal to 2,850.	Within the next 500 hours TIS	700
AT–402/AT–402A	0694–0951	Less than or equal to 1,750	Upon the accumulation of 2,250 hours TIS.	700

(g) *For all affected airplanes:* Before further flight after the inspection in which cracks are found, replace any cracked wing lower spar cap following Snow Engineering Drawing Number 21088, dated November 3, 2004.

(h) *For all affected airplanes, except Model AT–402A, all serial numbers beginning with 0952, and except Model AT–402B, all serial numbers beginning with 0966:* Report to the FAA any cracks detected as the result of each inspection required by paragraph (f) of this AD on the form in Figure 1 of this AD.

(1) Only if cracks are found, send the report within 10 days after the inspection required in paragraph (f) of this AD.

(2) The Office of Management and Budget (OMB) approved the information collection requirements contained in this regulation under the provisions of the Paperwork Reduction Act and assigned OMB Control Number 2120–0056.

(i) *For all affected airplanes:* Upon the accumulation of the life used in paragraph (e)(1) of this AD or within the next 50 hours TIS after April 21, 2006 (the effective date of AD 2006–08–08), whichever occurs later, you must replace your wing lower spar cap before further flight following Snow Engineering Drawing Number 21088, dated November 3, 2004.

(j) *For Model AT–402A airplanes, all serial numbers beginning with 0952; and Model AT–402B airplanes, all serial numbers beginning with 0966:* In lieu of the safe life used in paragraph (e)(1) of this AD, you may eddy-current inspect and modify the wing lower spar cap. The inspection schedule and modification procedures are included in Appendix 2 to this AD.

(k) *For all affected airplanes (those complying with the actions in the AD or alternative method of compliance (AMOC)):* One of the following must do the inspection:

(1) A level 2 or 3 inspector certified in eddy current inspection using the guidelines established by the American Society for Nondestructive Testing or MIL–STD–410; or

(2) A person authorized to perform AD work and who has completed and passed the Air Tractor, Inc. training course on Eddy Current Inspection on wing lower spar caps.

BILLING CODE 4910–13–P

Docket No. FAA-2006-23646 Inspection Report *(Report Only if Cracks are Found)*	
1. Inspection Performed By:	2. Phone:
3. Aircraft Model:	4. Aircraft Serial Number:
5. Engine Model Number:	6. Aircraft Total Hours TIS:
7. Wing Total Hours TIS:	8. Lower Spar Cap Hours TIS:
9. Has the lower spar cap been inspected before? (Eddy-current, Dye penetrant, magnetic particle, ultrasound) ☐ Yes ☐ No	9a. If yes, Date: _____ Inspection Method: _____ Lower Spar Cap Hours TIS: _____ Cracks found? ☐ Yes ☐ No
10. Has there been any major repair or alteration performed to the spar cap? ☐ Yes ☐ No	10a. If yes, specify (Description and hours TIS)
11. Date of AD inspection:_____	
12. Inspection Results: (Note: Report only if cracks are found)	12a. ☐ Left Hand ☐ Right Hand
12b. Crack Length:_____	12c. Does drilling hole to next larger size remove all traces of the crack(s)? ☐ Yes ☐ No
12d. Corrective Action Taken:	

Figure 1

BILLING CODE 4910–13–C

Mail report to: Manager, Fort Worth ACO, ASW–150, 2601 Meacham Blvd., Fort Worth, TX 76193–0150; or fax to (817) 222–5960.

Special Flight Permit

(l) Under 14 CFR part 39.23, we are allowing special flight permits for the purpose of compliance with this AD under the following conditions:

(1) Only operate in day visual flight rules (VFR).

(2) Ensure that the hopper is empty.

(3) Limit airspeed to 135 miles per hour (mph) indicated airspeed (IAS).

(4) Avoid any unnecessary g-forces.

(5) Avoid areas of turbulence.

(6) Plan the flight to follow the most direct route.

Alternative Methods of Compliance (AMOCs)

(m) The Manager, Fort Worth or Los Angeles Airplane Certification Office (ACO), FAA, has the authority to approve AMOCs for this AD, if requested using the procedures found in 14 CFR 39.19. Before using any approved AMOC on any airplane to which the AMOC applies, notify your appropriate principal inspector (PI) in the FAA Flight Standards District Office (FSDO), or lacking a PI, your local FSDO. For AMOC approval, send information to ATTN:

(1) For the airplanes that do not incorporate and never have incorporated Marburger winglets: Rob Romero, Aerospace Engineer, FAA, Fort Worth Airplane Certification Office, 2601 Meacham Boulevard, Fort Worth, Texas 76193–0150; telephone: (817) 222–5102; facsimile: (817) 222–5960.

(2) For airplanes that incorporate or have incorporated Marburger winglets: John Cecil, Aerospace Engineer, Los Angeles Aircraft Certification Office, FAA, 3960 Paramount Boulevard, Lakewood, California 90712; telephone: (562) 627–5228; facsimile: (562) 627–5210.

(n) AMOCs approved for AD 2001–10–04, AD 2001–10–04 R1, or AD 2002–11–05 for the AT–400 series airplanes are not considered approved for this AD.

(o) AMOCs approved for the repetitive inspection requirements of AD 2006–08–08 are approved for this AD until the scheduled modification date required by this AD.

Related Information

(p) To get copies of the service information referenced in this AD, contact Air Tractor, Incorporated, P.O. Box 485, Olney, Texas 76374; telephone: (940) 564–5616; facsimile: (940) 564–5612; Internet: *http://www.airtractor.com*; or Marburger Enterprises, Inc., 1227 Hillcourt, Williston, North Dakota 58801; telephone: (800) 893–1420 or (701) 774–0230; facsimile: (701) 572–2602. To view the AD docket, go to U.S. Department of Transportation, Docket Operations, M–30, West Building Ground Floor, Room W12–140, 1200 New Jersey Avenue, SE., Washington, DC 20590, or on the Internet at *http://www.regulations.gov*.

Appendix 1 to Docket No. FAA–2006–23646

The following provides procedures for determining the safe life for those Models AT–401, AT–401B, AT–402, AT–402A, and AT–402B airplanes that incorporate or have incorporated Marburger winglets. These winglets are installed following Supplemental Type Certificate (STC) No. SA00490LA.

What if I removed the Marburger winglets prior to further flight after April 21, 2006 (the effective date of AD 2006–08–08) or prior to April 21, 2006 (the effective date of AD 2006–08–08)?

1. Review your airplane's logbook to determine your airplane's time in service (TIS) with winglets installed per Marburger STC No. SA00490LA. This includes all time spent with the winglets currently installed and any previous installations where the winglet was installed and later removed.

Example: A review of your airplane's logbook shows that you have accumulated 350 hours TIS since incorporating Marburger STC No. SA00490LA. Further review of the airplane's logbook shows that a previous owner had installed the STC and later removed the winglets after accumulating 150 hours TIS. Therefore, your airplane's TIS with the winglets installed is 500 hours.

If you determine that the winglet STC has never been incorporated on your airplane, then your safe life is presented in paragraph (c)(1) of this AD. Any future winglet installation will be subject to a reduced safe life per these instructions.

2. Determine your airplane's unmodified safe life from paragraph (c)(1) of this AD.

Example: Your airplane is a Model AT–401B, serial number 1022. From paragraph (c)(1) of this AD, the unmodified safe life of your airplane is 7,777 hours TIS.

All examples from hereon will be based on the Model AT–401B, serial number 1022 airplane.

3. Determine the winglet usage factor from paragraph (c)(4) of this AD.

Example: Again, your airplane is a Model AT–401B, serial number 1022. From paragraph (c)(4) of this AD, your winglet usage factor is 1.1.

4. Adjust the winglet TIS to account for the winglet usage factor. Multiply the winglet TIS (result of Step 1 above) by the winglet usage factor (result of Step 3 above).

Example: Winglet TIS is 500 hours × a winglet usage factor of 1.1. The adjusted winglet TIS is 550 hours.

5. Calculate the winglet usage penalty. Subtract the winglet TIS (result of Step 1 above) from the adjusted winglet TIS (result of Step 4 above).

Example: Adjusted winglet TIS – the winglet TIS = winglet usage penalty.

(550 hours) – (500 hours TIS) = (50 hours TIS).

6. Adjust the safe life of your airplane to account for winglet usage. Subtract the winglet usage penalty (result of Step 5 above) result from the unmodified safe life from paragraph (c)(1) of this AD (result of Step 2 above.).

Example: Unmodified safe life – winglet usage penalty = adjusted safe life.

(7,777 hours TIS) – (50 hours TIS) = (7,727 hours TIS).

7. If you remove the winglets from your airplane before further flight or no longer have the winglets installed on your airplane, the safe life of your airplane is the adjusted safe life (result of Step 6 above). Enter this number in paragraph (e)(1) of this AD and the airplane logbook.

What if I have the Marburger winglet installed as of April 21, 2006 (the effective date of AD 2006–08–08) and plan to operate my airplane without removing the winglet?

1. Review your airplane's logbook to determine your airplane's TIS without the winglets installed.

Example: A review of your airplane's logbook shows that you have accumulated 1,500 hours TIS, including 500 hours with the Marburger winglets installed. Therefore, your airplane's TIS without the winglets installed is 1,000 hours.

2. Determine your airplane's unmodified safe life from paragraph (c)(1) of this AD.

Example: Your airplane is a Model AT–401B, serial number 1022. From paragraph (c)(1) of this AD, the unmodified safe life of your airplane is 7,777 hours TIS.

All examples from hereon will be based on the Model AT–401B, serial number 1022 airplane.

3. Determine the winglet usage factor from paragraph (c)(4) of this AD.

Example: Again, your airplane is a Model AT–401B, serial number 1022. From paragraph (c)(4) of this AD, your winglet usage factor is 1.1.

4. Determine the potential winglet TIS. Subtract the TIS without the winglets installed (result of Step 1 above) from the unmodified safe life (result of Step 2 above).

Example: Unmodified safe life – TIS without winglets = Potential winglet TIS.

(7,777 hours TIS) – (1,000 hours TIS) = (6,777 hours TIS).

5. Adjust the potential winglet TIS to account for the winglet usage factor. Divide the potential winglet TIS (result of Step 4 above) by the winglet usage factor (result of Step 3 above).

Example: Potential winglet TIS ÷ Winglet usage factor = Adjusted potential winglet TIS.

(6,777 hours TIS) ÷ (1.1) = (6,155 hours TIS).

6. Calculate the winglet usage penalty. Subtract the adjusted potential winglet TIS (result of Step 5 above) from the potential winglet TIS (result of Step 4 above).

Example: Potential winglet TIS – Adjusted potential winglet TIS = Winglet usage penalty.

(6,777 hours TIS) – (6,155 hours TIS) = (622 hours TIS).

7. Adjust the safe life of your airplane to account for the winglet installation. Subtract the winglet usage penalty (result of Step 6 above) from the unmodified safe life from paragraph (c)(1) of this AD (the result of Step 2 above).

Example: Unmodified safe life – Winglet usage penalty = Adjusted safe life.

(7,777 hours TIS) – (622 hours TIS) = (7,155 hours TIS).

8. Enter the adjusted safe life (result of Step 7 above) in paragraph (e)(1) of this AD and the airplane logbook.

What if I install or remove the Marburger winglet from my airplane in the future?

If, at any time in the future, you install or remove the Marburger winglet STC from your airplane, you must repeat the procedures in this Appendix to determine the airplane's safe life.

Appendix 2

Alternative Method of Compliance (AMOC) to Docket No. FAA–2006–23646

Optional Inspection Program

For Model AT–402A airplanes, all serial numbers (S/Ns) beginning with 0952, and Model AT–402B airplanes, all S/Ns beginning with 0966, *that do not incorporate and never have incorporated Marburger winglets installed following STC No. SA00490LA*; you may begin a repetitive inspection interval program as an alternative to the safe life requirement of this AD with the following provisions:

1. Upon accumulating 1,600 hours time-in-service (TIS) or within the next 50 hours TIS after April 21, 2006 (the effective date of AD 2006–08–08), whichever occurs later, eddy-current inspect the outboard two lower spar cap bolt holes following Snow Engineering Process Specification #197, page 1, revised June 4, 2002; pages 2 through 4, dated February 23, 2001; and page 5, dated May 3, 2002. The inspection must be done by one of the following:

a. A Level 2 or Level 3 inspector that is certified for eddy-current inspection using the guidelines established by the American Society for Nondestructive Testing or MIL–STD–410; or

b. A person authorized to do AD work and who has completed and passed the Air

Tractor, Inc. training course on Eddy Current Inspection on wing lower spar caps.

2. Repeat these inspections at intervals of (as applicable):

a. 600 hours TIS:

i. Model AT–402A, S/Ns 1021 through 1124.

ii. Model AT–402B, S/Ns 1015, and 1021 through 1124.

b. 600 hours TIS:

i. Model AT–402A, S/Ns 0952 through 1020.

ii. Model AT–402B, S/Ns 0966 through 1020, except 1015.

c. 1,000 hours TIS:

i. Model AT–402A, all S/Ns beginning with 1112.

ii. Model AT–402B, all S/Ns beginning with 1125.

d. If the outboard two lower spar cap bolt holes have been cold worked following Snow Engineering Service Letter # 238 or #239, both dated September 30, 2004, then you may double the inspection intervals listed in a., b., and c. above (800 hours TIS, 1,200 hours TIS, or 2,000 hours TIS, as applicable) (See Step 8.—re: mid cycle cold work).

e. Your logbook entry must include the work done and the inspection intervals that are upcoming, as follows:

''Following AD 2006–08–08, at XXXX {insert hours TIS of the initial pre-modification inspection} hours TIS an eddy-current inspection has been performed. As of now, the safe life listed in the AD no longer applies to this airplane. This airplane must be eddy-current inspected at intervals not to exceed {400/600/800/1,000/1,200/2,000, as applicable} hours TIS. The first of these inspections is due at {insert the total number of hours TIS the first of these inspections is due} hours TIS.''

3. If at any time a crack is found, and:

a. If the crack indication goes away by doing the initial steps of the modification following the applicable sheet of Snow Engineering Co. Drawing Number 20992, then you may continue to modify your wing. After modification, proceed to Step 5.

b. If the crack indication does not go away by doing the initial steps of the modification following the applicable sheet of Snow Engineering Co. Drawing Number 20992, then you must replace all parts and hardware listed in Step 7.

c. Report to the FAA any cracks found using the form in Figure 1 of this AD.

4. Upon accumulating 4,000 hours TIS, you must:

a. Modify your center splice connection following the applicable sheet of Snow Engineering Co. Drawing Number 20992, unless already done. Before doing the modification, do an eddy-current inspection following Snow Engineering Process Specification #197, page 1, revised June 4, 2002; pages 2 through 4, dated February 23, 2001; and page 5, dated May 3, 2002. (See Step 9.). If, as of April 21, 2006 (the effective date of AD 2006–08–08), your airplane is over or within 50 hours of reaching the 4,000-hour TIS modification requirement, then you must perform the modification within 50 hours TIS.

b. Your logbook entry must include the work done and the inspection intervals that are upcoming, as follows:

''Following AD 2006–08–08, at XXXX {insert hours TIS of the modification} hours TIS an eddy-current inspection has been performed. As of now, the safe life listed in the AD no longer applies to this airplane. This airplane must be eddy-current inspected at {insert the number of hours TIS at modification plus 1,600 hours TIS} hours TIS.

5. Upon accumulating 1,600 hours TIS after modification, inspect the left-hand and right-hand outboard two lower spar cap bolt holes following Snow Engineering Process Specification #197, page 1, revised June 4, 2002; pages 2 through 4, dated February 23, 2001; and page 5, dated May 3, 2002.

6. Repetitively thereafter inspect at intervals not to exceed:

a. 1,000 hours TIS; or

b. 2,000 hours TIS if the outboard two lower spar cap bolt holes have been cold worked following Snow Engineering Service Letter #239, dated September 30, 2004 (See Step 8.).

c. Your logbook entry must include the work done and the post-modification inspection intervals that are upcoming, as follows:

''Following AD 2006–08–08, at XXXX {insert hours TIS of the initial post-modification inspection} hours TIS an eddy-current inspection has been performed. As of now, the safe life listed in the AD no longer applies to this airplane. This airplane must be eddy-current inspected at intervals not to exceed {1,000/2,000, as applicable} hours TIS. The first of these inspections is due at {insert the total number of hours TIS the first of these inspections is due} hours TIS.''

d. If at any time a crack is found, then before further flight you must replace the lower spar caps, splice blocks, and wing attach angles and hardware. You must also notify the FAA using the form in Figure 1 of this AD.

7. Upon accumulating 8,000 hours TIS, before further flight you must replace the lower spar caps, splice blocks, and wing attach angles (P/N 20693–1) and associated hardware. No additional time will be authorized for airplanes that are at or over 8,000 hours TIS (See Step 9.).

8. If you decide to cold work your bolt holes following Snow Engineering Service Letter #238 or #239, both dated September 30, 2004, at a TIS that does not coincide with a scheduled inspection following this AD, then eddy-current inspect at the time of cold working and then begin the 800/1,200/2000 hour TIS inspection intervals (2 times the intervals listed in Steps 2.a., 2.b., 2.c., and 6.a. listed above).

9. If you have modified your airplane before accumulating 4,000 hours TIS, then you may continue to fly your airplane past (modification + 4,000 hours TIS) provided you cut your inspection intervals in half. Make a logbook entry following Step 6.c. to reflect these reduced inspection intervals. Upon accumulating 8,000 hours TIS, you must comply with Step 7 above. See example:

Example: An AT–402B had the two-part modification installed at 3,000 hours TIS and the bolt holes have not been cold worked.

The first inspection would occur at 4,600 hours TIS. From Step 5, this is modification plus 1,600 hours.

Inspections would follow at 5,600 and 6,600 hours TIS. From Step 6a, this is 1,000-hour TIS inspection intervals.

There is another inspection at 7,000 hours TIS (modification plus 4,000 hours TIS). This relates to the 8,000-hour TIS inspection from Step 7, which is modification plus 4,000 hours TIS, except in this example the modification took place at 3,000 hours TIS instead of 4,000 hours TIS listed in Step 4.

This airplane may continue to fly if inspected again at 7,500 hours TIS, which is 500 hours TIS. This 500-hour time corresponds to Step 9 where you cut your inspection interval from Step 6a in half.

Upon accumulating 8,000 hours TIS (this is the same as Step 7), you must replace the parts listed in Step 7 above.

For Model AT–402A airplanes, all S/Ns beginning with 0952, and Model AT–402B airplanes, all S/Ns beginning with 0966, *that incorporate or have incorporated Marburger winglets installed following STC No. SA00490LA;* you may begin a repetitive inspection interval program as an alternative to the safe life requirement of this AD following the steps above with the following provisions:

If you *have* removed the winglets, then calculate new, reduced hours for Steps 1, 4, 5, and 7 above, as applicable, based on the winglet usage factor listed in paragraph (c)(4) and Appendix 2 of this AD.

You may repetitively inspect at the same intervals listed in Step 2 above provided that you do not re-install the winglets.

Example: An AT–402B airplane, S/N 1020, had winglets installed at 200 hours TIS and removed at 800 hours TIS.

The winglet usage factor is: 1.1.

Calculate equivalent hours: 600 hours TIS with winglets × 1.1 = 660 hours TIS.

Winglet usage penalty = 660 − 600 = 60.

New Step 1 Pre-Modification Initial Inspection time = 1,600 − 60 = 1,540 hours TIS.

Retained Step 2 Pre-Modification Inspection interval: Since the winglets are removed, the Pre-Modification Inspection interval remains at 600 hours TIS.

New Step 4 Modification time = 4,000 − 60 = 3,940 hours TIS.

New Step 5 Post-Modification Initial Inspection time = 3,940 + 1,600 = 5,540 hours TIS.

Retained Step 6 Post-Modification Inspection interval: Since the winglets are removed the Post-Modification Inspection interval remains at 1,000/2,000 hours TIS.

New Step 7 Replacement time = 8,000 − 60 = 7,940 hours TIS.

Use the Retained Step 2 interval, the New Step 5 time, and the Retained Step 6 interval to make appropriate logbook entries for the pre- and post-modification intervals, using the format presented in Steps 2.e., 4.b., and 6.c.

If you *have not* removed the winglets, then calculate new, reduced hours for Steps 1, 2, 4, 5, 6, and 7 above, as applicable, based on the winglet usage factor listed in paragraph (c)(4) and Appendix 2 of this AD.

Repetitively thereafter inspect at intervals not to exceed the appropriate interval listed

in the step above divided by the winglet usage factor.

Example: An AT–402B, S/N 1,000 has had winglets on since new.

The winglet usage factor is: 1.1.

New Step 1 Pre-Modification Initial Inspection time: 1,600 ÷ 1.1 = 1,455 hours TIS.

New Step 2 Pre-Modification Inspection interval: 600 ÷ 1.1 = 545 hours TIS.

New Step 4 Modification time: 4,000 ÷ 1.1 = 3,636 hours TIS.

New Step 5 Post-Modification Initial Inspection time: 3,636 + (1,600 ÷ 1.1) = 5,090 hours TIS.

New Step 6 Post-Modification Inspection interval: 1,000 ÷ 1.1 = 909 hours TIS.

New Step 7 Replacement time: 8,000 ÷ 1.1 = 7,273 hours TIS.

Use the reduced hours you calculate in New Step 2, New Step 5, and New Step 6 to make appropriate logbook entries for the pre- and post-modification inspection intervals, using the format presented in Steps 2.e., 4.b., and 6.c.

Issued in Kansas City, Missouri, on December 4, 2008.

Kim Smith,

Manager, Small Airplane Directorate, Aircraft Certification Service.

[FR Doc. E8–29165 Filed 12–9–08; 8:45 am]

BILLING CODE 4910–13–P

DEPARTMENT OF TRANSPORTATION

Federal Aviation Administration

14 CFR Part 39

[Docket No. FAA–2008–0645; Directorate Identifier 2007–NM–358–AD]

RIN 2120–AA64

Airworthiness Directives; Boeing Model 707 Airplanes and Model 720 and 720B Series Airplanes

AGENCY: Federal Aviation Administration (FAA), DOT.

ACTION: Supplemental notice of proposed rulemaking (NPRM); reopening of comment period.

SUMMARY: We are revising an earlier proposed airworthiness directive (AD) for all Boeing Model 707 airplanes and Model 720 and 720B series airplanes. The original NPRM would have required performing an operational test of the engine fuel suction feed of the fuel system, and other related testing if necessary. The original NPRM resulted from a report of in-service occurrences of loss of fuel system suction feed capability, followed by total loss of pressure of the fuel feed system. This action revises the original NPRM by reducing the compliance time for low-utilization airplanes, and including corrective actions that were inadvertently omitted from certain sections. The corrective actions are replacing the o-rings if any leakage is found in the couplings, and replacing the fuel line if any leakage is found in the fuel line. We are proposing this supplemental NPRM to detect and correct failure of the engine fuel suction feed capability of the fuel system, which could result in multi-engine flameout, inability to restart the engines, and consequent forced landing of the airplane.

DATES: We must receive comments on this supplemental NPRM by January 5, 2009.

ADDRESSES: You may send comments by any of the following methods:

- *Federal eRulemaking Portal:* Go to *http://www.regulations.gov.* Follow the instructions for submitting comments.
- *Fax:* 202–493–2251.
- *Mail:* U.S. Department of Transportation, Docket Operations, M–30, West Building Ground Floor, Room W12–140, 1200 New Jersey Avenue SE., Washington, DC 20590.
- *Hand Delivery:* U.S. Department of Transportation, Docket Operations, M–30, West Building Ground Floor, Room W12–140, 1200 New Jersey Avenue SE., Washington, DC 20590, between 9 a.m. and 5 p.m., Monday through Friday, except Federal holidays.

For service information identified in this AD, contact Boeing Commercial Airplanes, Attention: Data & Services Management, P. O. Box 3707, MC 2H–65, Seattle, Washington 98124–2207; telephone 206–544–5000, extension 1, fax 206–766–5680; e-mail *me.boecom@boeing.com;* Internet *https://www.myboeingfleet.com.* You may review copies of the referenced service information at the FAA, Transport Airplane Directorate, 1601 Lind Avenue SW., Renton, Washington. For information on the availability of this material at the FAA, call 425–227–1221 or 425–227–1152.

Examining the AD Docket

You may examine the AD docket on the Internet at *http://www.regulations.gov;* or in person at the Docket Management Facility between 9 a.m. and 5 p.m., Monday through Friday, except Federal holidays. The AD docket contains this proposed AD, the regulatory evaluation, any comments received, and other information. The street address for the Docket Office (telephone 800–647–5527) is in the **ADDRESSES** section. Comments will be available in the AD docket shortly after receipt.

FOR FURTHER INFORMATION CONTACT: Sue Lucier, Aerospace Engineer, Propulsion Branch, ANM–140S, FAA, Seattle Aircraft Certification Office, 1601 Lind Avenue SW., Renton, Washington 98057–3356; telephone (425) 917–6438; fax (425) 917–6590.

SUPPLEMENTARY INFORMATION:

Comments Invited

We invite you to send any written relevant data, views, or arguments about this proposed AD. Send your comments to an address listed under the **ADDRESSES** section. Include ''Docket No. FAA–2008–0645; Directorate Identifier 2007–NM–358–AD'' at the beginning of your comments. We specifically invite comments on the overall regulatory, economic, environmental, and energy aspects of this proposed AD. We will consider all comments received by the closing date and may amend this proposed AD because of those comments.

We will post all comments we receive, without change, to *http://www.regulations.gov,* including any personal information you provide. We will also post a report summarizing each substantive verbal contact we receive about this proposed AD.

Discussion

We issued a notice of proposed rulemaking (NPRM) (the ''original NPRM'') to amend 14 CFR part 39 to include an airworthiness directive (AD) that would apply to all Boeing Model 707 airplanes and Model 720 and 720B series airplanes. That original NPRM was published in the **Federal Register** on June 20, 2008 (73 FR 35092). That original NPRM proposed to require performing an operational test of the engine fuel suction feed of the fuel system, and other related testing if necessary.

Actions Since Original NPRM was Issued

Since we issued the original NPRM, we have learned that corrective actions were inadvertently omitted from the Summary section and paragraph (f) of the original NPRM. The corrective actions were identified in the relevant service information section of the original NPRM and include replacing the o-rings if any leakage is found in the couplings, and replacing the fuel line if any leakage is found in the fuel line.

Comments

We gave the public the opportunity to participate in developing this AD. We considered the comments received from a single commenter.

Request To Change Repetitive Test Interval for Low-Utilization Airplanes

Boeing asks that we add a maximum time interval of 3 years to the current 6,000-flight-hour repetitive test interval specified in paragraph (f) of the original NPRM. Boeing states that low-utilization airplanes may not meet the 6,000-flight-hour threshold for several years.

We agree to change the repetitive test interval. The data provided by the manufacturer justify a change to the repetitive test interval currently specified in the original NPRM to acknowledge that elapsed calendar time, as well as operational time, can affect suction feed capability. We have determined that changing the intervals in terms of calendar and operational time, as recommended by the manufacturer, will ensure an adequate level of safety for the affected fleet. We have changed the compliance time for the repetitive operational tests specified in paragraph (f) of this supplemental NPRM as requested.

Request To Clarify Reason for the Unsafe Condition

Boeing asks that we clarify the description of in-service occurrences of loss of fuel system suction feed capability specified in the original NPRM, which states that the proposed AD results from reports of two in-service engine flameout events operating on suction feed with undetected air leak failures. Boeing notes that there are no known reports of any engine flameout-related events in the Model 707 airplane fleet. Boeing recognizes that undetected air leaks could exist, and the maintenance procedure is a proactive measure to ensure engine flameout will not occur due to air leaks while on suction feed operation. Boeing is unclear as to the incidents in question and only through further investigation discovered that the engine suction feed incidents did not occur within the Model 707 airplane fleet. Boeing asks that we clarify the Summary, Discussion, and Unsafe Condition sections, and ''FAA's Determination and Requirements of this Proposed AD.''

We agree that the Summary and Discussion sections and ''FAA's Determination and Requirements of this Proposed AD'' could be clarified in the supplemental NPRM as Boeing requests. The inaccurate language which was contained in the original NPRM is not restated in the supplemental NPRM. Therefore, no change to the supplemental NPRM is necessary in this regard.

Request To Clarify the Requirement for Additional Testing

Boeing asks that we clarify the requirement for additional testing of the engine fuel feed manifold specified in the Summary section. Boeing states that this requirement would be better described as performing corrective action in case the engine suction feed operational test is not successful. Boeing asks that we change the second sentence in the Summary section as follows: ''This proposed AD would require performing an operational test of the engine fuel suction feed of the fuel system. If necessary, corrective actions may be required, before further flight.''

We agree with the request to clarify the requirement for additional testing of the engine fuel feed manifold. As specified under ''Actions Since Original NPRM was Issued,'' we have added the corrective action language that was not included in the original NPRM to this supplemental NPRM.

Request To Allow Later Revisions of the Referenced Service Bulletin

Boeing asks that we revise the original NPRM to allow further revisions to the Boeing Alert Service Bulletin A3527, dated November 7, 2007 (referenced in the original NPRM as the source of service information for accomplishing the specified actions). Boeing states that the service bulletin may be revised over time which would require frequent requests for alternative methods of compliance (AMOC).

We do not agree with the request. This supplemental NPRM must be consistent with FAA policy and Office of the Federal Register regulations, which do not allow references to the use of ''later revisions'' of the applicable service information in ADs. Therefore, no change to the supplemental NPRM is necessary in this regard.

FAA's Determination and Proposed Requirements of the Supplemental NPRM

We are proposing this supplemental NPRM because we evaluated all pertinent information and determined an unsafe condition exists and is likely to exist or develop on other products of the same type design. Certain changes described above expand the scope of the original NPRM. As a result, we have determined that it is necessary to reopen the comment period to provide additional opportunity for the public to comment on this supplemental NPRM.

Costs of Compliance

We estimate that this proposed AD would affect 21 airplanes of U.S. registry. We also estimate that it would take 1 work-hour per product, per test, to comply with this proposed AD. The average labor rate is $80 per work-hour. Based on these figures, we estimate the cost of this proposed AD to the U.S. operators to be $1,680, or $80 per product, per test.

Authority for This Rulemaking

Title 49 of the United States Code specifies the FAA's authority to issue rules on aviation safety. Subtitle I, section 106, describes the authority of the FAA Administrator. ''Subtitle VII: Aviation Programs,'' describes in more detail the scope of the Agency's authority.

We are issuing this rulemaking under the authority described in ''Subtitle VII, Part A, Subpart III, Section 44701: General requirements.'' Under that section, Congress charges the FAA with promoting safe flight of civil aircraft in air commerce by prescribing regulations for practices, methods, and procedures the Administrator finds necessary for safety in air commerce. This regulation is within the scope of that authority because it addresses an unsafe condition that is likely to exist or develop on products identified in this rulemaking action.

Regulatory Findings

We determined that this proposed AD would not have federalism implications under Executive Order 13132. This proposed AD would not have a substantial direct effect on the States, on the relationship between the national Government and the States, or on the distribution of power and responsibilities among the various levels of government.

For the reasons discussed above, I certify this proposed regulation:

1. Is not a ''significant regulatory action'' under Executive Order 12866,

2. Is not a ''significant rule'' under the DOT Regulatory Policies and Procedures (44 FR 11034, February 26, 1979), and

3. Will not have a significant economic impact, positive or negative, on a substantial number of small entities under the criteria of the Regulatory Flexibility Act.

You can find our regulatory evaluation and the estimated costs of compliance in the AD Docket.

List of Subjects in 14 CFR Part 39

Air transportation, Aircraft, Aviation safety, Incorporation by reference, Safety.

The Proposed Amendment

Accordingly, under the authority delegated to me by the Administrator,

the FAA proposes to amend 14 CFR part 39 as follows:

PART 39—AIRWORTHINESS DIRECTIVES

1. The authority citation for part 39 continues to read as follows:

Authority: 49 U.S.C. 106(g), 40113, 44701.

§ 39.13 [Amended]

2. The FAA amends § 39.13 by adding the following new AD:

Boeing: Docket No. FAA–2008–0645; Directorate Identifier 2007–NM–358–AD.

Comments Due Date

(a) We must receive comments by January 5, 2009.

Affected ADs

(b) None.

Applicability

(c) This AD applies to all Boeing Model 707–100 long body, –200, –100B long body, and –100B short body series airplanes; and Model 707–300, –300B, –300C, and –400 series airplanes; and Model 720 and 720B series airplanes; certificated in any category.

Unsafe Condition

(d) This AD results from a report of in-service occurrences of loss of fuel system suction feed capability, followed by total loss of pressure of the fuel feed system. We are issuing this AD to detect and correct failure of the engine fuel suction feed of the fuel system, which could result in multi-engine flameout, inability to restart the engines, and consequent forced landing of the airplane.

Compliance

(e) Comply with this AD within the compliance times specified, unless already done.

Operational Test/Other Specified and Corrective Actions

(f) Within 18 months after the effective date of this AD: Perform an operational test of the engine fuel suction feed of the fuel system, and perform all other related testing and corrective actions, as applicable, before further flight, in accordance with the Accomplishment Instructions of Boeing Alert Service Bulletin A3527, dated November 7, 2007. Repeat the operational test thereafter at intervals not to exceed 6,000 flight hours or 36 months, whichever occurs first.

Alternative Methods of Compliance (AMOCs)

(g)(1) The Manager, Seattle Aircraft Certification Office (ACO), FAA, ATTN: Sue Lucier, Aerospace Engineer, Propulsion Branch, ANM–140S, FAA, Seattle ACO, 1601 Lind Avenue SW., Renton, Washington 98057–3356; telephone (425) 917–6438; fax (425) 917–6590, has the authority to approve AMOCs for this AD, if requested using the procedures found in 14 CFR 39.19.

(2) To request a different method of compliance or a different compliance time for this AD, follow the procedures in 14 CFR 39.19. Before using any approved AMOC on any airplane to which the AMOC applies, notify your appropriate principal inspector (PI) in the FAA Flight Standards District Office (FSDO), or lacking a PI, your local FSDO.

Issued in Renton, Washington, on November 28, 2008.

Ali Bahrami,

Manager, Transport Airplane Directorate, Aircraft Certification Service.

[FR Doc. E8–29257 Filed 12–9–08; 8:45 am]

BILLING CODE 4910–13–P

DEPARTMENT OF TRANSPORTATION

Federal Aviation Administration

14 CFR Part 39

[Docket No. FAA–2008–0646; Directorate Identifier 2007–NM–359–AD]

RIN 2120–AA64

Airworthiness Directives; Boeing Model 727 Airplanes

AGENCY: Federal Aviation Administration (FAA), DOT.

ACTION: Supplemental notice of proposed rulemaking (NPRM); reopening of comment period.

SUMMARY: We are revising an earlier proposed airworthiness directive (AD) for certain Boeing Model 727 airplanes. The original NPRM would have required performing an operational test of the engine fuel suction feed of the fuel system, and other related testing if necessary. The original NPRM resulted from a report of in-service occurrences of loss of fuel system suction feed capability, followed by total loss of pressure of the fuel feed system. This action revises the original NPRM by reducing the compliance time for low-utilization airplanes and including corrective actions that were inadvertently omitted from certain sections. The corrective actions are inspecting and repairing or replacing any leaking Gamah fittings with new fittings, and inspecting and repairing any major welded tube assemblies that are leaking. We are proposing this supplemental NPRM to detect and correct failure of the engine fuel suction feed capability of the fuel system, which could result in multi-engine flameout, inability to restart the engines, and consequent forced landing of the airplane.

DATES: We must receive comments on this supplemental NPRM by January 5, 2009.

ADDRESSES: You may send comments by any of the following methods:

- *Federal eRulemaking Portal:* Go to *http://www.regulations.gov.* Follow the instructions for submitting comments.
- *Fax:* 202–493–2251.
- *Mail:* U.S. Department of Transportation, Docket Operations, M–30, West Building Ground Floor, Room W12–140, 1200 New Jersey Avenue, SE., Washington, DC 20590.
- *Hand Delivery:* U.S. Department of Transportation, Docket Operations, M–30, West Building Ground Floor, Room W12–140, 1200 New Jersey Avenue SE., Washington, DC 20590, between 9 a.m. and 5 p.m., Monday through Friday, except Federal holidays.

For service information identified in this AD, contact Boeing Commercial Airplanes, Attention: Data & Services Management, P. O. Box 3707, MC 2H–65, Seattle, Washington 98124–2207; telephone 206–544–5000, extension 1, fax 206–766–5680; e-mail *me.boecom@boeing.com;* Internet *https://www.myboeingfleet.com.* You may review copies of the referenced service information at the FAA, Transport Airplane Directorate, 1601 Lind Avenue, SW., Renton, Washington. For information on the availability of this material at the FAA, call 425–227–1221 or 425–227–1152.

Examining the AD Docket

You may examine the AD docket on the Internet at *http://www.regulations.gov;* or in person at the Docket Management Facility between 9 a.m. and 5 p.m., Monday through Friday, except Federal holidays. The AD docket contains this proposed AD, the regulatory evaluation, any comments received, and other information. The street address for the Docket Office (telephone 800–647–5527) is in the **ADDRESSES** section. Comments will be available in the AD docket shortly after receipt.

FOR FURTHER INFORMATION CONTACT: Sue Lucier, Aerospace Engineer, Propulsion Branch, ANM–140S, FAA, Seattle Aircraft Certification Office, 1601 Lind Avenue SW., Renton, Washington 98057–3356; telephone (425) 917–6438; fax (425) 917–6590.

SUPPLEMENTARY INFORMATION:

Comments Invited

We invite you to send any written relevant data, views, or arguments about this proposed AD. Send your comments to an address listed under the **ADDRESSES** section. Include ''Docket No. FAA–2008–0646; Directorate Identifier 2007–NM–359–AD'' at the beginning of your comments. We specifically invite comments on the overall regulatory, economic, environmental, and energy

aspects of this proposed AD. We will consider all comments received by the closing date and may amend this proposed AD because of those comments.

We will post all comments we receive, without change, to *http://www.regulations.gov,* including any personal information you provide. We will also post a report summarizing each substantive verbal contact we receive about this proposed AD.

Discussion

We issued a notice of proposed rulemaking (NPRM) (the ''original NPRM'') to amend 14 CFR part 39 to include an airworthiness directive (AD) that would apply to certain Boeing Model 727 airplanes. That original NPRM was published in the **Federal Register** on June 20, 2008 (73 FR 35093). That original NPRM proposed to require performing an operational test of the engine fuel suction feed of the fuel system, and other related testing if necessary.

Actions Since Original NPRM was Issued

Since we issued the original NPRM, we have learned that corrective actions were inadvertently omitted from the Summary section and paragraph (f) of the original NPRM. The corrective actions were identified in the relevant service information section of the original NPRM and include inspecting and repairing or replacing any leaking Gamah fittings with new fittings, and inspecting and repairing any major welded tube assemblies that are leaking.

Comments

We gave the public the opportunity to participate in developing this AD. We considered the comment received from a single commenter.

Request To Change Test Interval for Low-Utilization Airplanes

Boeing asks that we add a maximum time interval of 3 years to the current 7,000-flight-hour repetitive test interval specified in paragraph (f) of the original NPRM. Boeing states that low-utilization airplanes may not meet the 7,000-flight-hour threshold for several years.

We agree to change the compliance time for repetitive tests. We have determined that the compliance time for the initial test should also be changed based on the data received from the manufacturer. The data provided by the manufacturer also justify a change to the repetitive test interval currently specified in the original NPRM to acknowledge that elapsed calendar time, as well as operational time, can affect suction feed capability. We have determined that changing the intervals in terms of calendar and operational time, as recommended by the manufacturer, will ensure an adequate level of safety for the affected fleet. We have changed the compliance time for the initial operational test specified in paragraph (f) of this supplemental NPRM as requested.

Request To Clarify Reason for the Unsafe Condition

Boeing asks that we clarify the description of in-service occurrences of loss of fuel system suction feed capability specified in the original NPRM, which states that the proposed AD results from reports of two in-service engine flameout events operating on suction feed with undetected air leak failures. Boeing notes that there are no known reports of any engine flameout-related events in the Model 727 airplane fleet. Boeing recognizes that undetected air leaks could exist, and the maintenance procedure is a proactive measure to ensure engine flameout will not occur due to air leaks while on suction feed operation. Boeing is unclear as to the incidents in question and only through further investigation discovered that the engine suction feed incidents did not occur within the Model 727 airplane fleet. Boeing asks that we clarify the Summary, Discussion, and Unsafe Condition sections, and ''FAA's Determination and Requirements of this Proposed AD.''

We agree that the Summary and Discussion sections and ''FAA's Determination and Requirements of this Proposed AD'' could be clarified in the supplemental NPRM as Boeing requests. The inaccurate language which was contained in the original NPRM is not restated in the supplemental NPRM. Therefore, no change to the supplemental NPRM is necessary in this regard.

Request To Clarify the Requirement for Additional Testing

Boeing asks that we clarify the requirement for additional testing of the engine fuel feed manifold specified in the Summary section. Boeing states that this requirement would be better described as performing corrective action in case the engine suction feed operational test is not successful. Boeing asks that we change the second sentence in the Summary section as follows: ''This proposed AD would require performing an operational test of the engine fuel suction feed of the fuel system. If necessary, corrective actions may be required, before further flight.''

We agree with the request to clarify the requirement for additional testing of the engine fuel feed manifold. As specified under ''Actions Since Original NPRM was Issued,'' we have added the corrective action language that was not included in the original NPRM to this supplemental NPRM.

Request To Allow Later Revisions of the Referenced Service Bulletin

Boeing asks that we revise the original NPRM to allow further revisions to the Boeing Service Bulletin 727–28–80, dated June 21, 1985 (referenced in the original NPRM as the source of service information for accomplishing the specified actions). Boeing states that the service bulletin may be revised over time which would require frequent requests for alternative methods of compliance (AMOC).

We do not agree with the request. This supplemental NPRM must be consistent with FAA policy and Office of the **Federal Register** regulations, which do not allow references to the use of ''later revisions'' of the applicable service information in ADs. Therefore, no change to the supplemental NPRM is necessary in this regard.

FAA's Determination and Proposed Requirements of the Supplemental NPRM

We are proposing this supplemental NPRM because we evaluated all pertinent information and determined an unsafe condition exists and is likely to exist or develop on other products of the same type design. Certain changes described above expand the scope of the original NPRM. As a result, we have determined that it is necessary to reopen the comment period to provide additional opportunity for the public to comment on this supplemental NPRM.

Costs of Compliance

We estimate that this proposed AD would affect 709 airplanes of U.S. registry. We also estimate that it would take 1 work-hour per product, per test, to comply with this proposed AD. The average labor rate is $80 per work-hour. Based on these figures, we estimate the cost of this proposed AD to the U.S. operators to be $56,720, or $80 per product, per test.

Authority for This Rulemaking

Title 49 of the United States Code specifies the FAA's authority to issue rules on aviation safety. Subtitle I, section 106, describes the authority of the FAA Administrator. ''Subtitle VII: Aviation Programs,'' describes in more

detail the scope of the Agency's authority.

We are issuing this rulemaking under the authority described in ''Subtitle VII, Part A, Subpart III, section 44701: General requirements.'' Under that section, Congress charges the FAA with promoting safe flight of civil aircraft in air commerce by prescribing regulations for practices, methods, and procedures the Administrator finds necessary for safety in air commerce. This regulation is within the scope of that authority because it addresses an unsafe condition that is likely to exist or develop on products identified in this rulemaking action.

Regulatory Findings

We determined that this proposed AD would not have federalism implications under Executive Order 13132. This proposed AD would not have a substantial direct effect on the States, on the relationship between the national Government and the States, or on the distribution of power and responsibilities among the various levels of government.

For the reasons discussed above, I certify this proposed regulation:

1. Is not a ''significant regulatory action'' under Executive Order 12866,

2. Is not a ''significant rule'' under the DOT Regulatory Policies and Procedures (44 FR 11034, February 26, 1979), and

3. Will not have a significant economic impact, positive or negative, on a substantial number of small entities under the criteria of the Regulatory Flexibility Act.

You can find our regulatory evaluation and the estimated costs of compliance in the AD Docket.

List of Subjects in 14 CFR Part 39

Air transportation, Aircraft, Aviation safety, Incorporation by reference, Safety.

The Proposed Amendment

Accordingly, under the authority delegated to me by the Administrator, the FAA proposes to amend 14 CFR part 39 as follows:

PART 39—AIRWORTHINESS DIRECTIVES

1. The authority citation for part 39 continues to read as follows:

Authority: 49 U.S.C. 106(g), 40113, 44701.

§ 39.13 [Amended]

2. The FAA amends § 39.13 by adding the following new AD:

Boeing: Docket No. FAA–2008–0646; Directorate Identifier 2007–NM–359–AD.

Comments Due Date

(a) We must receive comments by January 5, 2009.

Affected ADs

(b) None.

Applicability

(c) This AD applies to Boeing Model 727, 727C, 727–100, 727–100C, 727–200, and 727–200F series airplanes, certificated in any category.

Unsafe Condition

(d) This AD results from a report of in-service occurrences of loss of fuel system suction feed capability, followed by total loss of pressure of the fuel feed system. We are issuing this AD to detect and correct failure of the engine fuel suction feed of the fuel system, which could result in multi-engine flameout, inability to restart the engines, and consequent forced landing of the airplane.

Compliance

(e) Comply with this AD within the compliance times specified, unless already done.

Operational Test/Other Specified Actions

(f) Within 7,000 flight hours or 18 months after the effective date of this AD, whichever occurs first: Perform an operational test of the engine fuel suction feed of the fuel system, and perform all other related testing and corrective actions, as applicable, before further flight, in accordance with the Accomplishment Instructions of Boeing Service Bulletin 727–28–80, dated June 21, 1985. Repeat the operational test thereafter at intervals not to exceed 7,000 flight hours or 36 months, whichever occurs first.

Operator's Equivalent Procedure

(g) If any discrepancy is found, and Boeing Service Bulletin 727–28–80, dated June 21, 1985, specifies that certain actions (i.e., a vacuum test of the fuel feed system) may be accomplished using an operator's ''equivalent procedure'' (with substitute test equipment): The actions must be accomplished in accordance with Figure 4 of the service bulletin.

Alternative Methods of Compliance (AMOCs)

(h)(1) The Manager, Seattle Aircraft Certification Office (ACO), FAA, ATTN: Sue Lucier, Aerospace Engineer, Propulsion Branch, ANM–140S, FAA, Seattle ACO, 1601 Lind Avenue, SW., Renton, Washington 98057–3356; telephone (425) 917–6438; fax (425) 917–6590, has the authority to approve AMOCs for this AD, if requested using the procedures found in 14 CFR 39.19.

(2) To request a different method of compliance or a different compliance time for this AD, follow the procedures in 14 CFR 39.19. Before using any approved AMOC on any airplane to which the AMOC applies, notify your appropriate principal inspector (PI) in the FAA Flight Standards District Office (FSDO), or lacking a PI, your local FSDO.

Issued in Renton, Washington, on November 28, 2008.

Ali Bahrami,

Manager, Transport Airplane Directorate, Aircraft Certification Service.

[FR Doc. E8–29256 Filed 12–9–08; 8:45 am]

BILLING CODE 4910–13–P

DEPARTMENT OF TRANSPORTATION

Federal Aviation Administration

14 CFR Part 71

[Docket No. FAA–2008–0897; Airspace Docket No. 08–AWP–9]

RIN 2120–AA66

Proposed Amendment of Class E Airspace; Guam Island, GU and Saipan Island, CQ

AGENCY: Federal Aviation Administration (FAA), DOT.

ACTION: Notice of proposed rulemaking (NPRM).

SUMMARY: This action proposes to remove, rename and expand the Class E airspace areas serving Guam International Airport, Anderson AFB and Saipan Island. Additionally, this proposed action would revoke the Saipan Island Class E surface area since it is no longer required, and expand other controlled airspace areas to protect aircraft conducting instrument approaches to Saipan International Airport. The FAA is proposing these actions to enhance the safety and management of aircraft operations in the vicinity of the Northern Mariana Islands.

DATES: Comments must be received on or before January 26, 2009.

ADDRESSES: Send comments on this proposal to the U.S. Department of Transportation, Docket Operations, M–30, 1200 New Jersey Avenue, SE., West Building Ground Floor, Room W12–140, Washington, DC 20590–0001; telephone: (202) 366–9826. You must identify FAA Docket No. FAA–2008–0897 and Airspace Docket No. 08–AWP–9 at the beginning of your comments. You may also submit comments through the Internet at *http://www.regulations.gov.*

FOR FURTHER INFORMATION CONTACT: Ken McElroy, Airspace and Rules Group, Office of System Operations Airspace and AIM, Federal Aviation Administration, 800 Independence Avenue, SW., Washington, DC 20591; telephone: (202) 267–8783.

SUPPLEMENTARY INFORMATION:

Comments Invited

Interested parties are invited to participate in this proposed rulemaking by submitting such written data, views, or arguments, as they may desire. Comments that provide the factual basis supporting the views and suggestions presented are particularly helpful in developing reasoned regulatory decisions on the proposal. Comments are specifically invited on the overall regulatory, aeronautical, economic, environmental, and energy-related aspects of the proposal.

Communications should identify both docket numbers (FAA Docket No. FAA–2008–0897 and Airspace Docket No. 08–AWP–9) and be submitted in triplicate to the Docket Management Facility (see **ADDRESSES** section for address and phone number). You may also submit comments through the Internet at *http://www.regulations.gov.*

Commenters wishing the FAA to acknowledge receipt of their comments on this action must submit with those comments a self-addressed, stamped postcard on which the following statement is made: ''Comments to FAA Docket No. FAA–2008–0897 and Airspace Docket No. 08–AWP–9.'' The postcard will be date/time stamped and returned to the commenter.

All communications received on or before the specified closing date for comments will be considered before taking action on the proposed rule. The proposal contained in this action may be changed in light of comments received. All comments submitted will be available for examination in the public docket both before and after the closing date for comments. A report summarizing each substantive public contact with FAA personnel concerned with this rulemaking will be filed in the docket.

Availability of NPRMs

An electronic copy of this document may be downloaded through the Internet at *http://www.regulations.gov.* Recently published rulemaking documents can also be accessed through the FAA's Web page at *http://www.faa.gov/airports_airtraffic/air_traffic/publications/airspace_amendments/.*

You may review the public docket containing the proposal, any comments received and any final disposition in person in the Dockets Office (see **ADDRESSES** section for address and phone number) between 9 a.m. and 5 p.m., Monday through Friday, except Federal holidays. An informal docket may also be examined during normal business hours at the Northwest Mountain Regional Office of the Federal Aviation Administration, Air Traffic Organization, Western Service Area, System Support Group, 1601 Lind Avenue, SW., Renton, WA 98057.

Persons interested in being placed on a mailing list for future NPRMs should contact the FAA's Office of Rulemaking, (202) 267–9677, for a copy of Advisory Circular No. 11–2A, Notice of Proposed Rulemaking Distribution System, which describes the application procedure.

Background

During an airspace review conducted by Guam ARTCC personnel, it was determined that the Class E airspace descriptions were outdated and required revision to contain current instrument operations within controlled airspace.

The Proposal

The FAA is proposing an amendment to Title 14 Code of Federal Regulations (14 CFR) part 71 to amend Class E airspace at Guam, and Saipan Islands. This proposed action would remove the Saipan Island Class E surface area airspace since it is no longer required for operations and expand other controlled airspace for the safety of aircraft conducting instrument approaches to Saipan International Airport. In addition, this action would remove, rename and expand the Class E airspace areas serving Guam International Airport, and Anderson AFB, and rename the Guam Island Class E airspace to the Northern Mariana Islands Class E airspace. Controlled airspace is necessary to accommodate Instrument Flight Rules aircraft operations. This action would enhance the safety and management of aircraft operations in the Northern Mariana Islands.

Class E airspace designations are published in paragraph 6000 of FAA Order 7400.9S, signed October 3, 2008, and effective October 31, 2008, which is incorporated by reference in 14 CFR 71.1. The Class E airspace designation listed in this document will be published subsequently in this Order.

The FAA has determined that this proposed regulation only involves an established body of technical regulations for which frequent and routine amendments are necessary to keep them operationally current. Therefore, this proposed regulation: (1) Is not a ''significant regulatory action'' under Executive Order 12866; (2) is not a ''significant rule'' under Department of Transportation (DOT) Regulatory Policies and Procedures (44 FR 11034; February 26, 1979); and (3) does not warrant preparation of a regulatory evaluation as the anticipated impact is so minimal. Since this is a routine matter that will only affect air traffic procedures and air navigation, it is certified that this proposed rule, when promulgated, will not have a significant economic impact on a substantial number of small entities under the criteria of the Regulatory Flexibility Act.

The FAA's authority to issue rules regarding aviation safety is found in Title 49 of the United States Code. Subtitle I, Section 106 describes the authority of the FAA Administrator. Subtitle VII, Aviation Programs, describes in more detail the scope of the agency's authority.

This rulemaking is promulgated under the authority described in Subtitle VII, Part A, Subpart I, Section 40103. Under that section, the FAA is charged with prescribing regulations to assign the use of the airspace necessary to ensure the safety of aircraft and the efficient use of airspace. This regulation is within the scope of that authority as it establishes controlled airspace at Guam and Saipan Islands.

ICAO Considerations

As part of this proposal relates to navigable airspace outside the United States, this notice is submitted in accordance with the International Civil Aviation Organization (ICAO) International Standards and Recommended Practices. Applicability of International Standards and Recommended Practices by the Air Traffic Rules and Procedures Service, FAA, in areas outside domestic airspace of the United States is governed by Article 12 of, and Annex 11 to, the Convention on International Civil Aviation, which pertains to the establishment of air navigational facilities and services necessary to promote the safe, orderly, and expeditious flow of civil air traffic. Their purpose is to ensure that civil aircraft operations on international air routes are carried out under uniform conditions designed to improve the safety and efficiency of air operations.

The International Standards and Recommended Practices in Annex 11 apply in those parts of the airspace under the jurisdiction of a contracting state, derived from ICAO, wherein air traffic services are provided and also whenever a contracting state accepts the responsibility of providing air traffic services over high seas or in airspace of undetermined sovereignty. A contracting state accepting such responsibility may apply the International Standards and Recommended Practices in a manner consistent with that adopted for airspace under its domestic jurisdiction.

In accordance with Article 3 of the Convention on International Civil Aviation, Chicago, 1944, state aircraft are exempt from the provisions of Annex 11 and its Standards and Recommended Practices. As a contracting state, the United States agreed by Article 3(d) that its state aircraft will be operated in international airspace with due regard for the safety of civil aircraft.

Since this action involves, in part, the designation of navigable airspace outside the United States, the Administrator is consulting with the Secretary of State and the Secretary of Defense in accordance with the provisions of Executive Order 10854.

Environmental Review

The FAA has determined that this action qualifies for categorical exclusion under the National Environmental Policy Act in accordance with FAA Order 1050.1E, paragraph 311a Environmental Impacts: Polices and Procedures. This airspace action is not expected to cause any potentially significant environmental impacts, and no extraordinary circumstances exist that warrant preparation of an environmental assessment.

List of Subjects in 14 CFR Part 71

Airspace, Incorporation by reference, Navigation (air).

The Proposed Amendment

In consideration of the foregoing, the Federal Aviation Administration proposes to amend 14 CFR part 71 as follows:

PART 71—DESIGNATION OF CLASS A, B, C, D, AND E AIRSPACE AREAS; AIR TRAFFIC SERVICE ROUTES; AND REPORTING POINTS

1. The authority citation for part 71 continues to read as follows:

Authority: 49 U.S.C. 106(g), 40103, 40113, 40120; E.O. 10854, 24 FR 9565, 3 CFR, 1959–1963 Comp., p.389.

§ 71.1 [Amended]

2. The incorporation by reference in 14 CFR 71.1 of FAA Order 7400.9S, Airspace Designations and Reporting Points, signed October 3, 2008, and effective October 31, 2008, is amended as follows:

Paragraph 6002 Class E Airspace Areas Designated as an Extension to a Class D Surface Area.

* * * * *

AWP CQ E2 Saipan Island, CQ [Removed]

* * * * *

Paragraph 6004 Class E Airspace Areas Designated as Extensions to Surface Areas.

AWP CQ E4 Saipan Island, CQ [Amended]

Saipan International Airport, CQ
(Lat. 15°07′08″ N, Long. 145°43′46″ E)
Saipan NDB
(Lat. 15°06′41″ N, Long. 145°42′37″ E)

That airspace extending upward from the surface within a 4.3 mile radius of Saipan International Airport and within 3 miles north and 2-miles south of the Saipan NDB 248° bearing, extending from the 4.3 mile radius to 8.5-miles southwest of the NDB and within 3 miles each side of the Saipan NDB 068° bearing extending from the 4.3 mile radius to 9 miles northeast of the NDB.

* * * * *

AWP GU E4 Guam Island, Agana NAS, GU [Removed]

* * * * *

AWP GU E4 Guam International Airport, GU [New]

Tiyan, Guam International Airport, GU
(Lat. 13°29′02″ N, Long. 144°47′50″ E)
Nimitz VORTAC
(Lat. 13°27′16″ N, Long. 144°44′00″ E)

That airspace extending upward from the surface within 2 miles each side of the Nimitz VORTAC 245° radial, extending from the 4.3 mile radius of Guam International Airport to 5 miles southwest of the Nimitz VORTAC.

* * * * *

AWP GU E4 Guam Island, GU [Removed]

* * * * *

AWP GU E4 Anderson AFB, GU [New]

Yigo, Andersen AFB, GU
(Lat. 13°35′02″ N, Long. 144°55′48″ E)
Tiyan, Guam International Airport, GU
(Lat. 13°29′02″ N, Long. 144°47′50″ E)

That airspace extending upward from the surface within 3 miles each side of the 065° bearing from Andersen AFB extending from the 4.3-mile radius of Andersen AFB to 8.5 miles northeast and that airspace within 2 miles north of and 3.5 miles south of the 245° bearing from Andersen AFB, extending from the 4.3-mile radius of the airport to 7.5 miles southwest of Andersen AFB, excluding the Guam International Airport Class D airspace area.

* * * * *

Paragraph 6005 Class E Airspace Areas Designated Extending Upward from 700 feet or More Above the Surface of the Earth.

* * * * *

AWP GU E5 Guam Island, GU [Removed]

* * * * *

AWP NMI E5 Northern Mariana Islands, NMI [New]

Yigo, Andersen AFB, GU
(Lat. 13°35′02″ N, Long. 144°55′48″ E)
Rota International Airport, CQ
(Lat. 14°10′28″ N, Long. 145°14′28″ E)
Saipan International Airport, CQ
(Lat. 15°07′08″ N, Long. 145°43′46″ E)
Tinian International Airport, CQ
(Lat. 14°59′57″ N, Long. 145°37′10″ E)
Nimitz VORTAC
(Lat. 13°27′16″ N, Long. 144°44′00″ E)
Saipan NDB
(Lat. 15°06′41″ N, Long. 145°42′37″ E)

That airspace extending upward from 700 feet above the surface within a 12 mile radius of Andersen AFB and within 12 miles each side of the 245° bearing from Andersen AFB extending from the 12-mile radius to 35 miles southwest of Andersen AFB and within an 8 mile radius of Rota International Airport, and within a 12 mile radius of Saipan International Airport and within a 7 mile radius of Tinian International Airport. That airspace extending upward from 1,200 feet above the surface within a 100-mile radius of the Nimitz VORTAC and within a 35 mile radius of the Saipan NDB, excluding the portion that coincides with W–517.

* * * * *

Issued in Washington DC on November 25, 2008.

Edith V. Parish,

Manager, Airspace and Rules Group.

[FR Doc. E8–29255 Filed 12–9–08; 8:45 am]

BILLING CODE 4910–13–P

DEPARTMENT OF TRANSPORTATION

Federal Aviation Administration

14 CFR Part 71

[Docket No. FAA–2008–0940; Airspace Docket No. 08–AAL–25]

Proposed Removal and Modification of VOR Federal Airways; Alaska

AGENCY: Federal Aviation Administration (FAA), DOT.

ACTION: Notice of proposed rulemaking (NPRM).

SUMMARY: This action proposes to remove Federal Airway V–328, and modify three Federal Airways, V–319, V–333 and V–480, in Alaska. The FAA is proposing this action in preparation of the eventual decommissioning from the National Airspace System (NAS) of the Kipnuk, Very High Ommi-directional Range (VOR), Kipnuk, AK.

DATES: Comments must be received on or before January 26, 2009.

ADDRESSES: Send comments on the proposal to the U.S. Department of Transportation, Docket Operations, M–30, 1200 New Jersey Avenue, SE., West Building Ground Floor, Room W12–140, Washington, DC 20590–0001. You must identify the docket number FAA–2008–0940 and Airspace Docket No. 08–AAL–25, at the beginning of your comments. You may also submit comments on the Internet at *http://www.regulations.gov.*

FOR FURTHER INFORMATION CONTACT: Ken McElroy, Airspace and Rules Group, Office of System Operations Airspace

and AIM, Federal Aviation Administration, 800 Independence Avenue, SW., Washington, DC 20591; telephone: (202) 267–8783.

SUPPLEMENTARY INFORMATION:

Comments Invited

Interested parties are invited to participate in this proposed rulemaking by submitting such written data, views, or arguments as they may desire. Comments that provide the factual basis supporting the views and suggestions presented are particularly helpful in developing reasoned regulatory decisions on the proposal. Comments are specifically invited on the overall regulatory, aeronautical, economic, environmental, and energy-related aspects of the proposal.

Communications should identify both docket numbers (FAA–2008–0940 and Airspace Docket No. 08–AAL–25) and be submitted in triplicate to the Docket Management Facility (see **ADDRESSES** section for address and phone number). You may also submit comments through the Internet at *http://www.regulations.gov.*

Commenters wishing the FAA to acknowledge receipt of their comments on this action must submit with those comments a self-addressed, stamped postcard on which the following statement is made: ''Comments to Docket No. FAA–2008–0940 and Airspace Docket No. 08–AAL–25.'' The postcard will be date/time stamped and returned to the commenter.

All communications received on or before the specified closing date for comments will be considered before taking action on the proposed rule. The proposal contained in this action may be changed in light of comments received. All comments submitted will be available for examination in the public docket both before and after the closing date for comments. A report summarizing each substantive public contact with FAA personnel concerned with this rulemaking will be filed in the docket.

Availability of NPRMs

An electronic copy of this document may be downloaded through the Internet at *http://www.regulations.gov.* Recently published rulemaking documents can also be accessed through the FAA's Web page at *http://www.faa.gov/airports_airtraffic/air_traffic/publications/airspace_amendments/.*

You may review the public docket containing the proposal, any comments received, and any final disposition in person in the Dockets Office (see **ADDRESSES** section for address and phone number) between 9 a.m. and 5 p.m., Monday through Friday, except Federal holidays. An informal docket may also be examined during normal business hours at the office of the Regional Air Traffic Division, Federal Aviation Administration, 222 West 7th Avenue, Box 14, Anchorage, AK 99513–7587.

Persons interested in being placed on a mailing list for future NPRMs should contact the FAA's Office of Rulemaking, (202) 267–9677, for a copy of Advisory Circular No. 11–2A, Notice of Proposed Rulemaking Distribution System, which describes the application procedure.

The Proposal

The FAA is proposing an amendment to the Code of Federal Regulations (14 CFR Part 71), that proposes to revoke one Federal Airway V–328, and modify three Federal Airways, V–319, V–333 and V–480 in Alaska. The FAA is proposing this action to remove all airways off the Kipnuk, Very High Ommi-directional Range (VOR), Kipnuk, AK, in preparation for the VOR's eventual decommissioning from the National Airspace System (NAS). The portion of the Victor airways that are attached to the Kipnuk VOR are proposed to be removed. Two airways (V–319 and V–333) have the Kipnuk VOR supporting one segment of the airway, and will simply be shortened. One airway (V–480) would be modified to remove the Kipnuk from the description. However, three Area Navigation (RNAV) low altitude T routes will be revised in another airspace action to continue IFR service on routing along the same tracks as all four affected airways. The Kipnuk VOR decommissioning proposal was publicly advertised in non-rulemaking case numbers 02–AAL–31NR and 06–AAL–32NR. After receiving public comment, the FAA decided that keeping or moving the VOR was not feasible and that it should be decommissioned.

The justification addressed these areas; the VOR was only being used to support enroute airway operations, and village construction adjacent to the VOR's location in the Village of Kipnuk was encroaching on and degrading the VOR's signal in many quadrants. Additionally, the instrument approaches servicing the airport at Kipnuk are RNAV approaches, which do not utilize the Kipnuk VOR. This action would be timed to coincide with the planned navigation aid decommissioning for July 2, 2009. One Victor airway (V–480) that passes over the Village of Kipnuk, will remain between Bethel (BET), AK, and Saint Paul Island (SPY) Nondirectional Beacon, AK, if that airway passes the flight inspection. The T route revisions mentioned above will be announced in a separate airspace action, that will also coincide with the July 2, 2009, VOR decommissioning date. The intended effect of this proposal is to revise three Victor Airways and revoke one Victor Airway when the Kipnuk (IIK) VOR is decommissioned on July 2, 2009.

The FAA has determined that this proposed regulation only involves an established body of technical regulations for which frequent and routine amendments are necessary to keep them operationally current. Therefore, this proposed regulation: (1) Is not a ''significant regulatory action'' under Executive Order 12866; (2) is not a ''significant rule'' under Department of Transportation (DOT) Regulatory Policies and Procedures (44 FR 11034; February 26, 1979); and (3) does not warrant preparation of a regulatory evaluation as the anticipated impact is so minimal. Since this is a routine matter that will only affect air traffic procedures and air navigation, it is certified that this proposed rule, when promulgated, will not have a significant economic impact on a substantial number of small entities under the criteria of the Regulatory Flexibility Act.

The FAA's authority to issue rules regarding aviation safety is found in Title 49 of the United States Code. Subtitle 1, Section 106 describes the authority of the FAA Administrator. Subtitle VII, Aviation Programs, describes in more detail the scope of the agency's authority.

This rulemaking is promulgated under the authority described in Subtitle VII, Part A, Subpart 1, Section 40103. Under that section, the FAA is charged with prescribing regulations to assign the use of the airspace necessary to endure the safety of aircraft and the efficient use of airspace. This regulation is within the scope of that authority as it revokes and modifies VOR Federal Airways in Alaska.

Environmental Review

The FAA has determined that this action qualifies for categorical exclusion under the National Environmental Policy Act in accordance with FAA Order 1050.1E, ''Environmental Impacts: Policies and Procedures,'' paragraph 311a. This airspace action is not expected to cause any potentially significant environmental impacts, and no extraordinary circumstances exist that warrant preparation of an environmental assessment.

List of Subjects in 14 CFR Part 71

Airspace, Incorporation by reference, Navigation (air).

The Proposed Amendment

In consideration of the foregoing, the Federal Aviation Administration proposes to amend 14 CFR part 71 as follows:

PART 71—DESIGNATION OF CLASS A, B, C, D, AND E AIRSPACE AREAS; AIR TRAFFIC SERVICE ROUTES; AND REPORTING POINTS

1. The authority citation for part 71 continues to read as follows:

Authority: 49 U.S.C. 106(g), 40103, 40113, 40120; E.O. 10854, 24 FR 9565, 3 CFR, 1959–1963 Comp., p. 389.

§ 71.1 [Amended]

2. The incorporation by reference in 14 CFR 71.1 of FAA Order 7400.9S, *Airspace Designations and Reporting Points,* signed October 3, 2008, and effective October 31, 2008, is to be amended as follows:

Paragraph 6010(b) Alaskan VOR Federal Airways.

* * * * *

V–319 [Amended]

From Yakutat, AK, via Johnstone Point, AK, INT Johnstone Point 286° and Anchorage, AK, 117° radials; Anchorage, AK; Sparrevohn, AK; Bethel, AK; Hooper Bay, AK; to Nanwak, AK NDB.

* * * * *

V–333 [Amended]

From Hooper Bay, AK; Nome, AK; to Shishmaref, AK.

* * * * *

V–328 [Removed]

* * * * *

V–480 [Amended]

From Mt. Moffett, AK, NDB, 20 AGL via St. Paul Island, AK, NDB, 20 AGL; Bethel, AK; McGrath, AK; Nenana, AK; to Fairbanks, AK.

* * * * *

Issued in Washington, DC, on November 25, 2008.

Edith V. Parish,

Manager, Airspace and Rules Group.

[FR Doc. E8–29239 Filed 12–9–08; 8:45 am]

BILLING CODE 4910–13–P

DEPARTMENT OF STATE

22 CFR Part 62

[Public Notice: 6448]

RIN 1400–AC36

Exchange Visitor Program

AGENCY: United States Department of State.

ACTION: Proposed rule with request for comment.

SUMMARY: The Department of State is proposing to amend the General Provisions (Subpart A) of the existing Exchange Visitor Program regulations in order to provide greater specificity regarding program administration, sponsor obligations and participant eligibility in the Exchange Visitor Program. Certain definitions have been added or deleted. New requirements regarding applications for designation and redesignation, health insurance, the collection of employment authorization information on dependants and the successful completion of criminal background checks on all Responsible Officers and Alternate Responsible Officers are proposed. In addition, the requirements set forth in Subpart F (SEVIS reporting requirements) are consolidated into Subpart A.

DATES: The Department will accept comments from the public up to 60 days from December 10, 2008.

ADDRESSES: You may submit comments, identified by any of the following methods:

- Persons with access to the Internet may view this notice and provide comments by going to the regulations.gov Web site at: *http://www.regulations.gov/index.cfm*
- Mail (paper, disk, or CD–ROM submissions): U.S. Department of State, Office of Designation, SA–44, 301 4th Street, SW., Room 734, Washington, DC 20547.
- E-mail: *jexchanges@state.gov.* You must include the Title and RIN in the subject line of your message.

FOR FURTHER INFORMATION CONTACT: Stanley S. Colvin, Deputy Assistant Secretary for Private Sector Exchange, U.S. Department of State, SA–44, 301 4th Street, SW., Room 734, Washington, DC 20547; or e-mail at *jexchanges@state.gov.*

SUPPLEMENTARY INFORMATION: The Department of State is proposing modifications to § 62.2 through § 62.16 of the Code of Federal Regulations, Title 22: Foreign Relations, Part 62—Exchange Visitor Program (Subpart A—General Provisions). Subpart A has remained largely unchanged since 1993, when the predecessor agency with oversight of the Exchange Visitor Program, the United States Information Agency (USIA), substantially rewrote all of the regulations governing the Program. (See 58 FR 15196, Mar. 19, 1993, as amended at 59 FR 34761, July 7, 1994, Redesignated at 64 FR 54539, Oct. 7, 1999). In the intervening 15 years, the Department of State has modified regulations governing certain categories of exchange and has added new categories. Significantly, the introduction of the Student and Exchange Visitor Information System (SEVIS) in 2003 required major amendments to the regulations. Proposed modifications to Subpart A are necessary to bring the general regulatory provisions in line with the category-specific sections or simply to update the regulations to reflect generic business changes that have occurred during the past 15 years.

The proposed rule includes a new provision requiring all new applicants for sponsor designation to be subject to ''on-site'' reviews. Such reviews, conducted by the Department of State or a third party on its behalf, will be required before a new applicant is designated as a sponsor. Site visits of existing sponsors may occur at the discretion of the Department. The applicants and/or sponsors will bear the cost of these reviews.

The Department of State also proposes to require potential Responsible Officers (''RO'') and Alternate Responsible Officers (''ARO'') to undergo a criminal background check. This requirement is reflective of the importance of the role of such individuals within sponsor organizations and their rights of access to and manipulation of data for a controlled Federal Government database. ROs and AROs are the only individuals authorized to issue and sign Form DS–2019, the ''Certificate of Eligibility for Exchange Visitor (J–1) Status.'' Foreign nationals who participate in the Exchange Visitor Program must obtain Forms DS–2019 in order to apply for a J-visa to gain entry into the United States. Thus, it is of vital importance that the individuals who have access to a secured Federal Government database (SEVIS) be properly vetted. The Department of State introduced without issue, in 2005, a criminal background check requirement for individuals hosting secondary school student participants. Sponsors of these programs routinely conduct over 60,000 criminal background checks each year. The Department of State anticipates that conducting criminal background checks

on ROs and AROs will be equally successful.

The Department of State will not require applicants or sponsors to submit the results of the criminal background check. Rather, a component of the process of obtaining designation or redesignation requires the Chief Executive Officer, President, or other similar official to submit, as supporting documentation to the application package, a certification that the organization's RO and AROs have undergone a criminal background check. The proposed regulation does not set specific requirements for the sponsors to follow with respect to report format, screening company, or assessment of results. The Department does anticipate, however, that a thorough criminal background check would provide management decision makers with sufficient information to determine whether ROs and AROs are citizens of the United States or lawful permanent residents, whether any record of past criminal activity should disqualify them from the positions, and whether there is pertinent information regarding their personal credit-worthiness. These three areas of review are generally examined matter regarding suitability to hold positions that affect national security.

The Department of State recommends, but does not require, that sponsors utilize the services of an accredited background screener. Sponsors who do decide to use a background screener are free to choose among a number of available options. Some entities that can assist sponsors in finding accredited background screeners to conduct their investigations include Intellicorp, Choicepoint, and members of the National Association of Professional Background Screeners (NAPBS). For example, the NAPBS has over 500 members (a list of which is located at *http://www.NAPBS.com*), all of whom are expected to adhere to the NAPBS code of conduct governing background investigations and confidentiality. Use of an accredited background screener does not confirm an individual's suitability to act as an RO or an ARO and is in no way a substitution for the sponsor's judgment in making such decisions.

In July 2007, the Department of State implemented an interim final rule on Trainees and Interns that required sponsors to screen, vet and enter into written agreements with third parties who assist them in recruiting, selecting, screening, orienting, placing, training or evaluating foreign nationals who participate in training and internship programs. This requirement is relevant to sponsors who rely upon ''host organizations'' to provide the actual training or intern programs. It also affects foreign agents who play a vital role in the selection of potential exchange visitors. These trainee and intern regulations require all third parties—foreign and domestic alike— to provide Dun & Bradstreet identification numbers. Similarly, this proposed rule requires all applicants for sponsor designation to submit current Dun & Bradstreet Business Information Reports on themselves. A current Dun and Bradstreet Business Information Report is also required of all sponsors with the submission of an application for redesignation. Further, sponsors seeking redesignation will be required to submit a list of all third parties with whom sponsors have executed written agreements to act on their behalf and separate certifications that the sponsors have obtained Dun & Bradstreet Business Information Reports on all of such third parties.

The proposed rule addresses the current levels of health insurance coverage a sponsor must require that its exchange visitor (and spouse and dependants) must maintain during the duration of their program participation. The Department of State proposes no substantive changes to the insurance requirements with the exception of the addition of dental insurance coverage. Instead, the Department is proposing to increase the levels of coverage so they more accurately align with current health and accident costs and industry standards. Over time, the Department has found that sponsors have differing interpretations regarding the period of time for which insurance coverage is required. To eliminate this area of ambiguity, additional language has been added to explain the timeframe of required coverage from ''entry to exit''.

The Department of State proposes to collect information on the employment of the accompanying spouse and dependants while in the United States. As a security matter, current information on the employment entity and work location of dependants is necessary.

Definitions have been added or modified to clarify or reflect changes. New definitions in this proposed rule clarify SEVIS functions or fields or reflect changes that have occurred since 1993.

The term ''accredited educational institution'' has been changed to ''accredited academic institution.'' In the proposed definition, the Department of State clarifies that educational institutions that offer primarily vocational or technical courses of study are not considered academic. The addition of the ''technical'' distinction parallels the Department of Education's replacement of regulations governing purely ''vocational'' studies with a new ''vocational/technical'' classification that acknowledges the new information technology curricula that are neither vocational nor academic.

Three SEVIS-related definitions have been added to the proposed regulations: ''actual and current U.S. address,'' ''site of activity,'' and ''validation.'' The first two definitions are critical as they relate to the physical location of the exchange visitor. Simply put, sponsors must maintain current and accurate data in these SEVIS fields so that foreign nationals may be located at the site of activity (location where the program will take place) or at the actual and current U.S. address (residence). Maintaining this information is a matter of national security. The SEVIS function of validating a record is similarly important. When an exchange visitor enters the United States and reports to his or her exchange program, the sponsor must note this occurrence in SEVIS through the validation process, thereby demonstrating that an exchange visitor is currently present in the United States and participating in the exchange visitor program identified on the Form DS–2019.

The term ''Certificate of Good Standing'' has been added and, for clarity, the definition for ''Citizen of the United States'' has been split into two: one that pertains to individuals and another that relates to legal entities.

This rule reflects changes in technology, and it moves requirements previously in Subpart F to Subpart A. The change from paper numbered forms to electronically generated Forms DS–2019 requires two fundamental alterations to the regulations. First, any requirements relating to the physical storage of unused forms are obsolete. Second, matters of national security require that circulating Forms DS–2019 (i.e., those not kept internally in a sponsor's files) must be originals. All Forms DS–2019 must be generated through SEVIS. The proposed regulations prohibit the use of scanned, copied, or electronic versions of Forms DS–2019 except in response to a request from the Department of State or the Department of Homeland Security or for maintenance of complete exchange visitor records by sponsors. The proposed rule also requires sponsors to request that potential program participants return unused Forms DS–2019, and that such forms be destroyed.

The proposed rule also clarifies those actions a sponsor must undertake to

update an exchange visitor's SEVIS record (or the record of any accompanying spouse and dependants, if any) when the exchange visitor's program participation is ended early (e.g., concluded successfully or terminated as a result of violation of program rules, regulations or U.S. law). The Department of State is reducing from 21 to ten (10) days the time a sponsor has following notification of an exchange visitor's change of circumstance to update the exchange visitor's SEVIS record (or the records of a spouse or dependants).

Finally, as a recordkeeping and administrative oversight matter, sponsors will be required to maintain current information in SEVIS on its exchange visitor program, address, telephone numbers, facsimile numbers, or email addresses. All Department communication to sponsors related to program oversight, policy, redesignation, etc. sent to ROs and AROs are generated from information contained in SEVIS. The Department will not recognize non-receipt of notification as grounds for appeal if a sponsor does not respond to a request. Sponsors are required to ensure that their spam filters do not block reception of SEVIS or Department notices. The term, ''in writing'' is expanded to include the option for electronic signatures to support movement toward a paperless environment.

The data collection required for management audit templates is within the scope of existing data collections (see OMB 1405–0147, Form DS–7000, Catalog of Information Collection Requirements under 22 CFR Part 62, the Exchange Visitor Program (SEVIS)).

Note: Current § 62.17 remains unchanged.

Regulatory Analysis

Administrative Procedure Act

The Department of State has determined that this Proposed Rule involves a foreign affairs function of the United States and is consequently exempt from the procedures required by 5 U.S.C. 553 pursuant to 5 U.S.C. 553(a)(1). Nonetheless, because of its importance to the public, the Department has elected to solicit comments during a 60-day comment period.

Small Business Regulatory Enforcement Fairness Act of 1996

The Proposed Rule has been found not to be a major rule within the meaning of the Small Business Regulatory Enforcement Fairness Act of 1996.

Regulatory Flexibility Act/Executive Order 13272: Small Business

Since this Proposed Rule is exempt from 5 U.S.C 553, and no other law requires the Department of State to give notice of proposed rulemaking, it is not subject to the Regulatory Flexibility Act (5 U.S.C. 601, *et seq.*) and Executive Order 13272, § 3(b).

Executive Order 12866, as Amended

The Department of State does not consider this proposed rule to be a ''significant regulatory action'' under Executive Order 12866, as amended, § 3(f), Regulatory Planning and Review. In addition, the Department of State is exempt from Executive Order 12866 except to the extent that it is promulgating regulations in conjunction with a domestic agency that are significant regulatory actions. The Department has nevertheless reviewed the proposed rule to ensure its consistency with the regulatory philosophy and principles set forth in that Executive Order.

Executive Order 12988

The Department of State has reviewed this proposed rule in light of §§ 3(a) and 3(b)(2) of Executive Order 12988 to eliminate ambiguity, minimize litigation, establish clear legal standards, and reduce burden.

Unfunded Mandates Reform Act of 1995

Section 202 of the Unfunded Mandates Reform Act of 1995 (UFMA), Public Law 104–4, 109 Stat. 64, 2 U.S.C. 1532, generally requires agencies to prepare a statement before proposing any rule that may result in an annual expenditure of $100 million or more by state, local, or tribal governments, or by the private sector. This rule will not result in any such expenditure, nor will it significantly or uniquely affect small governments.

Executive Orders 12372 and 13132

This regulation will not have substantial direct effects on the States, on the relationship between the national government and the States, or on the distribution of power and responsibilities among the various levels of government. Therefore, in accordance with § 6 of Executive Order 13132, it is determined that this rule does not have sufficient federalism implications to require consultations or warrant the preparation of a federalism summary impact statement. Executive Order 12372, regarding intergovernmental consultation on Federal programs and activities, does not apply to this regulation.

Paperwork Reduction Act

The information collection requirements contained in this proposed rulemaking (criminal background screening of Responsible Officers (''ROs'') and Alternate Responsible Officers (''AROs'') are pursuant to the Paperwork Reduction Act, 44 U.S.C. Chapter 35. Specifically OMB Control Number 1405–0147, expiration date: 09/30/2010, applies: *Form DS–3037—Update of Information on Exchange Visitor Program Sponsor, Form DS–7000—Catalog of Information Collection Requirements Under 22 CFR Part 62, the Exchange Visitor Program (SEVIS).*

List of Subjects in 22 CFR Part 62

Cultural exchange programs, Reporting and recordkeeping requirements.

Accordingly, 22 CFR part 62 is proposed to be amended as follows:

PART 62—EXCHANGE VISITOR PROGRAM

1. The authority citation for part 62 continues to read as follows:

Authority: 8 U.S.C. 1101(a)(15)(J), 1182, 1184, 1258; 22 U.S.C. 1431–1442, 2451 *et seq.*; Foreign Affairs Reform and Restructuring Act of 1998, Public Law 105–277, Div. G, 112 Stat. 2681 *et seq.*; Reorganization Plan No. 2 of 1977, 3 CFR, 1977 Comp. p. 200; E.O. 12048 of March 27, 1978; 3 CFR, 1978 Comp. p. 168; the Illegal Immigration Reform and Immigrant Responsibility Act (IIRIRA) of 1996, Public Law 104–208, Div. C, 110 Stat. 3009–546, as amended; Uniting and Strengthening America by Providing Appropriate Tools Required to Intercept and Obstruct Terrorism Act of 2001 (USA PATRIOT ACT), Public Law 107–56, Sec. 416, 115 Stat. 354; and the Enhanced Border Security and Visa Entry Reform Act of 2002, Public Law 107–173, 116 Stat. 543.

2. Sections 62.2—62.16 are revised as follows:

* * * * *

Sec.
62.2 Definitions.
62.3 Sponsor eligibility.
62.4 Categories of participant eligibility.
62.5 Application procedure.
62.6 Designation.
62.7 Redesignation.
62.8 General program requirements.
62.9 General obligations of sponsors.
62.10 Program administration.
62.11 Duties of Responsible Officers and Alternate Responsible Officers.
62.12 Control of Forms DS–2019.
62.13 Notification requirements.
62.14 Insurance.
62.15 Reporting requirements.
62.16 Employment.

* * * * *

§ 62.2 Definitions.

Accompanying spouse and dependants. The alien spouse and minor unmarried children of an exchange visitor who are accompanying or following to join the exchange visitor and who seek to enter or have entered the United States temporarily on a non-immigrant J–2 visa or seeks to acquire or have acquired such status after admission. For the purpose of these regulations, a minor is a person under the age of 21.

Accredited academic institution. Any publicly or privately operated primary, secondary, or post-secondary institution in the United States that offers primarily academic programs and is duly accredited by the appropriate academic accrediting authority of the State in which such institution is located; provided, however, that in addition, all post-secondary institutions must also be accredited by a nationally recognized accrediting agency or association as recognized by the Secretary of Education. An institution that offers primarily vocational or technical programs does not fall within the purview of an academic institution for this purpose.

Act. The Mutual Educational and Cultural Exchange Act of 1961, as amended.

Actual and current U.S. address. The physical, geographic location at which an exchange visitor resides while participating in an exchange program.

Alternate Responsible Officer (''ARO''). An employee or officer of a designated sponsor who has been nominated by the sponsor, and approved by the Department of State to assist the Responsible Officer in carrying out the responsibilities outlined in § 62.11. An ARO must be a citizen of the United States or a legal permanent resident.

Certificate of Good Standing. A document issued by an official of the Department of State in the State where the organization resides. A Certificate of Good Standing confirms that a corporation, partnership or other legal entity is in existence or authorized to transact business. A Certificate of Good Standing is also known as a Certificate of Authorization or a Certificate of Existence.

Citizen of the United States (individual). A person who:

(1) Is a citizen of the United States or any of its territories or possessions; or

(2) Has been lawfully admitted for permanent residence, within the meaning of § 101(a)(20) of the Immigration and Nationality Act (8 U.S.C. 1101).

Citizen of the United States (entity). (1) A general or limited partnership created or organized under the laws of the United States, or of any state, the District of Columbia, or any territory or possession of the United States, of which a majority of the partners are citizens of the United States, which:

(i) Has its principal place of business in the United States; and

(ii) The majority of its partners, and in instances where the partnership is additionally governed by a Board, the majority of its officers are citizens of the United States; or

(2) A for-profit corporation, association, or other legal entity created or organized under the laws of the United States, or of any state, the District of Columbia, or a territory or possession of the United States, whose principal place of business is located in the United States, and

(i) Whose shares or voting interests are publicly traded on a U.S. stock exchange; or

(ii) A majority of whose officers, a majority of whose shareholders, and a majority of the members of its Board of Directors are citizens of the United States and collectively hold a majority of the shares or stock (i.e., the controlling interest); or

(3) A non-profit corporation, association, or other legal entity created or organized under the laws of the United States, or any state, the District of Columbia, or any territory or possession of the United States; and

(i) Which is qualified with the Internal Revenue Service as a tax-exempt organization pursuant to § 501(c)(3) of the Internal Revenue Code; and

(ii) Whose principal place of business is located in the United States; and

(iii) A majority of whose officers and a majority of whose members of its Board of Directors, Board of Trustees or other like body vested with its management are citizens of the United States; or

(4) An accredited college, university, or other post-secondary academic institution in the United States created or organized under the laws of the United States, or of any state, county, municipality, or other political subdivision thereof, the District of Columbia, or of any territory or possession of the United States; or

(5) An agency of the United States, or of any State or local government, the District of Columbia, or any territory or possession of the United States.

Clerical work. Routine administrative work generally performed in an office or office-like setting, such as data entry, filing, typing, mail sorting and distribution, and other general administrative or support office tasks.

Consortium. A not-for-profit corporation, partnership, joint venture or other association formed by two or more accredited academic institutions for the purpose of sharing educational resources, conducting research, and/or developing new programs to enrich or expand the opportunities offered by its members. An academic institution in the United States that participates in a consortium is not barred from having separate exchange visitor program designations of its own.

Country of nationality or last legal permanent residence. The country of which the exchange visitor is a national at the time status as an exchange visitor was acquired or the last foreign country in which the visitor had a legal permanent residence before acquiring status as an exchange visitor.

Cross-cultural activity. An activity designed to promote exposure and interchange between exchange visitors and Americans so as to increase their understanding of each other's society, culture, and institutions.

Department of State. The United States Department of State.

Designation. The written authorization given by the Department of State to an exchange visitor program applicant to conduct an exchange visitor program as a sponsor.

Employee. An individual who provides services or labor for an employer for wages or other remuneration. A third party, as defined in this section, or an independent contractor, as defined in 8 CFR 274a.1(j), is not an employee.

Exchange visitor. A foreign national who is in the United States temporarily on a non-immigrant J–1 visa to participate in an exchange visitor program. The term does not include the accompanying spouse and dependants of the exchange visitor.

Exchange Visitor Program. The international exchange program administered by the Department of State to implement the Act by means of educational and cultural exchange programs. When ''exchange visitor program'' is set forth in lower case, it refers to the individual program of a sponsor that has been designated by the Department of State.

Exchange visitor's government. The government of the exchange visitor's country of nationality or last legal permanent residence.

Financed directly. Financed in whole or in part by the U.S. Government or the exchange visitor's government with funds contributed directly to the exchange visitor in connection with his

or her participation in an exchange visitor program.

Financed indirectly. (1) Financed by an international organization with funds contributed by either the United States or the exchange visitor's government for use in financing international educational and cultural exchanges, or

(2) Financed by an organization or institution with funds made available by either the United States or the exchange visitor's government for the purpose of furthering international educational and cultural exchange.

Foreign Medical Graduate. A foreign national that

(1) Is a graduate of a school of medicine which is accredited by a body or bodies approved for the purpose by the Secretary of Education (regardless of whether such school of medicine is in the United States) and entering the United States for the purpose of seeking to pursue graduate medical education or training at accredited schools of medicine or scientific institutions; or, for the purposes of observation, consultation, teaching, or research; or,

(2) Has passed Parts I and II of the National Board of Medical Examiners Examination (or an equivalent examination as determined by the Secretary of Health and Human Services), has competency in oral and written English, will be able to adapt to the educational and cultural environment in which he or she will be receiving his/her education or training, and has adequate prior education and training to participate satisfactorily in the program for which he/she is coming to the United States.

Form DS–2019. A Certificate of Eligibility for Exchange Visitor (J–1) Status, a controlled document of the Department of State.

Form DS–3036. Exchange Visitor Program Application, a controlled document of the Department of State.

Form DS–3037. Update of Information on a Sponsor's Exchange Visitor Program. A controlled document of the Department of State.

Form DS–7002. Training/Internship Placement Plan (T/IPP). A controlled document of the Department of State. This Form is for use in connection with the Trainee, Intern and Student Intern categories only.

Full course of study. Full-time enrollment in an academic program of classroom participation and study and/or doctoral thesis research at an accredited academic institution as follows:

(1) Secondary school students must satisfy the attendance and course requirements of the State in which the school they attend are located; and

(2) College and university students must register for and complete a full course of study, as defined by the accredited academic institution in which the student is registered, unless exempted in accordance with § 62.23(e).

Graduate medical education or training. Participation in a program in which a foreign medical graduate will receive graduate medical education or training, which generally consists of a residency or fellowship program involving health care services to patients, but does not include programs involving observation, consultation, teaching or research in which there is no or only incidental patient care. This program may consist of a medical specialty, a directly related medical subspecialty, or both.

Home-country physical presence requirement. The requirement that an exchange visitor (J visa) who is within the purview of section 212(e) of the Immigration and Nationality Act and Public Law 94–484 (substantially quoted in 22 CFR 41.63) must reside and be physically present in the country of nationality or last legal permanent residence for an aggregate of at least two years following departure from the United States before the exchange visitor is eligible to apply for an immigrant visa or permanent residence, a non-immigrant H visa as a temporary worker or trainee, or a non-immigrant L visa as an intracompany transferee, or a non-immigrant H or L visa as the spouse or minor child of a person who is a temporary worker or trainee or an intercompany transferee. Section 101(a)(15)(H) or section 101(a)(15)(L) of the Immigration and Nationality Act, as amended.

Host organization. A third party in the United States that conducts training and internship programs on behalf of a designated sponsor pursuant to an executed written agreement between the two parties.

Internship program. A structured and guided work-based learning program as set forth in an individualized T/IPP that reinforces an intern's academic study; recognizes the need for work-based experience; provides on-the-job exposure to American techniques, methodologies, and technologies; and enhances the intern's knowledge of American culture and society.

J visa. A non-immigrant visa issued pursuant to 8 U.S.C. 1101(a)(15)(J). A J–1 visa is issued to an exchange visitor. A J–2 visa is issued to the exchange visitor's accompanying non-immigrant immediate family, spouse and minor dependant children.

Office of Designation. The Department of State office to which the Secretary of State delegated the authority to administer the Exchange Visitor Program.

On-the-job training. An individual's observation of and participation in given tasks demonstrated by experienced workers for the purpose of acquiring competency in such tasks.

Prescribed course of study. A non-degree academic program with a specific educational objective. Such course of study may include intensive English language training, classroom instruction, research projects, and/or academic training to the extent permitted in § 62.23.

Reciprocity. The participation of a U.S. citizen in an educational and cultural program in a foreign country in exchange for the participation of a foreign national in the Exchange Visitor Program. Where used herein, ''reciprocity'' will be interpreted broadly; unless otherwise specified, reciprocity does not require a one-for-one exchange or that exchange visitors be engaged in the same activity.

Responsible Officer (''RO''). An employee or officer of a designated sponsor who has been nominated by the sponsor, and approved by the Department of State to carry out the duties outlined in § 62.11. An RO must be a citizen of the United States or a legal permanent resident.

Secretary of State. The Secretary of State or an employee of the U.S. Department of State acting under a delegation of authority from the Secretary of State.

SEVIS (Student and Exchange Visitor Information System). The statutorily mandated system designed to collect information on non-immigrant students (F and M visa), exchange visitors (J visa), and their spouses and dependants (F–2, M–2, ad J–2). SEVIS enables schools and program sponsors to electronically transmit information and event notifications, via the Internet, to the Department of Homeland Security and the Department of State throughout a student's or exchange visitor's stay in the United States.

Site of activity. The physical, geographic location(s) where an exchange visitor participates in his or her exchange program. If a program takes place at more than one location, the sponsor must list all locations in SEVIS and indicate as ''primary'' the one at which the exchange visitor is currently located.

Sponsor. A legal entity designated by the Secretary of State to conduct an exchange visitor program.

Staffing/employment agency. A U.S. business that hires individuals for the express purpose of supplying workers to

other businesses. Typically, the other businesses where workers are placed pay an hourly fee per employee to the staffing/employment agency, of which the worker receives a percentage.

Student internship program. A structured and guided work-based learning program as set forth in an individualized Form DS–7002 that fulfills a student's academic degree requirements, recognizes the need for work-based experience, provides on-the-job exposure to American techniques, methodologies, and technologies, and enhances a student intern's knowledge of American culture and society.

Third party. A person or legal entity with whom a sponsor has executed a written agreement for the person or entity to act on behalf of the sponsor in the conduct of the sponsor's exchange visitor program. A third party under contract with a sponsor may not subcontract or delegate its Exchange Visitor Program obligations to another party. Sponsors are required to take all reasonable steps to ensure that third parties know and comply with all applicable provisions of these regulations. The Department of State imputes to sponsors all actions a third party takes in acting on their behalf.

Training program. A structured and guided work-based learning program, as set forth in Form DS–7002, that develops new and advanced skills in a trainee's occupational field through exposure to American techniques, methodologies, and technologies; and enhances a trainee's understanding of American culture and society.

Validation. The process by which a Responsible Officer or Alternate Responsible Officer updates a SEVIS record of an exchange visitor to show that the prospective exchange visitor entered the United States, reported to his or her sponsor, and is participating in the exchange visitor program, at the site of activity identified on the Form DS–2019.

§ 62.3 Sponsor eligibility.

(a) Entities eligible to apply for designation as a sponsor of an exchange visitor program are the following:

(1) U.S. local, State and Federal Government agencies; and government agencies of any U.S. territories and possessions; and government agencies of the District of Columbia;

(2) International agencies or organizations of which the United States is a member and that have an office in the United States; or

(3) Reputable organizations that are ''citizens of the United States,'' as that term is defined in § 62.2.

(b) To be eligible for designation as a sponsor, an entity is required to:

(1) Demonstrate, to the Department of State's satisfaction, its ability to comply and remain in continual compliance with all applicable provisions of 22 CFR part 62;

(2) Meet at all times its financial obligations and responsibilities attendant to successful sponsorship of its exchange visitor program;

(3) Demonstrate that the organization or its proposed RO has no fewer than three years experience in international exchange; and

(4) Has successfully completed an ''on-site'' inspection conducted by the Department of State or its agent, the cost for which will be born by the applicant.

§ 62.4 Categories of participant eligibility.

Sponsors select foreign nationals to participate in exchange visitor program(s) in the United States. Participation is limited to foreign nationals who meet the following criteria for each of the following categories:

(a) *Student.* A foreign national who is:

(1) Studying in the United States and:

(i) Pursuing a full course of study at a secondary accredited academic institution;

(ii) Pursuing a full course of study leading to or culminating in the award of a U.S. degree from a post-secondary accredited academic institution; or

(iii) Engaged full-time in a prescribed course of study of up to 24 months (non-degree) duration conducted by:

(A) A post-secondary accredited academic institution; or

(B) An institute approved by or acceptable to the post-secondary accredited academic institution, where the student is to be enrolled upon completion of the non-degree program;

(2) Engaged in academic training as permitted in § 62.23(f);

(3) Engaged in English language training at:

(i) A post-secondary accredited academic institution, or

(ii) An institute approved by or acceptable to the post-secondary accredited academic institution where the college/university student is to be enrolled upon completion of the language training; or

(4) Engaged full-time in a student internship program conducted by a post-secondary accredited educational institution.

(b) *Short-term scholar.* A foreign national who is a professor, research scholar, or person with similar education or accomplishments who enters the United States for a short-term visit for the purpose of lecturing, observing, consulting, training, or demonstrating special skills at research institutions, museums, libraries, post-secondary accredited academic institutions, or similar types of institutions.

(c) *Trainee.* A foreign national participating in a structured and guided work-based training program in his or her specific occupational field and who has either:

(1) A degree or professional certificate from a foreign post-secondary academic institution and at least one year of prior related work experience in his or her occupational field acquired outside the United States; or

(2) Five years of work experience in his or her occupational field acquired outside the United States. Training is limited to the occupational category or categories for which a sponsor has obtained designation.

(d) *Teacher.* A foreign national with a minimum of three years of teaching experience for the purpose of teaching full-time in a primary or secondary accredited academic institution.

(e) *Professor.* A foreign national whose primary purpose is teaching, lecturing, observing, or consulting at post-secondary accredited academic institutions, museums, libraries, or similar types of institution. A professor may also conduct research, unless prohibited by the sponsor.

(f) *Research scholar.* A foreign national whose primary purpose is conducting research, observing, or consulting in connection with a research project at research institutions, corporate research facilities, museums, libraries, post-secondary accredited academic institutions, or similar types of institutions. A research scholar may also lecture, unless prohibited by the sponsor.

(g) *Specialist.* A foreign national who is an expert in a field of specialized knowledge or skills who enters the United States for the purpose of observing, consulting, or demonstrating special knowledge or skills.

(h) *Other person of similar description.* A foreign national of description similar to those set forth in paragraphs (a) through (g) of this section coming to the United States as a participant in an exchange visitor program designated by the Department of State under this category, for the purpose of teaching, instructing or lecturing, studying, observing, conducting research, consulting, demonstrating special skills, or receiving training. The programs designated by the Department of State in this category consist of:

(1) *Alien physician.* A foreign national who is a graduate of a school of medicine who is coming to the United States under a program in which he or she will receive graduate medical education or training conducted by accredited U.S. schools of medicine or scientific institutions.

(2) *International visitor.* A foreign national who is a recognized or potential leader, selected by the Department of State for the purpose of consulting, observing, conducting research, training, or demonstrating special skills in the United States.

(3) *Government visitor.* A foreign national who is an influential or distinguished person, selected by a U.S. Federal, State, or local government agency for the purpose of consulting, observing, training, or demonstrating special skills in the United States.

(4) *Camp counselor.* A foreign national selected to be a counselor in a summer camp in the United States (e.g., during the U.S. summer months).

(5) *Au pair.* A foreign national who comes to the United States for a period of one year for the purpose of residing with an American host family and participate directly in their home life, while providing limited childcare services, and fulfilling an educational requirement.

(6) *Summer Work and Travel.* A foreign national who is a bona fide foreign post-secondary student currently enrolled in and actively pursuing a degree or a full-time course of study at a foreign accredited post-secondary academic institution whose purpose is work and travel in the United States for up to four months during his or her summer vacation.

(7) *Intern.* A foreign national participating in a structured and guided work-based internship program in his or her specific academic field and who is either:

(i) Currently enrolled full time in and actively pursuing studies at a degree-or certificate-granting post-secondary academic institution outside the United States; or

(ii) Graduated from such an institution no more than 12 months prior to the exchange visitor program begin date reflected on the Form DS–2019.

§ 62.5 Application procedure.

(a) An entity meeting the eligibility requirements set forth in § 62.3 may apply to the Department of State for designation as an Exchange Visitor Program sponsor. Designation will not be considered if an applicant cannot meet the eligibility requirements set forth in § 62.3. An applicant must first complete and submit Form DS–3036 in SEVIS. The complete application must consist of:

(1) A completed copy of Form DS–3036 signed by the applicant's Chief Executive Officer, President, or equivalent;

(2) Required supporting documentation and certifications as set forth herein; and

(3) Confirmation of payment of the required fee through pay.gov as set forth in § 62.17.

Applicants should also refer to the Department of State's website for further guidance on the application process.

(b) The complete application must set forth, in detail, the applicant's proposed exchange program activity and must demonstrate, to the Department of State's sole satisfaction, the applicant's ability to meet the designation requirements set forth in § 62.3 and the sponsor obligations set forth in § 62.9.

(c) Applications must be accompanied by the following supporting documents:

(1) Evidence of legal status of the applicant as a U.S. corporation, partnership, or other legal entity (e.g., charter, proof of incorporation, partnership agreement, as applicable) as set forth in § 62.3(a);

(2) Evidence of experience in operating a successful business, including a minimum of three years of experience in international exchange by the organization or by the proposed RO;

(3) Evidence of the applicant's financial viability as set forth in § 62.9(e) and any supplemental or explanatory financial information the Department of State may request.

(i) An established organization must present a current audit report with audit notes prepared by an independent certified public accounting firm.

(ii) A newly formed organization must present a compilation (a balance sheet, statement of cash flows and all disclosures, revenues, expenditures, and notes to financial statements) prepared by an independent certified public accounting firm demonstrating that the organization has been capitalized with sufficient funds to cover general operating expenses and costs associated with an exchange;

(iii) The Department of State may, in its sole discretion, condition its approval of the acceptance of full financial responsibility by the non-governmental sponsor by requiring such sponsor to secure a payment bond in favor of the Department guaranteeing the sponsor's obligations hereunder.

(4) A current Certificate of Good Standing or Certificate of Existence;

(5) A current Business Information Report on the applicant organization from Dun & Bradstreet;

(6) Evidence of current accreditation if the applicant is a secondary or post-secondary academic institution;

(7) Evidence of current licensure, if required by local, state, or Federal law, to carry out the activity for which it is seeking designation;

(8) A statement signed by the Chief Executive Officer, President, or equivalent certifying that:

(i) The applicant is a citizen of the United States as defined in § 62.2,

(ii) The proposed RO and all proposed ARO(s) are United States citizens or legal permanent residents.

(iii) The sponsor has completed a criminal background check on the potential RO and all ARO(s) and has determined their suitability for these positions;

(iv) The RO will be provided sufficient staff and resources to fulfill his or her duties and obligations on behalf of the applicant;

(9) Evidence that the proposed RO and ARO(s) are citizens of the United States or legal permanent residents (e.g. passport, birth certificate);

(10) A completed SEVIS generated Citizenship Certification for the proposed RO and all proposed ARO(s);

(11) An organizational chart which identifies the staff in place to administer the proposed exchange visitor program. If the applicant is currently designated as a sponsor in another category of exchange and the staff is involved with the administration of other exchange programs, identify the staff person, their position/role and the percentage of time spent on each exchange program;

(12) A copy of an on-site inspection report; and

(13) Such additional information or documentation that the Department of State may deem necessary to evaluate the application.

§ 62.6 Designation.

(a) Upon its favorable determination that an applicant meets all statutory and regulatory requirements, the Department of State may, in its sole discretion, designate the applicant as an Exchange Visitor Program sponsor. Initial designations are effective for one or two years at the sole discretion of the Department. The initial designation period for a newly formed organization will be limited to one year.

(b) Designation will confer upon a sponsor the authority to engage in one or more activities specified in § 62.4. A sponsor may engage only in the activity or activities specifically authorized in its written letter of designation.

(c) Designations are not transferable or assignable.

§ 62.7 Redesignation.

(a) A sponsor must file for redesignation no more than six months and no fewer than three months before the designation expiration date as set forth in the sponsor's letter of designation or its most recent letter of redesignation. Failure to apply for redesignation according to this schedule is cause for termination pursuant to § 62.60(g).

(b) A sponsor seeking redesignation as an Exchange Visitor Program sponsor must first complete and submit Form DS–3036 in SEVIS. The complete application must consist of:

(1) A completed copy of Form DS–3036, signed by the sponsor's Chief Financial Officer, President or equivalent;

(2) Required supporting documentation and certifications as set forth herein; and

(3) Confirmation of payment of the required non-refundable fee through pay.gov as set forth in § 62.17.

(c) The complete application must include the following supporting documentation and certifications:

(1) A copy of the sponsor's most recent ''on-site'' inspection, if required by the Department of State;

(2) A current Business Information Report from Dun & Bradstreet on the sponsor;

(3) A list of all third parties (foreign and domestic) with whom the sponsor has executed a written agreement for the person or entity to act on behalf of the sponsor in the conduct of the sponsor's exchange visitor program and, if requested by the Department of State, a separate certification that the sponsor has obtained a Dun & Bradstreet Business Information Report for each third party. The list should include the name of the third party organization, address of the third party organization, purpose for agreement, and contact information;

(4) A copy of the most recent year-end financial statements;

(5) A copy of the most recent letter of accreditation if the sponsor is a secondary or post-secondary academic institution;

(6) A list of the names, addresses and citizenship of the current members of its Board of Directors or the Board of Trustees or other like body, vested with the management of the organization or partnership, and/or the percentage of stocks/shares held, as applicable;

(7) For a non-profit organization, a signed copy of the sponsor's most recent Form 990 filed with the Internal Revenue Service; and

(8) Such additional information or documentation that the Department of State may request.

(9) A statement signed by the Chief Executive Officer, President, or equivalent certifying that the sponsor has completed a criminal background check on the RO and all AROs and has determined their suitability for these positions;

(10) Such additional information or documentation that the Department of State may deem necessary to evaluate the application.

(d) Upon its favorable determination that a sponsor meets all statutory and regulatory requirements, the Department of State may, in its sole discretion, redesignate the organization as an Exchange Visitor Program sponsor for one or two years.

§ 62.8 General program requirements.

(a) *Size of program.* A sponsor, other than a Federal Government agency, must have no fewer than five actively participating exchange visitors during the annual reporting cycle (e.g., academic, calendar or fiscal) as stated in its letter of designation or redesignation. The Department of State may, in its sole discretion and for good cause shown, waive this requirement.

(b) *Minimum duration of program.* A sponsor, other than a Federal Government agency, must provide each exchange visitor, except those sponsored in the short-term scholar category, with a minimum period of participation in the United States of no less than three weeks.

(c) *Reciprocity.* In conducting its exchange visitor program, a sponsor must make a good faith effort to develop and implement, to the fullest extent possible, a reciprocal exchange of persons.

(d) *Cross-cultural activities.* A sponsor must:

(1) Offer or make available to exchange visitors and the accompanying spouse and dependants, if any, a variety of appropriate cross-cultural activities. The extent and type of the cross-cultural activities will be determined by the needs and interests of the particular category of exchange visitor. A sponsor will be responsible for determining the appropriate type and number of such cross-cultural programs. The Department of State encourages sponsors to give their exchange visitors the broadest exposure to American society, culture and institutions; and

(2) Encourage exchange visitors to participate voluntarily in activities that are for the purpose of sharing the language, culture, or history of their home country with Americans, provided such activities do not delay the completion of the exchange visitors' program.

§ 62.9 General obligations of sponsors.

(a) *Adherence to Department of State regulations.* A sponsor is required to adhere to all regulations set forth in this part. A sponsor who willfully or negligently fails to comply will be subject to the sanctions set forth in § 62.50 or termination as set forth in § 62.60.

(b) *Legal status.* A sponsor must maintain legal status or its designation will terminate pursuant to § 62.60(e). A sponsor's change in legal status (e.g., from partnership to corporation, non-profit to for-profit) requires the submission of a new application for designation of the successor legal entity within 45 days of the change in legal status.

(c) *Accreditation and licensure.* A sponsor must remain in compliance with all local, State, and Federal laws, and professional requirements necessary to carry out the activities for which it is designated, including accreditation and licensure, if applicable.

(d) *Representations and disclosures.* A sponsor must:

(1) Provide accurate and complete information, to the extent lawfully permitted, to the Department of State and the Department of Homeland Security regarding its exchange visitor program, exchange visitors, and accompanying spouse and dependants (if any);

(2) Provide accurate information to the public when advertising its exchange visitor program(s) or responding to public inquiries;

(3) Provide informational materials to prospective exchange visitors, and host families, if applicable, that clearly explain the activities, costs, conditions, and restrictions of its exchange visitor program(s);

(4) Not use the program number(s) assigned by the Department of State at time of designation on any advertising materials or publications intended for general circulation, including sponsor Web sites; and

(5) Not represent that its exchange visitor program is endorsed, sponsored, or supported by the Department of State or the U.S. Government, except for U.S. Government sponsors or exchange visitor programs financed directly by the U.S. Government to promote international educational exchanges. A sponsor may, however, represent that it is designated by the Department of State as a sponsor of an exchange visitor program.

(e) *Financial responsibility.* (1) A sponsor must maintain the financial capability to meet at all times its financial obligations and responsibilities attendant to successful sponsorship of its exchange visitor program.

(2) The Department of State may require a non-government sponsor to provide evidence satisfactory to the Department that funds necessary to fulfill all obligations and responsibilities attendant to sponsorship of its exchange visitor program are readily available and in the sponsor's control, including such supplementary or explanatory financial information as the Department may deem appropriate.

(3) The Department of State may require a non-government sponsor to secure a payment bond in favor of the Department guaranteeing all financial obligations arising from the sponsorship of its exchange visitor program.

(f) *Staffing and support services.* A sponsor must ensure that:

(1) Adequate staffing and sufficient support services are provided to administer its exchange visitor program; and

(2) Its employees, officers, agents, independent contractors, third parties, volunteers or other individuals associated with the administration of its exchange visitor program are adequately qualified, appropriately trained, and comply with the Exchange Visitor Program regulations and immigration laws pertaining to the administration of its exchange visitor program(s).

(g) *Appointment of Responsible Officers and Alternate Responsible Officers.* (1) A sponsor must appoint a RO and a minimum of one (1) or a maximum of ten (10) AROs to assist the RO in performing the duties set forth at § 62.11. A sponsor must ensure that the potential RO and AROs have undergone a criminal background check to determine their suitability for these positions. ROs and AROs must be citizens of the United States or legal permanent residents.

(2) ROs and AROs must be employees or officers of the designated sponsor. Upon written sponsor request, the Department of State may, in its sole discretion, authorize the appointment of an individual who is not an employee or officer to serve as an ARO.

(3) In the event of the departure of a RO or ARO, the sponsor must file a request for the approval of a replacement in SEVIS and forward the required documentation to the Department of State within ten (10) calendar days from the date of the RO's or ARO's departure.

(4) Requests to replace the RO or add an ARO must be submitted in SEVIS and a signed Form DS–3037 mailed to the Department of State with the required completed Citizenship Certification, along with certification that the individual has undergone a criminal background check.

(5) The Department of State reserves the right, in its sole discretion, to deny the appointment of an RO or ARO.

§ 62.10 Program administration.

A sponsor is responsible for the effective administration of its exchange visitor program(s). These responsibilities include:

(a) *Selection of exchange visitors.* A sponsor must establish and utilize a method to screen and select prospective exchange visitors to ensure that they are eligible for program participation, and that:

(1) The program is suitable to the exchange visitor's background, needs, and experience; and

(2) The exchange visitor possesses sufficient proficiency in the English language as measured by an objective measurement of English language proficiency to participate successfully in his or her exchange visitor program.

(b) *Pre-arrival information.* A sponsor must provide exchange visitors with pre-arrival materials including, but not limited to, information on:

(1) The purpose of the Exchange Visitor Program;

(2) The home-country physical presence requirement (e.g., section 212(e) of the Immigration and Nationality Act, as amended, 8 U.S.C. 1182, set forth substantially at 22 CFR 41.63);

(3) Travel and entry into the United States (e.g., procedures to be followed by exchange visitors and accompanying spouse and dependants, if any, in obtaining a visa for entry to the United States, paying the SEVIS fee, procedures for obtaining a visa including the information/documentation needed for the interview; travel arrangements to the United States, what to expect at the port of entry, including the necessity of having and presenting their travel documents at the port of entry);

(4) Housing;

(5) A breakdown of all fees to be paid by potential exchange visitors (i.e., paid to the sponsor or a third party);

(6) Other costs that the exchange visitor will likely incur (e.g., insurance, living expenses, transportation expenses) while in the United States;

(7) Health care and insurance requirements for exchange visitors and their accompanying spouse and dependants, as applicable; and

(8) Arrival notification requirements. Procedures exchange visitors, spouses and dependants are to follow upon entry into the United States in reporting their arrival to the sponsor and reporting to the location of their program.

(9) Other information that will assist exchange visitors to prepare for their stay in the United States (e.g., how and when to apply for a social security number, if applicable; how to apply for a driver's license; how to open a bank account; how to remain in lawful non-immigrant status).

(c) *Orientation.* A sponsor must offer an appropriate orientation for all exchange visitors. Sponsors are encouraged to provide orientation for the exchange visitor's immediate family, especially for those exchange visitors who are expected to be in the United States for more than one year. Orientation must include, but is not limited to, information concerning:

(1) Life and customs in the United States;

(2) Local community resources (e.g., public transportation, medical centers, schools, libraries, recreation centers, and banks), to the fullest extent possible;

(3) Available healthcare, emergency assistance, and health insurance coverage;

(4) A description of the exchange visitor program in which the exchange visitor is participating (e.g., information on the length and location of the program, a summary of the significant components of the program, and any stipend (payment or wage) an exchange visitor will receive);

(5) Sponsor rules that the exchange visitors are required to follow while participating in their exchange visitor program;

(6) Name and address of the sponsor and the name, e-mail address and telephone number of the RO and ARO(s);

(7) The Department of State's Office of Designation's address, telephone number, facsimile number, Web site and e-mail address, and a copy of the Exchange Visitor Program brochure or other Department materials as appropriate or required; and

(8) The requirement that an exchange visitor must promptly report to the sponsor or sponsor designee any changes in his or her telephone number, email address, actual and current U.S. address, and site of activity (if permitted to change without sponsor authorization).

(d) *Monitoring of exchange visitors.* A sponsor must monitor, through its employees, officers, agents, or third

parties, the exchange visitor's participation in its exchange visitor program(s). A sponsor must:

(1) Ensure that the activity in which the exchange visitor is engaged is consistent with the category and activity listed on the exchange visitor's Form DS–2019;

(2) Monitor the physical location (site of activity), and the progress and welfare of the exchange visitor to the extent appropriate for the category;

(3) Require that exchange visitors report to the sponsor within ten (10) calendar days, any changes in their telephone numbers, e-mail addresses, actual and current U.S. addresses (e.g., physical residence), and site(s) of activity address (if permitted to change without sponsor authorization);

(4) Report in SEVIS within ten (10) calendar days of notification by an exchange visitor any change in the exchange visitor's actual and current U.S. address, telephone number, email addresses, and/or primary site of activity (if the exchange visitor is permitted) to make such change without prior sponsor authorization;

(5) Report the actual and current U.S. address and email address for each accompanying spouse and dependants.

(6) Report Employment Authorization Document (EAD) information in SEVIS for the accompanying spouse and each dependant, if applicable, by entering the EAD number, validation and expiration dates as issued by the Department of Homeland Security.

(e) *Requests by the Department of State.* A sponsor must, to the extent lawfully permitted, furnish the Department within a reasonable time all information, reports, documents, books, files, and other records or information requested by the Department on all matters related to its exchange visitor program. All submissions relative to a request must contain the sponsor's program number.

(f) *Inquiries and investigations.* A sponsor must cooperate with any inquiry or investigation that may be undertaken by the Department of State or the Department of Homeland Security.

(g) *Retention of records.* A sponsor must retain all records related to its exchange visitor program and its participants (to include accompanying spouse and dependants, if any) for a minimum of three years following the completion of each participant's exchange visitor program.

§ 62.11 Duties of Responsible Officers and Alternate Responsible Officers.

The RO must train and supervise AROs and ensure that these officials are in compliance with the Exchange Visitor Program regulations. ROs and AROs must:

(a) Be thoroughly familiar with the Exchange Visitor Program regulations, relevant immigration laws and all Federal and State regulations pertaining to the administration of its exchange visitor program(s), including the Department of State's and the Department of Homeland Security's policies, manuals, instructions, guidance and SEVIS operations relevant to the Exchange Visitor Program;

(b) Ensure that the exchange visitor obtains sufficient advice and assistance to facilitate the successful completion of his or her exchange visitor program;

(c) Conduct all official communications relating to their sponsor's exchange visitor program with the Department of State and the Department of Homeland Security. A sponsor must include its exchange visitor program number on all correspondence submitted to the Department of State and to the Department of Homeland Security;

(d) Ensure that sponsor spam filters do not block reception of SEVIS or Department of State and Department of Homeland Security notices; and

(e) Control and issue Forms DS–2019 as set forth in § 62.12.

§ 62.12 Control of Forms DS–2019.

(a) *Issuance of Forms DS–2019.* A sponsor must:

(1) Ensure that only the RO and AROs have access to SEVIS;

(2) Ensure that information input into SEVIS is accurate, current, and updated pursuant to regulations herein; and

(3) Issue Forms DS–2019 only for the following authorized purposes:

(i) To facilitate the initial entry of the exchange visitor and accompanying spouse and dependants, if any, into the United States;

(ii) To extend the duration of participation of an exchange visitor, when permitted by the regulations;

(iii) To facilitate program transfers, when permitted by the regulations and/or authorized in writing by the Department of State;

(iv) To replace lost, stolen, or damaged Forms DS–2019;

(v) To facilitate the re-entry of an exchange visitor and accompanying spouse and dependants, if any, who travel outside the United States during the exchange visitor's program;

(vi) To facilitate a change of category, when permitted by the Department of State;

(vii) To update information when significant changes take place in regard to the exchange visitor's program (*e.g.*, a substantial change in funding or a change in the primary site of activity or actual and current U.S. address);

(viii) To facilitate the correction of a minor or technical infraction; or

(ix) To facilitate a ''reinstatement'' or a ''reinstatement update SEVIS status'' when permitted by the Department of State.

(b) *Verification.* (1) Prior to issuing Forms DS–2019, a sponsor must verify that each prospective exchange visitor:

(i) Is eligible, qualified, and accepted for the program in which he or she will participate (*e.g.*, has an offer letter from a camp, a written acceptance from a secondary school);

(ii) Possesses adequate financial resources to participate in and complete his or her exchange visitor program; and

(iii) Possesses adequate financial resources to support an accompanying spouse and dependants, if any.

(2) The sponsor must ensure that:

(i) Only the RO or ARO who is physically present in the United States or in a U.S. territory may print and sign Forms DS–2019; and

(ii) Only the RO or ARO whose name is printed on the Form DS–2019, is permitted to sign the document. The Form DS–2019 must be signed in blue ink to denote that it is the original document.

(iii) Sponsors for whom the RO or AROs have been found to have violated the requirements of this section will be subject to sanctions as set forth in § 62.50(a)(2).

(c) *Distribution of Forms DS–2019.* The sponsor must ensure that completed Forms DS–2019 are distributed directly to the exchange visitor and accompanying spouse and dependants, if any, (or to an individual designated by the exchange visitor) only via the sponsor's employees, officers, agents, independent contractors, third parties, volunteers, or other individuals acting on behalf of the sponsor in the administration of its exchange visitor program.

(d) *Allotment requests.* (1) Annual Form DS–2019 allotment. A sponsor must submit an electronic request via SEVIS to the Department of State for an annual allotment of Forms DS–2019 based on the annual reporting cycle (*e.g.*, academic, calendar or fiscal year) stated in its letter of designation or redesignation. A sponsor should allow up to four weeks for the processing of the allotment request. The Department has the sole discretion to determine the number of Forms DS–2019 to be issued to a sponsor.

(2) Expansion of Program. A request for program expansion must include information such as, but not limited to,

the source of program growth, staff increases, confirmation of adequately trained employees, current financial information, additional overseas affiliates, and explanations of how the sponsor will accommodate the anticipated program growth. The Department of State will take into consideration the current size of a sponsor's program and the projected expansion of the program in the coming 12 months and may consult with the RO and/or ARO prior to determining the number of Forms DS–2019 to issue to a sponsor.

(e) *Safeguards and controls.* (1) ROs and AROs must secure their SEVIS logon Identification Numbers (IDs) and passwords at all times (*i.e.*, not share IDs and passwords with any other person). Sponsors whose ROs or AROs have been found to have willfully or negligently violated the requirements of this section will be subject to sanctions as set forth in § 62.50(a).

(2) A sponsor, its employees, officers, agents, or other third parties acting on behalf of the sponsor, may not forward to any unauthorized party (via facsimile or other electronic means) copies or Portable Document Formats (PDFs) of signed or unsigned Forms DS–2019. However, a sponsor must forward such copies and/or PDFs to the Department of State or the Department of Homeland Security upon request.

(3) A sponsor must use the reprint function in SEVIS in the event the exchange visitor's Form DS–2019 has been lost or stolen.

(4) Destroy damaged and unusable Form DS–2019 on the sponsor's premises after making a record of such forms (*e.g.*, forms with errors or forms damaged by a printer).

(5) Request exchange visitors and prospective exchange visitors to return any unused Form DS–2019 sent to them.

§ 62.13 Notification requirements.

(a) *Valid program status of exchange visitor.* A sponsor must notify the Department of State via SEVIS of the following:

(1) Validation of program participation. A sponsor must promptly validate an exchange visitor's participation in his or her program. This will change the status of the exchange visitor's SEVIS record from ''Initial'' to ''Active.'' SEVIS records with program durations of 30 days or more (*e.g.*, the period between the ''Program Begin Date'' to ''Program End Date'') must be validated within 30 days following the ''Program Begin Date'' identified in SEVIS. SEVIS records with program durations that are less than 30 days must be validated prior to the ''Program End Date'' reflected in SEVIS. Prior to validation, a sponsor may amend the program start date and must update the SEVIS record to reflect the actual and current U.S. address and site of activity in SEVIS. The status of SEVIS records that are not validated according to this schedule will automatically change to ''Invalid'' or ''No Show''.

(2) Failure of exchange visitor to begin program. A sponsor must report in SEVIS, no later than 30 calendar days after the ''Program Begin Date'' listed in SEVIS, the failure of an exchange visitor to report to his or her sponsor upon entry in the United States (*i.e.*, failure of exchange visitor to begin an exchange visitor program as scheduled). This will change the status of the exchange visitor's SEVIS record from ''Initial'' to ''No Show''.

(3) End of exchange visitor's program. A sponsor must report in SEVIS any withdrawal from or early completion of an exchange visitor's program that occurs prior to the ''Program End Date'' listed in SEVIS on the exchange visitor's Form DS–2019. The sponsor must not alter the ''Program End Date'' field, but should enter the date of program completion in the ''Effective Date of Completion'' field. This will change the status of the exchange visitor's SEVIS record from ''Active'' to ''Inactive.'' Such notification in SEVIS ends a sponsor's programmatic obligations to the exchange visitor and/or his or her accompanying spouse and dependants.

(4) Accompanying spouse and dependant records. A sponsor must report in SEVIS if an accompanying spouse and/or dependants depart from the United States prior to the exchange visitor's departure date.

(5) Termination of an exchange visitor's program. A sponsor must promptly report in SEVIS the involuntary termination of an exchange visitor's program. The sponsor must not alter the ''Program End Date'' field, but should enter the date of program termination in the ''Effective Date of Termination'' field. This will change the status of the SEVIS record from ''Active'' to ''Terminated''. Such notification in SEVIS ends a sponsor's programmatic obligation to the exchange visitor and spouse and dependants, if any, and prevents the sponsor from thereafter extending the exchange visitor's duration of participation, transferring the exchange visitor to another program, or changing the exchange visitor's category. Sponsors must not terminate the program of an exchange visitor who voluntarily ends his or her program.

(b) *Change of circumstance of an exchange visitor.* A sponsor must promptly notify the Department of State via SEVIS of any of the following circumstances:

(1) Change in the actual and current U.S. address. A sponsor must ensure that the actual and current U.S. addresses of an exchange visitor are reported in SEVIS:

(i) A sponsor must update the actual and current U.S. address information in SEVIS for an exchange visitor within 10 days of being notified by an exchange visitor of a change in address. A sponsor who is responsible for the placement or housing of such exchange visitors must promptly update a change in the actual and current U.S. address in SEVIS;

(ii) A sponsor must report the U.S. mailing address (*i.e.*, provide a P.O. Box number) in SEVIS in those limited cases where mail cannot be delivered to the exchange visitor's actual and current U.S. address (*e.g.*, the exchange visitor resides in a campus setting);

(iii) If a U.S. mailing address is reported to SEVIS, a sponsor must also maintain records in SEVIS of actual and current U.S. addresses (*e.g.*, dormitory, building and room number) for such exchange visitors; and

(iv) Failure to update the actual and current U.S. addresses of their exchange visitors as required, may be grounds for revocation of a sponsor's exchange visitor program designation, as set forth in § 62.50(a).

(2) Change in site of activity. A sponsor must report in SEVIS any change to an exchange visitor's site of activity by entering the new site within ten (10) calendar days of notification of such a change where sponsor rules or regulations permit such a change. A sponsor must promptly enter any change in the site of activity in those instances where the sponsor is responsible for the placement. A sponsor must identify the ''primary'' site of activity of an exchange visitor if multiple sites of activity are reported in SEVIS.

(c) *Change in sponsor's circumstance.* A sponsor must report within ten (10) days in SEVIS or directly to the Department of State, if appropriate, any material changes to its exchange visitor program as follows:

(1) Change of business and/or mailing address, telephone number, facsimile number, or e-mail address;

(2) Change in the composition of the sponsor organization that affects its U.S. citizenship status as defined in § 62.2;

(3) Change of RO or ARO;

(4) Major change of ownership or control of the sponsor's organization as defined in § 62.60(e);

(5) Change of the sponsor's principal place of business to a location outside the United States;

(6) Change in financial circumstances that may render the sponsor unable to comply with its obligations as set forth in § 62.9(e);

(7) Loss of licensure or accreditation;

(8) Loss or theft of Forms DS–2019, in which case a sponsor must notify the Department of State promptly by telephone (confirmed promptly in writing by facsimile or e-mail) of the SEVIS identification numbers of such Forms DS–2019 that have been lost or stolen;

(9) Any litigation related to a sponsor's exchange visitor program, in which the sponsor or an exchange visitor is a named party;

(10) A decision by the sponsor to voluntarily cancel (withdraw) its exchange visitor program designation; or,

(11) Any other material facts or events that may have an impact on the sponsor's ability to properly administer or conduct its exchange visitor program.

(d) *Serious problem or controversy.* A sponsor must inform the Department of State on or before the next business day by telephone (confirmed promptly in writing by facsimile or e-mail) of any serious problem or controversy which could be expected to bring the Department, the Exchange Visitor Program or the sponsor's exchange visitor program into notoriety or disrepute.

§ 62.14 Insurance.

(a) A sponsor must require that all exchange visitors and their spouse and dependants, if any, have insurance in effect that covers the exchange visitors for sickness or accidents during the period of time that they participate in the sponsor's exchange visitor program. A sponsor may offer insurance, but is not required, to ensure that exchange visitors have ''entry to exit'' coverage. The period of required coverage is the actual duration of the exchange visitor's participation in the sponsor's exchange visitor program, Minimum coverage must provide:

(1) Medical benefits of at least $200,000 per accident or illness;

(2) Repatriation of remains in the amount of $25,000;

(3) Expenses associated with the medical evacuation of exchange visitors to his or her home country in the amount of $50,000;

(4) Deductibles not to exceed $500 per accident or illness; and

(5) Dental insurance in the amount of $10,000.

(b) Insurance policies secured to fulfill the requirements of this section:

(1) May require a waiting period for pre-existing conditions that is reasonable as determined by current industry standards;

(2) May include provisions for co-insurance under the terms of which the exchange visitor may be required to pay up to 25% of the covered benefits per accident or illness; and

(3) Must not unreasonably exclude coverage for perils inherent to the activities of the exchange program in which the exchange visitor participates.

(c) Any policy, plan, or contract secured to fill the above requirements must, at a minimum, be:

(1) Underwritten by an insurance corporation having an A.M. Best rating of ''A–'' or above; an Insurance Solvency International, Ltd. (ISI) rating of ''A–i'' or above; a Standard & Poor's Claims-paying Ability rating of ''A–'' or above, a Weiss Research, Inc. rating of B+ or above, or such other rating as the Department of State may from time to time specify; or

(2) Backed by the full faith and credit of the government of the exchange visitor's home country; or

(3) Part of a health benefits program offered on a group basis to employees or enrolled students by a designated sponsor; or

(4) Offered through or underwritten by a federally qualified Health Maintenance Organization or eligible Competitive Medical Plan as determined by the Health Care Financing Administration of the U.S. Department of Health and Human Services.

(d) Federal, State or local government agencies; State colleges and universities; and public community colleges may, if permitted by law, self-insure any or all of the above-required insurance coverage.

(e) At the request of a non-governmental sponsor of an exchange visitor program, and upon a showing that such sponsor has funds readily available and under its control sufficient to meet the requirements of this section, the Department of State may permit the sponsor to self-insure or to accept full financial responsibility for such requirements.

(f) The Department of State may, in its sole discretion, condition its approval of self-insurance or the acceptance of full financial responsibility by the non-governmental sponsor by requiring such sponsor to secure a payment bond in favor of the Department guaranteeing the sponsor's obligations hereunder.

(g) An accompanying spouse and/or dependant is required to be covered by insurance in the amounts set forth in paragraph (a) of this section. A sponsor must inform exchange visitors of this requirement, in writing, in advance of the exchange visitor's arrival in the United States.

(h) An exchange visitor who willfully fails to maintain the insurance coverage set forth above while a participant in an exchange visitor program or who makes material misrepresentations to the sponsor concerning such coverage will be deemed to be in violation of these regulations and will be subject to termination as a participant.

(i) A sponsor must terminate an exchange visitor's participation in its program if the sponsor determines that the exchange visitor or any accompanying spouse or dependant willfully fails to remain in compliance with this section.

§ 62.15 Reporting requirements.

Sponsors must submit an annual report to the Department of State which is to be generated through SEVIS. Such report must be filed on an academic, calendar or fiscal year basis, as directed the Department of State, and must contain the following:

(a) Program report and evaluation. A brief summary of the activities in which exchange visitors were engaged, including an evaluation of program effectiveness;

(b) Reciprocity. A description of the nature and extent of reciprocity occurring in the sponsor's exchange visitor program during the reporting year;

(c) Cross-cultural activities. A summary of the cross-cultural activities provided for its exchange visitors during the reporting year;

(d) Proof of insurance. Certification of compliance with insurance coverage requirements set forth in 62.14.

(e) Certification. All annual reports must include the following certification:

''I have reviewed this report of my organization's operation of a Department of State designated exchange visitor program and hereby certify that adequate staff and resources are devoted to the administration and oversight of this program and that internal controls adequate to ensure regulatory compliance are in place.''

(1) For exchange visitor programs classified as ''Government Programs,'' this certification will be signed by RO.

(2) For exchange visitor programs classified as P–1 or P–2 ''Academic Programs,'' this certification will be signed by the institution's Chief Financial Officer.

(3) For exchange visitor programs classified as P–3 and P–4 ''Private Sector Programs,'' this certification will be signed by the organization's Chief

Financial Officer. In addition to the Annual Report required above, all P–3 and P–4 ''Private Sector'' programs must file a program specific management audit (in a format approved by the Department of State).

(f) Program participation. A numerical count, by category, of all exchange visitors participating in the sponsor's program for the reporting year (active status).

§ 62.16 Employment.

(a) An exchange visitor may receive compensation from the sponsor or the sponsor's appropriate designee for employment when such activities are part of the exchange visitor's program.

(b) An exchange visitor who engages in unauthorized employment shall be deemed to be in violation of his or her program status and is subject to termination as a participant in an exchange visitor program.

(c) The acceptance of employment by an accompanying spouse or dependant of an exchange visitor is governed by Department of Homeland Security regulations. An exchange visitor must report to his or her sponsor the Employment Authorization Document (EAD) number and the validation and expiration dates of the authorized period of employment for any accompanying spouse and each dependant. As required by 62.10(d)(6), sponsors must report accompanying spouse and dependant EAD information in SEVIS.

Dated: December 4, 2008.

Stanley S. Colvin,

Deputy Assistant Secretary, Office of Private Sector Exchange, Bureau of Educational and Cultural Affairs, Department of State.

[FR Doc. E8–29213 Filed 12–9–08; 8:45 am]

BILLING CODE 4710–05–P

DEPARTMENT OF HEALTH AND HUMAN SERVICES

42 CFR Part 84

RIN 0920–AA10

Approval Tests and Standards for Closed-Circuit Escape Respirators; Notice of Proposed Rulemaking

AGENCY: Centers for Disease Control and Prevention (CDC).

ACTION: Notice of proposed rulemaking.

SUMMARY: This notice proposes updated requirements that the Department of Health and Human Service's (HHS), Centers for Disease Control and Prevention's (CDC) National Institute for Occupational Safety and Health (NIOSH) would employ to test and approve closed-circuit respirators used for escaping atmospheres considered to be immediately dangerous to life and health, including such respirators required by the Mine Safety and Health Administration (MSHA) for use in underground mines. NIOSH and MSHA jointly review and approve this type of respirator used for mine emergencies under 42 CFR pt. 84, Approval of Respiratory Protective Devices. NIOSH also approves these respirators used in other work environments where escape equipment may be provided to workers, such as vessels operated by U.S. Navy and Coast Guard personnel. The proposed rule would replace only those technical requirements in 42 CFR Part 84—Subpart H that are uniquely applicable to closed-circuit escape respirators (CCERs), a subset of the variety of escape respirators presently covered by Subpart H. All other applicable requirements of 42 CFR Part 84 would remain unchanged. The purpose of these updated requirements is to enable NIOSH and MSHA to more effectively ensure the performance, reliability, and safety of CCERs.

DATES: CDC invites comments on this proposed rule from interested parties. Comments must be received by February 9, 2009.

ADDRESSES: You may submit comments, identified by RIN: 0920-AA10, by any of the following methods:

- *Federal eRulemaking Portal: http://www.regulations.gov.* Follow the instructions for submitting comments.
- *E-mail: niocindocket@cdc.gov.* Include ''RIN: 0920–AA10'' and ''42 CFR pt. 84'' in the subject line of the message.
- *Mail:* NIOSH Docket Office, Robert A. Taft Laboratories, MS–C34, 4676 Columbia Parkway, Cincinnati, OH 45226.

Instructions: All submissions received must include the agency name and docket number or Regulatory Information Number (RIN) for this rulemaking, RIN: 0920–AA10. All comments received will be posted without change at the NIOSH docket Web page: *http://www.cdc.gov/niosh/docket*, including any personal information provided. For detailed instructions on submitting comments and additional information on the rulemaking process, see the ''Public Participation'' heading of the **SUPPLEMENTARY INFORMATION** section of this document. Background information on this rulemaking is available at the NIOSH Web page: *http://www.cdc.gov/niosh/npptl.*

FOR FURTHER INFORMATION CONTACT: Tim Rehak, NIOSH National Personal Protective Technology Laboratory (NPPTL), Pittsburgh, PA, (412) 386–6866 (this is not a toll-free number). Information requests can also be submitted by e-mail to *niocindocket@cdc.gov.*

SUPPLEMENTARY INFORMATION:

I. Public Participation

Interested persons or organizations are invited to participate in this rulemaking by submitting written views, arguments, recommendations, and data. Comments are invited on any topic related to this proposal.

Comments submitted by e-mail or mail should be titled ''Docket #005 Public Comments'', addressed to the ''NIOSH Docket Officer'', and identify the author(s), return address, and a phone number, in case clarification is needed. Comments can be submitted by e-mail to *niocindocket@cdc.gov* as e-mail text or as a Word or Word Perfect file attachment. Printed comments can be sent to the NIOSH Docket Office at the address above. All communications received on or before the closing date for comments will be fully considered by CDC.

All comments submitted will be available for examination in the rule docket (a publicly available repository of the documents associated with the rulemaking) both before and after the closing date for comments. A complete electronic docket containing all comments submitted will be available after the closing date at *http://www.cdc.gov/niosh/docket.* Comments will also be made available in writing upon request. NIOSH includes all comments received without change in the docket, including any personal information provided.

II. Background

A. Introduction

A closed-circuit escape respirator (CCER) technically defined as a closed-circuit, self-contained breathing apparatus (SCBA) used for escape, is used in certain industrial and other work settings during emergencies to enable users to escape from atmospheres that can be immediately dangerous to life and health. The CCER, known in the mining industry as a self-contained self-rescuer (SCSR), is primarily used by miners to escape dangerous atmospheres in mines. It is also used by certain Navy personnel, such as crews working below decks on vessels, to escape dangerous atmospheres. To a lesser extent, it is also used by other industries involved in working

underground or in confined spaces, such as tunneling operations in the construction industry and in the maritime industry.

CCERs are commonly worn on workers' belts or stored in close proximity to be accessible in an emergency. They are relatively small respirators, typically the size of a water canteen, that employ either compressed oxygen or a chemical source of oxygen, plus a chemical system for removing exhaled carbon dioxide from the breathing circuit. Users re-breathe their exhalations after the oxygen and carbon dioxide levels have been restored to suitable levels, which distinguishes these ''closed-circuit'' respirators from ''open-circuit'' respirators, which vent each exhalation. The total capacity for oxygen supply and carbon dioxide removal vary by respirator model to address different work and escape needs. The greater the oxygen supply capacity of a respirator, the larger the respirator size and the less practical or comfortable it might be to wear during work tasks. Current models are encased in hard, water-resistant cases to protect the respirators from damage by impact, puncture, or moisture.

B. Certification of CCERs

NIOSH certifies CCERs under 42 CFR pt. 84, Approval of Respiratory Protective Devices. NIOSH and MSHA jointly review and approve such respirators for use by miners to escape hazardous atmospheres generated during emergencies in underground coal mines.[1] In those regulations, Subpart H, Self-Contained Breathing Apparatus, specifies testing and certification requirements for these respirators, identified in the regulations as closed-circuit apparatus for ''escape only.'' The subpart also specifies requirements for other related, but distinct, types of respirators, including open-circuit escape respirators and respirators (closed- and open-circuit) used by rescuers responding to an emergency (''entry'' and ''entry and escape'' apparatus); none of those other types of respirators are covered by this rulemaking.

C. Need for Rulemaking

Storage of CCERs in harsh environmental conditions, such as extreme heat, cold, and humidity, and the daily wearing of the respirators during physical work and on and around vibration-generating equipment and tools, can result in damage that degrades the respirators' performance, despite their protective cases. NIOSH field evaluations of certified CCERs conducted systematically and in response to the concerns of users have identified damaged respirators that failed to meet the performance criteria under which they were certified.[2] In some instances, the designs of these respirators did not allow the user or employer to evaluate the condition of a particular respirator prior to its use in either an evacuation drill or an actual emergency. In response to the problems identified, respirator manufacturers have made design improvements to allow persons to check for certain types of damage. However, such checks are not governed by current regulations and do not exist in some of the respirators currently available.

Furthermore, current performance testing requirements for CCERs rely on a non-uniform testing regime, which does not control for differences between human subjects involved in the testing. This can produce variation in test results. The proposed improvements would establish a consistent testing regimen for evaluating the life support capability of CCERs.

Finally, the current certification requirements might be contributing to a risk communication and risk management problem. NIOSH is currently required to approve these respirators as providing protection for a specific duration[3] applicable to the particular class of respirator. Durations may be misleading to employers and users, however, because the duration for which a respirator will provide effective protection in the workplace, versus in laboratory testing, will depend on the body weight and physical condition of the user and on the amount of exertion required by the escape. The heavier and less physically fit the user and the greater the exertion, the more rapidly the user will consume the limited oxygen supply and exhale carbon dioxide into the unit; the faster this is done, the greater the likelihood that the exhaled carbon dioxide will accumulate excessively within the user's breathing zone, making breathing intolerable.

Since 1982, NIOSH has received reports of incidents in which users purportedly have not received the duration of protection implied by the certification. While such incidents could have resulted from the respirator failing to perform as certified, they might also reflect limitations of understanding about the testing criteria regarding duration.

This rulemaking proposes to eliminate the duration-specific approval, replacing it with a capacity rating system based on the quantity of usable oxygen supplied by the model. NIOSH would also assist MSHA and other agencies to foster the use of effective practices by which employers can select the model of certified respirator best suited to the physical sizes of their employees and the particular escape contingencies their employees might encounter. Effective practices would include selecting a maximum capacity model of CCER or empirically testing different models in simulated escapes to determine which models provide an adequate breathing supply and are suitable in terms of other practical concerns.

In addition, over the last several decades, the mining community has encountered various problems with particular CCER designs, some of which could be prevented through additional certification requirements. These issues are identified and addressed in the discussion of the new provisions for testing the safety features and the ''wearability'' of CCERs.

Persons interested in a detailed examination of issues concerning the current use, limitations of, and opportunities for improving CCERs may wish to review the report of an interagency task force led by the Department of Labor, which included representatives from the mining industry, labor, and respirator manufacturers. The report, entitled ''Joint Government, Labor, Industry Task Group on Person Wearable, Self-Contained, Self-Rescuers,'' is available from the NIOSH Web page: *http://www.cdc.gov/niosh/npptl* or upon request to NIOSH.

D. Scope of the Rulemaking

This rulemaking is intended to apply only to CCERs. It would establish new testing and certification requirements for these respirators, replacing all testing and certification requirements of 42 CFR pt. 84, Subpart H, that are uniquely applicable to closed-circuit SCBAs used only for escape. This rulemaking would not alter the testing and certification requirements applicable to the other types of respirators included under Subpart H.

E. Impact on Rulemaking and Other Activities of MSHA

The proposed rule might require MSHA to promulgate limited, non-

[1] See 42 CFR 84.3.

[2] Kyriazi N, Shubilla JP [2002]. Self-contained self-rescuer field evaluation: seventh-phase results. Pittsburgh, PA: U.S. Department of Health and Human Services, Public Health Service, Centers for Disease Control and Prevention, National Institute for Occupational Safety and Health, DHHS (NIOSH) Publication No. 2002–127, RI 9656.

[3] These certifications are defined in four discrete durations ranging from 15 minutes to one hour.

substantive changes to incorporate the terminology of this rule, *i.e.*, ''CCER'' versus ''SCSR,'' and to reflect the new capacity rating system being proposed. As discussed and documented in the summary of the new rating system presented in Section 84.304, the proposed capacity rating of ''Cap 3'' is equivalent to the ''60-minute'' duration rating currently certified by NIOSH and referenced as a requirement in MSHA regulations.[4]

In addition, MSHA would modify relevant MSHA training programs to incorporate the use of respirators approved under the proposed new rating system and the proposed phasing-in of these respirators, discussed under § 84.301.

F. Public Meetings for Discussion and Comment

NIOSH held public meetings to discuss technical issues addressed in this proposed rule in Arlington, Virginia on April 10, 2003, and Golden, Colorado, on April 24, 2003. NIOSH held a second set of public meetings at these two locations on September 19th and September 28th of 2006 respectively, to provide the public with an opportunity to address any new perspectives resulting from Sago and other recent mine disasters.[5] Official transcripts of the meetings are available from the NIOSH Docket Office at the address provided above in the Summary.

NIOSH will convene public meetings to provide stakeholders with an opportunity to provide oral comment on this rulemaking during the comment period. The meetings will be in the vicinities of Washington DC and Denver, CO and are announced in a separate notice in this issue of the **Federal Register**.

III. Summary of Proposed Rule

This proposed rule would establish new requirements for testing and certification of CCERs under a new Subpart O of 42 CFR pt. 84—Approval of Respiratory Protective Devices. The new subpart would replace all current requirements for testing and certification of CCERs found under Subpart H. The following is a section-by-section summary which describes and explains the provisions of the rule. The public is invited to provide comment on any aspect of the proposed rule. The complete, proposed regulatory text for the proposed rule is provided in the last section of this notice.

Subpart O

Section 84.300

This section provides a general description of CCERs as a class of respirator. It is intended to inform the public and to serve as a legal and practical definition for the purposes of the NIOSH and MSHA respirator certification program.

Section 84.301

This section would establish a schedule for phasing-in the implementation of the testing and certification requirements of the proposed rule. A phase-in process would allow respirator manufacturers a reasonable period of time to modify existing CCER designs, if necessary, or to develop entirely new designs that respond to the new testing and certification requirements. It will also ensure that during the interim, there is a constant supply of CCERs approved under the current regulations. Upon promulgation, the new requirements would be immediately applied to all new CCER designs that are submitted for approval. Manufacturers and distributors could continue to sell CCERs with current approvals for up to three years after promulgation of the new requirements. CCERs with current approvals could remain in use or be available for use as approved devices for up to six years after promulgation of the new requirements. The only exception would be for individual units that exceed their manufacturer-designated service life within this time period.

The phase-in period would also substantially reduce the potential economic costs[6] to employers of replacing or retrofitting any respirators that remain in use at their worksite, but do not pass the new certification tests. Designations of service life for currently approved CCERs range from 10 to 15 years.[7] However, these designations do not account for the highly varied conditions of storage and handling of CCERs across different work environments. Through extensive field studies evaluating the condition of CCERs deployed in coal mines, NIOSH and MSHA have found that the actual deployment duration of current CCERs in coal mines tends to be less than designated, due to wear and tear and damaging environmental conditions.[8]

NIOSH is seeking public comment on the proposed phase-in schedule. NIOSH believes this schedule allows sufficient time for the continued use of currently approved devices to ensure a constant, adequate supply while providing substantial incentives to manufacturers for bringing improved technology to market as quickly as possible. The phase-in would also require employers to replace deployed devices, including those with remaining service life, that cannot pass the proposed new requirements within a reasonable transition period. NIOSH expects that newly approved devices would become available soon after the final rule becomes effective since current technology, with relatively minor design improvements, can meet the proposed new requirements. Manufacturers have substantial incentive to bring to market as quickly as possible devices that meet the new requirements since employers are likely to prefer to purchase such devices for their improved performance and to minimize the potential economic costs of the six-year approval limitation in the proposed rule.

NIOSH also seeks public comment on an alternative to the proposed phase-in, which would be to retain the proposed three-year limit on sales of devices approved under the current standard, but eliminate the six-year limit on the approval status of devices purchased after the effective date of the final rule. The argument for this alternative is that employers would be able to use the full service life of devices purchased (which were approved under the current requirements). This would minimize any economic impact of the proposed rule on employers. However, under this alternative, it is conceivable that a substantial number of devices approved under the current requirements could remain deployed in workplaces for as long as 13 to 18 years following the effective date of the final standard, given the current service life range of 10 to 15 years.

NIOSH invites public comment on reasons that it might be unlikely that large numbers of older devices would in fact remain deployed for such an extensive period, particularly in mining. For example, one reason may be that the deployment conditions in mining are

[4] See 30 CFR 75.1714(a).

[5] Notice of these meetings was published in the **Federal Register** on March 20, 2003 (68 FR 13712) and August 31, 2006 (71 FR 51829). NIOSH also sent a letter announcing the meeting to known stakeholders and posted it on the NIOSH Web page: *http://www.cdc.gov/niosh/nppt1*).

[6] See Section IV.A of this preamble for a discussion of these potential economic costs.

[7] One product has a service life of 15 years, but to achieve this service life, it must be reconditioned by the manufacturer at 10 years if stored and at 5 years if carried.

[8] NIOSH evaluations of the physical condition and performance of deployed CCERs are conducted routinely as a quality assurance measure and in response to complaints, concerns, and emergency incidents. The findings of these evaluations are documented in NIOSH internal reports, and actionable findings provide the basis for remedies addressed by NIOSH and the applicant.

especially damaging, as discussed above, making it unlikely that a unit would remained deployed for 13 to 18 years. Second, it is in the interest of employers to provide their employees with the best available protective equipment; this is especially important in the mining industry, where concerns about the performance of CCERs are particularly salient. Finally, MSHA and OSHA have authority to require employers to provide employees with devices approved under the proposed new requirements, should the agencies determine such a regulatory measure were necessary to assure safe and healthful working conditions. NIOSH believes that none of these reasons provide assurance of a rapid replacement of devices that are not approved under the proposed new requirements. NIOSH lacks adequate information to predict how quickly devices that cannot pass the proposed new requirements would be fully replaced.

Another alternative is establishment of a time-limit different from the proposed six years for the continued use of the CCERs certified under the current requirements. NIOSH seeks public comment on whether to establish a different balance between providing the best possible protective equipment to employees and controlling the potential economic impact on employers of replacing deployed equipment, recognizing that in any case manufacturers will require time to develop and bring new products to market. NIOSH judges that six years represents a reasonable balance between public health and economic concerns, allowing more than half of the service life [9] of devices purchased up to the effective date of the final rule to pass before requiring their replacement (even if they're still operational).

NIOSH also invites comment on an alternative to the proposed phase-in that would allow a specific exception for the Department of Defense (DoD). Under this alternative, for all uses other than for the DoD, the proposed three year limit on sales of devices approved under the current standard would be retained, and would also set the six-year limit on the approval status of devices after the effective date of the final rule. However, this alternative would permit the DoD to use the full service life of devices, which were approved under the current requirements, based on the DoD deployment plan where CCERs are retained in conditions of storage.

NIOSH also seeks public comment specifying and characterizing the particular burden (financial or otherwise), if any, that would be imposed on specific affected parties by the proposed phase-in periods; whether there is an unsupportable or serious burden that would be imposed on any affected parties; and whether there are other interests that NIOSH should consider in deciding this matter.

In seeking public input on the concepts underlying the proposed rule, NIOSH received comments from two respirator manufacturers and a representative of the Navy opposing the six-year limit on the deployment of devices approved under the current requirements. The commenters objected to the imposition of costs that would be incurred by employers who would have to replace deployed devices with remaining service life at the end of the six-year limit. No comment was received objecting to the three-year limit for the sale of devices approved under the current requirements.

Section 84.302

This section specifies the components, attributes, and instructions that would be required to be included with each CCER. Some of these requirements simply continue the current Subpart H requirements, including the requirements for eye protection (paragraph (a)(1)); oxygen storage vessel (paragraph (a)(4)); and general construction (paragraph (b)).

Paragraph (a)(2) would require the manufacturer to include thermal exposure indicators to allow a person to determine whether the unit has been exposed to temperatures that exceed any temperature storage limits specified by the manufacturer. Currently, one manufacturer includes such indicators in response to NIOSH evaluations finding that exceptionally low and high storage temperatures degrade the functionality and performance of certain CCER designs. Adverse effects of low temperature storage on current products are reversible, but high storage temperatures can damage critical internal CCER components, as documented in the manufacturers' Service Life Plans. There must be a means to detect and replace units exposed to such storage conditions.

Paragraph (a)(3) would require the manufacturer to include a means by which a person can detect any damage or alteration of the chemical oxygen storage or chemical carbon dioxide scrubber that could diminish the NIOSH-certified performance of the unit or pose a hazard to the user. These chemical components of CCERs, as presently designed, are susceptible to such degradation.[10] Two manufacturers currently design their CCERs with a means of detecting such damage.

Paragraph (a)(4) maintains an existing requirement under Subpart H that if a CCER includes an oxygen storage vessel, the vessel must be approved by the U.S. Department of Transportation (DOT) under 49 CFR pt. 107: ''Hazardous Materials Program Procedures,'' unless exempted under Subpart B of the DOT regulation.

Paragraph (a)(5) would require the manufacturer to design and construct the protective casing of the CCER to prevent the user from accidentally opening it and to prevent or clearly indicate its prior opening, unless the CCER casing were designed for such openings, for inspection or purposes other than use in an actual escape. These protections are needed because the opening and re-closing of a unit not designed for such operations, and the replacement of parts not intended for replacement, can damage the unit and degrade its performance. NIOSH has investigated circumstances in which units were opened and modified by unauthorized persons, effectually altering the design from the version that received NIOSH testing and certification.[11]

Paragraph (a)(6) would require the manufacturer to include a means to detect the ingress of any water or water vapor that could degrade the performance of the unit, unless the CCER were designed for its casing to be opened for frequent inspection. Because the chemical components of CCERs are especially susceptible to damage or degradation from moisture, the user must be able to readily and reliably check a unit for potential water damage before each work shift.

Paragraph (c) would require manufacturers to construct the CCER to protect the user from inhaling most toxic gases that might occur in a work environment during an escape. To ensure such gases cannot readily penetrate the breathing circuit of the CCER during its use, NIOSH will test the integrity of the CCER breathing circuit by following the gasoline vapor test procedure available from the NIOSH Web page *http://www.cdc.gov/niosh/npptl*. The test will be conducted on a single CCER unit.

[9] See note 7.

[10] Same as footnote 2.

[11] Kyriazi N, Shubilla JP (2000). Self-contained self-rescuer field evaluation: sixth-phase results. Pittsburgh, PA: U.S. Department of Health and Human Services, Public Health Service, Centers for Disease Control and Prevention, National Institute for Occupational Safety and Health, DHHS (NIOSH) Publication No. 2000–128, RI 9451.

The specified gasoline vapor test provides reasonable assurance that the breathing gas supply of the user will be protected from atmospheres that include hazardous vapors possibly associated with escapes from mines and most other enclosed or confined spaces.

The proposed requirement for this testing would not be new. It is included under Subpart H of this part (§ 84.85) for all SCBAs currently approved by NIOSH.

Paragraphs (d) and (e) would require that the design, construction, and materials of CCERs not introduce combustion or other unspecified safety or health hazards.

Paragraph (f) would require manufacturers to provide users with instructions and a service life plan to accompany each unit. These requirements generally reflect current practice. It is important that users receive comprehensive guidance concerning the use and service life of CCERs.

Section 84.303

This section would establish the general testing conditions and requirements for the certification of CCERs.

Paragraph (a) specifies that NIOSH would use the breathing and metabolic simulator tests specified in this subpart for all quantitative evaluations of the performance of a CCER. NIOSH would use human subject tests for qualitative evaluations, which include evaluations of the ''wearability'' of the CCER design (e.g., ergonomic considerations concerning its practical impact on the user's escape).

Breathing and metabolic simulators are mechanical devices that simulate human respiratory functions.[12] They allow for precisely controlled and monitored tests, whereas comparable testing conducted using human subjects on a treadmill involves substantial variability with respect to one or more metabolic parameters. The use of these simulators to evaluate respirator performance has been validated by NIOSH through a series of MSHA peer-reviewed studies over the past 20 years.[13] These studies, which include side-by-side comparisons of respirator testing using three-person panels of human subjects on treadmills against testing using a breathing and metabolic simulator, demonstrate that the simulator replicates the performance of human subjects with respect to all important metabolic variables, including oxygen consumption rate, average rates of carbon dioxide production, ventilation rates, respiratory frequencies, respiratory temperatures (dry- and wet-bulb), and breathing pressures. The advantage of the simulators, as discussed in II.C. of the preamble, is that their performance for all metabolic parameters can be calibrated and replicated, whereas each human test subject performs uniquely, making the testing less repeatable.

Manufacturers and others who would wish to duplicate NIOSH breathing and metabolic simulators in their own testing facilities can obtain technical specifications from NIOSH. General, non-proprietary information on the design and operation of the simulators is also available from the NIOSH Web page: *http://www.cdc.gov/niosh/npptl.*

Paragraph (b) specifies that four stressors would be monitored constantly throughout testing: The average concentrations of inhaled carbon dioxide and oxygen, peak breathing pressures at inhalation and exhalation, and the wet-bulb temperature (the temperature of inhaled breathing gas as sensed by the CCER user's trachea). Paragraph (d) establishes that CCERs must perform within the acceptable ranges of measurement specified in the table below.

TABLE 1—MONITORED STRESSORS AND THEIR ACCEPTABLE RANGES

Stressor	Acceptable range operating average	Acceptable range excursion
Average inhaled CO_2	<1.5%	≤4%.
Average inhaled O_2	>19.5%	≥15%.
Peak Breathing Pressures	$\Delta P \leq 200$ mm H_2O	$-300 \leq \Delta P \leq 200$ mm H_2O.
Wet-bulb temperature[14]	<43 °C	≤50 °C.

The acceptable ranges for inhaled carbon dioxide were determined by physiological testing performed at the Noll Lab for Human Performance Research at Pennsylvania State University. This research showed no disabling physical effects in active men breathing 5 percent carbon dioxide for long periods of time.[15] Decision-making was slightly impaired in some subjects after breathing 4 percent carbon dioxide for one hour. NIOSH has found in the testing of escape respirators that carbon dioxide levels of 1.5 percent can be tolerated for the limited periods for which these devices are designed without any deleterious effect on the test subjects. Therefore, NIOSH would require the CCER to maintain the inhaled levels of carbon dioxide below 4 percent (as a one-minute average) during all testing and below an average of 1.5 percent over the full duration of the test.

The normal, sea-level oxygen content of air is approximately 21 percent. The minimum acceptable operating average of 19.5% for inhaled oxygen that NIOSH would require the CCER to provide over the full duration of the certification tests was determined based on OSHA's respiratory protection standard 29 CFR 1910.134, which establishes a minimum

[12] Kyriazi N (1986). Development of an automated breathing and metabolic simulator. Pittsburgh, PA: U.S. Department of the Interior, Bureau of Mines, IC 9110.

[13] Kyriazi N, Kovac JG, Shubilla JP, Duerr WH, Kravitz J [1986]. Self-Contained Self-Rescuer Field Evaluation: First-Year Results of 5-year Study. Pittsburgh, PA: U.S. Department of the Interior, Bureau of Mines, RI 9051.

Kyriazi N, Shubilla JP [1992]. Self-Contained Self-Rescuer Field Evaluation: Results from 1982–1990. Pittsburgh, PA: U.S. Department of the Interior, Bureau of Mines, RI 9401.

Kyriazi N, Shubilla JP [1994]. Self-Contained Self-Rescuer Field Evaluation: Fourth-Phase Results. Pittsburgh, PA: U.S. Department of the Interior, Bureau of Mines, RI 9499.

Kyriazi N, Shubilla JP [1996]. Self-Contained Self-Rescuer Field Evaluation: Fifth-Phase Results. Pittsburgh, PA: U.S. Department of Energy, RI 9635.

Kyriazi N, Shubilla JP [2000]. Self-Contained Self-Rescuer Field Evaluation: Sixth-Phase Results. Pittsburgh, PA: U.S. Department of Health and Human Services, Public Health Service, Centers for Disease Control and Prevention, National Institute for Occupational Safety and Health, DHHS (NIOSH) Publication No. 2000–128, IC 9451.

Kyriazi N, Shubilla JP [2002]. Self-Contained Self-Rescuer Field Evaluation: Seventh-Phase Results. Pittsburgh, PA: U.S. Department of Health and Human Services, Public Health Service, Centers for Disease Control and Prevention, National Institute for Occupational Safety and Health, DHHS (NIOSH) Publication No. 2002–127, IC 9656.

[14] Wet-bulb temperature is a measurement of the temperature of a wet surface. It represents the temperature of the inhaled breathing gas in the CCER user's trachea.

[15] Kamon E, Deno S, Vercruyyen M [1984a]. Physiological responses of miners to emergency. Vol. 1—Self-contained breathing apparatus stressors. University Park, PA: The Pennsylvania State University. U.S. Bureau of Mines contract No. J0100092, p. 13.

level of oxygen for protecting the health and safety of workers. However, the technology used in CCERs requires NIOSH to permit brief excursions on the oxygen supply to above 15% for up to one minute. The acceptable range for these excursions was determined based on testing of pilots at various altitudes. This research indicates that judgment, reaction time, spatial orientation, and other cognitive processes begin to become impaired from chronic exposure at oxygen levels below 15 percent.[16] Therefore, NIOSH would require the CCER to provide levels of oxygen above 15 percent (as a one-minute average) during all testing and above an average of 19.5 percent over the full duration of the test. These limits would provide assurance that the CCER user would never be prevented from escaping due to an insufficient concentration of oxygen in the breathing gas supplied by the CCER.

The acceptable ranges for wet-bulb[17] temperature are based on physiological research at Pennsylvania State University. Researchers found the highest tolerable wet-bulb temperature of inhaled air was approximately 50 °C.[18] Based on such research and NIOSH findings from testing escape respirators, NIOSH proposes 50 °C as an excursion limit and 43 °C as an average operating requirement. Test subjects have found this temperature to be tolerable during the one-hour certification tests.

The ranges for peak breathing pressures were determined based on physiological research indicating that most individuals can generate peak breathing pressures equaling or exceeding −300 to 200 millimeters of H_2O for only a short period of time.[19] Based on NIOSH findings from testing escape respirators, the 200 millimeter average operating requirement provides a tolerable limit for the duration of an escape. Use of these values as limits will allow most CCER users to escape without any constraint on their level of exertion. Users who cannot generate these pressures may be forced at some point to slow the pace of their escape.

In addition to establishing these stressor limits for testing, this section would provide under paragraph (c) that capacity and performance tests conclude when the stored breathing gas supply has been fully expended. This is important because the adequacy of the performance of a CCER depends upon the user clearly recognizing when the breathing gas supply is expended. High carbon dioxide levels can deceive the user into believing the respirator is not working and hence to prematurely relinquish use of the CCER during an escape. Designing CCERs so that carbon dioxide levels are controlled until the oxygen supply is fully expended will help ensure that a user can make use of all of the available oxygen.

This section also provides under paragraph (d)(2) that a CCER would fail a wearability test if a human subject cannot complete the test for any reason related to the CCER. Any design, construction, or performance attribute of a CCER that prevents a user from completing the wearability test would threaten the successful use of the CCER for an escape.

Section 84.304

This section specifies the testing regime that would be used to rate and quantify the capacity of the CCER, in terms of the volume of oxygen that the respirator provides to the user. It would ensure the CCER provides the certified quantity as a constantly adequate supply of breathing gas, in terms of the stressors addressed in Section 84.303 of this Part. The capacity would be evaluated in terms of the volume of oxygen, in liters, that the CCER effectively delivers for consumption by the user. All volumes are given at standard temperature (0 °C) and pressure (760 mm Hg), dry, unless otherwise noted. This capacity can differ from the volume of oxygen physically or chemically stored by the CCER, some of which may be wasted rather than inhaled by the user, depending on the particular design of the CCER and the work rate of the user. A CCER will operate for a shorter duration when the oxygen consumption rate is high. Hypothetically, a one hundred and ninety pound man, at rest, is estimated to consume a volume of oxygen of .5 liters per minute. If he were walking in an upright position at 3 miles per hour, it is estimated that he could consume 1.18 liters per minute. The same man running in an upright position at 5 miles per hour is estimated to consume 2.72 liters per minute.[20]

A three capacity ratings system would be established: ''Cap 1–Cap 3''. Cap 1 provides 20 to 59 liters of oxygen for short escapes that could be accomplished quickly; Cap 2 provides 60 to 79 liters for escapes of moderate distance; and Cap 3 provides 80 or more liters for the lengthiest escapes. The three capacity ratings correspond to the liter quantities of breathing gas supplies that are expended during the NIOSH capacity testing within approximately 10, 30, and 60 minutes, respectively.

The Cap 3 rating is equivalent to the current NIOSH-certified 60-minute rating for CCERs. The oxygen consumption rate associated with this rating is the average rate demonstrated through NIOSH testing of the 50th percentile miner by weight (191 pounds) performing the 1-hour Man test 4.[21] The test is a series of laboratory-based physical activities similar to those involved in coal mine rescues and escapes, including vertical treadmill climbs, walks, runs, and carries and pulls of substantial weights. As discussed under II(C), however, the duration of adequate breathing gas supply actually provided to a user by a respirator of a given capacity rating will depend on the degree of exertion involved in the particular escape and the size of the respirator user. For this reason, as discussed under II(C), NIOSH believes the change from a certification based on duration to one based on capacity is important. It would help prevent misunderstandings that could lead employers to select a CCER model that is inadequate for a particular set of escape contingencies and that could mislead an employee regarding the amount of breathing supply remaining during an escape. Using the hypothetical example of the one hundred and ninety pound man in the previous paragraph, the following table provides a set of possible use durations for illustrative purposes. These are calculated based on a consideration of limited factors and ideal use conditions and would be unlikely to match actual

[16] Fowler, B., Paul, M., Porlier, G., Elcombe, D.D., Taylor, M. 1985. A reevaluation of the minimum altitude at which hypoxic performance decrements can be detected. Ergonomics, 28(5): 781-791.

[17] For the same inhaled air temperature, the thermal load of humid air is higher than that of dry air. The maximum thermal load tolerated by a human being can be specified by many combinations of dry-bulb temperature and relative humidity, or by one wet-bulb temperature, for which the temperature is measured using a wet thermometer surface. Researchers have demonstrated that the wet-bulb temperature of the inspired air most accurately measures heat stress to the tissues of the mouth, as compared to temperature readings from an ordinary, dry thermometer, even when combined with the control of relative humidity (Kamon et al., 1984b).

[18] Kamon E, Deno S, Vercruyyen M [1984b]. Physiological responses of miners to emergency. Vol. 1—Self-contained breathing apparatus stressors. University Park, PA: The Pennsylvania State University. U.S. Bureau of Mines contract No. J0100092, p. 117, 119.

[19] Hodgson JL [1993]. Physiological costs and consequences of mine escape and rescue. University Park, PA: The Pennsylvania State University. U.S. Bureau of Mines contract No. J0345327, p. 19.

[20] Kamon E, Bernard T, Stein R [1975]. Steady state respiratory responses to tasks used in Federal testing of self-contained breathing apparatus. AIHA J 36:886–896.

[21] See 42 CFR 84.100, Table 4 for the specific requirements of Man test 4.

durations achieved by users in actual or simulated escapes.

CAPACITY VERSUS WORK ACTIVITY

	Capacity 1 (20 liters) (minutes)	Capacity 2 (60 liters) (minutes)	Capacity 3 (80 liters) (minutes)
At Rest (.5 L/Minute)	40	120	160
Run at 3 mph (1.18 L/Minute)	17	51	68
Run at 5 mph (2.72 L/Minute)	7	21	28

NIOSH is seeking information on the capacity versus work activity information provided in the table to determine if the provided information is useful to users for developing escape respirator deployment plans. NIOSH is also seeking opinions on whether a table, such as described above, should be required to be provided by the CCER manufacturer in the CCER user instructions.

In addition to having a capacity rating system to categorize products, manufacturers would be able to use the actual tested capacity of approved respirator models, which NIOSH would report to the manufacturer in increments of 5 liters, to specify more precisely the capacity of each product. This would enable employers to readily compare differences in respirator capacity within a given rating, more closely match a respirator model to their particular needs, and choose the respirator model that best serves their employees. For example, an employer might determine through simulation of escapes that employees will need a Cap 3 CCER model that provides 95 liters to allow for the worst contingencies. Alternatively, an employer might determine that a Cap 3 model that provides 80 liters is sufficient and better designed, in terms of physical dimensions or operational characteristics, to accommodate the routine work tasks and escape contingencies of the employees.

The capacity testing would evaluate seven CCER units using the breathing and metabolic simulator. Three would be tested in the condition received from the applicant (i.e., ''new'' condition), two would receive environmental treatments prior to capacity testing, and the remaining two units would be tested at the cold-temperature limit specified by the manufacturer, after being stored at the specified temperature.

Each unit would be tested at the work rate identified in the table below, according to the capacity level designated by the applicant. In terms of the rate of oxygen usage, carbon dioxide production, ventilation rate, and respiratory frequency, the work rates are representative of the average work rate that the typical CCER user might sustain during an escape, based on laboratory physiological testing involving miners .[22] As the table shows, the greater the capacity of the CCER, the lower the work rate that would be used to test the CCER, reflecting the lower average rate of exertion that the typical user would be capable of sustaining for escapes of longer duration. To further evaluate these proposed test parameters, NIOSH invites the public to submit comparable data on physiological monitoring of worker populations at varied levels and durations of exertion.

In December 2006, NIOSH received comments from a respirator manufacturer regarding the use of different work rates to test CCERs of different capacities. The manufacturer recommended that NIOSH apply the same work rate irrespective of the capacity of the device being evaluated.

The Navy, which is the principal consumer of low capacity CCERs, has specifically requested that NIOSH test at a high work rate the CCERs used by Navy personnel. This is consistent with the premise that low capacity devices are likely to be used for short, very challenging escapes that would induce exceptionally high work rates. NIOSH finds it is appropriate to apply a work rate that represents the level of exertion sustainable by a typical user while using a device of a particular capacity. Hence, NIOSH has specified such an approach in this proposed rule. NIOSH welcomes further comment and information regarding this matter.

One of the units submitted would be tested by a human subject on a treadmill. The purpose of this human test is to provide assurance that the simulator is reasonably measuring the capacity of the respirator as it would be expended in actual use.

CAPACITY TEST REQUIREMENTS

Capacity rating	Capacity (L of O_2)	$\dot{V}O_2$ (L/min)	$\dot{V}CO_2$ (L/min)	$\dot{V}_e$ (L/min)	RF
Cap 1	$20 \leq L \leq 59$	2.50	2.50	55	22
Cap 2	$60 \leq L \leq 79$	2.00	1.80	44	20
Cap 3	$L \geq 80$	1.35	1.15	30	18

$\dot{V}O_2$ = volume of oxygen consumed/min; $\dot{V}CO_2$ = volume of carbon dioxide produced/min.
$\dot{V}_e$ = ventilation rate in liters of air per minute; RF = Respiratory frequency.

In addition to this standard testing regime to be used for all CCERs, when testing CCER models to be approved for use in coal mines under the Cap 3 rating, NIOSH would also continue to conduct the one-hour Man test 4 discussed above, as required under the current 42 CFR Part 84 regulations. Although the proposed capacity system and tests using the breathing and metabolic simulator represent a substantial improvement over the existing Man test 4, the Federal Mine Safety and Health Act requires that ''no mandatory health or safety standard

[22] Kamon E, Bernard T, Stein R [1975]. Steady state respiratory responses to tasks used in Federal testing of self-contained breathing apparatus. AIHA J 36:886–896.

* * * shall reduce the protection afforded miners by an existing mandatory health or safety standard.'' 30 U.S.C. 811(a)(9). Since NIOSH would no longer approve CCERs as one-hour devices under this proposed rule, NIOSH must be able to demonstrate that the use of the Cap 3 rating and associated tests to approve equipment for use in underground mines would not constitute a reduction in protection or a reduction in the duration of breathing supply regulated under the current MSHA one-hour requirement for SCSRs. NIOSH believes that the continued use of the Man test 4, as a supplement to the proposed new testing requirements and capacity rating system, would be the most practical method of accomplishing such a demonstration. NIOSH invites public comments on this or any alternative approaches that might effectively address this legal requirement.

In addition, NIOSH invites public comment on the oxygen consumption rate associated with breathing and metabolic simulator testing for the Cap 3 rating. As discussed above, the oxygen consumption rate associated with this rating would be the average rate demonstrated through NIOSH testing of the 50th percentile miner by weight (191 pounds) performing the 1-hour Man test 4. NIOSH could require a more stringent testing parameter, such as the oxygen consumption rate associated with the 95th percentile miner by weight (220 pounds). The effect of a more stringent standard would be to increase the minimum quantity of adequate breathing gas supplied under a Cap 3 rating. This increased minimum supply would be accompanied, however, by a commensurate increase in the minimum sizes of CCERs that could be designed under the Cap 3 rating. This is of concern because the larger that a CCER is designed to be (to supply a greater minimum capacity of breathing gas), the less practical the CCER becomes to be worn on a belt (for availability in case of an emergency) during routine work activities. Limiting the size of CCERs has been a consistent concern of miners. NIOSH is proposing an oxygen consumption rate based on the 50th percentile miner as a reasonable balance between establishing an adequate minimum breathing gas supply for demanding escape scenarios and ensuring that available devices can be worn safely, practically, and without excessive discomfort for the duration of a work shift.

Section 84.305

This section specifies the performance testing regimen that would be used to certify the ability of the CCER to provide a constantly adequate breathing supply for the user immediately upon donning and under varied work rates, including a level representative of peak demand and minimal demand. The high work rates used during the test would activate the demand valve, if present in the CCER model, and stress the carbon dioxide-absorbent. The low work rate would activate the relief valve, if present. The test includes a procedure (immediate exhalation into the unit) to evaluate the potential for the user to experience hypoxia (a deficient oxygen concentration) upon donning the CCER. Hypoxia could occur with a CCER using compressed oxygen and a demand valve if the user forces enough nitrogen into the breathing circuit to prevent the activation of the demand valve and the user had consumed more oxygen than the constant quantity supplied by the CCER. Such a situation is more likely to arise if a CCER user is not adequately trained in its use.

In December 2006, NIOSH received comments from a respirator manufacturer recommending that NIOSH test devices in compliance with the manufacturer's user instructions. This recommendation would mean that NIOSH would not evaluate the potential for hypoxia when testing a CCER that uses compressed rather than chemical oxygen, since users are not instructed to exhale into such respirators upon donning them.

NIOSH performance testing assumes that some CCER users will not comply with manufacturer's instructions. Many CCER users are trained to exhale into a CCER upon donning it because this is the recommended practice for CCERs supplied with chemical oxygen. In an emergency, it is likely that some users will exhale into the CCER regardless of its design, in which case NIOSH needs to ensure that the respirator will perform adequately. For this reason, NIOSH has proposed a generic performance testing protocol, irrespective of CCER design, that includes the hypoxia testing procedure. NIOSH welcomes further comments and information from the public concerning this matter.

The performance testing would evaluate five CCER units using the breathing and metabolic simulator. Of these, three units would be tested in new condition, and two would receive environmental treatments prior to performance testing. The testing regimen would employ the following oxygen use-rate cycle: 3.0 liters per minute for 5 minutes, 2.0 liters per minute for 15 minutes, and 0.5 liters per minute for 10 minutes. Other parameters of the testing are specified in the table below.

PERFORMANCE TEST REQUIREMENTS

Work-rate test sequence	Duration per cycle (min.)	$\dot{V}bO_2$ (L/min)	$\dot{V}CO_2$ (L/min)	$\dot{V}_e$ (L/min)	RF (breaths/min)
1. Peak	5	3.00	3.20	65.0	25
2. High	15	2.00	1.80	44.0	20
3. Low	10	0.50	0.40	20.0	12

$\dot{V}O_2$ = volume of oxygen consumed/min; $\dot{V}CO_2$ = volume of carbon dioxide produced/min.
$\dot{V}_e$ = ventilation rate in liters of air per minute; RF = respiratory frequency.

The 3.0 liters per minute oxygen use-rate represents peak exertion. The 2.0 liters per minute oxygen use-rate is high, representing substantial exertion. The 0.5 liters per minute oxygen use-rate is very low, representing a sedentary person, such as a worker who might be trapped and awaiting rescue.[23]

The test would be started by the exhalation of two large breaths into the unit before donning it. This would

[23] ''Evaluation of Proposed Methods to Update Human Testing of SCBA,'' Turner, Beeckman, and Hodous, AIHA Journal, Volume 56, December 1995, pp 1195–1200. ''Cardiorespiratory strain in jobs that require respiratory protection,'' Louhevaara, V., T. Tuomi, J. Smolander, O. Korhonen, et al., Int. Arch. Occup. Environ. Health. 55:195–206, 1985. ''The human energy cost of fire fighting,'' Lemon, P.W. and T.T. Hermiston, J. Occup. Med. 19:558–562, 1977.

determine the susceptibility of the CCER to hypoxia.

Since the testing cycle requires 50 liters of oxygen, CCERs that have less than a 50 liter capacity would exhaust their capacity prior to completing a full cycle as specified. To accommodate this limitation, if a unit contains less than 50 liters of useable oxygen (as determined by the capacity test under § 84.304), NIOSH will require the submission of additional units so that the test can be completed through the testing of a sequence of two or three units, as necessary. Such a requirement ensures that the CCER is tested at each work rate in its entirety. CCERs with greater than a 50 liter capacity would repeat the cycle until the oxygen supply is exhausted, as indicated in the graph below.

One unit would be tested by a human subject on a treadmill. The purpose of the human subject test is to provide assurance that the respirator will perform effectively when responding to the more variable loading produced by a human subject.

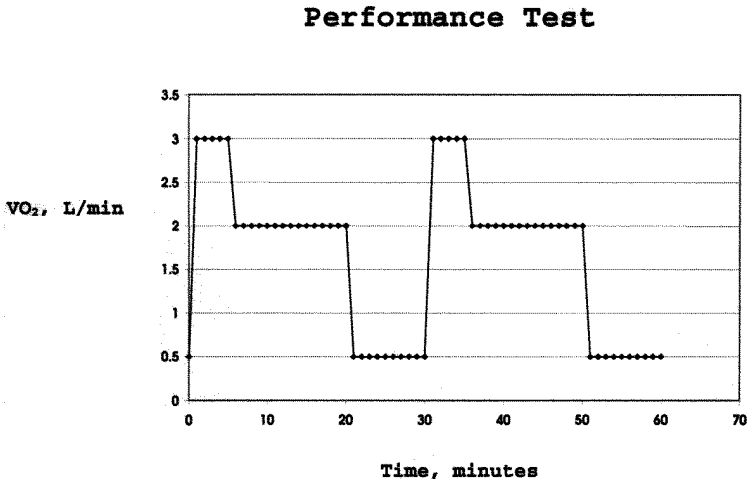

Section 84.306

This section specifies the testing regimen that would be used to ensure that the CCER can be easily and quickly donned. The testing procedures also ensure that during any reasonably anticipated activity, the CCER would not physically harm or significantly hinder the user and would provide an adequate and uninterrupted supply of breathing gas. Testing would be conducted using three human subjects of differing heights and weights,[24] as specified, to provide reasonable assurance that the results would be representative of most potential CCER users.

Subsection (b) would require that trained users be able to successfully don the CCER, initiating breathing through the device within 30 seconds. This criterion, derived from current training requirements for the use of CCERs,[25] is reasonably protective in the case of emergency scenarios involving an explosion or sudden detection of a hazardous breathing environment. This subsection would allow NIOSH to determine whether any particular design, construction, or material characteristic of the CCER could hinder the user in the correct and timely donning of the CCER. These determinations may be made based on either the demonstrated ability of a human subject to don the CCER as required or the identification of plausible circumstances that would prevent the required timely donning.

Subsection (c) and the table below specify the activities that would be performed by the human subjects to test the CCER. These activities are derived from the present regulations and represent the types of activities and physical orientations that may occur during escapes. The test would continuously monitor the CCER to ensure these activities and orientations do not adversely affect the adequacy of the CCER's supply of breathing gas and to identify any potential for the CCER to harm or hinder the user during an escape.

WEARABILITY TEST REQUIREMENTS

Activity	Minimum duration
Sitting	1 min.
Stooped walking	1 min.
Crawling	1 min.
Lying on left side	1 min.
Lying on right side	1 min.
Lying on back	1 min.
Bending over to touch toes	1 min.
Turning head from side to side	1 min. (at least 10 times).
Nodding head up and down	1 min. (at least 10 times).
Climbing steps or a laddermill	1 min. (1 step/sec).

[24] The size range is intended to be representative of respirator users. See: Zhuang Z and Bradtmiller B [2005]. Head-and-face anthropometric survey of U.S. respirator users. Journal of Occupational and Environmental Hygiene 2: 567–576.

[25] Vaught C, Brnich MJ, and Kellner HJ (1988). Instructional Mode and Its Effect on Initial Self-contained Self-Rescuer Donning Attempts During Training. Pittsburgh, PA: U.S. Department of the Interior, Bureau of Mines, RI 9208.

WEARABILITY TEST REQUIREMENTS—Continued

Activity	Minimum duration
Carrying 50-lb bag on treadmill at 5 kph	1 min.
Lifting 20-lb weight from floor to an upright position	1 min. (at least 10 times).
Running on treadmill at 10 kph	1 min.

Section 84.307

This section specifies the environmental treatments that would be administered to the CCER to ensure that it is reasonably durable and resistant to the potentially performance-degrading environmental factors of extreme storage temperatures, shock, and vibration. The extreme storage temperature test specified in subsection (b) is based on worst-case scenarios. For example, the high temperature (71°C) test is based on the temperature associated with storage in the trunks of vehicles. The shock test specified in subsection (c), which is a series of one meter drops onto a concrete surface, is based on the height at which the respirator would be handled and attached to the user's belt. The vibration test specified in subsection (d) is a composite test based on the reported vibration levels measured on the frames of underground longwall and continuous mining machines and on underground and surface haulage vehicles.[26]

Section 84.308

This section specifies several other tests that NIOSH would conduct, as appropriate. Each unit tested must meet the conditions specified in the test to receive approval.

Under subsection (b), NIOSH would perform safety hazard tests on any CCER that stores more than 200 liters of oxygen or that stores compressed oxygen at pressures exceeding 3,000 psi. None of the current one-hour CCER designs has such storage capacities. However, if such a design were submitted for approval, the applicant would have to provide an additional 15 units of the CCER for these additional tests. The specifications for the tests are provided in a series of Bureau of Mines reports referenced in the regulatory text.

Under subsection (c), NIOSH would perform a series of tests on one or more units of every CCER submitted for approval to evaluate the effectiveness of the required eye protection (goggles or an escape hood lens) against dust, gas, and fogging that could impair the user's vision. The tests proposed for dust and gas were established by the International Organization for Standardization (ISO), a globally recognized consensus standard setting organization.[27] The test for fogging was established by the European Committee for Standardization (CEN), a consensus standard-setting organization within the European Union.[28] NIOSH has also proposed an ISO test for the robustness of the construction of the eye protection.[29] These specified tests, which are widely accepted by the safety and manufacturing communities, would be incorporated by reference into this rule.

NIOSH received comments from one respirator manufacturer indicating that these standards for the safety and durability of eye protection might not be appropriate for eye protection included with CCERs.

It is reasonable to question whether eye protection that is stored within the protective cover of a CCER and used only during a one-time escape requires the same durability as eye protection worn daily. At this time, NIOSH lacks other alternative standards, but considers it important that eye protection provided with a CCER be able to endure the rough handling of CCERs in mines and be adequate for various escape scenarios. This would include all of the potentially degrading conditions addressed by the consensus standards that NIOSH has proposed to include by reference. NIOSH welcomes public comments and information concerning this matter.

Section 84.309

This section would provide for NIOSH to test and approve dockable CCERs, which are CCERs that would allow the user to resupply the breathing gas source included in the CCER through the attachment (docking) of breathing gas resupply sources that would be cached at locations along escape routes. Such dockable CCERs do not presently exist in the U.S. respirator market, but substantial interest in such technology has been expressed in the mining community, most recently in response to the Sago Mine disaster in 2006.[30]

Paragraph (a) specifies that NIOSH would conduct testing to ensure that the CCER user would be able to perform the docking process safely, reliably, and quickly under escape conditions. Precise testing protocols are not specified because they would depend on the technology, which has yet to be developed. However, the provisions clearly specify the qualitative performance characteristics required for approval.

Paragraph (b) provides that NIOSH would designate CCERs that meet the testing requirements of this section as ''Dockable.''

Paragraph (c) provides that NIOSH would assign the capacity rating to the dockable CCER using only the breathing gas supply included for the initial use of the wearable apparatus. In other words, the capacity of the breathing gas resupply units would not be taken into account in rating the capacity of the CCER.

Paragraph (d) provides that NIOSH would test the breathing gas resupply units produced for the dockable unit and specify their capacities using capacity testing procedures consistent with those applied to testing the dockable CCER. This testing is necessary so that users have NIOSH verification of the capacity of the resupply units. The provision would also provide for appropriate labeling to specify the capacity of the resupply unit and its compatibility with the CCER.

Paragraph (e) provides that NIOSH would be able to require the applicant to provide additional units of the CCER for the additional testing associated with dockable units. NIOSH cannot determine at this time whether additional units will be needed.

[26] Dayton T. Brown, Inc. Environmental Test Criteria for the Acceptability of Mine Instrumentation. USBM contract J0100040, Phase 1, Final Report DTB2GR80–0643, June 1980, 131 pp., Table 2, p. 72.

[27] See clauses 13 and 14 of ISO 4855, (1981–04–01). Copies are available for inspection at NIOSH (see rule text for details) and for purchase from the ISO Web site at: *http://www.iso.org/iso/store.htm.*

[28] See European Standard EN 168:2002, (28 January 2002). Copies are available for inspection at NIOSH (see rule text for details) and for purchase from the BSI British Standards Web site at: *http://www.bsigroup.com/en/Standards-and-Publications.*

[29] Sub-clause 3.1 of ISO 4885, (1981–04–01). Copies are available from NIOSH. Copies are available for inspection at NIOSH (see rule text for details) and for purchase from the ISO Web site at: *http://www.iso.org/iso/store.htm.*

[30] ''The Sago Mine Disaster: A preliminary report to Governor Joe Manchin III'', McAteer, J. Davitt *et al.,* July 2006, p. 14, Buckhannon, West Virginia, *http://www.wvgov.org.*

Paragraph (f) provides that NIOSH would not approve a CCER with docking components, even without the NIOSH ''Dockable'' designation, unless it satisfies the testing and other requirements proposed for approving dockable units. This provision is intended to avoid the plausible circumstance of users mistaking certified CCERs with docking components as having been certified by NIOSH as dockable.

Section 84.310

This section would provide for NIOSH to conduct periodic testing of deployed units of approved CCERs. The purpose of such post-certification testing is to evaluate the capacity and performance of the approved CCER after it has been subject to actual field conditions including operations, storage, and handling at worksites. NIOSH would obtain such units from employers in exchange for new units, substituted at no cost to the employer. NIOSH would require, as a condition of continued approval, that the applicant make available for purchase by NIOSH a sufficient number of new units (not to exceed 100 units annually) to support the post-certification testing program. If testing indicates that deployed units of a CCER are not consistently meeting the capacity and performance standards under which the CCER was approved, NIOSH would request remedial actions by the applicant. NIOSH would be authorized to revoke the approval of a CCER if the applicant does not remediate the cause(s) of the problem(s). In such a case, NIOSH would work with the relevant regulatory agencies and industry and labor organizations to notify users of the revocation.

A program of post-certification testing is important for assuring users of the effectiveness of their equipment. Simulations of environmental conditions conducted in a laboratory during the certification process cannot perfectly and comprehensively replicate all conditions that might be associated with the actual storage and wearing of CCERs in mines and other work environments. The post-certification testing also can serve to identify potential problems of quality control in the manufacturing process.

For such testing to occur, NIOSH must be able to purchase a sufficient number of units of a CCER to replace deployed units selected for testing. On several occasions, NIOSH has been hampered by the lack of an available supply of a CCER model, either because the manufacturer produces the products intermittently or has ceased production permanently. The regulatory requirements of this section would ensure the feasibility of a post-certification testing program and would establish specific legal authorities and obligations in connection with the results of such testing.

Section 84.311

This section would require manufacturers to provide each purchaser of a CCER unit with copies of procedures for registering purchased units with NIOSH. NIOSH would also work with relevant agencies and industry and labor associations to publicize the registration program. It would be particularly important to reach purchasers and users of CCERs who obtain their devices from secondary markets and through equipment transfers from other work sites. This registration would enable NIOSH to notify purchasers when: (1) A problem associated with a model of CCER is identified; (2) such a problem requires a remedial action; or (3) NIOSH revokes the certification of a CCER. Presently, NIOSH has limited ability to locate users of particular CCER models. Manufacturers do not consistently retain records of purchasers and may sell product through distributors. Also, there is a secondary market for re-selling purchased CCERs as purchasers go out of business, reduce their employment, or select an alternate CCER model.

Subpart G

Sections 84.60, 84.63–84.65

These sections of Subpart G, which provide general construction and performance requirements for respirators certified under 42 CFR pt. 84, are presently limited to covering respirator types specified under Subparts H through L. Since this rule would remove CCERs provisions from under Subpart H and would place them under a newly created Subpart O, Subpart G needs to be revised to cover Subpart O as well as Subparts H through L. Furthermore, by technical error, existing Subparts N and KK have been inadvertently omitted from coverage under Subpart G, even though this provision was intended to apply to all respirators types. NIOSH would extend the coverage of Subpart G to all respirators certified under this part (i.e., Subparts H through KK) to clearly specify the comprehensive coverage of Subpart G to all respirator types presently certified. This change will also provide coverage under Subpart G for respirator types that might be distinguished under newly created sections in the future.

Subpart H

Section 84.70

This section would exclude CCERs from coverage under any provisions of Subpart H. The provisions of Subpart H concerning respirators used for escape from hazardous environments would be applicable solely to those with an open-circuit design.

IV. Regulatory Assessment Requirements

A. Executive Order 12866

Under Executive Order (E.O.) 12866 (58 FR 51735, October 4, 1993), the Agency must determine whether a regulatory action is ''significant'' and therefore subject to review by the Office of Management and Budget (OMB) and the requirements of the executive order. Under Section 3(f), E.O. 12866 defines a ''significant regulatory action'' as an action that is likely to result in a rule (1) having an annual effect on the economy of $100 million or more, or adversely and materially affecting a sector of the economy, productivity, competition, jobs, the environment, public health or safety, or State, local, or tribal governments or communities (also referred to as ''economically significant''); (2) creating serious inconsistency or otherwise interfering with an action taken or planned by another agency; (3) materially altering the budgetary impacts of entitlements, grants, user fees, or loan programs or the rights and obligations of recipients thereof; or (4) raising novel legal or policy issues arising out of legal mandates, the President's priorities, or the principles set forth in E.O. 12866.

This proposed rule is being treated as a ''significant regulatory action'' within the meaning of E.O. 12866. In particular, the proposed rule would limit the applicability of current MSHA requirements under 30 CFR 75.1714–1 that mine operators provide miners in underground coal mines with CCERs (referred to in the mining community as ''SCSRs'') which have been ''approved by MSHA and NIOSH under 42 CFR Part 84, as follows:

(a) 1-hour SCSR;

(b) A SCSR of not less than 10 minutes and a 1-hour canisters; or

(c) Any other self-contained breathing apparatus which provides protection for a period of 1 hour or longer and which is approved for use by MSHA as a self-rescue device when used and maintained as prescribed by MSHA.''

The proposal would eliminate the practice by NIOSH and MSHA of approving CCERs on the basis of the duration of breathing supply provided

by the CCER. Hence, paragraphs (a) and (b) of the MSHA regulation would no longer have effect.

As discussed above, categorization of a CCER's capacity according to the duration of its breathing gas supply during testing can be misleading to purchasers and users because testing results may not reflect actual performance for varied users under actual escape conditions. The most reliable practice to ensure that miners are adequately provisioned for escapes would be to empirically test ''worst-case'' escape scenarios for a particular mine site using respirators likely to have sufficient capacity and then to make selections accordingly. The MSHA rule would have to be modified to either replace the current duration denominations with capacity ratings pursuant to the rating system in this proposed rule or require mine operators to conduct empirical tests to select appropriate CCERs.

The proposed rule is not considered economically significant, as defined in § 3(f)(1) of the E.O. 12866. Respirator manufacturers will probably have to modify existing CCER designs to meet the proposed new capacity and performance testing requirements. However, these changes are not expected to require manufacturers to use fundamentally different or substantially more costly technology. Benchmark testing of currently approved technology using the capacity and performance requirements of the proposed rule shows that at least one current CCER product is likely to pass these new tests without any change in design. Similarly, NIOSH does not expect the proposed new requirements for indicators of excessive thermal exposure, moisture damage, or chemical bed integrity to have a substantial impact on the manufacturing cost of CCERs. Such indicators have already been incorporated into CCER designs by some manufacturers without substantially increasing product prices. Hence, NIOSH does not expect that manufacturers would have to engage in new manufacturing processes (to meet the requirements under this proposed rule) that would substantially increase manufacturing costs or product prices.

Moreover, the scope of the market for CCERs is presently very limited. According to data from the Bureau of Labor Statistics, in 2003 there were fewer than 45,000 U.S. miners and other workers in underground extractive occupations (such as mining machine operators; excavating machine operators; and loaders, roof bolters, and their helpers) who might use CCERs. According to MSHA, there are approximately 37,000 underground coal miners, the principal users of CCERS in the private sector. The service life of current CCER models ranges from 10 to 15 years, although some units may be damaged or used for an escape or escape simulation and used sooner. Assuming that each CCER unit is replaced, on average, every ten years and taking into account that approximately 203,000 units will be deployed under the current MSHA emergency standard,[31] the mining industry would purchase an average of 20,300 units annually. Since the average cost of CCERs is $665 [32] and is not expected to increase substantially as a result of the proposed rule, these data suggest that this principal component of the current CCER market represents less than $14.0 million in annual sales. Other major components of the CCER market include sales to the Navy and Coast Guard and possibly the maritime industry. Among these, the Navy is the largest consumer, with over 400,000 units in current use and anticipated average annual purchases of approximately $20 million.[33]

Mine operators and other employers would be most significantly impacted by the one-time costs associated with potentially having to replace CCERs approved under the existing standard with CCERs approved under the final rule, upon promulgation and expiration of the phase-in period. As proposed, these purchasers would have to replace any currently deployed CCERs that are not re-approved under the proposed rule within six years after the final rule is promulgated. Assuming that 40 percent, or 81,200 units, would have to be replaced by mine operators prior to the end of their service life [34] at the assumed 10 percent annual replacement rate,[35] the proposed rule would cost all mine operators combined a maximum of $8 million. This estimate represents the present value of the remaining service life of deployed units that would have to be replaced at the end of the six-year grandfather period. The replacement cost for the Navy would be approximately $12 million in terms of the present value of deployed units that would have to be replaced.[36]

The cost of replacing deployed units whose service life has not expired would be incurred only once since this rule includes no provisions that would force respirator manufacturers to design CCERs with shorter service lives than are achieved by currently certified models of these respirators.

The new requirements would likely produce economic benefits. First, they would provide more product performance information to purchasers, which would serve to produce a more efficient market. Respirators would be tested for their specific capacity, in addition to being rated by general categories of capacity. As discussed under Section III—84.304 of the preamble, this specificity would allow purchasers to match respirators more closely to their particular needs. As a result, the new requirements would provide an incentive for manufacturers to innovate and possibly produce more diverse products. Having specific NIOSH-certified capacity levels would provide manufacturers with more incentive to differentiate the performance of their products from those of their competitors. This competition should result in a market of products that more closely meet the design and performance needs of different work sites, thereby improving the protection of miners and other workers who rely on CCERs in emergencies.

Second, the new requirements for safety features (which provide for the detection of units that have undergone

[31] MSHA estimates there were approximately 45,000 CCERs deployed for coal mining prior to the MSHA emergency temporary standard for emergency mine evacuation, one unit for each underground miner or mine contractor, and MSHA estimates an additional 168,000 units would be deployed in compliance with the Final Emergency Mine Evacuation standard.

[32] *MSHA Regulatory Economic Analysis, Emergency Mine Evacuation, Final Rule, December 2006* (RIN: 1219–AB46), p. 57.

[33] Estimated from information provided by the Naval Surface Warfare Center, Panama City, Florida, December 20, 2004.

[34] This assumption is conservative. It supposes that CCERs deployed in mines would last for a service life of 10 years. It is the experience of NIOSH researchers that CCERs do not typically remain in approved condition this long, due to the harsh physical conditions to which they are subjected in and outside of the mine while donned, worn, stored, and transported on mine vehicles. It also assumes that mine operators will purchase newly approved devices once the NIOSH final rule is promulgated and becomes effective, despite the three year grandfather period during which respirator manufacturers could continue to sell devices that would not be approved under the final rule.

[35] MSHA estimates that approximately 45,000 CCERs were deployed in mines prior to promulgation of the MSHA final standard and that approximately 168,000 units will be deployed as a result of the final standard. The 81,200 units would have an average of 2.5 years of remaining service life at the end of the 6-year grandfather period, if NIOSH promulgates a final rule in 2008. The present value of the remaining service life years of deployed units was calculated by using a 7 percent discount rate and an average cost of a CCER of $665.

[36] The Navy has approximately 400,000 units in service and is replacing them at a rate of approximately 40,000 per year and a cost of approximately $500 per unit. This means 160,000 units would have to be replaced at the end of the 6-year grandfather period, being replaced an average of 2.5 years prior to their planned replacement.

excessive environmental stresses or mishandling) has potential for increasing the ability of purchasers, users, inspectors, and others to contribute to assuring the reliability of deployed CCER units.

Third, the new requirements for safety features and for capacity and performance testing are designed to better protect workers relying on CCERs for their survival. Although NIOSH lacks information on the number of workers annually who rely on a CCER for their survival and the quantifiable benefit they would derive from the improvements in this rule, costs associated with death and disability could be avoided. In addition, costs associated with rescue operations could be averted if workers escape independently.

The proposed rule would not interfere with State, local, and tribal governments in the exercise of their governmental functions.

OMB has reviewed this proposed rule for consistency with the President's priorities and the principles set forth in E.O. 12866.

B. Regulatory Flexibility Act

The Regulatory Flexibility Act (RFA), 5 U.S.C. 601 *et seq.*, requires each agency to consider the potential impact of its regulations on small entities including small businesses, small governmental units, and small not-for-profit organizations. The Department of Health and Human Services (HHS) certifies that this proposed rule would not have a significant economic impact on a substantial number of small entities within the meaning of the RFA.

The proposed rule establishes new testing and certification requirements for the particular type of respirator, the CCER, used by workers in mines and other settings to escape hazardous atmospheres. MSHA and Occupational Safety and Health Administration (OSHA) regulations require that when employers provide respirators to their employees, the respirators must be NIOSH/MSHA-certified or NIOSH-certified respirators. Hence, the proposed rule would impose new requirements on the manufacturers of CCERs, who may have to design new products and make related changes to their manufacturing process for such products. However, such new designs would not require substantial technological innovation and any additional costs incurred by the manufacturers would be passed on to consumers since there is essentially no demand elasticity for these products, which are required by Federal safety and health regulations.

Furthermore, CCERs are presently manufactured by only two U.S. companies: CSE Corporation of Monroeville, Pennsylvania, and Ocenco Incorporated of Pleasant Prairie, Wisconsin. While these manufacturing companies are small businesses as defined under the Small Business Act (Pub. L. 85–536) for this industry sector (NAICS 339112—Surgical and Medical Instrument Manufacturers), employing fewer than 500 employees, HHS proposes that two companies do not represent a substantial number of entities under the RFA.

The proposed rule will have an economic impact on the operators of the 580 underground coal mines in the United States in 2003 [37], the majority of which are defined as small businesses by the Small Business Administration. Underground coal mine operators are required to supply each underground coal miner with NIOSH/MSHA-certified CCERs. These mine operators might have to replace some of their stock of CCERs that have remaining service life if the CCERs have not been re-approved by NIOSH under the new requirements of the final rule. This economic impact would not be significant, however. The present value of respirators that might have to be replaced as a result of this rule would not exceed $8 million, as discussed above. This represents less than 0.1 percent of the estimated annual revenues for underground coal mine operators.[38]

In addition to costs for replacing any respirators with remaining service life that are not re-approved by NIOSH, any change in the cost of respirators would also be borne by mine operators.

Although NIOSH is not able to forecast whether the prices of CCERs would indeed be affected by the new certification testing requirements, it is unlikely that any increase in costs would prove substantial. Respirator manufacturers would probably have to modify existing CCER designs to meet the new capacity or performance testing requirements. However, these requirements should not cause the manufacturers to use fundamentally different or substantially more costly technology, as discussed above. Hence, NIOSH does not expect that manufacturers would have to engage in new manufacturing processes that would substantially increase product prices.

Moreover, even if product prices were to increase substantially, it would not produce a substantial economic impact on mine operators. Currently, the average price of a CCER is $665.[39] Assuming that each unit requires replacement every 10 years and that the prices of CCERs were to increase by 50 percent as a result of this rule, the annualized additional costs of $26 per underground coal miner [40] would not be significant in the context of the total per capita labor costs of underground coal mine operators.[41]

For the reasons provided, a regulatory flexibility analysis, as provided for under RFA, is not required.

C. What Are the Paperwork and Other Information Collection Requirements (Subject to the Paperwork Reduction Act) Imposed Under This Rule?

The Paperwork Reduction Act is applicable to the data collection aspects of this rule. Under the Paperwork Reduction Act of 1995, a Federal agency shall not conduct or sponsor a collection of information from ten or more persons other than Federal employees unless the agency has submitted a Standard Form 83, Clearance Request, and Notice of Action, to the Director of the Office of Management and Budget (OMB), and the Director has approved the proposed collection of information. A person is not required to respond to a collection of information unless it displays a currently valid OMB control number.

OMB has approved NIOSH's collection of information from applicants under this rule (OMB Control # 0920–109, ''Respiratory Protective Devices,'' which covers all information collection under 42 CFR pt. 84). The information NIOSH would collect pursuant to this rulemaking does not differ substantially from the information presently collected by NIOSH from applicants who presently hold NIOSH approvals of their CCER products. Furthermore, NIOSH is aware of only three manufacturers (two that are U.S. companies) intending to continue manufacturing CCERs.

[37] Table 2: Coal Production and Number of Mines by State, County, and Mine Type, 2003. Annual Coal Report 2003. Energy Information Administration.

[38] MSHA estimates revenues of underground coal mine operators at $9,488,466,936. See Can this be put in quotes? Previous footnote documents are not underlined. *MSHA Regulatory Economic Analysis, Emergency Mine Evacuation, Final Rule, December 2006* (RIN: 1219–AB46), p. 106.

[39] *MSHA Regulatory Economic Analysis, Emergency Mine Evacuation, Final Rule, December 2006* (RIN: 1219–AB46), p. 57.

[40] $665/unit × 0.5 cost increase × 203,000 units × 0.1 annual replacement rate × 0.1424 annualization factor ÷ 37,000 underground miners = annual costs per underground miner.

[41] According to the National Mining Association, coal miners have average annual earnings of $50,000. *Profile of the U.S. Coal Miner 2003; http://www.nma.org/pdf/c_profile.pdf*; updated October 2004.

D. Small Business Regulatory Enforcement Fairness Act

As required by Congress under the Small Business Regulatory Enforcement Fairness Act of 1996 (5 U.S.C. 801 *et seq.*), HHS must report to Congress the promulgation of a final rule, once it is developed, prior to its taking effect. The report would state that HHS has concluded that the rule is not a ''major rule'' because it is not likely to result in an annual effect on the economy of $100 million or more.

E. Unfunded Mandates Reform Act of 1995

Title II of the Unfunded Mandates Reform Act of 1995 (2 U.S.C. 1531 *et seq.*) directs agencies to assess the effects of Federal regulatory actions on State, local, and tribal governments and the private sector ''other than to the extent that such regulations incorporate requirements specifically set forth in law.'' For purposes of the Unfunded Mandates Reform Act, this proposed rule does not include any Federal mandate that may result in increased annual expenditures in excess of $100 million by State, local or tribal governments in the aggregate, or by the private sector.

F. Executive Order 12988 (Civil Justice)

This proposed rule has been drafted and reviewed in accordance with Executive Order 12988, Civil Justice Reform, and will not unduly burden the Federal court system. NIOSH has provided clear testing and certification requirements it would apply uniformly to all applications from manufacturers of CCERs. This proposed rule has been reviewed carefully to eliminate drafting errors and ambiguities.

G. Executive Order 13132 (Federalism)

HHS has reviewed this proposed rule in accordance with Executive Order 13132 regarding federalism, and has determined that it does not have ''federalism implications.'' The proposed rule does not ''have substantial direct effects on the States, on the relationship between the national government and the States, or on the distribution of power and responsibilities among the various levels of government.''

H. Executive Order 13045 (Protection of Children From Environmental, Health Risks and Safety Risks)

In accordance with Executive Order 13045, HHS has evaluated the environmental health and safety effects of this proposed rule on children. HHS has determined that the proposed rule would have no effect on children.

I. Executive Order 13211 (Actions Concerning Regulations That Significantly Affect Energy Supply, Distribution, or Use)

In accordance with Executive Order 13211, HHS has evaluated the effects of this proposed rule on energy supply, distribution, or use because it applies to the underground mining sector. The proposed rule would not result in any yearly costs to mines and could result in one-time costs of $8 million associated with the replacement of deployed CCERs that do not pass the tests in this proposed rule and have not reached the end of their service life. Relative to the annual revenues of the underground coal mining industry, which were $11.1 billion in 2004, these one time costs are not ''likely to have a significant adverse effect on the supply, distribution, or use of energy'' and hence this proposed rule does not constitute a ''significant energy action.'' Accordingly, E.O. 13211, Actions Concerning Regulations That Significantly Affect Energy Supply, Distribution, or Use, requires no further Agency action or analysis.

List of Subjects in 42 CFR Part 84

Incorporation by reference, Mine safety and health, Occupational safety and health, Personal protective equipment, Respirators.

Text of the Rule

For the reasons discussed in the preamble, the Department of Health and Human Services proposes to amend 42 CFR Part 84 as follows:

PART 84—APPROVAL OF RESPIRATORY PROTECTIVE DEVICES

1. The authority citation for Part 84 continues to read as follows:

Authority: 29 U.S.C. 651 *et seq.,* and 657(g); 30 U.S.C. 3, 5, 7, 811, 842(h), 844.

Subpart G—General Construction and Performance Requirements

§ 84.60 [Amended]

2. Amend § 84.60(a) to remove the phrase ''in Subparts H through L'' and add in its place the phrase ''in Subparts H through KK''.

§ 84.63 [Amended]

3. Amend § 84.63(a), (b), and (c) to remove the phrase ''in Subparts H through L'' and add in its place the phrase ''in Subparts H through KK''.

§ 84.64 [Amended]

4. Amend § 84.64(b) to remove the phrase ''in Subparts H through L'' and add in its place the phrase ''in Subparts H through KK''.

§ 84.65 [Amended]

5. Amend § 84.65(a) to remove the phrase ''in Subparts H through L'' and add in its place the phrase ''in Subparts H through KK''.

Subpart H—Self-Contained Breathing Apparatus

6. Amend § 84.70 to:

a. Redesignate paragraphs (a) through (d) as (b) through (e), respectively; and

b. Add a new paragraph (a) to read as follows:

§ 84.70 Self-contained breathing apparatus; description.

(a) Limitation on Scope. None of the provisions of Subpart H apply to closed-circuit escape respirators to be approved specifically for escape from hazardous atmospheres. Such respirators are covered under the provisions of Subpart O—Closed-Circuit Escape Respirators.

* * * * *

7. Amend Part 84 to add Subpart O to read as follows:

Subpart O—Closed-Circuit Escape Respirators

Sec.

84.300 Closed-circuit escape respirator; description.
84.301 Applicability to new and previously approved CCERs.
84.302 Required components, attributes, and instructions.
84.303 General testing conditions and requirements.
84.304 Capacity test requirements.
84.305 Performance test requirements.
84.306 Wearability test requirements.
84.307 Environmental treatments.
84.308 Additional testing.
84.309 Additional testing and requirements for dockable CCERs.
84.310 Post-certification testing.
84.311 Registration of CCER units upon purchase.

Subpart O—Closed-Circuit Escape Respirators

§ 84.300 Closed-circuit escape respirator; description.

A closed-circuit escape respirator (CCER), technically a subset of self-contained breathing apparatuses (SCBA) which are otherwise covered under Subpart H of this part, is used in certain industrial and other work settings in emergencies to enable users to escape from atmospheres that can be immediately dangerous to life and health. Known in the mining community as self-contained self-rescuer (SCSR)s, CCERs are relied upon by miners to escape dangerous atmospheres in underground coal mines after a mine fire or explosion. CCERs are commonly worn on workers' belts or stored in close proximity to be

accessible in an emergency. They are relatively small respirators that employ either compressed oxygen or a chemical source of oxygen, plus a chemical system for removing exhaled carbon dioxide from the user's recirculated air. Users re-breathe their exhalations after the oxygen and carbon dioxide levels have been restored to suitable levels, which distinguishes these ''closed-circuit'' self-contained respirators from ''open-circuit'' self-contained respirators, which vent each exhalation.

§ 84.301 Applicability to new and previously approved CCERs.

(a) This subpart applies to the following CCERs:

(1) All CCERs submitted to NIOSH for a certificate of approval after [DATE RULE BECOMES EFFECTIVE]; and

(2) All CCERs sold after [DATE 3 YEARS AFTER DATE RULE BECOMES EFFECTIVE].

(b) After [DATE 6 YEARS AFTER DATE RULE BECOMES EFFECTIVE], NIOSH certificates of approval are rescinded, without further action or notification by NIOSH, for all CCERs certified by NIOSH prior to [DATE RULE BECOMES EFFECTIVE].

§ 84.302 Required components, attributes, and instructions.

(a) Each CCER must include components and/or attributes appropriate to its design, as follows:

(1) *Eye protection:* Each CCER must include safety goggles or an escape hood lens that protects against impact, fogging, and permeation by gas, vapor, and smoke, as specified under § 84.308(c) of this subpart;

(2) *Thermal exposure indicators:* If the manufacturer specifies a maximum and/or minimum environmental temperature limit for storage of the CCER, then the CCER must include a component, an attribute, or other means by which a person can determine whether the CCER has been exposed to temperatures that exceed the limit(s);

(3) *Chemical bed physical integrity indicators:* The CCER must include a component, an attribute, or other means by which a person can detect any damage or alteration of the chemical oxygen storage or chemical carbon dioxide scrubber that could diminish the NIOSH-certified performance of the CCER, as tested under this subpart;

(4) *Oxygen storage vessel:* If the CCER includes an oxygen storage vessel, the vessel must be approved by the U.S. Department of Transportation (DOT) under 49 CFR Part 107, ''Hazardous Materials Program Procedures,'' unless exempted under Subpart B of 49 CFR Part 107;

(5) *Tamper-resistant/tamper-evident casing:* If the CCER is not designed for its casing to be opened prior to use for an actual escape (e.g., for maintenance, escape drills, or inspection of the components), the casing must include a component, an attribute, or other means to prevent a person from accidentally opening the casing and, upon such opening, to either prevent the casing from being closed or to clearly indicate to a potential user that the casing has been previously opened; and

(6) *Moisture damage indicators:* If the CCER is not designed for its casing to be opened for inspection of its internal components, the casing must include a component, an attribute, or other means by which a person can detect any ingress of water or water vapor that could diminish the NIOSH-certified performance, as tested under this subpart.

(b) The components of each CCER must meet the general construction requirements specified in Subpart G, § 84.61.

(c) The CCER must be resistant to the permeation of the breathing circuit by gasoline vapors. To verify such resistance, NIOSH will test one unit by applying the gasoline vapor permeation test specified on the NIOSH Web page at *http://www.cdc.gov/niosh/npptl/resources/certpgmspt/default.html,* using a breathing machine applying a ventilation rate of 40 liters per minute, performing the test for the longest duration achieved by any of the units that underwent the capacity testing specified under § 84.304.

(d) Exposed parts of the CCER must not be composed of metals or other materials that could, upon impact, create frictional sparks or that could store or generate static electrical charges of sufficient energy to ignite flammable gaseous mixtures.

(e) The design, construction, or materials of the CCER must not constitute a hazard to the user as a result of the wearing, inspection, or use of the CCER.

(f) Each new CCER unit must be accompanied by instructions and a service life plan. These documents must be clearly written.

(1) Instructions must address the following topics and elements:

(i) An explanation of how the CCER works;

(ii) A schematic diagram of the CCER;

(iii) Procedures for donning and use;

(iv) Procedures for inspecting the operating condition of the CCER;

(v) Procedures and conditions for storage, including but not limited to any recommended minimum and maximum temperatures for storage;

(vi) Limitations on use, including but not limited to any recommended minimum and maximum temperatures for use;

(vii) Procedures for disposal; and

(viii) Procedures for registration of the unit with NIOSH, pursuant to § 84.311 of this subpart.

(2) The service life plan must completely address the following topics:

(i) The maximum number of years, from the date of manufacture, that the unit may remain available for use; this limit is intended to prevent the continued use of a unit that the applicant cannot assure would continue to perform as certified by NIOSH, due to reasonably foreseeable degradation of materials used in its construction;

(ii) Any other conditions, other than that specified under paragraph (f)(2)(i) of this section, that should govern the removal from service of the CCER; and

(iii) Any procedures by which a user or others should inspect the CCER, perform any maintenance possible and necessary, and determine when the CCER should be removed from service.

§ 84.303 General testing conditions and requirements.

(a) NIOSH will conduct capacity and performance tests on the CCER using a breathing and metabolic simulator to provide quantitative evaluations and human subjects on a treadmill to provide qualitative evaluations. Information on the design and operation of the simulator is available from the NIOSH Web page at *http://www.cdc.gov/niosh/npptl/resources/certpgmspt/default.html.*

(b) Capacity, performance, and wearability tests will continuously monitor the stressors listed in Table 1. The stressors and their respective acceptable ranges will be measured at the interface between the CCER and the mouth by instruments capable of breath-by-breath measurement. Stressor measurements will be evaluated as one-minute averages. The operating averages of each stressor will be calculated upon the completion of each test as the average of the one-minute measurements of the stressor recorded during the test. The level of any excursion for a stressor occurring during a test will be defined by the one-minute average value(s) of the excursion(s).

TABLE 1—MONITORED STRESSORS AND THEIR ACCEPTABLE RANGES

Stressor	Acceptable range operating average	Acceptable range excursion
Average inhaled CO_2	<1.5%	≤4%
Average inhaled O_2	>19.5%	≥15%
Peak Breathing Pressures	$\Delta P \leq 200$ mm H_2O	$-300 \leq \Delta P \leq 200$ mm H_2O.
Wet-bulb temperature [1]	<43 °C	≤50 °C

[1] Wet-bulb temperature is a measurement of the temperature of a wet surface. It represents the temperature of the inhaled breathing gas in the CCER user's trachea.

(c) Capacity and performance tests will conclude when the stored breathing gas supply has been fully expended.

(d) NIOSH will determine a CCER to have failed a capacity, performance, or wearability test if any of the following occurs:

(1) A one-minute average measurement of any stressor listed in Table 1 occurs outside the acceptable excursion range specified in Table 1; or an average stressor measurement calculated at the completion of a performance or capacity test exceeds the acceptable operating average range specified in Table 1; or

(2) A human subject cannot complete the test for any reason related to the CCER, as determined by NIOSH.

(e) Unless otherwise stated, tests required under this subpart will be conducted at the following ambient conditions:

(1) Ambient temperatures of 23C ± 3C; and

(2) Atmospheric pressures of 735 mm Hg ± 15 mm Hg.

§ 84.304 Capacity test requirements.

(a) NIOSH will conduct the capacity test on a total of eight to ten of the units submitted for approval, as follows:

(1) Three units will be tested on a breathing and metabolic simulator in the condition in which they are received from the applicant;

(2) Two units will be tested on a breathing and metabolic simulator after being subjected to the environmental treatments specified in § 84.307 of this subpart;

(3) Two units will be tested on a breathing and metabolic simulator at the cold-temperature limit recommended by the manufacturer under § 84.302(f)(1)(F) of this subpart, after the unit has been stored for a minimum of 24 hours at this limit; and

(4) One unit, in the condition in which it is received from the applicant, will be tested by a human subject on a treadmill.

(5) To approve a CCER under a Cap 3 rating for use in coal mines, two units will also be tested by a human subject under the specifications of §§ 84.99 and 84.100 of this part that are applicable to a one-hour Man test 4.

(b) The capacity test will begin upon the first inhalation from or exhalation into the unit.

(c) Each unit will be tested at a constant work rate, depending on the capacity specified by the manufacturer, according to the requirements specified in Table 2. All volumes are given at standard temperature (0 °C) and pressure (760 mm Hg), dry, unless otherwise noted.

(d) NIOSH will rate an approved CCER using the appropriate capacity rating, as specified in Table 2.

TABLE 2—CAPACITY TEST REQUIREMENTS

Capacity rating	Capacity (L of O_2)	$\dot{V}O_2$ (L/min)	$\dot{V}CO_2$ (L/min)	$\dot{V}e$ (L/min)	RF (Breaths/min)
Cap 1	$20 \leq L \leq 59$	2.50	2.50	55	22
Cap 2	$60 \leq L \leq 79$	2.00	1.80	44	20
Cap 3	$L \geq 80$	1.35	1.15	30	18

$\dot{V}O_2$ = volume of oxygen consumed/min; $\dot{V}CO_2$ = volume of carbon dioxide produced/min.
$\dot{V}e$ = ventilation rate in liters of air per minute.
RF = respiratory frequency.

(e) NIOSH will document the least value achieved by the seven units tested using the breathing and metabolic simulator. NIOSH will quantify this value of achieved capacity within an increment of 5 liters, rounding intermediate values to the nearest lower 5 liter increment.

§ 84.305 Performance test requirements.

(a) NIOSH will conduct the performance test on a total of six of the units submitted for approval, as follows:

(1) Three units will be tested on a breathing and metabolic simulator in the condition in which they were received from the applicant; and

(2) Two units will be tested on a breathing and metabolic simulator after being subjected to the environmental treatments specified in § 84.307 of this subpart; and

(3) One unit will be tested, in the condition in which it was received from the applicant, by a human subject on a treadmill.

(b) Except as provided under paragraph (c) of this section, the performance test will apply a repeating cycle of work rates, according to the sequence and requirements specified in Table 3, until the oxygen supply of the unit is exhausted.

(c) Testing of CCERs with less than 50 liters of capacity, as determined by the capacity testing under § 84.304, will require the submission of additional test units to fully apply the work-rate test sequence and requirements specified in Table 3. The testing of each individual unit will complete the cycle specified in Table 3 until the breathing supply of the initial test unit is exhausted. This initial test unit will then be replaced by a second unit, which will continue the test cycle, beginning at the work rate in the cycle at which the initial unit was exhausted, and completing the full period specified in Table 3 for that work rate before proceeding to the subsequent work rate, if any, specified in Table 3. Each initial testing unit will be replaced as many times as necessary to complete the cycle, not to exceed two replacement units per initial test unit.

(d) The performance test will begin with two exhalations into the unit at the specified ventilation rate to determine the design's susceptibility to hypoxia.

TABLE 3—PERFORMANCE TEST REQUIREMENTS

Work-rate test sequence	Duration per cycle (min)	$\dot{V}O_2$ (L/min)	$\dot{V}CO_2$ (L/min)	$\dot{V}e$ (L/min)	RF (breaths/min)
1. Peak	5	3.00	3.20	65.0	25
2. High	15	2.00	1.80	44.0	20
3. Low	10	0.50	0.40	20.0	12

$\dot{V}O_2$ = volume of oxygen consumed/min; $\dot{V}CO_2$ = volume of carbon dioxide produced/min.
Ve = ventilation rate in liters of air per minute.
RF = respiratory frequency.

§ 84.306 Wearability test requirements.

(a) NIOSH will conduct the wearability test on a total of three of the units submitted for approval. Three human subjects (two (2) males and one (1) female), one subject per unit, will conduct the test. The three subjects will range in height and weight as follows: one subject of height ≥ 174 cm and weight ≥ 90 kg; one subject of *either* 163 cm ≤ height < 174 cm, regardless of weight, or 72 kg ≥ weight < 90 kg, regardless of height; and one subject of height < 163 cm and weight < 72 kg. All units tested must meet all conditions specified in this section to receive approval.

(b) NIOSH will evaluate the ease and speed with which users can don the CCER, as follows:

(1) Each test subject must be able to don the CCER correctly, isolating the lungs within 30 seconds; [1] and

(2) A CCER must not include any design, construction, or material characteristic that can be anticipated or demonstrated, under plausible conditions, to hinder the user in the correct and timely donning of the CCER.

(c) NIOSH will continuously monitor CCER use by each test subject during the activities specified in Table 4 to evaluate the ability of the CCER to provide an adequate and uninterrupted breathing supply, including but not limited to the requirements of § 84.303(b) of this subpart, without harming or hindering a user. NIOSH will *not* approve a CCER if the use of any unit during these activities indicates any potential for the CCER to harm or hinder the user or to fail to provide an adequate and uninterrupted breathing supply to the user during reasonably anticipated conditions and activities of an escape.

TABLE 4—WEARABILITY TEST REQUIREMENTS

Activity	Minimum duration
Sitting	1 min.
Stooped walking	1 min.
Crawling	1 min.
Lying on left side	1 min.
Lying on right side	1 min.
Lying on back	1 min.
Bending over to touch toes	1 min.
Turning head from side to side	1 min. (at least 10 times).
Nodding head up and down	1 min. (at least 10 times).
Climbing steps or a laddermill	1 min. (1 step/sec).
Carrying 50-lb bag on treadmill at 5 kph	1 min.
Lifting 20-lb weight from floor to an upright position	1 min. (at least 10 times).
Running on treadmill at 10 kph	1 min.

§ 84.307 Environmental treatments.

(a) Four units submitted for approval will be tested for capacity and performance, pursuant to the requirements of §§ 84.303–84.305 of this subpart, after exposure to environmental treatments simulating extreme storage temperatures, shock, and vibration.

(b) The units will be stored for sixteen hours at a temperature of −45 °C and for forty-eight hours at a temperature of 71 °C. The maximum rate of change for thermal loading shall not exceed 3 °C per minute and constant temperatures shall be maintained within ± 2 °C.

(c) The units will be subjected to physical shock according to the following procedure:

(1) The unit will be dropped six times from a height of one meter onto a concrete surface; and

(2) Each drop will test a different orientation of the unit, with two drops along each major axis.

(d) The units will be subjected to vibration according to the following procedure:

(1) The unit will be firmly secured to a shaker table, which will be vibrated with motion applied along a single axis for 180 minutes;

(2) The unit will be vibrated one axis at a time along each of three axes for a total of nine hours; and

(3) The vibration frequency regimen applied to each axis will be cyclical, repeating the sequence and specifications provided in Table 5 every twenty minutes.

TABLE 5—VIBRATION TEST SEQUENCE

Sequence	Frequency (Hertz)	Acceleration g (± peak)
1.	5–92	2.5
2.	92–500	3.5
3.	500–2000	1.5

[1] This time limit does not apply to any additional steps that might be required after the lungs are protected to adjust the unit for wear.

§ 84.308 Additional testing.

(a) NIOSH will conduct additional tests, as indicated below, on one or more of the units submitted for approval. Each unit tested must meet the conditions specified in these tests for the CCER to receive approval.

(b) NIOSH will perform safety hazard tests on any CCER that stores more than 200 liters of oxygen or that stores compressed oxygen at pressures exceeding 3,000 psi. The applicant must submit 15 units in addition to the 21–23 units required for testing under §§ 84.304–84.307 of this part. These units will be evaluated for fire and explosion hazards using the tests specified in the following reports published by the Bureau of Mines: Reports of Investigations 9333 (1991), pages: 4–18; 8890 (1984), pages 6–62; and PRC Report No. 4294 (1980), pages: 18–62. These reports are available from NIOSH upon request; to request a copy, call 1–800–CDC–INFO (232–4636).

(c) NIOSH will perform the following tests on the eye protection (gas-tight goggles or escape hood lens) of one or more units of every CCER submitted for approval:

(1) NIOSH will test the effectiveness of the eye protection against dust using the method specified in Clause 13 of International Standards Organization (ISO) 4855 (First edition, 1981). The result will be satisfactory if the reflectance after the test is equal to or greater than 80% of its value before testing.

(2) NIOSH will test the effectiveness of the eye protection against gas using the method specified in Clause 14 of ISO 4855. The test must not result in staining of the area enclosed by the eye protection.

(3) NIOSH will test the durability of the eye protection using the method specified in Sub-clause 3.1 of ISO 4855 of ISO 4855.

(4) NIOSH will test the eye protection's resistance to fogging in accordance with the method specified in European Standard EN 168: 2002.

(5) The standards required in this section are incorporated by reference into this section with the approval of the Director of the Federal Register under 5 U.S.C. 552(a) and 1 CFR part 51. All approved material is available for inspection at the National Archives and Records Administration (NARA). For information on the availability of this material at NARA, call 202–741–6030 or go to *http://www.archives.gov/federal_register/code_of_federal_regulations/ibr_locations.html.* A copy is also available for inspection at NIOSH, National Personal Protection Technology Laboratory, Bruceton Research Center, 626 Cochrans Mill Road, Pittsburgh, PA 15236. To arrange for an inspection at NIOSH, call 412–386–6593. Copies of the ISO standard 4855 are also available for purchase from the International Organization for Standardization (ISO) Web site at: *http://www.iso.org/iso/store.htm.* Copies of the European Standard 168 are available for purchase from BSI British Standards Web site at: *http://www.bsigroup.com/en/Standards-and-Publications.*

§ 84.309 Additional testing and requirements for dockable CCERs.

(a) NIOSH will conduct additional testing of the CCERs that are designed to allow the user to resupply the oxygen source and the carbon dioxide scrubber while using the respirator during an escape.

(1) NIOSH will test the docking mechanism and procedure to ensure that they maintain the integrity of the breathing circuit (against the intake of hazardous fumes or gases) and the continuity of the breathing gas supply throughout the docking process.

(2) NIOSH will test the docking mechanism and procedure to ensure that users can employ the docking process reliably, safely, and quickly under escape conditions.

(b) NIOSH will designate CCERs that pass the tests specified in this section as ''Dockable''.

(c) NIOSH will assign the capacity rating to the dockable CCER, as specified under § 84.304(d) of this part, by conducting the capacity testing using only the breathing gas supply included for the initial use of the wearable apparatus.

(d) NIOSH will test the supplemental capacities of all breathing gas resupply units produced by the manufacturer for use with the dockable CCER. Such tests will follow procedures consistent with those specified under § 84.304 of this part, including the rating requirements in § 84.304(d). The manufacturer must label the breathing gas resupply unit to indicate its capacity as tested by NIOSH and its compatibility with the CCER for which it is designed.

(e) NIOSH may require the applicant to provide additional units of the CCER and breathing gas resupply units to conduct the testing specified in this section.

(f) NIOSH will not approve a CCER with docking components, with or without the ''Dockable'' NIOSH designation, unless it satisfies the testing and other requirements of this section.

§ 84.310 Post-certification testing.

(a) NIOSH will periodically test the capacity and performance of units of approved CCERs.

(b) NIOSH may test units that are new and/or units that have been deployed in the field and have remaining service life.

(c) NIOSH will conduct such testing pursuant to the methods specified in §§ 84.303–84.305 of this subpart, except as provided under paragraph (d) of this section.

(d) The numbers of units of an approved CCER to be tested under this section may exceed the numbers of units specified for testing in §§ 84.304–84.305 of this subpart.

(e) Failure of a unit to meet the capacity and performance requirements of this section may result in revocation of the approval for the CCER or in requirements for specific remedial actions to address the cause or causes of the failure.

(f) NIOSH will replace deployed units obtained for testing with new units at no cost to the employer.

(g) To maintain the approved status of a CCER, an applicant must make available for purchase by NIOSH, within three months of a NIOSH purchase request, the number of units requested by the Institute. Within any 12 month period, NIOSH will not request to purchase more than 100 units for post-certification testing.

§ 84.311 Registration of CCER units upon purchase.

(a) Each CCER unit sold will include, within the user instructions, a copy of procedures for registering the unit with NIOSH. The applicant can obtain a copy of these procedures from from the NIOSH Web page: *http://www.cdc.gov/niosh/npptl/resources/certpgmspt/default.html.*

(b) The applicant shall notify in writing each purchaser of the purpose of registering a unit with NIOSH, as specified under paragraph (c) of this section. If the purchaser is a distributor of the CCER, the applicant must request in writing that the distributor voluntarily notify in writing each of its purchasers of the purpose of registering a unit with NIOSH, as specified under paragraph (c) of this section.

(c) ''The National Institute for Occupational Safety and Health (NIOSH) requests, but does not require, that each purchaser of this respirator register all units purchased with NIOSH. Registration will enable NIOSH, which certified this model of respirator, to attempt to notify you if a problem is discovered that might affect the safety or performance of this respirator.

Registration will also assist NIOSH in locating deployed units to periodically evaluate whether this respirator is remaining effective under field conditions of storage and use.''

Editorial Note: This document was received at the Office of the Federal Register on December 5, 2008.

Dated: July 23, 2008.

Michael O. Leavitt,

Secretary, Department of Health and Human Services.

[FR Doc. E8–29235 Filed 12–9–08; 8:45 am]

BILLING CODE 4163–18–P

DEPARTMENT OF HEALTH AND HUMAN SERVICES

42 CFR Part 84

RIN 0920–AA04

Quality Assurance Requirements for Respirators; Notice of Proposed Rulemaking

AGENCY: Centers for Disease Control and Prevention.

ACTION: Notice of proposed rulemaking.

SUMMARY: The Department of Health and Human Services (HHS) proposes to update existing quality assurance requirements under 42 CFR Part 84 for the manufacture of all respirators approved by the National Institute for Occupational Safety and Health (''NIOSH'') of Centers for Disease Control and Prevetion (CDC), HHS. The proposed new requirements would require respirator manufacturers to be compliant with a widely adopted voluntary consensus standard for quality management systems, would update technical requirements particular to quality assurance for manufacturing of NIOSH-approved respirators, and would establish requirements governing the related quality assurance oversight activities of NIOSH.

DATES: CDC invites comments on this proposed rule from interested parties. Comments must be received by February 9, 2009.

ADDRESSES: You may submit comments, identified by RIN: 0920–AA04, by any of the following methods:

- *Federal eRulemaking Portal: http://www.regulations.gov*. Follow the instructions for submitting comments.
- *E-mail: niocindocket@cdc.gov*. Include ''RIN: 0920–AA04'' and ''42 CFR pt. 84'' in the subject line of the message.
- *Mail:* NIOSH Docket Office, Robert A. Taft Laboratories, MS–C34, 4676 Columbia Parkway, Cincinnati, OH 45226.

Instructions: All submissions received must include the agency name and docket number or Regulatory Information Number (RIN) for this rulemaking, RIN: 0920-AA04. All comments received will be posted without change to *http://www.cdc.gov/niosh/docket*, including any personal information provided. For detailed instructions on submitting comments and additional information on the rulemaking process, see the ''Public Participation'' heading of the **SUPPLEMENTARY INFORMATION** section of this document.

Docket: For access to the docket to read background documents or comments received, go to *http://www.cdc.gov/niosh/docket*.

FOR FURTHER INFORMATION CONTACT: William Newcomb, NIOSH National Personal Protective Technology Laboratory (''NPPTL''), Pittsburgh, PA, (412) 386–4034 (this is not a toll-free number). Information requests can also be submitted by e-mail to *niocindocket@cdc.gov*.

SUPPLEMENTARY INFORMATION:

I. Public Participation

Interested persons or organizations are invited to participate in this rulemaking by submitting written views, arguments, recommendations, and data. Comments are invited on any topic related to this proposal.

Comments submitted by e-mail or mail should be addressed to the ''NIOSH Docket Officer'' , titled ''NIOSH Docket #109'', and should identify the author(s), return address, and a phone number, in case clarification is needed. Comments can be submitted by e-mail to: *niocindocket@cdc.gov*. E-mail comments can be provided as e-mail text or as a Word or Word Perfect file attachment. Printed comments can be sent to the NIOSH Docket Office at the address above. All communications received on or before the closing date for comments will be fully considered by CDC.

All comments submitted will be available for examination in the rule docket (a publicly available repository of the documents associated with the rulemaking) both before and after the closing date for comments. A complete electronic docket containing all comments submitted will be available on the NIOSH Web page at *http://www.cdc.gov/niosh/docket*, and comments will be available in writing by request. NIOSH includes all comments received without change in the docket, including any personal information provided.

II. Background

A. Introduction

Under 42 CFR Part 84, ''Approval of Respiratory Protective Devices'' (''Part 84'') NIOSH approves respirators used by workers in mines and other workplaces for protection against hazardous atmospheres. The Mine Safety and Health Administration (''MSHA'') and the Occupational Safety and Health Administration (''OSHA'') require U.S. employers to supply NIOSH-approved respirators to their employees whenever the employer requires the use of respirators. In addition, MSHA co-approves with NIOSH all respirators used in mine emergencies and mine rescue.

As provided under Subpart E of Part 84, NIOSH presently requires, as a condition of approval, that the manufacturer of a NIOSH-approved respirator maintain a quality control plan designed to ensure that the products manufactured are of adequate quality and perform to the specifications under which they were approved by NIOSH. To provide quality assurance oversight, NIOSH conducts audits of manufacturing facilities (site audits) and of finished products (product audits). Additionally, NIOSH investigates complaints from employers and users concerning the performance of approved respirators in their workplaces. These audits and investigations can result in a variety of compliance actions by NIOSH, including requesting product recalls, stop-sale orders, retrofits, advisories, and various remedial quality control actions.

B. Background and Significance

Employers rely upon NIOSH-approved respirators to protect their employees from airborne toxic contaminants and oxygen-deficient environments. More than 3.3 million private sector employees in the United States wear respirators for certain work tasks. The most effective and reliable means of protecting workers from airborne contaminants is to prevent the workplace air from substantial contamination in the first place through enclosed processes and ventilation engineering. Similarly, the most effective and reliable means of protecting workers from oxygen-deficient environments is to prevent their causes or entry into them by workers. However, it is not technologically or economically feasible in all workplaces and operations to reduce airborne concentrations of

contaminants to safe levels and to prevent exposure to oxygen-deficient environments. In such cases, workers depend on respirators to protect them from asphyxiation or airborne contaminants that are known or suspected to cause acute and chronic health effects, such as heavy metal poisoning, acid burns, chronic obstructive pulmonary disease, silicosis, neurological disorders, and cancer.

As immediate protection, respirators must not only be certified as safe, functional, and effective; they must also be manufactured to perform reliably. This is exceptionally important because in many circumstances, particularly involving chronic health effects that develop gradually or after a long latent period, the worker has no way of knowing if a respirator is failing to provide the protection for which it was certified. Occupational cancers, for example, typically become symptomatic decades following the toxic exposures. Even for acute health effects, the worker many not be able to detect defective performance of the respirator prior to the toxic exposure, upon which it might be too late to avoid serious injury or death.

Respirator manufacturers and NIOSH have critical roles in assuring employers, other purchasers of respirators, and workers that their respirators will provide the protection that is implied by their NIOSH certification. This rulemaking, which has been identified as a priority among the policymaking needs of the NIOSH respirator certification program by respirator manufacturers, employers, and other stakeholders of the program, [1] is intended to strengthen this assurance.

C. Need for Rulemaking

The current requirements of Part 84 for a quality control plan (Subpart E) were established in 1972. Since that time, the quality management practices employed in manufacturing and other industries have developed substantially and have become more effective. Quality management systems have developed and become widely diffused. These systems direct the work of an organization regarding the quality of its products and services through a highly focused system of processes, documentation, resources, and monitoring. Central to this progress, particularly in manufacturing industries, are quality assurance methods that have improved through the increasing application of statistical process control methods (monitoring methods for achieving consistent satisfactory performance of each process involved in the manufacture of a final product). This progress has enabled manufacturers in many industries to reduce levels of product nonconformance with design and performance standards to a diminishingly small fraction of their total product output.

Revising Part 84 to incorporate up-to-date requirements for quality management is a necessary step to facilitate progress in respirator manufacturing that has been achieved in other manufacturing concerns. Although most respirator manufacturers maintain effective quality management systems, more than eight percent of NIOSH audits of manufacturing facilities since 1999 have found nonconformances in product quality requiring a cessation of sales and remedial actions by the approval holder. Approximately 40 percent of NIOSH product audits conducted since 1999 have identified a nonconformance with certification requirements and five percent have resulted in a product recall or retrofit. In addition, of the 40 field problem investigations NIOSH conducts per year, 45 percent require corrective actions, 20 percent result in a recall request, and 2.5 percent result in NIOSH issuing a stop-sale request. The levels of nonconformance indicated by these statistics, although they cover a small number of the 7,100 respirators approved by NIOSH, suggest that some respirator manufacturers can make substantial advances in product quality by instituting improved quality management systems.

In addition to facilitating quality management in respirator manufacturing, this proposed rule provides NIOSH with the opportunity to more efficiently deploy its auditing resources to focus on quality matters that are highly specific to assuring respirator performance. Over the past decade, the number of approved respirators has increased substantially. NIOSH has issued more than 5,100 of the 7,100 active approvals since 1995. In October 2007, there were 87 approval holders operating manufacturing facilities in the United States and foreign countries. The growth of the industry, the diversity of its products, and the globalization of its operations, have strained NIOSH resources applied to providing adequate quality assurance audits and related services.

This proposed rule would incorporate into Part 84 the ISO Q9001:2000 standard: *Quality management systems—Requirements,* 3rd Edition, established by the International Organization for Standardization (ISO),[2] which is a national and international consensus standard widely adopted by leading manufacturers in many industries. All respirator manufacturers holding or seeking a NIOSH approval would have to be compliant with this standard. Presently, approximately 77 percent of approval holders are voluntarily registered as compliant with this standard, having undergone auditing to establish compliance, and most of the remaining approval holders claim also to be compliant.

Incorporation of the ISO standard would elaborate and enhance the existing Part 84 quality control requirements. The existing requirements are general except for those governing the use of product inspection sampling plans. The ISO standard, by contrast, requires the use of a clearly specified, comprehensive, systematic, quality management system, providing specific parameters for quality management system documentation, management responsibilities, resource management, product realization, and measurement, analysis and quality management improvement. Incorporation of the ISO standard would foster better quality management consistently throughout this critical safety product market.

With respect to quality control activities governed by the current provisions of Part 84, the proposed rule would also update the existing requirements governing the inspection sampling plans used by respirator manufacturers (42 CFR 84.41(b)). The existing requirements constrain manufacturers to conducting extensive inspection regardless of the design and sophistication of their quality management systems. The proposed rule would enable manufacturers to establish product inspection approaches suited to their quality management

[1] All Manufacturers Meeting—Application Log-in Time and flowchart of application process; March 22, 2000, NIOSH, Morgantown, WV.

Private Sector Lab meeting to discuss improvement concepts for updating quality assurance and administrative requirements in the regulation (42CFR 84); June 12–13, 2000, ICS Inc., Brunswick, OH.

Stakeholder and Public meeting concerning Quality Assurance and Administrative Requirements for Approval of Respirators, (FR65:129:41472), August 8, 2000, Quality Hotel and Suites, Arlington, VA; August 16, 2000, Embassy Suites, Burlingame, CA.

NIOSH/NPPTL CBRN and Quality Assurance Public Meeting (FR68:107:33494–33495), June 25, 2003, Hilton Garden Inn, Canonsburg, PA.

NIOSH/NPPTL Public Meeting—Quality Assurance Module for Respiratory Protective Equipments (FR 65:180:54458–54459), October 16, 2003, Radisson Hotel, Morgantown, WV.

[2] ISO Q9001:2000 is available from the American National Standards Institute (ANSI), 25 West 43rd St., New York, NY 10036; Web page: *http://www.ansi.org*; phone 212–642–4900.

systems and the degree of process control they achieve. The change would save inspection resources and costs for manufacturers achieving high levels of process control in any elements of their production processes.

D. Public Meetings for Discussion and Comment

NIOSH held public meetings to discuss underlying issues and technical matters addressed in this proposed rule on August 8, 2000, at the Quality Hotel and Suites, Arlington, VA; on August 16, 2000, at the Embassy Suites, Burlingame, CA; June 25, 2003, at the Hilton Garden Inn, Canonsburg, PA; and on October 16, 2003, at the Radisson Hotel, Morgantown, WV.[3] Official transcripts of the meetings are available from the NIOSH Docket Office at the address provided above. Most comments were generally supportive of the need to update the quality assurance and control provisions of Part 84.

NIOSH will convene public meetings to provide to stakeholders an opportunity to comment orally on this rulemaking during the comment period. The meetings will be in the vicinities of Washington DC and Los Angeles, CA and are announced in a separate notice in this issue of the **Federal Register**.

III. Summary of Proposed Rule

This proposed rule would establish new quality assurance and control requirements for manufacturers of respirators approved by NIOSH, or NIOSH and MSHA, under 42 CFR Part 84—Approval of Respiratory Protective Devices. The current provisions of Subpart E would be replaced almost entirely. In addition, some related provisions of several other subparts of Part 84 would be revised, added, or removed. The following is a section-by-section summary which describes and explains the provisions of the rule. The public is invited to provide comment on any aspect of the proposed rule. The complete regulatory text for this proposed rule is provided in the last section of this notice.

Subpart A

Definitions (Section 84.2)

This section provides definitions for Part 84. It would be amended to add definitions of terms included in the proposed revision of Subpart E, to revise definitions related to Subpart E, and to make other clarifications. Definitions requiring explanation are identified in the following discussion.

Under paragraph (a), the definition of ''applicant'' is revised to clarify that the applicant remains an applicant, for the purposes of the regulation, after receiving a product approval from NIOSH. This is necessary because Subpart E uses the term applicant with respect to quality assurance provisions that apply to the applicant during the manufacture of the approved product and subsequently.

Paragraph (d) defines an ''Authorized NIOSH Representative'' to clarify that NIOSH contractors and their employees may serve as authorized representatives, as well as NIOSH employees. This is germane to the planned use of contractor employees by NIOSH in audits of manufacturing facilities.

Paragraph (w) defines ''manufacturing facility'' to clarify that the buildings of any supplier whose quality system is a component of the applicant's quality system will be potentially subject to NIOSH facility audits under Subpart E. This is important for NIOSH efforts to oversee quality assurance for the increasing number of respirator manufacturers that are not vertically integrated manufacturing enterprises. While NIOSH does not have legal authority to mandate access and cooperation to conduct such facility audits, NIOSH respirator approvals are contingent on voluntary acceptance of such audits and necessary cooperation with the audits by all facilities involved in the respirator manufacturing process. If a supplier to an applicant whose quality system is integral to that of the applicant were to refuse to allow such an audit or refuse to cooperate sufficiently to permit the completion of such an audit, then NIOSH would either deny the associated application for approval or, if the respirator were already approved, NIOSH would revoke the approval.

Subpart B—Application for Approval

Application Procedures (Section 84.10).

This section specifies procedures for applicants seeking the approval of a respirator under Part 84. It would be amended for administrative reasons, clarifications, and in support of the quality assurance requirements of Subpart E.

Paragraph (b) would be added to notify potential applicants that complete application procedures are available on the NIOSH Web page as indicated.

Paragraph (c) would be added to notify applicants who are holders of prior approvals that non-compliance with the quality assurance requirements of Subpart E would result in the suspension of processing of any new applications the applicant might have submitted. This is expected to provide incentive for the applicant to maintain adequate quality assurance and to remediate quality assurance problems identified by NIOSH in a timely fashion. Moreover, NIOSH believes it is sensible and efficient use of federal technical and administrative resources to require an applicant to remedy existing quality assurance problems prior to considering the approval of additions to the applicant's respirator product line which would extend the quality assurance responsibilities of the applicant.

Paragraph (d) clarifies that NIOSH may use contractors as well as its own employees in its certification and auditing activities under Part 84.

Paragraph (e) is not substantively changed. It would be revised to replace the specification of the ''Certification and Quality Assurance Branch'' with ''NIOSH''.

Contents of Application (Section 84.11)

This section specifies key elements of the Standard Application Package for applicants seeking approval under Part 84. It would be amended to be consistent with new quality assurance provisions under Subpart E, to revise or remove provisions that are outdated, and to reflect current practice.

Paragraphs (a) and (b) are current provisions of Part 84 that have been simplified since NIOSH now provides detailed instructions concerning application elements in the Standard Application Procedure available to applicants from the NIOSH Web page at *http://www.cdc.gov/niosh/npptl/resources/certpgmspt/default.html*.

Paragraph (c) would require applicants to include a user instruction manual. Applicants currently include these, which contain information essential to NIOSH for testing to determine that a respirator will perform as certified and that users will have adequate relevant information, such as length of the service life of the respirator.

Paragraphs (d) through (f) would provide for application contents that are consistent with the new quality assurance provisions of Subpart E. See the summary of Subpart E provisions for discussion of these contents.

Paragraph (g) would require the applicant to provide a table that cross-references the certification requirements under this Part applicable to the respirator with the stage or stages in the manufacturing process in which the

[3] Notice of these meetings were published in the **Federal Register** (FR65:129:41472) (FR68:107:33494–33495) (FR 65:180:54458–54459). NIOSH also sent a letter announcing the meetings to known stakeholders and posted it on the NIOSH Web page *http://www.cdc.gov/niosh/npptl*.

particular requirement is addressed by quality assurance and control procedures. This table would serve as a roadmap allowing NIOSH to efficiently evaluate the adequacy of the quality assurance program and would also reduce the time required of the applicant to guide NIOSH through quality assurance reviews during the application review and audits. NIOSH will include an example of such a cross-referencing table in the Standard Application Procedure to illustrate the degree of specificity sought.

Paragraph (h) and (i) are revised but not substantially changed.

Paragraph (j) would direct manufacturers to the information specified in the Standard Application Procedure, which provides instructions at a more detailed level than is appropriate for regulation and provides administrative information subject to periodic clarification and updating. As discussed above, the Standard Application Procedure is available on the NIOSH Web page at *http://www.cdc.gov/niosh/npptl/resources/certpgmspt/default.html*.

Delivery of Respirators and Components by Applicant; Requirements (Section 84.12)

This section would be revised to direct applicants to the Standard Application Procedure for instructions on where to submit respirators and component parts for testing by NIOSH. The substantive requirements with respect to such submissions would remain without change.

Subpart D—Approval and Disapproval

Revocation of Certificates of Approval (Section 84.34)

This section, which provides NIOSH with authority to revoke certificates of approval for cause, would be revised to be consistent with the new quality assurance provisions of Subpart E by specifying that failure to maintain or cause to be maintained the quality assurance or quality control requirements of the certificate of approval would constitute a valid cause for a revocation. The existing provision is identical except that it specifies solely quality control requirements. The existing provisions of Subpart E are limited to activities termed as quality control activities, whereas the broader nomenclature of ''quality assurance'' would also be applied to the proposed new provisions of Subpart E.

Changes or Modifications of Approved Respirators; Issuance of Modification of Certificate of Approval (Section 84.35)

This section provides a procedure for applicants who seek approval from NIOSH for modifying features of an approved respirator. Paragraph (c) of the current provisions includes requirements for quality control information germane to the modifications. These provisions would be revised to also comprise the new quality assurance requirements proposed for Subpart E.

Changes in Device or Applicant Ownership (Section 84.36)

This section would specify requirements for an applicant acquiring the manufacturing rights to one or more devices (either respirators or specific respirator configurations) that has received NIOSH approval under this Part. Ownership change of NIOSH-approved devices might occur through the sale of a product line from one manufacturer to another or through a merger, buy-out, or other means of corporate acquisition or divestiture. The representative of the new owner must submit an Application for Modification of Certificate of Approval for such devices, pursuant to § 84.36, detailing the change in ownership and the impact on the approved manufacturing and quality processes documented in the respirator certification files at NIOSH. Documentation of the change in ownership status from the original applicant to whom the NIOSH certificates of approval were issued to the new owner must be included by the new owner in the application. The new owner would be required to complete such application submissions and receive a modified certificate of approval from NIOSH for each approved device prior to placing a NIOSH approval label or otherwise representing any respirators produced by the new owner as having been approved by NIOSH. Sales of an approved device that was manufactured by the original applicant prior to the change in ownership can continue after ownership of the device or the applicant has changed.

Ownership turnover in the respirator industry has increased in recent years. This has elevated the importance of ensuring that acquiring applicants provide timely notification to NIOSH of such changes, such that NIOSH can provide timely reviews to verify that required quality assurance activities and resources are maintained under the new ownership. It is in the interest of all parties, including the original applicant and the prospective new owner, to seek approvals from NIOSH as soon as possible once a change of ownership is decided, to avoid any interruption in the manufacture or sales of an approved product pending such approvals.

Changes in Manufacturing Facility or Quality System (Section 84.37)

This section would ensure that applicants obtain approval from NIOSH when they update their quality system, including updates made necessary by the addition of a new manufacturing facility. Approval by NIOSH is necessary to ensure that the quality system remains in compliance with the quality assurance provisions of Subpart E and to ensure that NIOSH has correct information for audits that it conducts pursuant to Subpart E.

Delivery of Changed or Modified Approved Respirator (Section 84.38)

This section authorizes NIOSH to obtain from the applicant, for inspection and retention, a unit of a respirator whose modification had been approved by NIOSH and is being commercially produced. The proposed revision is non-substantive, redesignating the section and replacing the specification of the ''Certification and Quality Assurance Branch'' with ''NIOSH''.

Subpart E—Quality System

Quality System, General Requirements (Section 84.40)

Paragraph (a) of this section would require that each applicant be compliant with the ISO standard for Quality Management Systems [4], which is an international consensus standard widely adopted by leading manufacturers in many industries. All respirator manufacturers holding or seeking a NIOSH approval would have to be compliant with this standard. The standard includes requirements for the following elements of a quality management system:

a. *Quality Policy and Management Responsibility* (management's stated commitment to the development and implementation of the quality management system and its continual improvement and related responsibilities, authorities, and communications)

b. *Organization* (clear assignment of a structure by which management of quality is overseen and implemented)

[4] ISO Q9001:2000 is the International Standard: *Quality management systems—Requirements*, 3rd edition, approved on December 15, 2000, and available from the International Organization for Standardization (ISO) and the American National Standards Institute (ANSI).

c. *Quality Program Documents* (a system governing the creation, control, and maintenance of documents related to quality management)

d. *Resource Management* (a framework for ensuring that physical and human resources required to implement the management of quality are identified and provided)

e. *Customer-related Processes* (procedures to identify and address customer requirements and ensure customer satisfaction)

f. *Design Assurance* (a framework for ensuring that design work involves appropriate planning, controls, inputs, outputs, review processes, and validation of results)

g. *Purchases and Subcontracts* (requirements for ensuring that purchased products conform to specified requirements)

h. *Production and Servicing* (requirements for the control and validation of these processes and for related policies)

i. *Control of Monitoring and Measuring* (requirements and processes for monitoring to assure product conformity with quality specifications, including internal and external audits)

j. *Control of Nonconforming Products* (procedures for the identification and processing of nonconforming products)

k. *Corrective Actions and Improvement* (procedures for identifying, evaluating, and implementing corrective actions to ensure product conformity with requirements and for continually improving the quality management system)

Incorporation of the ISO standard would elaborate the related existing Part 84 quality control requirements substantially. These existing requirements are general, except for the requirements governing the use of product inspection sampling plans.

As discussed under section II–C of this preamble, requiring ISO compliance by all respirator manufacturers would foster better quality management overall without substantial involvement of NIOSH and would promote a higher and more consistent level of quality in this critical safety product market. As manufacturers increasingly become ISO registered, this will also improve the efficiency and coverage of NIOSH manufacturing facility audits. To the extent that ISO registrars are effective in addressing generic quality management issues, NIOSH auditors will be able to focus their efforts on the most technical factors in quality management for assuring the supply of high quality respirators, especially the design and implementation of effective product inspection sampling plans. This increased technical focus would allow NIOSH, over time, to extend the scope of the audit program to achieve more timely audits of manufacturing facilities and coverage of more products.

Subsection (b) of this section would authorize NIOSH to conduct an audit of an applicant who is registered as compliant with the ISO standard or claims to be compliant, to assess or reassess the compliance of the applicant.

The purpose of the NIOSH audit would be to evaluate compliance with the ISO standard as it applies to the requirements of this Part. Such audits would be conducted only when NIOSH has reason to seek assurance of the adequacy of the basis of an applicant's ISO registration or statement of compliance. Past evaluations by NIOSH of ISO-registered manufacturer's quality plans have indicated to NIOSH that some ISO audits have not provided an adequate basis for the resulting ISO registrations.

Subsection (c) of this section would require each applicant and approval holder to submit to NIOSH documentation of compliance with the ISO standard. The applicant can provide either a copy of registration under the ISO standard (or any update to the standard), if the applicant is registered as compliant, or a statement of compliance if the applicant has not undergone an audit for such compliance by an ISO registrar.

Quality Manual Requirements (Section 84.41)

This section would require applicants to submit to NIOSH a copy of their quality manual, which should meet the specifications of the ISO standard and should address all quality assurance elements specified in the Standard Application Procedure. The applicant would submit a copy of the manual with each initial application for approval of a product and upon substantial revisions of the manual or, at minimum, once every four years, and upon a request by NIOSH.

The quality manual is a critical source of information by which NIOSH evaluates the adequacy of the applicant's quality management system. It documents the structure, resources, and policies of the quality management system.

Quality Control Plan Content (Section 84.42)

The current § 84.41 of Part 84 specifies elements that must be established in the applicant's quality control plan, which documents all manufacture, assembly, inspection, testing, and servicing processes applicable to the respirator submitted to NIOSH for approval. The section would be redesignated § 84.42 and revised to eliminate redundancy with information covered in the quality manual (e.g., information on organizational structure), to clarify and generalize the required elements, and to distinguish clearly between those elements that must be submitted to NIOSH and those that must be made available upon request to NIOSH. NIOSH has retained the framework used to classify nonconformances (termed ''defects'' under the current provisions of this section) according to their potential effect with respect to the safety of the user and the usability and performance of the respirator. Most important to this revision, NIOSH would replace the current product inspection sampling requirements of the quality control plan with quality assessment requirements appropriate to the variety of present day quality management approaches and appropriate to a consumer-oriented statistical weighting of ''producer and consumer risks,'' as explained further below.

The proposed quality assessment requirements reflect the range of possible quality management approaches, from the use of more intensive inspection regimens, appropriate when processes are not highly controlled or the degree of control is unknown (paragraph (a)(5)(i) of this section), to the use of statistical process control for highly controlled production processes (paragraph (a)(5)(iii) of this section). The flexibility in sampling plans proposed would progressively reward manufacturers who can achieve high levels of quality management performance by allowing increasing economy in their product quality inspection time and effort.

The three sampling plans specified in this section are statistically equivalent and are moderately more stringent than the current requirements of this section. The sampling requirements under the current § 84.41 were designed to limit producer risk, which is the statistical ''risk'' or probability that the manufacturer would erroneously reject a conforming product as nonconforming. The proposed new sampling requirements would shift the emphasis to limiting consumer risk, the latter being the statistical probability that the manufacturer would fail to reject a nonconforming product. This shift in emphasis results in a greater likelihood that non-conforming products will be identified and rejected by the manufacturer. A more technical analysis

of the proposed sampling plans, their statistical equivalence, and a comparison with the sampling plans covered by the existing requirements of § 84.41, is available from the NIOSH Web page at *http://www.cdc.gov/niosh/npptl/resources/certpgmspt/default.html.*

Paragraph (a)(5)(iv) would allow applicants to devise, with NIOSH approval, alternative sampling plans that are statistically equivalent to those specified in this section. Under paragraph (a)(6), applicants would also be allowed to continue to use the inspection plan under which their respirator was approved by NIOSH prior to the effective date of the final rule, with the exception that a more stringent performance requirement would be applied to ''Major A'' nonconformances. NIOSH has proposed a three-year grandfather period for this provision, after which all quality assurance plans would have to comply with the proposed new requirements. Finally, paragraph (a)(7) would continue to allow applicants to use other sampling plans they might devise, with NIOSH approval, for destructive inspection or test sampling.

Proposed Quality Control Plans; Approval by NIOSH (Section 84.43)

This section, currently designated as § 84.42 in Part 84, authorizes NIOSH to review, require modifications, and approve the applicant's quality control plans; requires the applicant to comply with the plans; and makes such compliance a condition of approval. This section further authorizes NIOSH to revoke approvals of the applicant as a consequence of noncompliance. Paragraph (c) would be revised to clarify the possible response by NIOSH to a case of noncompliance and paragraph (d) would be added to provide a procedure for applicants to revise and obtain NIOSH approval of revised quality control plans as necessary.

Respiratory Device Complaints (Section 84.44)

This section would elaborate the requirements of the ISO standard for Quality Management Systems to govern the applicants' management of complaints they receive concerning their NIOSH-approved respirators. Paragraphs (a)(3)(A) and (B) would impose on applicants special requirements for timeliness of response and for the timely reporting of complaints of a particularly serious nature that potentially involve health endangerment. The requirement for reporting of these cases would enable NIOSH to monitor and facilitate investigations of safety and health importance and to involve NIOSH and other federal resources in efforts to notify respirator users and take other actions necessary to remediate an identified hazardous condition involving a NIOSH-approved respirator.

Audit Programs (Section 84.45)

This section would replace and elaborate current provisions of § 84.43 under Part 84, which authorize NIOSH to inspect and evaluate the quality control program of an applicant and, if necessary, to revoke for cause an approval on the basis of such evaluation. Under these current provisions, NIOSH presently conducts audits of manufacturing facilities and of manufactured products, as discussed in section II.C. of this preamble. The proposed new subsection § 84.45(a) largely reflects the current practices of these NIOSH audit programs. The purpose of the audits is to provide assurance of the safety, performance, functionality, and reliability of approved respirators that have been produced.

Paragraph (a)(1)(i) would require the applicant to provide to the NIOSH representative conducting a facility audit, upon request, any documents or records germane to the auditing of facilities or products as provided for under this section.

Paragraph (a)(1)(ii) would limit the frequency of NIOSH facility audits, except for cause, to balance the need for such evaluation against the burden to applicants of hosting such audits and responding to the related informational requests.

Paragraph (a)(2)(i) would require an applicant to provide NIOSH-approved respirator or respirator component samples as necessary during the facility or product audit and would specify the timeliness with which such samples must be provided. Evaluation of these products is an essential, existing element of NIOSH audits. The paragraph would also allow for alternative schedules for the provision of such samples, as provided for by other sections of Part 84 that cover requirements for specific types of respirators.

The proposed new subsection § 84.45(b) would require applicants to conduct an annual quality control audit on each approved respirator or respirator family (set of respirators assembled using a subset of common components) for which the respirator or respirator family is not manufactured and sold as a complete device. Some applicants sell certain respirators unassembled and sell respirator components separately. The requirement that applicants annually audit such respirators or families of respirators is important to ensure that the components continue to assemble to produce an effective respirator as approved under NIOSH certification testing. Presently, such assembly and evaluation is required only once, at the time the applicant submits the respirator for approval by NIOSH. It is possible, however, that over time, changes in manufacturing materials and processes could affect the compatibility of components and the performance of the completely assembled respirator. NIOSH has observed such circumstances through NIOSH product audits. This required annual quality control audit would ensure that the quality assurance programs of applicants that produce such respirators periodically address this quality factor.

Quality System Records Retention (Section 84.46)

This section would complement the ISO standard for Quality Management Systems, which covers recordkeeping practices for records providing evidence of conformity to requirements and of the effective operation of the quality management system. The section would further specify that the applicant retain such quality management system records relevant to the manufacture of NIOSH-approved respirators for a period that is at least as long as the expected life of the respirator's major components and for a minimum of two years.

Some NIOSH evaluations of respirator problems have been stymied because of the lack of appropriate recordkeeping or accessibility. The proposed specifications for records retention will ensure that relevant records are available for NIOSH audits and for evaluation in case potential problems are identified through complaints to either the applicant or directly to NIOSH. Ensuring the availability of these records is essential for NIOSH to determine the cause and extent of a problem and will assist the applicant in rectifying problems identified.

IV. Regulatory Assessment Requirements

A. Executive Order 12866

Under Executive Order 12866 (58 FR 51735, October 4, 1993), the Agency must determine whether a regulatory action is ''significant'' and therefore subject to review by the Office of Management and Budget (OMB) and the requirements of the executive order. Under section 3(f), the order defines a

''significant regulatory action'' as an action that is likely to result in a rule (1) Having an annual effect on the economy of $100 million or more, or adversely and materially affecting a sector of the economy, productivity, competition, jobs, the environment, public health or safety, or state, local, or tribal governments or communities (also referred to as ''economically significant''); (2) creating serious inconsistency or otherwise interfering with an action taken or planned by another agency; (3) materially altering the budgetary impacts of entitlements, grants, user fees, or loan programs or the rights and obligations of recipients thereof; or (4) raising novel legal or policy issues arising out of legal mandates, the President's priorities, or the principles set forth in this executive order.

This proposed rule is not being treated as a ''significant regulatory action'' within the meaning of the executive order. The proposed rule is not considered economically significant, as defined in section 3(f)(1) of the executive order and does not raise novel policy issues or have any of the other effects specified in sections 3(f)(2)–(4).

For the leading U.S. respirator manufacturers who obtain approvals from NIOSH, the most substantial elements of the proposed new requirements are already standard practice. Approximately three-quarters of these manufacturers are already registered as compliant with the ISO Q9001–2000 standard and virtually all of the manufacturers with NIOSH approvals appear to be complying already with the most essential requirements of the ISO standard, according to NIOSH quality assurance audits conducted in recent years. Substantial additional quality improvement costs are unlikely to be incurred by any NIOSH approval holders. NIOSH expects this rule will allow some respirator manufacturers to achieve quality control cost savings, as discussed below.

The new sampling plan performance requirements proposed in § 84.42(a)(5) will be the most important change for respirator manufacturers, particularly to those manufacturers with either the least or most stringent quality management systems. The proposal would require respirator manufacturers that have not developed stringent quality control of their production processes to either tighten the quality performance of their production processes or to increase their quality control inspection regimen. These changes would enable such manufacturers to provide greater assurance of the performance of their products by reducing the level of consumer risk currently allowed under existing quality control plan requirements of Subpart E, as explained under section III of this preamble. On the other hand, manufacturers who already operate stringent quality management systems would be able to reduce their inspection regimen substantially under the proposed new requirements, since the current regulations, which are more than three decades old, require all respirator manufacturers to continue a system of inspections appropriate to much lower levels of process control than is achieved by some manufacturers today. Hence, high-performing respirator manufacturers are likely to be conducting redundant product quality inspections, maintaining compliance with current regulatory requirements but achieving little benefit in terms of quality assurance.

NIOSH would welcome information from respirator manufacturers on costs and cost savings that might be associated with compliance with proposed new sampling plan requirements. NIOSH recognizes that manufacturers who are not already achieving compliance with the performance requirements associated with the proposed sampling plan options would have difficulty estimating costs and cost savings associated with implementing more stringent process controls. However, if such a manufacturer planned to simply increase its inspection regimen, which is an option under the proposed requirements, the manufacturer could estimate the costs of an increased rate of product inspections and perhaps also estimate the potential cost savings of avoided product recalls. On the other hand, manufacturers that are already achieving the proposed performance requirements might be able to provide insight into other potential effects of this rule, particularly if they have retained documentation of relevant quality improvement costs and the resulting quality performance improvements. Cost savings related to the latter that might be documented include reduced inspection costs resulting from well controlled production processes; reduced losses associated with nonconforming materials, components, and final assembled products; and reduced losses associated with product recalls. At minimum, for companies that have well controlled production processes, it should be relatively straightforward to estimate the cost savings associated with eliminating redundant inspections presently conducted to maintain compliance with the current, outdated sampling plan requirements.

The proposed rule would not interfere with State, local, and tribal governments in the exercise of their governmental functions.

B. Regulatory Flexibility Act

The Regulatory Flexibility Act (RFA), 5 U.S.C. 601 *et seq.*, requires each agency to consider the potential impact of its regulations on small entities, including small businesses, small governmental units, and small not-for-profit organizations. The Department of Health and Human Services (''HHS'') certifies that this proposed rule would not have a significant economic impact on a substantial number of small entities within the meaning of the RFA.

The majority of respirator manufacturers are small businesses as defined under the Small Business Act (Pub. L. 85–536) for this industry sector (NAICS 339112—Medical Instruments and Equipment Manufacturers), employing fewer than 500 employees. For these manufacturers, the proposed rule would establish new quality assurance requirements applicable to respirators approved by NIOSH for use in potentially hazardous work atmospheres of every type, including toxic gases; radiological, toxic, obstructive, and carcinogenic dusts; oxygen deficient atmospheres; and biological aerosols. Workers don these respirators for their protection in a wide variety of goods production industrial sectors, such as mining, manufacturing, construction, and agriculture. NIOSH-approved respirators are also worn by workers in service sectors, such as firefighters and other emergency responders in public safety, maintenance workers in public utilities, and nursing and medical staff exposed to pharmaceutical and biological aerosols in health care.

The new quality assurance requirements would replace requirements that are considerably less specific in part, and where specific, are out-of-date with typical quality control and assurance practices of today's respirator manufacturing industry. As discussed under section IV.A of this preamble, most of the respirator manufacturers that seek and maintain approvals from NIOSH are essentially in compliance already with most or all of the proposed new requirements. The requirements most likely to require changes in the quality assurance practices of some of these manufacturers are the new set of options for quality control sampling plans and their

associated performance requirements, which provide a higher level of consumer protection than those they replace, by reducing ''consumer risk,'' as discussed under section III of this preamble. As discussed under section IV.A, manufacturers who are not currently achieving a sufficient degree of process control for critical characteristics of the respirators they produce would have to either increase the intensity of the product inspections or improve their production process controls. On the other hand, manufacturers with high degrees of process control will not have to make any changes in quality control practices and furthermore will be able to eliminate redundant product inspections required under the current, out-of-date regulations.

NIOSH does not have access to information to estimate costs and cost savings associated with changes some manufacturers might make in response to the proposed sampling plan requirements. NIOSH is soliciting information from the manufacturers that might be useful in establishing such an estimate, but NIOSH expects that any companies that would be required to make changes would have difficulty estimating *ex ante* the potential economic impact of the changes.

There are substantial difficulties in making such estimates for a company that lacks well-controlled production processes: First, the causes of quality problems must be identified; and second, once such cause or causes are identified, there are likely to be multiple alternatives for solving the problems identified. On the other hand, such a company would be in a position to estimate some of the possible cost savings associated with quality improvements, such as (1) reduced inspection costs; (2) avoided losses associated with nonconforming materials, components, and final assembled products; and (3) reduced losses associated with product recalls. As discussed in section IV.A of this preamble, most respirator manufacturers who obtain approvals from NIOSH operate quality assurance systems in line with current quality management practices and are likely to have the records needed for an analysis of potential cost savings.

For the reasons provided, a regulatory flexibility analysis, as provided for under RFA, is not required.

C. What Are the Paperwork and Other Information Collection Requirements (Subject to the Paperwork Reduction Act) Imposed Under This Rule?

The Paperwork Reduction Act is applicable to the data collection aspects of this rule. Under the Paperwork Reduction Act of 1995, a Federal agency shall not conduct or sponsor a collection of information from ten or more persons other than Federal employees unless the agency has submitted a Standard Form 83, Clearance Request, and Notice of Action, to the Director of OMB, and the Director has approved the proposed collection of information. A person is not required to respond to a collection of information unless it displays a currently valid OMB control number.

NIOSH has obtained approval from OMB to collect the information that NIOSH would collect from respirator manufacturers under this rule under OMB Control No. 0920–109 (Respiratory Protective Devices), which covers all information collection under 42 CFR part 84. The information NIOSH would collect under this rule does not differ substantially from the information presently collected by NIOSH from respirator manufacturers who obtain NIOSH certification of their products.

D. Small Business Regulatory Enforcement Fairness Act

As required by Congress under the Small Business Regulatory Enforcement Fairness Act of 1996 (5 U.S.C. 801 *et seq.*), HHS would report to Congress the promulgation of a final rule, once it is developed, prior to its taking effect. The report would state that HHS has concluded that the rule is not a ''major rule'' because it is not likely to result in an annual effect on the economy of $100 million or more.

E. Unfunded Mandates Reform Act of 1995

Title II of the Unfunded Mandates Reform Act of 1995 (2 U.S.C. 1531 *et seq.*) directs agencies to assess the effects of federal regulatory actions on state, local, and tribal governments, and the private sector ''other than to the extent that such regulations incorporate requirements specifically set forth in law.'' For purposes of the Unfunded Mandates Reform Act, this proposed rule does not include any federal mandate that may result in increased annual expenditures in excess of $100 million by state, local or tribal governments in the aggregate, or by the private sector.

F. Executive Order 12988 (Civil Justice)

This proposed rule has been drafted and reviewed in accordance with Executive Order 12988, Civil Justice Reform and will not unduly burden the federal court system. NIOSH has provided quality assurance requirements it would apply uniformly to all applications from manufacturers of respirators. This proposed rule has been reviewed carefully to eliminate drafting errors and ambiguities.

G. Executive Order 13132 (Federalism)

HHS has reviewed this proposed rule in accordance with Executive Order 13132 regarding federalism, and has determined that it does not have ''federalism implications.'' The proposed rule does not ''have substantial direct effects on the States, on the relationship between the national government and the States, or on the distribution of power and responsibilities among the various levels of government.''

H. Executive Order 13045 (Protection of Children From Environmental Health Risks and Safety Risks)

In accordance with Executive Order 13045, HHS has evaluated the environmental health and safety effects of this proposed rule on children. HHS has determined that the proposed rule would have no effect on children.

I. Executive Order 13211 (Actions Concerning Regulations That Significantly Affect Energy Supply, Distribution, or Use)

In accordance with Executive Order 13211, HHS has evaluated the effects of this proposed rule on energy supply, distribution, or use because it applies to the underground coal mining sector since coal mine operators are consumers of respirators. The proposed rule is unlikely to affect the cost of respirators used in coal mines and hence is not likely to have ''a significant adverse effect on the supply, distribution, or use of energy.'' Accordingly, this proposed rule does not constitute a ''significant energy action'' Under E.O. 13211 and requires no further Agency action or analysis.

List of Subjects in 42 CFR Part 84

Incorporation by reference, Mine safety and health, Occupational safety and health, Personal protective equipment, Respirators.

Text of the Rule

For the reasons discussed in the preamble, the Department of Health and Human Services proposes to amend 42 CFR Part 84 as follows:

PART 84—APPROVAL OF RESPIRATORY PROTECTIVE DEVICES [AMENDED]

1. The authority citation for Part 84 continues to read as follows:

Authority: 29 U.S.C. § 651 *et seq.*, and 657(g); 30 U.S.C. 3, 5, 7, 811, 842(h), 844.

Subpart A—General Provisions

3. Amend § 84.2 by:

A. Revising paragraph (a),

B. Removing paragraph (e),

C. Redesignating paragraphs (d), (f) through (u), (v) through (w), (x) through (z), (aa) through (bb), and (cc) as paragraphs (e), (g) through (v), (x) through (y), (bb) through (dd), (hh) through (ii), and (kk),

D. Adding new paragraphs (d), (f), (w), (z), and (aa), and adding paragraphs (ee) through (gg) and (jj) to read as follows:

§ 84.2 Definitions.

As used in this part—

(a) *Applicant* means an individual, partnership, company, corporation, association, or other organization that designs, manufactures, assembles, or controls the assembly of a respirator and who seeks to obtain a certificate of approval for such respirator or who holds such an approval issued by NIOSH.

* * * * *

(d) *Authorized NIOSH Representative* means an employee of NIOSH, a NIOSH contractor, or an employee of a NIOSH contractor acting on behalf of NIOSH.

* * * * *

(f) *Certified Equipment List* means a list of approved respirators maintained and published by NIOSH.

* * * * *

(w) *Manufacturing facility* means the building(s) where a respirator is manufactured or assembled, including any building used to manufacture or assemble the respirator that is operated by any supplier whose quality system is a component of the applicant's quality system.

* * * * *

(z) *NIOSH* means the National Institute for Occupational Safety and Health, Centers for Disease Control and Prevention, U.S. Department of Health and Human Services.

(aa) Nonconformance means a failure to meet a requirement of this Part or of an approval under this part.

* * * * *

(ee) *Quality Assurance* means the set of planned and systematic actions necessary to provide a high degree of confidence that a respirator will satisfy all design, quality, fitness-for-use, and performance requirements.

(ff) *Quality Control* means the operational activities, processes, and techniques used to provide a high degree of confidence that individual units of an approved respirator that are produced will meet all safety, performance, and regulatory requirements.

(gg) *Quality System* means the entire organizational structure, responsibilities, procedures, specifications, processes, and resources used or required for quality assurance and control.

* * * * *

(jj) *Standard Application Procedure* means the detailed instructions provided by NIOSH on its Web page (*http://www.cdc.gov/niosh/npptl/resources/certpgmspt/default.html*) for applicants requesting an approval, or modification of approval, for a device under this part.

Subpart B—Application for Approval

4. Amend § 84.10 by:

A. Removing paragraph (b),

B. Redesignating paragraphs (c) through (e) as (d) through (f),

C. Adding new paragraphs (b) and (c), and

D. Revising paragraphs (d) and (e), to read as follows:

§ 84.10 Application procedures.

* * * * *

(b) Applications may be submitted to NIOSH following the instructions provided in the Standard Application Procedure on the NIOSH Web page at *http://www.cdc.gov/niosh/npptl/resources/certpgmspt/default.html.*

(c) NIOSH reserves the right to suspend the processing of applications of any applicant who NIOSH has found to be noncompliant with any provisions of Subpart E. This suspension of processing shall remain in effect until such time as NIOSH finds that the applicant is complying with such provisions.

(d) Except as provided in § 84.64, the examination, inspection, and testing of all respirators and the auditing of manufacturer facilities shall be conducted by NIOSH or an authorized NIOSH representative.

(e) Applicants, manufacturers, or their representatives may visit or communicate with NIOSH to discuss the requirements for approval of any respirator or the proposed designs thereof. NIOSH shall not charge for such consultation nor issue any written report to applicants, manufacturers, or their representatives as a result of such consultation.

* * * * *

5. Revise § 84.11 to read as follows:

§ 84.11 Contents of application.

Each application shall include the following elements:

(a) A complete written description of the respirator for which approval is requested;

(b) Drawings or specifications that depict or describe the respirator assembly and all of it major components, including accessories;

(c) User instructions;

(d) Evidence of compliance with or current registration under ISO Q9001:2000 [5] for the quality system under which the respirator will be manufactured, as specified in Subpart E of this part.

(e) A copy of the current quality manual, as specified in Subpart E of this part.

(f) A quality control plan flowchart, as specified in Subpart E of this part.

(g) A table that lists each section and paragraph of this Part with which the respirator complies and that cross-references the stage or stages in the manufacturing process during which compliance with the listed section or paragraph is evaluated through quality assurance or control procedures.

(h) A statement that the respirator has been pre-tested by the applicant as specified in § 84.64 and documentation of the results of such tests;

(i) A statement that the respirator and component parts submitted for approval are not prototypes and were made using regular production tooling, with no operation included that will not be incorporated in regular production processing; and

(j) Applicants may obtain detailed guidance specified in the Standard Application Procedure on the NIOSH Web page at *http://www.cdc.gov/niosh/npptl/resources/certpgmspt/default.html.* (The information collections contained in this section are approved under OMB control number 0920–0109.)

6. Amend § 84.12 by revising paragraph (b) to read as follows:

§ 84.12 Delivery of respirators and components by applicant; requirements.

* * * * *

(b) The applicant shall deliver, at his own expense, the number of completely assembled respirators and component parts required for testing, to the location

[5] ISO Q9001:2000, the International Standard: *Quality management systems—Requirements,* 3rd edition. This standard is incorporated by reference under § 84.40(a) of this Part.

designated in the Standard Application Procedure on the NIOSH Web page at *http://www.cdc.gov/niosh/npptl/resources/certpgmspt/default.html.*

* * * * *

Subpart D—Approval and Disapproval

8. Revise § 84.34 to read as follows:

§ 84.34 Revocation of certificates of approval.

NIOSH reserves the right to revoke, for cause, any certificate of approval issued pursuant to the provisions of this part. Such causes include, but are not limited to, misuse of approval labels and markings, misleading advertising, or failure to maintain or cause to be maintained the quality assurance or quality control requirements of the certificate of approval.

9. Amend § 84.35 to revise paragraph (c) to read as follows:

§ 84.35 Changes or modifications of approved respirators; issuance of modification of certificate of approval.

* * * * *

(c) The application shall be accompanied by appropriate drawing(s) and by a proposed quality control plan and quality assurance provisions that meet the requirements of Subpart E of this part.

* * * * *

§ 84.36 [Redesignated as § 84.38]

10. Redesignate § 84.36 as § 84.38.

11. Add a new § 84.36 to read as follows:

§ 84.36 Changes in device or applicant ownership.

(a) When there is a change in either the ownership of the manufacturing rights to a device approved by NIOSH under this Part or the ownership of an applicant that holds a NIOSH approval for one or more devices under this Part, as might occur through the sale of a product line from one manufacturer to another or through a merger, buy-out, or other means of corporate acquisition or divestiture, the new owner acquiring the rights to the manufacture of the device or acquiring the applicant that holds the approval for the device shall submit an Application for Modification of Certificate of Approval for each approved device, pursuant to the requirements of § 84.35. The new owner making or having made such an acquisition shall complete the application submissions and must receive a modified certificate of approval from NIOSH for each device prior to any continued manufacture of the device after ownership of the device or applicant is changed.

(b) The new owner making or having made an acquisition as described under paragraph (a) of this section shall submit to NIOSH documentation of the resulting change in ownership with the Application for Modification of a Certificate of Approval.

(c) Units of an approved device manufactured by an applicant prior to a change in ownership, as described in paragraph (a) of this section, may continue to be sold as NIOSH-approved devices following the change in ownership.

(d) The failure by an owner that has made an acquisition, as described in paragraph (a) of this section, to obtain approval from NIOSH prior to the continued manufacture of a related NIOSH-approved device, may be deemed as sufficient cause for revocation of the relevant approval(s).

11. Add a new § 84.37 to read as follows:

§ 84.37 Changes in manufacturing facility or quality system.

(a) The applicant shall notify NIOSH in writing, within 20 work days, of a final decision to change the location of a manufacturing facility or of a final decision to make any substantive change in the quality system associated with one or more approved devices. Failure to notify NIOSH within this deadline may be deemed cause for revocation of the relevant approval(s).

(b) Prior to implementing a change specified under paragraph (a) of this section, the applicant shall submit to NIOSH for approval a revised quality manual, revised quality control plans, and revisions of any other materials and information previously submitted to NIOSH under Subpart E of this part that require revision to incorporate the reported change. Failure to obtain such approval from NIOSH prior to implementing the change or changes may be deemed cause for revocation of the relevant approval(s).

12. Revise newly designated § 84.38 to read as follows:

§ 84.38 Delivery of changed or modified approved respirator.

Upon request, the applicant shall deliver to NIOSH, as soon as it is commercially produced, one unit of an approved respirator for which NIOSH has issued a formal certificate of modification. The unit must include all required markings and be provided in its customary commercial container.

13. Revise Subpart E to read as follows:

Sec.

Subpart E—Quality System

84.40 Quality system, general requirements.
84.41 Quality manual requirements.
84.42 Quality control plan content.
84.43 Proposed quality control plans; approval by NIOSH.
84.44 Respiratory device complaints.
84.45 Audit programs.
84.46 Quality system records retention.

Subpart E—Quality System

§ 84.40 Quality system, general requirements.

The applicant shall be responsible for the establishment, execution, and maintenance of a quality system that ensures that devices produced under the applicant's certificate of approval meet the specifications to which they are certified under this Part and are reliable, safe, effective, and otherwise fit for their intended uses.

(a) To request and to maintain an approval under this Part, the applicant shall establish and maintain a quality system that is compliant with the International Organization for Standardization (ISO) Q9001:2000 standard: *Quality management systems—Requirements,* 3rd edition, approved on December 15, 2000. ISO Q9001:2000 is incorporated by reference into this section and has been approved by the Director of the Federal Register in accordance with 5 U.S.C. 552(a) and 1 CFR Part 51. A copy is available for inspection at the National Archives and Records Administration (NARA). For information on the availability of this material at NARA, call 202–741–6030 or go to *http://www.archives.gov/federal_register/code_of_federal_regulations/ibr_locations.html.* A copy is also available for inspection at NIOSH, National Personal Protection Technology Laboratory, Bruceton Research Center, 626 Cochrans Mill Road, Pittsburgh, PA 15236. To arrange for an inspection at NIOSH, call 412–386–6593. Copies of the standard are also available for purchase from the American National Standards Institute, 25 West 43rd St., New York, NY 10036; Web page: *http://www.ansi.org;* phone 212–642–4900.

(b) If deemed necessary by NIOSH, NIOSH shall evaluate the compliance of the applicant with the ISO Q9001:2000 standard on the basis of an audit conducted by NIOSH.

(c) The applicant shall submit to NIOSH either of the following, as appropriate, to document compliance with the ISO Q9001:2000 standard:

(1) For applicants who are registered by a qualified registrar under the ISO 9001:2000 standard or any update to this ISO standard, a copy of the most recent registration; or

(2) For all other applicants, a statement self-attesting to being in compliance with the ISO 9001:2000 standard.

§ 84.41 Quality manual requirements.

(a) The applicant shall submit a copy of the current quality manual to NIOSH together with the initial application for respirator certification under § 84.11 of this part.

(b) The applicant shall also submit to NIOSH a current copy of the quality manual:

(1) Whenever it is substantially revised or, at a minimum, once every four (4) years; and

(2) Upon the request of NIOSH.

§ 84.42 Quality control plan content.

(a) The applicant shall develop a quality control plan that documents all manufacturing, assembly, inspection, testing, and servicing processes applicable to the respiratory device for which certification is sought and maintained. The quality control plan shall contain the following elements:

(1) Quality control plan flowchart. The flowchart must depict all processes used in the production of the approved device, including processes comprising manufacturing, assembly, inspection, testing, and servicing of the device and its components. All inspection and testing activities conducted throughout the entire production process must be included. The quality control plan flowchart must be submitted with each application for approval of a device submitted under § 84.11 of this Part.

(2) Design, Production, and/or Engineering Drawings and Specifications. Drawings and specifications must be accurate and sufficiently detailed to fulfill their use in procurement, manufacturing, assembly, inspection, and testing activities. Upon request by NIOSH, the applicant shall provide copies of these drawings or specifications to NIOSH or an authorized NIOSH representative for inspection and review.

(3) Assembly, Inspection, and Testing Procedures. The applicant shall design, document, and validate procedures for all assembly, inspection, and testing activities, whether procured or performed by the applicant, to ensure that sufficient process description is available to successfully perform all necessary production activities. Acceptance and rejection workmanship criteria must be incorporated into relevant procedures to assure that the approved device meets all design, performance, and regulatory requirements. Upon request by NIOSH, the applicant shall provide copies of these procedures to NIOSH or an authorized NIOSH representative.

(4) Critical to Quality Characteristics (CTQC).

(i) The applicant shall generate, maintain, and update as necessary, CTQC documents for each stage in the production process for an approved respiratory device. A CTQC document shall list all Critical, Major A, Major B, and Minor characteristics for which inspection or testing shall be performed. Upon request by NIOSH, the applicant shall provide copies of CTQC documents to NIOSH or an authorized NIOSH representative.

(ii) The applicant shall incorporate the criteria listed in a CTQC document into inspection procedures established pursuant to paragraph (a)(3) of this section at the appropriate stages of assembly. The appropriate stage of assembly for a criterion is a stage at which the criterion can be fully evaluated by the assembler without the evaluation being obstructed or otherwise limited as a result of the addition to the assembly of other hardware, components, or performance elements.

(iii) The applicant shall classify each of the CTQC of the device according to the importance of the potential effect of a nonconformance, into the following classes:

(A) Critical. A nonconformance that judgment and experience indicate is likely to result in a condition immediately hazardous to life or health for individuals using or depending upon the respirator;

(B) Major A. A nonconformance, other than critical, that is likely to result in failure to the degree that the respirator does not provide any respiratory protection, or a nonconformance that reduces protection and is not detectable by the user;

(C) Major B. A nonconformance, other than Major A or critical, that is likely to result in reduced respiratory protection and is detectable by the user; and

(D) Minor. A nonconformance that is not likely to materially reduce the usability of the respirator for its intended purpose, or a nonconformance that is a departure from established standards and has little bearing on the effective use or operation of the respirator.

(5) Incoming, In-process, and Final Inspection Sampling Plan Requirements. Incoming, in-process, and final inspection sampling shall conform to one or more of the following quality assessment sampling plans:

(i) The use of zero defect sampling plans where inspection is used. The sampling plans in Military Standard MIL–STD–1916 provide levels for verifying component acceptability for each of the CTQC:

(A) Critical characteristics shall use verification level VII;

(B) Major A characteristics shall use verification level VI;

(C) Major B characteristics shall use verification level III;

(D) Minor characteristics shall use verification level II.[6]

(ii) The use of sampling plans based on consumer risk. The sampling plans in ANSI/American Society for Quality Control[7] Standard Q3–1988 provide levels of component acceptability for each product characteristic:

(A) Critical characteristics shall use a Limiting Quality (LQ) of 0.50;

(B) Major A characteristics shall use a Limiting Quality (LQ) of 0.80;

(C) Major B characteristics shall use a Limiting Quality (LQ) of 2.00;

(D) Minor characteristics shall use a Limiting Quality (LQ) of 3.15.

(iii) The use of statistical process control to determine product quality. Process capability indices (Cpk) and statistical control processes must meet or exceed the following process characteristics:

(A) Critical characteristics shall have a Cpk > 2.00;

(B) Major A characteristics shall have a Cpk > 1.33;

(C) Major B characteristics shall have a Cpk > 1.33;

(D) Minor characteristics shall have a Cpk > 1.00.

Under this paragraph, upon approval of the quality assessment plan by NIOSH, the applicant may reduce or eliminate inspection sampling when the plan criteria are met or exceeded.[8]

(iv) The applicant also may use a sampling plan not specified under this section if NIOSH finds the proposed plan to be statistically equivalent to the plans described in paragraphs (a)(5)(i) through (iii) of this section.

(6) Sampling plan grandfather period. The following provisions apply to any sampling plan in effect at the time this rule becomes effective:

(i) Applicants may continue to use the Acceptable Quality Level (AQL) inspection plan under which a device was approved by NIOSH prior to the

[6] Refer to Department of Defense Handbook MIL–HDBK–1916, *Companion Document to Mil-Std-1916*, Notice 1, 20 April 2004, Section 8, pp. 37–42 for relevant guidance and details on the sampling plans.

[7] Renamed American Society for Quality.

[8] Refer to Department of Defense Handbook MIL–HDBK–1916, *Companion Document to Mil-Std-1916,* Notice 1, 20 April 2004, Section 5, pp. 11–30, for definitions of Cpk and for guidance on statistical process control.

effective date of this provision for up to three years from the effective date of this revision. After such time, applicants shall employ only the quality assessment sampling plans approved under paragraphs (a)(5)(i) through (iv) of this section in the manufacture of devices approved under this Part.

(ii) For any AQL inspection plan in use, the levels of component acceptability are as follows:

(A) Critical characteristics shall be inspected 100 percent;

(B) Major A characteristics shall have an acceptable quality level of 0.65 percent;

(C) Major B characteristics shall have an acceptable quality level of 2.50 percent;

(D) Minor characteristics shall have an acceptable quality level of 4.00 percent.

(7) Destructive inspection or test sampling. The applicant may also use a sampling plan not specified under paragraphs (a)(5)(i) through (iv) of this section for destructive inspection or test sampling. Such sampling plans must be approved by NIOSH.

(8) If attribute sampling plans are used and characteristics are recorded as pass/fail, when failures occur, the applicant shall record the failed characteristic's actual value.

(9) All necessary sampling plan documents shall be available for use at the location of the assembly, inspection, or testing activities.

(b) NIOSH reserves the right to request additional documentation as necessary.

(c) The applicant's document control system required by section 4.2.3 of the ISO Q9001:2000 standard shall include the control of all drawings, plans, and other documents required in this section.

§ 84.43 Proposed quality control plans; approval by NIOSH.

(a) Each proposed quality control plan submitted in accordance with this subpart shall be reviewed by NIOSH to determine its adequacy for ensuring the quality of respiratory protection provided by the respirator for which an approval is sought.

(b) If NIOSH determines that the proposed quality control plan submitted by the applicant will not ensure adequate quality control, NIOSH shall require the applicant to modify the procedures and/or testing requirements of the plan prior to acceptance of the plan and issuance of any certificate of approval.

(c) NIOSH shall incorporate approved quality control plans of the applicant into each certificate of approval issued to the applicant. The applicant shall comply with such plans. NIOSH may deem noncompliance with such plans as cause to revoke any and all relevant certificates of approval of the applicant, as provided under § 84.34 of this part.

(d) Applicants may submit to NIOSH revisions to approved quality control plans as necessary. NIOSH shall review, consider the approval, and incorporate such plans into an applicant's relevant certificates of approval as provided under paragraphs (a) through (c) of this section.

§ 84.44 Respiratory device complaints.

(a) Each applicant shall establish and maintain procedures for receiving, reviewing, evaluating, and resolving complaints related to the safety, quality, or performance of an approved device. Such procedures shall require that:

(1) Complaints, whether written or oral, are documented, reviewed, evaluated, investigated as necessary, and resolved.

(2) When a complaint is not investigated, the applicant shall maintain a record that specifies the reason that the complaint was not investigated and the name of the individual or individuals responsible for the decision.

(3)(A) The applicant shall immediately evaluate and investigate any complaint that:

(i) Arises from an incident involving a death, injury, near-miss, or other hazardous circumstance involving the health or safety of the user; or

(ii) Indicates a Critical, Major A, or Major B nonconformance, as classified by the applicant under § 84.42(a)(4)(iii) of this subpart.

(B) The applicant shall notify NIOSH in writing within three work days of any such complaint. The notification shall include a summary of the complaint, the current results of the investigation, and the current plans for any additional investigation and/or remedial activities. Notification shall be submitted to NIOSH by e-mail, facsimile, or in hardcopy by overnight delivery, to the addresses provided on the NIOSH Web page at *http://www.cdc.gov/niosh/npptl/resources/certpgmspt/default.html.*

§ 84.45 Audit programs.

(a) NIOSH audits.

(1) Authorized NIOSH representatives shall conduct onsite compliance audits at manufacturing facilities involved in the production of respiratory devices approved or submitted for approval under this part.

(i) During onsite compliance audits, the applicant shall make available to the NIOSH representative(s) upon request any documents or records germane to the provisions of this section (§ 84.45).

(ii) The frequency and extent of onsite compliance audits shall be determined by NIOSH. NIOSH shall not conduct such audits of a particular manufacturing facility more than once per calendar year per approved device or more than once within a six-month period, except for cause.

(2) NIOSH shall conduct product audits of the safety, quality, and performance of approved respiratory devices that have been produced.

(i) Applicants shall provide, upon request, sufficient samples of approved devices, or components thereof, as NIOSH determines necessary to conduct the audit. For onsite compliance audits, applicants shall provide such samples within 30 days of the request by NIOSH. For product audits, applicants shall provide such samples within 90 days of the request by NIOSH, or as otherwise provided under this part.

(ii) The applicant must choose audit samples randomly from the manufacturing process or the inventory of completed devices.

(iii) The applicant must provide documentation describing the procedure by which the audit samples were selected.

(3) NIOSH shall provide a final report of the audit process and results to the management representative of the applicant.

(4) NIOSH audit results that demonstrate a failure to comply with requirements of this Part may be deemed cause for revocation of a certificate of approval as provided under § 84.34 of this part.

(5) Failure to supply audit samples shall be deemed cause for revocation of a certificate of approval under § 84.34 of this part.

(b) Applicant audit program.

(1) Applicants shall conduct an annual audit on each respirator or respirator family for which the respirator or respirator family is not tested as a complete device during the manufacturing process. During such audit, the applicant shall notify NIOSH within three work days of finding any nonconformance of a critical or major characteristic, as classified by the applicant under § 84.42(a)(4)(iii) of this subpart. Reports of these audits shall be made available upon request to NIOSH and retained by the applicant for a period of three (3) years.

(The information collections contained in this section are approved under OMB control number 0920–0109)

§ 84.46 Quality system records retention.

The applicant shall establish a retention period for the records required by section 4.2.4 of the ISO Q9001:2000 standard that is at least as long as the expected service life of the respirator's major components; in no case shall the retention period be less than 24 months.

Dated: July 23, 2008.

Michael O. Leavitt,

Secretary, Department of Health and Human Services.

[FR Doc. E8–29236 Filed 12–9–08; 8:45 am]

BILLING CODE 4163–18–P

DEPARTMENT OF COMMERCE

National Oceanic and Atmospheric Administration

50 CFR Part 665

[Docket No. 0811281532–81534–01]

RIN 0648–XL64

Fisheries in the Western Pacific; Bottomfish and Seamount Groundfish Fisheries; 2008–09 Main Hawaiian Islands Bottomfish Total Allowable Catch

AGENCY: National Marine Fisheries Service (NMFS), National Oceanic and Atmospheric Administration (NOAA), Commerce.

ACTION: Proposed specifications; request for comments.

SUMMARY: NMFS proposes to establish a total allowable catch (TAC) for the 2008–09 fishing year of 241,000 lb (109,316 kg) of Deep 7 bottomfish in the main Hawaiian Islands (MHI). The TAC would be set in accordance with regulations established to support long-term sustainability of bottomfish in the Hawaiian Archipelago.

DATES: Comments must be received by December 26, 2008.

ADDRESSES: Comments on this proposed specification, identified by 0648–XL64, may be sent to either of the following addresses:

- Electronic Submission: Submit all electronic public comments via the Federal e-Rulemaking Portal *www.regulations.gov;* or
- Mail: William L. Robinson, Regional Administrator, NMFS, Pacific Islands Region (PIR), 1601 Kapiolani Blvd, Suite 1110, Honolulu, HI 96814–4700.

Instructions: All comments received are a part of the public record and will generally be posted to *www.regulations.gov* without change. All personal identifying information (e.g., name, address, etc.) submitted voluntarily by the commenter may be publicly accessible. Do not submit confidential business information, or otherwise sensitive or protected information. NMFS will accept anonymous comments (if you wish to remain anonymous, enter ''NA'' in the required name and organization fields). Attachments to electronic comments will be accepted in Microsoft Word or Excel, WordPerfect, or Adobe PDF file formats only.

Copies of the Fishery Management Plan for Bottomfish and Seamount Groundfish Fisheries of the Western Pacific Region (Bottomfish FMP) and related Environmental Impact Statement are available from the Western Pacific Fishery Management Council (Council), 1164 Bishop St., Suite 1400, Honolulu, HI 96813, tel 808–522–8220, fax 808–522–8226, or www.wpcouncil.org.

An environmental assessment (EA), including a Regulatory Impact Review (RIR), was prepared that describes the impact on the human environment that would result from this proposed action. Copies of the EA are available from *www.regulations.gov*, or William L. Robinson (see **ADDRESSES**).

FOR FURTHER INFORMATION CONTACT: Toby Wood, NMFS PIR Sustainable Fisheries, 808–944–2234.

SUPPLEMENTARY INFORMATION: This **Federal Register** document is also accessible at the Office of the Federal Register Web site *www.gpoaccess.gov/fr*.

The bottomfish fishery in Federal waters around Hawaii is managed under the Bottomfish FMP, developed by the Council and implemented by NMFS under the authority of the Magnuson-Stevens Fishery Conservation and Management Act (Magnuson-Stevens Act). Regulations governing bottomfish fishing by U.S. vessels in accordance with the Bottomfish FMP appear at 50 CFR part 665 and subpart H of 50 CFR part 600. Currently, bottomfish stocks in the Hawaiian Archipelago are not experiencing overfishing, and efforts to minimize local stock depletion in the MHI Management Subarea are precautionary. The MHI Management Subarea refers to the portion of U.S. EEZ around the Hawaiian Archipelago lying to the east of 161 20' west longitude. For all the bottomfish TACs considered in this specification, the estimated risk of overfishing in the Hawaiian Archipelago is zero.

On April 4, 2008, NMFS published a final rule (73 FR 18457) that implemented Bottomfish FMP Amendment 14. The provisions established under Amendment 14 include a non-commercial bag limit of five Deep 7 bottomfish (all species combined) per fisherman per trip. Amendment 14 also established a requirement for NMFS to set an annual TAC limit for Deep 7 bottomfish in the MHI, based on a recommendation from the Council, considering the best available scientific, commercial, and other information, and taking into account the associated risk of overfishing. The Deep 7 bottomfish are onaga (*Etelis coruscans*), ehu (*E. carbunculus*), gindai (*Pristipomoides zonatus*), kalekale (*P. sieboldii*), opakapaka (*P. filamentosus*), lehi (*Aphareus rutilans*), and hapu'upu'u (*Epinephelus quernus*).

When the TAC for the year is projected to be reached, NMFS will close the non-commercial and commercial fisheries until the end of the fishing year (August 31). During a fishery closure for Deep 7 bottomfish, no person may fish for, possess, or sell any of these fish in the MHI, except as otherwise authorized by law. Specifically, fishing for, and the resultant possession or sale of, Deep 7 bottomfish by vessels legally registered to Mau Zone, Ho omalu Zone, or Pacific Remote Island Areas bottomfish fishing permits, and conducted in compliance with all other laws and regulations, are not affected by the closure. There is no prohibition on fishing for or selling other non-Deep 7 bottomfish species throughout the year.

Last year (2007–08 fishing year), the Council recommended and NMFS implemented a Deep 7 bottomfish TAC of 178,000 lb (80,739 kg) (73 FR 18718; April 7, 2008). Monitoring of the commercial fishery indicated that the MHI bottomfish fishery harvested the TAC in April 2008. In accordance with the regulations at § 665.72, and as a result of reaching the TAC, NMFS published a temporary rule closing the non-commercial and commercial bottomfish fisheries on April 16, 2008 (73 FR 18717; April 7, 2008), and a related correction notice (73 FR 20001; April 14, 2008).

At its 142nd meeting in Honolulu in June 2008, the Council learned that new data were available for the bottomfish fishery that would be integral to the analysis performed by NMFS to update the bottomfish stock assessment. An updated stock assessment provides the best scientific basis upon which the Council can make its recommendation on a TAC, as required by regulation § 665.72(a) and Magnuson-Stevens Act National Standard 2. Because the updated bottomfish stock assessment was not available at the June 2008 meeting, the Council did not recommend a 2008–09 TAC. Instead,

based on a recommendation from the Council, NMFS delayed opening the fishery until November 15, 2008 (73 FR 50572; August 27, 2008).

An updated Hawaiian bottomfish stock assessment was available at the Council's 143rd meeting in October 2008. After consideration of the assessment, risks of overfishing, recommendations from the Council's Scientific and Statistical Committee, and input from the public, the Council recommended a TAC for the 2008–09 MHI bottomfish fishing year of 241,000 lb (109,316 kg). NMFS will consider the Council's recommendation, potential environmental and economic affects of the proposed TAC, and comments received during the public comment period for this proposed specification, and will announce the final TAC specification in the **Federal Register**.

Regardless of the final TAC specification, all other management measures will continue to apply in the MHI bottomfish fishery. The MHI bottomfish fishery re-opened on November 15, 2008, and will continue until August 31, 2009, unless the fishery is closed prior to August 31 as a result of the TAC being reached.

Classification

Pursuant to section 304(b)(1)(A) of the Magnuson-Stevens Act, the NMFS Assistant Administrator for Fisheries has determined that this proposed specification is consistent with the Bottomfish FMP, other provisions of the Magnuson Stevens Act, and other applicable laws, subject to further consideration after public comment.

An initial regulatory flexibility analysis (IRFA) was prepared, as required by section 603 of the Regulatory Flexibility Act. The IRFA describes the economic impact this proposed specification, if adopted, would have on small entities. A description of the action, why it is being considered, and the legal basis for this action are contained in the preamble to this specification. This specification does not duplicate, overlap, or conflict with other Federal rules. There are no reporting, recordkeeping, or other compliance requirements in the proposed specification. There are no disproportionate economic impacts from this specification based on home port, gear type, or relative vessel size. The analysis follows:

Description and Estimate of the Number of Small Entities to which the Specification Applies

There are approximately 380 vessels engaged in the commercial harvest of MHI bottomfish. Based on 2000–03 data, the aggregate gross receipts for these vessels were $1.47 million, with average gross receipts per vessel of $3,870 annually. However, 318 of these vessels recorded revenues of under $2,175. In general, the relative importance of MHI bottomfish to commercial participants as a percentage of overall fishing (or household) income is unknown, as the total suite of fishing (or other income-generating) activities undertaken by individual operations across the year has not been examined, to date. The majority of the 380 vessels comprising the affected universe were under 30 ft (9.1 m) in length overall. Based on all available information, NMFS has determined that all vessels in the current fishery are small entities under the Small Business Administration definition of a small entity, i.e., they are engaged in the business of fish harvesting, are independently owned or operated, are not dominant in their field of operation, and have annual gross receipts not in excess of $4 million. Therefore, there are no disproportionate economic impacts between large and small entities.

Description of Alternatives for the 2008–09 Fishing Year

Alternative 1 (No Action). The MHI Deep 7 bottomfish TAC would be set at 178,000 lb (80,739 kg). According to the latest stock assessment, this TAC represents zero percent risk of bottomfish overfishing in either the Hawaiian Archipelago or the MHI Management Subarea. With the fishing year opening on November 15, 2008, it is projected that the MHI Deep 7 bottomfish TAC under this alternative may be reached in May of 2009 given the most recent average catch efforts.

Alternative 2. The MHI Deep 7 bottomfish TAC would be set at 227,000 lb (102,965 kg). This TAC represents zero percent risk of archipelagic overfishing and a 25 percent risk of overfishing in the MHI Management Subarea during 2008–09. It is projected that the fishing year under this alternative may last until July 2009.

Alternative 3 (Preferred). The MHI Deep 7 bottomfish TAC would be set at 241,000 lb (109,316 kg). This TAC represents zero risk of archipelagic overfishing and an approximate 40 percent risk of MHI Management Subarea bottomfish overfishing in the 2008–09 fishing year. The fishing year under this alternative is projected to remain open until late July 2009.

Alternative 4. The MHI Deep 7 bottomfish TAC would be set at 249,000 lb (112,945 kg). This TAC represents no risk of archipelagic overfishing, while representing an approximate 50 percent risk of overfishing of MHI Management Subarea bottomfish in 2008–09. The fishing year under this alternative is projected to remain open until early August 2009.

Alternative 5. The MHI Deep 7 bottomfish TAC would be set at 271,000 lb (122,924 kg). This TAC represents zero risk of archipelagic overfishing while representing about a 75 percent chance of overfishing MHI Management Subarea bottomfish stocks. The fishing year under this alternative is projected to last through August 2009, and, therefore, may not close at all under this alternative.

Economic Impacts of the Specification

Using the same TAC as the 2007–08 bottomfish fishing year, Alternative 1 would have the TAC specified as 178,000 lb (80,739 kg) of MHI Deep 7 bottomfish, totaling $917,000 in gross revenues (based on a 2008 estimated average price of $5.15 per lb or $11.35 per kg) for the 2008–09 fishery. This would represent an average of $2,412 per vessel, assuming all 380 commercially licensed MHI bottomfish vessels were equally active. This status quo alternative is projected to have a zero percent risk of overfishing associated with the Deep 7 bottomfish TAC based on the most recent stock and risk assessments.

Alternatives 2–5 would all have positive short-term economic benefits to vessel owners based on an increase in revenues associated with greater TACs. At 2008 average prices for bottomfish, a proposed Deep 7 MHI bottomfish TAC of 271,000 lb (122,924 kg) for Alternative 5 would yield $1.4 million in gross revenues which is 52 percent more than the estimated revenues projected under Alternative 1 (i.e., status quo). However, in comparison to the other alternatives considered for this action, Alternative 5 represents the highest risk (est. 75 percent) of bottomfish overfishing to occur in the MHI during 2008–09.

A more conservative Deep 7 MHI bottomfish TAC would be adopted under Alternatives 2, 3, or 4, with the associated risk of overfishing MHI Deep 7 bottomfish being 25, 40, and 50 percent, respectively, during 2008–09. Alternative 2 would have the Deep 7 MHI bottomfish TAC specified as 227,000 lb (102,965 kg) during the 2008–09 fishing year. Total gross revenues for the MHI bottomfish fleet under Alternative 2 is estimated to be around $1.17 million, or averaged at $3,000 per vessel using an average bottomfish price of $5.15 per lb ($11.35 per kg). This represents an economic benefit to fishermen with a 28 percent increase in potential revenues compared to the status quo. Alternative 2 is associated with a 25 percent risk of MHI bottomfish overfishing in 2008–09, given the most recent stock assessment. Alternative 3, the Preferred Alternative, would have the Deep 7 MHI bottomfish TAC specified as 241,000 lb (109,316 kg) which is associated with an estimated risk of overfishing the MHI bottomfish stocks of 40 percent (2008–09). The expected total fleet-wide gross revenues associated with Alternative 3 would be around $1.24 million, or $3,266 per vessel, which would be a 35 percent increase in revenues over the status quo and a six percent marginal increase over Alternative 2. Alternative 4 would have the TAC specified as 249,000 lb (112,945 kg), which is associated with a 50 percent risk of overfishing MHI bottomfish in 2008–09 given the latest stock assessment. Total gross revenues under this alternative would be about $1.28 million ($3,375 per vessel), which is a 40 percent increase in revenues compared to the status quo (Alternative 1), and a 3.3 percent marginal increase in revenues compared with the Preferred Alternative 3.

This analysis assumes that only commercial MHI Deep 7 landings are counted toward the 2008–09 TAC. Although

data reporting requirements for non-commercial fishing have been established, it is expected that the non-commercial information will not be developed enough to generate meaningful projected estimates of 2008–09 non-commercial harvest.

Ceasing of Business Operations

The decision to cease fishing for bottomfish would depend on the ability of vessel owners to cover variable costs of operations in the short run. If costs of fuel and food remain at higher than normal levels, more vessels than normal would be expected to exit the fishery, especially in years when the TAC was low. In addition, as is pointed out in Amendment 14, low TACs could propel the fishery toward a ''race for the fish,'' putting downward pressure on prices and upward pressure on fuel and food costs, resulting in earlier than expected closures and larger number of vessels exiting the fishery prematurely.

This action is exempt from the procedures of E.O. 12866 because this action contains no implementing regulations.

Authority: 16 U.S.C. 1801 *et seq.*

Dated: December 4, 2008.

James W. Balsiger,

Acting Assistant Administrator For Fisheries, National Marine Fisheries Service.

[FR Doc. E8–29205 Filed 12–9–08; 8:45 am]

BILLING CODE 3510–22–S

DEPARTMENT OF COMMERCE

National Oceanic and Atmospheric Administration

50 CFR Part 679

[Docket No. 0810141351–81451–01]

RIN 0648–XL28

Fisheries of the Exclusive Economic Zone Off Alaska; Bering Sea and Aleutian Islands; Proposed 2009 and 2010 Harvest Specifications for Groundfish

AGENCY: National Marine Fisheries Service (NMFS), National Oceanic and Atmospheric Administration (NOAA), Commerce.

ACTION: Proposed rule; request for comments.

SUMMARY: NMFS proposes 2009 and 2010 harvest specifications and prohibited species catch allowances for the groundfish fisheries of the Bering Sea and Aleutian Islands management area (BSAI). This action is necessary to establish harvest limits for groundfish during the 2009 and 2010 fishing years and to accomplish the goals and objectives of the Fishery Management Plan for Groundfish of the Bering Sea and Aleutian Islands management area. The intended effect of this action is to conserve and manage the groundfish resources in the BSAI in accordance with the Magnuson–Stevens Fishery Conservation and Management Act.

DATES: Comments must be received by January 9, 2009.

ADDRESSES: Send comments to Sue Salveson, Assistant Regional Administrator, Sustainable Fisheries Division, Alaska Region, NMFS, Attn: Ellen Sebastian. You may submit comments, identified by RIN 0648–XL28, by any one of the following methods:

- Electronic Submissions: Submit all electronic public comments via the Federal eRulemaking Portal website at *http://www.regulations.gov*.
- Mail: P. O. Box 21668, Juneau, AK 99802.
- Fax: (907) 586–7557.
- Hand delivery to the Federal Building: 709 West 9th Street, Room 420A, Juneau, AK.

All comments received are a part of the public record and will generally be posted to *http://www.regulations.gov* without change. All Personal Identifying Information (e.g., name, address) voluntarily submitted by the commenter may be publicly accessible. Do not submit Confidential Business Information or otherwise sensitive or protected information.

NMFS will accept anonymous comments (enter N/A in the required fields, if you wish to remain anonymous). Attachments to electronic comments will be accepted in Microsoft Word, Excel, WordPerfect, or Adobe portable document file (pdf) formats only.

Copies of the Final Alaska Groundfish Harvest Specifications Environmental Impact Statement (Final EIS), Record of Decision (ROD), and Initial Regulatory Flexibility Analysis (IRFA) prepared for this action are available from NMFS at the mailing address above or from the Alaska Region website at *http://www.alaskafisheries.noaa.gov*. Copies of the final 2008 Stock Assessment and Fishery Evaluation (SAFE) report for the groundfish resources of the Bering Sea and Aleutian Islands (BSAI), dated November 2007, are available from the North Pacific Fishery Management Council (Council), 605 West 4th Avenue, Suite 306, Anchorage, AK 99510–2252, 907–271–2809, or from its website at *http://www.alaskafisheries.noaa.gov/npfmc/default.htm*.

FOR FURTHER INFORMATION CONTACT: Steve Whitney, 907–586–7269.

SUPPLEMENTARY INFORMATION: Federal regulations at 50 CFR part 679 implement the Fishery Management Plan for Groundfish of the Bering Sea and Aleutian Islands Management Area (FMP) and govern the groundfish fisheries in the BSAI. The Council prepared the FMP and NMFS approved it under the Magnuson–Stevens Fishery Conservation and Management Act (Magnuson–Stevens Act). General regulations governing U.S. fisheries also appear at 50 CFR part 600.

The FMP and its implementing regulations require NMFS, after consultation with the Council, to specify annually the total allowable catch (TAC) for each target species and the ''other species'' category, the sum of which must be within the optimum yield range of 1.4 million to 2.0 million metric tons (mt) (see § 679.20(a)(1)(i)). Section 679.20(c)(1) further requires NMFS to publish proposed harvest specifications in the **Federal Register** and solicit public comments on proposed annual TACs and apportionments thereof, prohibited species catch (PSC) allowances, and prohibited species quota (PSQ) reserves established by § 679.21, seasonal allowances of pollock, Pacific cod, and Atka mackerel TAC, Amendment 80 allocations, and Community Development Quota (CDQ) reserve amounts established by § 679.20(b)(1)(ii). The proposed harvest specifications set forth in Tables 1 through 12 of this action satisfy these requirements.

Under § 679.20(c)(3), NMFS will publish the final harvest specifications for 2009 and 2010 after (1) considering comments received within the comment period (see **DATES**), (2) consulting with the Council at its December 2008 meeting, and (3) considering new information presented in the Final EIS and the final 2008 SAFE reports prepared for the 2009 and 2010 groundfish fisheries.

Other Actions Potentially Affecting the 2009 and 2010 Harvest Specifications

The Council submitted Amendment 73 to the FMP. NMFS published a proposed rule in the **Federal Register** on September 24, 2008 (73 FR 55010). This amendment would remove dark rockfish (*Sebastes ciliatus*) from the ''other rockfish'' category and from the FMP. The State of Alaska would assume management of dark rockfish, and the TAC of the ''other rockfish'' category would be slightly smaller than in previous years. The Council is considering a proposal that would allocate the Pacific cod TAC by Bering Sea subarea and Aleutian Islands (AI) subarea instead of a combined BSAI TAC, although associated fishery

management implications would require more time to assess and resolve. As a result, a Pacific cod split is unlikely for 2009. Additional proposals being developed by the Plan Team for Council consideration would separate some species from the ''other species'' category so that individual overfishing levels (OFLs), acceptable biological catches (ABCs), and TACs may be established for these species. Another would allocate the ABC for rougheye rockfish by Bering Sea subarea and Aleutian Islands (AI) subarea instead of a combined BSAI ABC. These latter two proposals could change the final 2009 and 2010 harvest specifications. Additionally, the existing 2009 harvest specifications will be updated in early 2009 when final harvest specifications for 2009 and new harvest specifications for 2010 are implemented.

Proposed ABC and TAC Harvest Specifications

The proposed ABC levels are based on the best available biological information, including projected biomass trends, information on assumed distribution of stock biomass, and revised technical methods used to calculate stock biomass. In general, the development of ABCs and OFLs involves sophisticated statistical analyses of fish populations. The FMP specifies a series of six tiers based on the level of reliable information available to fishery scientists. Tier one represents the highest level of information quality available while tier six represents the lowest level of information quality available.

Appendix A to the final SAFE report for the 2008 BSAI groundfish fisheries dated November 2007 (see **ADDRESSES**) sets forth the best information currently available. Information on the status of stocks, including the 2008 survey results, will be updated and considered by the Council's Groundfish Plan Team in November 2008 for the 2008 SAFE report. The final 2009 and 2010 harvest specifications will be based on the 2008 SAFE report.

In October 2008, the Scientific and Statistical Committee (SSC), Advisory Panel, and the Council reviewed the Plan Team's recommended proposed 2009 and 2010 OFL and ABC amounts. The SSC concurred in the Plan Team's recommendations. The recommendations are based on rollovers of the current 2009 amounts. This uses the best information available from the 2007 stock assessments.

The Council adopted the OFL and ABC amounts recommended by the SSC (Table 1). The Council recommended that all the proposed 2009 and 2010 TAC amounts be set equal to the 2008 TAC amounts except for reduced TAC amounts for sablefish, Atka mackerel, Pacific ocean perch (POP), northern rockfish, and the ''other rockfish'' group. The adjustments from the 2008 TAC amounts account for the lower 2009 ABC amounts for these species. As in previous years, the Plan Team, Advisory Panel, SSC, and Council recommended that total removals of Pacific cod from the BSAI not exceed ABC recommendations. Accordingly, the Council recommended that the proposed 2009 and 2010 Pacific cod TACs be adjusted downward from the ABCs by amounts equal to 3 percent of the ABC. This adjustment is necessary to account for the guideline harvest level (GHL) established for Pacific cod by the State of Alaska (State) for a State–managed fishery that occurs in State waters in the AI subarea. Finally, the Council recommended using the 2008 and 2009 PSC allowances for the proposed 2009 and 2010 PSC allowances. The Council will reconsider the OFL, ABC, TAC, and PSC amounts in December 2008 after the Plan Team incorporates new status of groundfish stocks information into a final 2008 SAFE report for the 2009 and 2010 BSAI groundfish fishery. None of the Council's recommended proposed TACs for 2009 or 2010 exceeds the recommended 2009 or 2010 proposed ABC for any species category. NMFS finds the Council's recommended proposed 2009 and 2010 OFL, ABC, and TAC amounts consistent with the best available information on the biological condition of the groundfish stocks.

Table 1 lists the proposed 2009 and 2010 OFL, ABC, TAC, initial TAC (ITAC), and CDQ amounts for groundfish for the BSAI. The proposed apportionment of TAC amounts among fisheries and seasons is discussed below.

TABLE 1—PROPOSED 2009 AND 2010 OVERFISHING LEVEL (OFL), ACCEPTABLE BIOLOGICAL CATCH (ABC), TOTAL ALLOWABLE CATCH (TAC), INITIAL TAC (ITAC), AND CDQ RESERVE ALLOCATION OF GROUNDFISH IN THE BSAI[1]

[Amounts are in metric tons]

Species	Area	Proposed 2009 and 2010				
		OFL	ABC	TAC	ITAC[2]	CDQ[3,4,5]
Pollock[3]	BS	1,320,000	1,000,000	1,000,000	900,000	100,000
	AI	26,100	22,700	19,000	17,100	1,900
	Bogoslof	58,400	7,970	10	10	0
Pacific cod[4]	BSAI	207,000	176,000	170,720	152,453	18,267
Sablefish[5]	BS	2,910	2,610	2,610	1,109	98
	AI	2,510	2,230	2,230	474	41
Atka mackerel	BSAI	50,600	47,500	47,500	42,418	5,083
	EAI/BS	n/a	15,300	15,300	13,663	1,637
	CAI	n/a	19,000	19,000	16,967	2,033
	WAI	n/a	13,200	13,200	11,788	1,412
Yellowfin sole	BSAI	296,000	296,000	225,000	200,925	24,075
Rock sole	BSAI	379,000	375,000	75,000	66,975	8,025
Greenland turbot	BSAI	16,000	2,540	2,540	2,159	n/a
	BS	n/a	1,750	1,750	1,488	187
	AI	n/a	790	790	672	0

TABLE 1—PROPOSED 2009 AND 2010 OVERFISHING LEVEL (OFL), ACCEPTABLE BIOLOGICAL CATCH (ABC), TOTAL ALLOWABLE CATCH (TAC), INITIAL TAC (ITAC), AND CDQ RESERVE ALLOCATION OF GROUNDFISH IN THE BSAI[1]—Continued

[Amounts are in metric tons]

Species	Area	Proposed 2009 and 2010				
		OFL	ABC	TAC	ITAC[2]	CDQ[3,4,5]
Arrowtooth flounder	BSAI	300,000	246,000	75,000	63,750	8,025
Flathead sole	BSAI	83,700	69,700	50,000	44,650	5,350
Other flatfish[6]	BSAI	28,800	21,600	21,600	18,360	0
Alaska plaice	BSAI	277,000	217,000	50,000	42,500	0
Pacific ocean perch	BSAI	25,400	21,300	21,300	18,845	n/a
	BS	n/a	4,100	4,100	3,485	0
	EAI	n/a	4,810	4,810	4,295	515
	CAI	n/a	4,900	4,900	4,376	524
	WAI	n/a	7,490	7,490	6,689	801
Northern rockfish	BSAI	9,680	8,130	8,130	6,911	0
Shortraker rockfish	BSAI	564	424	424	360	0
Rougheye rockfish	BSAI	269	202	202	172	0
Other rockfish[7]	BSAI	1,290	968	968	823	0
	BS	n/a	414	414	352	0
	AI	n/a	554	554	471	0
Squid	BSAI	2,620	1,970	1,970	1,675	0
Other species[8]	BSAI	104,000	78,100	50,000	42,500	0
TOTAL		3,191,843	2,577,944	1,824,204	1,624,168	172,891

[1] These amounts apply to the entire BSAI management area unless otherwise specified. With the exception of pollock, and for the purpose of these harvest specifications, the Bering Sea (BS) subarea includes the Bogoslof District.

[2] Except for pollock, the portion of the sablefish TAC allocated to hook and line and pot gear, and Amendment 80 species, 15 percent of each TAC is put into a reserve. The ITAC for these species is the remainder of the TAC after the subtraction of these reserves.

[3] Under § 679.20(a)(5)(i)(A)(*1*), the annual Bering Sea subarea pollock TAC, after subtracting first for the CDQ directed fishing allowance (10 percent) and second for the incidental catch allowance (3.5 percent), is further allocated by sector for a directed pollock fishery as follows: inshore 50 percent; catcher/processor 40 percent; and motherships 10 percent. Under § 679.20(a)(5)(iii)(B)(*2*)(*i*) and (*ii*), the annual Aleutian Islands subarea pollock TAC, after subtracting first for the CDQ directed fishing allowance (10 percent) and second for the incidental catch allowance (1,600 mt), is allocated to the Aleut Corporation for a directed pollock fishery.

[4] The Pacific cod TAC is reduced by three percent from the ABC to account for the State of Alaska's guideline harvest level in State waters of the Aleutian Islands subarea.

[5] For the Amendment 80 species (Atka mackerel, Aleutian Islands Pacific ocean perch, yellowfin sole, rock sole, flathead sole, and Pacific cod), 10.7 percent of the TAC is reserved for use by CDQ participants (see §§ 679.20(b)(1)(ii)(C) and 679.31). Twenty percent of the sablefish TAC allocated to hook and line gear or pot gear, 7.5 percent of the sablefish TAC allocated to trawl gear, and 10.7 percent of the TACs for Bering Sea Greenland turbot and arrowtooth flounder are reserved for use by CDQ participants (see § 679.20(b)(1)(ii)(B) and (D)). Aleutian Islands Greenland turbot, ''other flatfish'', Alaska plaice, Bering Sea Pacific ocean perch, northern rockfish, shortraker rockfish, rougheye rockfish, ''other rockfish'', squid, and ''other species'' are not allocated to the CDQ program.

[6] ''Other flatfish'' includes all flatfish species, except for halibut (a prohibited species), flathead sole, Greenland turbot, rock sole, yellowfin sole, arrowtooth flounder, and Alaska plaice.

[7] ''Other rockfish'' includes all Sebastes and Sebastolobus species except for Pacific ocean perch, northern, shortraker, and rougheye rockfish.

[8] ''Other species'' includes sculpins, sharks, skates, and octopus. Forage fish, as defined at § 679.2, are not included in the ''other species'' category.

Reserves and the Incidental Catch Allowance (ICA) for Pollock, Atka Mackerel, Flathead Sole, Rock Sole, Yellowfin Sole, and Aleutian Islands Pacific Ocean Perch

Section 679.20(b)(1)(i) requires the placement of 15 percent of the TAC for each target species or ''other species'' category, except for pollock, the hook–and–line and pot gear allocation of sablefish, and the Amendment 80 species, in a non–specified reserve. Section 679.20(b)(1)(ii)(B) requires that 20 percent of the hook–and–line and pot gear allocation of sablefish be allocated to the fixed gear sablefish CDQ reserve. Section 679.20(b)(1)(ii)(D) requires that 7.5 percent of the trawl gear allocations of sablefish and 10.7 percent of Bering Sea Greenland turbot and arrowtooth flounder be allocated to the respective CDQ reserves. Section 679.20(b)(1)(ii)(C) requires that 10.7 percent of the TACs for Atka mackerel, Aleutian Islands Pacific ocean perch, yellowfin sole, rock sole, flathead sole, and Pacific cod be allocated to the CDQ reserves. Sections 679.20(a)(5)(i)(A) and 679.31(a) also require the allocation of 10 percent of the BSAI pollock TACs to the pollock CDQ directed fishing allowance (DFA). The entire Bogoslof District pollock TAC is allocated as an incidental catch allowance (ICA) (see § 679.20(a)(5)(ii)). With the exception of the hook–and–line and pot gear sablefish CDQ reserve, the regulations do not further apportion the CDQ reserves by gear. Section

679.21(e)(3)(i)(A) requires withholding 7.5 percent of the Chinook salmon PSC limit, 10.7 percent of the crab and non–Chinook salmon PSC limits, and 343 mt of halibut PSC as PSQ reserves for the CDQ fisheries. Sections 679.30 and 679.31 set forth regulations governing the management of the CDQ and PSQ reserves.

Pursuant to § 679.20(a)(5)(i)(A)(*1*), NMFS proposes a pollock ICA of 3.5 percent of the Bering Sea subarea pollock TAC after subtraction of the 10 percent CDQ reserve. This allowance is based on NMFS's examination of the pollock incidental catch, including the incidental catch by CDQ vessels, in target fisheries other than pollock from 1999 through 2008. During this 10-year period, the pollock incidental catch ranged from a low of 2.4 percent in 2006 to a high of 5 percent in 1999, with a 9-year average of 3 percent. Pursuant to § 679.20(a)(5)(iii)(B)(*2*)(*i*) and (*ii*), NMFS proposes a pollock ICA of 1,600 mt for AI subarea after subtraction of the 10 percent CDQ directed fishing allowance (DFA). This allowance is based on NMFS's examination of the pollock incidental catch, including the incidental catch by CDQ vessels, in target fisheries other than pollock from 2003 through 2008. During this 6-year period, the incidental catch of pollock ranged from a low of 5 percent in 2006 to a high of 10 percent in 2003, with a 5-year average of 6 percent.

Pursuant to § 679.20(a)(8) and (10), NMFS proposes ICAs of 4,500 mt of flathead sole, 5,000 mt of rock sole, 2,000 mt of yellowfin sole, 10 mt each of Western and Central Aleutian District for both Pacific ocean perch and Atka mackerel, 100 mt of Eastern Aleutian District Pacific ocean perch, and 200 mt of Eastern Aleutian District and Bering Sea subarea Atka mackerel after subtraction of the 10.7 percent CDQ reserve. These allowances are based on NMFS's examination of the incidental catch in other target fisheries from 2003 through 2008.

The regulations do not designate the remainder of the non–specified reserve by species or species group. Any amount of the reserve may be apportioned to a target species that contributed to the non–specified reserve and the ''other species'' category during the year, provided that such apportionments do not result in overfishing (see § 679.20(b)(1)(i)).

Allocations of Pollock TAC Under the American Fisheries Act (AFA)

Section 679.20(a)(5)(i)(A) requires that the pollock TAC apportioned to the Bering Sea subarea, after subtraction of 10 percent for the CDQ program and 3.5 percent for the ICA, be allocated as a DFA as follows: 50 percent to the inshore sector, 40 percent to the catcher/processor sector, and 10 percent to the mothership sector. In the Bering Sea subarea, 40 percent of the DFA is allocated to the A season (January 20–June 10) and 60 percent of the DFA is allocated to the B season (June 10–November 1). The AI directed pollock fishery allocation to the Aleut Corporation is the amount of pollock remaining in the AI subarea after subtracting 1,900 mt for the CDQ DFA (10 percent) and 1,600 mt for the ICA. In the AI subarea, 40 percent of the ABC is allocated to the A season and the remainder of the directed pollock fishery is allocated to the B season. Table 2 lists these proposed 2009 and 2010 amounts.

Section 679.20(a)(5)(i)(A)(*4*) also includes several specific requirements regarding Bering Sea subarea pollock allocations. First, 8.5 percent of the pollock allocated to the catcher/processor sector will be available for harvest by AFA catcher vessels with catcher/processor sector endorsements, unless the Regional Administrator receives a cooperative contract that provides for the distribution of harvest among AFA catcher/processors and AFA catcher vessels in a manner agreed to by all members. Second, AFA catcher/processors not listed in the AFA are limited to harvesting not more than 0.5 percent of the pollock allocated to the catcher/processor sector. Table 2 lists the proposed 2009 and 2010 allocations of pollock TAC. Tables 9 through 12 list the AFA catcher/processor and catcher vessel harvesting sideboard limits. In past years, the proposed harvest specifications included text and tables describing pollock allocations to the Bering Sea subarea inshore pollock cooperatives and open access sector. These allocations are based on the submission of AFA inshore cooperative applications due to NMFS on December 1 of each calendar year. Because AFA inshore cooperative applications for 2009 have not yet been submitted to NMFS, thereby preventing NMFS from calculating 2009 allocations, NMFS has not included inshore cooperative text and tables in these proposed harvest specifications. NMFS will post AFA inshore cooperative allocations on the Alaska Region website at *http://www.alaskafisheries.noaa.gov* when they become available in December 2008.

Table 2 also lists proposed seasonal apportionments of pollock and harvest limits within the Steller Sea Lion Conservation Area (SCA). The harvest of pollock within the SCA, as defined at § 679.22(a)(7)(vii), is limited to 28 percent of the DFA until April 1. The remaining 12 percent of the 40 percent annual DFA allocated to the A season may be taken outside the SCA before April 1 or inside the SCA after April 1. If less than 28 percent of the annual DFA is taken inside the SCA before April 1, the remainder will be available to be taken inside the SCA after April 1. The A season pollock SCA harvest limit will be apportioned to each sector in proportion to each sector's allocated percentage of the DFA. Table 2 lists by sector these proposed 2009 and 2010 amounts.

TABLE 2—PROPOSED 2009 AND 2010 ALLOCATIONS OF POLLOCK TACS TO THE DIRECTED POLLOCK FISHERIES AND TO THE CDQ DIRECTED FISHING ALLOWANCES (DFA)[1]

[Amounts are in metric tons]

Area and sector	2009 and 2010 allocations	2009 and 2010 A season[1]		2009 and 2010 B season[1]
		A season DFA	SCA harvest limit[2]	B season DFA
Bering Sea subarea TAC	1,000,000	n/a	n/a	n/a
CDQ DFA	100,000	40,000	28,000	60,000
ICA [1]	31,500	n/a	n/a	n/a
AFA Inshore	434,250	173,700	121,590	260,550
AFA Catcher/Processors[3]	347,400	138,960	97,272	208,440
Catch by C/Ps	317,871	127,148	n/a	190,723
Catch by CVs[3]	29,529	11,812	n/a	17,717
Unlisted C/P Limit[4]	1,737	695	n/a	1,042

TABLE 2—PROPOSED 2009 AND 2010 ALLOCATIONS OF POLLOCK TACS TO THE DIRECTED POLLOCK FISHERIES AND TO THE CDQ DIRECTED FISHING ALLOWANCES (DFA)[1]—Continued

[Amounts are in metric tons]

Area and sector	2009 and 2010 allocations	2009 and 2010 A season[1]		2009 and 2010 B season[1]
		A season DFA	SCA harvest limit[2]	B season DFA
AFA Motherships	86,850	34,740	24,318	52,110
Excessive Harvesting Limit[5]	151,988	n/a	n/a	n/a
Excessive Processing Limit[6]	260,550	n/a	n/a	n/a
Total Bering Sea DFA (non-CDQ)	868,501	347,400	243,180	521,100
Aleutian Islands subarea[1]	19,000	n/a	n/a	n/a
CDQ DFA	1,900	760	n/a	1,140
ICA	1,600	800	n/a	800
Aleut Corporation	15,500	10,200	n/a	5,300
Bogoslof District ICA[7]	10	n/a	n/a	n/a

[1] Pursuant to § 679.20(a)(5)(i)(A), the annual Bering Sea subarea pollock TAC, after subtraction for the CDQ DFA (10 percent) and the ICA (3.5 percent), is allocated as a DFA as follows: inshore sector 50 percent, catcher/processor sector 40 percent, and mothership sector 10 percent. In the Bering Sea subarea, 40 percent of the DFA is allocated to the A season (January 20 June 10) and 60 percent of the DFA is allocated to the B season (June 10 November 1). Pursuant to § 679.20(a)(5)(iii)(B)(*2*)(*i*) and (*ii*), the annual AI pollock TAC, after subtracting first for the CDQ DFA (10 percent) and second the ICA (1,600 mt), is allocated to the Aleut Corporation for a directed pollock fishery. In the AI subarea, the A season is allocated 40 percent of the ABC and the B season is allocated the remainder of the directed pollock fishery.

[2] In the Bering Sea subarea, no more than 28 percent of each sector's annual DFA may be taken from the sealion conservation area (SCA) before April 1. The remaining 12 percent of the annual DFA allocated to the A season may be taken outside of the SCA before April 1 or inside the SCA after April 1. If 28 percent of the annual DFA is not taken inside the SCA before April 1, the remainder is available to be taken inside the SCA after April 1.

[3] Pursuant to § 679.20(a)(5)(i)(A)(*4*), not less than 8.5 percent of the DFA allocated to listed catcher/processors (C/Ps) shall be available for harvest only by eligible catcher vessels (CVs) delivering to listed catcher/processors.

[4] Pursuant to § 679.20(a)(5)(i)(A)(*4*)(*iii*), the AFA unlisted catcher/processors are limited to harvesting not more than 0.5 percent of the catcher/processors sector's allocation of pollock.

[5] Pursuant to § 679.20(a)(5)(i)(A)(*6*), NMFS establishes an excessive harvesting share limit equal to 17.5 percent of the sum of the pollock DFAs not including CDQ.

[6] Pursuant to § 679.20(a)(5)(i)(A)(*7*), NMFS establishes an excessive processing share limit equal to 30.0 percent of the sum of the pollock DFAs not including CDQ.

[7] The Regional Administrator proposes closing the Bogoslof pollock fishery for directed fishing under the final 2009 and 2010 harvest specifications for the BSAI. The amounts specified are for incidental catch only and are not apportioned by season or sector.

Allocation of the Atka Mackerel TACs

Section 679.20(a)(8)(ii) allocates the Atka mackerel TACs, after subtraction of the CDQ reserves, jig gear allocation, and ICAs for the BSAI trawl limited access sector and non–trawl gear, to the Amendment 80 and BSAI trawl limited access sectors (Table 3). The allocation of the ITAC for Atka mackerel to the Amendment 80 and BSAI trawl limited access sectors is established in Table 33 to part 679 and § 679.91.

Pursuant to § 679.20(a)(8)(i), up to 2 percent of the Eastern Aleutian District and Bering Sea subarea Atka mackerel ITAC may be allocated to jig gear. The amount of this allocation is determined annually by the Council based on several criteria, including the anticipated harvest capacity of the jig gear fleet. The Council recommended and NMFS proposes a 0.5 percent allocation of the Atka mackerel ITAC in the Eastern Aleutian District and Bering Sea subarea to jig gear in 2009 and 2010. Based on the proposed 2009 and 2010 TAC of 15,300 mt after subtractions of the CDQ reserve and ICA, the jig gear allocation would be 67 mt for 2009 and 2010.

Section 679.20(a)(8)(ii)(A) apportions the Atka mackerel ITAC into two equal seasonal allowances. The first seasonal allowance is made available for directed fishing from January 1 (January 20 for trawl gear) to April 15 (A season), and the second seasonal allowance is made available from September 1 to November 1 (B season). The jig gear allocation is not apportioned by season.

Pursuant to § 679.20(a)(8)(ii)(C)(*1*), the Regional Administrator will establish a harvest limit area (HLA) limit of no more than 60 percent of the seasonal TAC for the Western and Central Aleutian Districts.

NMFS will establish HLA limits for the CDQ reserve and each of the three non–CDQ fishery categories: the BSAI trawl limited access sector; the Amendment 80 limited access fishery; and an aggregate HLA limit applicable to all Amendment 80 cooperatives. NMFS will assign vessels in each of the three non–CDQ fishery categories that apply to fish for Atka mackerel in the HLA to an HLA fishery based on a random lottery of the vessels that apply (see § 679.20(a)(8)(iii)). There is no allocation of Atka mackerel to the BSAI trawl limited access sector in the Western Aleutian District. Therefore, no vessels in the BSAI trawl limited access sector will be assigned to the Western Aleutian District HLA fishery.

Each trawl sector will have a separate lottery. A maximum of two HLA fisheries will be established in Area 542 for the BSAI trawl limited access sector. A maximum of four HLA fisheries will be established for vessels assigned to Amendment 80 cooperatives: a first and second HLA fishery in Area 542, and a first and second HLA fishery in Area 543. A maximum of four HLA fisheries will be established for vessels assigned to the Amendment 80 limited access fishery: a first and second HLA fishery in Area 542, and a first and second HLA fishery in Area 543. NMFS will initially open fishing for the first HLA fishery in all three fishery categories at the same time. The initial opening of fishing in the HLA will be based on the first directed fishing closure of Atka mackerel for the Eastern Aleutian District and Bering Sea subarea allocation for any one of the three non–CDQ fishery categories allocated Atka mackerel TAC.

TABLE 3—PROPOSED 2009 AND 2010 SEASONAL AND SPATIAL ALLOWANCES, GEAR SHARES, CDQ RESERVE, INCIDENTAL CATCH ALLOWANCE, AND AMENDMENT 80 ALLOCATIONS OF THE BSAI ATKA MACKEREL TAC

[Amounts are in metric tons]

Sector[2]	Season[1,3,4]	2009 allocation by area			2010 allocation by area		
		Eastern Aleutian District/ Bering Sea	Central Aleutian District	Western Aleutian District	Eastern Aleutian District/ Bering Sea	Central Aleutian District	Western Aleutian District
TAC	n/a	15,300	19,000	13,200	15,300	19,000	13,200
CDQ reserve	Total	1,637	2,033	1,412	1,637	2,033	1,412
	HLA[5]	n/a	1,220	847	n/a	1,220	847
ICA	Total	200	20	20	200	20	20
Jig[6]	Total	67	0	0	67	0	0
BSAI trawl limited access	Total	536	678	0	804	1,017	0
	A	268	339	0	402	508	0
	HLA	n/a	203	0	n/a	305	0
	B	268	339	0	402	508	0
	HLA	n/a	203	0	n/a	305	0
Amendment 80 limited access	Total	6,835	9,796	7,254	6,683	9,590	7,255
	A	3,418	4,898	3,627	3,342	4,795	3,628
	HLA	n/a	2,939	2,176	n/a	2,877	2,177
	B	3,418	4,898	3,627	3,342	4,795	3,628
	HLA	n/a	2,939	2,176	n/a	2,877	2,177
Amendment 80 cooperatives	Total	6,025	6,473	4,514	5,909	6,340	4,513
	A	3,013	3,237	2,257	2,955	3,170	2,257
	HLA	n/a	1,942	1,354	n/a	1,902	1,354
	B	3,013	3,237	2,257	2,955	3,170	2,257
	HLA	n/a	1,942	1,354	n/a	1,902	1,354

[1] Regulations at §§ 679.20(a)(8)(ii)(A) and 679.22(a) establish temporal and spatial limitations for the Atka mackerel fishery.
[2] Section 679.20(a)(8)(ii) allocates the Atka mackerel TACs, after subtraction of the CDQ reserves, ICAs, and the jig gear allocation, to the Amendment 80 and BSAI trawl limited access sectors. The allocation of the ITAC for Atka mackerel to the Amendment 80 and BSAI trawl limited access sectors is established in Table 33 to part 679 and § 679.91. The CDQ reserve is 10.7 percent of the TAC for use by CDQ participants (see §§ 679.20(b)(1)(ii)(C) and 679.31).
[3] The seasonal allowances of Atka mackerel are 50 percent in the A season and 50 percent in the B season.
[4] The A season is January 1 (January 20 for trawl gear) to April 15, and the B season is September 1 to November 1.
[5] Harvest Limit Area (HLA) limit refers to the amount of each seasonal allowance that is available for fishing inside the HLA (see § 679.2). In 2009 and 2010, 60 percent of each seasonal allowance is available for fishing inside the HLA in the Western and Central Aleutian Districts.
[6] Section 679.20(a)(8)(i) requires that up to 2 percent of the Eastern Aleutian District and Bering Sea subarea TAC be allocated to jig gear after subtraction of the CDQ reserve and ICA. The amount of this allocation is 0.5 percent. The jig gear allocation is not apportioned by season.

Allocation of the Pacific Cod TAC

Section 679.20(a)(7)(i) and (ii) requires that the Pacific cod TAC in the BSAI, after subtraction of 10.7 percent for the CDQ program, be allocated as follows: 1.4 percent to vessels using jig gear, 2.0 percent to hook–and–line and pot catcher vessels less than 60 ft (18.3 m) length overall (LOA), 0.2 percent to hook–and–line catcher vessels greater than or equal to 60 ft (18.3 m) LOA, 48.7 percent to hook–and–line catcher/processors, 8.4 percent to pot catcher vessels greater than or equal to 60 ft (18.3 m) LOA, 1.5 percent to pot catcher/processors, 2.3 percent to AFA trawl catcher/processors, 13.4 percent to non–AFA trawl catcher/processors, and 22.1 percent to trawl catcher vessels. The ICA for the hook–and–line and pot sectors will be deducted from the aggregate portion of Pacific cod TAC allocated to the hook–and–line and pot sectors. The Regional Administrator proposes an ICA of 500 mt for 2009 and 2010 based on anticipated incidental catch in these fisheries. The allocation of the ITAC for Pacific cod to the Amendment 80 sector is established in Table 33 to part 679 and § 679.91.

The Pacific cod ITAC is apportioned into seasonal allowances to disperse the Pacific cod fisheries over the fishing year (see §§ 679.20(a)(7) and 679.23(e)(5)). In accordance with § 679.20(a)(7)(iv)(B) and (C), any unused portion of a seasonal Pacific cod allowance will become available at the beginning of the next seasonal allowance.

Pursuant to §§ 679.20(a)(7)(i)(B) and 679.23(e)(5), the CDQ season allowances by gear are as follows: for most hook–and–line catcher/processors and hook–and–line catcher vessels greater than or equal to 60 ft (18.3 m) LOA, the first

seasonal allowance of 60 percent of the ITAC is made available for directed fishing from January 1 to June 10, and the second seasonal allowance of 40 percent of the ITAC is made available from June 10 to December 31. No seasonal harvest constraints are imposed on the Pacific cod fishery for pot gear or catcher vessels less than 60 ft (18.3 m) LOA using hook–and–line gear. For trawl gear, the first season is January 20 to April 1 and is allocated 60 percent of the ITAC. The second season, April 1 to June 10, and the third season, June 10 to November 1, are each allocated 20 percent of the ITAC. The trawl catcher vessel allocation is further allocated as 70 percent in the first season, 10 percent in the second season, and 20 percent in the third season. The trawl catcher/processor allocation is allocated 50 percent in the first season, 30 percent in the second season, and 20 percent in the third season. For jig gear, the first and third seasonal allowances are each allocated 40 percent of the ITAC, and the second seasonal allowance is allocated 20 percent of the ITAC.

Pursuant to §§ 679.20(a)(7)(iv)(A) and 679.23(e)(5), the non–CDQ season allowances by gear are as follows. For hook–and–line and pot catcher/processors and hook–and–line and pot vessels greater than or equal to 60 ft (18.3 m) LOA, the first seasonal allowance of 51 percent of the ITAC is made available for directed fishing from January 1 to June 10, and the second seasonal allowance of 49 percent of the ITAC is made available from June 10 (September 1 for pot gear) to December 31. No seasonal harvest constraints are imposed on the Pacific cod fishery for catcher vessels less than 60 ft (18.3 m) LOA using hook–and–line or pot gear. For trawl gear, the first season is January 20 to April 1, the second season is April 1 to June 10, and the third season is June 10 to November 1. The trawl catcher vessel allocation is further allocated as 74 percent in the first season, 11 percent in the second season, and 15 percent in the third season. The trawl catcher/processor allocation is allocated 75 percent in the first season, 25 percent in the second season, and zero percent in the third season. For jig gear, the first seasonal allowance is allocated 60 percent of the ITAC, and the second and third seasonal allowances are each allocated 20 percent of the ITAC. Table 4 lists the proposed 2009 and 2010 allocations and seasonal apportionments of the Pacific cod TAC.

TABLE 4—PROPOSED 2009 AND 2010 GEAR SHARES AND SEASONAL ALLOWANCES OF THE BSAI PACIFIC COD TAC

[Amounts are in metric tons]

Gear sector	Percent	2009 and 2010 share of gear sector total	2009 and 2010 share of sector total	2009 and 2010 seasonal apportionment	
				Season	Amount
Total TAC	100	170,720	n/a	n/a	n/a
CDQ	10.7	18,267	n/a	see § 679.20(a)(7)(i)(B)	n/a
Total hook-and-line/pot gear	60.8	92,691	n/a	n/a	n/a
Hook-and-line/pot ICA[1]	n/a	n/a	500	n/a	n/a
Hook-and-line/pot sub-total	n/a	92,191	n/a	n/a	n/a
Hook-and-line catcher/processors	48.7	n/a	73,844	Jan 1-Jun 10	37,660
				Jun 10-Dec 31	36,184
Hook-and-line catcher vessels ≥ 60 ft LOA	0.2	n/a	303	Jan 1-Jun 10	155
				Jun 10-Dec 31	149
Pot catcher/processors	1.5	n/a	2,274	Jan 1-Jun 10	1,160
				Sept 1-Dec 31	1,114
Pot catcher vessels ≥ 60 ft LOA	8.4	n/a	12,737	Jan 1-Jun 10	6,496
				Sept 1-Dec 31	6,241
Catcher vessels < 60 ft LOA using hook-and-line or pot gear	2.0	n/a	3,033	n/a	n/a
Trawl catcher vessels	22.1	33,692	n/a	Jan 20-Apr 1	24,932
				Apr 1-Jun 10	3,706
				Jun 10-Nov 1	5,054
AFA trawl catcher processors	2.3	3,506	n/a	Jan 20-Apr 1	2,630
				Apr 1- Jun 10	877
				Jun 10-Nov 1	0
Amendment 80	13.4	20,429	n/a	Jan 20-Apr 1	15,322

TABLE 4—PROPOSED 2009 AND 2010 GEAR SHARES AND SEASONAL ALLOWANCES OF THE BSAI PACIFIC COD TAC—Continued

[Amounts are in metric tons]

Gear sector	Percent	2009 and 2010 share of gear sector total	2009 and 2010 share of sector total	2009 and 2010 seasonal apportionment	
				Season	Amount
				Apr 1- Jun 10	5,107
				Jun 10-Nov 1	0
Amendment 80 limited access	n/a	3,357	n/a	Jan 20-Apr 1	2,518
				Apr 1- Jun 10	839
				Jun 10-Nov 1	0
Amendment 80 cooperative	n/a	17,072	n/a	Jan 20-Apr 1	12,804
				Apr 1- Jun 10	4,268
				Jun 10-Nov 1	0
Jig	1.4	2,134	n/a	Jan 1-Apr 30	1,281
				Apr 30-Aug 31	427
				Aug 31-Dec 31	427

[1] The ICA for the hook-and-line and pot sectors will be deducted from the aggregate portion of Pacific cod TAC allocated to the hook-and-line and pot sectors. The Regional Administrator proposes an ICA of 500 mt for 2009 and 2010 based on anticipated incidental catch in these fisheries.

Sablefish Gear Allocation

Sections 679.20(a)(4)(iii) and (iv) require the allocation of sablefish TACs for the Bering Sea and AI subareas between trawl gear and hook–and–line or pot gear. Gear allocations of the TACs for the Bering Sea subarea are 50 percent for trawl gear and 50 percent for hook–and–line or pot gear and for the AI subarea are 25 percent for trawl gear and 75 percent for hook–and–line or pot gear. Section 679.20(b)(1)(ii)(B) requires apportionment of 20 percent of the hook–and–line and pot gear allocation of sablefish to the CDQ reserve. Additionally, § 679.20(b)(1)(ii)(D) requires apportionment of 7.5 percent of the trawl gear allocation of sablefish to the CDQ reserve. The Council recommended that only trawl sablefish TAC be established biennially. The harvest specifications for the hook–and–line gear and pot gear sablefish Individual Fishing Quota (IFQ) fisheries will be limited to the 2009 fishing year to ensure those fisheries are conducted concurrently with the halibut IFQ fishery. Concurrent sablefish and halibut IFQ fisheries would reduce the potential for discards of halibut and sablefish in those fisheries. The sablefish IFQ fisheries would remain closed at the beginning of each fishing year until the final harvest specifications for the sablefish IFQ fisheries are in effect. Table 5 lists the proposed 2009 and 2010 gear allocations of the sablefish TAC and CDQ reserve amounts.

TABLE 5—PROPOSED 2009 AND 2010 GEAR SHARES AND CDQ RESERVE OF BSAI SABLEFISH TACS

[Amounts are in metric tons]

Subarea and gear	Percent of TAC	2009 Share of TAC	2009 ITAC[1]	2009 CDQ reserve	2010 ITAC	2010 ITAC	2010 CDQ reserve
Bering Sea							
Trawl	50	1,305	1,109	98	1,305	1,109	98
Hook-and-line gear[2]	50	1,305	n/a	261	n/a	n/a	n/a
TOTAL	100	2,610	1,109	359	2,610	1,109	98
Aleutian Islands							
Trawl	25	558	474	42	558	474	42
Hook-and-line gear[2]	75	1,673	n/a	335	n/a	n/a	n/a
TOTAL	100	2,230	474	376	2,230	474	42

[1] Except for the sablefish hook-and-line or pot gear allocation, 15 percent of TAC is apportioned to the reserve. The ITAC is the remainder of the TAC after the subtraction of these reserves.

[2] For the portion of the sablefish TAC allocated to vessels using hook and line or pot gear, 20 percent of the allocated TAC is reserved for use by CDQ participants. Section 679.20(b)(1) does not provide for the establishment of an ITAC for sablefish allocated to hook-and-line or pot gear.

Allocation of the Aleutian Islands Pacific Ocean Perch, Flathead Sole, Rock Sole, and Yellowfin Sole TACs

Sections 679.20(a)(10)(i) and (ii) require the allocation between the Amendment 80 sector and BSAI trawl limited access for Aleutian Islands Pacific ocean perch, flathead sole, rock sole, and yellowfin sole TACs in the BSAI, after subtraction of 10.7 percent for the CDQ reserve and an ICA for the BSAI trawl limited access sector and vessels using non–trawl gear. The allocation of the ITAC for Aleutian Islands Pacific ocean perch, flathead sole, rock sole, and yellowfin sole to the Amendment 80 sector is established in Tables 33 and 34 to part 679 and § 679.91. Table 6 lists the proposed 2009 and 2010 allocations and seasonal apportionments of the Aleutian Islands Pacific ocean perch, flathead sole, rock sole, and yellowfin sole TACs.

TABLE 6—PROPOSED 2009 AND 2010 COMMUNITY DEVELOPMENT QUOTA (CDQ) RESERVES, INCIDENTAL CATCH AMOUNTS (ICAS), AND AMENDMENT 80 ALLOCATIONS OF THE ALEUTIAN ISLANDS PACIFIC OCEAN PERCH, FLATHEAD SOLE, ROCK SOLE, AND YELLOWFIN SOLE TACS

[Amounts are in metric tons]

Sector	Pacific ocean perch						Flathead sole	Rock sole	Yellowfin sole	
	Eastern Aleutian District		Central Aleutian District		Western Aleutian District		BSAI	BSAI	BSAI	
	2009	2010	2009	2010	2009	2010	2009 and 2010	2009 and 2010	2009	2010
TAC	4,810	4,810	4,900	4,900	7,490	7,490	50,000	75,000	225,000	225,000
CDQ	515	515	524	524	801	801	5,350	8,025	24,075	24,075
ICA	100	100	10	10	10	10	4,500	5,000	2,000	2,000
BSAI trawl limited access	420	420	437	437	134	134	0	0	44,512	44,512
Amendment 80	3,776	3,776	3,929	3,929	6,545	6,545	40,150	61,975	154,413	154,413
Amendment 80 limited access[1]	2,002	2,002	2,083	2,083	3,470	3,470	4,686	15,260	61,595	61,595
Amendment 80 cooperatives[1]	1,774	1,774	1,846	1,846	3,075	3,075	35,464	46,715	92,818	92,818

[1]The 2010 allocations for Amendment 80 species between Amendment 80 cooperatives and the Amendment 80 limited access sector will not be known until eligible participants apply for participation in the program by November 1, 2009.

Allocation of PSC Limits for Halibut, Salmon, Crab, and Herring

Section 679.21(e) sets forth the BSAI PSC limits. Pursuant to § 679.21(e)(1)(iv) and (e)(2), the 2009 and 2010 BSAI halibut mortality limits are 3,675 mt for trawl fisheries and 900 mt for the non–trawl fisheries. Section 679.21(e)(3)(i)(A)(*2*) and (e)(4)(i)(A) allocates 276 mt in 2009 and 326 mt in 2010 of the trawl halibut mortality limit and allocates 7.5 percent, or 67 mt, of the non–trawl halibut mortality limit as the prohibited species quota (PSQ) reserve for use by the groundfish CDQ program. Section 679.21(e)(1)(vii) specifies 29,000 fish as the 2009 and 2010 Chinook salmon PSC limit for the Bering Sea subarea pollock fishery. Section 679.21(e)(3)(i)(A)(*3*)(*i*) allocates 7.5 percent, or 2,175 Chinook salmon, as the PSQ reserve for the CDQ program and allocates the remaining 26,825 Chinook salmon to the non–CDQ fisheries. Section 679.21(e)(1)(ix) specifies 700 fish as the 2009 and 2010 Chinook salmon PSC limit for the AI subarea pollock fishery. Section 679.21(e)(3)(i)(A)(*3*)(*i*) allocates 7.5 percent, or 53 Chinook salmon, as the AI subarea PSQ for the CDQ program and allocates the remaining 647 Chinook salmon to the non–CDQ fisheries. Section 679.21(e)(1)(viii) specifies 42,000 fish as the 2009 and 2010 non–Chinook salmon PSC limit. Section 679.21(e)(3)(i)(A)(*3*)(*ii*) allocates 10.7 percent, or 4,494 non–Chinook salmon, as the PSQ for the CDQ program and allocates the remaining 37,506 non–Chinook salmon to the non–CDQ fisheries.

PSC limits for crab and herring are specified annually based on abundance and spawning biomass. Due to the lack of new information as of October 2008 regarding PSC limits and apportionments, the Council recommended and NMFS proposes using the crab and herring 2008 and 2009 PSC limits and apportionments for the proposed 2009 and 2010 limits and apportionments. The Council will reconsider these amounts in December 2008, based on recommendations by the Plan Team and the SSC. Pursuant to § 679.21(e)(3)(i)(A)(*1*), 10.7 percent of each PSC limit specified for crab is allocated as a PSQ reserve for use by the groundfish CDQ program.

The red king crab mature female abundance is estimated from the 2007 survey data at 33.4 million red king crabs, and the effective spawning biomass is estimated at 73 million lb (33,113 mt). Based on the criteria set out at § 679.21(e)(1)(ii), the proposed 2009 and 2010 PSC limit of red king crab in Zone 1 for trawl gear is 197,000 animals. This limit derives from the mature female abundance estimate of more than 84 million king crab and the effective spawning biomass estimate of more than 55 million lbs (24,948 mt).

Section 679.21(e)(3)(ii)(B)(*2*) establishes criteria under which NMFS must specify an annual red king crab bycatch limit for the Red King Crab Savings Subarea (RKCSS). The regulations limit the RKCSS to up to 25 percent of the red king crab PSC allowance based on the need to optimize the groundfish harvest relative to red king crab bycatch. NMFS proposes the Council's recommendation that the red king crab bycatch limit be equal to 25 percent of the red king crab

PSC allowance within the RKCSS (Table 7b).

Based on 2007 survey data, Tanner crab (*Chionoecetes bairdi*) abundance is estimated at 787 million animals. Given the criteria set out at § 679.21(e)(1)(iii), the calculated 2009 and 2010 *C. bairdi* crab PSC limit for trawl gear is 980,000 animals in Zone 1 and 2,970,000 animals in Zone 2. These limits are derived from the *C. bairdi* crab abundance estimate being in excess of the 400 million animal threshold specified in § 679.21(e)(1)(ii).

Pursuant to § 679.21(e)(1)(iv), the PSC limit for snow crab (*C. opilio*) is based on total abundance as indicated by the NMFS annual bottom trawl survey. The *C. opilio* crab PSC limit is set at 0.1133 percent of the Bering Sea abundance index. Based on the 2007 survey estimate of 3.33 billion animals, the calculated limit is 4,350,000 animals.

Pursuant to § 679.21(e)(1)(vi), the PSC limit of Pacific herring caught while conducting any trawl operation for BSAI groundfish is 1 percent of the annual eastern Bering Sea herring biomass. The best estimate of 2009 and 2010 herring biomass is 172,644 mt. This amount was derived using 2007 survey data and an age–structured biomass projection model developed by the Alaska Department of Fish and Game. Therefore, the herring PSC limit proposed for 2009 and 2010 is 1,726 mt for all trawl gear as presented in Tables 7a and b.

Section 679.21(e)(3) requires, after subtraction of PSQ reserves, that crab and halibut trawl PSC be apportioned between the BSAI trawl limited access and Amendment 80 sectors as presented in Table 7a. The amount of the 2009 PSC limits assigned to the Amendment 80 sector is specified in Table 35 to part 679. Pursuant to § 679.21(e)(1)(iv) and § 679.91(d) through (f), crab and halibut trawl PSC assigned to the Amendment 80 sector is then sub–allocated to Amendment 80 cooperatives as PSC cooperative quota (CQ) and to the Amendment 80 limited access fishery as presented in Tables 7d and e. PSC CQ assigned to Amendment 80 cooperatives is not allocated to specific fishery categories. The 2010 PSC allocations between Amendment 80 cooperatives and the Amendment 80 limited access sector will not be known until eligible participants apply for participation in the program by November 1, 2009. Section 679.21(e)(3)(i)(B) requires the apportionment of each trawl PSC limit not assigned to Amendment 80 cooperatives into PSC bycatch allowances for seven specified fishery categories.

Section 679.21(e)(4) authorizes the apportionment of the non–trawl halibut PSC limits into PSC bycatch allowances among six fishery categories. Table 7c lists the fishery bycatch allowances for the BSAI trawl limited access and non–trawl fisheries.

As in past years after consultation with the Council, NMFS proposes to exempt pot gear, jig gear, and the sablefish IFQ hook–and–line gear fishery categories from halibut bycatch restrictions because 1) the pot gear fisheries have low halibut bycatch mortality, 2) halibut mortality for the jig gear fleet is assumed to be negligible, and 3) the sablefish and halibut IFQ fisheries have low halibut bycatch mortality because the IFQ program requires legal–size halibut to be retained by vessels using hook–and–line gear if a halibut IFQ permit holder or a hired master is aboard and is holding unused halibut IFQ (subpart D of 50 CFR part 679). In 2008, total groundfish catch for the pot gear fishery in the BSAI was approximately 22,000 mt, with an associated halibut bycatch mortality of about 1 mt. The 2008 jig gear fishery harvested about 176 mt of groundfish. Most vessels in the jig gear fleet are less than 60 ft (18.3 m) LOA and thus are exempt from observer coverage requirements. As a result, observer data are not available on halibut bycatch in the jig gear fishery. However, a negligible amount of halibut bycatch mortality is assumed because of the selective nature of jig gear and the low mortality rate of halibut caught with jig gear and released.

Section 679.21(e)(5) authorizes NMFS, after consultation with the Council, to establish seasonal apportionments of PSC amounts for the BSAI trawl limited access and Amendment 80 limited access sectors in order to maximize the ability of the fleet to harvest the available groundfish TAC and to minimize bycatch. The factors to be considered are 1) seasonal distribution of prohibited species, 2) seasonal distribution of target groundfish species, 3) PSC bycatch needs on a seasonal basis relevant to prohibited species biomass, 4) expected variations in bycatch rates throughout the year, 5) expected start of fishing effort, and 6) economic effects of seasonal PSC apportionments on industry sectors. NMFS proposes the Council's recommendation of the seasonal PSC apportionments in Tables 7c and 7e to maximize harvest among gear types, fisheries, and seasons while minimizing bycatch of PSC based on the above criteria.

TABLE 7A—PROPOSED 2009 AND 2010 APPORTIONMENT OF PROHIBITED SPECIES CATCH ALLOWANCES TO NON–TRAWL GEAR, THE CDQ PROGRAM, AMENDMENT 80, AND THE BSAI TRAWL LIMITED ACCESS SECTORS

PSC species	Total non-trawl PSC	Non-trawl PSC remaining after CDQ PSQ[1]	Total trawl PSC	Trawl PSC remaining after CDQ PSQ[1]	CDQ PSQ reserve[1]	Amendment 80 sector		BSAI trawl limited access fishery
						2009	2010	
Halibut mortality (mt) BSAI	900	832	3,675	3,400 mt in 2009 and 3,282 mt in 2010	343 in 2009 and 393 in 2010	2,475	2,425	875
Herring (mt) BSAI	n/a	n/a	1,726	n/a	n/a	n/a	n/a	n/a
Red king crab (animals) Zone 1[1]	n/a	n/a	197,000	175,921	21,079	104,427	98,920	53,797
C. opilio (animals) COBLZ[2]	n/a	n/a	4,350,000	3,884,550	465,450	2,267,412	2,148,156	1,248,494

TABLE 7A—PROPOSED 2009 AND 2010 APPORTIONMENT OF PROHIBITED SPECIES CATCH ALLOWANCES TO NON–TRAWL GEAR, THE CDQ PROGRAM, AMENDMENT 80, AND THE BSAI TRAWL LIMITED ACCESS SECTORS—Continued

PSC species	Total non-trawl PSC	Non-trawl PSC remaining after CDQ PSQ[1]	Total trawl PSC	Trawl PSC remaining after CDQ PSQ[1]	CDQ PSQ reserve[1]	Amendment 80 sector		BSAI trawl limited access fishery
						2009	2010	
C. bairdi crab (animals) Zone 1[2]	n/a	n/a	980,000	875,140	104,860	437,658	414,641	411,228
C. bairdi crab (animals) Zone 2[2]	n/a	n/a	2,970,000	2,652,210	317,790	745,536	706,284	1,241,500

[1]Section 679.21(e)(3)(i)(A)(*2*) allocates 276 mt in 2009 and 326 mt in 2010 of the trawl halibut mortality limit and section 679.21(e)(4)(i)(A) allocates 7.5 percent, or 67 mt, of the non-trawl halibut mortality limit as the PSQ reserve for use by the groundfish CDQ program. The PSQ reserve for crab species is 10.7 percent of each crab PSC limit.
[2]Refer to 50 CFR 679.2 for definitions of zones.

TABLE 7B—PROPOSED 2009 AND 2010 HERRING AND RED KING CRAB SAVINGS SUBAREA PROHIBITED SPECIES CATCH ALLOWANCES FOR ALL TRAWL SECTORS

Fishery Categories	Herring (mt) BSAI	Red king crab (animals) Zone 1
Yellowfin sole	148	n/a
Rock sole/ flathead sole/ other flatfish[1]	26	n/a
Turbot/ arrowtooth/ sablefish[2]	12	n/a
Rockfish	9	n/a
Pacific cod	26	n/a

TABLE 7B—PROPOSED 2009 AND 2010 HERRING AND RED KING CRAB SAVINGS SUBAREA PROHIBITED SPECIES CATCH ALLOWANCES FOR ALL TRAWL SECTORS—Continued

Fishery Categories	Herring (mt) BSAI	Red king crab (animals) Zone 1
Midwater trawl pollock	1,318	n/a
Pollock/Atka mackerel/ other species[3]	187	n/a
Red king crab savings subarea	n/a	n/a
Non-pelagic trawl gear[4]	n/a	49,250

TABLE 7B—PROPOSED 2009 AND 2010 HERRING AND RED KING CRAB SAVINGS SUBAREA PROHIBITED SPECIES CATCH ALLOWANCES FOR ALL TRAWL SECTORS—Continued

Fishery Categories	Herring (mt) BSAI	Red king crab (animals) Zone 1
Total trawl PSC	1,726	197,000

[1]''Other flatfish'' for PSC monitoring includes all flatfish species, except for halibut (a prohibited species), flathead sole, Greenland turbot, rock sole, yellowfin sole, and arrowtooth flounder.
[2]Greenland turbot, arrowtooth flounder, and sablefish fishery category.
[2]Greenland turbot, arrowtooth flounder, and sablefish fishery category.
[3]Non-pollock, Atka mackerel, and ''other species'' fishery category.
[4]In October 2008 the Council recommended that the red king crab bycatch limit for non-pelagic trawl fisheries within the RKCSS be limited to 25 percent of the red king crab PSC allowance (see § 679.21(e)(3)(ii)(B)(*2*)).

TABLE 7c–PROPOSED 2009 AND 2010 PROHIBITED SPECIES BYCATCH ALLOWANCES FOR THE BSAI TRAWL LIMITED ACCESS SECTOR AND NON-TRAWL FISHERIES

BSAI trawl limited access fisheries	Prohibited species and area[1]					
	Halibut mortality (mt) BSAI		Red king crab (animals) Zone 1	C. opilio (animals) COBLZ	C. bairdi (animals)	
					Zone 1	Zone 2
Yellowfin sole	162		47,397	1,176,494	346,228	1,185,500
Rock sole/flathead sole/other flatfish[2]	0		0	0	0	0
Turbot/arrowtooth/sablefish[3]	0		0	0	0	0
Rockfish	3		0	2,000	0	1,000
Pacific cod	585		6,000	50,000	60,000	50,000
Pollock/Atka mackerel/other species	125		400	20,000	5,000	5,000
Total BSAI trawl limited access PSC	875		53,797	1,248,494	411,228	1,241,500
Non-trawl fisheries	Catcher processor	Catcher vessel				
Pacific cod-Total	760	15				
January 1-June 10	314	10				
June 10-August 15	0	3				
August 15-December 31	446	2				
Other non-trawl-Total	58					
May 1-December 31	58					
Groundfish pot and jig	exempt					
Sablefish hook-and-line	exempt					
Total non trawl PSC	833					

[1] Refer to § 679.2 for definitions of areas.

[2] "Other flatfish" for PSC monitoring includes all flatfish species, except for halibut (a prohibited species), flathead sole, Greenland turbot, rock sole, yellowfin sole, and arrowtooth flounder.

[3] Greenland turbot, arrowtooth flounder, and sablefish fishery category.

TABLE 7D—PROPOSED 2009 PROHIBITED SPECIES BYCATCH ALLOWANCE FOR THE BSAI AMENDMENT 80 COOPERATIVES

Year	Prohibited species and zones[1]				
	Halibut mortality (mt) BSAI	Red king crab (animals) Zone 1	*C. opilio* (animals) COBLZ	*C. bairdi* (animals)	
				Zone 1	Zone 2
2009	1,793	74,345	1,544,825	321,922	548,443

[1] Refer to § 679.2 for definitions of zones.

TABLE 7E—PROPOSED 2009 PROHIBITED SPECIES BYCATCH ALLOWANCES FOR THE BSAI AMENDMENT 80 LIMITED ACCESS FISHERIES

Amendment 80 trawl limited access fisheries	Prohibited species and zone[1]				
	Halibut mortality (mt) BSAI	Red king crab (animals) Zone 1	*C. opilio* (animals) COBLZ	*C. bairdi* (animals)	
				Zone 1	Zone 2
Yellowfin sole	359	5,867	632,306	60,832	149,709
Jan 20 - Jul 1	212	5,674	622,726	56,349	120,793
Jul 1 - Dec 31	148	193	9,580	4,483	28,916
Rock sole/other flat/flathead sole[2]	222	24,039	89,476	54,593	46,523
Jan 20 - Apr 1	178	23,687	86,449	48,162	40,637
Apr 1 - Jul 1	20	176	1,590	3,371	2,943
July 1 - Dec 31	24	176	1,437	3,060	2,943

TABLE 7E—PROPOSED 2009 PROHIBITED SPECIES BYCATCH ALLOWANCES FOR THE BSAI AMENDMENT 80 LIMITED ACCESS FISHERIES—Continued

Amendment 80 trawl limited access fisheries	Prohibited species and zone[1]				
	Halibut mortality (mt) BSAI	Red king crab (animals) Zone 1	*C. opilio* (animals) COBLZ	*C. bairdi* (animals)	
				Zone 1	Zone 2
Turbot/arrowtooth/sablefish[3]	n/a	n/a	n/a	n/a	n/a
Rockfish	50	n/a	n/a	n/a	n/a
Pacific cod	1	176	805	311	861
Pollock/Atka mackerel/other[4]	50	0	0	0	0
Total Amendment 80 trawl limited access PSC	682	30,082	722,587	115,736	197,093

[1]Refer to § 679.2 for definitions of zones.
[2]"Other flatfish" for PSC monitoring includes all flatfish species, except for halibut (a prohibited species), flathead sole, Greenland turbot, rock sole, yellowfin sole, and arrowtooth flounder.
[3]Greenland turbot, arrowtooth flounder, and sablefish fishery category.
[4]Pollock other than pelagic trawl pollock, Atka mackerel, and "other species" fishery category.

Halibut Discard Mortality Rates

To monitor halibut bycatch mortality allowances and apportionments, the Regional Administrator uses observed halibut bycatch rates, discard mortality rates (DMR), and estimates of groundfish catch to project when a fishery's halibut bycatch mortality allowance or seasonal apportionment is reached. The DMRs are based on the best information available, including information contained in the annual SAFE report.

NMFS proposes the Council's recommendation that the halibut DMRs developed and recommended by the International Pacific Halibut Commission (IPHC) for the 2009 and 2010 BSAI groundfish fisheries be used for monitoring the proposed 2009 and 2010 halibut bycatch allowances (see Tables 7a–e). The DMRs proposed for the 2009 and 2010 BSAI non–CDQ fisheries are the same as those used in 2008. The IPHC developed the DMRs for the 2009 and 2010 BSAI non–CDQ groundfish fisheries using the 10-year mean DMRs for those fisheries. The IPHC changed the DMRs for the 2009 and 2010 BSAI CDQ groundfish fisheries using the 1998 to 2006 DMRs for those fisheries. The IPHC will analyze observer data annually and recommend changes to the DMRs when a fishery DMR shows large variation from the mean. A copy of the document justifying these DMRs is available from the Council (see **ADDRESSES**) and the DMRs are discussed in Appendix A of the final 2007 SAFE report dated November 2007. Table 8 lists the proposed 2009 and 2010 DMRs.

TABLE 8—PROPOSED 2009 AND 2010 ASSUMED PACIFIC HALIBUT DISCARD MORTALITY RATES FOR THE BSAI

Gear	Fishery	Halibut discard mortality rate (percent)
Non-CDQ hook-and-line	Greenland turbot	13
	Other species	11
	Pacific cod	11
	Rockfish	17
Non-CDQ trawl	Arrowtooth flounder	75
	Atka mackerel	76
	Flathead sole	70
	Greenland turbot	70
	Non-pelagic pollock	74
	Pelagic pollock	88
	Other flatfish	74
	Other species	70
	Pacific cod	70
	Rockfish	76
	Rock sole	80
	Sablefish	75
	Yellowfin sole	80
Non-CDQ pot	Other species	7
	Pacific cod	7
CDQ trawl	Atka mackerel	85
	Flathead sole	70
	Non-pelagic pollock	86
	Pelagic pollock	90

TABLE 8—PROPOSED 2009 AND 2010 ASSUMED PACIFIC HALIBUT DISCARD MORTALITY RATES FOR THE BSAI—Continued

Gear	Fishery	Halibut discard mortality rate (percent)
	Rockfish	82
	Rock sole	86
	Yellowfin sole	86
CDQ hook-and-line	Greenland turbot	4
	Pacific cod	10
CDQ pot	Pacific cod	7
	Sablefish	34

Central Gulf of Alaska Rockfish Pilot Program (Rockfish Program)

On June 6, 2005, the Council adopted the Rockfish Program to meet the requirements of Section 802 of the Consolidated Appropriations Act of 2004 (Public Law 108–199). The basis for the BSAI fishing prohibitions and the catcher vessel BSAI Pacific cod sideboard limits of the Rockfish program are discussed in detail in the final rule for Amendment 68 to the FMP for groundfish of the GOA (71 FR 67210, November 20, 2006). Pursuant to § 679.82(d)(6)(i), the catcher vessel BSAI Pacific cod sideboard limit is 0.0 mt and in the final 2009 and 2010 harvest specifications this would effectively close directed fishing for BSAI Pacific cod in July for catcher vessels under the Rockfish Program sideboard limitations.

Listed AFA Catcher/Processor Sideboard Limits

Pursuant to § 679.64(a), the Regional Administrator is responsible for restricting the ability of listed AFA catcher/processors to engage in directed fishing for groundfish species other than pollock to protect participants in other groundfish fisheries from adverse effects resulting from the AFA and from fishery cooperatives in the directed pollock fishery. Table 9 lists the proposed 2009 and 2010 catcher/processor sideboard limits. The basis for these proposed sideboard limits is described in detail in the final rules implementing the major provisions of the AFA (67 FR 79692, December 30, 2002) and Amendment 80 (72 FR 52668, September 14, 2007).

All harvests of groundfish sideboard species by listed AFA catcher/processors, whether as targeted catch or incidental catch, will be deducted from the proposed sideboard limits in Table 9. However, groundfish sideboard species that are delivered to listed AFA catcher/processors by catcher vessels will not be deducted from the proposed 2009 and 2010 sideboard limits for the listed AFA catcher/processors.

TABLE 9—PROPOSED 2009 AND 2010 BSAI GROUNDFISH SIDEBOARD LIMITS FOR LISTED AMERICAN FISHERIES ACT CATCHER/PROCESSORS (C/P)

[Amounts are in metric tons]

Target species	Area	1995 - 1997			2009 and 2010 ITAC available to all trawl C/Ps[1]	2009 and 2010 AFA C/P sideboard limit
		Retained catch	Total catch	Ratio of retained catch to total catch		
Sablefish trawl	BS	8	497	0.016	1,109	18
	AI	0	145	0.000	474	0
Atka mackerel	*Central AI*					
	A season[2]	n/a	n/a	0.115	8,484	976
	HLA limit[3]	n/a	n/a	n/a	5,090	585
	B season[2]	n/a	n/a	0.115	8,484	976
	HLA limit[3]	n/a	n/a	n/a	5,090	585
	Western AI					
	A season[2]	n/a	n/a	0.200	5,894	1,179
	HLA limit[3]	n/a	n/a	n/a	3,536	707
	B season[2]	n/a	n/a	0.200	5,894	1,179
	HLA limit[3]	n/a	n/a	n/a	3,536	707
Yellowfin sole[4]	BSAI	100,192	435,788	0.230	200,925	n/a
Rock sole	BSAI	6,317	169,362	0.037	66,975	2,478
Greenland turbot	BS	121	17,305	0.007	1,488	10
	AI	23	4,987	0.005	672	3
Arrowtooth flounder	BSAI	76	33,987	0.002	63,750	128
Flathead sole	BSAI	1,925	52,755	0.036	44,650	1,607

TABLE 9—PROPOSED 2009 AND 2010 BSAI GROUNDFISH SIDEBOARD LIMITS FOR LISTED AMERICAN FISHERIES ACT CATCHER/PROCESSORS (C/P)—Continued

[Amounts are in metric tons]

Target species	Area	1995 - 1997			2009 and 2010 ITAC available to all trawl C/Ps[1]	2009 and 2010 AFA C/P sideboard limit
		Retained catch	Total catch	Ratio of retained catch to total catch		
Alaska plaice	BSAI	14	9,438	0.001	42,500	43
Other flatfish	BSAI	3,058	52,298	0.058	18,360	1,065
Pacific ocean perch	BS	12	4,879	0.002	3,485	7
	Eastern AI	125	6,179	0.020	4,295	86
	Central AI	3	5,698	0.001	4,376	4
	Western AI	54	13,598	0.004	6,689	27
Northern rockfish	BSAI	91	13,040	0.007	6,911	48
Shortraker rockfish	BSAI	50	2,811	0.018	360	6
Rougheye rockfish	BSAI	50	2,811	0.018	172	3
Other rockfish	BS	18	621	0.029	352	10
	AI	22	806	0.027	471	13
Squid	BSAI	73	3,328	0.022	1,675	37
Other species	BSAI	553	68,672	0.008	42,500	340

[1]Aleutians Islands Pacific ocean perch, Atka mackerel, flathead sole, rock sole, and yellowfin sole are multiplied by the remainder of the TAC of that species after the subtraction of the CDQ reserve under § 679.20(b)(1)(ii)(C).

[2]The seasonal apportionment of Atka mackerel in the open access fishery is 50 percent in the A season and 50 percent in the B season. Listed AFA catcher/processors are limited to harvesting no more than zero in the Eastern Aleutian District and Bering Sea subarea, 20 percent of the annual ITAC specified for the Western Aleutian District, and 11.5 percent of the annual ITAC specified for the Central Aleutian District.

[3]Harvest Limit Area (HLA) limit refers to the amount of each seasonal allowance that is available for fishing inside the HLA (see § 679.2). In 2009 and 2010, 60 percent of each seasonal allowance is available for fishing inside the HLA in the Western and Central Aleutian Districts.

[4]Section 679.64(a)(1)(v) exempts AFA catcher/processors from a yellowfin sole sideboard limit because the 2009 and 2010 aggregate ITAC of yellowfin sole assigned to the Amendment 80 sector and BSAI trawl limited access sector (198,9250 mt) is greater than 125,000 mt.

Section 679.64(a)(2) and Tables 40 and 41 to part 679 establish a formula for PSC sideboard limits for listed AFA catcher/processors. The basis for these sideboard limits is described in detail in the final rules implementing the major provisions of the AFA (67 FR 79692, December 30, 2002) and Amendment 80 (72 FR 52668, September 14, 2007).

PSC species listed in Table 10 that are caught by listed AFA catcher/processors participating in any groundfish fishery other than pollock will accrue against the proposed 2009 and 2010 PSC sideboard limits for the listed AFA catcher/processors. Section 679.21(e)(3)(v) authorizes NMFS to close directed fishing for groundfish other than pollock for listed AFA catcher/processors once a proposed 2009 or 2010 PSC sideboard limit listed in Table 10 is reached.

Crab or halibut PSC caught by listed AFA catcher/processors while fishing for pollock will accrue against the bycatch allowances annually specified for either the midwater pollock or the pollock/Atka mackerel/''other species'' fishery categories according to regulations at § 679.21(e)(3)(iv).

TABLE 10—PROPOSED 2009 AND 2010 BSAI PROHIBITED SPECIES SIDEBOARD LIMITS FOR AMERICAN FISHERIES ACT LISTED CATCHER/PROCESSOR

PSC species	Ratio of PSC catch to total PSC	Proposed 2009 and 2010 PSC available to trawl vessels after subtraction of PSQ[1]	Proposed 2009 and 2010 C/P sideboard limit[1]
Halibut mortality	n/a	n/a	286
Red king crab Zone 1[2]	0.007	175,921	1,231
C. opilio (COBLZ)[2]	0.153	3,884,550	594,336
C. bairdi	n/a	n/a	n/a
Zone 1[2]	0.140	875,140	122,520
Zone 2[2]	0.050	2,652,210	132,611

[1]Halibut amounts are in metric tons of halibut mortality. Crab amounts are in numbers of animals.

[2]Refer to 50 CFR 679.2 for definitions of zones.

AFA Catcher Vessel Sideboard Limits

Pursuant to § 679.64(b), the Regional Administrator is responsible for restricting the ability of AFA catcher vessels to engage in directed fishing for groundfish species other than pollock to protect participants in other groundfish fisheries from adverse effects resulting from the AFA and from fishery cooperatives in the directed pollock fishery. Section 679.64(b) establishes formulas for setting AFA catcher vessel groundfish and PSC sideboard limits for the BSAI. The basis for these sideboard limits is described in detail in the final rules implementing the major provisions of the AFA (67 FR 79692, December 30, 2002) and Amendment 80 (72 FR 52668, September 14, 2007). Tables 11 and 12 list the proposed 2009 and 2010 AFA catcher vessel sideboard limits.

All catch of groundfish sideboard species made by non–exempt AFA catcher vessels, whether as targeted catch or as incidental catch, will be deducted from the proposed 2009 and 2010 sideboard limits listed in Table 11.

TABLE 11—PROPOSED 2009 AND 2010 BSAI GROUNDFISH SIDEBOARD LIMITS FOR AMERICAN FISHERIES ACT CATCHER VESSELS (CV)

[Amounts are in metric tons]

Species	Fishery by area/season/sector/gear	Ratio of 1995-1997 AFA CV catch to 1995-1997 TAC	2009 and 2010 initial TAC[1]	2009 and 2010 AFA catcher vessel sideboard limits
Pacific cod	BSAI			
	Jig gear	0.0000	2,134	0
	Hook-and-line CV			
	Jan 1 - Jun 10	0.0006	155	0
	Jun 10 - Dec 31	0.0006	149	0
	Pot gear CV			
	Jan 1 - Jun 10	0.0006	6,496	4
	Sept 1 - Dec 31	0.0006	6,241	4
	CV < 60 ft LOA using hook-and-line or pot gear	0.0006	3,033	2
	Trawl gear CV			
	Jan 20 - Apr 1	0.8609	24,932	21,464
	Apr 1 - Jun 10	0.8609	3,706	3,190
	Jun 10 - Nov 1	0.8609	5,054	4,351
Sablefish	BS trawl gear	0.0906	1,109	100
	AI trawl gear	0.0645	474	31
Atka mackerel	Eastern AI/BS			
	Jan 1 - Apr 15	0.0032	6,831	22
	Sept 1 - Nov 1	0.0032	6,832	22
	Central AI			
	Jan - Apr 15	0.0001	8,484	1
	HLA limit	0.0001	5,090	1
	Sept 1 - Nov 1	0.0001	8,484	1
	HLA limit	0.0001	5,090	1
	Western AI			
	Jan - Apr 15	0.0000	5,894	0
	HLA limit	n/a	3,536	0
	Sept 1 - Nov 1	0.0000	5,894	0
	HLA limit	n/a	3,536	0
Yellowfin sole[2]	BSAI	0.0647	200,925	n/a
Rock sole	BSAI	0.0341	66,975	2,284
Greenland turbot	BS	0.0645	1,488	96
	AI	0.0205	672	14
Arrowtooth flounder	BSAI	0.0690	63,750	4,399
Alaska plaice	BSAI	0.0441	42,500	1,874
Other flatfish	BSAI	0.0441	18,360	810
Pacific ocean perch	BS	0.1000	3,485	349
	Eastern AI	0.0077	4,295	33
	Central AI	0.0025	4,376	11
	Western AI	0.0000	6,689	0

TABLE 11—PROPOSED 2009 AND 2010 BSAI GROUNDFISH SIDEBOARD LIMITS FOR AMERICAN FISHERIES ACT CATCHER VESSELS (CV)—Continued

[Amounts are in metric tons]

Species	Fishery by area/season/sector/gear	Ratio of 1995-1997 AFA CV catch to 1995-1997 TAC	2009 and 2010 initial TAC[1]	2009 and 2010 AFA catcher vessel sideboard limits
Northern rockfish	BSAI	0.0084	6,911	58
Shortraker rockfish	BSAI	0.0037	360	1
Rougheye rockfish	BSAI	0.0037	172	1
Other rockfish	BS AI	0.0048 0.0095	352 471	2 4
Squid	BSAI	0.3827	1,675	641
Other species	BSAI	0.0541	42,500	2,299
Flathead sole	BS trawl gear	0.0505	44,650	2,255

[1]Aleutians Islands Pacific ocean perch, Atka mackerel, flathead sole, rock sole, and yellowfin sole are multiplied by the remainder of the TAC of that species after the subtraction of the CDQ reserve under § 679.20(b)(1)(ii)(C).

[2]Section 679.64(b)(6) exempts AFA catcher vessels from a yellowfin sole sideboard limit because the 2009 and 2010 aggregate ITAC of yellowfin sole assigned to the Amendment 80 sector and BSAI trawl limited access sector (198,925 mt) is greater than 125,000 mt.

Halibut and crab PSC listed in Table 12 that are caught by AFA catcher vessels participating in any groundfish fishery other than pollock will accrue against the proposed 2009 and 2010 PSC sideboard limits for the AFA catcher vessels. Sections 679.21(d)(8) and (e)(3)(v) authorize NMFS to close directed fishing for groundfish other than pollock for AFA catcher vessels once a proposed 2009 and 2010 PSC sideboard limit listed in Table 12 is reached. The PSC caught by AFA catcher vessels while fishing for pollock in the BSAI will accrue against the bycatch allowances annually specified for either the midwater pollock or the pollock/Atka mackerel/''other species'' fishery categories under regulations at § 679.21(e)(3)(iv).

TABLE 12—PROPOSED 2009 AND 2010 AMERICAN FISHERIES ACT CATCHER VESSEL PROHIBITED SPECIES CATCH SIDEBOARD LIMITS FOR THE BSAI

[Amounts are in metric tons]

PSC species	Target fishery category[2]	AFA catcher vessel PSC sideboard limit ratio	Proposed 2009 and 2010 PSC limit after subtraction of PSQ reserves[1]	Proposed 2009 and 2010 AFA catcher vessel PSC sideboard limit[1]
Halibut	Pacific cod trawl	n/a	n/a	887
	Pacific cod hook-and-line or pot	n/a	n/a	2
	Yellowfin sole total	n/a	n/a	101
	Rock sole/flathead sole/other flatfish3	n/a	n/a	228
	Turbot/arrowtooth/sablefish	n/a	n/a	0
	Rockfish (July 1 - December 31)	n/a	n/a	2
	Pollock/Atka mackerel/other species	n/a	n/a	5
Red king crab Zone 1[4]	n/a	0.299	175,921	52,600
C. opilio COBLZ[4]	n/a	0.168	3,884,550	652,604
C. bairdi Zone 1[4]	n/a	0.330	875,140	288,796
C. bairdi Zone 2[4]	n/a	0.186	2,652,210	493,311

[1]Halibut amounts are in metric tons of halibut mortality. Crab amounts are in numbers of animals.

[2]Target fishery categories are defined in regulation at § 679.21(e)(3)(iv).

[3]''Other flatfish'' for PSC monitoring includes all flatfish species, except for halibut (a prohibited species), flathead sole, Greenland turbot, rock sole, yellowfin sole, and arrowtooth flounder.

[4]Refer to 50 CFR 679.2 for definitions of areas.

Classification

NMFS has determined that the proposed harvest specifications are consistent with the FMP and preliminarily determined that the proposed harvest specifications are consistent with the Magnuson–Stevens Act and other applicable laws.

This action is authorized under 50 CFR 679.20 and is exempt from review under Executive Order 12866.

NMFS prepared a Final EIS for this action and made it available to the public on January 12, 2007 (72 FR 1512). On February 13, 2007, NMFS issued the Record of Decision (ROD) for the Final EIS. Copies of the Final EIS and ROD for this action are available from NMFS (see **ADDRESSES**). The Final EIS analyzes the environmental consequences of the proposed action and its alternatives on resources in the action area. The Final EIS found no significant environmental consequences from the proposed action or its alternatives.

NMFS also prepared an Initial Regulatory Flexibility Analysis (IRFA) as required by Section 603 of the Regulatory Flexibility Act. The IRFA evaluated the impacts on small entities of alternative harvest strategies for the groundfish fisheries in the Exclusive Economic Zone (EEZ) off of Alaska. NMFS published a notice of the availability of the IRFA and its summary in the classification section of the proposed harvest specifications for the groundfish fisheries in the BSAI in the **Federal Register** on December 15, 2006 (71 FR 75460). The comment period on the BSAI proposed harvest specifications and IRFA ended on January 16, 2007. NMFS did not receive any comments on the IRFA.

Each year, NMFS promulgates a rule establishing the harvest specifications pursuant to the adopted harvest strategy. While the harvest specification numbers may change from year to year, the harvest strategy for establishing those numbers does not change. Therefore, the impacts discussed in the IRFA are essentially the same. NMFS considers the annual rulemakings establishing the harvest specification numbers to be a series of closely related rules stemming from the harvest strategy and representing one rule for purposes of the Regulatory Flexibility Act (5 U.S.C. 605(c)).

A copy of the IRFA is available from NMFS (see **ADDRESSES**), and a summary is below.

The action analyzed in the IRFA is the adoption of a harvest strategy to govern the catch of groundfish in the BSAI. The preferred alternative is the status quo harvest strategy in which TACs fall within the range of ABCs recommended by the Council's harvest specification process and TACs recommended by the Council. This action is taken in accordance with the FMP prepared by the Council pursuant to the Magnuson–Stevens Act.

The directly regulated small entities include approximately 810 small catcher vessels, fewer than 20 small catcher/processors, and six CDQ groups. The entities directly regulated by this action are those that harvest groundfish in the exclusive economic zone of the BSAI and in parallel fisheries within State of Alaska waters. These include entities operating catcher vessels and catcher/processor vessels within the action area, and entities receiving direct allocations of groundfish. Catcher vessels and catcher/processors were considered to be small entities if their annual gross receipts from all economic activities, including the revenue of their affiliated operations, totaled $4 million per year or less. Data from 2006 were the most recent available to determine the number of small entities.

Estimates of first wholesale gross revenues for the BSAI non–CDQ and CDQ sectors were used as indices of the potential impacts of the alternative harvest strategies on small entities. Revenues were projected to decline from 2006 levels in 2007 and 2008 under the preferred alternative due to declines in ABCs for economically key groundfish species.

The preferred alternative (Alternative 2) was compared to four other alternatives. These included Alternative 1, which would have set TACs to generate fishing rates equal to the maximum permissible ABC (if the full TAC were harvested), unless the sum of TACs exceeded the BSAI optimum yield, in which case TACs would have been limited to the optimum yield. Alternative 3 would have set TACs to produce fishing rates equal to the most recent five-year average fishing rates. Alternative 4 would have set TACs to equal the lower limit of the BSAI optimum yield range. Alternative 5 would have set TACs equal to zero. Alternative 5 is the ''no action'' alternative.

Alternatives 3, 4, and 5 produced smaller first wholesale revenue indices for both non–CDQ and CDQ sectors than Alternative 2. Alternative 1 revenues were the same as Alternative 2 revenues in the BSAI for both sectors. Moreover, higher Alternative 1 TACs are associated with maximum permissible ABCs, while Alternative 2 TACs are associated with the ABCs that have been recommended to the Council by the Plan Team and the SSC, and more fully consider other potential biological issues. For these reasons, Alternative 2 is the preferred alternative.

This action does not modify recordkeeping or reporting requirements, or duplicate, overlap, or conflict with any Federal rules.

Adverse impacts on marine mammals resulting from fishing activities conducted under these harvest specifications are discussed in the Final EIS (see **ADDRESSES**).

Authority: 16 U.S.C. 773 *et seq.*; 16 U.S.C. 1540(f); 16 U.S.C. 1801 *et seq.*; 16 U.S.C. 3631 *et seq.*; Pub. L. 105–277; Pub. L. 106–31; Pub. L. 106–554; Pub. L. 108–199; Pub. L. 108–447; Pub. L. 109–241; Pub. L. 109–479.

Dated: December 2, 2008.

Samuel D. Rauch III,

Deputy Assistant Administrator for Regulatory Programs, National Marine Fisheries Service.

[FR Doc. E8–29216 Filed 12–9–08; 8:45 am]

BILLING CODE 3510–22–S

Notices

Federal Register
Vol. 73, No. 238
Wednesday, December 10, 2008

This section of the FEDERAL REGISTER contains documents other than rules or proposed rules that are applicable to the public. Notices of hearings and investigations, committee meetings, agency decisions and rulings, delegations of authority, filing of petitions and applications and agency statements of organization and functions are examples of documents appearing in this section.

BROADCASTING BOARD OF GOVERNORS

Sunshine Act Meeting; Canceled

DATE AND TIME: Tuesday, December 9, 2008.1 p.m.–2:15 p.m.

PLACE: Cohen Building, Room 3321, 330 Independence Ave., SW., Washington, DC 20237.

CLOSED MEETING: The members of the Broadcasting Board of Governors (BBG) will meet in closed session to review and discuss a number of issues relating to U.S. Government-funded non-military international broadcasting. They will address internal procedural, budgetary, and personnel issues, as well as sensitive foreign policy issues relating to potential options in the U.S. international broadcasting field. This meeting is closed because if open it likely would either disclose matters that would be properly classified to be kept secret in the interest of foreign policy under the appropriate executive order (5 U.S.C. 552b.(c)(1)) or would disclose information the premature disclosure of which would be likely to significantly frustrate implementation of a proposed agency action. (5 U.S.C. 552b.(c)(9)(B)) In addition, part of the discussion will relate solely to the internal personnel and organizational issues of the BBG or the International Broadcasting Bureau. (5 U.S.C. 552b.(c)(2) and (6))

CONTACT PERSON FOR MORE INFORMATION: Persons interested in obtaining more information should contact Timi Nickerson Kenealy at (202) 203–4545.

Dated: December 8, 2008.

Timi Nickerson Kenealy,

Acting Legal Counsel.

[FR Doc. E8–29412 Filed 12–8–08; 4:15 pm]

BILLING CODE 8610–01–P

DEPARTMENT OF COMMERCE

Economic Development Administration

Notice of Petitions by Firms for Determination of Eligibility To Apply for Trade Adjustment Assistance

AGENCY: Economic Development Administration, Department of Commerce.

ACTION: Notice and opportunity for public comment.

Pursuant to Section 251 of the Trade Act of 1974 (19 U.S.C. 2341 *et seq.*), the Economic Development Administration (EDA) has received petitions for certification of eligibility to apply for Trade Adjustment Assistance from the firms listed below. EDA has initiated separate investigations to determine whether increased imports into the United States of articles like or directly competitive with those produced by each firm contributed importantly to the total or partial separation of the firm's workers, or threat thereof, and to a decrease in sales or production of each petitioning firm.

LIST OF PETITIONS RECEIVED BY EDA FOR CERTIFICATION OF ELIGIBILITY TO APPLY FOR TRADE ADJUSTMENT

[11/1/2008 through 12/1/2008]

Firm	Address	Date accepted for filing	Products
Von Ruden Manufacturing, Inc	1008 First Street N.E., Buffalo, MN 55313–1755.	11/25/2008	Precision cast hydraulic motors and power train components, gear boxes, and custom fluid power component parts.
Milbank Manufacturing Co	4801 Deramus Avenue, Kansas City, MO 64120.	12/1/2008	Electrical meter sockets, enclosures and pedestals.
Kincaid Furniture Company, Inc	240 Pleasant Hill Road, Hudson, NC 28638.	11/3/2008	Solid wood household furniture.
Dewey Ironworks LLC	1220 Industrial Parkway, Dewey, OK 74005.	11/4/2008	Linked hydraulic hoists.
Sigma Equipment Corporation	39 Westmoreland Ave., White Plains, NY 10606.	11/24/2008	Machinery for chemical process industries, specifically for bar soap and powder soap production.
Vermillion, Inc	4754 S. Pallisade Street, Wichita, KS 67217–4926.	12/1/2008	Bulk cable and wiring harnesses.

Any party having a substantial interest in these proceedings may request a public hearing on the matter. A written request for a hearing must be submitted to the Office of Performance Evaluation, Room 7009, Economic Development Administration, U.S. Department of Commerce, Washington, DC 20230, no later than ten (10) calendar days following publication of this notice.

Please follow the procedures set forth in Section 315.9 of EDA's final rule (71 FR 56704) for procedures for requesting a public hearing. The Catalog of Federal Domestic Assistance official program number and title of the program under which these petitions are submitted is 11.313, Trade Adjustment Assistance.

Dated: December 4, 2008.

William P. Kittredge,

Program Officer for TAA.

[FR Doc. E8–29166 Filed 12–9–08; 8:45 am]

BILLING CODE 3510–24–P

DEPARTMENT OF COMMERCE

International Trade Administration

A–428–801

Ball Bearings and Parts Thereof from Germany: Final Results of Antidumping Duty Changed–Circumstances Review

AGENCY: Import Administration, International Trade Administration, Department of Commerce.

SUMMARY: On May 7, 2008, we published the preliminary results of changed–circumstances review of the antidumping duty order on ball bearings and parts thereof from Germany. See *Preliminary Results of Antidumping Duty Changed–Circumstances Review*, 73 FR 25663 (May 7, 2008) (Preliminary Results). Interested parties were invited to comment on these preliminary results. After reviewing parties' comments, we have affirmed the preliminary results and find that myonic GmbH is the successor–in-interest to Miniaturkugëllager Gesellschaft mit beschrankter Haftung (MKL).

EFFECTIVE DATE: December 10, 2008.

FOR FURTHER INFORMATION CONTACT: David Dirstine or Richard Rimlinger, AD/CVD Operations, Office 5, Import Administration, International Trade Administration, U.S. Department of Commerce, 14th Street and Constitution Avenue, NW, Washington, DC 20230; telephone (202) 482–4033 and (202) 482–4477, respectively.

SUPPLEMENTARY INFORMATION:

Background

On May 7, 2008, the Department published a notice of preliminary results of its changed–circumstances review of the antidumping duty order on ball bearings and parts thereof from Germany in which it preliminarily determined that myonic GmbH is the successor–in-interest to MKL and should be accorded the same treatment previously accorded MKL with regard to the antidumping duty order on ball bearings and parts thereof from Germany. See *Preliminary Results*, 73 FR 25663.

On May 21, 2008, the petitioner, the Timken Company (Timken), submitted a case brief. Myonic submitted a rebuttal brief on June 17, 2008.

Scope of the Order

The products covered by this order are ball bearings and parts thereof. These products include all bearings that employ balls as the rolling element. Imports of these products are classified under the following categories: antifriction balls, ball bearings with integral shafts, ball bearings (including radial ball bearings) and parts thereof, and housed or mounted ball bearing units and parts thereof.

Imports of these products are classified under the following *Harmonized Tariff Schedules of the United States* (HTSUS) subheadings: 3926.90.45, 4016.93.00, 4016.93.10, 4016.93.50, 6909.19.5010, 8431.20.00, 8431.39.0010, 8482.10.10, 8482.10.50, 8482.80.00, 8482.91.00, 8482.99.05, 8482.99.2580, 8482.99.35, 8482.99.6595, 8483.20.40, 8483.20.80, 8483.50.8040, 8483.50.90, 8483.90.20, 8483.90.30, 8483.90.70, 8708.50.50, 8708.60.50, 8708.60.80, 8708.70.6060, 8708.70.8050, 8708.93.30, 8708.93.5000, 8708.93.6000, 8708.93.75, 8708.99.06, 8708.99.31, 8708.99.4960, 8708.99.50, 8708.99.5800, 8708.99.8080, 8803.10.00, 8803.20.00, 8803.30.00, 8803.90.30, and 8803.90.90.

As a result of recent changes to the HTS, effective February 2, 2007, the subject merchandise is also classifiable under the following additional HTS item numbers: 8708.30.5090, 8708.40.7500, 8708.50.7900, 8708.50.8900, 8708.50.9150, 8708.50.9900, 8708.80.6590, 8708.94.75, 8708.95.2000, 8708.99.5500, 8708.99.68, and 8708.99.8180.

Analysis of the Comments Received

All issues raised in the case and rebuttal briefs by parties to this changed–circumstances review are addressed in the ''Issues and Decision Memorandum'' (Decision Memo) from Stephen J. Claeys, Deputy Assistant Secretary, to David M. Spooner, Assistant Secretary, dated December 1, 2008, which is hereby adopted by this notice. A list of the issues which parties have raised and to which we have responded is in the Decision Memo and attached to this notice as an Appendix. The Decision Memo, which is a public document, is on file in the Central Records Unit (CRU), main Department of Commerce building, Room 1117, and is accessible on the Web at http://ia.ita.doc.gov/frn/index.html. The paper copy and electronic version of the Decision Memo are identical in content.

Final Results of Changed–Circumstances Review

After consideration of the comments, we continue to find that myonic is the successor–in-interest to MKL and, as such, is entitled to MKL's cash–deposit rate with respect to entries of subject merchandise. Consequently, we will instruct U.S. Customs and Border Protection (CBP) to apply the cash–deposit rate in effect for MKL to all entries of the subject merchandise from myonic that were entered, or withdrawn from warehouse, for consumption on or after the date of publication of the final results of this changed–circumstances review. See *Granular Polytetrafluoroethylene Resin from Italy: Final Results of Antidumping Duty Changed Circumstances Review*, 68 FR 25327 (May 12, 2003).

This determination and this notice are in accordance with sections 751(b)(1) and 777(i)(1) of the Act and 19 CFR 351.216.

Dated: December 1, 2008.

David M. Spooner,

Assistant Secretary for Import Administration.

Appendix

1. Changes to MKL
2. Totality of the Circumstances

[FR Doc. E8–29218 Filed 12–9–08; 8:45 am]

BILLING CODE 3510–DS–S

DEPARTMENT OF COMMERCE

International Trade Administration

A–552–801

Certain Frozen Fish Fillets from the Socialist Republic of Vietnam: Extension of Time Limit for the Final Results of the Expedited Sunset Review of the Antidumping Duty Order

AGENCY: Import Administration, International Trade Administration, Department of Commerce.

EFFECTIVE DATE: December 10, 2008.

FOR FURTHER INFORMATION CONTACT: Matthew Renkey, Import Administration, International Trade Administration, U.S. Department of Commerce, 14th Street & Constitution Avenue, NW, Washington, DC 20230; telephone: (202) 482–2312.

SUPPLEMENTARY INFORMATION:

Background

On July 1, 2008, the Department of Commerce (''the Department'') initiated a sunset review of the antidumping duty order on certain frozen fish fillets from the Socialist Republic of Vietnam (''Vietnam'') pursuant to section 751(c) of the Tariff Act of 1930, as amended (''the Act''). *See Initiation of Five–year (''Sunset'') Review*, 73 FR 37411 (July 1, 2008). Based on an adequate response from the domestic interested party and an inadequate response from the respondent interested party, the Department is conducting an expedited sunset review to determine whether revocation of the antidumping duty order would lead to the continuation or

recurrence of dumping, pursuant to section 751(c)(3)(B) of the Act and section 351.218(e)(1)(ii)(C)(2) of the Department's regulations. *See* Letters to the International Trade Commission regarding the Sunset Reviews of the AD/CVD Orders Initiated in July 2007, dated July 22, 2008, and August 20, 2008. On October 31, 2008, the Department published a notice extending the time limit for the completion of the final results of this review by 40 days until December 8, 2008. *See Certain Frozen Fish Fillets From the Socialist Republic of Vietnam: Extension of Time Limit for the Final Results of the Expedited Sunset Review of the Antidumping Duty Order*, 73 FR 64913 (October 31, 2008).

Extension of Time Limits for Final Results

In accordance with section 751(c)(5)(B) of the Act, the Department may extend the 120–day time period for making its determination by not more than 90 days, if it determines that a review is extraordinarily complicated. As set forth in section 751(c)(5)(C)(i) of the Act, the Department may treat a sunset review as extraordinarily complicated if there are a large number of issues, as is the case in this proceeding. Therefore, the Department has determined, pursuant to section 751(c)(5)(C)(i) of the Act, that the first sunset review of frozen fish fillets from Vietnam is extraordinarily complicated. Accordingly, the Department is extending the time limit for the completion of the final results by an additional 50 days, from December 8, 2008, to no later than January 27, 2009, in accordance with section 751(c)(5)(B) of the Act.

This notice is published pursuant to sections 751(c)(5)(B) and 777(i)(1) of the Act.

Dated: December 3, 2008.

Gary Taverman,

Acting Deputy Assistant Secretary for Antidumping and Countervailing Duty Operations.

[FR Doc. E8–29226 Filed 12–9–08; 8:45 am]

BILLING CODE 3510–DS–S

DEPARTMENT OF COMMERCE

International Trade Administration

A–549–817

Certain Hot–Rolled Carbon Steel Flat Products from Thailand: Correction to Notice of Extension of Time Limit for Final Results of Changed Circumstances Review

AGENCY: Import Administration, International Trade Administration, Department of Commerce.

EFFECTIVE DATE: December 10, 2008.

FOR FURTHER INFORMATION CONTACT: John Drury or Angelica Mendoza, AD/CVD Operations, Office 7, Import Administration, International Trade Administration, U.S. Department of Commerce, 14th Street and Constitution Avenue NW, Washington, DC 20230; telephone: (202) 482–0195 or (202) 482–3019, respectively.

Correction

On October 29, 2008, the Department of Commerce published a notice of extension of time limit for the final results of the antidumping duty changed circumstances review of the order on certain hot–rolled carbon steel flat products from Thailand. *See Certain Hot–Rolled Carbon Steel Flat Products from Thailand: Extension of Time Limit for Final Results of Changed Circumstances Review*, 73 FR 64303 (October 29, 2008) (''*Extension Notice*''). Subsequent to the publication of the *Extension Notice* in the **Federal Register**, we identified an inadvertent error.

The *Extension Notice* states incorrectly that the period of this changed circumstances review is October 1, 2005, to September 30, 2006. The *Extension Notice* is hereby corrected to read that the period of this changed circumstance review is July 1, 2006, to June 30, 2007.

This notice is published in accordance with section 777(i) of the Act.

Dated: December 2, 2008.

Stephen J. Claeys,

Deputy Assistant Secretary for Antidumping and Countervailing Duty Operations.

[FR Doc. E8–29208 Filed 12–9–08; 8:45 am]

BILLING CODE 3510–DS–S

DEPARTMENT OF COMMERCE

International Trade Administration

(A–351–828)

Certain Hot–Rolled, Flat–Rolled Carbon Quality Steel Products from Brazil: Final Rescission of Antidumping Duty Administrative Review

AGENCY: Import Administration, International Trade Administration, Department of Commerce.

SUMMARY: In response to a request from Nucor Corporation (''Nucor''), a domestic interested party, the Department of Commerce (''Department'') initiated an administrative review of the antidumping duty order on certain hot–rolled, flat–rolled carbon quality steel products (''hot rolled steel'') from Brazil. This review covers two manufacturer/exporters of the subject merchandise, Companhia Siderurgica Nacional (''CSN'') and Companhia Siderurgica de Tubarao (''CST''), and covers the period March 1, 2007, through February 29, 2008. No interested party commented on the Department's intent to rescind this review upon determining that the parties subject to this review did not have entries during the period of review (''POR'') for which to assess antidumping duties.

EFFECTIVE DATE: December 10, 2008.

FOR FURTHER INFORMATION CONTACT: John Drury or Angelica Mendoza, AD/CVD Operations, Office 7, Import Administration, International Trade Administration, U.S. Department of Commerce, 14th Street and Constitution Avenue, NW, Washington, DC 20230; telephone (202) 482–0195 or (202) 482–3019, respectively.

SUPPLEMENTARY INFORMATION:

Background

On September 3, 2008, the Department of Commerce (''Department'') published a notice of its preliminary intent to rescind this administrative review. *See Certain Hot–Rolled, Flat–Rolled Carbon Quality Steel Products from Brazil: Preliminary Notice of Intent to Rescind Administrative Review*, 73 FR 51440 (September 3, 2008) (*Preliminary Results*). We invited interested parties to comment on our preliminary intent to rescind this review based upon our determination that the parties subject to this review did not have entries during the POR upon which to assess antidumping duties. No interested party submitted comments.

Scope of the Order

For purposes of the order, the products covered are certain hot–rolled flat–rolled carbon–quality steel products of a rectangular shape, of a width of 0.5 inch or greater, neither clad, plated, nor coated with metal and whether or not painted, varnished, or coated with plastics or other non–metallic substances, in coils (whether or not in successively superimposed layers) regardless of thickness, and in straight lengths, of a thickness less than 4.75 mm and of a width measuring at least 10 times the thickness. Universal mill plate (*i.e.*, flat–rolled products rolled on four faces or in a closed box pass, of a width exceeding 150 mm, but not exceeding 1250 mm and of a thickness of not less than 4 mm, not in coils and without patterns in relief) of a thickness not less than 4.0 mm is not included within the scope of the order.

Specifically included in the scope are vacuum degassed, fully stabilized (commonly referred to as interstitial–free (''IF'')) steels, high strength low alloy (''HSLA'') steels, and the substrate for motor lamination steels. IF steels are recognized as low carbon steels with micro–alloying levels of elements such as titanium and/or niobium added to stabilize carbon and nitrogen elements. HSLA steels are recognized as steels with micro–alloying levels of elements such as chromium, copper, niobium, titanium, vanadium, and molybdenum. The substrate for motor lamination steels contains micro–alloying levels of elements such as silicon and aluminum.

Steel products to be included in the scope of this order, regardless of the Harmonized Tariff Schedule of the United States (''HTSUS'') definitions, are products in which: (1) iron predominates, by weight, over each of the other contained elements; (2) the carbon content is 2 percent or less, by weight; and (3) none of the elements listed below exceeds the quantity, by weight, respectively indicated:1.80 percent of manganese, or 1.50 percent of silicon, or 1.00 percent of copper, or 0.50 percent of aluminum, or 1.25 percent of chromium, or 0.30 percent of cobalt, or 0.40 percent of lead, or 1.25 percent of nickel, or 0.30 percent of tungsten, or 0.012 percent of boron, or 0.10 percent of molybdenum, or 0.10 percent of niobium, or 0.41 percent of titanium, or 0.15 percent of vanadium, or 0.15 percent of zirconium.

All products that meet the physical and chemical description provided above are within the scope of this order unless otherwise excluded. The following products, by way of example, are outside and/or specifically excluded from the scope of this order:

- Alloy hot–rolled steel products in which at least one of the chemical elements exceeds those listed above (including *e.g.*, ASTM specifications A543, A387, A514, A517, and A506).
- SAE/AISI grades of series 2300 and higher.
- Ball bearing steels, as defined in the HTSUS.
- Tool steels, as defined in the HTSUS.
- Silico–manganese (as defined in the HTSUS) or silicon electrical steel with a silicon level exceeding 1.50 percent.
- ASTM specifications A710 and A736.
- USS Abrasion–resistant steels (USS AR 400, USS AR 500).
- Hot–rolled steel coil which meets the following chemical, physical and mechanical specifications:

C	Mn	P	S	Si	Cr	Cu	Ni
0.10–0.14%	0.90% Max	0.025% Max	0.005% Max	0.30 - 0.50%	0.30 - 0.50%	0.20 - 0.40%	0.20% Max

Width = 44.80 inches maximum; Thickness = 0.063–0.198 inches; Yield Strength = 50,000 ksi minimum; Tensile Strength = 70,000–88,000 psi.

- Hot–rolled steel coil which meets the following chemical, physical and mechanical specifications:

C	Mn	P	S	Si	Cr	Cu	Ni
0.10–0.16% Mo 0.21% Max	0.70 - 0.90%	0.025% Max	0.006% Max	0.30 - 0.50%	0.30 - 0.50%	0.25%Max	0.20% Max

Width = 44.80 inches maximum; Thickness = 0.350 inches maximum; Yield Strength = 80,000 ksi minimum; Tensile Strength = 105,000 psi Aim. Hot–rolled steel coil which meets the following chemical, physical and mechanical specifications:

C	Mn	P	S	Si	Cr	Cu	Ni
0.10–0.14% V(wt) 0.10% Max	1.30 - 1.80% Cb 0.08% Max	0.025% Max	0.005% Max	0.30 - 0.50%	0.50 - 0.70%	0.20 - 0.40%	0.20% Max

Width = 44.80 inches maximum; Thickness = 0.350 inches maximum; Yield Strength = 80,000 ksi minimum; Tensile Strength = 105,000 psi Aim.

- Hot–rolled steel coil which meets the following chemical, physical and mechanical specifications.

C	Mn	P	S	Si	Cr	Cu	Ni
0.15% Max Nb 0.005% Min	1.40% Max Ca Treated	0.025% Max Al 0.01 - 0.70%	0.010%Max	0.50% Max	1.00% Max	0.50% Max	0.20% Max

Width = 39.37 inches; Thickness = 0.181 inches maximum; Yield Strength = 70,000 psi minimum for thickness 0.148 inches and 65,000 psi minimum for ''thicknesses'' > 0.148 inches; account for 64 FR 38650; Tensile Strength = 80,000 psi minimum.

- Hot–rolled dual phase steel, phase–hardened, primarily with a ferritic–martensitic microstructure, contains 0.9 percent up to and including 1.5 percent silicon by weight, further characterized by either (i) tensile strength between 540 N/mm² and 640 N/mm² and an elongation percentage ≥ 26 percent for thicknesses of 2 mm and above, or (ii) a tensile strength between 590 N/mm² and 690 N/mm² and an elongation percentage ≥ 25 percent for thicknesses of 2 mm and above.
- Hot–rolled bearing quality steel, SAE grade 1050, in coils, with an inclusion rating of 1.0 maximum per ASTM E 45, Method A, with excellent surface quality and chemistry restrictions as follows: 0.012 percent maximum phosphorus, 0.015 percent maximum sulfur, and 0.20 percent maximum residuals including 0.15 percent maximum chromium.
- Grade ASTM A570–50 hot–rolled steel sheet in coils or cut lengths, width of 74 inches (nominal, within ASTM tolerances), thickness of 11 gauge (0.119 inch nominal), mill edge and skin passed, with a minimum copper content of 0.20%.

The merchandise subject to this order is currently classified in the HTSUS at subheadings: 7208.10.15.00, 7208.10.30.00, 7208.10.60.00, 7208.25.30.00, 7208.25.60.00, 7208.26.00.30, 7208.26.00.60, 7208.27.00.30, 7208.27.00.60, 7208.36.00.30, 7208.36.00.60, 7208.37.00.30, 7208.37.00.60, 7208.38.00.15, 7208.38.00.30, 7208.38.00.90, 7208.39.00.15, 7208.39.00.30, 7208.39.00.90, 7208.40.60.30, 7208.40.60.60, 7208.53.00.00, 7208.54.00.00, 7208.90.00.00, 7210.70.30.00, 7210.90.90.00, 7211.14.00.30, 7211.14.00.90, 7211.19.15.00, 7211.19.20.00, 7211.19.30.00, 7211.19.45.00, 7211.19.60.00, 7211.19.75.30, 7211.19.75.60, 7211.19.75.90, 7212.40.10.00, 7212.40.50.00, 7212.50.00.00. Certain hot–rolled flat–rolled carbon–quality steel covered by this order, including: vacuum degassed, fully stabilized; high strength low alloy; and the substrate for motor lamination steel may also enter under the following tariff numbers: 7225.11.00.00, 7225.19.00.00, 7225.30.30.50, 7225.30.70.00, 7225.40.70.00, 7225.99.00.90, 7226.11.10.00, 7226.11.90.30, 7226.11.90.60, 7226.19.10.00, 7226.19.90.00, 7226.91.50.00, 7226.91.70.00, 7226.91.80.00, and 7226.99.01.80. Although the HTSUS subheadings are provided for convenience and Customs purposes, the written description of the merchandise under the order is dispositive.

Final Rescission of Administrative Review

In the *Preliminary Results*, the Department issued a notice of its intent to rescind this review because it was satisfied that there were no U.S. entries of subject merchandise from the respondents (*i.e.*, CST and CSN) during the POR as indicated by the record. *See Preliminary Results*, at 73 FR 51443. As the Department received no comments on its intent to rescind this review, it continues to find that rescission of the review is appropriate. Therefore, the Department is rescinding this review.

Assessment Rates

The Department intends to issue assessment instructions to the U.S. Customs and Border Protection (''CBP'') 15 days after the date of publication of this rescission of administrative review. The Department will direct CBP to assess antidumping duties for CST and CSN at the cash deposit rate in effect on the date of entry for entries during the period March 1, 2007, through February 29, 2008.

Notification to Importers

This notice serves as a final reminder to importers for whom this review is being rescinded, of their responsibility under 19 CFR 351.402(f) to file a certificate regarding reimbursement of antidumping duties prior to liquidation of the relevant entries during this review period. Failure to comply with this requirement could result in the Secretary's presumption that reimbursement of antidumping duties occurred and the subsequent assessment of double antidumping duties.

Notification Regarding Administrative Protective Orders

This notice serves as a reminder to parties subject to administrative protective order (''APO'') of their responsibility concerning the disposition of proprietary information disclosed under APO in accordance with 19 CFR 351.305(a)(3). Timely written notification of the return or destruction of APO materials or conversion to judicial protective order is hereby requested. Failure to comply with the regulations and terms of an APO is a sanctionable violation.

This notice is published in accordance with sections 751(a)(1) and 777(i)(1) of the Tariff Act of 1930, as amended, and 19 CFR 351.213(d)(4).

Dated: December 3, 2008.

Stephen J. Claeys,

Deputy Assistant Secretary for Antidumping and Countervailing Duty Operations.

[FR Doc. E8–29210 Filed 12–9–08; 8:45 am]

BILLING CODE 3510–DS–S

DEPARTMENT OF COMMERCE

International Trade Administration

A–570–506

Porcelain–on-Steel Cooking Ware from the People's Republic of China: Final Results of Antidumping Duty Administrative Review

AGENCY: Import Administration, International Trade Administration, Department of Commerce.

SUMMARY: On September 8, 2008, the Department of Commerce (''Department'') published the preliminary results of its administrative review of the antidumping duty order on porcelain–on-steel cooking ware from the People's Republic of China (''PRC''), covering the period December 1, 2006, to November 30, 2007. *See Porcelain–on-Steel Cooking Ware from the People's Republic of China: Notice of Preliminary Results of Antidumping Duty Administrative Review*, 73 FR 52021 (September 8, 2008) (''*Preliminary Results*''). The Department received no comments on its *Preliminary Results*. Therefore, the final dumping margin for this review is unchanged from the *Preliminary Results*, and is listed in the ''Final Results of the Review'' section below.

EFFECTIVE DATE: December 10, 2008.

FOR FURTHER INFORMATION CONTACT: Toni Dach or Scot Fullerton, AD/CVD Operations, Import Administration, International Trade Administration, U.S. Department of Commerce, 14th Street and Constitution Avenue, NW, Washington, DC 20230; telephone: (202) 482–1655 or (202) 482–1386, respectively.

Background

In response to a request from Columbian Home Products, LLC and OXO International Ltd., an importer of the subject merchandise, the Department initiated an administrative review of producer Xiamen Songson Plastic Hardware Co., Ltd's (''Songson'') exports of porcelain–on-steel cooking

ware from the PRC. *See Initiation of Antidumping and Countervailing Duty Administrative Reviews and Request for Revocation in Part*, 73 FR 4829 (January 28, 2008).

On January 31, 2008, the Department issued its sections A, C and D antidumping duty questionnaire to Songson. The section A response was due on February 21, 2008, and the sections C and D response, as well as U.S. sales and factors of production (''FOP'') reconciliations, were due on March 10, 2008. On February 19, 2008, Songson requested an extension, until March 6, 2008, to file its section A response, and until March 24, 2008, to submit its sections C and D responses. On February 20, 2008, the Department granted Songson's extension request. We received the company's response to section A via regular mail on March 6, 2008. On March 14, 2008, the Department rejected Songson's section A response, as it was not filed in accordance with the Department's regulations. We granted Songson a second opportunity to file a complete section A response, and Songson submitted its revised section A response on March 28, 2008. Songson did not submit its sections C and D responses, or the required sales and FOP reconciliations by the extended due date, or on any date thereafter.

Due to the numerous deficiencies in Songson's section A response, the Department concluded that the company had not satisfactorily demonstrated the absence of *de jure* or *de facto* control over the export activities of Songson by the PRC government. The Department preliminarily determined that Songson did not qualify for a separate rate and is part of the PRC–wide entity. *See Preliminary Results*, at 52022. Because Songson did not provide a complete section A response or a sections C and D response, the Department had no information with which to calculate an antidumping duty margin. Therefore, the Department found that facts available pursuant to sections 776(a)(2)(A) and (C) of the Tariff Act of 1930 (''Act'') was warranted for the PRC–wide entity, including Songson, as Songson had withheld the information requested by the Department and had significantly impeded the proceeding. *See id*. The Department also found that total adverse facts available was warranted for the PRC–wide entity, including Songson, because it failed to cooperate to the best of its ability pursuant to section 776(a)(2) and 776(b) of the Act in not providing the necessary information requested by the Department. *Id*. at 52023.

As noted above, on September 8, 2008, the Department published the *Preliminary Results* and we invited interested parties to comment. No interested party, including Songson, submitted any case brief or comment, nor requested any hearing on the Department's *Preliminary Results*. Therefore, for these final results, the Department made no change in the final dumping margin from the *Preliminary Results*.

Scope of Order

The merchandise covered by the order is porcelain–on-steel cooking ware from the PRC, including tea kettles, which do not have self–contained electric heating elements. All of the foregoing are constructed of steel and are enameled or glazed with vitreous glasses. The merchandise is currently classifiable under the Harmonized Tariff Schedule of the United States (''HTSUS'') item 7323.94.00. HTSUS item numbers are provided for convenience and customs purposes. The written description of the scope remains dispositive.

Final Results of the Review

The Department finds that the following margin exists for the following exporters under review for the period December 1, 2006, through November 30, 2007:

PORCELAIN–ON-STEEL COOKING WARE FROM THE PRC

Manufacturer/Exporter	Weighted–Average Margin (Percent)
PRC–Wide Entity (which includes Xiamen Songson Plastic Hardware Co., Ltd.)	66.65

Assessment of Antidumping Duties

The Department will determine, and U.S. Customs and Border Protection (''CBP'') shall assess, antidumping duties on all appropriate entries pursuant to section 751(a)(1)(B) of the Act, and 19 CFR 351.212(b). The Department intends to issue appropriate assessment instructions directly to CBP 15 days after the date of publication of the final results of this review.

Cash Deposit Requirements

The following cash–deposit requirements will be effective upon publication of the final results for shipments of the subject merchandise entered, or withdrawn from warehouse, for consumption on or after the publication date of the final results, as provided by section 751(a)(2)(C) of the Act: (1) for subject merchandise exported by the PRC–wide entity, including Songson, the cash–deposit rate will be equal to 66.65 percent; (2) for previously investigated or reviewed PRC and non–PRC exporters not listed above that have a separate rate, the cash deposit rate will continue to be the exporter–specific rate published for the most recent period; (3) for all other PRC exporters of subject merchandise which have not been found to be entitled to a separate rate, the cash–deposit rate will be the PRC–wide rate of 66.65 percent; (4) for all non–PRC exporters of subject merchandise which have not received their own rate, the cash–deposit rate will be the rate applicable to the PRC exporter that supplied that non–PRC exporter.

These deposit requirements, when imposed, shall remain in effect until further notice.

Notification to Importers

This notice serves as a final reminder to importers of their responsibility under 19 CFR 351.402(f)(2) to file a certificate regarding the reimbursement of antidumping duties prior to liquidation of the relevant entries during this review period. Failure to comply with this requirement could result in the Secretary's presumption that reimbursement of antidumping duties occurred and the subsequent assessment of double antidumping duties.

This notice also serves as a final reminder to parties subject to the administrative protective order (''APO'') of their responsibility concerning the return or destruction of proprietary information disclosed under the APO in accordance with 19 CFR 351.305. Timely written notification of the return or destruction of APO materials or conversion to judicial protective order is hereby requested. Failure to comply with the regulations and the terms of an APO is a sanctionable violation.

This administrative review and notice is in accordance with sections 751(a)(1) and 777(i)(1) of the Act.

Dated: December 3, 2008.

David M. Spooner,

Assistant Secretary for Import Administration.

[FR Doc. E8–29221 Filed 12–9–08; 8:45 am]

BILLING CODE 3510–DS–S

DEPARTMENT OF COMMERCE

International Trade Administration

(A–570–851)

Certain Preserved Mushrooms from the People's Republic of China: Final Results of Antidumping Duty New Shipper Review

AGENCY: Import Administration, International Trade Administration, Department of Commerce.

SUMMARY: On October 3, 2008, the Department of Commerce (the Department) published in the **Federal Register** the preliminary results of the new shipper review of the antidumping duty order on certain preserved mushrooms from the People's Republic of China (PRC) for Zhangzhou Golden Banyan Foodstuffs Industrial Co., Ltd. (Golden Banyan). *See Certain Preserved Mushrooms From the People's Republic of China: Preliminary Results of Antidumping Duty New Shipper Review*, 73 FR 57597 (October 3, 2008) (*Preliminary Results*). We gave interested parties an opportunity to comment on the *Preliminary Results*, but we received no comments. Therefore, the final results do not differ from the preliminary results.

EFFECTIVE DATE: December 10, 2008.

FOR FURTHER INFORMATION CONTACT: Fred Baker or Robert James, AD/CVD Operations, Office 7, Import Administration, International Trade Administration, U.S. Department of Commerce, 14th Street and Constitution Avenue, NW, Washington, DC 20230; telephone (202) 482–2924 or (202) 482–0649, respectively.

SUPPLEMENTARY INFORMATION: The *Preliminary Results* for this administrative review were published on October 3, 2008. In the *Preliminary Results*, the Department stated that interested parties were to submit case briefs within 30 days of publication of the preliminary results and rebuttal briefs within five days after the due date for filing case briefs. *See Preliminary Results* at 57601. No interested party submitted a case or rebuttal brief.

As noted in the *Preliminary Results*, at the time Golden Banyan submitted its request for new shipper review it was in the process of seeking government approval to change its name from Zhangzhou Golden Banyan Foodstuffs Industrial Co., Ltd. to Fujian Golden Banyan Foodstuffs Industrial Co., Ltd. At that time, Golden Banyan had received preliminary approval for the name change, but was still waiting for the change to apply to its certificate of approval and business license. *See Preliminary Results* at 57597. Therefore, Golden Banyan submitted its request for new shipper review under both names. *See Certain Preserved Mushrooms from the People's Republic of China: Initiation of New Shipper Review*, 73 FR 18772, at footnote 1 (April 7, 2008) (*Initiation*). On November 12, 2008, Golden Banyan submitted evidence that a new certificate of approval was issued on March 12, 2008, and a new business license on September 28, 2008, both of which reflect the new name. This name change became effective February 26, 2008. *See* Golden Banyan's November 12, 2008, submission at 1 and Exhibit 2. Therefore, these final results shall apply to Golden Banyan under its new name, Fujian Golden Banyan Foodstuffs Industrial Co., Ltd.

Period of Review

The period of review (POR) is February 1, 2007, through February 29, 2008.[1]

Scope of the Order

The products covered by this order are certain preserved mushrooms, whether imported whole, sliced, diced, or as stems and pieces. The certain preserved mushrooms covered under this order are the species Agaricus bisporus and Agaricus bitorquis. ''Certain Preserved Mushrooms'' refers to mushrooms that have been prepared or preserved by cleaning, blanching, and sometimes slicing or cutting. These mushrooms are then packed and heated in containers including, but not limited to, cans or glass jars in a suitable liquid medium, including, but not limited to, water, brine, butter or butter sauce. Certain preserved mushrooms may be imported whole, sliced, diced, or as stems and pieces. Included within the scope of this order are ''brined'' mushrooms, which are presalted and packed in a heavy salt solution to provisionally preserve them for further processing.[2]

Excluded from the scope of this order are the following: (1) All other species of mushroom, including straw mushrooms; (2) all fresh and chilled mushrooms, including ''refrigerated'' or ''quick blanched mushrooms'' (3) dried mushrooms; (4) frozen mushrooms; and (5) ''marinated,'' ''acidified,'' or ''pickled'' mushrooms, which are prepared or preserved by means of vinegar or acetic acid, but may contain oil or other additives.

The merchandise subject to this order is classifiable under subheadings: 2003.10.0127, 2003.10.0131, 2003.10.0137, 2003.10.0143, 2003.10.0147, 2003.10.0153 and 0711.51.0000 of the Harmonized Tariff Schedule of the United States (HTSUS). Although the HTSUS subheadings are provided for convenience and customs purposes, the written description of the scope of the order is dispositive.

Separate Rates

In proceedings involving non–market economy (NME) countries, the Department begins with a rebuttable presumption that all companies within the country are subject to government control and, thus, should be assigned a single antidumping duty deposit rate. It is the Department's policy to assign all exporters of merchandise subject to review in an NME country this single rate unless an exporter can demonstrate that it is sufficiently independent so as to be entitled to a separate rate.

In the *Preliminary Results*, we found that Golden Banyan demonstrated its eligibility for separate rate status. We received no comments from interested parties regarding Golden Banyan's separate rate status. In these final results of review, we continue to find the evidence placed on the record by Golden Banyan demonstrates an absence of government control, both in law and in fact, with respect to Golden Banyan's exports of the merchandise under review. Thus, we have determined that Golden Banyan is eligible to receive a separate rate.

Changes Since the Preliminary Results

As we received no comments, we made no changes to the Preliminary Results.

Combination Rate

In new shipper reviews, the Department may, pursuant to 19 CFR 351.107(b), establish a combination cash deposit rate for each combination of the exporter and its supplying producer(s). *See Fresh Garlic From the People's Republic of China: Final Results of Antidumping Duty New Shipper Review*, 67 FR 72139 at 72140 (December 4, 2002); *Notice of Final Results of Antidumping Duty New Shipper Review:*

[1] As indicated in the initiation notice, Golden Banyan's shipment entered the United States shortly after the anniversary month. Therefore, for the reasons given in the initiation notice, we extended the POR to include Golden Banyan's shipment. *See Initiation* at 18772-18773.

[2] On June 19, 2000, the Department affirmed that ''marinated,'' ''acidified,'' or ''pickled'' mushrooms containing less than 0.5 percent acetic acid are within the scope of the antidumping duty order. *See* Recommendation Memorandum - Final Ruling of Request by Tak Fat, *et al.* for Exclusion of Certain Marinated, Acidified Mushrooms from the Scope of the Antidumping Duty Order on Certain Preserved Mushrooms from the People's Republic of China,'' dated June 19, 2000. On February 9, 2005, this decision was upheld by the United States Court of Appeals for the Federal Circuit. *See Tak Fat v. United States*, 396 F.3d 1378 (Fed. Cir. 2005).

Certain In–Shell Raw Pistachios From Iran, 68 FR 353 at 354 (January 3, 2003); and *Certain Forged Stainless Steel Flanges From India: Final Results of Antidumping Duty New Shipper Review*, 68 FR 351 (January 3, 2003). The Department has determined that a combination rate is appropriate in this case, as Golden Banyan is both the producer and exporter of the subject merchandise. Therefore, the Department will include in its cash deposit instructions to U.S. Customs and Border Protection (CBP) appropriate language to enforce these final results of new shipper review on the basis of a combination rate involving Golden Banyan as both the producer and exporter of the subject merchandise.

Final Results of Review

The Department has determined that the following margin exists for the period February 1, 2007, through February 29, 2008:

Exporter/Manufacturer	Weighted–Average Margin (Percentage)
Fujian Golden Banyan Foodstuffs Industrial Co., Ltd.	0.00

Assessment Rates

Pursuant to these final results, the Department determined, and CBP shall assess, antidumping duties on all appropriate entries. The Department intends to issue assessment instructions for Golden Banyan to CBP 15 days after the date of publication of these final results of new shipper review. Pursuant to 19 CFR 351.212(b)(1), we calculated importer–specific (or customer) *ad valorem* duty assessment rates based on the ratio of the total amount of the dumping margins calculated for the examined sales to the total entered value of those same sales. We will instruct CBP to assess antidumping duties on all appropriate entries covered by this review if any importer–specific (or customer) assessment rate calculated in the final results of this review is above *de minimis*.

Cash Deposit Requirements

The following cash deposit requirements will be effective upon publication of these final results of the new shipper review for all shipments of subject merchandise by Golden Banyan under its new name Fujian Golden Banyan Foodstuffs Industrial Co., Ltd. (Golden Banyan), entered, or withdrawn from warehouse, for consumption on or after the publication date, as provided by section 751(a)(2)(C) of the Tariff Act of 1930, as amended (the Act): (1) for subject merchandise produced and exported by Golden Banyan, the cash deposit rate will be zero; (2) for subject merchandise exported by Golden Banyan, but not manufactured by Golden Banyan, the cash deposit rate will continue to be the PRC–wide rate (*i.e.*, 198.63 percent); and (3) for subject merchandise manufactured by Golden Banyan, but exported by any party other than Golden Banyan, the cash deposit rate will be the rate applicable to the exporter. These cash deposit requirements will remain in effect until further notice.

Reimbursement of Duties

This notice also serves as a final reminder to importers of their responsibility under 19 CFR 351.402(f) to file a certificate regarding the reimbursement of antidumping duties prior to liquidation of the relevant entries during this POR. Failure to comply with this requirement could result in the Secretary's presumption that reimbursement of antidumping duties occurred and the subsequent assessment of doubled antidumping duties.

Administrative Protective Orders

This notice also serves as a reminder to parties subject to administrative protective orders (APO) of their responsibility concerning the return or destruction of proprietary information disclosed under APO in accordance with 19 CFR 351.305, which continues to govern business proprietary information in this segment of the proceeding. Timely written notification of the return/destruction of APO materials or conversion to judicial protective order is hereby requested. Failure to comply with the regulations and terms of an APO is a violation which is subject to sanction.

This new shipper review and notice are in accordance with sections 751(a)(2)(B) and 777(i)(1) of the Act and 19 CFR 351.214(h).

Dated: December 3, 2008.

David M. Spooner,

Assistant Secretary for Import Administration.

[FR Doc. E8–29215 Filed 12–9–08; 8:45 am]

BILLING CODE 3510–DS–S

DEPARTMENT OF COMMERCE

National Oceanic and Atmospheric Administration

RIN 0648–XM16

Marine Mammals; File No. 13927

AGENCY: National Marine Fisheries Service (NMFS), National Oceanic and Atmospheric Administration (NOAA), Commerce.

ACTION: Notice; receipt of application.

SUMMARY: Notice is hereby given that Associated Scientists at Woods Hole (ASWH) (Dr. James Hain, Principal Investigator), Box 721, Woods Hole, MA 02543, has applied in due form for a permit to conduct research on North Atlantic right whales (*Eubalaena glacialis*) and other cetacean species.

DATES: Written, telefaxed, or e-mail comments must be received on or before January 9, 2009.

ADDRESSES: The application and related documents are available for review upon written request or by appointment in the following offices:

Permits, Conservation and Education Division, Office of Protected Resources, NMFS, 1315 East-West Highway, Room 13705, Silver Spring, MD 20910; phone (301)713–2289; fax (301)427–2521;

Northeast Region, NMFS, One Blackburn Drive, Gloucester, MA 01930–2298; phone (978)281–9300; fax (978)281–9394; and

Southeast Region, NMFS, 263 13th Avenue South, Saint Petersburg, Florida 33701; phone (727)824–5312; fax (727)824–5309.

Written comments or requests for a public hearing on this application should be mailed to the Chief, Permits, Conservation and Education Division, F/PR1, Office of Protected Resources, NMFS, 1315 East-West Highway, Room 13705, Silver Spring, MD 20910. Those individuals requesting a hearing should set forth the specific reasons why a hearing on this particular request would be appropriate.

Comments may also be submitted by facsimile at (301)427–2521, provided the facsimile is confirmed by hard copy submitted by mail and postmarked no later than the closing date of the comment period.

Comments may also be submitted by e-mail. The mailbox address for providing e-mail comments is *NMFS.Pr1Comments@noaa.gov*. Include in the subject line of the e-mail comment the following document identifier: File No. 13927.

FOR FURTHER INFORMATION CONTACT: Carrie Hubard or Amy Hapeman, (301)713–2289.

SUPPLEMENTARY INFORMATION: The subject permit is requested under the authority of the Marine Mammal Protection Act of 1972, as amended (MMPA; 16 U.S.C. 1361 *et seq.*), the regulations governing the taking and importing of marine mammals (50 CFR part 216), the Endangered Species Act of 1973, as amended (ESA; 16 U.S.C. 1531 *et seq.*), and the regulations governing the taking, importing, and exporting of endangered and threatened species (50 CFR 222–226).

ASWH requests a five-year permit to conduct scientific research focusing primarily on North Atlantic right whales, with a secondary focus on humpback (*Megaptera novaeangliae*) and fin (*Balaenoptera physalus*) whales. The purposes of the right whale research include: (1) to improve knowledge of right whale habitat utilization; (2) to monitor the population in a portion of the southeast U.S. right whale critical habitat; (3) to contribute to the right whale photo-identification catalog; (4) to characterize the shallow water acoustic environment and right whale vocalizations; and (5) to examine sightability from different types of platforms. The feeding behavior of right, fin, and humpback whales would also be studied using aerial platforms.

The main study areas are the waters off northeast Florida in December through April and the waters off Cape Cod, MA in the summer months. Research could occur year round in Atlantic waters from Maine to Florida. The majority of the research would involve aerial surveys conducted from a variety of platforms, including airplanes, blimps, and aerostats. A maximum of 50 fin and 50 humpback whales could be harassed annually during aerial surveys. Seventy-five right whales may be harassed annually during aerial surveys. Twenty other cetacean species, including endangered sperm (*Physeter macrocephalus*), sei (*Balaenoptera acutorostrata*), and blue (*Balaenoptera musculus*) whales, may be incidentally harassed during aerial surveys. Two pinniped species and four species of sea turtles (loggerhead (*Caretta caretta*), leatherback (*Dermochelys coriacea*), Kemp's ridley (*Lepidochelys kempii*), green (*Chelonia mydas*)) may also be incidentally harassed as a result of aerial surveys.

Vessel surveys would also be conducted in U.S. southeast waters. Close approaches to right whales would be made to collect photo-identification, behavioral and passive acoustic data. ASWH proposes to use both motorized (10 right whales harassed annually) and non-motorized (i.e., kayaks) (5 right whales harassed annually) vessels in their research.

Concurrent with the publication of this notice in the **Federal Register**, NMFS is forwarding copies of this application to the Marine Mammal Commission and its Committee of Scientific Advisors.

Dated: December 4, 2008.

P. Michael Payne,

Chief, Permits, Conservation and Education Division, Office of Protected Resources, National Marine Fisheries Service.

[FR Doc. E8–29204 Filed 12–9–08; 8:45 am]

BILLING CODE 3510–22–S

COMMITTEE FOR THE IMPLEMENTATION OF TEXTILE AGREEMENTS

Cancellation of Electronic Visa Information System (ELVIS) Requirements for Textiles and Textile Products Produced or Manufactured in The People's Republic of China and Exported on and after January 1, 2009

December 5, 2008.

AGENCY: Committee for the Implementation of Textile Agreements (CITA).

ACTION: Issuing a directive to the Commissioner, Bureau of Customs and Border Protection canceling all previous directives concerning ELVIS requirements for China.

EFFECTIVE DATE: January 1, 2009.

FOR FURTHER INFORMATION CONTACT: Ross Arnold, International Trade Specialist, Office of Textiles and Apparel, U.S. Department of Commerce, (202) 482–4212. For information on the quota status of this limit, refer to the Bureau of Customs and Border Protection website (http://www.cbp.gov), or call (202) 863–6560. For information on embargoes and quota re-openings, refer to the Office of Textiles and Apparel website at http://otexa.ita.doc.gov.

SUPPLEMENTARY INFORMATION:

Authority: Executive Order 11651 of March 3, 1972, as amended; Section 204 of the Agricultural Act of 1956, as amended (7 U.S.C. 1854).

This directive cancels the ELVIS requirement for goods exported from China on and after January 1, 2009. The ELVIS requirement and quota requirements will continue to remain in effect until further notice for goods exported from China prior to January 1, 2009, even if entered in 2009. This action is consistent with the terms of the bilateral agreement on textiles and apparel between the Governments of the United States of America and the People's Republic of China that was signed on November 8, 2005.

In the letter below, CITA is directing the Bureau of Customs and Border Protection to cancel all ELVIS requirements for goods exported from China on and after January 1, 2009.

Janet E. Heinzen,

Acting Chairman, Committee for the Implementation of Textile Agreements.

Committee for the Implementation of Textile Agreements

December 5, 2008.

Commissioner,
Bureau of Customs and Border Protection, Washington, D.C. 20229.

Dear Commissioner: This directive cancels all previous directives concerning requirements for ELVIS transmissions, issued to you by the Chairman, Committee for the Implementation of Textile Agreements, effective for goods exported from China on and after January 1, 2009.

However, the ELVIS requirement and quota requirements will continue to remain in effect until further notice for goods exported from China prior to January 1, 2009, even if entered in 2009.

The Committee for the Implementation of Textile Agreement has determined that this action falls within the foreign affairs exception to the rulemaking provisions of 5 U.S.C. 553(a)(1).

Sincerely,
Janet E. Heinzen,
Acting Chairman, Committee for the Implementation of Textile Agreements.

[FR Doc. E8–29211 Filed 12–9–08; 8:45 am]

BILLING CODE 3510–DS

DEPARTMENT OF DEFENSE

Department of the Air Force

Intent To Grant an Exclusive Patent License

SUMMARY: Pursuant to the provisions of 37 CFR 404.4, which implements Public Law 96–517, as amended, the Department of the Air Force announces its intention to grant to EMTEC, a non-profit member based organization registered in Ohio, having a place of business at 3155 Research Blvd., Dayton, Ohio 45420, an exclusive license in any right, title, and interest the Air Force has in the invention described in: Air Force invention number AFD 881, entitled *Light Emitting Diode with a Deoxyribonucleic Acid (DNA) Biopolymer Phosphor Based Coating for Solid State Lighting Object.*

FOR FURTHER INFORMATION: License for this invention will be granted unless a written objection is received within fifteen (15) days from the date of publication of this Notice. Written objections should be sent to: Air Force

Materiel Command Law Office, AFMCLO/JAZ, Building 11, room D18, 2240 B Street, Wright-Patterson AFB OH 45433–7109, Attention, Bart S. Hersko. Telephone: (937) 255–2838; Facsimile (937) 255–3733 or e-mail: *Bart.Hersko@wpafb.af.mil.*

Bao-Anh Trinh,

Air Force Federal Register Liaison Officer.

[FR Doc. E8–29163 Filed 12–9–08; 8:45 am]

BILLING CODE 5001–05–P

DEPARTMENT OF DEFENSE

Department of the Air Force

Intent To Grant an Exclusive Patent License

SUMMARY: Pursuant to the provisions of Part 404 of Title 37, Code of Federal Regulations, which implements Public Law 96–517, as amended, the Department of the Air Force announces its intention to grant X5 Systems, Inc. a corporation of Delaware, having a place of business at 140 Meadowbrook Drive, Los Gatos, California 95032, an exclusive license in any right, title and interest the United States Air Force has in: U.S. Patent Number 5,719,794, filed on July 19, 1995 and issued on February 17, 1998, entitled ''A Process for the Design of Antennas using Genetic Algorithms'' by Edward E. Altshuler as sole inventor.

FOR FURTHER INFORMATION CONTACT: A license for this patent will be granted unless a written objection is received within fifteen (15) days from the date of publication of this Notice. Written objections should be sent to: Air Force Research Laboratory, Office of the Staff Judge Advocate, AFRL/RIJ, 26 Electronic Parkway, Rome, New York 13441–4514. Telephone: (315) 330–2087; Facsimile (315) 330–7583.

Bao-Anh Trinh,

Air Force Federal Register Liaison Officer.

[FR Doc. E8–29164 Filed 12–9–08; 8:45 am]

BILLING CODE 5001–05–P

DEPARTMENT OF EDUCATION

Notice of Proposed Information Collection Requests

AGENCY: Department of Education.

SUMMARY: The Leader, Information Management Case Services Team, Regulatory Information Management Services, Office of the Chief Information Officer, invites comments on the proposed information collection requests as required by the Paperwork Reduction Act of 1995.

DATES: Interested persons are invited to submit comments on or before February 9, 2009.

SUPPLEMENTARY INFORMATION: Section 3506 of the Paperwork Reduction Act of 1995 (44 U.S.C. Chapter 35) requires that the Office of Management and Budget (OMB) provide interested Federal agencies and the public an early opportunity to comment on information collection requests. OMB may amend or waive the requirement for public consultation to the extent that public participation in the approval process would defeat the purpose of the information collection, violate State or Federal law, or substantially interfere with any agency's ability to perform its statutory obligations. The Leader, Regulatory Information Management Group, Office of the Chief Information Officer, publishes that notice containing proposed information collection requests prior to submission of these requests to OMB. Each proposed information collection, grouped by office, contains the following: (1) Type of review requested, *e.g.* new, revision, extension, existing or reinstatement; (2) Title; (3) Summary of the collection; (4) Description of the need for, and proposed use of, the information; (5) Respondents and frequency of collection; and (6) Reporting and/or Recordkeeping burden. OMB invites public comment.

The Department of Education is especially interested in public comment addressing the following issues: (1) Is this collection necessary to the proper functions of the Department; (2) will this information be processed and used in a timely manner; (3) is the estimate of burden accurate; (4) how might the Department enhance the quality, utility, and clarity of the information to be collected; and (5) how might the Department minimize the burden of this collection on the respondents, including through the use of information technology.

Dated: December 4, 2008.

Angela C. Arrington,

Leader, Information Management Case Services Team, Regulatory Information Management Services, Office of the Chief Information Officer.

Federal Student Aid

Type of Review: Extension.

Title: Lender Application Process (LAP).

Frequency: On Occasion.

Affected Public: Businesses or other for-profit State, Local, or Tribal Gov't, SEAs or LEAs.

Reporting and Recordkeeping Hour Burden:

Responses: 58

Burden Hours: 9.

Abstract: The Lender's Application Process is submitted by lenders who are eligible for reimbursement of interest and special allowance, as well as Federal Insured Student Loan (FISL) claims payment, under the Federal Family Education Loan Program. The information will be used by the Department of Education (ED) to update Lender Identification Numbers (LIDs), lenders names, addresses with 9 digit zip codes and other pertinent information.

Requests for copies of the proposed information collection request may be accessed from *http://edicsweb.ed.gov,* by selecting the ''Browse Pending Collections'' link and by clicking on link number 3917. When you access the information collection, click on ''Download Attachments'' to view. Written requests for information should be addressed to U.S. Department of Education, 400 Maryland Avenue, SW., LBJ, Washington, DC 20202–4537. Requests may also be electronically mailed to *ICDocketMgr@ed.gov* or faxed to 202–401–0920. Please specify the complete title of the information collection when making your request.

Comments regarding burden and/or the collection activity requirements should be electronically mailed to *ICDocketMgr@ed.gov.* Individuals who use a telecommunications device for the deaf (TDD) may call the Federal Information Relay Service (FIRS) at 1–800–877–8339.

[FR Doc. E8–29179 Filed 12–9–08; 8:45 am]

BILLING CODE 4000–01–P

DEPARTMENT OF EDUCATION

Notice of Proposed Information Collection Requests

AGENCY: Department of Education.

SUMMARY: The Leader, Information Management Case Services Team, Regulatory Information Management Services, Office of the Chief Information Officer, invites comments on the proposed information collection requests as required by the Paperwork Reduction Act of 1995.

DATES: Interested persons are invited to submit comments on or before February 9, 2009.

SUPPLEMENTARY INFORMATION: Section 3506 of the Paperwork Reduction Act of 1995 (44 U.S.C. Chapter 35) requires that the Office of Management and Budget (OMB) provide interested Federal agencies and the public an early opportunity to comment on information

collection requests. OMB may amend or waive the requirement for public consultation to the extent that public participation in the approval process would defeat the purpose of the information collection, violate State or Federal law, or substantially interfere with any agency's ability to perform its statutory obligations. The Leader, Regulatory Information Management Group, Office of the Chief Information Officer, publishes that notice containing proposed information collection requests prior to submission of these requests to OMB. Each proposed information collection, grouped by office, contains the following: (1) Type of review requested, e.g. new, revision, extension, existing or reinstatement; (2) Title; (3) Summary of the collection; (4) Description of the need for, and proposed use of, the information; (5) Respondents and frequency of collection; and (6) Reporting and/or Recordkeeping burden. OMB invites public comment.

The Department of Education is especially interested in public comment addressing the following issues: (1) is this collection necessary to the proper functions of the Department; (2) will this information be processed and used in a timely manner; (3) is the estimate of burden accurate; (4) how might the Department enhance the quality, utility, and clarity of the information to be collected; and (5) how might the Department minimize the burden of this collection on the respondents, including through the use of information technology.

Dated: December 4, 2008.

Angela C. Arrington,

Leader, Information Management Case Services Team Regulatory Information Management Services, Office of the Chief Information Officer.

Office of the Secretary

Type of Review: Extension.

Title: Survey on Ensuring Equal Opportunity for Applicants.

Frequency: Annually.

Affected Public: Businesses or other for-profit; Not-for-profit institutions.

Reporting and Recordkeeping Hour Burden:

Responses: 18,800.

Burden Hours: 1,503.

Abstract: To ensure equal opportunity for all applicants including community-based, faith-based and religious groups, it is essential to collect information that allows Federal agencies to determine the level of participation of such organizations in Federal grant programs while ensuring that such information is not used in grant-making decisions.

Requests for copies of the proposed information collection request may be accessed from *http://edicsweb.ed.gov,* by selecting the ''Browse Pending Collections'' link and by clicking on link number 3857. When you access the information collection, click on ''Download Attachments'' to view. Written requests for information should be addressed to U.S. Department of Education, 400 Maryland Avenue, SW., LBJ, Washington, DC 20202–4537. Requests may also be electronically mailed to *ICDocketMgr@ed.gov* or faxed to 202–401–0920. Please specify the complete title of the information collection when making your request.

Comments regarding burden and/or the collection activity requirements should be electronically mailed to *ICDocketMgr@ed.gov*. Individuals who use a telecommunications device for the deaf (TDD) may call the Federal Information Relay Service (FIRS) at 1–800–877–8339.

[FR Doc. E8–29180 Filed 12–9–08; 8:45 am]

BILLING CODE 4000–01–P

DEPARTMENT OF ENERGY

Extension of Public Comment Period on the Draft Global Nuclear Energy Partnership Programmatic Environmental Impact Statement

AGENCY: Office of Nuclear Energy, U.S. Department of Energy.

ACTION: Notice of extension of public comment period.

SUMMARY: On October 17, 2008, DOE published a Notice of Availability and Public Hearings (73 FR 61845) for the *Draft Global Nuclear Energy Partnership Programmatic Environmental Impact Statement* (Draft GNEP PEIS, DOE/EIS–0396). That notice commenced a 60-day public comment period and provided the schedule for 13 public hearings to receive comments on the Draft GNEP PEIS. Today, DOE announces an extension of the public comment period by 90 days. The public comment period on the Draft GNEP PEIS will end March 16, 2009.

FOR FURTHER INFORMATION CONTACT: Please direct questions regarding the extension of the public comment period, requests for additional information, or requests for copies of the Draft GNEP PEIS to Mr. Francis Schwartz, GNEP PEIS Document Manager, Office of Nuclear Energy (NE–5), U.S. Department of Energy, 1000 Independence Avenue, SW., Washington, DC 20585. Questions also may be telephoned, toll free, to 1–866–645–7803.

For general information regarding the DOE NEPA process contact: Ms. Carol M. Borgstrom, Director, Office of NEPA Policy and Compliance (GC–20), U.S. Department of Energy, 1000 Independence Avenue, SW., Washington, DC 20585, telephone 202–586–4600, or leave a message at 1–800–472–2756. Additional information regarding DOE NEPA activities and access to many of DOE's NEPA documents are available on the Internet through the DOE NEPA Web site at *http://www.gc.energy.gov/NEPA*.

SUPPLEMENTARY INFORMATION: On October 17, 2008, DOE published a Notice of Availability and Public Hearings (73 FR 61845) for the *Draft Global Nuclear Energy Partnership Programmatic Environmental Impact Statement* (Draft GNEP PEIS, DOE/EIS–0396). That notice commenced a 60-day public comment period and provided the schedule for 13 public hearings to receive comments on the Draft GNEP PEIS. Today, DOE announces an extension of the public comment period by 90 days.

In response to public requests, DOE is extending the comment period by 90 days to allow for additional review and comment on the Draft GNEP PEIS. DOE invites comments on the Draft GNEP PEIS during the public comment period, which ends on March 16, 2009. DOE will consider comments received after this date to the extent practicable as it prepares the Final GNEP PEIS.

Written comments on the Draft GNEP PEIS should be submitted to Mr. Francis Schwartz, GNEP PEIS Document Manager, Office of Nuclear Energy (NE–5), U.S. Department of Energy, 1000 Independence Ave, SW., Washington, DC 20585, by facsimile to 866–489–1891, or electronically through *http://www.regulations.gov*. Please mark correspondence ''Draft GNEP PEIS Comments.'' Additional information regarding commenting on the Draft GNEP PEIS may be found at *http://www.gnep.energy.gov/peis/commenting.html*.

The Draft GNEP PEIS and supporting references are available in public reading rooms (listed below) and on the Internet at *http://www.gnep.energy.gov*. In addition, the Draft GNEP PEIS is available on the Internet at *http://www.regulations.gov* and on the DOE NEPA Web site at *http://www.gc.energy.gov/NEPA*.

U.S. Department of Energy, FOIA/Privacy Act Group, 1000 Independence Avenue, SW., Washington, DC 20585, Phone: (202) 586–3142;

Carlsbad Field Office, U.S. Department of Energy, WIPP Information Center, 4021 National Parks Highway, PO Box 2078,

Carlsbad, New Mexico 88220, Phone: 1–800–336–WIPP;

Chicago Operations Office, U.S. Department of Energy, Office of Science Public Reading Room, Document Department, University Library, The University of Illinois at Chicago, 801 South Morgan Street, 3rd Floor Center, Chicago, Illinois 60607, DOE Contact: Gary Pitchford, Phone: (630) 252–2013;

Idaho Operations Office, U.S. Department of Energy, Public Reading Room, 1776 Science Center Drive, Idaho Falls, Idaho 83415–2300, Reading Room Contact: Gail Willmore, Phone: (208) 526–9162;

Paducah Gaseous Diffusion Plant, Department of Energy, Environmental Information Center and Reading Room, 115 Memorial Drive, Barkley Centre, Paducah, Kentucky 42001, Phone: (270) 554–6979;

Los Alamos Site Office, LANL Research Library, Technical Area 3, Building 207, Los Alamos, New Mexico 87545, Phone: (505) 667–5809;

Oak Ridge Operations Office, DOE Oak Ridge Information Center, 475 Oak Ridge Turnpike, Oak Ridge, Tennessee 37830, Phone: (865) 241–4780 or (toll-free) 1(800) 382–6938, option 6;

Richland Operations Office, U.S. Department of Energy, Public Reading Room, MSIN H2–53, P.O. Box 999, Richland, Washington 99352, Contact: Terri Traub, Phone: (509) 372–7443;

Savannah River Operations Office, U.S. Department of Energy, Public Reading Room, 471 University Parkway, Aiken, South Carolina 29801, Contact: Paul Lewis, Phone: (803) 641–3320;

Albuquerque Operations Office, FOIA Reading Room and DOE Reading Rooms, Government Information Department, Zimmerman Library, University of New Mexico, Albuquerque, New Mexico 87131–1466, Contact: Dan Barkley, Phone: (505) 277–7180;

Portsmouth Gaseous Diffusion Plant, Department of Energy, Environmental Information Center, 1862 Shyville Road, Room 220, Piketon, Ohio 45661.

Issued in Washington, DC on December 4, 2008.

Dennis R. Spurgeon,

Assistant Secretary for Nuclear Energy.

[FR Doc. E8–29238 Filed 12–9–08; 8:45 am]

BILLING CODE 6450–01–P

DEPARTMENT OF ENERGY

National Nuclear Security Administration

Amended Record of Decision: Surplus Plutonium Disposition; Waste Solidification Building

AGENCY: National Nuclear Security Administration, U.S. Department of Energy.

ACTION: Amended Record of Decision.

SUMMARY: The National Nuclear Security Administration (NNSA), a separately organized agency within the U.S. Department of Energy (DOE), is amending the Record of Decision (ROD) for the *Surplus Plutonium Disposition Environmental Impact Statement* (SPD EIS) (DOE/EIS–0283, November 1999). In the SPD EIS ROD (65 FR 1608; January 11, 2000), DOE announced decisions for implementing the U.S. Surplus Plutonium Disposition Program, including affirming its January 1997 decision (62 FR 3014) to pursue a hybrid approach for the safe and secure disposition of up to 50 metric tons of surplus weapons-usable plutonium using both immobilization and mixed oxide (MOX) fuel technologies as evaluated in the *Storage and Disposition of Weapons-Usable Fissile Materials Programmatic Environmental Impact Statement* (Storage and Disposition PEIS) (DOE/EIS–0229, November 1996). Decisions announced in the SPD EIS ROD included construction and operation of three new facilities at the Savannah River Site (SRS) near Aiken, South Carolina, to disposition approximately 17 tons of surplus plutonium using the immobilization approach and the use of up to 33 metric tons as MOX fuel that would be irradiated in commercial reactors. The three new facilities were identified as a pit disassembly and conversion facility (PDCF), an immobilization facility,[1] and a MOX fuel fabrication facility (MFFF). These facilities as analyzed in the SPD EIS were to be constructed in F-Area at SRS and included capabilities for management of wastes generated as part of the processing activities in each of the facilities. DOE/NNSA is today announcing its decision to construct and operate a standalone building, the waste solidification building (WSB), for treating and solidifying liquid transuranic waste and certain liquid low-level radioactive wastes from MFFF and PDCF, specifically a high-activity (high-alpha) waste stream from MFFF, a low-activity stripped-uranium waste stream from MFFF, and a low-activity laboratory waste stream from PDCF.[2] This decision is based on the *Supplement Analysis for Construction and Operation of a Waste Solidification Building at the Savannah River Site* (WSB SA) (DOE/EIS–0283–SA–2) prepared pursuant to DOE procedures implementing the National Environmental Policy Act (NEPA) (10 CFR 1021.314). The WSB SA demonstrates that construction and operation of a standalone WSB represent neither substantial changes relevant to environmental concerns nor significant new circumstances or information relevant to environmental concerns from those evaluated in previous NEPA documents.

FOR FURTHER INFORMATION CONTACT: For further information concerning construction and operation of the waste solidification building, or to obtain copies of this amended ROD, contact: Ms. Sachiko W. McAlhany, Office of Site Engineering and Construction Management, U.S. Department of Energy/National Nuclear Security Administration, Savannah River Site, Aiken, South Carolina 29802, Telephone: (803) 952–6110, E-mail: *sachiko-w.mcalhany@nnsa.srs.gov*.

For information on the DOE's NEPA process, contact: Ms. Carol M. Borgstrom, Director, Office of NEPA Policy and Compliance, GC–20, U.S. Department of Energy, 1000 Independence Avenue, SW., Washington, DC 20585–0103, (202) 586–4600, or leave a message at (800) 472–2756.

This Amended ROD, the WSB SA, and other DOE NEPA documents are available on the DOE NEPA Web site at *http://www.gc.energy.gov/NEPA*.

SUPPLEMENTARY INFORMATION:

Background

The U.S. Surplus Plutonium Disposition Program was first evaluated under NEPA in the Storage and Disposition PEIS. Among the alternatives evaluated, the Reactor Category and Common Activities Alternative included a MOX fuel fabrication facility conceptual design with a standalone building to manage wastes. The ROD for the Storage and Disposition PEIS (62 FR 3014) outlined DOE's decision to pursue a hybrid disposition strategy that allowed for both immobilization of surplus weapons-usable plutonium for disposal in a geologic repository and fabrication of MOX fuel for use in existing domestic, commercial nuclear power reactors followed by disposal of the spent MOX fuel in a geologic repository.

Subsequent to the Storage and Disposition PEIS, DOE prepared the SPD EIS, which supported selection of specific technologies and sites for

---

[1] In an April 19, 2002, amended ROD (67 FR 19432), DOE announced cancellation of the immobilization component of the U.S. Surplus Plutonium Disposition Program.

[2] The decision announced in this amended ROD is consistent with the approach discussed in the Construction Authorization Request and the License Application submitted to the Nuclear Regulatory Commission (NRC) by DOE/NNSA's contractor for the Mixed Oxide (MOX) Fuel Fabrication Facility. The decision also is consistent with the approach discussed in the NRC's *Environmental Impact Statement on the Construction and Operation of a Proposed Mixed Oxide Fuel Fabrication Facility at the Savannah River Site, South Carolina* (NUREG–1767).

surplus plutonium disposition. In the ROD for the SPD EIS (65 FR 1608; January 11, 2000), DOE announced its decision to fabricate approximately 33 metric tons (36 tons) of surplus weapons-usable plutonium in pits and clean metal into MOX fuel for use in existing domestic, commercial nuclear power reactors and to immobilize approximately 17 metric tons (19 tons) of surplus weapons-usable non-pit plutonium in a ceramic matrix surrounded by Defense Waste Processing Facility [3] high-level radioactive waste glass. In the 2000 ROD, DOE also announced that the three facilities required to effect this disposition (MFFF, PDCF, and an Immobilization Facility) would be constructed and operated at SRS.

On April 19, 2002, DOE/NNSA announced in an Amended ROD for the Storage and Disposition PEIS and the SPD EIS (67 FR 19432) that it was cancelling the immobilization component of the U.S. Surplus Plutonium Disposition Program, thereby reducing the number of facilities to be constructed at SRS from three to two. In the amended ROD, DOE/NNSA explained that the revised disposition strategy involved a MOX-only approach, under which up to 34 metric tons (37 tons) of surplus plutonium would be dispositioned by converting it to MOX fuel and irradiating the fuel in existing domestic, commercial nuclear power reactors. The DOE/NNSA also indicated that no final decisions would be made with respect to the MOX portion of the revised disposition program until DOE/NNSA had completed additional analysis pursuant to NEPA. That additional NEPA analysis was completed upon issuance of the *Supplement Analysis for Changes Needed to the Surplus Plutonium Disposition Program* (MOX SA) (DOE/EIS–0283–SA1) in April 2003, and an Amended ROD was issued (68 FR 20134; April 24, 2003) announcing DOE/NNSA's decision to fabricate 34 metric tons (37 tons) of surplus plutonium into MOX fuel, including up to 6.5 metric tons (7.2 tons) originally intended for immobilization.

In the MOX SA, DOE/NNSA evaluated proposed changes to the Surplus Plutonium Disposition Program to accommodate fabrication of this additional plutonium into MOX fuel at MFFF and also those refinements identified through the design process for MFFF. Consistent with the design at the time, a stand-alone WSB in which both liquid low-level radioactive waste and transuranic waste would be treated and solidified was evaluated in the MOX SA. This was a refinement from the facility designs assumed in the SPD EIS, in which MFFF and PDCF each included waste processing equipment to treat and solidify low-level radioactive waste and transuranic waste. A stand-alone WSB takes advantage of an economy of scale in that similar waste streams from both MFFF and PDCF can be treated together in the same location, rather than having duplicate equipment installed in both facilities. A stand-alone WSB was also evaluated by the U.S. Nuclear Regulatory Commission (NRC) in the 2005 *Environmental Impact Statement on the Construction and Operation of a Proposed Mixed Oxide Fuel Fabrication Facility at the Savannah River Site, South Carolina* (MFFF EIS).[4] A standalone WSB is also discussed in the Construction Authorization Request and the License Application submitted to the Nuclear Regulatory Commission by DOE/NNSA's contractor to design, construct and operate MFFF.

Waste Solidification Building

During the detailed design process for the MFFF, and after DOE/NNSA considered using existing SRS facilities for processing all or some of the MFFF and PDCF waste streams, the MFFF design was changed from the conceptual design evaluated in the SPD EIS to include the standalone WSB, because, among other reasons, closure schedules for these SRS facilities were not at that time compatible with the Surplus Plutonium Disposition schedule.

In 2004, planning for WSB was suspended because of uncertainties with the Surplus Plutonium Disposition Program. Specifically, delays in negotiations with the Russian Federation (for Russian disposition of excess Russian weapons-grade plutonium) coupled with significant funding constraints for the domestic program had caused the project schedules for MFFF and PDCF to be extended. At that time, detailed design for WSB was about to begin, with the assumption that treatment for five liquid waste streams from MFFF and PDCF would occur in WSB. Because of the programmatic uncertainties, DOE/NNSA determined instead to suspend WSB Project activities.

Design activities for WSB resumed in 2006. During the project suspension, changes in closure schedules for certain SRS waste management facilities allowed DOE/NNSA to reconsider the use of existing SRS site treatment capabilities that were originally scheduled to be shut down before completion of the plutonium disposition mission. As a result, DOE/NNSA requested the SRS management and operating contractor to undertake an analysis to identify potential reasonable alternatives that would lead to the optimum WSB configuration. The goal of this study was to identify which waste processing and management operations could be conducted in existing SRS facilities and which, if any, would need to be provided independently.

The study comparing a range of potential alternatives comprising combinations of new and existing facilities was submitted in June 2005. The DOE/NNSA evaluation of these alternatives showed that the most reasonable alternative with the least project risk would be to (1) use existing SRS facilities (the Effluent Treatment Project) for waste treatment for two waste streams projected to have minimal (or no) radioactive contamination; (2) use existing SRS facilities for certification, packaging and shipping wastes solidified in WSB or generated during WSB operations; and (3) provide independent treatment and management capabilities (i.e., construct and operate a WSB) for three waste streams that are not compatible with existing SRS operations without major, costly modifications to SRS facilities and planned closure schedules.

The WSB will be constructed near MFFF and PDCF in F-Area and will process liquid waste streams from both MFFF and PDCF. The WSB will receive three waste streams transferred from MFFF and PDCF through underground, double-walled stainless steel lines: A high-activity (high-alpha) waste stream from MFFF, a low-activity stripped-uranium waste stream from MFFF, and a low-activity waste stream from the PDCF laboratory. Waste streams will be stored at WSB in tanks pending subsequent treatment by neutralization, volume reduction by evaporation, and cementation. Condensed overheads from the evaporators will be either transferred through a lift station and piping to the existing SRS Effluent Treatment Project if the overheads meet

[3] Nuclear materials production operations at SRS resulted in generation of large quantities of high-level radioactive waste. The Defense Waste Processing Facility was constructed at SRS to convert this high-level radioactive waste to a stable glass form suitable for disposal in a geologic repository.

[4] Pursuant to Section 202(5) of the Energy Reorganization Act as added by Section 3134 of the Strom Thurmond National Defense Authorization Act for Fiscal Year 1999, MFFF must be licensed by the NRC. NRC prepared the MFFF EIS in accordance with NEPA to support NRC licensing decisions concerning MFFF. Neither WSB nor PDCF will be licensed by NRC, but both were evaluated in the MFFF EIS as connected actions.

the acceptance criteria for that facility or routed back through WSB processes for further treatment.

The WSB SA discusses existing NEPA evaluations for surplus plutonium disposition activities relative to WSB, and provides a comparison of the potential environmental impacts of constructing and operating the WSB in F-Area at SRS to impacts identified in the SPD EIS for constructing and operating MFFF and PDCF. The WSB SA also qualitatively compares the impacts of a stand-alone WSB to the impacts of the relevant waste processing, treatment and solidification operations discussed as part of both the MFFF and the PDCF in the SPD EIS. Construction and operation of the stand-alone WSB to treat and solidify transuranic and low-level radioactive wastes from MFFF and PDCF does not involve environmental impacts that are significantly different from those identified in previous NEPA analyses, in particular, the SPD EIS. Activities proposed for this stand-alone building, the WSB, would be similar to those identified in the SPD EIS to occur separately in both MFFF and PDCF.

The WSB SA demonstrates that construction and operation of a stand-alone WSB represent neither substantial changes relevant to environmental concerns nor significant new circumstances or information relevant to environmental concerns. Therefore, pursuant to 10 CFR 1021.314(c), no additional NEPA analyses are required to construct and operate a stand-alone WSB.

Decision

DOE/NNSA has decided to construct and operate a stand-alone waste solidification building for treating and solidifying liquid transuranic waste and certain liquid low-level radioactive wastes generated by MFFF and PDCF, specifically a high-activity (high-alpha) waste stream from MFFF, a low-activity stripped-uranium waste stream from MFFF, and a low-activity laboratory waste stream from PDCF. As described in the WSB SA (DOE/EIS–0283–SA–2), the potential environmental impacts of constructing and operating a stand-alone WSB are not significantly different from the impacts of treating and solidifying these wastes in MFFF and PDCF as analyzed in the SPD EIS.

Issued in Washington, DC this 26th day of November, 2008.

Thomas P. D'Agostino,

Administrator, National Nuclear Security Administration.

[FR Doc. E8–29240 Filed 12–9–08; 8:45 am]

BILLING CODE 6450–01–P

ENVIRONMENTAL PROTECTION AGENCY

[EPA–HQ–OECA–2008–0365; FRL–8749–6]

Agency Information Collection Activities; Submission to OMB for Review and Approval; Comment Request; NESHAP for Primary Lead Smelters, EPA ICR Number 1856.06, OMB Control Number 2060–0414

AGENCY: Environmental Protection Agency (EPA).

ACTION: Notice.

SUMMARY: In compliance with the Paperwork Reduction Act (44 U.S.C. 3501 et seq.), this document announces that an Information Collection Request (ICR) has been forwarded to the Office of Management and Budget (OMB) for review and approval. This is a request to renew an existing approved collection. The ICR which is abstracted below describes the nature of the collection and the estimated burden and cost.

DATES: Additional comments may be submitted on or before January 9, 2009.

ADDRESSES: Submit your comments, referencing docket ID number EPA–OECA–2008–0365, to (1) EPA online using *http://www.regulations.gov* (our preferred method), or by e-mail to *docket.oeca@epa.gov*, or by mail to: EPA Docket Center (EPA/DC), Environmental Protection Agency, Enforcement and Compliance Docket and Information Center, mail code 2201T, 1200 Pennsylvania Avenue, NW., Washington, DC 20460, and (2) OMB at: Office of Information and Regulatory Affairs, Office of Management and Budget (OMB), Attention: Desk Officer for EPA, 725 17th Street, NW., Washington, DC 20503.

FOR FURTHER INFORMATION CONTACT: Sounjay Gairola, Office of Enforcement and Compliance Assurance, Environmental Protection Agency, 1200 Pennsylvania Avenue, NW, Washington, DC 20460; telephone number: (202) 564–4003; e-mail address: *gairola.sounjay@epa.gov*.

SUPPLEMENTARY INFORMATION: EPA has submitted the following ICR to OMB for review and approval according to the procedures prescribed in 5 CFR 1320.12. On May 30, 2008 (73 *FR* 31088), EPA sought comments on this ICR pursuant to 5 CFR 1320.8(d). EPA received no comments. Any additional comments on this ICR should be submitted to EPA and OMB within 30 days of this notice.

EPA has established a public docket for this ICR under docket ID number EPA–HQ–OECA–2008–0365, which is available for public viewing online at *http://www.regulations.gov*, in person viewing at the Enforcement and Compliance Docket in the EPA Docket Center (EPA/DC), EPA West, Room 3334, 1301 Constitution Avenue, NW., Washington, DC. The EPA Docket Center Public Reading Room is open from 8:30 a.m. to 4:30 p.m., Monday through Friday, excluding legal holidays. The telephone number for the Reading Room is (202) 566–1744, and the telephone number for the Enforcement and Compliance Docket is (202) 566–1927.

Use EPA's electronic docket and comment system at *http://www.regulations.gov*, to submit or view public comments, access the index listing of the contents of the docket, and to access those documents in the docket that are available electronically. Once in the system, select ''docket search,'' then key in the docket ID number identified above. Please note that EPA's policy is that public comments, whether submitted electronically or in paper, will be made available for public viewing at *http://www.regulations.gov*, as EPA receives them and without change, unless the comment contains copyrighted material, Confidential Business Information (CBI), or other information whose public disclosure is restricted by statute. For further information about the electronic docket, go to *http://www.regulations.gov*.

Title: NESHAP for Primary Lead Smelters (Renewal).

ICR Numbers: EPA ICR Number 1856.06, OMB Control Number 2060–0414.

ICR Status: This ICR is scheduled to expire on February 28, 2009. Under OMB regulations, the Agency may continue to conduct or sponsor the collection of information while this submission is pending at OMB. An Agency may not conduct or sponsor, and a person is not required to respond to, a collection of information unless it displays a currently valid OMB control number. The OMB control numbers for EPA's regulations in title 40 of the CFR, after appearing in the **Federal Register** when approved, are listed in 40 CFR part 9, and displayed either by publication in the **Federal Register** or by other appropriate means, such as on the related collection instrument or form, if applicable. The display of OMB control numbers in certain EPA regulations is consolidated in 40 CFR part 9.

Abstract: The National Emission Standards for Hazardous Air Pollutants (NESHAP) for Primary Lead Smelters were proposed on April 17, 1998 (63 *FR* 19200) and promulgated on June 4, 1999 (64 *FR* 30204). On February 12, 1999,

the Agency publicized a supplemental rulemaking for ferroalloys, mineral wool, primary copper, primary lead and wool fiberglass which enhanced the requirements for bag leak detection systems in 40 CFR 63.1625 and 40 CFR 63.1655 by including an enforceable operating limit in this rule. These standards apply to emissions sources from primary lead smelters including sinter machine, blast furnace, dross furnace, process fugitive, and fugitive dust sources.

The affected entities are subject to the General Provisions of the NESHAP at 40 CFR part 63, subpart A, and any changes, or additions to the General Provisions specified at 40 CFR part 63, subpart TTT.

Respondents are required to submit initial notifications, conduct performance tests, and submit periodic reports. They are also required to maintain records of the occurrence and duration of any startup, shutdown, or malfunction in the operation of an affected facility; any period during which the monitoring system is inoperative; the production for unrefined lead, copper matte, and copper speiss; the date and times of bag leak detection system alarms and the corrective action taken; baghouse inspection and maintenance; any records required as part of the source standard operating procedures (SOP) manuals; and the compliance methods chosen. Reports, at a minimum, are required semiannually. These notifications, reports, and records are essential in determining compliance, and are required of all affected facilities subject to NESHAP.

An Agency may not conduct or sponsor, and a person is not required to respond to, a collection of information unless it displays a currently valid OMB Control Number. The OMB Control Numbers for EPA's regulations are listed in 40 CFR part 9 and 48 CFR chapter 15, and are identified on the form and/or instrument, if applicable.

Burden Statement: The annual public reporting and recordkeeping burden for this collection of information is estimated to average 3,048 hours per response. Burden means the total time, effort, or financial resources expended by persons to generate, maintain, retain, or disclose or provide information to or for a Federal agency. This includes the time needed to review instructions; develop, acquire, install, and utilize technology and systems for the purposes of collecting, validating, and verifying information, processing and maintaining information, and disclosing and providing information; adjust the existing ways to comply with any previously applicable instructions and requirements which have subsequently changed; train personnel to be able to respond to a collection of information; search data sources; complete and review the collection of information; and transmit or otherwise disclose the information.

Respondents/Affected Entities: Primary lead smelters including sinter machine, blast furnace, dross furnace, process fugitive, and fugitive dust sources.

Estimated Number of Respondents: 2.

Frequency of Response: Initially, occasionally, semi-annually, and yearly.

Estimated Total Annual Hour Burden: 12,190.

Estimated Total Annual Cost: $1,003,082, which includes $984,082 in Labor costs, $19,000 in O&M costs, and no annualized capital/start-up costs.

Changes in the Estimates: There is no change in the total estimated burden currently identified in the OMB Inventory of Approved ICR Burdens.

Dated: December 3, 2008.

John Moses,

Acting Director, Collection Strategies Division.

[FR Doc. E8–29229 Filed 12–9–08; 8:45 am]

BILLING CODE 6560–50–P

ENVIRONMENTAL PROTECTION AGENCY

[EPA–HQ–OECA–2008–0301; FRL–8749–7]

Agency Information Collection Activities; Submission to OMB for Review and Approval; Comment Request; NESHAP for Steel Pickling, HCl Process Facilities and Hydrochloric Acid Regeneration Plants (Renewal), EPA ICR Number 1821.06, OMB Control Number 2060–0419

AGENCY: Environmental Protection Agency (EPA).

ACTION: Notice.

SUMMARY: In compliance with the Paperwork Reduction Act (44 U.S.C. 3501 *et seq.*), this document announces that an Information Collection Request (ICR) has been forwarded to the Office of Management and Budget (OMB) for review and approval. This is a request to renew an existing approved collection. The ICR which is abstracted below describes the nature of the collection and the estimated burden and cost.

DATES: Additional comments may be submitted on or before January 9, 2009.

ADDRESSES: Submit your comments, referencing docket ID number EPA–HQ–OECA–2008–0301, to (1) EPA online using *http://www.regulations.gov* (our preferred method), or by e-mail to *docket.oeca@epa.gov*, or by mail to: EPA Docket Center (EPA/DC), Environmental Protection Agency, Enforcement and Compliance Docket and Information Center, mail code 2201T, 1200 Pennsylvania Avenue, NW., Washington, DC 20460, and (2) OMB at: Office of Information and Regulatory Affairs, Office of Management and Budget (OMB), Attention: Desk Officer for EPA, 725 17th Street, NW., Washington, DC 20503.

FOR FURTHER INFORMATION CONTACT: Learia Williams, Compliance Assessment and Media Programs Division, Office of Compliance, Mail Code 2223A, Environmental Protection Agency, 1200 Pennsylvania Avenue, NW., Washington, DC 20460; telephone number: (202) 564–4113; fax number: (202) 564–0050; e-mail address: *williams.learia@epa.gov*.

SUPPLEMENTARY INFORMATION: EPA has submitted the following ICR to OMB for review and approval according to the procedures prescribed in 5 CFR 1320.12. On May 30, 2008 (73 *FR* 31088), EPA sought comments on this ICR pursuant to 5 CFR 1320.8(d). EPA received no comments. Any additional comments on this ICR should be submitted to EPA and OMB within 30 days of this notice.

EPA has established a public docket for this ICR under docket ID number EPA–HQ–OECA–2008–0301, which is available for public viewing online at *http://www.regulations.gov*, in person viewing at the Enforcement and Compliance Docket in the EPA Docket Center (EPA/DC), EPA West, Room 3334, 1301 Constitution Avenue, NW., Washington, DC. The EPA Docket Center Public Reading Room is open from 8:30 a.m. to 4:30 p.m., Monday through Friday, excluding legal holidays. The telephone number for the Reading Room is (202) 566–1744, and the telephone number for the Enforcement and Compliance Docket is (202) 566–1927.

Use EPA's electronic docket and comment system at *http://www.regulations.gov*, to submit or view public comments, access the index listing of the contents of the docket, and to access those documents in the docket that are available electronically. Once in the system, select ''docket search,'' then key in the docket ID number identified above. Please note that EPA's policy is that public comments, whether submitted electronically or in paper will be made available for public viewing at *http://www.regulations.gov*, as EPA receives them and without change, unless the comment contains

copyrighted material, Confidential Business Information (CBI), or other information whose public disclosure is restricted by statute. For further information about the electronic docket, go to *http://www.regulations.gov*.

Title: NESHAP for Steel Pickling, HCl Process Facilities and Hydrochloric Acid Regeneration Plants (Renewal)

ICR Numbers: EPA ICR Number 1821.06, OMB Control Number 2060–0419.

ICR Status: This ICR is schedule to expire on February 28, 2009. Under OMB regulations, the Agency may continue to conduct or sponsor the collection of information while this submission is pending at OMB. An Agency may not conduct or sponsor, and a person is not required to respond to, a collection of information unless it displays a currently valid OMB control number. The OMB control numbers for EPA's regulations in title 40 of the CFR, after appearing in the **Federal Register** when approved, are listed in 40 CFR part 9, and displayed either by publication in the **Federal Register** or by other appropriate means, such as on the related collection instrument or form, if applicable. The display of OMB control numbers in certain EPA regulations is consolidated in 40 CFR part 9.

Abstract: The National Emission Standards for Hazardous Air Pollutants (NESHAP) for Steel Pickling, HCl Process Facilities and Hydrochloric Acid Regeneration Plants published at 40 CFR part 63, subpart CCC, were proposed on September 18, 1997 (62 *FR* 49051) and promulgated on June 22, 1999 (64 *FR* 33202). This rule applies to all facilities that pickle steel using hydrochloric acid or regenerate hydrochloric acid, and are major sources or are part of a facility that is a major source. This regulation does not apply to any pickling line that uses an acid other than hydrochloric acid or an acid solution containing less than 6 percent HCl or at a temperature less than 100 degrees (Fahrenheit). This rulemaking establishes limits for hydrochloric acid emissions from continuous and batch pickling lines and acid regeneration units and limits for chlorine emissions from acid regeneration units. Also, operational and equipment standards are established for stationary acid storage vessels.

The monitoring, recordkeeping, and reporting requirements outlined in the rule are similar to those required for other NESHAP regulations. Consistent with the NESHAP General Provisions (40 CFR part 63, subpart A), respondents would submit one-time notifications of applicability and a one-time report on performance test results for the primary emission control device. Plants also must develop and implement a startup, shutdown, and malfunction plan (SSMP) and submit semiannual reports of any event where the procedures in the plan were not followed. Sources are required to submit semiannual reports at all times including for periods of monitoring exceedances and periods of compliance certifying that no exceedances have occurred. NESHAP 40 CFR part 60, subpart CCC, also requires the owner or operator to submit a written maintenance plan for each emission control device. These notifications, reports, and records are essential in determining compliance, and are required of all sources subject to NESHAP.

Any owner or operator subject to the provisions of this part shall maintain a file of these measurements, and retain the file for at least five years following the date of such measurements, maintenance reports, and records.

All reports are sent to the delegated state or local authority. In the event that there is no such delegated authority, the reports are sent directly to the EPA regional office. This information is being collected to assure compliance with 40 CFR part 60, subpart CCC, as authorized in sections 112 and 114(a) of the Clean Air Act. The required information consists of emissions data and other information that have been determined to be private.

An Agency may not conduct or sponsor, and a person is not required to respond to, a collection of information unless it displays a currently valid OMB Control Number. The OMB Control Numbers for EPA's regulations listed in 40 CFR part 9 and 48 CFR chapter 15, are identified on the form and/or instrument, if applicable.

Burden Statement: The annual public reporting and recordkeeping burden for this collection of information is estimated to average 168 hours per response. Burden means the total time, effort, or financial resources expended by persons to generate, maintain, retain, or disclose and provide information to or for a Federal agency. This includes the time needed to review instructions; develop, acquire, install, and utilize technology and systems for the purposes of collecting, validating, and verifying information, processing and maintaining information, and disclosing and providing information. All existing ways will have to adjust to comply with any previously applicable instructions and requirements that have subsequently changed; train personnel to be able to respond to a collection of information; search data sources; complete and review the collection of information; and transmit or otherwise disclose the information.

Respondents/Affected Entities: Steel pickling, HCl process facilities and hydrochloric acid regeneration plants.

Estimated Number of Respondents: 72.

Frequency of Response: Initially, occasionally and semiannually.

Estimated Total Annual Hour Burden: 25,316.

Estimated Total Annual Cost: $2,283,406, which includes: $2,275,774 in Labor costs, $7,632 in O&M costs, and no capital costs.

Changes in the Estimates: The decrease in labor hours from the most recently approved ICR from 25,448 to 25,316 hours is due to a decrease in the number of new or modified sources. Based on our discussions with the steel industry representatives, the steel industry and the steel pickling, in particular, will be experiencing essentially a flat production in the coming years with no new facilities anticipated. There is an increase in the labor cost burden, which is due to an updating of the labor rates.

There is a decrease in the capital/startup and operations and maintenance (O&M) costs from the previous ICR, which is due to the decrease in the number of new or modified sources and an adjustment for rounding-up in the previous ICR.

Dated: December 3, 2008.

John Moses,

Acting Director, Collection Strategies Division.

[FR Doc. E8–29230 Filed 12–9–08; 8:45 am]

BILLING CODE 6560–50–P

ENVIRONMENTAL PROTECTION AGENCY

[EPA–HQ–OPP–2008–0480 ; FRL–8379–5]

Agency Information Collection Activities; Proposed Renewal and Consolidation of Several Currently Approved Collections; Comment Request; Pesticide Registration Fees Program; EPA ICR No. 2330.01, OMB Control No. 2070–new

AGENCY: Environmental Protection Agency (EPA).

ACTION: Notice.

SUMMARY: In compliance with the Paperwork Reduction Act (PRA) (44 U.S.C. 3501 *et seq.*), this document announces that EPA is planning to submit a request to renew and

consolidate several existing approved Information Collection Requests (ICRs) to the Office of Management and Budget (OMB). Before submitting the consolidated ICR to OMB for review and approval, EPA is soliciting comments on specific aspects of this information collection. The consolidated ICR, entitled: ''Pesticide Registration Fees Program'' and identified by EPA ICR No. 2330.01 and OMB Control No. 2070–new, will consolidate the following currently approved ICRs: ''Product Registration Maintenance Fees'' (EPA ICR No. 1214.07, OMB Control No. 2070–0100) and ''Pesticide Registration Fee Waivers (PRIA)'' (EPA ICR No. 2147.03, OMB Control No. 2070–0167).

DATES: Comments must be received on or before February 9, 2009.

ADDRESSES: Submit your comments, identified by docket identification (ID) number EPA–HQ–OPP–2008–0480, by one of the following methods:

- *Federal Portal*: *http://www.regulations.gov*. Follow the on-line instructions for submitting comments.
- *Mail*: Office of Pesticide Programs (OPP) Regulatory Public Docket (7502P), Environmental Protection Agency, 1200 Pennsylvania Ave., NW., Washington, DC 20460–0001.
- *Delivery*: OPP Regulatory Public Docket (7502P), Environmental Protection Agency, Rm. S–4400, One Potomac Yard (South Bldg.), 2777 S. Crystal Dr., Arlington, VA. Deliveries are only accepted during the Docket's normal hours of operation (8:30 a.m. to 4 p.m., Monday through Friday, excluding legal holidays). Special arrangements should be made for deliveries of boxed information. The Docket Facility telephone number is (703) 305–5805.

Instructions: Direct your comments to docket ID number EPA–HQ–OPP–2008–0480. EPA's policy is that all comments received will be included in the docket without change and may be made available on-line at *http://www.regulations.gov*, including any personal information provided, unless the comment includes information claimed to be Confidential Business Information (CBI) or other information whose disclosure is restricted by statute. Do not submit information that you consider to be CBI or otherwise protected through regulations.gov or e-mail. The regulations.gov website is an ''anonymous access'' system, which means EPA will not know your identity or contact information unless you provide it in the body of your comment. If you send an e-mail comment directly to EPA without going through regulations.gov, your e-mail address will be automatically captured and included as part of the comment that is placed in the docket and made available on the Internet. If you submit an electronic comment, EPA recommends that you include your name and other contact information in the body of your comment and with any disk or CD-ROM you submit. If EPA cannot read your comment due to technical difficulties and cannot contact you for clarification, EPA may not be able to consider your comment. Electronic files should avoid the use of special characters, any form of encryption, and be free of any defects or viruses.

Docket: All documents in the docket are listed in the docket index available in *http://www.regulations.gov*. Although listed in the index, some information is not publicly available, e.g., CBI or other information whose disclosure is restricted by statute. Certain other material, such as copyrighted material, is not placed on the Internet and will be publicly available only in hard copy form. Publicly available docket materials are available either in the electronic docket at *http://www.regulations.gov*, or, if only available in hard copy, at the OPP Regulatory Public Docket in Rm. S–4400, One Potomac Yard (South Bldg.), 2777 S. Crystal Dr., Arlington, VA. The hours of operation of this Docket Facility are from 8:30 a.m. to 4 p.m., Monday through Friday, excluding legal holidays. The Docket Facility telephone number is (703) 305–5805.

FOR FURTHER INFORMATION CONTACT: Rame Cromwell, Field and External Affairs Division (7506P), Office of Pesticide Programs, Environmental Protection Agency, 1200 Pennsylvania Ave., NW., Washington, DC 20460–0001; telephone number: (703) 308–9068; fax number: (703) 305–5884; e-mail address: *cromwell.rame@epa.gov*.

SUPPLEMENTARY INFORMATION:

I. What Information is EPA Particularly Interested in?

Pursuant to section 3506(c)(2)(A) of PRA, EPA specifically solicits comments and information to enable it to:

1. Evaluate whether the proposed collection of information is necessary for the proper performance of the functions of the Agency, including whether the information will have practical utility.

2. Evaluate the accuracy of the Agency's estimates of the burden of the proposed collection of information, including the validity of the methodology and assumptions used.

3. Enhance the quality, utility, and clarity of the information to be collected.

4. Minimize the burden of the collection of information on those who are to respond, including through the use of appropriate automated electronic, mechanical, or other technological collection techniques or other forms of information technology, e.g., permitting electronic submission of responses. In particular, EPA is requesting comments from very small businesses (those that employ less than 25) on examples of specific additional efforts that EPA could make to reduce the paperwork burden for very small businesses affected by this collection.

II. What Should I Consider when I Prepare My Comments for EPA?

You may find the following suggestions helpful for preparing your comments:

1. Explain your views as clearly as possible and provide specific examples.
2. Describe any assumptions that you used.
3. Provide copies of any technical information and/or data you used that support your views.
4. If you estimate potential burden or costs, explain how you arrived at the estimate that you provide.
5. Provide specific examples to illustrate your concerns.
6. Offer alternative ways to improve the collection activity.
7. Make sure to submit your comments by the deadline identified under **DATES**.
8. To ensure proper receipt by EPA, be sure to identify the docket ID number assigned to this action in the subject line on the first page of your response. You may also provide the name, date, and **Federal Register** citation.

III. What Do I Need to Know About PRA?

An Agency may not conduct or sponsor, and a person is not required to respond to, a collection of information subject to PRA approval unless it displays a currently valid OMB control number. The OMB control numbers for EPA's regulations in title 40 of the Code of Federal Regulations (CFR), after appearing in the preamble of the final rule, are further displayed either by publication in the **Federal Register** or by other appropriate means, such as on the related collection instruments or form, if applicable. The display of OMB control numbers for certain EPA regulations is consolidated in a list at 40 CFR 9.1.

PRA defines *burden* to mean the total time, effort, or financial resources

expended by persons to generate, maintain, retain, or disclose or provide information to or for a Federal agency. This includes the time needed to review instructions; develop, acquire, install, and utilize technology and systems for the purposes of collecting, validating, and verifying information, processing and maintaining information, and disclosing and providing information; adjust the existing ways to comply with any previously applicable instructions and requirements which have subsequently changed; train personnel to be able to respond to a collection of information; search data sources; complete and review the collection of information; and transmit or otherwise disclose the information.

IV. What ICR Does this Request Apply to?

Title: Pesticide Registration Fees Program.

ICR numbers: EPA ICR No. 2330.01, OMB Control No. 2070–new.

ICR status: This ICR reflects the consolidation of the following currently approved ICRs: ''Product Registration Maintenance Fees'' (EPA ICR No. 1214.07, OMB Control No. 2070–0100; scheduled to expire on November 30, 2010) and ''Pesticide Registration Fee Waivers (PRIA)'' (EPA ICR No. 2147.03, OMB Control No. 2070–0167; scheduled to expire on October 31, 2010).

Affected entities: Entities potentially affected by this ICR are pesticide registrants holding currently active registrations under the Federal Insecticide, Fungicide, and Rodenticide Act (FIFRA) section 3 and section 24(c), which are subject to this information collection activity. These include pesticide companies and state governments, which may be identified by pesticide and other agricultural chemical manufacturing (North American Industrial Classification System (NAICS) code 325320) and regulation of agricultural marketing and commodities (NAICS code 9641).

Abstract: The proposed consolidation information collection reports the paperwork burden hours and costs for State initiated under either Pesticide Registration Fee Waivers (PRIA) or Pesticide Product Registration Maintenance Fee. PRIA authorizes EPA to process requests for waivers of fees. The ICR covers the collection activities associated with requesting a fee waiver and involves requesters submitting a waiver request, information to demonstrate eligibility for the waiver, and certification of eligibility. Waivers are available for small businesses, for minor uses, and for actions solely associated with the Inter-Regional Project Number 4 (IR–4). State and Federal agencies are exempt from the payment of fees. Maintenance fees are collected from pesticides registrants as required by law. Respondents complete and submit EPA Form 8570–30 indicating the respondent's liability for the registration maintenance fee. Annually the Agency provides registrants a list of the registered products currently registered with the Agency. Registrants are provided the opportunity to review the list, determine its accuracy, and remit payment of maintenance fee. The list of products has space identified for making those products to be supported and those products that are to be cancelled. The registrants are also instructed to identify any products on the list which they believe to be transferred to another company and to add to the list any products which the company believes to be registered that are not the Agency-provided list. The failure to pay the required fee for a product will result in cancellation of that product's registration.

Burden statement: The annual public reporting and recordkeeping burden for this collection of information is estimated to average a combined 2,109 hours annually. The consolidated ICR, a copy of which is available in the docket, provides a detailed explanation of this estimate, which is only briefly summarized here:

Estimated total number of potential respondents: 2,109.

Frequency of response: Annual.

Estimated total average number of responses for each respondent: 1.

Estimated total annual burden hours: 10,013 hours.

Estimated total annual costs: $647,703. This ICR does not involve any capital investment or maintenance and operational costs.

V. Are There Changes in the Estimates from the Last Approvals?

The consolidation of these ICRs will not result in a change of the 10,013 hours in the total estimated combined respondent burden that is currently approved by OMB.

VI. What is the Next Step in the Process for this ICR?

EPA will consider the comments received and amend the consolidated ICR as appropriate. The final ICR package will then be submitted to OMB for review and approval pursuant to 5 CFR 1320.12. EPA will issue another **Federal Register** notice pursuant to 5 CFR 1320.5(a)(1)(iv) to announce the submission of the ICR to OMB and the opportunity for the public to submit additional comments for OMB consideration.

If you have any questions about this ICR or the approval process, please contact the person listed under **FOR FURTHER INFORMATION CONTACT**.

List of Subjects

Environmental protection, Reporting and recordkeeping requirements.

Dated: December 2, 2008.

James B. Gulliford,

Assistant Administrator, Office of Prevention, Pesticides and Toxic Substances.

[FR Doc. E8–29219 Filed 12–9–08; 8:45 am]

BILLING CODE 6560–50–S

ENVIRONMENTAL PROTECTION AGENCY

[EPA–HQ–OPP–2008–0651; FRL–8389–7]

Agency Information Collection Activities; Proposed Collection; Comment Request; Notice of Pesticide Registration by States to Meet a Special Local Need (SLN) under FIFRA Section 24(c); EPA ICR No. 0595.10, OMB Control No. 2070–0055

AGENCY: Environmental Protection Agency (EPA).

ACTION: Notice.

SUMMARY: In compliance with the Paperwork Reduction Act (PRA) (44 U.S.C. 3501 *et seq.*), this document announces that EPA is planning to submit a request to renew an existing approved Information Collection Request (ICR) to the Office of Management and Budget (OMB). This ICR, entitled: ''Notice of Pesticide Registration by States to Meet a Special Local Need (SLN) under FIFRA Section 24(c)'' and identified by EPA ICR No. 0595.10 and OMB Control No. 2070–0055, is scheduled to expire on August 31, 2009. Before submitting the ICR to OMB for review and approval, EPA is soliciting comments on specific aspects of the proposed information collection.

DATES: Comments must be received on or before February 9, 2009.

ADDRESSES: Submit your comments, identified by docket identification (ID) number EPA–HQ–OPP–2008–0651, by one of the following methods:

- *Federal eRulemaking Portal*: *http://www.regulations.gov*. Follow the on-line instructions for submitting comments.
- *Mail*: Office of Pesticide Programs (OPP) Regulatory Public Docket (7502P), Environmental Protection Agency, 1200 Pennsylvania Ave., NW., Washington, DC 20460–0001.
- *Delivery*: OPP Regulatory Public Docket (7502P), Environmental

Protection Agency, Rm. S–4400, One Potomac Yard (South Bldg.), 2777 S. Crystal Dr., Arlington, VA. Deliveries are only accepted during the Docket Facility's normal hours of operation (8:30 a.m. to 4 p.m., Monday through Friday, excluding legal holidays). Special arrangements should be made for deliveries of boxed information. The Docket Facility telephone number is (703) 305–5805.

Instructions: Direct your comments to docket ID number EPA–HQ–OPP–2008–0651. EPA's policy is that all comments received will be included in the docket without change and may be made available on-line at *http://www.regulations.gov*, including any personal information provided, unless the comment includes information claimed to be Confidential Business Information (CBI) or other information whose disclosure is restricted by statute. Do not submit information that you consider to be CBI or otherwise protected through regulations.gov or e-mail. The regulations.gov website is an ''anonymous access'' system, which means EPA will not know your identity or contact information unless you provide it in the body of your comment. If you send an e-mail comment directly to EPA without going through regulations.gov, your e-mail address will be automatically captured and included as part of the comment that is placed in the docket and made available on the Internet. If you submit an electronic comment, EPA recommends that you include your name and other contact information in the body of your comment and with any disk or CD-ROM you submit. If EPA cannot read your comment due to technical difficulties and cannot contact you for clarification, EPA may not be able to consider your comment. Electronic files should avoid the use of special characters, any form of encryption, and be free of any defects or viruses.

Docket: All documents in the docket are listed in the docket index available at *http://www.regulations.gov*. Although listed in the index, some information is not publicly available, e.g., CBI or other information whose disclosure is restricted by statute. Certain other material, such as copyrighted material, is not placed on the Internet and will be publicly available only in hard copy form. Publicly available docket materials are available either in the electronic docket at *http://www.regulations.gov*, or, if only available in hard copy, at the OPP Regulatory Public Docket in Rm. S–4400, One Potomac Yard (South Bldg.), 2777 S. Crystal Dr., Arlington, VA. The hours of operation of this Docket Facility are from 8:30 a.m. to 4 p.m., Monday through Friday, excluding legal holidays. The Docket Facility telephone number is (703) 305–5805.

FOR FURTHER INFORMATION CONTACT:

Nathanael R. Martin, Field and External Affairs Division (7506P), Office of Pesticide Programs, Environmental Protection Agency, 1200 Pennsylvania Ave., NW., Washington, DC 20460–0001; telephone number: (703) 305–6475; fax number: (703) 305–5884; e-mail address: *martin.nathanael@epa.gov*.

SUPPLEMENTARY INFORMATION:

I. What Information is EPA Particularly Interested in?

Pursuant to section 3506(c)(2)(A) of PRA, EPA specifically solicits comments and information to enable it to:

1. Evaluate whether the proposed collection of information is necessary for the proper performance of the functions of the Agency, including whether the information will have practical utility.
2. Evaluate the accuracy of the Agency's estimates of the burden of the proposed collection of information, including the validity of the methodology and assumptions used.
3. Enhance the quality, utility, and clarity of the information to be collected.
4. Minimize the burden of the collection of information on those who are to respond, including through the use of appropriate automated electronic, mechanical, or other technological collection techniques or other forms of information technology, e.g., permitting electronic submission of responses. In particular, EPA is requesting comments from very small businesses (those that employ less than 25) on examples of specific additional efforts that EPA could make to reduce the paperwork burden for very small businesses affected by this collection.

II. What Should I Consider when I Prepare My Comments for EPA?

You may find the following suggestions helpful for preparing your comments:

1. Explain your views as clearly as possible and provide specific examples.
2. Describe any assumptions that you used.
3. Provide copies of any technical information and/or data you used that support your views.
4. If you estimate potential burden or costs, explain how you arrived at the estimate that you provide.
5. Provide specific examples to illustrate your concerns.
6. Offer alternative ways to improve the collection activity.
7. Make sure to submit your comments by the deadline identified under **DATES**.
8. To ensure proper receipt by EPA, be sure to identify the docket ID number assigned to this action in the subject line on the first page of your response. You may also provide the name, date, and **Federal Register** citation.

III. What Information Collection Activity or ICR Does this Action Apply to?

Affected entities: Entities potentially affected by this ICR are state and territorial government involved in issuing pesticide registrations (e.g., administration of air and water resources and solid waste management programs (North American Industrial Classification System (NAICS) code 92411). This listing is not intended to be exhaustive, but rather provides a guide for readers regarding entities likely to be affected by this action. Other types of entities not listed above could also be affected. The NAICS code has been provided to assist you and others in determining whether this action might apply to certain entities. To determine whether you or your business may be affected by this action, you should carefully examine the provisions in 40 CFR 162.150.

Title: Notice of Pesticide Registration by States to Meet a Special Local Need (SLN) under FIFRA Section 24(c).

ICR numbers: EPA ICR No. 0595.10, OMB Control No. 2070–0055.

ICR status: This ICR is currently scheduled to expire on August 31, 2009. An Agency may not conduct or sponsor, and a person is not required to respond to, a collection of information, unless it displays a currently valid OMB control number. The OMB control numbers for EPA's regulations in title 40 of the Code of Federal Regulations (CFR), after appearing in the **Federal Register** when approved, are listed in 40 CFR part 9, are displayed either by publication in the **Federal Register** or by other appropriate means, such as on the related collection instrument or form, if applicable. The display of OMB control numbers for certain EPA regulations is consolidated in 40 CFR part 9.

Abstract: This data collection program is designed to provide EPA with the necessary data to review approval of State-issued pesticide registrations. The Federal Insecticide, Fungicide, and Rodenticide Act (FIFRA), section 24(c) authorizes the States to register additional uses of federally registered pesticides for distribution and use within the State to meet a SLN. A State-

issued registration under FIFRA section 24(c) is deemed a federal registration for the purposes of the pesticide's use within the State's boundaries. A State must notify EPA, in writing, of any action it takes, i.e., when it issues, amends, or revokes a State registration. The Agency has 90 days to disapprove the registration. In such cases, the State is responsible for notifying the affected registrant. Pursuant to subpart D of 40 CFR part 162, reponses to this collection of information are mandatory.

Burden statement: The annual public reporting and recordkeeping burden for this collection of information is estimated to average 52 hours per response. Burden means the total time, effort, or financial resources expended by persons to generate, maintain, retain, or disclose or provide information to or for a Federal agency. This includes the time needed to review instructions; develop, acquire, install, and utilize technology and systems for the purposes of collecting, validating, and verifying information, processing and maintaining information, and disclosing and providing information; adjust the existing ways to comply with any previously applicable instructions and requirements which have subsequently changed; train personnel to be able to respond to a collection of information; search data sources; complete and review the collection of information; and transmit or otherwise disclose the information.

The ICR provides a detailed explanation of this estimate, which is only briefly summarized here:

Estimated total number of potential respondents: 60.

Frequency of response: On occasion.

Estimated total average number of responses for each respondent: 11–12.

Estimated total annual burden hours: 35,828 hours.

Estimated total annual costs: $2,383,251.

IV. Are There Changes in the Estimates from the Last Approval?

There is an increase of 12,428 hours in the total estimated respondent burden compared with that identified in the ICR currently approved by OMB. This increase reflects the increase in average annual number of applications from 2005–2007. This change is an adjustment.

V. What is the Next Step in the Process for this ICR?

EPA will consider the comments received and amend the ICR as appropriate. The final ICR package will then be submitted to OMB for review and approval pursuant to 5 CFR 1320.12. EPA will issue another **Federal Register** notice pursuant to 5 CFR 1320.5(a)(1)(iv) to announce the submission of the ICR to OMB and the opportunity to submit additional comments to OMB. If you have any questions about this ICR or the approval process, please contact the person listed under **FOR FURTHER INFORMATION CONTACT**.

List of Subjects

Environmental protection, Reporting and recordkeeping requirements.

Dated: December 2, 2008.

James B. Gulliford,

Assistant Administrator, Office of Prevention, Pesticides and Toxic Substances.

[FR Doc. E8–29224 Filed 12–9–08; 8:45 am]

BILLING CODE 6560–50–S

ENVIRONMENTAL PROTECTION AGENCY

[EPA–HQ–RCRA–2008–0330; FRL–8749–8]

Agency Information Collection Activities; Submission to OMB for Review and Approval; Comment Request; Information Collections under the Schools Chemical Cleanout Campaign (SC3)(New); EPA ICR No. 2285.01, OMB Control No. 2050–NEW

AGENCY: Environmental Protection Agency (EPA).

ACTION: Notice.

SUMMARY: In compliance with the Paperwork Reduction Act (PRA) (44 U.S.C. 3501 *et seq.*), this document announces that an Information Collection Request (ICR) has been forwarded to the Office of Management and Budget (OMB) for review and approval. This is a request for a new collection. The ICR, which is abstracted below, describes the nature of the information collection and its estimated burden and cost.

DATES: Additional comments may be submitted on or before January 9, 2009.

ADDRESSES: Submit your comments, referencing Docket ID No. EPA–HQ–RCRA–2008–0330, to (1) EPA, either online using *http://www.regulations.gov* (our preferred method), or by e-mail to *rcra-docket@epa.gov*, or by mail to: Resource Conservation and Recovery Act (RCRA) Docket (Mail code: 28221T), U.S. Environmental Protection Agency, 1200 Pennsylvania Ave., NW., Washington, DC 20460; and (2) OMB by mail to: Office of Information and Regulatory Affairs, Office of Management and Budget (OMB), Attention: Desk Officer for EPA, 725 17th Street, NW., Washington, DC 20503.

FOR FURTHER INFORMATION CONTACT: Cynthia Merse, Hazardous Waste Minimization and Management Division, Office of Solid Waste (Mail code: 5302P), Environmental Protection Agency, 1200 Pennsylvania Ave., NW., Washington, DC 20460; telephone number: 703–308–0020; fax number: 703–308–8433; e-mail address: *merse.cynthia@epa.gov*.

SUPPLEMENTARY INFORMATION: EPA has submitted the following ICR to OMB for review and approval according to the procedures prescribed in 5 CFR 1320.12. On June 18, 2008, (73 *FR* 34731), EPA sought comments on this ICR pursuant to 5 CFR 1320.8(d). EPA received no comments during the comment period. Any additional comments on this ICR should be submitted to EPA and OMB within 30 days of this notice.

EPA has established a public docket for this ICR under Docket ID No. EPA–HQ–RCRA–2008–0330, which is available for online viewing at *http://www.regulations.gov*, or in person viewing at the RCRA Docket in the EPA Docket Center (EPA/DC), EPA West, Room 3334, 1301 Constitution Ave., NW., Washington, DC. The EPA/DC Public Reading Room is open from 8:30 a.m. to 4:30 p.m., Monday through Friday, excluding legal holidays. The telephone number for the Reading Room is 202–566–1744, and the telephone number for the RCRA Docket is 202–566–0270.

Use EPA's electronic docket and comment system at *http://www.regulations.gov* to submit or view public comments, to access the index listing of the contents of the docket, and to access those documents in the docket that are available electronically. Once in the system, select ''docket search,'' then key in the docket ID number identified above. Please note that EPA's policy is that public comments, whether submitted electronically or in paper, will be made available for public viewing at *http://www.regulations.gov* as EPA receives them and without change, unless the comment contains copyrighted material, Confidential Business Information (CBI), or other information whose public disclosure is restricted by statute. For further information about the electronic docket, go to *http://www.regulations.gov*.

Title: Information Collections under the Schools Chemical Cleanout Campaign (SC3)(New).

ICR Number: EPA ICR No. 2285.01, OMB Control No. 2050–NEW.

ICR Status: This ICR is for a new information collection activity. An

Agency may not conduct or sponsor, and a person is not required to respond to, a collection of information, unless it displays a currently valid OMB control number. The OMB control numbers for EPA's regulations in Title 40 of the CFR, after appearing in the **Federal Register** when approved, are listed in 40 CFR Part 9 and are displayed either by publication in the **Federal Register** or by other appropriate means, such as on the related collection instrument or form, if applicable. The display of OMB control numbers in certain EPA regulations is consolidated in 40 CFR Part 9.

Abstract: EPA launched the National Schools Chemical Cleanout Campaign (SC3) Program in March of 2007. The SC3 Program uses a variety of innovative approaches to achieve three goals: (1) Removal of outdated and dangerous chemicals from K–12 schools; (2) prevention of future accumulations of chemicals and reduction of accidents by establishing prevention activities such as good purchasing and management practices; and, (3) raising national awareness of the problem.

One of the ways that EPA accomplishes its goals under SC3 is by partnering with organizations that volunteer to assist schools in the management of the schools' chemicals and the removal of schools' chemical waste. There are currently eleven Partners.

EPA intends to conduct a voluntary survey of Partners each year to learn about their experiences and needs under the Program. EPA has created two survey forms for this purpose: an Initial Survey and an Annual Update. The Initial Survey will be completed by Partners who are participating in the SC3 Survey for their first time. It is designed to give EPA a general idea of a Partner's background, accomplishments, and needs under SC3. Partners will complete the Annual Update in each subsequent year of their partnership. The Annual Update is designed to describe a Partner's accomplishments and needs since the previous year's survey. Partners can submit completed surveys by e-mail, postal mail, special delivery, or fax. EPA will use the survey data to further develop and improve the Program (e.g., improve its outreach efforts, encourage greater participation, and address resource needs of Partners) and communicate with the public (e.g., share Partners' success stories at the SC3 Web site).

In addition, EPA is interested in promoting the responsible management of chemicals in K–12 schools. To this end, EPA intends to hold three focus groups as part of an effort to gather information about the extent to which colleges and universities are teaching pre-service teachers about responsible chemical management. If EPA finds that a need exists to promote pre-service teacher training on responsible chemical management, EPA will gather feedback from the focus groups for the development and promotion of a curriculum on responsible chemical management that can serve as a model for colleges and universities.

Each focus group will consist of up to nine individuals from industry, educational institutions (e.g., faculty, students), and governmental agencies. During the focus groups, EPA will raise questions and collect feedback from focus group members.

Burden Statement: The annual public reporting burden for the SC3 Survey is estimated to range from 45 minutes to one hour per respondent. This includes time to complete and submit the survey and respond to EPA's follow-up questions, if any. There is no recordkeeping burden. The annual public reporting burden for the focus groups is estimated to be three hours per respondent. This includes time to attend and participate in the focus group. There is no recordkeeping burden. Burden means the total time, effort, or financial resources expended by persons to generate, maintain, retain, or disclose or provide information to or for a Federal agency. This includes the time needed to review instructions; develop, acquire, install, and utilize technology and systems for the purposes of collecting, validating, and verifying information, processing and maintaining information, and disclosing and providing information; adjust the existing ways to comply with any previously applicable instructions and requirements which have subsequently changed; train personnel to be able to respond to a collection of information; search data sources; complete and review the collection of information; and transmit or otherwise disclose the information.

Respondents/Affected Entities: Organizations that volunteer to partner with EPA under the SC3 Program.

Estimated Average Annual Number of Respondents: 42.

Frequency of Response: Annually or one-time.

Estimated Total Aggregate Annual Respondent Hour Burden: 56 hours.

Estimated Total Aggregate Annual Respondent Cost: $2,910. This includes an estimated labor cost of $2,896 and operation and maintenance cost of $14. There are no capital costs.

Changes in the Estimates: This is a new ICR. The annual burden of 56 hours reflects the time for respondents to participate in EPA's SC3 Survey and focus groups.

Dated: December 4, 2008.

John Moses,

Acting Director, Collection Strategies Division.

[FR Doc. E8–29234 Filed 12–9–08; 8:45 am]

BILLING CODE 6560–50–P

ENVIRONMENTAL PROTECTION AGENCY

[EPA–HQ–OPP–2003–0200; FRL–8389–8]

Fenamiphos; Amendment to Use Deletion and Product Cancellation Order

AGENCY: Environmental Protection Agency (EPA).

ACTION: Notice.

SUMMARY: This notice announces EPA's amendment to the order for the cancellation of products, voluntarily requested by the registrant and accepted by the Agency, of products containing the pesticide fenamiphos, pursuant to section 6(f)(1) of the Federal Insecticide, Fungicide, and Rodenticide Act (FIFRA), as amended. This amendment follows a June 11, 2008 **Federal Register** Amendment to Use Deletion and Product Cancellation Order which extended the deadline for persons other than the registrant to sell and distribute two fenamiphos products, Nemacur 10% Turf and Ornamental Nematicide (EPA Reg. No. 432–1291) and Nemacur 3 Emulsifiable Systemic Insecticide-Nematicide (EPA Reg. No. 264–731), from May 31, 2008, until November 30, 2008. These are the last fenamiphos products registered for use in the United States. The Agency subsequently received a request from an end user to extend the sale and distribution deadline for Nemacur 3. The Agency will extend the deadline for persons other than the registrant to sell and distribute Nemacur 3 Emulsifiable Systemic Insecticide-Nematicide (EPA Reg. No. 264–731) until March 31, 2009.

DATES: This amendment is effective December 10, 2008.

FOR FURTHER INFORMATION CONTACT: Eric Miederhoff, Special Review and Reregistration Division (7508P), Office of Pesticide Programs, Environmental Protection Agency, 1200 Pennsylvania Ave., NW., Washington, DC 20460–0001; telephone number: (703) 347–8028; fax number: (703) 308–7070; e-mail address: *miederhoff.eric@epa.gov*.

SUPPLEMENTARY INFORMATION:

I. General Information

A. Does this Action Apply to Me?

This action is directed to the public in general, and may be of interest to a wide range of stakeholders including environmental, human health, and agricultural advocates; the chemical industry; pesticide users; and members of the public interested in the sale, distribution, or use of pesticides. Since others also may be interested, the Agency has not attempted to describe all the specific entities that may be affected by this action. If you have any questions regarding the applicability of this action to a particular entity, consult the person listed under **FOR FURTHER INFORMATION CONTACT**.

B. How Can I Get Copies of this Document and Other Related Information?

1. *Docket*. EPA has established a docket for this action under docket identification (ID) number EPA–HQ–OPP–2003–0200. Publicly available docket materials are available either in the electronic docket at *http://www.regulations.gov*, or, if only available in hard copy, at the Office of Pesticide Programs (OPP) Regulatory Public Docket in Rm. S–4400, One Potomac Yard (South Bldg.), 2777 S. Crystal Dr., Arlington, VA. The hours of operation of this Docket Facility are from 8:30 a.m. to 4 p.m., Monday through Friday, excluding legal holidays. The Docket Facility telephone number is (703) 305–5805.

2. *Electronic access*. You may access this **Federal Register** document electronically through the EPA Internet under the **Federal Register** listings at*http://www.epa.gov/fedrgstr*.

II. What Action is the Agency Taking?

This notice announces the amendment of the June 11, 2008 amendment to the use deletion and product cancellation order of fenamiphos products registered under section 3 of FIFRA. The affected registration is listed by registration number in Table 1 of this unit.

TABLE 1.—FENAMIPHOS PRODUCT AFFECTED

EPA Registration Number	Product Name
264–731	Nemacur 3 Emulsifiable Systemic Insecticide-Nematicide

Table 2 of this unit includes the name and address of record for the registrant of the product in Table 1 of this unit, by EPA company number.

TABLE 2.—REGISTRANT OF AFFECTED PRODUCTS

EPA Company Number	Company Name and Address
264	Bayer CropScience 2 T.W. Alexander Drive P.O. Box 12014 Research Triangle Park, NC 27709

On December 10, 2003, EPA published a Use Deletion and Product Cancellation Order (68 FR 68901) (FRL–7332–5). The order prohibited, among other things, the manufacture and distribution of fenamiphos by Bayer Corporation, the sole technical ingredient registrant, after May 31, 2007. The deadline established for Bayer Corporation followed a production cap on the manufacture of fenamiphos, which limited fenamiphos production to 500,000 pounds of active ingredient for the year ending May 31, 2003, and reduced production by 20% each subsequent year during the 5–year phase-out period. The order also prohibited the sale and distribution of fenamiphos by persons other than the registrant after May 31, 2008.

In a June 11, 2008 **Federal Register** Amendment to Use Deletion and Product Cancellation Order, the Agency extended the May 31, 2008 deadline through November 30, 2008. This action was taken in response to a request from the sole fenamiphos technical registrant, Bayer Environmental Science, to extend the deadline to allow distributors to sell existing stockpiles of Nemacur 10% Turf and Ornamental Nematicide (EPA Reg. No. 432–1291) and Nemacur 3 Emulsifiable Systemic Insecticide-Nematicide (EPA Reg. No. 264–731) to end users.

On November 19, 2008, the Agency received a request from an end user, Maui Pineapple, to extend the deadline for sale and distribution of Nemacur 3 Emulsifiable Systemic Insecticide-Nematicide (EPA Reg. No. 264–731) from November 30, 2008, to March 31, 2009. The request stated that due to a substantial decrease in production, the end user would be unable to utilize their existing stocks of Nemacur 3. They requested the extension to enable them to sell their Nemacur 3 to a distributor who would in turn, sell and distribute the material to other end users.

In the case of fenamiphos, the original May 31, 2008 deadline was established to provide a reasonable amount of time for the material to work through the channels of trade following the cessation of sale and distribution of fenamiphos products by the registrant, Bayer Environmental Science, on May 31, 2007. Extending the deadline for distributors to sell and distribute Nemacur 3 Emulsifiable Systemic Insecticide-Nematicide will neither conflict with the Agency's application of the guidelines outlined in PR Notice 97–7, nor will it introduce more fenamiphos into the pesticide use cycle than had been stipulated by the terms of the 5–year phase-out. Allowing additional time for distributors to sell the Nemacur 3 to end users will ensure that this product is utilized in accordance with the approved labeling requirements. Today's action extends the deadline for persons other than the registrant to sell and distribute Nemacur 3 Emulsifiable Systemic Insecticide-Nematicide (EPA Reg. No. 264–731) for 4 months, until March 31, 2009. End users with existing stocks of products containing fenamiphos may continue to use these products until their stocks are exhausted, provided that the use complies with EPA-approved product label requirements for the respective products.

III. Amended Order

Pursuant to FIFRA section 6(a), EPA hereby amends the June 11, 2008 order to allow persons other than the registrant to sell and distribute the fenamiphos product identified in Table 1 of Unit II., until March 31, 2009. Accordingly, the Agency hereby orders that the sale and distribution of products containing fenamiphos is prohibited provided, however, that persons other than the registrant are permitted to sell and distribute existing stocks of Nemacur 3 Emulsifiable Systemic Insecticide-Nematicide (EPA Reg. No. 264–731) until March 31, 2009. The Agency further orders that end users with existing stocks of products containing fenamiphos may continue to use these products until their stocks are exhausted, provided that the use complies with EPA-approved product label requirements for the respective products.

IV. What is the Agency's Authority for Taking this Action?

Section 6(a)(1) of FIFRA provides that the Administrator may permit the continued sale and use of existing stocks of a pesticide whose registration is suspended or canceled under this section, or section 3 or 4, to such extent, under such conditions, and for such uses as the Administrator determines that such sale or use is not inconsistent with the purposes of this Act.

List of Subjects

Environmental protection, Pesticides and pests.

Dated: November 25, 2008.

Steven Bradbury,

Director, Special Review and Reregistration Division, Office of Pesticide Programs.

[FR Doc. E8–29223 Filed 12–9–08 8:45 am]

BILLING CODE 6560–50–S

ENVIRONMENTAL PROTECTION AGENCY

[EPA–HQ–OPP–2008–0836; FRL–8392–7]

FIFRA Scientific Advisory Panel; Notice of Public Meeting

AGENCY: Environmental Protection Agency (EPA).

ACTION: Notice.

SUMMARY: There will be a 3–day meeting of the Federal Insecticide, Fungicide, and Rodenticide Act Scientific Advisory Panel (FIFRA SAP) to consider and review a set of scientific issues being considered by the Agency pertaining an Evaluation of the Resistance Risks from Using a Seed Mix Refuge with Pioneer's Optimum® AcreMax™ 1 Corn Rootworm-Protected Corn.

DATES: The meeting will be held on Monday February 23, 2009 from 1:30 p.m. to 5 p.m.; and on Wednesday, February 25, 2009 from 8:30 a.m. to 12 noon (eastern time).

Comments. The Agency encourages that written comments be submitted by February 9, 2009 and requests for oral comments be submitted by February 16, 2009. However, written comments and requests to make oral comments may be submitted until the date of the meeting, but anyone submitting written comments after February 9, 2009 should contact the Designated Federal Official (DFO) listed under **FOR FURTHER INFORMATION CONTACT.** For additional instructions, see Unit I.C. of the **SUPPLEMENTARY INFORMATION**.

Nominations. Nominations of candidates to serve as ad hoc members of the FIFRA SAP for this meeting should be provided on or before December 24, 2008.

Special accommodations. For information on access or services for individuals with disabilities, and to request accommodation of a disability, please contact the DFO listed under **FOR FURTHER INFORMATION CONTACT** at least 10 days prior to the meeting to give EPA as much time as possible to process your request.

ADDRESSES: The meeting will be held at the Environmental Protection Agency, Conference Center, Lobby Level, One Potomac Yard (South Bldg.), 2777 S. Crystal Dr., Arlington, VA 22202.

Comments. Submit your comments, identified by docket identification (ID) number EPA–HQ–OPP–2008–0836, by one of the following methods:

- *Federal eRulemaking Portal*: *http://www.regulations.gov*. Follow the on-line instructions for submitting comments.
- *Mail*: Office of Pesticide Programs (OPP) Regulatory Public Docket (7502P), Environmental Protection Agency, 1200 Pennsylvania Ave., NW., Washington, DC 20460–0001.
- *Delivery*: OPP Regulatory Public Docket (7502P), Environmental Protection Agency, Rm. S–4400, One Potomac Yard (South Bldg.), 2777 S. Crystal Dr., Arlington, VA. Deliveries are only accepted during the Docket Facility's normal hours of operation 8:30 a.m. to 4 p.m., Monday through Friday, excluding legal holidays). Special arrangements should be made for deliveries of boxed information. The Docket Facility telephone number is (703) 305–5805.

Instructions. Direct your comments to docket ID number EPA–HQ–OPP–2008–0836. If your comments contain any information that you consider to be CBI or otherwise protected, please contact the DFO listed under **FOR FURTHER INFORMATION CONTACT** to obtain special instructions before submitting your comments. EPA's policy is that all comments received will be included in the docket without change and may be made available on-line at *http://www.regulations.gov*, including any personal information provided, unless the comment includes information claimed to be Confidential Business Information (CBI) or other information whose disclosure is restricted by statute. Do not submit information that you consider to be CBI or otherwise protected through regulations.gov or e-mail. The regulations.gov website is an ''anonymous access'' system, which means EPA will not know your identity or contact information unless you provide it in the body of your comment. If you send an e-mail comment directly to EPA without going through regulations.gov, your e-mail address will be automatically captured and included as part of the comment that is placed in the docket and made available on the Internet. If you submit an electronic comment, EPA recommends that you include your name and other contact information in the body of your comment and with any disk or CD-ROM you submit. If EPA cannot read your comment due to technical difficulties and cannot contact you for clarification, EPA may not be able to consider your comment. Electronic files should avoid the use of special characters, any form of encryption, and be free of any defects or viruses.

Docket: All documents in the docket are listed in the docket index available at *http://www.regulations.gov*. Although listed in the index, some information is not publicly available, e.g., CBI or other information whose disclosure is restricted by statute. Certain other material, such as copyrighted material, is not placed on the Internet and will be publicly available only in hard copy form. Publicly available docket materials are available either in the electronic docket at *http://www.regulations.gov*, or, if only available in hard copy, at the OPP Regulatory Public Docket in Rm. S–4400, One Potomac Yard (South Bldg.), 2777 S. Crystal Dr., Arlington, VA. The hours of operation of this Docket Facility are from 8:30 a.m. to 4 p.m., Monday through Friday, excluding legal holidays. The Docket Facility telephone number is (703) 305–5805.

Nominations, requests to present oral comments, and requests for special accommodations. Submit nominations to serve as ad hoc members of the FIFRA SAP, requests for special seating accommodations, or requests to present oral comments to the DFO listed under **FOR FURTHER INFORMATION CONTACT**.

FOR FURTHER INFORMATION CONTACT: Joseph E. Bailey, DFO, Office of Science Coordination and Policy (7201M), Environmental Protection Agency, 1200 Pennsylvania Ave., NW., Washington, DC 20460–0001; telephone number: (202) 564–2045; fax number: (202) 564–8382; e-mail addresses: *bailey.joseph@epa.gov*.

SUPPLEMENTARY INFORMATION:

I. General Information

A. Does this Action Apply to Me?

This action is directed to the public in general. This action may, however, be of interest to persons who are or may be required to conduct testing of chemical substances under the Federal Food, Drug, and Cosmetic Act (FFDCA), FIFRA, and the Food Quality Protection Act of 1996 (FQPA). Since other entities may also be interested, the Agency has not attempted to describe all the specific entities that may be affected by this action. If you have any questions regarding the applicability of this action to a particular entity, consult the DFO listed under **FOR FURTHER INFORMATION CONTACT**.

B. What Should I Consider as I Prepare My Comments for EPA?

When submitting comments, remember to:

1. Identify the document by docket ID number and other identifying information, subject heading, **Federal Register** date and page number.
2. Follow directions. The Agency may ask you to respond to specific questions or organize comments by referencing a Code of Federal Regulations (CFR) part or section number.
3. Explain why you agree or disagree; suggest alternatives and substitute language for your requested changes.
4. Describe any assumptions and provide any technical information and/or data that you used.
5. If you estimate potential costs or burdens, explain how you arrived at your estimate in sufficient detail to allow for it to be reproduced.
6. Provide specific examples to illustrate your concerns and suggest alternatives.
7. Explain your views as clearly as possible, avoiding the use of profanity or personal threats.
8. Make sure to submit your comments by the comment period deadline identified.

C. How May I Participate in this Meeting?

You may participate in this meeting by following the instructions in this unit. To ensure proper receipt by EPA, it is imperative that you identify docket ID number EPA–HQ–OPP–2008–0836; in the subject line on the first page of your request.

1. *Written comments.* The Agency encourages that written comments be submitted, using the instructions in **ADDRESSES**, no later than February 9, 2008, to provide the FIFRA SAP the time necessary to consider and review the written comments. Written comments are accepted until the date of the meeting, but anyone submitting written comments after February 9, 2008 should contact the DFO listed under **FOR FURTHER INFORMATION CONTACT.** Anyone submitting written comments at the meeting should bring 30 copies for distribution to the FIFRA SAP.

2. *Oral comments.* The Agency encourages that each individual or group wishing to make brief oral comments to the FIFRA SAP submit their request to the DFO listed under **FOR FURTHER INFORMATION CONTACT** no later than February 16, 2008, in order to be included on the meeting agenda. Requests to present oral comments will be accepted until the date of the meeting and, to the extent that time permits, the Chair of the FIFRA SAP may permit the presentation of oral comments at the meeting by interested persons who have not previously requested time. The request should identify the name of the individual making the presentation, the organization (if any) the individual will represent, and any requirements for audiovisual equipment (e.g., overhead projector, 35 mm projector, chalkboard). Oral comments before the FIFRA SAP are limited to approximately 5 minutes unless prior arrangements have been made. In addition, each speaker should bring 30 copies of his or her comments and presentation slides for distribution to the FIFRA SAP at the meeting.

3. *Seating at the meeting.* Seating at the meeting will be open and on a first-come basis.

4. *Request for nominations to serve as ad hoc members of the FIFRA SAP for this meeting.* As part of a broader process for developing a pool of candidates for each meeting, the FIFRA SAP staff routinely solicits the stakeholder community for nominations of prospective candidates for service as ad hoc members of the FIFRA SAP. Any interested person or organization may nominate qualified individuals to be considered as prospective candidates for a specific meeting. Individuals nominated for this meeting should have expertise in one or more of the following areas: Insect population genetics, corn rootworm biology and population dynamics, simulation modeling for pest resistance in Bt agricultural systems (preferably maize), and statistical analysis. Nominees should be scientists who have sufficient professional qualifications, including training and experience, to be capable of providing expert comments on the scientific issues for this meeting. Nominees should be identified by name, occupation, position, address, and telephone number. Nominations should be provided to the DFO listed under **FOR FURTHER INFORMATION CONTACT** on or before December 24, 2008. The Agency will consider all nominations of prospective candidates for this meeting that are received on or before this date. However, final selection of ad hoc members for this meeting is a discretionary function of the Agency.

The selection of scientists to serve on the FIFRA SAP is based on the function of the panel and the expertise needed to address the Agency's charge to the panel. No interested scientists shall be ineligible to serve by reason of their membership on any other advisory committee to a Federal department or agency or their employment by a Federal department or agency except the EPA. Other factors considered during the selection process include availability of the potential panel member to fully participate in the panel's reviews, absence of any conflicts of interest or appearance of lack of impartiality, independence with respect to the matters under review, and lack of bias. Although, financial conflicts of interest, the appearance of lack of impartiality, lack of independence, and bias may result in disqualification, the absence of such concerns does not assure that a candidate will be selected to serve on the FIFRA SAP. Numerous qualified candidates are identified for each panel. Therefore, selection decisions involve carefully weighing a number of factors including the candidates' areas of expertise and professional qualifications and achieving an overall balance of different scientific perspectives on the panel. In order to have the collective breadth of experience needed to address the Agency's charge for this meeting, the Agency anticipates selecting approximately 10 ad hoc scientists.

FIFRA SAP members are subject to the provisions of 5 CFR part 2634, Executive Branch Financial Disclosure, as supplemented by the EPA in 5 CFR part 6401. In anticipation of this requirement, prospective candidates for service on the FIFRA SAP will be asked to submit confidential financial information which shall fully disclose, among other financial interests, the candidate's employment, stocks and bonds, and where applicable, sources of research support. The EPA will evaluate the candidates financial disclosure form to assess whether there are financial conflicts of interest, appearance of a lack of impartiality or any prior involvement with the development of the documents under consideration (including previous scientific peer review) before the candidate is considered further for service on the FIFRA SAP. Those who are selected from the pool of prospective candidates will be asked to attend the public meetings and to participate in the discussion of key issues and assumptions at these meetings. In addition, they will be asked to review and to help finalize the meeting minutes. The list of FIFRA SAP members participating at this meeting will be posted on the FIFRA SAP website at *http://epa.gov/scipoly/sap* or may be obtained from the OPP Regulatory Public Docket at *http://www.regulations.gov*.

II. Background

A. Purpose of the FIFRA SAP

The FIFRA SAP serves as the primary scientific peer review mechanism of EPA's Office of Prevention, Pesticides and Toxic Substances (OPPTS) and is structured to provide scientific advice, information and recommendations to the EPA Administrator on pesticides and pesticide-related issues as to the impact of regulatory actions on health and the environment. The FIFRA SAP is a Federal advisory committee established in 1975 under FIFRA that operates in accordance with requirements of the Federal Advisory Committee Act. The FIFRA SAP is composed of a permanent panel consisting of seven members who are appointed by the EPA Administrator from nominees provided by the National Institutes of Health and the National Science Foundation. FIFRA, as amended by FQPA, established a Science Review Board consisting of at least 60 scientists who are available to the Scientific Advisory Panel on an ad hoc basis to assist in reviews conducted by the Scientific Advisory Panel. As a peer review mechanism, the FIFRA SAP provides comments, evaluations and recommendations to improve the effectiveness and quality of analyses made by Agency scientists. Members of the FIFRA SAP are scientists who have sufficient professional qualifications, including training and experience, to provide expert advice and recommendation to the Agency.

B. Public Meeting

EPA's Office of Pesticide Programs (OPP) has received an application of registration from Pioneer Hi-Bred International, Inc. for registration of Optimum® AcreMax™ 1 Insect Protection, which is a corn seed blend containing seeds that express the Bt toxins Cry34Ab1, Cry35Ab1, and Cry1F in a stack for corn rootworm (CRW) and lepidopteran protection mixed with seeds that express only Cry1F for lepidopteran protection (i.e. ''refuge in the bag'' for CRW). Pioneer proposes to use a seed blend mixture containing ≥ 2% refuge seeds. OPP has reviewed the submitted studies and modeling chapter and has identified several areas of uncertainties with respect to CRW biology, population genetics, and modeling. EPA is seeking the assistance of the FIFRA SAP to address the scientific issues associated with the seed mix proposal for CRW resistance management and provide the Agency with guidance as to the implications of the uncertainties. These areas of uncertainties include:

1. Mode of action of Cry34/35Ab1 (i.e. toxic or repellent) to exposed CRW and implications for a seed mix,

2. Aspects of corn rootworm pest biology including the effects of delayed emergence and uneven sex ratios on random mating and ultimately on the rate of resistance evolution in a seed blend environment;

3. Assumptions about initial resistance gene frequency to Cry34/35Ab1;

4. Contributions of tolerance (minor) and resistance (major) genes and selection consequences in corn rootworm exposed to Cry34/35Ab1 in a seed blend environment;

5. Mortality for individuals being heterozygous (XY) and susceptible (XX) for the tolerance (minor) gene;

6. The overall simulation model (i.e. is it adequate to evaluate the proposed seed mix for Cry34/35Ab1); and

7. The mechanics of mixing refuge seed with Cry34/35Ab1 seed into a single bag and the potential distribution (i.e. random or non-random) of refuge plants within planted fields.

C. FIFRA SAP Documents and Meeting Minutes

EPA's background paper, related supporting materials, charge/questions to the FIFRA SAP, FIFRA SAP composition i.e., members and ad hoc members for this meeting, and the meeting agenda will be available by late January, 2009. In addition, the Agency may provide additional background documents as the materials become available. You may obtain electronic copies of these documents, and certain other related documents that might be available electronically, at *http://www.regulations.gov* and the FIFRA SAP homepage at *http://www.epa.gov/scipoly/sap*.

The FIFRA SAP will prepare meeting minutes summarizing its recommendations to the Agency approximately 90 days after the meeting. The meeting minutes will be posted on the FIFRA SAP website or may be obtained from the OPP Regulatory Public Docket at *http://www.regulations.gov*.

List of Subjects

Environmental protection, Pesticides and pests.

Dated: December 2, 2008.

Frank Sanders,

Director, Office of Science Coordination and Policy.

[FR Doc. E8–29114 Filed 12–9–08; 8:45 a.m.]

BILLING CODE 6560–50–S

ENVIRONMENTAL PROTECTION AGENCY

[EPA–HQ–OPP–2008–0835; FRL–8392–8]

FIFRA Scientific Advisory Panel; Notice of Public Meeting

AGENCY: Environmental Protection Agency (EPA).

ACTION: Notice.

SUMMARY: There will be a 3–day meeting of the Federal Insecticide, Fungicide, and Rodenticide Act Scientific Advisory Panel (FIFRA SAP) to consider and review a set of scientific issues being considered by the Agency that are associated with the data required to register Plant-Incorporated Protectants (PIP).

DATES: The meeting will be held on Wednesday, February 25, 2009 from 1:30 p.m. to approximately 5 p.m.; on Thursday, February 26, 2009 from 8:30 a.m. to approximately 5 p.m.; and Friday, February 27, 2009 from 8:30 a.m. to approximately 12 noon (eastern time).

Comments. The Agency encourages that written comments be submitted by February 9, 2009 and requests for oral comments be submitted by February 16, 2009. However, written comments and requests to make oral comments may be submitted until the date of the meeting, but anyone submitting written comments after February 9, 2009 should contact the Designated Federal Official (DFO) listed under **FOR FURTHER INFORMATION CONTACT.** For additional instructions, see Unit I.C. of the **SUPPLEMENTARY INFORMATION**.

Nominations. Nominations of candidates to serve as ad hoc members of the FIFRA SAP for this meeting should be provided on or before December 24, 2008.

Special accommodations. For information on access or services for individuals with disabilities, and to request accommodation of a disability, please contact the DFO listed under **FOR FURTHER INFORMATION CONTACT** at least 10 days prior to the meeting to give EPA as much time as possible to process your request.

ADDRESSES: The meeting will be held at the Environmental Protection Agency, Conference Center, Lobby Level, One Potomac Yard (South Bldg.), 2777 S. Crystal Dr., Arlington, VA 22202.

Comments. Submit your comments, identified by docket identification (ID) number EPA–HQ–OPP–2008–0835, by one of the following methods:

- *Federal eRulemaking Portal*: *http://www.regulations.gov*. Follow the on-line instructions for submitting comments.

- *Mail*: Office of Pesticide Programs (OPP) Regulatory Public Docket (7502P), Environmental Protection Agency, 1200 Pennsylvania Ave., NW., Washington, DC 20460–0001.
- *Delivery*: OPP Regulatory Public Docket (7502P), Environmental Protection Agency, Rm. S–4400, One Potomac Yard (South Bldg.), 2777 S. Crystal Dr., Arlington, VA. Deliveries are only accepted during the Docket Facility's normal hours of operation 8:30 a.m. to 4 p.m., Monday through Friday, excluding legal holidays). Special arrangements should be made for deliveries of boxed information. The Docket Facility telephone number is (703) 305–5805.

Instructions. Direct your comments to docket ID number EPA–HQ–OPP–2008–0835. If your comments contain any information that you consider to be CBI or otherwise protected, please contact the DFO listed under **FOR FURTHER INFORMATION CONTACT** to obtain special instructions before submitting your comments. EPA's policy is that all comments received will be included in the docket without change and may be made available on-line at *http://www.regulations.gov*, including any personal information provided, unless the comment includes information claimed to be Confidential Business Information (CBI) or other information whose disclosure is restricted by statute. Do not submit information that you consider to be CBI or otherwise protected through regulations.gov or e-mail. The regulations.gov website is an ''anonymous access'' system, which means EPA will not know your identity or contact information unless you provide it in the body of your comment. If you send an e-mail comment directly to EPA without going through regulations.gov, your e-mail address will be automatically captured and included as part of the comment that is placed in the docket and made available on the Internet. If you submit an electronic comment, EPA recommends that you include your name and other contact information in the body of your comment and with any disk or CD-ROM you submit. If EPA cannot read your comment due to technical difficulties and cannot contact you for clarification, EPA may not be able to consider your comment. Electronic files should avoid the use of special characters, any form of encryption, and be free of any defects or viruses.

Docket: All documents in the docket are listed in the docket index available at *http://www.regulations.gov*. Although listed in the index, some information is not publicly available, e.g., CBI or other information whose disclosure is restricted by statute. Certain other material, such as copyrighted material, is not placed on the Internet and will be publicly available only in hard copy form. Publicly available docket materials are available either in the electronic docket at *http://www.regulations.gov*, or, if only available in hard copy, at the OPP Regulatory Public Docket in Rm. S–4400, One Potomac Yard (South Bldg.), 2777 S. Crystal Dr., Arlington, VA. The hours of operation of this Docket Facility are from 8:30 a.m. to 4 p.m., Monday through Friday, excluding legal holidays. The Docket Facility telephone number is (703) 305–5805.

Nominations, requests to present oral comments, and requests for special accommodations. Submit nominations to serve as ad hoc members of the FIFRA SAP, requests for special seating accommodations, or requests to present oral comments to the DFO listed under **FOR FURTHER INFORMATION CONTACT**.

FOR FURTHER INFORMATION CONTACT: Joseph E. Bailey, DFO, Office of Science Coordination and Policy (7201M), Environmental Protection Agency, 1200 Pennsylvania Ave., NW., Washington, DC 20460–0001; telephone number: (202) 564–2045; fax number: (202) 564–8382; e-mail addresses: *bailey.joseph@epa.gov*.

SUPPLEMENTARY INFORMATION:

I. General Information

A. Does this Action Apply to Me?

This action is directed to the public in general. This action may, however, be of interest to persons who are or may be required to conduct testing of chemical substances under the Federal Food, Drug, and Cosmetic Act (FFDCA), FIFRA, and the Food Quality Protection Act of 1996 (FQPA). Since other entities may also be interested, the Agency has not attempted to describe all the specific entities that may be affected by this action. If you have any questions regarding the applicability of this action to a particular entity, consult the DFO listed under **FOR FURTHER INFORMATION CONTACT**.

B. What Should I Consider as I Prepare My Comments for EPA?

When submitting comments, remember to:

1. Identify the document by docket ID number and other identifying information (subject heading, **Federal Register** date and page number).
2. Follow directions. The Agency may ask you to respond to specific questions or organize comments by referencing a Code of Federal Regulations (CFR) part or section number.
3. Explain why you agree or disagree; suggest alternatives and substitute language for your requested changes.
4. Describe any assumptions and provide any technical information and/or data that you used.
5. If you estimate potential costs or burdens, explain how you arrived at your estimate in sufficient detail to allow for it to be reproduced.
6. Provide specific examples to illustrate your concerns and suggest alternatives.
7. Explain your views as clearly as possible, avoiding the use of profanity or personal threats.
8. Make sure to submit your comments by the comment period deadline identified.

C. How May I Participate in this Meeting?

You may participate in this meeting by following the instructions in this unit. To ensure proper receipt by EPA, it is imperative that you identify docket ID number EPA–HQ–OPP–2008–0835 in the subject line on the first page of your request.

1. *Written comments*. The Agency encourages that written comments be submitted, using the instructions in **ADDRESSES**, no later than February 9, 2008, to provide the FIFRA SAP the time necessary to consider and review the written comments. Written comments are accepted until the date of the meeting, but anyone submitting written comments after February 9, 2008 should contact the DFO listed under **FOR FURTHER INFORMATION CONTACT.** Anyone submitting written comments at the meeting should bring 30 copies for distribution to the FIFRA SAP.

2. *Oral comments*. The Agency encourages that each individual or group wishing to make brief oral comments to the FIFRA SAP submit their request to the DFO listed under **FOR FURTHER INFORMATION CONTACT** no later than February 16, 2008, in order to be included on the meeting agenda. Requests to present oral comments will be accepted until the date of the meeting and, to the extent that time permits, the Chair of the FIFRA SAP may permit the presentation of oral comments at the meeting by interested persons who have not previously requested time. The request should identify the name of the individual making the presentation, the organization (if any) the individual will represent, and any requirements for audiovisual equipment (e.g., overhead projector, 35 mm projector, chalkboard). Oral comments before the FIFRA SAP are limited to approximately 5 minutes unless prior arrangements have been made. In addition, each speaker should

bring 30 copies of his or her comments and presentation slides for distribution to the FIFRA SAP at the meeting.

3. *Seating at the meeting.* Seating at the meeting will be open and on a first-come basis.

4. *Request for nominations to serve as ad hoc members of the FIFRA SAP for this meeting.* As part of a broader process for developing a pool of candidates for each meeting, the FIFRA SAP staff routinely solicits the stakeholder community for nominations of prospective candidates for service as ad hoc members of the FIFRA SAP. Any interested person or organization may nominate qualified individuals to be considered as prospective candidates for a specific meeting. Individuals nominated for this meeting should have expertise in one or more of the following areas: Protein/gene nomenclature, bioinformatics related to allergen and toxin assessment, risk assessment of PIP transgenic plants (especially in the assessment of synergistic effects of combined traits), possible PIP effects on soil microbiology related to nutrient cycling, and environmental assessment of gene flow (especially as related to non-target exposure to novel PIPs as a consequence of gene flow). Nominees should be scientists who have sufficient professional qualifications, including training and experience, to be capable of providing expert comments on the scientific issues for this meeting. Nominees should be identified by name, occupation, position, address, and telephone number. Nominations should be provided to the DFO listed under **FOR FURTHER INFORMATION CONTACT** on or before December 24, 2008. The Agency will consider all nominations of prospective candidates for this meeting that are received on or before this date. However, final selection of ad hoc members for this meeting is a discretionary function of the Agency.

The selection of scientists to serve on the FIFRA SAP is based on the function of the panel and the expertise needed to address the Agency's charge to the panel. No interested scientists shall be ineligible to serve by reason of their membership on any other advisory committee to a Federal department or agency or their employment by a Federal department or agency except the EPA. Other factors considered during the selection process include availability of the potential panel member to fully participate in the panel's reviews, absence of any conflicts of interest or appearance of lack of impartiality, independence with respect to the matters under review, and lack of bias. Although, financial conflicts of interest, the appearance of lack of impartiality, lack of independence, and bias may result in disqualification, the absence of such concerns does not assure that a candidate will be selected to serve on the FIFRA SAP. Numerous qualified candidates are identified for each panel. Therefore, selection decisions involve carefully weighing a number of factors including the candidates' areas of expertise and professional qualifications and achieving an overall balance of different scientific perspectives on the panel. In order to have the collective breadth of experience needed to address the Agency's charge for this meeting, the Agency anticipates selecting approximately 10 ad hoc scientists.

FIFRA SAP members are subject to the provisions of 5 CFR part 2634, Executive Branch Financial Disclosure, as supplemented by the EPA in 5 CFR part 6401. In anticipation of this requirement, prospective candidates for service on the FIFRA SAP will be asked to submit confidential financial information which shall fully disclose, among other financial interests, the candidate's employment, stocks and bonds, and where applicable, sources of research support. The EPA will evaluate the candidates financial disclosure form to assess whether there are financial conflicts of interest, appearance of a lack of impartiality or any prior involvement with the development of the documents under consideration (including previous scientific peer review) before the candidate is considered further for service on the FIFRA SAP. Those who are selected from the pool of prospective candidates will be asked to attend the public meetings and to participate in the discussion of key issues and assumptions at these meetings. In addition, they will be asked to review and to help finalize the meeting minutes. The list of FIFRA SAP members participating at this meeting will be posted on the FIFRA SAP website at *http://epa.gov/scipoly/sap* or may be obtained from the OPP Regulatory Public Docket at *http://www.regulations.gov*.

II. Background

A. Purpose of the FIFRA SAP

The FIFRA SAP serves as the primary scientific peer review mechanism of EPA's Office of Prevention, Pesticides and Toxic Substances (OPPTS) and is structured to provide scientific advice, information and recommendations to the EPA Administrator on pesticides and pesticide-related issues as to the impact of regulatory actions on health and the environment. The FIFRA SAP is a Federal advisory committee established in 1975 under FIFRA that operates in accordance with requirements of the Federal Advisory Committee Act. The FIFRA SAP is composed of a permanent panel consisting of seven members who are appointed by the EPA Administrator from nominees provided by the National Institutes of Health and the National Science Foundation. FIFRA, as amended by FQPA, established a Science Review Board consisting of at least 60 scientists who are available to the Scientific Advisory Panel on an ad hoc basis to assist in reviews conducted by the Scientific Advisory Panel. As a peer review mechanism, the FIFRA SAP provides comments, evaluations and recommendations to improve the effectiveness and quality of analyses made by Agency scientists. Members of the FIFRA SAP are scientists who have sufficient professional qualifications, including training and experience, to provide expert advice and recommendation to the Agency.

B. Public Meeting

The FIFRA will meet to consider scientific issues associated with the data required to register PIPs. A PIP is a pesticidal substance that is intended to be produced and used in a living plant, or in the produce thereof, and the genetic material necessary for production of such a pesticidal substance. The term includes both active and inert ingredients. PIPs are regulated as pesticides by EPA under FIFRA because they meet the FIFRA definition of a pesticide, being intended for preventing, destroying, repelling, or mitigating a pest.

EPA is seeking the assistance of the FIFRA SAP to evaluate several scientific issues associated with the data required to support registration of PIPs. These issues include gene/protein nomenclature, bioinformatics assessment of novel proteins, synergistic effects of multiple PIPs in a plant, soil microbial community effects, and the environmental assessment of gene flow.

This SAP review, along with other past PIP-related SAPs, will be used by the Agency to assist in preparing a proposed rule to establish data requirements for pesticides classified as PIPs. This rule would propose to codify the data requirements to regulate experimental use permits and register PIPs, thereby improving the Agency's ability to make regulatory decisions about human health and environmental effects of these pesticide products.

C. FIFRA SAP Documents and Meeting Minutes

EPA's background paper, related supporting materials, charge/questions to the FIFRA SAP, FIFRA SAP composition (i.e., members and ad hoc members for this meeting), and the meeting agenda will be available by late January, 2009. In addition, the Agency may provide additional background documents as the materials become available. You may obtain electronic copies of these documents, and certain other related documents that might be available electronically, at *http://www.regulations.gov* and the FIFRA SAP homepage at *http://www.epa.gov/scipoly/sap*.

The FIFRA SAP will prepare meeting minutes summarizing its recommendations to the Agency approximately 90 days after the meeting. The meeting minutes will be posted on the FIFRA SAP website or may be obtained from the OPP Regulatory Public Docket at *http://www.regulations.gov*.

List of Subjects

Environmental protection, Pesticides and pests.

Dated: December 2, 2008.

Frank Sanders,

Director, Office of Science Coordination and Policy.

[FR Doc. E8–29222 Filed 12–9–08; 8:45 a.m.]

BILLING CODE 6560–50–S

ENVIRONMENTAL PROTECTION AGENCY

[FRL–8749–9]

Modification to the NPDES General Permit for Oil and Gas Exploration, Development and Production Facilities in State and Federal Waters in Cook Inlet, AK, Permit No. AKG–31–5000 (Permit)

AGENCY: Environmental Protection Agency (EPA).

ACTION: Final notice of modification to NPDES general permit.

SUMMARY: On May 25, 2007, EPA issued the final Permit, with an effective date of July 2, 2007 (May 31, 2007, 72 FR 30377). On July 3, 2007, Union Oil Company of California and XTO Energy, Inc. (Petitioners) filed the Petition for Review, challenging three provisions of the Permit (the ''contested terms''), cited below. On the same date, Petitioners filed an Emergency Motion for Stay under Circuit Rule 27–3, requesting the Court stay the contested terms. EPA did not oppose the Emergency Stay and on July 5, 2007, the Court issued an order granting Petitioners' Emergency Motion for Stay.

On August 21, 2008, EPA and Petitioners reached a settlement agreement. Under this agreement, EPA published in the **Federal Register** on October 21, 2008 (73 FR 62497) a proposal to modify the Permit's contest terms by removing the third sentence of Condition II.A.10, the second sentence of Condition II.C.3, and the fourth sentence of Footnote 1 to Table 7–A, from the Permit. Intervenor Cook Inletkeeper did not object to the settlement agreement.

The proposed Permit modification was issued to the public for a 30-day comment period, which ended on November 20, 2008. No substantive public comments were received.

DATES: The Permit modification will become effective on December 24, 2008.

ADDRESSES: Copies of the modified Permit and Fact Sheet are available on the EPA Region 10 Web site at *http://www.epa.gov/r10earth/waterpermits.htm*. Requests for copies may also be made to Audrey Washington at (206) 553–0523, or electronically at *washington.audrey@epa.gov*.

FOR FURTHER INFORMATION CONTACT: Additional information can be obtained by visiting the EPA Region 10 Web site above or by contacting Hanh Shaw at *shaw.hanh@epa.gov* or (206) 553–0171.

SUPPLEMENTARY INFORMATION: *Executive Order 12866:* The Office of Management and Budget has exempted this action from the review requirements of Executive Order 12866 pursuant to Section 6 of that order.

Regulatory Flexibility Act: After review of the facts presented in the notice printed above, I hereby certify pursuant to the provision of 5 U.S.C. 553(b) that the Permit modification will not have a significant impact on a substantial number of small entities. Moreover, the Permit reduces a significant administrative burden on regulated resources.

Signed this 2nd day of December, 2008.

Michael F. Gearheard,

Director, Office of Water and Watersheds, Region 10.

[FR Doc. E8–29220 Filed 12–9–08; 8:45 am]

BILLING CODE 6560–50–P

ENVIRONMENTAL PROTECTION AGENCY

[EPA–HQ–OPP–2008–0846; FRL–8391–8]

Notice of Receipt of Request for Amendment to Delete Uses in Certain Pesticide Registrations

AGENCY: Environmental Protection Agency (EPA).

ACTION: Notice.

SUMMARY: In accordance with section 6(f)(1) of the Federal Insecticide, Fungicide, and Rodenticide Act (FIFRA), as amended, EPA is issuing a notice of receipt of request for amendment by a registrant to delete uses in certain pesticide registrations. Section 6(f)(1) of FIFRA provides that a registrant of a pesticide product may at any time request that any of its pesticide registrations be amended to delete one or more uses. FIFRA further provides that, before acting on the request, EPA must publish a notice of receipt of any request in the **Federal Register**.

DATES: The deletions are effective June 8, 2009, unless the Agency receives a written withdrawal request on or before June 8, 2009. The Agency will consider a withdrawal request postmarked no later than June 8, 2009.

Users of these products who desire continued use on crops or sites being deleted should contact the applicable registrant on or before June 8, 2009.

ADDRESSES: Submit your withdrawal request, identified by docket identification (ID) number EPA–HQ–OPP–2008–0846, by one of the following methods:

- *Mail*: Office of Pesticide Programs (OPP) Regulatory Public Docket (7502P), Environmental Protection Agency, 1200 Pennsylvania Ave., NW., Washington, DC 20460–0001.
- *Delivery*: OPP Regulatory Public Docket (7502P), Environmental Protection Agency, Rm. S–4400, One Potomac Yard (South Bldg.), 2777 S. Crystal Dr., Arlington, VA. Deliveries are only accepted during the Docket Facility's normal hours of operation (8:30 a.m. to 4 p.m., Monday through Friday, excluding legal holidays). Special arrangements should be made for deliveries of boxed information. The Docket Facility telephone number is (703) 305–5805.

FOR FURTHER INFORMATION CONTACT: Adam Heyward, Antimicrobials Division (7510P), Office of Pesticide Programs, Environmental Protection Agency, 1200 Pennsylvania Ave., NW., Washington, DC 20460–0001; telephone number: (703) 308–6422; e-mail address: *heyward.adam@epa.gov*.

SUPPLEMENTARY INFORMATION:

I. General Information

A. Does this Action Apply to Me?

This action is directed to the public in general. Although this action may be of particular interest to persons who produce or use pesticides, the Agency has not attempted to describe all the specific entities that may be affected by this action. If you have any questions regarding the information in this notice, consult the person listed under **FOR FURTHER INFORMATION CONTACT**.

B. How Can I Get Copies of this Document and Other Related Information?

1. *Docket*. EPA has established a docket for this action under docket ID number EPA–HQ–OPP–2008–0846. Publicly available docket materials are available either in the electronic docket at *http://www.regulations.gov*, or, if only available in hard copy, at the Office of Pesticide Programs (OPP) Regulatory Public Docket in Rm. S–4400, One Potomac Yard (South Bldg.), 2777 S. Crystal Dr., Arlington, VA. The hours of operation of this Docket Facility are from 8:30 a.m. to 4 p.m., Monday through Friday, excluding legal holidays. The Docket Facility telephone number is (703) 305–5805.

2. *Electronic access*. You may access this **Federal Register** document electronically through the EPA Internet under the ''**Federal Register**'' listings at *http://www.epa.gov/fedrgstr*.

II. What Action is the Agency Taking?

This notice announces receipt by the Agency of an application from a registrant to delete uses in a certain pesticide registration. This registration is listed in Table 1 by registration number, product name, active ingredient, and specific uses deleted:

TABLE 1.—REQUESTS FOR AMENDMENTS TO DELETE USES IN CERTAIN PESTICIDE REGISTRATIONS

EPA Registration No.	Product Name	Active Ingredient	Delete from Label
59106–6	BIO-CLEAR 2000	2-2-Dibromo-3-nitrilopropionamide	Once through fresh and sea water industrial cooling tower. Paper mill applications.

Users of this product who desire continued use on crops or sites being deleted should contact the applicable registrant before June 8, 2009 to discuss withdrawal of the application for amendment. This 180–day period will also permit interested members of the public to intercede with the registrant prior to the Agency's approval of the deletion.

Table 2 of this unit includes the name and address of record for the registrant of the product listed in Table 1 of this unit.

TABLE 2.—REGISTRANT REQUESTING AMENDMENTS TO DELETE USES IN CERTAIN PESTICIDE REGISTRATIONS

EPA Company Number	Company Name and Address
59106	Clearwater International, LLC515 Post Oak Blvd., Ste. 600 Houston, TX 77027

III. What is the Agency's Authority for Taking this Action?

Section 6(f)(1) of FIFRA provides that a registrant of a pesticide product may at any time request that any of its pesticide registrations be amended to delete one or more uses. The FIFRA further provides that, before acting on the request, EPA must publish a notice of receipt of any such request in the **Federal Register**. Thereafter, the Administrator may approve such a request.

IV. Procedures for Withdrawal of Request

Registrants who choose to withdraw a request for use deletion must submit the withdrawal in writing to Adam Heyward using the methods in **ADDRESSES**. The Agency will consider written withdrawal requests postmarked no later than June 8, 2009.

V. Provisions for Disposition of Existing Stocks

The Agency has authorized the registrant to sell or distribute product under the previously approved labeling for a period of 18 months after approval of the revision, unless other restrictions have been imposed, as in special review actions.

List of Subjects

Environmental protection, Pesticides and pests.

Dated: November 25, 2008.

Joan Harrigan Farrelly,

Director, Antimicrobials Division, Office of Pesticide Programs.

[FR Doc. E8–29113 Filed 12–9–08; 8:45 am]

BILLING CODE 6560–50–S

ENVIRONMENTAL PROTECTION AGENCY

[EPA–HQ–OPP–2008–0195; FRL–8393–7]

Notice of Receipt of Requests to Voluntarily Cancel Certain Pesticide Registrations

AGENCY: Environmental Protection Agency (EPA).

ACTION: Notice.

SUMMARY: In accordance with section 6(f)(1) of the Federal Insecticide, Fungicide, and Rodenticide Act (FIFRA), as amended, EPA is issuing a notice of receipt of request by registrants to voluntarily cancel certain pesticide registrations.

DATES: Unless a request is withdrawn by June 8, 2009 or January 9, 2009 for registrations for which the registrant requested a waiver of the 180–day comment period, orders will be issued canceling these registrations. The Agency will consider withdrawal requests postmarked no later than June 8, 2009 or January 9, 2009, whichever is applicable. Comments must be received on or before June 8, 2009 or January 9, 2009, for those registrations where the 180–day comment period has been waived.

ADDRESSES: Submit your comments and your withdrawal request, identified by docket identification (ID) number EPA–HQ–OPP–2008–0195, by one of the following methods:

- *Federal eRulemaking Portal*: *http://www.regulations.gov*. Follow the on-line instructions for submitting comments.
- *Mail*: Office of Pesticide Programs (OPP) Regulatory Public Docket (7502P), Environmental Protection Agency, 1200 Pennsylvania Ave., NW., Washington, DC 20460–0001. Written Withdrawal Request, Attention : John Jamula, Information Technology and Resources Management Division (7502P).
- *Delivery*: OPP Regulatory Public Docket (7502P), Environmental

Protection Agency, Rm. S–4400, One Potomac Yard (South Bldg.), 2777 S. Crystal Dr., Arlington, VA. Deliveries are only accepted during the Docket's normal hours of operation (8:30 a.m. to 4 p.m., Monday through Friday, excluding legal holidays). Special arrangements should be made for deliveries of boxed information. The Docket Facility telephone number is (703) 305–5805.

Instructions: Direct your comments to docket ID number EPA–HQ–OPP–2008–0195. EPA's policy is that all comments received will be included in the docket without change and may be made available on-line at *http://www.regulations.gov*, including any personal information provided, unless the comment includes information claimed to be Confidential Business Information (CBI) or other information whose disclosure is restricted by statute. Do not submit information that you consider to be CBI or otherwise protected through regulations.gov or e-mail. The regulations.gov website is an ''anonymous access'' system, which means EPA will not know your identity or contact information unless you provide it in the body of your comment. If you send an e-mail comment directly to EPA without going through regulations.gov, your e-mail address will be automatically captured and included as part of the comment that is placed in the docket and made available on the Internet. If you submit an electronic comment, EPA recommends that you include your name and other contact information in the body of your comment and with any disk or CD-ROM you submit. If EPA cannot read your comment due to technical difficulties and cannot contact you for clarification, EPA may not be able to consider your comment. Electronic files should avoid the use of special characters, any form of encryption, and be free of any defects or viruses.

Docket: All documents in the docket are listed in the docket index available in regulations.gov. To access the electronic docket, go to *http://www.regulations.gov*, select ''Advanced Search,'' then ''Docket Search.'' Insert the docket ID number where indicated and select the ''Submit'' button. Follow the instructions on the regulations.gov website to view the docket index or access available documents. Although listed in the index, some information is not publicly available, e.g., CBI or other information whose disclosure is restricted by statute. Certain other material, such as copyrighted material, is not placed on the Internet and will be publicly available only in hard copy form. Publicly available docket materials are available either in the electronic docket at *http://www.regulations.gov*, or, if only available in hard copy, at the OPP Regulatory Public Docket in Rm. S–4400, One Potomac Yard (South Bldg.), 2777 S. Crystal Dr., Arlington, VA. The hours of operation of this Docket Facility are from 8:30 a.m. to 4 p.m., Monday through Friday, excluding legal holidays. The Docket Facility telephone number is (703) 305–5805.

FOR FURTHER INFORMATION CONTACT: John Jamula, Information Technology and Resources Management Division, Office of Pesticide Programs, Environmental Protection Agency, 1200 Pennsylvania Ave., NW., Washington, DC 20460–0001; telephone number: (703) 305–6426; e-mail address: *jamula.john@epa.gov*.

SUPPLEMENTARY INFORMATION:

I. General Information

A. Does this Action Apply to Me?

This action is directed to the public in general. Although this action may be of particular interest to persons who produce or use pesticides, the Agency has not attempted to describe all the specific entities that may be affected by this action. If you have any questions regarding the information in this notice, consult the person listed under **FOR FURTHER INFORMATION CONTACT**.

B. What Should I Consider as I Prepare My Comments for EPA?

1. *Submitting CBI*. Do not submit this information to EPA through regulations.gov or e-mail. Clearly mark the part or all of the information that you claim to be CBI. For CBI information in a disk or CD-ROM that you mail to EPA, mark the outside of the disk or CD-ROM as CBI and then identify electronically within the disk or CD-ROM the specific information that is claimed as CBI. In addition to one complete version of the comment that includes information claimed as CBI, a copy of the comment that does not contain the information claimed as CBI must be submitted for inclusion in the public docket. Information so marked will not be disclosed except in accordance with procedures set forth in 40 CFR part 2.

2. *Tips for preparing your comments*. When submitting comments, remember to:

i. Identify the document by docket ID number and other identifying information (subject heading, **Federal Register** date and page number).

ii. Follow directions. The Agency may ask you to respond to specific questions or organize comments by referencing a Code of Federal Regulations (CFR) part or section number.

iii. Explain why you agree or disagree; suggest alternatives and substitute language for your requested changes.

iv. Describe any assumptions and provide any technical information and/or data that you used.

v. If you estimate potential costs or burdens, explain how you arrived at your estimate in sufficient detail to allow for it to be reproduced.

vi. Provide specific examples to illustrate your concerns and suggest alternatives.

vii. Explain your views as clearly as possible, avoiding the use of profanity or personal threats.

viii. Make sure to submit your comments by the comment period deadline identified.

II. What Action is the Agency Taking?

This notice announces receipt by the Agency of applications from registrants to cancel 171 pesticide products registered under section 3 or 24(c) of FIFRA. These registrations are listed in sequence by registration number (or company number and 24(c) number) in Table 1 of this unit:

TABLE 1.—REGISTRATIONS WITH PENDING REQUESTS FOR CANCELLATION

Registration no.	Product Name	Chemical Name
000004–00342	Bonide Lawn Fungicide with Bayleton 1%	Triadimefon
000004–00362	Bonide Disease Beater Lawn Fungicide with Bayleton Fung	Triadimefon
000100–00975	TD Herbicide	Benzoic acid, 3,6-dichloro-2-methoxy-,c compd with 2-(2-aminoethoxy)ethanol (1:1)

TABLE 1.—REGISTRATIONS WITH PENDING REQUESTS FOR CANCELLATION—Continued

Registration no.	Product Name	Chemical Name
		Triasulfuron
000100–01018	Cypermethrin Concentrate	Cypermethrin
000100–01186	Touchdown 008	Dicamba
		Glycine, N-(phosphonomethyl)- potassium salt
000100 ID–99–0023	Dual Magnum Herbicide	S-Metolachlor
000100 OR–03–0004	Discover Herbicide	Clodinafop-propargyl (CAS Reg. No.105512-06-9)
000228–00103	Riverdale Dairy Spray contains Vapona Insecticide	Dichlorvos
000228–00389	Riverdale MMMCCCXXXVI WP	Thiophanate-methyl
000239–02343	Ortho Chickweed & Clover Control	Mecoprop, dimethylamine salt
000239–02499	Weed-B-Gon Weed Killer	2,4-D, dimethylamine salt
		Mecoprop, dimethylamine salt
000241–00359	Resolve SG Herbicide	Dicamba, sodium salt
		Imazethapyr
000241 OR–00–0030	Prowl 3.3 EC Herbicide	Pendimethalin
000264–00417	Temik 15G Aldicarb Pesticide for Use on Citrus Only	Aldicarb
000264–00426	Temik Brand 15g Aldicarb Pesticide for Sale and Use In	Aldicarb
000264–00523	Temik Brand 15g Nw Aldicarb Pesticide for Use on Potato	Aldicarb
000264–00622	Dropp 50WP Cotton Defoliant	Thidiazuron
000264–01045	Propick 50WP	Thidiazuron
000264 AL–93–0002	Temik Brand 15g Aldicarb Pesticide	Aldicarb
000264 AR–81–0011	Temik(r) Aldicarb Pesticide 15% Granular	Aldicarb
000264 CA–02–0003	Temik Brand 15G Aldicarb Pesticide	Aldicarb
000264 FL–78–0023	Temik(r) Aldicarb Pesticide 15% Granular	Aldicarb
000264 FL–80–0008	Temik(r) Aldicarb Pesticide 15% Granular	Aldicarb
000264 FL–88–0003	Temik 15 G Aldicarb Pesticide	Aldicarb
000264 GA–80–0019	Temik(r) Aldicarb Pesticide 15% Granular	Aldicarb
000264 ID–80–0037	Temik(r) Aldicarb Pesticide 15% Granular	Aldicarb
000264 MO–81–0011	Temik(r) Aldicarb Pesticide 15% Granular	Aldicarb
000264 MS–82–0006	Temik 15 G Aldicarb Pesticide	Aldicarb
000264 NC–79–0021	Temik 15% Granular Aldicarb Pesticide	Aldicarb
000264 NC–81–0033	Temik(r) Aldicarb Pesticide 15% Granular	Aldicarb
000264 OR–07–0007	Mocap EC Nematicide - Insecticide	Ethoprop
000264 OR–98–0016	Axiom DF Herbicide	Flufenacet
000264 PR–87–0001	Temik Aldicarb Pesticide	Aldicarb
000264 SC–79–0011	Temik(r) Aldicarb Pesticide 15% Granular	Aldicarb

TABLE 1.—REGISTRATIONS WITH PENDING REQUESTS FOR CANCELLATION—Continued

Registration no.	Product Name	Chemical Name
000264 VA–79–0016	Temik 15 G Aldicarb Pesticide	Aldicarb
000264 VA–80–0032	Temik(r) Aldicarb Pesticide 15% Granular	Aldicarb
000264 WA–81–0033	Temik(r) Aldicarb Pesticide 15% Granular	Aldicarb
000264 WA–97–0032	Gustafson 42-S Thiram Fungicide	Thiram
000264 WA–97–0036	Gustafson 42-S Thiram Fungicide	Thiram
000279–02874	Furadan 5G Insecticide - Nematicide	Carbofuran
000279–02922	Furadan 5% Granules Insecticide - Nematicide	Carbofuran
000279–03082	Prevail FG Termiticide	Cypermethrin
000279–03085	Cynoff WSB Insecticide In Water Soluble Bags	Cypermethrin
000279–03109	Cynoff 50 WP Insecticide.	Cypermethrin
000279–03117	Cynoff 50 WSB Insecticide	Cypermethrin
000279–03118	Prevail 4 EW Termiticide	Cypermethrin
000279–03120	Cynoff 2.5 EW Insecticide	Cypermethrin
000279–03131	Prevail TC Termiticide	Cypermethrin
000279–03209	Prevail PTC Termiticide	Cypermethrin
000279–03275	Cype Technical Insecticide	Cypermethrin
000279–03292	Cyper Technical Insecticide	Cypermethrin
000279 MS–90–0022	Prevail FT Termiticide	Cypermethrin
000279 PR–85–0001	Furadan 10 G Insecticide/nematicide	Carbofuran
000279 PR–96–0003	Furadan 10 G Insecticide/nematicide	Carbofuran
000432–00758	Cypermethrin 40 WP	Cypermethrin
000432–00938	Prograss Flowable Herbicide	Ethofumesate
000432–01300	Bayleton 216 Concentrate	Triadimefon
000538–00181	St. Augustinegrass Growth Regulator with Fertilizer	Acetamide,N N-(2,4-dimethyl-5-(((trifluoromethyl)sulfonyl)amino)phenyl)-, compd.with 2,2'imi
000829–00251	Sa-50 Brand Cygon 2e Dimethoate Systemic Insecticide	Dimethoate
000869–00222	Green Light Fung-Away Systemic Fungicide	Triadimefon
000869–00224	Green Light Fung-Away Systemic Lawn Fungicide	Triadimefon
000961–00353	Lebanon Bayleton	Triadimefon
000961–00354	Lebanon Bayleton 1.0% G	Triadimefon
000961–00388	Woodace Hs Briqueetes with 0.1% Bayleton.	Triadimefon
000961–00389	Woodace Ls Briquettes with 0.05% Bayleton.	Triadimefon
001769–00122	Chemweed 265	MCPP-P-potassium

TABLE 1.—REGISTRATIONS WITH PENDING REQUESTS FOR CANCELLATION—Continued

Registration no.	Product Name	Chemical Name
001839–00121	10% BTC 776/tin Industrial Water Cooling Tower Microbio	Alkyl* dimethyl benzyl ammonium chloride *(60%C14, 30%C16, 5%C18,5%C12)
		Dialkyl* methyl benzyl ammonium chloride *(60% C14, 30% C16, 5% C18, 5%C12)
		Tributyltin oxide
001839–00122	10% Btc 2125m/tin Industrial And/or Commercial Recircul	Alkyl* dimethyl benzyl ammonium chloride *(60%C14, 30%C16, 5%C18,5%C12)
		Alkyl* dimethyl ethylbenzyl ammonium chloride *(68%C12, 32%C14)
		Tributyltin oxide
002217–00291	Vapona 25e	Dichlorvos
002217–00463	Vapona Insecticide 15-E	Dichlorvos
002724–00691	Intercept H & G Rose, Ornamental & Lawn Systemic Diseas	Triadimefon
002724–00696	Crossfire Multi-Purpose Insecticide Pressurized Spray	d-trans-Chrysanthemum monocarboxylic ester of dl-2-allyl-4-hydroxy-3-methyl-2-cyclopenten-1-
		Piperonyl butoxide
		Cypermethrin
002935 HI–90–0008	Volck Supreme Spray	Aliphatic petroleum solvent
002935 OR–06–0013	Diazinon 14G	Diazinon
002935 WA–80–0073	Red Top Superior Spray Oil N.w.	Mineral oil - includes paraffin oil from 063503
004787–00048	Declare	Methyl parathion
004822–00389	Raid Ant & Roach Killer II	Pyrethrins
		Tetramethrin
		Cypermethrin
004822–00436	Raid Ant and Roach Killer 13	Tetramethrin
		Cypermethrin
005011–00049	Formula GH-19	Dichlorvos
005481 OR–96–0027	Avenge Wild Oat Herbicide	Difenzoquat methyl sulfate
005887–00046	Grass Weed & Vegetation Killer	Sodium chlorate
005905–00493	Dimethoate 4 E.C.	Dimethoate
005905–00553	HM-2025	2-4,D
		Carfentrazone-ethyl
005905 CA–04–0003	Omni Supreme Spray	Aliphatic petroleum solvent
007401–00097	Ferti-Lome Systemic Evergreen Spray	Dimethoate
007401–00106	Ferti-Lome Spider Mite Spray	Dimethoate
007401–00181	Ferti-Lome New Biological Worm Spray	Bacillus thuringiensis subsp. kurstaki
007401–00253	Ferti-Lome Dipel Biological Worm Spray	Bacillus thuringiensis subsp. kurstaki
007401–00338	Hi-Yield Cygon Systemic Insect Spray	Dimethoate
007401–00345	Hi-Yield Biological Worm Spray	Bacillus thuringiensis subsp. kurstaki

TABLE 1.—REGISTRATIONS WITH PENDING REQUESTS FOR CANCELLATION—Continued

Registration no.	Product Name	Chemical Name
007401–00360	Hi-Yield Biological Worm Spray	Bacillus thuringiensis subsp. kurstaki
007969–00082	BAS 530 04 Herbicide	3-Isopropyl-1H-2,1,3-benzothiadiazin-4(3H)-one-2,2-dioxide, sodium salt
		Sodium salt of fomesafen
007969–00083	Faster Herbicide	3-Isopropyl-1H-2,1,3-benzothiadiazin-4(3H)-one-2,2-dioxide, sodium salt
		Sodium salt of fomesafen
007969–00166	Celebrity Herbicide	Dicamba, sodium salt
		Nicosulfuron
008536–00040	Card-O-Vap 5	Dichlorvos
009444–00182	Air-Devil Residual with Cypermethrin	Cypermethrin
010163–00188	Botran 6% Dust	Dicloran
010163–00191	Botran 15% Dust Fungicide	Dicloran
010163–00239	Botran 65 Manufacturing Use Product	Dicloran
010163 CA–94–0007	Botran 75 W-Fungicide	Dicloran
010163 ID–94–0006	Botran 75 W	Dicloran
010163 ID–97–0002	Botran 5F	Dicloran
010163 WA–94–0009	Botran 75 W	Dicloran
010163 WA–94–0010	Prefar 4-E Herbicide	Bensulide
010707–00032	Magnacide B-6603	Sodium chlorite
		Sodium chlorate
010807–00004	Misty Anti-Crawl Residual Insecticide	Propoxur
		MGK 264
		Piperonyl butoxide
		Pyrethrins
010807–00048	Misty Wasp & Hornet Killer	Propoxur
		MGK 264
		Piperonyl butoxide
		Pyrethrins
010807–00085	Misty Ant, Roach, & Spider Residual Insecticide	Propoxur
		MGK 264
		Piperonyl butoxide
		Pyrethrins
010951–00007	Britz Cotton Defoliant Concentrate	Sodium chlorate
010951–00013	Britz Botran 6 Dust	Dicloran
010951–00014	Britz Botran Sulfur 6-25 Dust	Dicloran
		Sulfur
019713–00046	Drexel Simazine Herbicide 80w	Simazine

TABLE 1.—REGISTRATIONS WITH PENDING REQUESTS FOR CANCELLATION—Continued

Registration no.	Product Name	Chemical Name
019713–00081	Drexel Kop 300	Basic copper sulfate
019713–00202	Chapman Weed Free BCB-4p	Bromacil
		Sodium chlorate
019713–00271	Drexel Simazine 80wp	Simazine
019713–00353	Ddvp 90% Concentrate	Dichlorvos
019713–00546	Simazine 4g	Simazine
019713–00583	Drexel Glyphosate Technical 97.4%	Glyphosate
019713 LA–00–0014	Kop-Hydroxide 50	Copper hydroxide
019713 MS–00–0012	Kop-Hydroxide 50	Copper hydroxide
033658–00022	Gharda Napropamide Technical	Napropamide
045309–00043	Swimfree Charge	Sodium bromide
047000–00002	CT Total Release Fogger	d-trans-Chrysanthemum monocarboxylic ester ofdl-2-allyl-4-hydroxy-3-methyl-2-cyclopenten-1-
		Phenothrin
		Dichlorvos
047000–00043	Economy Fly Bait 1% Vapona Insecticide	Dichlorvos
047000–00054	Dairy Cattle Spray	2,5-Pyridinedicarboxylic acid, dipropyl ester
		MGK 264
		Piperonyl butoxide
		Pyrethrins
		Dichlorvos
047000–00130	Robert's ''vapora'' 18.5% Vapona Concentrate	Dichlorvos
047000–00131	Hopkins Vapora Home and Farm Bomb	Piperonyl butoxide
		Pyrethrins
		Dichlorvos
047629–00010	Bromethalin Manufacturing Concentrate	Bromethalin
051036–00296	Dicamba Acid Technical	Dicamba
051036–00297	Dicamba DMA Salt Mup	Benzoic acid, 3,6-dichloro-2-methoxy-, compd with N-methylmethanamine (1:1)
051036–00298	Dicamba Potassium Mup	Benzoic acid, 3,6-dichloro-2-methoxy-, potassium salt
051036–00302	Dicamba Sodium Technical	Dicamba, sodium salt
051036 PA–06–0001	Dimethoate 4E	Dimethoate
053883–00094	Cyper Horse Spray	Butoxypolypropylene glycol
		Piperonyl butoxide
		Pyrethrins
		Cypermethrin
053883–00097	Prometon 5PS	Boric acid (HBO2), sodium salt

TABLE 1.—REGISTRATIONS WITH PENDING REQUESTS FOR CANCELLATION—Continued

Registration no.	Product Name	Chemical Name
		Sodium chlorate
		Prometon
		Simazine
059639–00053	Valent Metaldehyde 4% Bait (pelleted)	Metaldehyde
061483–00079	Elastrel Insecticide	Dichlorvos
062719–00397	Kerb 50W Herbicide In Wsp	Propyzamide
062719–00510	Bastion* T	MCPP-P-potassium
		Fluroxypyr 1-methylheptyl ester
062719–00526	GF-1248	Glyphosate-isopropylammonium
		2-(4,5-Dihydro-4-methyl-4-(1-methylethyl)-5-oxo-1H-imidazol-2-yl)-3-pyridinecarboxylic acid
062719–00578	Kerb 3.3 Sc	Propyzamide
064014–00012	Tree Tech Dicamba	Dicamba
066222 ID–03–0003	Thionex 3 EC	Endosulfan
066300 PR–87–0002	Temik Brand 15g Aldicarb Pesticide	Aldicarb
066300 PR–96–0001	Temik Brand 15g Aldicarb Pesticide	Aldicarb
066330–00323	Thidiazuron 50W	Thidiazuron
067760 OR–00–0016	Fyfanon ULV	Malathion
069678–00001	Streptomycin Sulfate Technical	Streptomycin sulfate
069874–00002	Sodium Chlorate - High Strength Solution AG	Sodium chlorate
069874–00003	Sodium Chlorate Crystal AG	Sodium chlorate
070506–00088	Phen	Phenmedipham
070506–00089	DS-Phen	Phenmedipham
		Desmedipham
070506–00090	Des-Phen-Etho	Phenmedipham
		Desmedipham
		Ethofumesate
071096–00015	Bonide Snail, Slug & Sowbug Bait	Metaldehyde
		Carbaryl
072642–00001	Elector Insect Control Agent	Spinosad (Naturally occurring mixture of spinosyn A, pc code 110003 , CAS Reg.No. 131929-6
073049–00051	Bactimos Pellets	Bacillus thuringiensis subsp. israelensis
073049–00052	Bactimos Granules	Bacillus thuringiensis subsp. israelensis
073782–00002	Demosan 65w	Chloroneb
074655–00001	Betz Slime-Trol Rx 28	Dazomet
079427–00002	Wellcare Adm Fiber	Boric oxide
079427–00003	Wellcare Adm (finished Articles)	Boric oxide

TABLE 1.—REGISTRATIONS WITH PENDING REQUESTS FOR CANCELLATION—Continued

Registration no.	Product Name	Chemical Name
083223–00001	Napropamide 80 MUP	Napropamide
083223–00002	Regatta 80wp Agricultural Herbicide	Napropamide
083223–00003	Regatta 80wp Ornamental Herbicide	Napropamide
083223–00004	Regatta 75wg Agricultural Herbicide	Napropamide
083223–00005	Regatta 75wg Ornamental Herbicide	Napropamide
083223–00006	Regatta 2g Ornamental Herbicide	Napropamide
083223–00007	Regatta Ornamental Herbicide	Napropamide
083223–00008	Regatta 10G Herbicide	Napropamide
083893–00015	Greenleaf Weed & Feed	Dicamba
		2-4,D
		Mecoprop-P
083893–00016	Greenleaf Weed & Feed II	2,4-D, dimethylamine salt
		Propanoic acid, 2-(2,4-dichlorophenoxy)-, (R)-, compd. withN-methylmethanamine (1:1)
		Propanoic acid, 2-(4-chloro-2-methylphenoxy)-, (R)-, compd. withN-methylmethanamine (1:1)

A request to waive the 180–day comment period has been received for the following registrations: 000228–00389; 000279–02874; 000279–02922; 000279–03085; 001839–00121; 001839–00122; 007401–00181; 007401–00253; 007401–00345; 007401–00360; 019713–00583; 062719–00397; 062719–00510; 062719–00526; 062719–00578; 070506–00088; 070506–00089; 070506–00090; 072642–0001; 019713 LA–00–0014; 019713 MS–00–0012; 000279 PR–85–0001; and 000279 PR–96–0003.

Unless a request is withdrawn by the registrant within 180 days of publication of this notice, orders will be issued canceling all of these registrations. Users of these pesticides or anyone else desiring the retention of a registration should contact the applicable registrant directly during this 180–day period.

Table 2 of this unit includes the names and addresses of record for all registrants of the products in Table 1 of this unit, in sequence by EPA company number:

TABLE 2.—REGISTRANTS REQUESTING VOLUNTARY CANCELLATION

EPA Company no.	Company Name and Address
000004	Bonide Products, Inc., 6301 Sutliff Rd., Oriskany, NY 13424.
000100	Syngenta Crop Protection, Inc., Attn: Regulatory Affairs, PO Box18300, Greensboro, NC 27419–8300.
000228	Nufarm Americas Inc., 150 Harvester Drive, Suite 200, Burr Ridge, IL 60527.
000239	The Scotts Co., d/b/a The Ortho Group, Po Box 190, Marysville, OH 43040.
000241	BASF Corp., PO Box 13528, Research Triangle Park, NC 27709–3528.
000264	Bayer Cropscience LP, 2 T.W. Alexander Drive, Research Triangle Park, NC27709.
000279	FMC Corp. Agricultural Products Group, 1735 Market St, Philadelphia, PA 19103.
000432	Bayer Environmental Science, A Business Group of Bayer Cropscience LP, POBox 12014, Research Triangle Park, NC 27709.
000538	Scotts Co., The, 14111 Scottslawn Rd, Marysville, OH 43041.
000829	Southern Agricultural Insecticides, Inc., PO Box 218, Palmetto, FL 34220.
000869	Valent Gl Corp., c/o Valent USA Corp., Agent For: Green Light Co., 1600Riviera Ave. Suite 200, Walnut Creek, CA 94596.
000961	Product & Regulatory Associates, LLC, Agent For: Lebanon Seaboard Corp., POBox 351, Vorhees, NJ 08043.

TABLE 2.—REGISTRANTS REQUESTING VOLUNTARY CANCELLATION—Continued

EPA Company no.	Company Name and Address
001769	NCH Corp., 2727 Chemsearch Blvd., Irving, TX 75062.
001839	Stepan Co., 22 W. Frontage Rd., Northfield, IL 60093.
002217	PBI/Gordon Corp., PO Box 014090, Kansas City, MO 64101–0090.
002724	Wellmark International, 1501 E. Woodfield Rd., Suite 200 W., Schaumburg, IL60173.
002935	Wilbur Ellis Co., PO Box 1286, Fresno, CA 93715.
004787	Cheminova Inc., Agent For: Cheminova A/S, PO Box 110566, RTP, NC 27709.
004822	S.C. Johnson & Son Inc., 1525 Howe Street, Racine, WI 53403.
005011	Aire-Mate Inc., PO Box 406, Westfield, IN 46074.
005481	Amvac Chemical Corp., d/b/a Amvac, 4695 Macarthur Ct., Suite 1250, Newport Beach, CA 92660–1706.
005887	Value Gardens Supply, LLC, d/b/a Value Garden Supply, Po Box 585, SaintJoseph, MO 64502.
005905	Helena Chemical Co, 225 Schilling Blvd., Suite 300, Collierville, TN 38017.
007401	Mandava Associates, Llc, Agent For: Voluntary Purchasing Groups, Inc., 6860 N.Dallas Pkwy., Suite 200, Plano, TX 75024.
007969	BASF Corp., Agricultural Products, PO Box 13528, Research Triangle Park, NC 27709–3528.
008536	Soil Chemicals Corp., d/b/a Cardinal Professional Products, PO Box 782,Hollister, CA 95024.
009444	Waterbury Companies Inc., PO Box 640, Independence, LA 70443.
010163	Gowan Co, PO Box 5569, Yuma, AZ 85366–5569.
010707	Baker Petrolite Corp., 12645 W. Airport Blvd., Sugar Land, TX 77478.
010807	Amrep, Inc., 990 Industrial Park Drive, Marietta, GA 30062.
010951	Robinson Associates, Agent For: Britz Fertilizers Inc., 583 Canyon Rd, Redwood City, CA 94062.
019713	Drexel Chemical Co., POo Box 13327, Memphis, TN 38113–0327.
033658	IPM Resources LLC, Agent For: Gharda Chemicals Ltd., 660 Newtown-YardleyRd, Ste 105, Newtown, PA 18940.
045309	Aqua Clear Industries, LLC., PO Box 2456, Suwanee, GA 30024–0980.
047000	Chem-Tech, Ltd., 4515 Fleur Dr. #303, Des Moines, IA 50321.
047629	Woodstream Corp., PO Box 327, Lititz, PA 17543–0327.
051036	BASF Sparks LLC, PO Box 13528, Research Triangle Park, NC 27709.
053883	Control Solutions, Inc., 5903 Genoa-Red Bluff, Pasadena, TX 77507–1041.
059639	Valent U.S.A. Corp., 1600 Riviera Ave. Suite 200, Walnut Creek, CA 94596.
061483	KMG-Bernuth, Inc., 9555 W. Sam Houston Pkwy South, Suite 600, Houston, TX77099.
062719	Dow Agrosciences LLC, 9330 Zionsville Rd 308/2e, Indianapolis, IN 46268–1054.
064014	Florida Silvics Inc., d/b/a Tree Tech Microinjection Systems, 950 S.E. 215th Ave., Morriston, FL 32668.
066222	Makhteshim-Agan of North America Inc., 4515 Falls of Neuse Rd, Suite 300,Raleigh, NC 27609.
066300	Aventis Cropscience USA LP, Agent For: Aventis Cropscience Puerto Rico, PO Box 12014, Research Triangle Park, NC 27709.
066330	Arysta Lifescience North America, LLC, 15401 Weston Parkway, Suite 150, Cary, NC 27513.
067760	Cheminova, Inc., 1600 Wilson Blvd., Suite 700, Arlington, VA 22209.
069678	Danisco USA Inc., 4 New Century Parkway, New Century, KS 66031.

TABLE 2.—REGISTRANTS REQUESTING VOLUNTARY CANCELLATION—Continued

EPA Company no.	Company Name and Address
069874	Delta Analytical Corp., Agent For: Canexus U.S., Inc., 12510 Prosperity Drive, Suite 160, Silver Spring, MD 20904.
070506	United Phosphorus, Inc., 630 Freedom Business Center, Suite 402, King OfPrussia, PA 19406.
071096	Regulatory Services, Inc., Agent For: Or-Cal Inc., 17220 Westview Rd., Oswego, OR 97034.
072642	Elanco Animal Health, A Division of Eli Lilly & Co., PO Box 708, Greenfield, IN 46140.
073049	Valent Biosciences Corp., 870 Technology Way, Suite 100, Libertyville, IL60048–6316.
073782	Kincaid Inc., PO Box 490, Athens, TN 37371.
074655	Hercules Inc., Agent For: Hercules Inc., 7910 Baymeadows Way, Jacksonville, FL 32256.
079427	Wellman, Inc., 1041 521 Corporate Center Drive, Ft. Mill, SC 29707.
083223	Frank E. Sobotka, Phd, Agent For: Gharda High Performance Plastics, 660 Newton-Yardley Rd, Suite 106, Newtown, PA 18940.
083893	Greenleaf LLC, Po Box 1700, Lowell, AR 72745.

III. What is the Agency's Authority for Taking this Action?

Section 6(f)(1) of FIFRA provides that a registrant of a pesticide product may at any time request that any of its pesticide registrations be canceled. FIFRA further provides that, before acting on the request, EPA must publish a notice of receipt of any such request in the **Federal Register**. Thereafter, the Administrator may approve such a request.

IV. Procedures for Withdrawal of Request

Registrants who choose to withdraw a request for cancellation must submit such withdrawal in writing to the person listed under **FOR FURTHER INFORMATION CONTACT**, postmarked before June 8, 2009. This written withdrawal of the request for cancellation will apply only to the applicable FIFRA section 6(f)(1) request listed in this notice. If the product(s) have been subject to a previous cancellation action, the effective date of cancellation and all other provisions of any earlier cancellation action are controlling. The withdrawal request must also include a commitment to pay any reregistration fees due, and to fulfill any applicable unsatisfied data requirements.

V. Provisions for Disposition of Existing Stocks

The effective date of cancellation will be the date of the cancellation order. The orders effecting these requested cancellations will generally permit a registrant to sell or distribute existing stocks for 1 year after the date the cancellation request was received. This policy is in accordance with the Agency's statement of policy as prescribed in the **Federal Register** of June 26, 1991 (56 FR 29362) (FRL–3846–4). Exceptions to this general rule will be made if a product poses a risk concern, or is in noncompliance with reregistration requirements, or is subject to a data call-in. In all cases, product-specific disposition dates will be given in the cancellation orders.

Existing stocks are those stocks of registered pesticide products which are currently in the United States and which have been packaged, labeled, and released for shipment prior to the effective date of the cancellation action. Unless the provisions of an earlier order apply, existing stocks already in the hands of dealers or users can be distributed, sold, or used legally until they are exhausted, provided that such further sale and use comply with the EPA-approved label and labeling of the affected product. Exception to these general rules will be made in specific cases when more stringent restrictions on sale, distribution, or use of the products or their ingredients have already been imposed, as in a special review action, or where the Agency has identified significant potential risk concerns associated with a particular chemical.

List of Subjects

Environmental protection, Pesticides and pests.

Dated: December 2, 2008.

Kathryn Bouve

Acting Director, Information Technology and Resources Management Division, Office of Pesticide Programs.

[FR Doc. E8–29217 Filed 12–9–08; 8:45 am]

BILLING CODE 6560–50–S

FEDERAL DEPOSIT INSURANCE CORPORATION

FDIC Advisory Committee on Economic Inclusion; Notice of Charter Renewal

AGENCY: Federal Deposit Insurance Corporation (FDIC).

ACTION: Notice of renewal of the FDIC Advisory Committee on Economic Inclusion.

SUMMARY: Pursuant to the provisions of the Federal Advisory Committee Act (''FACA''), 5 U.S.C. App. 2, and after consultation with the General Services Administration, the Chairman of the Federal Deposit Insurance Corporation has determined that renewal of the FDIC Advisory Committee on Economic Inclusion (''the Committee'') is in the public interest in connection with the performance of duties imposed upon the FDIC by law. The Committee has been a successful undertaking by the FDIC and has provided valuable feedback to the agency on important initiatives focused on expanding access to banking services by underserved populations. The Committee will continue to provide advice and recommendations on initiatives to expand access to banking services by underserved populations. The Committee will continue to review

various issues that may include, but not be limited to, basic retail financial services such as check cashing, money orders, remittances, stored value cards, short-term loans, savings accounts, and other services to promote asset accumulation and financial stability. The structure and responsibilities of the Committee are unchanged from when it was originally established in November 2006. The Committee will continue to operate in accordance with the provisions of the Federal Advisory Committee Act.

FOR FURTHER INFORMATION CONTACT: Mr. Robert E. Feldman, Committee Management Officer of the FDIC, at (202) 898–7043.

Dated: December 3, 2008.

Federal Deposit Insurance Corporation.

Robert E. Feldman,

Committee Management Officer.

[FR Doc. E8–29126 Filed 12–9–08; 8:45 am]

BILLING CODE 6714–01–P

FEDERAL MARITIME COMMISSION

Notice of Agreements Filed

The Commission hereby gives notice of the filing of the following agreements under the Shipping Act of 1984. Interested parties may submit comments on agreements to the Secretary, Federal Maritime Commission, Washington, DC 20573, within ten days of the date this notice appears in the **Federal Register**. Copies of agreements are available through the Commission's Web site (*http://www.fmc.gov*) or contacting the Office of Agreements at (202) 523–5793 or *tradeanalysis@fmc.gov*.

Agreement No.: 011922–002.

Title: TNWA/GA Cooperative Working Agreement.

Parties: APL Co. Pte. Ltd.; American President Lines, Ltd.; Hyundai Merchant Marine Co., Ltd.; Mitsui O.S.K. Lines, Ltd.; Hapag-Lloyd AG; Nippon Yusen Kaisha; Orient Overseas Container Line Limited; Orient Overseas Container Line Inc.; and Orient Overseas Container Line (Europe) Limited.

Filing Party: Wayne R. Rohde, Esq.; Sher & Blackwell LLP; 1850 M Street, NW., Suite 900; Washington, DC 20036.

Synopsis: The amendment adds the ports of Los Angeles and Long Beach to the geographic scope of the agreement.

Agreement No.: 201176–001.

Title: License Agreement—Guam/Matson Navigation Co., Inc/Horizon Lines, Inc.

Parties: Horizon Lines, LLC; Matson Navigation Co.; and Port Authority of Guam.

Filing Party: Matthew J. Thomas; Troutman Sanders LLP; 401 9th Street, NW., Suite 1000; Washington, DC 20004–2134.

Synopsis: This amendment extends the deadline for Matson & Horizon to acquire and install the cranes and clarifies that the License Agreement does not affect any other Port charges.

By Order of the Federal Maritime Commission.

Dated: December 5, 2008.

Karen V. Gregory,

Secretary.

[FR Doc. E8–29176 Filed 12–9–08; 8:45 am]

BILLING CODE 6730–01–P

FEDERAL MARITIME COMMISSION

Ocean Transportation Intermediary License Applicants

Notice is hereby given that the following applicants have filed with the Federal Maritime Commission an application for license as a Non-Vessel Operating Common Carrier and Ocean Freight Forwarder—Ocean Transportation Intermediary pursuant to section 19 of the Shipping Act of 1984 as amended (46 U.S.C. Chapter 409 and 46 CFR part 515).

Persons knowing of any reason why the following applicants should not receive a license are requested to contact the Office of Transportation Intermediaries, Federal Maritime Commission, Washington, DC 20573.

Non-Vessel Operating Common Carrier Ocean Transportation Intermediary Applicants

AMS Container Line, Inc., 126 Orion Road, Piscataway, NJ 08854, Officer: Inderpal S. Khokhar, President (Qualifying Individual).

PATJAM Shipping Moving and Storage Inc., dba Patrick's Shipping, Inc., 3477 NW 19th Street, Lauderdale Lakes, FL 33311, Officers: Patrick McNeil, President, (Qualifying Individual), Terrance Pennicooke, Vice President.

AWOT Global LLC, 58 Aspen Way, Rolling Hills Estates, CA 90274, Officers: Michael T. Huang, President (Qualifying Individual), Diana T. Huang, Secretary.

Non-Vessel Operating Common Carrier and Ocean Freight Forwarder Transportation Intermediary Applicants:

The Pasha Group dba Asiatic Trans-Pacific, dba Pasha Distribution Services, Pasha Freight, CTC Transportation dba Pasha International, 5725 Paradise Drive, Ste. 1000, Corte Madera, CA 94925, Officer: Elaine Brown, Exec. Secretary (Qualifying Individual).

Astec North America Inc. dba Astec Logistics, 11461 NW 34th Street, Doral, FL 33178, Officer: Paulo H. Carvalho, President (Qualifying Individual).

NK America, Inc., 2640 Campbell Road, Sidney, OH 45365, Officers: Jaime J. Reyes, Vice President (Qualifying Individual), Masakatsu Kuroiwa, President.

Ocean Freight Forwarder—Ocean Transportation Intermediary Applicants:

Newesco, Inc. dba Nelson Westerberg International, 1500 Arthur Avenue, Elk Grove Village, IL 60007, Officers: John R. Westerberg, Chairman/CEO, Edward J. Pionke, President (Qualifying Individuals).

Tarraf Inc. dba Tarraf Shipping, 15846 W. Warren Avenue, Detroit, MI 48228, Officer: Mohamad Tarraf, President (Qualifying Individual).

Dated: December 5, 2008

Karen V. Gregory,

Secretary.

[FR Doc. E8–29175 Filed 12–9–08; 8:45 am]

BILLING CODE 6730–01–P

FEDERAL RESERVE SYSTEM

Formations of, Acquisitions by, and Mergers of Bank Holding Companies

The companies listed in this notice have applied to the Board for approval, pursuant to the Bank Holding Company Act of 1956 (12 U.S.C. 1841 *et seq.*) (BHC Act), Regulation Y (12 CFR Part 225), and all other applicable statutes and regulations to become a bank holding company and/or to acquire the assets or the ownership of, control of, or the power to vote shares of a bank or bank holding company and all of the banks and nonbanking companies owned by the bank holding company, including the companies listed below.

The applications listed below, as well as other related filings required by the Board, are available for immediate inspection at the Federal Reserve Bank indicated. The applications also will be available for inspection at the offices of the Board of Governors. Interested persons may express their views in writing on the standards enumerated in the BHC Act (12 U.S.C. 1842(c)). If the proposal also involves the acquisition of a nonbanking company, the review also includes whether the acquisition of the nonbanking company complies with the standards in section 4 of the BHC Act (12 U.S.C. 1843). Unless otherwise noted, nonbanking activities will be conducted throughout the United States.

Additional information on all bank holding companies may be obtained from the National Information Center website at *www.ffiec.gov/nic/*.

Unless otherwise noted, comments regarding each of these applications must be received at the Reserve Bank indicated or the offices of the Board of Governors not later than January 5, 2009.

A. Federal Reserve Bank of Richmond (A. Linwood Gill, III, Vice President) 701 East Byrd Street, Richmond, Virginia 23261–4528:

1. Armed Forces Benefit Association, AFBA Investment Trust, and 5Star Financial, LLC, all of Alexandria, Virginia, to become a bank holding company by acquiring 100 percent of the voting sshares of 5Star Bank, Colorado Springs, Colorado.

Board of Governors of the Federal Reserve System, December 5, 2008.

Jennifer J. Johnson,

Secretary of the Board.

[FR Doc. E8–29227 Filed 12–9–08; 8:45 am]

BILLING CODE 6210–01–S

FEDERAL TRADE COMMISSION

Granting of Request for Early Termination of the Waiting Period Under the Premerger Notification Rules

Section 7A of the Clayton Act, 15 U.S.C. 18a, as added by Title II of the Hart-Scott Rodino Antitrust Improvements Act of 1976, requires persons contemplating certain mergers or acquisitions to give the Federal Trade Commission and the Assistant Attorney General advance notice and to wait designated periods before consummation of such plans. Section 7A(b)(2) of the Act permits the agencies, in individual cases, to terminate this waiting period prior to its expiration and requires that notice of this action be published in the **Federal Register**.

The following transactions were granted early termination of the waiting period provided by law and the premerger notification rules. The grants were made by the Federal Trade Commission and the Assistant Attorney General for the Antitrust Division of the Department of Justice. Neither agency intends to take any action with respect to these proposed acquisitions during the applicable waiting period.

Trans No.	Acquiring	Acquired	Entities
TRANSACTIONS GRANTED EARLY TERMINATION—11/17/2008			
20090082	Bank of America Corporation	BlackRock, Inc	BlackRock, Inc.
20090098	Gemalto N.V	Wavecom S.A	Wavecom S.A.
20090101	Redpoint Ventures I, L.P	HomeAway, Inc	HomeAway, Inc.
20090102	Electric Power Development Company, Ltd.	Harbinger Independent Power Fund II	Equus GP Holdco LLP. Equus LP Holdco LLC. Equus Power I, LP. HD Freeport LLC. Pinelawn Power LLC.
20090103	Manulife Financial Corporation	Harbinger Independent Power Fund II, LLC.	Equus GP Holdco LLC. Equus GP Holdco LLP. Equus Power I, LP. HD Freeport LLC. Pinelawn Power LLC.
20090104	Golden Gate Capital Opportunity Fund, L.P.	Harbinger Capital Partners Offshore Fund, I, Ltd.	USS Holdings, Inc.
20090112	Trian Star Trust	Wendy's/Arby's Group. Inc	Wendy's/Arby's Group, Inc.
20090113	Trian Partners, L.P	Wendy's/Arby Group, Inc	Wendy's/Arby Group, Inc.
20090118	Blackstone Capital Partners III Merchant Banking Fund Services, Inc.	Republic Services, Inc	Republic Services, Inc.
20090119	Dayton-Cox Trust A	Comcast Corporation	SpectrumCo LLC.
20090120	Madrone Partners, LP	Solyndra, Inc	Solyndra, Inc.
TRANSACTIONS GRANTED EARLY TERMINATION—11/18/2008			
20090095	Walgreen Co	McKesson Corporation	ivpcare, inc. McKesson Specialty Pharmaceuticals LLC.
20090096	Novartis AG	Nektar Therapeutics	NektarTherapeutics.
TRANSACTIONS GRANTED EARLY TERMINATION—11/21/2008			
20090116	CHS Inc	Agri Co-op	Agri Co-op.
20090121	CenturyTel, Inc	Embarq Corporation	Embarq Corporation.
20090126	Plains Capital Corporation	First Southwest Partners, Ltd	First Southwest Holdings, Inc.
20090128	Eldorado Resorts, LLC	Tropicana Entertainment Holdings, LLC	Aztar Indiana Gaming Company, LLC.
20090129	Giorgio Armani S.p.A	Ong Beng Seng	Presidio Holdings Limited.
20090130	GenStar Capital Partners V, L.P	LTCG Holdings Corp	Long Term Care Group, Inc. Nation's Care, LLC.
20090133	Citigroup, Inc.	Schafer Corporation	Schafer Corporation.
TRANSACTIONS GRANTED EARLY TERMINATION 11/24/2008			
20090123	Bank of America Corporation	Markit Group Holdings Limited	Markit Group Holdings Limited.

Trans No.	Acquiring	Acquired	Entities
TRANSACTIONS GRANTED EARLY TERMINATION—11/26/2008			
20090125	Lloyds TSB Group plc	HBOS plc	HBOS plc.
20090132	Affymetrix, Inc	Panomics, Inc	Panomics, Inc.
TRANSACTIONS GRANTED EARLY TERMINATION—11/28/2008			
20090135	Green Equity Investors Side V, L.P	Whole Foods Market, Inc	Whole Foods Market, Inc.
20090136	Green Equity Investors V, L.P	Whole Foods Market, Inc	Whole Foods Market, Inc.

FOR FURTHER INFORMATION CONTACT: Sandra M. Peay, Contact Representative; or Renee Hallman, Contact Representative, Federal Trade Commission, Premerger Notification Office, Bureau of Competition, Room H–303, Washington, DC 20580, (202) 326–3100.

By Direction of the Commission.

Donald S. Clark,

Secretary.

[FR Doc. E8–29119 Filed 12–9–08; 8:45 am]

BILLING CODE 6750–01–M

GENERAL SERVICES ADMINISTRATION

Multiple Award Schedule Advisory Panel; Notification of Public Advisory Panel Meeting

AGENCY: U.S. General Services Administration (GSA).

ACTION: Notice.

SUMMARY: The U.S. General Services Administration's (GSA) Multiple Award Schedule Advisory Panel (MAS Panel), a Federal Advisory Committee, meeting scheduled for December 08, 2008 is cancelled.

Dated: December 4, 2008.

Theodore S. Haddad,

Chief Acquisition Officer, Office of the Chief Acquisition Officer, General Services Administration.

[FR Doc. E8–29152 Filed 12–9–08; 8:45 am]

BILLING CODE 6820–EP–P

DEPARTMENT OF HEALTH AND HUMAN SERVICES

National Institute for Occupational Safety and Health; Decision To Evaluate a Petition To Designate a Class of Employees at the Mallinckrodt Chemical Co., Destrehan Street Plant in St. Louis, MO, To Be Included in the Special Exposure Cohort

AGENCY: National Institute for Occupational Safety and Health (NIOSH), Department of Health and Human Services (HHS).

ACTION: Notice.

SUMMARY: The Department of Health and Human Services (HHS) gives notice as required by 42 CFR 83.12(e) of a decision to evaluate a petition to designate a class of employees at the Mallinckrodt Chemical Co., Destrehan Street Plant in St. Louis, Missouri, to be included in the Special Exposure Cohort under the Energy Employees Occupational Illness Compensation Program Act of 2000. The initial proposed definition for the class being evaluated, subject to revision as warranted by the evaluation, is as follows:

Facility: Mallinckrodt Chemical Co., Destrehan Street Plant.

Location: St. Louis, Missouri.

Job Titles and/or Job Duties: All employees who worked with uranium.

Period of Employment: January 1, 1958 to December 31, 1958.

FOR FURTHER INFORMATION CONTACT: Larry Elliott, Director, Office of Compensation Analysis and Support, National Institute for Occupational Safety and Health (NIOSH), 4676 Columbia Parkway, MS C–46, Cincinnati, OH 45226, Telephone 513–533–6800 (this is not a toll-free number). Information requests can also be submitted by e-mail to *OCAS@CDC.GOV*.

Dated: December 4, 2008.

Christine M. Branche,

Acting Director, National Institute for Occupational Safety and Health.

[FR Doc. E8–29247 Filed 12–9–08; 8:45 am]

BILLING CODE 4163–19–P

DEPARTMENT OF HEALTH AND HUMAN SERVICES

National Institute for Occupational Safety and Health; Decision To Evaluate a Petition To Designate a Class of Employees at the Metallurgical Laboratory in Chicago, IL, To Be Included in the Special Exposure Cohort

AGENCY: National Institute for Occupational Safety and Health (NIOSH), Department of Health and Human Services (HHS).

ACTION: Notice.

SUMMARY: The Department of Health and Human Services (HHS) gives notice as required by 42 CFR 83.12(e) of a decision to evaluate a petition to designate a class of employees at the Metallurgical Laboratory in Chicago, Illinois, to be included in the Special Exposure Cohort under the Energy Employees Occupational Illness Compensation Program Act of 2000. The initial proposed definition for the class being evaluated, subject to revision as warranted by the evaluation, is as follows:

Facility: Metallurgical Laboratory.

Location: Chicago, Illinois.

Job Titles and/or Job Duties: All Atomic Weapons Employer employees.

Period of Employment: August 13, 1942 through June 30, 1946.

FOR FURTHER INFORMATION CONTACT: Larry Elliott, Director, Office of Compensation Analysis and Support, National Institute for Occupational Safety and Health (NIOSH), 4676 Columbia Parkway, MS C–46, Cincinnati, OH 45226, Telephone 513–533–6800 (this is not a toll-free number). Information requests can also be submitted by e-mail to *OCAS@CDC.GOV*.

Dated: December 4, 2008.

Christine M. Branche,

Acting Director, National Institute for Occupational Safety and Health.

[FR Doc. E8–29245 Filed 12–9–08; 8:45 am]

BILLING CODE 4163–19–P

DEPARTMENT OF HEALTH AND HUMAN SERVICES

National Institute for Occupational Safety and Health; Decision To Evaluate a Petition To Designate a Class of Employees at the Vitro Manufacturing in Canonsburg, PA, To Be Included in the Special Exposure Cohort

AGENCY: National Institute for Occupational Safety and Health

(NIOSH), Department of Health and Human Services (HHS).

ACTION: Notice.

SUMMARY: The Department of Health and Human Services (HHS) gives notice as required by 42 CFR 83.12(e) of a decision to evaluate a petition to designate a class of employees at the Vitro Manufacturing in Canonsburg, Pennsylvania, to be included in the Special Exposure Cohort under the Energy Employees Occupational Illness Compensation Program Act of 2000. The initial proposed definition for the class being evaluated, subject to revision as warranted by the evaluation, is as follows:

Facility: Vitro Manufacturing.

Location: Canonsburg, Pennsylvania.

Job Titles and/or Job Duties: All Atomic Weapons Employer employees.

Period of Employment: August 13, 1942 through December 31, 1957.

FOR FURTHER INFORMATION CONTACT: Larry Elliott, Director, Office of Compensation Analysis and Support, National Institute for Occupational Safety and Health (NIOSH), 4676 Columbia Parkway, MS C–46, Cincinnati, OH 45226, Telephone 513–533–6800 (this is not a toll-free number). Information requests can also be submitted by e-mail to *OCAS@CDC.GOV*.

Dated: December 4, 2008.

Christine M. Branche,

Acting Director, National Institute for Occupational Safety and Health.

[FR Doc. E8–29244 Filed 12–9–08; 8:45 am]

BILLING CODE 4163–19–P

DEPARTMENT OF HEALTH AND HUMAN SERVICES

National Institute for Occupational Safety and Health

Final Effect of Designation of a Class of Employees for Addition to the Special Exposure Cohort

AGENCY: Centers for Disease Control and Prevention (CDC), Department of Health and Human Services (HHS).

ACTION: Notice.

SUMMARY: The Department of Health and Human Services (HHS) gives notice concerning the final effect of the HHS decision to designate a class of employees at Connecticut Aircraft Nuclear Engine Laboratory in Middletown, Connecticut, as an addition to the Special Exposure Cohort (SEC) under the Energy Employees Occupational Illness Compensation Program Act of 2000. On October 24, 2008, as provided for under 42 U.S.C. 7384q(b), the Secretary of HHS designated the following class of employees as an addition to the SEC:

All employees of the Department of Energy (DOE), its predecessor agencies, and DOE contractors or subcontractors who worked at the Connecticut Aircraft Nuclear Engine Laboratory in Middletown, CT, from January 1, 1958 through December 31, 1965 for a number of work days aggregating at least 250 work days occurring either solely under this employment or in combination with work days within the parameters established for one or more other classes of employees in the Special Exposure Cohort.

This designation became effective on November 23, 2008, as provided for under 42 U.S.C. 7384*l*(14)(C). Hence, beginning on November 23, 2008, members of this class of employees, defined as reported in this notice, became members of the Special Exposure Cohort.

FOR FURTHER INFORMATION CONTACT: Larry Elliott, Director, Office of Compensation Analysis and Support, National Institute for Occupational Safety and Health (NIOSH), 4676 Columbia Parkway, MS C–46, Cincinnati, OH 45226, Telephone 513–533–6800 (this is not a toll-free number). Information requests can also be submitted by e-mail to *OCAS@CDC.GOV*.

Dated: December 5, 2008.

Christine M. Branche,

Acting Director, National Institute for Occupational Safety and Health.

[FR Doc. E8–29246 Filed 12–9–08; 8:45 am]

BILLING CODE 4163–19–P

DEPARTMENT OF HEALTH AND HUMAN SERVICES

Office of the Secretary

Findings of Scientific Misconduct

AGENCY: Office of the Secretary, HHS.

ACTION: Notice.

SUMMARY: Notice is hereby given that the Office of Research Integrity (ORI) and the Assistant Secretary for Health have taken final action in the following case:

Homer D. Venters, Jr., M.D., University of Illinois at Urbana-Champaign: Based on the report of an investigation conducted by the University of Illinois at Urbana-Champaign (UIUC) and extensive additional image analysis conducted by the Office of Research Integrity (ORI), the U.S. Public Health Service (PHS) found that Dr. Homer D. Venters, former graduate student, Neuroscience Program, UIUC, engaged in scientific misconduct in research supported by National Institute of Mental Health (NIMH), National Institutes of Health (NIH), awards R01 MH051569 and F30 MH12558 and National Institute on Aging (NIA), NIH, award R01 AG06246.

Specifically, PHS found that the Respondent committed misconduct in science:

- By intentionally and knowingly preparing and including duplicate image data in Figures 5 and 10 of PHS fellowship application F31 MH12558, ''Neurodegeneration via TNF-alpha inhibition of IGF–1,'' submitted in 1999, which was funded as F30 MH12558 from June 1, 2000, to May 31, 2003. Because the duplicate data were labeled as having been obtained from different experiments, the results for at least one of the two figures were intentionally falsified and constitute an act of scientific misconduct.
- By intentionally and knowingly preparing and including duplicate image data in Figure 3 and/or 4 of a manuscript submitted and published as: Venters, H.D., *et al.* ''A New Mechanism of Neurodegeneration: A Proinflammatory Cytokine Inhibits Receptor Signaling by a Survival Peptide.'' *Proceedings of the National Academy of Sciences U.S.A.* 96:9879–9884, 1999.
- By preparing and providing to his dissertation committee in March 2000 a thesis proposal entitled ''An Alternate Mechanism of Neurodegeneration: Silencing of Insulin-like Growth Factor-I survival signals by Tumor Necrosis Factor-a,'' which contained five falsified figures: Figures 1.3, 1.4a, 2.1b, 2.3e, and 2.5b. In each figure, he reused data within the same figure or in another thesis proposal figure as representing differently treated samples or as data obtained with different immunoblotting antisera.
- In March and April 2001, Respondent included several of the same falsified figures as in the thesis proposal and multiple additional falsified figures in his dissertation ''Silencing of Insulin-like Growth Factor I Neuronal Survival Signals by Tumor Necrosis Factor-a.'' In all, Figures 3.3, 3.4a, 3.4b, 4.1b, 4.3a, 4.5b, 5.1a, 5.2, 5.4a, 5.5a, 5.6a, 5.7a, and 5.8a were falsified. In each instance, he assembled figures by reusing significant data, on some occasions after manipulating the orientation of the data, either within the same figure or in other figures related to his thesis and represented the data falsely as coming from different samples or different experiments.

Dr. Venters has entered into a Voluntary Settlement Agreement

(Agreement) in which he has voluntarily agreed, for a period of three (3) years, beginning on November 19, 2008:

(1) That any institution that submits an application for PHS support for a research project on which the Respondent's participation is proposed or that uses the Respondent in any capacity on PHS-supported research, or that submits a report of PHS-funded research in which the Respondent is involved, must concurrently submit a plan for monitoring of the Respondent's research to the funding agency and ORI for approval; the monitoring plan must be designed to ensure the scientific integrity of the Respondent's research contribution; Respondent agreed that he will not participate in any PHS-supported research until such a monitoring plan is submitted to ORI and the funding agency;

(2) That Respondent will ensure that any institution employing him will submit to ORI, in conjunction with each application for PHS funds or report, manuscript, or abstract of PHS-funded research in which the Respondent is involved, a certification that the data provided by the Respondent are based on actual experiments or are otherwise legitimately derived, and that the data analyses, procedures, and methodology are accurately reported in the application or report; Respondent must ensure that the institution sends a copy of each certification to ORI; and

(3) To exclude himself from serving in any advisory capacity to PHS, including but not limited to service on any PHS advisory committee, board, and/or peer review committee, or as a consultant or contractor to PHS.

Respondent also voluntarily agreed that within 30 days of the effective date of this Agreement:

(4) He will submit a letter to the journal editor, with copies to his coauthors, identifying his falsification of Figures 3 and/or 4 in the following article: Venters *et al.* ''A New Mechanism of Neurodegeneration: A Proinflammatory Cytokine Inhibits Receptor Signaling by a Survival Peptide.'' *Proceedings of the National Academy of Sciences* 96:9879–9884, 1999.

FOR FURTHER INFORMATION CONTACT: Director, Division of Investigative Oversight, Office of Research Integrity, 1101 Wootton Parkway, Suite 750, Rockville, MD 20852, (240) 453–8800.

Chris B. Pascal,

Director, Office of Research Integrity.

[FR Doc. E8–29203 Filed 12–9–08; 8:45 am]

BILLING CODE 4150–31–P

DEPARTMENT OF HEALTH AND HUMAN SERVICES

Health Resources And Services Administration

Agency Information Collection Activities: Proposed Collection: Comment Request

In compliance with the requirement for opportunity for public comment on proposed data collection projects (section 3506(c)(2)(A) of Title 44, United States Code, as amended by the Paperwork Reduction Act of 1995, Pub. L. 104–13), the Health Resources and Services Administration (HRSA) publishes periodic summaries of proposed projects being developed for submission to OMB under the Paperwork Reduction Act of 1995. To request more information on the proposed project or to obtain a copy of the data collection plans and draft instruments, call the HRSA Reports Clearance Officer on (301) 443–1129.

Comments are invited on: (a) Whether the proposed collection of information is necessary for the proper performance of the functions of the agency, including whether the information shall have practical utility; (b) the accuracy of the agency's estimate of the burden of the proposed collection of information; (c) ways to enhance the quality, utility, and clarity of the information to be collected; and (d) ways to minimize the burden of the collection of information on respondents, including through the use of automated collection techniques or other forms of information technology.

Proposed Project: Health Centers Patient Survey—(NEW)

The Health Center program supports Community Health Centers (CHCs), Migrant Health Centers (MHCs), Health Care for the Homeless (HCH) projects, and Public Housing Primary Care (PHPC) programs. Health Centers (HCs) receive grants from HRSA to provide primary and preventive health care services to medically underserved populations.

The proposed Patient Survey will collect in-depth information about HC patients, their health status, the reasons they seek care at HCs, their diagnoses, the services they utilize at HCs and elsewhere, the quality of those services, and their satisfaction with the care they receive, through personal interviews of a stratified random sample of HC patients. Interviews are planned to take approximately 1 hour and six minutes each.

The Patient Survey builds on previous periodic User-Visit Surveys which were conducted to learn about the process and outcomes of care in CHCs and HCH projects. The original questionnaires were derived from the National Health Interview Survey (NHIS) and the National Hospital Ambulatory Medical Care Survey (NHAMCS) conducted by the National Center for Health Statistics (NCHS). Conformance with the NHIS and NHAMCS allowed comparisons between these NCHS surveys and the previous CHC and HCH User-Visit Surveys. The new Patient Survey was developed using a questionnaire methodology similar to that used in the past, and will also potentially allow some longitudinal comparisons for CHCs and HCH projects with the previous User-Visit survey data, including monitoring of process outcomes over time. In addition, this survey will include interviews of patients drawn from migrant populations and from residents of public housing, populations not included in the previous surveys.

The estimated response burden for the survey is as follows:

SURVEY

Type of respondent; activity involved	Number of respondents	Responses per respondent	Total number of responses	Burden per response (hours)	Total hour burden
Grantee/Site Recruitment and Site Training	115	3	345	3.75	1294
Patient Recruitment	5658	1	5658	.167	945
Patient Survey 4526	4526	1	4526	1.1	4979
Total	5773		10529		7218

E-mail comments to *paperwork@hrsa.gov* or mail the HRSA Reports Clearance Officer, Room 10–33, Parklawn Building, 5600 Fishers Lane, Rockville, MD 20857. Written comments should be received within 60 days of this notice.

Wendy Ponton,

Director, Office of Management.

[FR Doc. E8–29202 Filed 12–9–08; 8:45 am]

BILLING CODE 4165–15–P

DEPARTMENT OF HEALTH AND HUMAN SERVICES

National Institutes of Health

Proposed Collection: Comment Request; Revision of OMB No. 0925–0001/exp. 1/30/10, ''Research and Research Training Grant Applications and Related Forms''

SUMMARY: In compliance with the requirement of Section 3506(c)(2)(A) of the Paperwork Reduction Act of 1995, for opportunity for public comment on proposed data collection projects, the Office of Extramural Research, the National Institutes of Health (NIH) will publish periodic summaries of proposed projects to be submitted to the Office of Management and Budget (OMB) for review and approval.

Proposed Collection: Title: Research and Research Training Grant Applications and Related Forms. *Type of Information Collection Request:* Revision, OMB 0925–0001, Expiration Date 11/30/10. *Form Numbers:* PHS 398, 2590, 2271, 3734 and HHS 568.

Need and Use of Information Collection: The application is used by applicants to request Federal assistance for research and research-related training. The other related forms are used for trainee appointment, final invention reporting, and to relinquish rights to a research grant.

Frequency of response: Applicants may submit applications for published receipt dates. If awarded, annual progress is reported and trainees may be appointed or reappointed.

Affected Public: Individuals or Households; Business or other for-profit; Not-for-profit institutions; Federal Government; and State, Local or Tribal Government.

Type of Respondents: Adult scientific professionals. The annual reporting burden is as follows:

Estimated Number of Respondents: 160,135;

Estimated Number of Responses per Respondent: 1;

Average Burden Hours per Response: 14; and

Estimated Total Annual Burden Hours Requested: 2,251,500. The estimated annualized cost to respondents is $78,802,500.

Request for Comments: Written comments and/or suggestions from the public and affected agencies are invited on one or more of the following points: (1) Whether the proposed collection of information is necessary for the proper performance of the function of the agency, including whether the information will have practical utility; (2) The accuracy of the agency's estimate of the burden of the proposed collection of information, including the validity of the methodology and assumptions used; (3) Ways to enhance the quality, utility, and clarity of the information to be collected; and (4) Ways to minimize the burden of the collection of information on those who are to respond, including the use of appropriate automated, electronic, mechanical, or other technological collection techniques or other forms of information technology.

FOR FURTHER INFORMATION CONTACT: To request more information on the proposed project or to obtain a copy of the data collection plans and instruments, contact Ms. Mikia Currie, Division of Grants Policy, Office of Policy for Extramural Research Administration, NIH, Rockledge 1 Building, Room 3505, 6705 Rockledge Drive, Bethesda, MD 20892–7974, or call non-toll-free number 301–435–0941, or E-mail your request, including your address to: [*curriem@od.nih.gov*].

Comments Due Date: Comments regarding this information collection are best assured of having their full effect if received within 60 days of the date of this publication.

Dated: December 4, 2008.

Joe Ellis,

Director, OPERA, OER, National Institutes of Health.

[FR Doc. E8–29147 Filed 12–9–08; 8:45 am]

BILLING CODE 4140–01–P

DEPARTMENT OF HEALTH AND HUMAN SERVICES

National Institutes of Health

Government-Owned Inventions; Availability for Licensing

AGENCY: National Institutes of Health, Public Health Service, HHS.

ACTION: Notice.

SUMMARY: The inventions listed below are owned by an agency of the U.S. Government and are available for licensing in the U.S. in accordance with 35 U.S.C. 207 to achieve expeditious commercialization of results of federally-funded research and development. Foreign patent applications are filed on selected inventions to extend market coverage for companies and may also be available for licensing.

ADDRESSES: Licensing information and copies of the U.S. patent applications listed below may be obtained by writing to the indicated licensing contact at the Office of Technology Transfer, National Institutes of Health, 6011 Executive Boulevard, Suite 325, Rockville, Maryland 20852–3804; telephone: 301/496–7057; fax: 301/402–0220. A signed Confidential Disclosure Agreement will be required to receive copies of the patent applications.

Discovery of Novel Pharmacophores Inhibiting the Growth of Mycobacterium tuberculosis

Description of Technology: Tuberculosis (TB) caused by *Mycobacterium tuberculosis* infects roughly one third of the world population and approximately 8 million people develop TB annually. The emergence of multi-drug resistant (MDR) and extensively drug-resistant (XDR) TB strains highlight the need for new drugs against TB. The inventions described herein are small molecules with drug-like properties that inhibit the growth of *Mycobacterium tuberculosis*. The compounds were discovered utilizing high-throughput screening of a 101,000 compound library. Three hundred active compounds inhibit *Mycobacterium tuberculosis* growth by 90% or greater in *in vitro* assays with MIC values ranging from 1.6 to less than 0.1 micrograms/ml, and showing minimal toxicity in tissue culture cells. Structure similarity analyses of the compounds reveal 44 chemical clusters representing 250 active compounds.

Applications: Treatment of TB infections.

Advantages: Novel drug candidates against TB.

Development Status: In vitro data can be provided upon request.

Market: TB therapeutics.

Inventors: Robert C. Goldman (NIAID) *et al.*

Publications: Manuscript in preparation.

Patent Status: U.S. Provisional Application No. 61/092,710 filed 28 Aug 2008 (HHS Reference No. E–310–2008/0–US–01).

Licensing Status: Available for exclusive or non-exclusive licensing.

Licensing Contact: Kevin W. Chang, Ph.D.; 301–435–5018; *changke@mail.nih.gov*.

Collaborative Research Opportunity: The NIAID, OTD, is seeking statements of capability or interest from parties interested in collaborative research to further develop, evaluate, or commercialize this ''Discovery of Novel Pharmacophores Inhibiting the Growth of Mycobacterium Tuberculosis''. Please contact Anna Amar at 301–451–3525 for more information.

A Varicella-Zoster Virus Mutant That Is Markedly Impaired for Latent Infection Available for the Development of Shingles Vaccines and Diagnostics

Description of Technology: Reactivation of latent Varicella-Zoster virus (VZV) infection is the cause of shingles, which is prominent in adults over the age of 60 and individuals who have compromised immune systems, due to HIV infection, cancer treatment and/or transplant. Shingles is a worldwide health concern that affects approximately 600,000 Americans each year. The incidence of shingles is also high in Europe, South America, and India; the latter having an estimated two million individuals affected, yearly. Recent research studies show that VZV vaccines have a significant effect on decreasing the incidence of shingles in elderly.

The current technology describes compositions, cells and methods related to the production and use of a mutant VZV and the development of vaccines against the infectious agent. Latent VZV expresses a limited repertoire of viral genes including the following six open reading frames (ORFs): 4, 21, 29, 62, 63, and 66. The present invention describes an ORF29 mutant VZV that demonstrates a weakened ability to establish latency in animal studies. The current technology provides methods for using the mutant in the development of live vaccines and diagnostic tools. A related invention is described in PCT/US05/021788 (publication number WO2006012092).

Applications: Development of vaccines and diagnostics for prevention of shingles.

Development Status: Pre-clinical studies have been performed to demonstrate the reduced latency of the ORF29 mutant VZV in animals.

Inventors: Jeffrey Cohen (NIAID) and Lesley Pesnicak (NIAID).

Patent Status: U.S. Provisional Application No. 60/857,766 filed 09 Nov 2006 (HHS Reference No. E–029–2007/0–US–01); PCT Application No. PCT/US2007/084331 filed 09 Nov 2007, which published as WO 2008/079539 on 03 Jul 2008 (HHS Reference No. E–029–2007/0–PCT–02).

Licensing Status: Available for licensing and commercial development.

Licensing Contact: Kevin W. Chang, Ph.D.; 301–435–5018; *changke@mail.nih.gov*.

Collaborative Research Opportunity: The NIAID Laboratory of Clinical Infectious Diseases is seeking statements of capability or interest from parties interested in collaborative research to further develop, evaluate, or commercialize vaccine strains of VZV vaccine with impaired latency. Please contact Kelly Murphy, J.D., M.S., at 301/451–3523 or *murphykt@niaid.nih.gov* for more information.

Anti-Plasmodium Compositions and Methods of Use

Description of Technology: The present invention comprises peptides/antibodies specific for the binding proteins of *Plasmodium*, a parasite responsible for malaria, hence in effect blocking the parasite's binding to the erythrocytes. Also included are methods for their use in preventing, diagnosing or treating the related infections.

Although malaria is virtually eradicated in the United States, it continues to be one of the most serious infectious diseases in the world, killing millions of people each year in the countries throughout Africa, Asia and Latin America. In fact, over 41% of the world population lives in the regions affected by malaria. *In vitro* studies using the antibodies described in the current technology showed ~80% reduction in the number of blood cells infected with *Plasmodium* parasite. Infectivity studies using peptides demonstrated that they are also specifically able to prevent binding of parasites to blood cells. The claimed antibodies and peptides can also be used for immunization of humans and animals, or for development of diagnostic kits capable of detecting the presence, localization and quantity of the *Plasmodium* parasites in tissues and cells.

Applications: Diagnostics development; Vaccines development.

Inventors: David L. Narum and Kim Lee Sim (NIAID).

Relevant Publications:

1. Sim BK, Narum DL, Liang H, Fuhrmann SR, Obaldia N 3rd, Gramzinski R, Aguiar J, Haynes JD, Moch JK, Hoffman SL. Induction of biologically active antibodies in mice, rabbits, and monkeys by Plasmodium falciparum EBA–175 region II DNA vaccine. Mol Med. 2001 Apr;7(4):247–254.

2. Narum DL, Haynes JD, Fuhrmann S, Moch K, Liang H, Hoffman SL, Sim BK. Antibodies against the *Plasmodium falciparum* receptor binding domain of EBA–175 block invasion pathways that do not involve sialic acids. Infect Immun. 2000 Apr;68(4):1964–1966.

3. Liang H, Narum DL, Fuhrmann SR, Luu T, Sim BK. A recombinant baculovirus-expressed *Plasmodium falciparum* receptor-binding domain of erythrocyte binding protein EBA–175 biologically mimics native protein. Infect Immun. 2000 Jun;68(6):3564–3568.

Patent Status: HHS Reference No. E–004–2004/2—

- U.S. Patent No. 7,025,961 issued 11 Apr 2006
- Australian Patent No. 20042011615 issued 11 May 2007
- Canadian Application No. CA236247
- Japanese Application No. JP2000–602280 (published as JP,2002–540770,A)

Licensing Status: Available for exclusive or non-exclusive licensing.

Licensing Contact: RC Tang, JD, LLM; 301–435–5031; *tangr@mail.nih.gov*

Dated: *December 1, 2008.*

Richard U. Rodriguez,

Director, Division of Technology Development and Transfer, Office of Technology Transfer, National Institutes of Health.

[FR Doc. E8–29146 Filed 12–9–08; 8:45 am]

BILLING CODE 4140–01–P

DEPARTMENT OF HEALTH AND HUMAN SERVICES

Substance Abuse and Mental Health Services Administration

Mandatory Guidelines for Federal Workplace Drug Testing Programs

Correction

In notice document E8–26726 beginning on page 71858 in the issue ofTuesday, November 25, 2008, make the following correction:

On page 71858, in the first column, under the **DATES** heading, in the first line, ''*Effective Date:* March 25, 2008'' shouldread ''*Effective Date:* May 1, 2010''.

[FR Doc. Z8–26726 Filed 12–9–08; 8:45 am]

BILLING CODE 1505–01–D

DEPARTMENT OF HOMELAND SECURITY

Federal Emergency Management Agency

[FEMA–1810–DR]

California; Amendment No. 2 to Notice of a Major Disaster Declaration

AGENCY: Federal Emergency Management Agency, DHS.

ACTION: Notice.

SUMMARY: This notice amends the notice of a major disaster declaration for the State of California (FEMA–1810–DR), dated November 18, 2008, and related determinations.

DATES: *Effective Date:* November 28, 2008.

FOR FURTHER INFORMATION CONTACT: Peggy Miller, Disaster Assistance Directorate, Federal Emergency Management Agency, 500 C Street, SW., Washington, DC 20472, (202) 646–3886.

SUPPLEMENTARY INFORMATION: Notice is hereby given that the incident period for this disaster is closed effective November 28, 2008.

The following Catalog of Federal Domestic Assistance Numbers (CFDA) are to be used for reporting and drawing funds: 97.030, Community Disaster Loans; 97.031, Cora Brown Fund; 97.032, Crisis Counseling; 97.033, Disaster Legal Services; 97.034, Disaster Unemployment Assistance (DUA); 97.046, Fire Management Assistance Grant; 97.048, Disaster Housing Assistance to Individuals and Households In Presidentially Declared Disaster Areas; 97.049, Presidentially Declared Disaster Assistance—Disaster Housing Operations for Individuals and Households; 97.050, Presidentially Declared Disaster Assistance to Individuals and Households—Other Needs; 97.036, Disaster Grants—Public Assistance (Presidentially Declared Disasters); 97.039, Hazard Mitigation Grant.

R. David Paulison,

Administrator, Federal Emergency Management Agency.

[FR Doc. E8–29159 Filed 12–9–08; 8:45 am]

BILLING CODE 9111–23–P

DEPARTMENT OF HOMELAND SECURITY

Federal Emergency Management Agency

[FEMA–1809–DR]

Missouri; Amendment No. 2 to Notice of a Major Disaster Declaration

AGENCY: Federal Emergency Management Agency, DHS.

ACTION: Notice.

SUMMARY: This notice amends the notice of a major disaster declaration for the State of Missouri (FEMA–1809–DR), dated November 13, 2008, and related determinations.

DATES: *Effective Date:* December 2, 2008.

FOR FURTHER INFORMATION CONTACT: Peggy Miller, Disaster Assistance Directorate, Federal Emergency Management Agency, 500 C Street, SW., Washington, DC 20472, (202) 646–3886.

SUPPLEMENTARY INFORMATION: The notice of a major disaster declaration for the State of Missouri is hereby amended to include the following areas among those areas determined to have been adversely affected by the event declared a major disaster by the President in his declaration of November 13, 2008.

Howell County for Individual Assistance (already designated for Public Assistance).

Jefferson County for Individual Assistance.

The following Catalog of Federal Domestic Assistance Numbers (CFDA) are to be used for reporting and drawing funds: 97.030, Community Disaster Loans; 97.031, Cora Brown Fund; 97.032, Crisis Counseling; 97.033, Disaster Legal Services; 97.034, Disaster Unemployment Assistance (DUA); 97.046, Fire Management Assistance Grant; 97.048, Disaster Housing Assistance to Individuals and Households In Presidentially Declared Disaster Areas; 97.049, Presidentially Declared Disaster Assistance—Disaster Housing Operations for Individuals and Households; 97.050 Presidentially Declared Disaster Assistance to Individuals and Households—Other Needs; 97.036, Disaster Grants—Public Assistance (Presidentially Declared Disasters); 97.039, Hazard Mitigation Grant.

R. David Paulison,

Administrator, Federal Emergency Management Agency.

[FR Doc. E8–29160 Filed 12–9–08; 8:45 am]

BILLING CODE 9111–23–P

DEPARTMENT OF HOMELAND SECURITY

Federal Emergency Management Agency

[FEMA–1791–DR]

Texas; Amendment No. 14 to Notice of a Major Disaster Declaration

AGENCY: Federal Emergency Management Agency, DHS.

ACTION: Notice.

SUMMARY: This notice amends the notice of a major disaster for the State of Texas (FEMA–1791–DR), dated September 13, 2008, and related determinations.

DATES: *Effective Date:* November 26, 2008.

FOR FURTHER INFORMATION CONTACT: Peggy Miller, Disaster Assistance Directorate, Federal Emergency Management Agency, 500 C Street, SW., Washington, DC 20472, (202) 646–3886.

SUPPLEMENTARY INFORMATION: Notice is hereby given that, in a letter dated November 26, 2008, the President amended the cost-sharing arrangements regarding Federal funds provided under the authority of the Robert T. Stafford Disaster Relief and Emergency Assistance Act, 42 U.S.C. 5121–5207 (the Stafford Act), in a letter to R. David Paulison, Administrator, Federal Emergency Management Agency, Department of Homeland Security, as follows:

I have determined that the damage in certain areas of Texas, resulting from Hurricane Ike during the period of September 7 to October 2, 2008, is of sufficient severity and magnitude that special conditions are warranted regarding the cost-sharing arrangement concerning Federal funds provided under the Robert T. Stafford Disaster Relief and Emergency Assistance Act, 42 U.S.C. §§ 5121–5207 (the Stafford Act).

Therefore, I amend my previous declarations of September 13, 2008, September 16, 2008, and October 8, 2008, and authorize Federal funds for assistance for debris removal (Category A), including direct Federal assistance, under the Public Assistance program, at 100 percent of the total eligible costs for an additional six months immediately following the previous 44-day period.

This adjustment to State and local cost sharing applies only to Public Assistance costs and direct Federal assistance eligible for such adjustments under the law. The law specifically prohibits a similar adjustment for funds provided to States for Other Needs Assistance (Section 408) and the Hazard Mitigation Grant Program (Section 404). These funds will continue to be reimbursed at 75 percent of total eligible costs.

This cost share is effective as of the date of the President's major disaster declaration.

(The following Catalog of Federal Domestic Assistance Numbers (CFDA) are to be used for reporting and drawing funds: 97.030, Community Disaster Loans; 97.031, Cora Brown Fund; 97.032, Crisis Counseling; 97.033, Disaster Legal Services; 97.034, Disaster Unemployment Assistance (DUA); 97.046, Fire Management Assistance Grant; 97.048, Disaster Housing Assistance to Individuals and Households in Presidentially Declared Disaster Areas; 97.049, Presidentially Declared Disaster Assistance—Disaster Housing Operations for Individuals and Households; 97.050 Presidentially Declared Disaster Assistance to Individuals and Households—Other Needs; 97.036, Disaster Grants—Public Assistance

(Presidentially Declared Disasters); 97.039, Hazard Mitigation Grant.

R. David Paulison,

Administrator, Federal Emergency Management Agency.

[FR Doc. E8–29158 Filed 12–9–08; 8:45 am]

BILLING CODE 9110–23–P

DEPARTMENT OF THE INTERIOR

Fish and Wildlife Service

[FWS-R7-SM-2008-N0309] [70101-1261-0000-L6]

Proposed Information Collection; OMB Control Number 1018-0120; Federal Subsistence Regional Advisory Council Membership Application/ Nomination and Interview Forms

AGENCY: Fish and Wildlife Service, Interior.

ACTION: Notice; request for comments.

SUMMARY: We (Fish and Wildlife Service) will ask the Office of Management and Budget (OMB) to approve the information collection (IC) described below. As required by the Paperwork Reduction Act of 1995 and as part of our continuing efforts to reduce paperwork and respondent burden, we invite the general public and other Federal agencies to take this opportunity to comment on this IC. This IC is scheduled to expire on March 31, 2009. We may not conduct or sponsor and a person is not required to respond to a collection of information unless it displays a currently valid OMB control number.

DATES: Your comments must be received by February 9, 2009.

ADDRESSES: Send your comments on the IC to Hope Grey, Information Collection Clearance Officer, Fish and Wildlife Service, MS 222–ARLSQ, 4401 North Fairfax Drive, Arlington, VA 22203 (mail), or *hope_grey@fws.gov* (e-mail).

FOR FURTHER INFORMATION CONTACT: To request additional information about this ICR, contact Hope Grey by mail or e-mail (see ADDRESSES) or by telephone at (703) 358–2482.

SUPPLEMENTARY INFORMATION:

I. Abstract

Title VIII of the Alaska National Interest Lands Conservation Act (16 U.S.C. 3101) designates the Departments of the Interior and Agriculture as the key agencies responsible for implementing the subsistence priority on Federal public lands for rural Alaska residents. These responsibilities include the establishment of Regional Councils with members from each region who are knowledgeable about the region and subsistence uses of the public lands. One-third of the seats on the Regional Councils become vacant each year. Additional vacancies may occur due to resignations or deaths of sitting members.

Each person desiring to serve on a Regional Council must complete FWS Form 3-2321 (Federal Subsistence Regional Advisory Council Membership Application/Nomination). Persons nominating other individuals for membership must also complete this form. Applicants must provide three references and information on:

(1) Their knowledge of fish and wildlife resources as well as subsistence and other uses of the resources.

(2) Their service on working groups, conservation committees, etc.

(3) How they would represent the people in the region.

(4) Their willingness to travel and attend meetings.

Federal staff will use FWS Form 3-2322 (Regional Advisory Council Candidate Interview Form) to conduct applicant interviews by telephone. Respondents do not see the printed form. Interviewers will ask questions regarding the applicant's willingness to serve on the Regional Council and will ask the applicant to explain information provided on FWS Form 3-2321.

Federal staff will use FWS Form 3-2323 (Regional Council Reference/Key Contact Interview Form) to conduct interviews of references/key contacts for prospective Regional Council members. We conduct all interviews by telephone and the respondents do not see the printed form. Interviewers will ask questions about the applicant's:

(1) Knowledge of fish and wildlife resources as well as subsistence practices and commercial/sport activities.

(2) Leadership ability.

(3) Ability to communicate.

The Federal Subsistence Board uses this information to make recommendations to the Secretary of the Interior for appointment of members to the Regional Councils. We restrict the information collected to the Regional Council member selection process and only to staff that the Federal Subsistence Board deems necessary. The information collections in this program are part of a system of records covered by the Privacy Act (5 U.S.C. 552(a)).

II. Data

OMB Control Number: 1018-0120.

Title: Federal Subsistence Regional Advisory Council Membership Application/Nomination and Interview Forms.

Service Form Number(s): FWS Forms 3-2321, 3-2322, and 3-2323.

Type of Request: Extension of currently approved collection.

Affected Public: Alaska residents.

Respondent's Obligation: Required to obtain or retain a benefit.

Frequency of Collection: On occasion.

Activity	Number of annual respondents	Number of annual responses	Completion time per response	Annual burden hours
FWS Form 3-2321	100	100	2 hours	200
FWS Form 3-2322	100	100	30 minutes	50
FWS Form 3-2323	400	400	15 minutes	100
Totals	600	600		350

III. Request for Comments

We invite comments concerning this IC on:

(1) whether or not the collection of information is necessary, including whether or not the information will have practical utility;

(2) the accuracy of our estimate of the burden for this collection of information;

(3) ways to enhance the quality, utility, and clarity of the information to be collected; and

(4) ways to minimize the burden of the collection of information on respondents.

Comments that you submit in response to this notice are a matter of public record. We will include and/or summarize each comment in our request to OMB to approve this IC. Before including your address, phone number, e-mail address, or other personal identifying information in your comment, you should be aware that your entire comment, including your personal identifying information, may be made publicly available at any time. While you can ask us in your comment to withhold your personal identifying

information from public review, we cannot guarantee that we will be able to do so.

Dated: November 6, 2008

Hope Grey,

Information Collection Clearance Officer, Fish and Wildlife Service.

FR Doc. E8–29138 Filed 12–9–08; 8:45 am

BILLING CODE 4310–55–S

DEPARTMENT OF THE INTERIOR

Fish and Wildlife Service

[FWS-R5-FHC-2008-N0330] [51320-1334-0000 L4]

Information Collection Sent to the Office of Management and Budget (OMB) for Approval; OMB Control Number 1018-0127; Horseshoe Crab Tagging Program

AGENCY: Fish and Wildlife Service, Interior.

ACTION: Notice; request for comments.

SUMMARY: We (Fish and Wildlife Service) have sent an Information Collection Request (ICR) to OMB for review and approval. The ICR, which is summarized below, describes the nature of the collection and the estimated burden and cost. This ICR is scheduled to expire on December 31, 2008. We may not conduct or sponsor and a person is not required to respond to a collection of information unless it displays a currently valid OMB control number. However, under OMB regulations, we may continue to conduct or sponsor this information collection while it is pending at OMB.

DATES: You must send comments on or before January 9, 2009.

ADDRESSES: Send your comments and suggestions on this ICR to the Desk Officer for the Department of the Interior at OMB-OIRA at (202) 395-6566 (fax) or OIRA_DOCKET@OMB.eop.gov (e-mail). Please provide a copy of your comments to Hope Grey, Information Collection Clearance Officer, Fish and Wildlife Service, MS 222-ARLSQ, 4401 North Fairfax Drive, Arlington, VA 22203 (mail) or hope_grey@fws.gov (e-mail).

FOR FURTHER INFORMATION CONTACT: To request additional information about this ICR, contact Hope Grey by mail or e-mail (see ADDRESSES) or by telephone at (703) 358–2482.

SUPPLEMENTARY INFORMATION:

OMB Control Number: 1018-0127.

Title: Horseshoe Crab Tagging Program.

Service Form Number(s): FWS Forms 3-2310 and 3-2311.

Type of Request: Extension of currently approved collection.

Affected Public: Tagging agencies include Federal and State agencies, universities, and biomedical companies. Members of the general public provide recapture information.

Respondent's Obligation: Voluntary.

Frequency of Collection: On occasion. When horseshoe crabs are tagged and when horseshoe crabs are found or captured.

Activity	Number of annual respondents	Number of annual responses	Completion time per response	Annual burden hours
FWS Form 3-2310	500	1,500	10 minutes	250
FWS Form 3-2311	10	10	73 hours*	730
Totals	510	1,510		980

*Average time required per response is dependent on the number of tags applied by an agency in 1 year. Agencies tag between 25 and 9,000 horseshoe crabs annually, taking between 2 to 5 minutes per crab to tag. Each agency determines the number of tags it will apply.

Abstract: Horseshoe crabs play a vital role commercially, biomedically, and ecologically along the Atlantic coast. Horseshoe crabs are commercially harvested and used as bait in eel and conch fisheries. Biomedical companies along the coast also collect and bleed horseshoe crabs at their facilities. Limulus Amoebocyte Lysate is derived from crab blood, which has no synthetic substitute, and is used by pharmaceutical companies to test sterility of products. Finally, migratory shorebirds also depend on the eggs of horseshoe crabs to refuel on their migrations from South America to the Arctic. One bird in particular, the red knot, feeds primarily on horseshoe crab eggs during its stopover. That bird is under a status review for listing under the Endangered Species Act.

In 1998, the Atlantic States Marine Fisheries Commission (ASMFC), a management organization with representatives from each State on the Atlantic Coast, developed a horseshoe crab management plan. The ASMFC plan and its subsequent addenda established mandatory State-by-State harvest quotas, and created the 1,500 square mile Carl N. Shuster, Jr. Horseshoe Crab Sanctuary off the mouth of Delaware Bay.

Although restrictive measures have been taken in recent years, populations are not showing immediate increases. Because horseshoe crabs do not breed until they are 9 years or older, it may take some time before the population measurably increases. Federal and State agencies, universities, and biomedical companies participate in a Horseshoe Crab Cooperative Tagging Program. The Maryland Fishery Resources Office, Fish and Wildlife Service, maintains the information that we collect under this program and uses it to evaluate migratory patterns, survival, and abundance of horseshoe crabs.

Agencies that tag and release the crabs complete FWS Form 3-2311 (Horseshoe Crab Tagging) and provide the Service with:

(1) Organization name.
(2) Contact person name.
(3) Tag number.
(4) Sex of crab.
(5) Prosomal width.
(6) Capture site, latitude, longitude, waterbody, State, and date.

Members of the public who recover tagged crabs provide the following information using FWS Form 3-2310 (Horseshoe Crab Recapture Report):

(1) Tag number.
(2) Whether or not tag was removed.
(3) Whether or not the tag was circular or square.
(4) Condition of crab.
(5) Date captured/found.
(6) Crab fate.
(7) Finder type.
(8) Capture method.
(9) Capture location.
(10) Reporter information.
(11) Comments.

If the public participant who reports the tagged crab requests information, we send data pertaining to the tagging program and tag and release information on the horseshoe crab he/she found or captured.

Comments: On June 24, 2008, we published in the **Federal Register** (73 FR 35705) a notice of our intent to request that OMB renew this ICR. In that notice, we solicited comments for 60 days, ending on August 25, 2008. We received one comment. The commenter did not address the necessity, clarity, or accuracy of the information collection,

but did oppose the use of horseshoe crabs by biomedical companies and proposed a ban on the use of horseshoe crabs for any purpose. We have not made any changes to our information collection as a result of the comment.

We again invite comments concerning this information collection on:

(1) Whether or not the collection of information is necessary, including whether or not the information will have practical utility;

(2) The accuracy of our estimate of the burden for this collection of information;

(3) Ways to enhance the quality, utility, and clarity of the information to be collected; and

(4) Ways to minimize the burden of the collection of information on respondents.

Comments that you submit in response to this notice are a matter of public record. Before including your address, phone number, e-mail address, or other personal identifying information in your comment, you should be aware that your entire comment, including your personal identifying information, may be made publicly available at any time. While you can ask OMB in your comment to withhold your personal identifying information from public review, we cannot guarantee that it will be done.

Dated: November 18, 2008

Hope Grey,

Information Collection Clearance Officer, Fish and Wildlife Service.

FR Doc. E8–29139 Filed 12–9–08; 08:45 am

BILLING CODE 4310–55–S

DEPARTMENT OF THE INTERIOR

Fish and Wildlife Service

[FWS-R9-MB-2008-N0325] [91200-1231-00AP-M4]

Information Collection Sent to the Office of Management and Budget (OMB) for Approval; OMB Control Number 1018-0019; North American Woodcock Singing Ground Survey

AGENCY: Fish and Wildlife Service, Interior.

ACTION: Notice; request for comments.

SUMMARY: We (Fish and Wildlife Service) have sent an Information Collection Request (ICR) to OMB for review and approval. The ICR, which is summarized below, describes the nature of the collection and the estimated burden and cost. This ICR is scheduled to expire on December 31, 2008. We may not conduct or sponsor and a person is not required to respond to a collection of information unless it displays a currently valid OMB control number. However, under OMB regulations, we may continue to conduct or sponsor this information collection while it is pending at OMB.

DATES: You must send comments on or before January 9, 2009.

ADDRESSES: Send your comments and suggestions on this ICR to the Desk Officer for the Department of the Interior at OMB-OIRA at (202) 395-6566 (fax) or OIRA_DOCKET@OMB.eop.gov (e-mail). Please provide a copy of your comments to Hope Grey, Information Collection Clearance Officer, Fish and Wildlife Service, MS 222-ARLSQ, 4401 North Fairfax Drive, Arlington, VA 22203 (mail) or hope_grey@fws.gov (e-mail).

FOR FURTHER INFORMATION CONTACT: To request additional information about this ICR, contact Hope Grey by mail or e-mail (see ADDRESSES) or by telephone at (703) 358–2482.

SUPPLEMENTARY INFORMATION: *OMB Control Number:* 1018-0019.

Title: North American Woodcock Singing Ground Survey.

Service Form Number(s): 3-156.

Type of Request: Extension of currently approved collection.

Affected Public: State, Provincial, local, and tribal employees.

Respondent's Obligation: Voluntary.

Frequency of Collection: Annually.

Estimated Annual Number of Responses: 680.

Estimated Total Annual Burden Hours: 1,206 hours. We believe 544 persons (80 percent of the respondents) will enter data electronically, with an average reporting burden of 1.8 hours per respondent. For all other respondents, we estimate the reporting burden to be 1.67 hours per respondent.

Abstract: The Migratory Bird Treaty Act (16 U.S.C. 703-712) and Fish and Wildlife Act of 1956 (16 U.S.C. 742a - 754j-2) designate the Department of the Interior as the primary agency responsible for:

(1) Wise management of migratory bird populations frequenting the United States, and

(2) Setting hunting regulations that allow for the well-being of migratory bird populations.

These responsibilities dictate that we gather accurate data on various characteristics of migratory bird populations.

The North American Woodcock Singing Ground Survey is an essential part of the migratory bird management program. State, Federal, Provincial, local, and tribal conservation agencies conduct the survey annually to provide the data necessary to determine the population status of the woodcock. In addition, the information is vital in assessing the relative changes in the geographic distribution of the woodcock. We use the information primarily to develop recommendations for hunting regulations. Without information on the population's status, we might promulgate hunting regulations that (1) are not sufficiently restrictive, which could cause harm to the woodcock population, or (2) are too restrictive, which would unduly restrict recreational opportunities afforded by woodcock hunting. The Service, State conservation agencies, university associates, and other interested parties use the data for various research and management projects.

Comments: On July 24, 2008, we published in the **Federal Register** (73 FR 43254) a notice of our intent to request that OMB renew this ICR. In that notice, we solicited comments for 60 days, ending on September 22, 2008. We received one comment. The commenter expressed opposition to hunting and to the Government, but did not address the information collection requirements. We did not make any changes to our information collection requirements.

We again invite comments concerning this information collection on:

(1) Whether or not the collection of information is necessary, including whether or not the information will have practical utility;

(2) The accuracy of our estimate of the burden for this collection of information;

(3) Ways to enhance the quality, utility, and clarity of the information to be collected; and

(4) Ways to minimize the burden of the collection of information on respondents.

Comments that you submit in response to this notice are a matter of public record. Before including your address, phone number, e-mail address, or other personal identifying information in your comment, you should be aware that your entire comment, including your personal identifying information, may be made publicly available at any time. While you can ask OMB in your comment to withhold your personal identifying information from public review, we cannot guarantee that it will be done.

Dated: November 26, 2008

Hope Grey,

Information Collection Clearance Officer, Fish and Wildlife Service.

FR Doc. E8–29140 Filed 12–9–08; 8:45 am

BILLING CODE 4310–55–S

DEPARTMENT OF THE INTERIOR

Fish and Wildlife Service

[FWS-R9-MB-2008-N0324] [91200-1231-00AP-M4]

Information Collection Sent to the Office of Management and Budget (OMB) for Approval; OMB Control Number 1018-0010; Mourning Dove Call Count Survey

AGENCY: Fish and Wildlife Service, Interior.

ACTION: Notice; request for comments.

SUMMARY: We (Fish and Wildlife Service) have sent an Information Collection Request (ICR) to OMB for review and approval. The ICR, which is summarized below, describes the nature of the collection and the estimated burden and cost. This ICR is scheduled to expire on December 31, 2008. We may not conduct or sponsor and a person is not required to respond to a collection of information unless it displays a currently valid OMB control number. However, under OMB regulations, we may continue to conduct or sponsor this information collection while it is pending at OMB.

DATES: You must send comments on or before January 9, 2009.

ADDRESSES: Send your comments and suggestions on this ICR to the Desk Officer for the Department of the Interior at OMB-OIRA at (202) 395-6566 (fax) or OIRA_DOCKET@OMB.eop.gov (e-mail). Please provide a copy of your comments to Hope Grey, Information Collection Clearance Officer, Fish and Wildlife Service, MS 222-ARLSQ, 4401 North Fairfax Drive, Arlington, VA 22203 (mail) or hope_grey@fws.gov (e-mail).

FOR FURTHER INFORMATION CONTACT: To request additional information about this ICR, contact Hope Grey by mail or e-mail (see ADDRESSES) or by telephone at (703) 358–2482.

SUPPLEMENTARY INFORMATION:

OMB Control Number: 1018-0010.

Title: Mourning Dove Call Count Survey.

Service Form Number(s): 3-159.

Type of Request: Extension of currently approved collection.

Affected Public: State, local, and tribal employees.

Respondent's Obligation: Voluntary.

Frequency of Collection: Annually.

Estimated Annual Number of Responses: 912.

Estimated Total Annual Burden Hours: 3,314 hours. We believe 80 percent of the respondents will enter data electronically, with an average reporting burden of 3 hours and 40 minutes per respondent. For all others, we estimate the reporting burden to be 3.5 hours per respondent.

Abstract: The Migratory Bird Treaty Act (16 U.S.C. 703-712) and Fish and Wildlife Act of 1956 (16 U.S.C. 742a - 754j-2) designate the Department of the Interior as the primary agency responsible for:

(1) Wise management of migratory bird populations frequenting the United States, and

(2) Setting hunting regulations that allow for the well-being of migratory bird populations.

These responsibilities dictate that we gather accurate data on various characteristics of migratory bird populations.

The Mourning Dove Call Count Survey is an essential part of the migratory bird management program. The survey is a cooperative effort between the Service and State wildlife agencies and local and tribal biologists. Each spring, State, Service, local, and tribal biologists conduct the survey to provide the necessary data to determine the population status of the mourning dove. If this survey were not conducted, we would not be able to properly determine the population status of mourning doves prior to setting regulations. The Service and the States use the survey results to:

(1) Develop annual regulations for hunting mourning doves,

(2) Plan and evaluate dove management programs, and

(3) Provide specific information necessary for dove research.

Comments: On July 24, 2008, we published in the **Federal Register** (73 FR 43254) a notice of our intent to request that OMB renew this ICR. In that notice, we solicited comments for 60 days, ending on September 22, 2008. We received one comment. The commenter expressed opposition to hunting and to the Government, but did not address the information collection requirements. We did not make any changes to our information collection requirements.

We again invite comments concerning this information collection on:

(1) Whether or not the collection of information is necessary, including whether or not the information will have practical utility;

(2) The accuracy of our estimate of the burden for this collection of information;

(3) Ways to enhance the quality, utility, and clarity of the information to be collected; and

(4) Ways to minimize the burden of the collection of information on respondents.

Comments that you submit in response to this notice are a matter of public record. Before including your address, phone number, e-mail address, or other personal identifying information in your comment, you should be aware that your entire comment, including your personal identifying information, may be made publicly available at any time. While you can ask OMB in your comment to withhold your personal identifying information from public review, we cannot guarantee that it will be done.

Dated: November 26, 2008

Hope Grey,

Information Collection Clearance Officer, Fish and Wildlife Service.

FR Doc. E8–29141 Filed 12–9–08; 08:45 am

BILLING CODE 4310–55–S

DEPARTMENT OF THE INTERIOR

Fish and Wildlife Service

[FWS–R9–IA–2008–N0304; 96300–1671–0000–P5]

Issuance of Permits

AGENCY: Fish and Wildlife Service, Interior.

ACTION: Notice of issuance of permits for endangered species and marine mammals.

SUMMARY: The following permits were issued.

ADDRESSES: Documents and other information submitted with these applications are available for review, subject to the requirements of the Privacy Act and Freedom of Information Act, by any party who submits a written request for a copy of such documents to: U.S. Fish and Wildlife Service, Division of Management Authority, 4401 North Fairfax Drive, Room 212, Arlington, Virginia 22203; fax 703/358–2281.

FOR FURTHER INFORMATION CONTACT: Division of Management Authority, telephone 703/358–2104.

SUPPLEMENTARY INFORMATION: Notice is hereby given that on the dates below, as authorized by the provisions of the Endangered Species Act of 1973, as amended (16 U.S.C. 1531 *et seq.*), and/or the Marine Mammal Protection Act of 1972, as amended (16 U.S.C. 1361 *et seq.*), the Fish and Wildlife Service issued the requested permits subject to certain conditions set forth therein. For each permit for an endangered species, the Service found that (1) the application was filed in good faith, (2) the granted permit would not operate to the disadvantage of the endangered species, and (3) the granted permit

would be consistent with the purposes and policy set forth in Section 2 of the Endangered Species Act of 1973, as amended.

Endangered Species

Permit No.	Applicant	Receipt of application **Federal Register** notice	Permit issuance date
184718	Delaware Museum of Natural History	73 FR 47207; August 13, 2008	September 26, 2008.

Endangered Marine Mammals and Marine Mammals

Permit No.	Applicant	Receipt of application **Federal Register** notice	Permit issuance date
183345	Michael A. Wharton, Wharton Media	73 FR 35706; June 24, 2008	October 7, 2008.
672624	U.S. Geological Survey—Western Ecological Research Center.	73 FR 18808; April 7, 2008	October 31, 2008.
187053	ABR, Inc—Environmental Research & Services	73 FR 42593; July 22, 2008	November 4, 2008.

Dated: November 7, 2008.

Lisa J. Lierheimer,

Senior Permit Biologist, Branch of Permits, Division of Management Authority.

[FR Doc. E8–29191 Filed 12–9–08; 8:45 am]

BILLING CODE 4310–55–P

DEPARTMENT OF THE INTERIOR

Fish and Wildlife Service

[FWS–R9–MB–2008–N0302; 91100–3740–GRNT 7C]

Meeting Announcement: North American Wetlands Conservation Council

AGENCY: Fish and Wildlife Service, Interior.

ACTION: Notice of meeting.

SUMMARY: The North American Wetlands Conservation Council (Council) will meet to select North American Wetlands Conservation Act (NAWCA) grant proposals for recommendation to the Migratory Bird Conservation Commission (Commission). This meeting is open to the public, and interested persons may present oral or written statements.

DATES: *Council Meeting:* December 9, 2008, 1–3 p.m.

ADDRESSES: The meeting will be held at the Ballston Station Building, 4301 North Fairfax Drive, Arlington, VA 22203. (The meeting room is on the west side of building; use the entrance on North Utah Street.)

FOR FURTHER INFORMATION CONTACT: Mike Johnson, Council Coordinator, by phone at (703) 358–1784; by e-mail at *dbhc@fws.gov*; or by U.S. mail at U.S. Fish and Wildlife Service, 4401 N. Fairfax Drive, Mail Stop MBSP 4501–4075, Arlington, VA 22203.

SUPPLEMENTARY INFORMATION: In accordance with NAWCA (Pub. L. 101–233, 103 Stat. 1968, December 13, 1989, as amended), the State-private-Federal Council meets to consider wetland acquisition, restoration, enhancement, and management projects for recommendation to, and final funding approval by, the Commission.

If you are interested in presenting information at the public meeting, contact the Council Coordinator no later than December 8, 2008.

Project proposal due dates, application instructions, and eligibility requirements are available on the NAWCA Web site at *http://www.fws.gov/birdhabitat/Grants/NAWCA/Standard/US/Overview.shtm*. Proposals require a minimum of 50 percent non-Federal matching funds. The Council will consider U.S. Standard and Mexican grant proposals at the December meeting. The tentative date for the Commission meeting is March 11, 2009.

Dated: November 14, 2008.

Paul Schmidt,

Assistant Director—Migratory Birds.

[FR Doc. E8–29214 Filed 12–9–08; 8:45 am]

BILLING CODE 4310–55–P

DEPARTMENT OF THE INTERIOR

Fish and Wildlife Service

[FWS–R9–IA–2008–N0305; 96300–1671–0000–P5]

Receipt of Applications for Permit

AGENCY: Fish and Wildlife Service, Interior.

ACTION: Notice of receipt of applications for permit.

SUMMARY: The public is invited to comment on the following applications to conduct certain activities with endangered species and marine mammals.

DATES: Written data, comments or requests must be received by January 9, 2009.

ADDRESSES: Documents and other information submitted with these applications are available for review, subject to the requirements of the Privacy Act and Freedom of Information Act, by any party who submits a written request for a copy of such documents within 30 days of the date of publication of this notice to: U.S. Fish and Wildlife Service, Division of Management Authority, 4401 North Fairfax Drive, Room 212, Arlington, Virginia 22203; fax 703/358–2281.

FOR FURTHER INFORMATION CONTACT: Division of Management Authority, telephone 703/358–2104.

SUPPLEMENTARY INFORMATION:

Endangered Species

The public is invited to comment on the following applications for a permit to conduct certain activities with endangered species. This notice is provided pursuant to Section 10(c) of the Endangered Species Act of 1973, as amended (16 U.S.C. 1531 *et seq.*). Written data, comments, or requests for copies of these complete applications should be submitted to the Director (address above).

Applicant: Saint Louis Zoo, St. Louis, MO, PRT–197642.

The applicant requests a permit to import one captive bred female Somali wild ass (*Equus asinus somalicus*) from Werner Stamm-Stiftung zur Erhaltung seltener Einhufer, Oberwil, Switzerland, for the purpose of enhancement of the survival of the species.

Applicant: William W. Pickett, Houston, TX, PRT–195929.

The applicant requests a permit to import the sport-hunted trophy of one male bontebok (*Damaliscus pygargus pygargus*) culled from a captive herd maintained under the management

program of the Republic of South Africa, for the purpose of enhancement of the survival of the species.

Applicant: Larry G. Evenson, Reno, NV, PRT–198190.

The applicant requests a permit to import the sport-hunted trophy of one male bontebok (*Damaliscus pygargus pygargus*) culled from a captive herd maintained under the management program of the Republic of South Africa, for the purpose of enhancement of the survival of the species.

Applicant: Bill D. Williams, Juntura, OR, PRT–194018.

The applicant requests a permit to import the sport-hunted trophy of one male bontebok (*Damaliscus pygargus pygargus*) culled from a captive herd maintained under the management program of the Republic of South Africa, for the purpose of enhancement of the survival of the species.

Endangered Marine Mammals

The public is invited to comment on the following application for a permit to conduct certain activities with endangered marine mammals. The application was submitted to satisfy requirements of the Endangered Species Act of 1973, as amended (16 U.S.C. 1531 *et seq.*) and the Marine Mammal Protection Act of 1972, as amended (16 U.S.C. 1361 *et seq.*), and the regulations governing endangered species (50 CFR Part 17) and marine mammals (50 CFR Part 18). Written data, comments, or requests for copies of the complete applications or requests for a public hearing on these applications should be submitted to the Director (address above). Anyone requesting a hearing should give specific reasons why a hearing would be appropriate. The holding of such a hearing is at the discretion of the Director.

Applicant: Charles Grossman, Xavier University, Cincinnati, OH, PRT–049136.

The applicant requests renewal of his permit to conduct auditory response research with captive held manatees (*Trichechus manatus*) for the purpose of scientific research. This notification covers activities to be conducted by the applicant over a five-year period.

Concurrent with the publication of this notice in the **Federal Register**, the Division of Management Authority is forwarding a copy of the above application to the Marine Mammal Commission and the Committee of Scientific Advisors for their review.

Dated: November 7, 2008.

Lisa J. Lierheimer,

Senior Permit Biologist, Branch of Permits, Division of Management Authority.

[FR Doc. E8–29194 Filed 12–9–08; 8:45 am]

BILLING CODE 4310–55–P

DEPARTMENT OF THE INTERIOR

Fish and Wildlife Service

[FWS–R9–IA–2008–N0320; 96300–1671–0000–P5]

Receipt of Applications for Permit

AGENCY: Fish and Wildlife Service, Interior.

ACTION: Notice of receipt of applications for permit.

SUMMARY: The public is invited to comment on the following applications to conduct certain activities with endangered species and/or marine mammals.

DATES: Written data, comments or requests must be received by January 9, 2009.

ADDRESSES: Documents and other information submitted with these applications are available for review, subject to the requirements of the Privacy Act and Freedom of Information Act, by any party who submits a written request for a copy of such documents within 30 days of the date of publication of this notice to: U.S. Fish and Wildlife Service, Division of Management Authority, 4401 North Fairfax Drive, Room 212, Arlington, Virginia 22203; fax 703/358–2281.

FOR FURTHER INFORMATION CONTACT: Division of Management Authority, telephone 703/358–2104.

SUPPLEMENTARY INFORMATION:

Endangered Species

The public is invited to comment on the following applications for a permit to conduct certain activities with endangered species. This notice is provided pursuant to Section 10(c) of the Endangered Species Act of 1973, as amended (16 U.S.C. 1531 *et seq.*). Written data, comments, or requests for copies of these complete applications should be submitted to the Director (address above).

Applicant: Dr. Ajit Varki, Department of Cellular and Molecular Medicine, University of California, San Diego, CA, PRT–196889

The applicant requests a permit to acquire from Coriell Institute, Camden, NJ, in interstate commerce DNA and/or cell lines from gorilla (*Gorilla gorilla*), Bornean orangutan (*Pongo pygmaeus* and *P.Q p. pygmaeus*) and Sumatran orangutan (*P. abelii*) for the purpose of scientific research. This notification covers activities to be conducted by the applicant over a one-year period.

Applicant: Larry E. Johnson (dba Safari Enterprises), Boerne, TX, PRT–157476

The applicant requests a permit to export 4 captive bred Cuvier's gazelle (*Gazella cuvieri*) to the Endangered Wildlife Conservation and Breeding Center, Al Ain, United Arab Emirates for the purpose of enhancement of the survival of the species.

Applicant: Hans R. Van Riel, North Las Vegas, NV, PRT–199024

The applicant requests a permit to import the sport-hunted trophy of one male bontebok (*Damaliscus pygargus pygargus*) culled from a captive herd maintained under the management program of the Republic of South Africa, for the purpose of enhancement of the survival of the species.

Applicant: Gary D. Steele, Scottsdale, AZ, PRT–198827

The applicant requests a permit to import the sport-hunted trophy of one male bontebok (*Damaliscus pygargus pygargus*) culled from a captive herd maintained under the management program of the Republic of South Africa, for the purpose of enhancement of the survival of the species.

Applicant: Alexander T. Barclay, III, San Antonio, TX, PRT–199513

The applicant requests a permit to import the sport-hunted trophy of one male bontebok (*Damaliscus pygargus pygargus*) culled from a captive herd maintained under the management program of the Republic of South Africa, for the purpose of enhancement of the survival of the species.

Applicant: James W. Anderson, Centerville, GA, PRT–199530

The applicant requests a permit to import the sport-hunted trophy of one male bontebok (*Damaliscus pygargus pygargus*) culled from a captive herd maintained under the management program of the Republic of South Africa, for the purpose of enhancement of the survival of the species.

Marine Mammals

The public is invited to comment on the following application for a permit to conduct certain activities with endangered marine mammals and/or marine mammals. The application was submitted to satisfy requirements of the Endangered Species Act of 1973, as amended (16 U.S.C. 1531 *et seq.*) and/or the Marine Mammal Protection Act of 1972, as amended (16 U.S.C. 1361 *et seq.*), and the regulations governing endangered species (50 CFR Part 17)

and/or marine mammals (50 CFR Part 18). Written data, comments, or requests for copies of the complete applications or requests for a public hearing on these applications should be submitted to the Director (address above). Anyone requesting a hearing should give specific reasons why a hearing would be appropriate. The holding of such a hearing is at the discretion of the Director.

Applicant: USGS National Wildlife Health Center, Madison, WI, PRT–195274

The applicant requests a permit to acquire carcasses and tissue samples of northern sea otter (*Enhydra lutris kenyoni*) from coastal Washington and Alaska and export frozen tissue samples to Fisheries and Oceans Canada laboratory in Winnipeg, Manitoba, Canada for the purpose of scientific research on the presence of infectious virus in the tissues of these sea otters. This notification covers activities to be conducted by the applicant over a five-year period.

Concurrent with the publication of this notice in the **Federal Register**, the Division of Management Authority is forwarding copies of the above applications to the Marine Mammal Commission and the Committee of Scientific Advisors for their review.

Dated: November 21, 2008.

Lisa J. Lierheimer,

Senior Permit Biologist, Branch of Permits, Division of Management Authority.

[FR Doc. E8–29196 Filed 12–9–08; 8:45 am]

BILLING CODE 4310–55–P

DEPARTMENT OF THE INTERIOR

Bureau of Land Management

[WY–920–1320–EL, WYW154432]

Notice of Competitive Coal Lease Sale, Wyoming

AGENCY: Bureau of Land Management, Interior.

ACTION: Notice of competitive coal lease sale.

SUMMARY: Notice is hereby given that certain coal resources in the North Maysdorf Coal Tract described below in Campbell County, Wyoming, will be reoffered for competitive lease by sealed bid in accordance with the provisions of the Mineral Leasing Act of 1920, as amended (30 U.S.C. 181 *et seq.*).

DATES: The lease sale reoffer will be held at 10 a.m., on Thursday, January 29, 2009. Sealed bids must be submitted on or before 4 p.m., on Wednesday, January 28, 2009.

ADDRESSES: The lease sale reoffer will be held in the First Floor Conference Room (Room 107), of the Bureau of Land Management (BLM) Wyoming State Office, 5353 Yellowstone Road, P.O. Box 1828, Cheyenne, WY 82003. Sealed bids must be submitted to the Cashier, BLM Wyoming State Office, at the address given above.

FOR FURTHER INFORMATION CONTACT: Mavis Love, Land Law Examiner, or Robert Janssen, Coal Coordinator, at 307–775–6258, and 307–775–6206, respectively.

SUPPLEMENTARY INFORMATION: This coal lease sale is being held in response to a lease by application (LBA) filed by Cordero Mining Company, Gillette, Wyoming. The North Maysdorf Tract was previously offered on October 18, 2007, and March 19, 2008, and the one bid received at each of those two sales was rejected because it did not meet the BLM's estimate of fair market value. The coal resource to be offered consists of all reserves recoverable by surface mining methods in the following-described lands located in central Campbell County, approximately 2 miles east of State Highway 59, 4 miles south of Bishop Road, and is adjacent to the southern lease boundary of the Belle Ayr Mine and the northwest lease boundary of the Cordero Rojo Mine:

T. 47 N., R. 71 W., 6th P.M., Wyoming
Section 7: Lots 5, 12, 13, 20;
Section 8: Lots 3 through 6, 11 through 13.

Containing 445.89 acres more or less.

The tract is adjacent to Federal coal leases to the north and east held by the Belle Ayr and Cordero Rojo Mines, respectively. It is adjacent to additional unleased Federal coal to the west and south. It is also adjacent to about 40 acres of private coal controlled by the Cordero Rojo Mine. All of the acreage offered has been determined to be suitable for mining. Features such as pipelines can be moved to permit coal recovery. In addition, oil and/or gas wells have been drilled on the tract. The estimate of the bonus value of the coal lease will include consideration of any future production from these wells. An economic analysis of this future income stream will determine whether a well is bought out and plugged prior to mining or re-established after mining is completed. The surface estate of the tract is owned by Cordero Minining Company, Caballo Rojo, Inc. and Foundation Wyoming Land Company.

The tract contains surface mineable coal reserves in the Wyodak seam currently being recovered in the adjacent, existing mine. On the LBA tract, the Wyodak seam is generally a single seam averaging approximately 70 feet thick. The overburden depths range from 170–360 feet thick on the LBA.

The tract contains an estimated 54,657,000 tons of mineable coal. This estimate of mineable reserves includes the main Wyodak seam but does not include any tonnage from localized seams or splits containing less than 5 feet of coal. It does not include the adjacent private coal although these reserves are expected to be recovered in conjunction with the LBA. The total mineable stripping ratio (BCY/Ton) of the coal is about 3.7:1. Potential bidders for the LBA should consider the recovery rate expected from thick seam mining.

The North Maysdorf LBA coal is ranked as subbituminous C. The overall average quality on an as-received basis is 8586 BTU/lb with about 0.27% sulfur. These quality averages place the coal reserves near the middle of the range of coal quality currently being mined in the Wyoming portion of the Powder River Basin.

The tract will be leased to the qualified bidder of the highest cash amount provided that the high bid meets or exceeds the BLM's estimate of the fair market value of the tract. The minimum bid for the tract is $100 per acre or fraction thereof. No bid that is less than $100 per acre, or fraction thereof, will be considered. The bids should be sent by certified mail, return receipt requested, or be hand delivered. The Cashier will issue a receipt for each hand-delivered bid. Bids received after 4 p.m., on Wednesday, January 28, 2009, will not be considered. The minimum bid is not intended to represent fair market value. The fair market value of the tract will be determined by the Authorized Officer after the sale. The lease issued as a result of this offering will provide for payment of an annual rental of $3.00 per acre, or fraction thereof, and a royalty payment to the United States of 12.5 percent of the value of coal produced by strip or auger mining methods and 8 percent of the value of the coal produced by underground mining methods. The value of the coal will be determined in accordance with 30 CFR 206.250.

Bidding instructions for the tract offered and the terms and conditions of the proposed coal lease are available from the BLM Wyoming State Office at the addresses above. Case file documents, WYW154432, are available for inspection at the BLM Wyoming State Office.

Dated: November 25, 2008.

Larry Claypool,

Deputy State Director, Minerals and Lands.

[FR Doc. E8–28628 Filed 12–9–08; 8:45 am]

BILLING CODE 4310–22–P

INTERNATIONAL TRADE COMMISSION

[Inv. No. 337–TA–661]

In the Matter of Certain Semiconductor Chips Having Synchronous Dynamic Random Access Memory Controllers and Products Containing Same: Notice of Investigation

AGENCY: U.S. International Trade Commission.

ACTION: Institution of investigation pursuant to 19 U.S.C. 1337.

SUMMARY: Notice is hereby given that a complaint was filed with the U.S. International Trade Commission on November 6, 2008, under section 337 of the Tariff Act of 1930, as amended, 19 U.S.C. 1337, on behalf of Rambus Inc. of Los Altos, California. A letter supplementing the complaint was filed on November 21, 2008. The complaint alleges violations of section 337 based upon the importation into the United States, the sale for importation, and the sale within the United States after importation of certain semiconductor chips having synchronous dynamic random access memory controllers and products containing same, including graphics cards and motherboards, that infringe certain claims of U.S. Patent Nos. 7,177,998; 7,210,016; 6,470,405; 6,591,353; 7,287,109; 7,287,119; 7,330,952; 7,330,953; and 7,360,050. The complaint further alleges that an industry in the United States exists as required by subsection (a)(2) of section 337.

The complainant requests that the Commission institute an investigation and, after the investigation, issue a general exclusion order and a cease and desist order.

ADDRESSES: The complaint, except for any confidential information contained therein, is available for inspection during official business hours (8:45 a.m. to 5:15 p.m.) in the Office of the Secretary, U.S. International Trade Commission, 500 E Street, SW., Room 112, Washington, DC 20436, telephone 202–205–2000. Hearing impaired individuals are advised that information on this matter can be obtained by contacting the Commission's TDD terminal on 202–205–1810. Persons with mobility impairments who will need special assistance in gaining access to the Commission should contact the Office of the Secretary at 202–205–2000. General information concerning the Commission may also be obtained by accessing its Internet server at *http://www.usitc.gov*. The public record for this investigation may be viewed on the Commission's electronic docket (EDIS) at *http://edis.usitc.gov*.

FOR FURTHER INFORMATION CONTACT: Vu Q. Bui, Esq., Office of Unfair Import Investigations, U.S. International Trade Commission, telephone (202) 205–2582.

Authority: The authority for institution of this investigation is contained in section 337 of the Tariff Act of 1930, as amended, and in section 210.10 of the Commission's Rules of Practice and Procedure, 19 CFR 210.10 (2008).

Scope of Investigation: Having considered the complaint, the U.S. International Trade Commission, on December 4, 2008, *Ordered that*—

(1) Pursuant to subsection (b) of section 337 of the Tariff Act of 1930, as amended, an investigation be instituted to determine whether there is a violation of subsection (a)(1)(B) of section 337 in the importation into the United States, the sale for importation, or the sale within the United States after importation of certain semiconductor chips having synchronous dynamic random access memory controllers or products containing same that infringe one or more of claims 7, 13, 21, and 22 of U.S. Patent No. 7,177,998; claims 7, 13, 21, and 22 of U.S. Patent No. 7,210,016; claims 11–13, 15, and 18 of U.S. Patent No. 6,470,405; claims 11–13 of U.S. Patent No. 6,591,353; claims 1–6, 11–13, 20–22, and 24 of U.S. Patent No. 7,287,109; claims 21 and 22 of U.S. Patent No. 7,287,119; claims 21, 22, and 24 of U.S. Patent No. 7,330,952; claim 25 of U.S. Patent No. 7,330,953; and claims 29 and 31 of U.S. Patent No. 7,360,050, and whether an industry in the United States exists as required by subsection (a)(2) of section 337;

(2) For the purpose of the investigation so instituted, the following are hereby named as parties upon which this notice of investigation shall be served:

(a) The complainant is—

Rambus Inc., 4440 El Camino Real, Los Altos, California 94022.

(b) The respondents are the following entities alleged to be in violation of section 337, and are the parties upon which the complaint is to be served:

NVIDIA Corporation, 2701 San Tomas Expressway, Santa Clara, California 95050;

Asustek Computer Inc., 4F, No. 15, Li Te Rd., Peitou District, Taipei 112, Taiwan;

ASUS Computer International, Inc., 800 Corporate Way, Fremont, California 94539;

BFG Technologies, Inc., 28690 Ballard Drive, Lake Forest, Illinois 60045;

Biostar Microtech (U.S.A.) Corp., 18551 East Gale Avenue, City of Industry, California 91748;

Biostar Microtech International Corp., 2 Fl., 108–2 Ming Chuan Road, Hsin Tien, Taiwan;

Diablotek Inc., 1421 Pedley Drive, Alhambra, California 91803;

EVGA Corp., 2900 Saturn Street, Suite B, Brea, California 92821;

G.B.T. Inc., 17358 Railroad St., City of Industry, California 91748;

Giga-byte Technology Co., Ltd., No. 6, Bau Chiang Road, Hsin-Tien, Taipei 231, Taiwan;

Hewlett-Packard Co., 3000 Hanover Street, Palo Alto, California 94304;

MSI Computer Corp., 901 Canada Court, City of Industry, California 91748;

Micro-star International Co., Ltd., No. 69, Li-De St., Jung-He City, Taipei Hsien, Taiwan;

Palit Multimedia Inc., 1920 O'Toole Way, San Jose, California 95131;

Palit Microsystems Ltd., 21F, 88, Sec. 2, Chung Hsiao E. Rd., Taipei, Taiwan;

Pine Technology Holdings, Ltd. Units 5507–10 Hopewell Centre, 183 Queen's Road East, Hong Kong;

Sparkle Computer Co., Ltd., 13F, No. 2, Sec. 1 Fu Hsing S. Rd., Taipei, Taiwan.

(c) The Commission investigative attorney, party to this investigation, is Vu Q. Bui, Esq., Office of Unfair Import Investigations, U.S. International Trade Commission, 500 E Street, SW., Suite 401, Washington, DC 20436; and

(3) For the investigation so instituted, Paul J. Luckern, Chief Administrative Law Judge, U.S. International Trade Commission, shall designate the presiding Administrative Law Judge.

Responses to the complaint and the notice of investigation must be submitted by the named respondents in accordance with section 210.13 of the Commission's Rules of Practice and Procedure, 19 CFR 210.13. Pursuant to 19 CFR 201.16(d) and 210.13(a), such responses will be considered by the Commission if received not later than 20 days after the date of service by the Commission of the complaint and the notice of investigation. Extensions of time for submitting responses to the complaint and the notice of investigation will not be granted unless good cause therefor is shown.

Failure of a respondent to file a timely response to each allegation in the complaint and in this notice may be deemed to constitute a waiver of the

right to appear and contest the allegations of the complaint and this notice, and to authorize the administrative law judge and the Commission, without further notice to the respondent, to find the facts to be as alleged in the complaint and this notice and to enter an initial determination and a final determination containing such findings, and may result in the issuance of an exclusion order or a cease and desist order or both directed against the respondent.

By order of the Commission.

Issued: December 4, 2008.

Marilyn R. Abbott,

Secretary to the Commission.

[FR Doc. E8–29162 Filed 12–9–08; 8:45 am]

BILLING CODE 7020–02–P

INTERNATIONAL TRADE COMMISSION

[Investigation Nos. 731–TA–1141–1142 (Final)]

Uncovered Innerspring Units From South Africa and Vietnam

Determination

On the basis of the record [1] developed in the subject investigations, the United States International Trade Commission (Commission) determines, pursuant to section 735(b) of the Tariff Act of 1930 (19 U.S.C. 1673d(b)) (the Act), that an industry in the United States is materially injured by reason of imports from South Africa and Vietnam of uncovered innerspring units, provided for in subheading 9404.29.90 of the Harmonized Tariff Schedule of the United States, that have been found by the Department of Commerce (Commerce) to be sold in the United States at less than fair value (LTFV).

Background

The Commission instituted these investigations effective December 31, 2007, following receipt of a petition filed with the Commission and Commerce by Leggett & Platt, Inc., Carthage, MO. The final phase of the investigations was scheduled by the Commission following notification of preliminary determinations by Commerce that imports of uncovered innerspring units from South Africa and Vietnam were being sold at LTFV within the meaning of section 733(b) of the Act (19 U.S.C. 1673b(b)). Notice of the scheduling of the final phase of the Commission's investigations and of a public hearing to be held in connection therewith was given by posting copies of the notice in the Office of the Secretary, U.S. International Trade Commission, Washington, DC, and by publishing the notice in the **Federal Register** of August 20, 2008 (73 FR 49219). The hearing was held in Washington, DC on October 22, 2008, and all persons who requested the opportunity were permitted to appear in person or by counsel.

The Commission transmitted its determination in this investigation to the Secretary of Commerce on December 4, 2008. The views of the Commission are contained in USITC Publication 4051 (December 2008), entitled *Uncovered Innerspring Units from South Africa and Vietnam: Investigation Nos. 731–TA–1141–1142 (Final).*

By order of the Commission.

Issued: December 4, 2008.

Marilyn R. Abbott,

Secretary to the Commission.

[FR Doc. E8–29161 Filed 12–9–08; 8:45 am]

BILLING CODE 7020–02–P

[1] The record is defined in sec. 207.2(f) of the Commission's Rules of Practice and Procedure (19 CFR 207.2(f)).

DEPARTMENT OF LABOR

Office of the Secretary

Submission for OMB Review: Comment Request

December 5, 2008.

The Department of Labor (DOL) hereby announces the submission of the following public information collection request (ICR) to the Office of Management and Budget (OMB) for review and approval in accordance with the Paperwork Reduction Act of 1995 (Pub. L. 104–13, 44 U.S.C. chapter 35). A copy of this ICR, with applicable supporting documentation; including among other things a description of the likely respondents, proposed frequency of response, and estimated total burden may be obtained from the *RegInfo.gov* Web site at *http://www.reginfo.gov/public/do/PRAMain* or by contacting Amy Hobby on 202–693–4553 (this is not a toll-free number) / e-mail: *DOL_PRA_PUBLIC@dol.gov*.

Interested parties are encouraged to send comments to the Office of Information and Regulatory Affairs, Attn: OMB Desk Officer for the Employment Standards Administration (ESA), Office of Management and Budget, Room 10235, Washington, DC 20503, Telephone: 202–395–7316 / Fax: 202–395–6974 (these are not toll-free numbers), E-mail: *OIRA_submission@omb.eop.gov* within 30 days from the date of this publication in the **Federal Register**. In order to ensure the appropriate consideration, comments should reference the OMB Control Number (see below).

The OMB is particularly interested in comments which:

- Evaluate whether the proposed collection of information is necessary for the proper performance of the functions of the agency, including whether the information will have practical utility;
- Evaluate the accuracy of the agency's estimate of the burden of the proposed collection of information, including the validity of the methodology and assumptions used;
- Enhance the quality, utility, and clarity of the information to be collected; and
- Minimize the burden of the collection of information on those who are to respond, including through the use of appropriate automated, electronic, mechanical, or other technological collection techniques or other forms of information technology, e.g., permitting electronic submission of responses.

Agency: Employment Standards Administration.

Type of Review: Extension without change of an existing OMB Control Number.

Title of Collection: Partial Overtime Exemption for Remedial Education.

OMB Control Number: 1215–0175.

Agency Form Number(s): None.

Affected Public: Private Sector: Businesses or other for-profits and Not-for-profit institutions.

Total Estimated Number of Respondents: 15,000.

Total Estimated Annual Burden Hours: 5,000.

Total Estimated Annual Costs Burden: $0.

Description: The recording requirements contained in the Department's regulations at 29 CFR 516.34 pertain to employers utilizing the partial overtime exemption for remedial education and are necessary to ensure employees are paid in compliance with the remedial education provisions of the Fair Labor Standards Act (29 U.S.C. 207(q)). For additional information, see related notice published at 73 FR 57152 on October 1, 2008.

Darrin A. King,

Departmental Clearance Officer.

[FR Doc. E8–29187 Filed 12–9–08; 8:45 am]

BILLING CODE 4510–CF–P

DEPARTMENT OF LABOR

Office of the Secretary

Submission for OMB Review: Comment Request

December 4, 2008.

The Department of Labor (DOL) hereby announces the submission of the following public information collection requests (ICR) to the Office of Management and Budget (OMB) for review and approval in accordance with the Paperwork Reduction Act of 1995 (Pub. L. 104–13, 44 U.S.C. chapter 35). A copy of each ICR, with applicable supporting documentation; including among other things a description of the likely respondents, proposed frequency of response, and estimated total burden may be obtained from the RegInfo.gov Web site at *http://www.reginfo.gov/public/do/PRAMain* or by contacting Darrin King on 202–693–4129 (this is not a toll-free number)/e-mail: *DOL_PRA_PUBLIC@dol.gov*.

Interested parties are encouraged to send comments to the Office of Information and Regulatory Affairs, Attn: OMB Desk Officer for the Bureau of Labor Statistics (BLS), Office of Management and Budget, Room 10235, Washington, DC 20503, Telephone: 202–395–7316/Fax: 202–395–6974 (these are not toll-free numbers), E-mail: *OIRA_submission@omb.eop.gov* within 30 days from the date of this publication in the **Federal Register**. In order to ensure the appropriate consideration, comments should reference the OMB Control Number (see below).

The OMB is particularly interested in comments which:

- Evaluate whether the proposed collection of information is necessary for the proper performance of the functions of the agency, including whether the information will have practical utility;
- Evaluate the accuracy of the agency's estimate of the burden of the proposed collection of information, including the validity of the methodology and assumptions used;
- Enhance the quality, utility, and clarity of the information to be collected; and
- Minimize the burden of the collection of information on those who are to respond, including through the use of appropriate automated, electronic, mechanical, or other technological collection techniques or other forms of information technology, e.g., permitting electronic submission of responses.

Agency: Bureau of Labor Statistics.

Type of Review: Extension without change of an existing OMB Control Number.

Title of Collection: Local Area Unemployment Statistics Program.

OMB Control Number: 1220–0017.

Affected Public: State, Local, and Tribal Governments.

Total Estimated Number of Respondents: 52.

Total Estimated Annual Burden Hours: 142,538.

Total Estimated Annual Costs Burden: $0.

Description: The Manual provides the theoretical basis and essential technical instructions and guidance which States require to prepare State and area labor force estimates, while the reports ensure and/or measure the timeliness, quality, consistency, and adherence to Local Area Unemployment Statistics (LAUS) program directives and research. For additional information, see related notice published at 73 FR 51532 on September 3, 2008.

Agency: Bureau of Labor Statistics.

Type of Review: Extension without change of an existing OMB Control Number.

Title of Collection: Mass Layoff Statistics Program.

OMB Control Number: 1220–0090.

Affected Public: Not-for-profit institutions; businesses or other for-profits; State, Local, and Tribal Governments.

Total Estimated Number of Respondents: 14,053.

Total Estimated Annual Burden Hours: 67,213.

Total Estimated Annual Costs Burden: $0.

Description: The information collected and compiled in the Mass Layoff Statistics (MLS) program is used to satisfy the legislatively required reporting mandated by Clause (iii) of Section 309(2)(15)(a)(1)(A) of the Workforce Investment Act which states that the Secretary of Labor shall oversee the development, maintenance, and continuous improvements of the incidence of, industrial and geographical location of, and number of workers displaced by, permanent layoffs and plant closings. For additional information, see related notice published at 73 FR 51317 on September 2, 2008.

Darrin A. King,

Departmental Clearance Officer.

[FR Doc. E8–29232 Filed 12–9–08; 8:45 am]

BILLING CODE 4510–24–P

DEPARTMENT OF LABOR

Employee Benefits Security Administration

Advisory Council on Employee Welfare and Pension Benefit Plans; Notice of Charter Renewal

In accordance with section 512(a)(1) of the Employee Retirement Income Security Act of 1974 (ERISA) and the provisions of the Federal Advisory Committee Act and its implementing regulations issued by the General Services Administration (GSA), the charter for the Advisory Council on Employee Welfare and Pension Benefit Plans is renewed.

The Advisory Council on Employee Welfare and Pension Benefit Plans shall advise the Secretary of Labor on technical aspects of the provisions of ERISA and shall provide reports and/or recommendations by November 14 of each year on its findings to the Secretary of Labor. The Council shall be composed of fifteen members appointed by the Secretary. Not more than eight members of the Council shall be of the same political party. Three of the members shall be representatives of employee organizations (at least one of whom shall be a representative of any organization members of which are participants in a multiemployer plan); three of the members shall be representatives of employers (at least one of whom shall be a representative of employers maintaining or contributing to multiemployer plans); three members shall be representatives appointed from the general public (one of whom shall be a person representing those receiving benefits from a pension plan); and there shall be one representative each from the fields of insurance, corporate trust, actuarial counseling, investment counseling, investment management, and accounting.

The Advisory Council will report to the Secretary of Labor. It will function solely as an advisory body and in compliance with the provisions of the Federal Advisory Committee Act, and its charter will be filed under the Act. For further information, contact Larry I. Good, Executive Secretary, Advisory Council on Employee Welfare and Pension Benefit Plans, U.S. Department of Labor, 200 Constitution Avenue, NW., Washington, DC 20210, telephone (202) 693–8668.

Signed at Washington, DC, this 4th day of December 2008.

Bradford P. Campbell,

Assistant Secretary, Employee Benefits Security Administration.

[FR Doc. E8–29193 Filed 12–9–08; 8:45 am]

BILLING CODE 4510–29–P

DEPARTMENT OF LABOR

Employment and Training Administration

Notice of Determinations Regarding Eligibility To Apply for Worker Adjustment Assistance and Alternative Trade Adjustment Assistance

In accordance with Section 223 of the Trade Act of 1974, as amended (19 U.S.C. 2273) the Department of Labor herein presents summaries of determinations regarding eligibility to apply for trade adjustment assistance for workers (TA–W) number and alternative trade adjustment assistance (ATAA) by (TA–W) number issued during the period of November 17 through November 21, 2008.

In order for an affirmative determination to be made for workers of a primary firm and a certification issued regarding eligibility to apply for worker adjustment assistance, each of the group eligibility requirements of Section 222(a) of the Act must be met.

I. Section (a)(2)(A) all of the following must be satisfied:

A. A significant number or proportion of the workers in such workers' firm, or an appropriate subdivision of the firm, have become totally or partially separated, or are threatened to become totally or partially separated;

B. The sales or production, or both, of such firm or subdivision have decreased absolutely; and

C. Increased imports of articles like or directly competitive with articles produced by such firm or subdivision have contributed importantly to such workers' separation or threat of separation and to the decline in sales or production of such firm or subdivision; or

II. Section (a)(2)(B) both of the following must be satisfied:

A. A significant number or proportion of the workers in such workers' firm, or an appropriate subdivision of the firm, have become totally or partially separated, or are threatened to become totally or partially separated;

B. There has been a shift in production by such workers' firm or subdivision to a foreign country of articles like or directly competitive with articles which are produced by such firm or subdivision; and

C. One of the following must be satisfied:

1. The country to which the workers' firm has shifted production of the articles is a party to a free trade agreement with the United States;

2. The country to which the workers' firm has shifted production of the articles to a beneficiary country under the Andean Trade Preference Act, African Growth and Opportunity Act, or the Caribbean Basin Economic Recovery Act; or

3. There has been or is likely to be an increase in imports of articles that are like or directly competitive with articles which are or were produced by such firm or subdivision.

Also, in order for an affirmative determination to be made for secondarily affected workers of a firm and a certification issued regarding eligibility to apply for worker adjustment assistance, each of the group eligibility requirements of Section 222(b) of the Act must be met.

(1) Significant number or proportion of the workers in the workers' firm or an appropriate subdivision of the firm have become totally or partially separated, or are threatened to become totally or partially separated;

(2) The workers' firm (or subdivision) is a supplier or downstream producer to a firm (or subdivision) that employed a group of workers who received a certification of eligibility to apply for trade adjustment assistance benefits and such supply or production is related to the article that was the basis for such certification; and

(3) Either—

(A) The workers' firm is a supplier and the component parts it supplied for the firm (or subdivision) described in paragraph (2) accounted for at least 20 percent of the production or sales of the workers' firm; or

(B) A loss of business by the workers' firm with the firm (or subdivision) described in paragraph (2) contributed importantly to the workers' separation or threat of separation.

In order for the Division of Trade Adjustment Assistance to issue a certification of eligibility to apply for Alternative Trade Adjustment Assistance (ATAA) for older workers, the group eligibility requirements of Section 246(a)(3)(A)(ii) of the Trade Act must be met.

1. Whether a significant number of workers in the workers' firm are 50 years of age or older.

2. Whether the workers in the workers' firm possess skills that are not easily transferable.

3. The competitive conditions within the workers' industry (i.e., conditions within the industry are adverse).

Affirmative Determinations for Worker Adjustment Assistance

The following certifications have been issued. The date following the company name and location of each determination references the impact date for all workers of such determination.

The following certifications have been issued. The requirements of Section 222(a)(2)(A) (increased imports) of the Trade Act have been met.

TA–W–64,224; Ryder Integrated Logistics, Inc., Division of Ryder Systems, Moraine, OH: October 10, 2007

The following certifications have been issued. The requirements of Section 222(a)(2)(B) (shift in production) of the Trade Act have been met.

TA–W–64,251; Sperian Fall Protection, Fall Protection Division, Franklin, PA: October 6, 2007

The following certifications have been issued. The requirements of Section 222(b) (supplier to a firm whose workers are certified eligible to apply for TAA) of the Trade Act have been met.

None.

The following certifications have been issued. The requirements of Section 222(b) (downstream producer for a firm whose workers are certified eligible to apply for TAA based on increased imports from or a shift in production to Mexico or Canada) of the Trade Act have been met.

None.

Affirmative Determinations for Worker Adjustment Assistance and Alternative Trade Adjustment Assistance

The following certifications have been issued. The date following the company name and location of each determination references the impact date for all workers of such determination.

The following certifications have been issued. The requirements of Section 222(a)(2)(A) (increased imports) and Section 246(a)(3)(A)(ii) of the Trade Act have been met.

TA–W–64,341; Affinia Brake Parts, Inc., Division of Affinia, Inc, Litchfield, IL: August 25, 2008

TA–W–64,402; Major Custom Cable, A Subsidiary of RHC Holding, Inc., Jackson, MO: November 7, 2007

TA–W–63,893; Ingersoll-Rand, Ives Division, New Haven, CT: August 18, 2007

TA–W–64,014; Delphi Corporation, Powertrain Division, Customer

Technical Center Michigan, Auburn Hills, MI: September 9, 2007

TA–W–64,018; Creative Converting, A Division of Hoffmaster Group, Appleton, WI: September 9, 2007

TA–W–64,069; Norwalk International Wood Products, Byrdstown, TN: September 15, 2007

TA–W–64,129; Broyhill Furniture Industries, Inc., Lenoir Chair #5, aka Taylorsville Plant, Taylorsville, NC: September 26, 2007

TA–W–64,165; Adrian Fabricators, Inc., Also Known as Cargotainer, Adrian, MI: October 3, 2007

TA–W–64,209; Federal Screw Works, Big Rapids, MI: October 9, 2007

TA–W–64,273; Century Furniture, Casegoods, Hickory, NC: March 29, 2008

TA–W–64,280; Phoenix Leather, Inc., Brockton, MA: October 23, 2007

TA–W–64,315; Volunteer Circuits, Inc., Bells, TN: October 30, 2007

TA–W–64,343; Lear Corporation, Seating Systems Division, Lear Tech Group, Southfield, MI: March 8, 2008

TA–W–64,320; Wearbest Sil-Tex Mills, Ltd., Garfield, NJ: October 30, 2007

TA–W–64,385; Android Industries, LLC, Norcross, GA: November 5, 2007

The following certifications have been issued. The requirements of Section 222(a)(2)(B) (shift in production) and Section 246(a)(3)(A)(ii) of the Trade Act have been met.

TA–W–64,159; Panasonic Automotive Systems Company of America, Division of Panasonic North American, Peachtree City, GA: September 22, 2007

TA–W–64,167; Sanmina-SCI USA, Inc., Printed Circuit Division, Costa Mesa, CA: October 2, 2007

TA–W–64,188; Winston Furniture Company of Alabama, A Subsidiary of Brown Jordan International, Haleyville, AL: October 6, 2007

TA–W–64,192; Freudenberg-NOK, Brake Division, Scottsburg, IN: December 6, 2008

TA–W–64,201; Align Technology, Inc., Order Acquisition Division, Santa Clara, CA: October 9, 2007

TA–W–64,225; Rheem Sales Company, Inc., A Subsidiary of Rheem Manufacturing Co., Milledgeville, GA: October 14, 2007

TA–W–64,249; Gates Corporation, Power Transmission Division, A Subsidiary of Tompkins, Moncks Corner, SC: October 17, 2007

TA–W–64,298; Steel Technologies, Flint, MI: October 27, 2007

TA–W–64,305; Summit Polymers, Inc., Plant 11, Shelbyville, TN: October 29, 2007

TA–W–64,327A; Jatco USA, Inc., Quality Investigations Department, Wixom, MI: October 30, 2007

TA–W–64,327B; Jatco USA, Inc., Administrative Department, Wixom, MI: October 30, 2007

TA–W–64,327; Jatco USA, Inc., Remanufacturing Department, Wixom, MI: October 30, 2007

TA–W–64,362; Lear Corporation, Global Electrical and Electronics Division, Zanesville, OH: December 30, 2008

TA–W–64,390; Sensata Technologies, Inc., Warehouse Facility, Brownsville, TX: November 5, 2007

TA–W–64,403A; Rapco Horizon Company, A Subsidiary of RHC Holdings, Audio Division, Jackson, MO: November 7, 2007

TA–W–64,403; Rapco Horizon Company, A Subsidiary of RHC Holdings, Audio-Advance Division, Advance, MO: November 7, 2007

TA–W–63,889; Harris Stratex Networks Operating Corporation, Microwave Component Operation Division, San Jose, CA: August 5, 2007

TA–W–64,004; Trelleborg Wheel Systems America, Inc., Hartville, OH: September 8, 2007

TA–W–64,244; Nautilus, Inc., Tulsa, OK: October 15, 2010

TA–W–64,253A; Amkor Technology, Inc., Wafer Processing Services Operations Group, Research Triangle Park, NC: November 16, 2007

TA–W–64,253; Amkor Technology, Inc., Morrisville, NC: November 16, 2007

TA–W–64,270; Thermo Fisher Scientific, Anatomical Pathology Division, Fremont, CA: October 22, 2007

TA–W–64,274; Item Eyes, Inc., Subsidiary of The Hamsphire Group, New York, NY: October 23, 2007

TA–W–64,342; Hyosung, Inc., American Steel Cord, Scottsburg, IN: November 3, 2007

TA–W–64,349; Wee Ones, Inc., Paris, MO: October 30, 2007

TA–W–64,365; ElectroCraft New Hampshire, Dover, NH: November 5, 2007

The following certifications have been issued. The requirements of Section 222(b) (supplier to a firm whose workers are certified eligible to apply for TAA) and Section 246(a)(3)(A)(ii) of the Trade Act have been met.

TA–W–64,098; Excello Engineered Systems, LLC, Macedonia, OH: September 16, 2007

TA–W–64,196; Martinrea, Heavy Stamping Division, Shelbyville, KY: October 8, 2007

TA–W–64,303; BSI Safety Textiles, ITG Automotive Safety, South Hill, VA: October 22, 2007

TA–W–64,316; Modern Plastics Corporation, Coloma, MI: October 24, 2007

TA–W–64,333; TrimQuest, LLC, Walker, MI: October 31, 2007

TA–W–64,463; Alltrista Plastics, LLC, d/b/a Jarden Plastic Solutions, Fort Smith, AR: November 18, 2007

The following certifications have been issued. The requirements of Section 222(b) (downstream producer for a firm whose workers are certified eligible to apply for TAA based on increased imports from or a shift in production to Mexico or Canada) and Section 246(a)(3)(A)(ii) of the Trade Act have been met.

None.

Negative Determinations for Alternative Trade Adjustment Assistance

In the following cases, it has been determined that the requirements of 246(a)(3)(A)(ii) have not been met for the reasons specified.

The Department has determined that criterion (1) of Section 246 has not been met. The firm does not have a significant number of workers 50 years of age or older.

TA–W–64,224; Ryder Integrated Logistics, Inc., Division of Ryder Systems, Moraine, OH

The Department has determined that criterion (2) of Section 246 has not been met. Workers at the firm possess skills that are easily transferable.

TA–W–64,251; Sperian Fall Protection, Fall Protection Division, Franklin, PA

The Department has determined that criterion (3) of Section 246 has not been met. Competition conditions within the workers' industry are not adverse.

None.

Negative Determinations for Worker Adjustment Assistance and Alternative Trade Adjustment Assistance

In the following cases, the investigation revealed that the eligibility criteria for worker adjustment assistance have not been met for the reasons specified.

Because the workers of the firm are not eligible to apply for TAA, the workers cannot be certified eligible for ATAA.

The investigation revealed that criteria (a)(2)(A)(I.A.) and (a)(2)(B)(II.A.) (employment decline) have not been met.

TA–W–64,175; Hanley Wood, LLC, Business Media Division, Chicago, MI

The investigation revealed that criteria (a)(2)(A)(I.B.) (Sales or

production, or both, did not decline) and (a)(2)(B)(II.B.) (shift in production to a foreign country) have not been met.

TA–W–64,017; The News Messenger, Graphics Department, Fremont, WI

The investigation revealed that criteria (a)(2)(A)(I.C.) (increased imports) and (a)(2)(B)(II.B.) (shift in production to a foreign country) have not been met.

TA–W–63,098; Ineos-Nova, LLC, Belpre, CT

TA–W–64,001; Fleetwood Travel Trailers of Oregon, Inc., La Grande, MI

TA–W–64,124; Certified Metal Finishing, Benton Harbor, TN

TA–W–64,172; Zippo Manufacturing Company, Bradford, NC

TA–W–64,194; Formica Corporation, Evendale, MI

TA–W–64,208; Anchor Glass Container Corporation, Zanesville Mould Division, Zanesville, NC

TA–W–64,364; Westlake USA, Inc., A Subsidiary of Glabman-Himes, High Point, TN

The workers' firm does not produce an article as required for certification under Section 222 of the Trade Act of 1974.

TA–W–64,205; The Ohio Heart and Vascular Center, Transcription Department, Cincinnati, OH

TA–W–64,272; The Nielsen Company (US), LLC, Fond du Lac, MA

The investigation revealed that criteria of Section 222(b)(2) has not been met. The workers' firm (or subdivision) is not a supplier to or a downstream producer for a firm whose workers were certified eligible to apply for TAA.

None.

I hereby certify that the aforementioned determinations were issued during the period of November 17 through November 21, 2008. Copies of these determinations are available for inspection in Room C–5311, U.S. Department of Labor, 200 Constitution Avenue, NW., Washington, DC 20210 during normal business hours or will be mailed to persons who write to the above address.

Dated: December 3, 2008.

Erin Fitzgerald,

Director, Division of Trade Adjustment Assistance.

[FR Doc. E8–29169 Filed 12–9–08; 8:45 am]

BILLING CODE 4510–FN–P

DEPARTMENT OF LABOR

Employment and Training Administration

Notice of Determinations Regarding Eligibility To Apply for Worker Adjustment Assistance and Alternative Trade Adjustment Assistance

In accordance with section 223 of the Trade Act of 1974, as amended (19 U.S.C. 2273) the Department of Labor herein presents summaries of determinations regarding eligibility to apply for trade adjustment assistance for workers (TA–W) number and alternative trade adjustment assistance (ATAA) by (TA–W) number issued during the period of *November 24 through November 28, 2008.*

In order for an affirmative determination to be made for workers of a primary firm and a certification issued regarding eligibility to apply for worker adjustment assistance, each of the group eligibility requirements of section 222(a) of the Act must be met.

I. Section (a)(2)(A), all of the following must be satisfied:

A. A significant number or proportion of the workers in such workers' firm, or an appropriate subdivision of the firm, have become totally or partially separated, or are threatened to become totally or partially separated;

B. The sales or production, or both, of such firm or subdivision have decreased absolutely; and

C. Increased imports of articles like or directly competitive with articles produced by such firm or subdivision have contributed importantly to such workers' separation or threat of separation and to the decline in sales or production of such firm or subdivision; or

II. Section (a)(2)(B), both of the following must be satisfied:

A. A significant number or proportion of the workers in such workers' firm, or an appropriate subdivision of the firm, have become totally or partially separated, or are threatened to become totally or partially separated;

B. There has been a shift in production by such workers' firm or subdivision to a foreign country of articles like or directly competitive with articles which are produced by such firm or subdivision; and

C. One of the following must be satisfied:

1. The country to which the workers' firm has shifted production of the articles is a party to a free trade agreement with the United States;

2. The country to which the workers' firm has shifted production of the articles to a beneficiary country under the Andean Trade Preference Act, African Growth and Opportunity Act, or the Caribbean Basin Economic Recovery Act; or

3. There has been or is likely to be an increase in imports of articles that are like or directly competitive with articles which are or were produced by such firm or subdivision.

Also, in order for an affirmative determination to be made for secondarily affected workers of a firm and a certification issued regarding eligibility to apply for worker adjustment assistance, each of the group eligibility requirements of section 222(b) of the Act must be met.

(1) Significant number or proportion of the workers in the workers' firm or an appropriate subdivision of the firm have become totally or partially separated, or are threatened to become totally or partially separated;

(2) The workers' firm (or subdivision) is a supplier or downstream producer to a firm (or subdivision) that employed a group of workers who received a certification of eligibility to apply for trade adjustment assistance benefits and such supply or production is related to the article that was the basis for such certification; and

(3) Either—

(A) The workers' firm is a supplier and the component parts it supplied for the firm (or subdivision) described in paragraph (2) accounted for at least 20 percent of the production or sales of the workers' firm; or

(B) A loss of business by the workers' firm with the firm (or subdivision) described in paragraph (2) Contributed importantly to the workers' separation or threat of separation.

In order for the Division of Trade Adjustment Assistance to issue a certification of eligibility to apply for Alternative Trade Adjustment Assistance (ATAA) for older workers, the group eligibility requirements of Section 246(a)(3)(A)(ii) of the Trade Act must be met.

1. Whether a significant number of workers in the workers' firm are 50 years of age or older.

2. Whether the workers in the workers' firm possess skills that are not easily transferable.

3. The competitive conditions within the workers' industry (i.e., conditions within the industry are adverse).

Affirmative Determinations for Worker Adjustment Assistance

The following certifications have been issued. The date following the company name and location of each determination references the impact

date for all workers of such determination.

The following certifications have been issued. The requirements of section 222(a)(2)(A) (increased imports) of the Trade Act have been met.

TA–W–64,304; American Die Corporation, Chesterfield, MI: October 10, 2007

The following certifications have been issued. The requirements of section 222(a)(2)(B) (shift in production) of the Trade Act have been met.

None.

The following certifications have been issued. The requirements of section 222(b) (supplier to a firm whose workers are certified eligible to apply for TAA) of the Trade Act have been met.

None.

The following certifications have been issued. The requirements of section 222(b) (downstream producer for a firm whose workers are certified eligible to apply for TAA based on increased imports from or a shift in production to Mexico or Canada) of the Trade Act have been met.

None.

Affirmative Determinations for Worker Adjustment Assistance and Alternative Trade Adjustment Assistance

The following certifications have been issued. The date following the company name and location of each determination references the impact date for all workers of such determination.

The following certifications have been issued. The requirements of section 222(a)(2)(A) (increased imports) and section 246(a)(3)(A)(ii) of the Trade Act have been met.

TA–W–63,880; Cequent Electrical Products, Inc., Tekonsha, MI: August 6, 2007

TA–W–64,255; Hoffman/New Yorker, Inc., Dushore, PA: October 17, 2007

TA–W–64,206; Hutchinson FTS, Inc., Reading, MI: October 9, 2007

TA–W–64,233; Sun Mountain Lumber, Inc., Deer Lodge, MT: October 14, 2007

TA–W–64,319A; McConkey and McConkey Machinery, Englewood, TN: October 28, 2007

TA–W–64,319; Allied Hosiery Mill, Inc., Englewood, TN: October 28, 2007

TA–W–64,153; Hart Schaffner and Marx dba Thorngate, Ltd; A Subsidiary of Hartmarx Corporation, Cape Girardeau, MO: September 30, 2007

The following certifications have been issued. The requirements of section 222(a)(2)(B) (shift in production) and section 246(a)(3)(A)(ii) of the Trade Act have been met.

TA–W–64,083; American Axle and Manufacturing, Detroit Manufacturing Complex, Detroit, MI: September 16, 2007

TA–W–64,118; Lincoln Brass Works, Inc., dba Mueller Gas Products, Jacksboro, TN: September 25, 2007

TA–W–64,161; Titus Tool Co., Inc., Kent, WA: October 1, 2007

TA–W–64,219; GKN Sinter Metals, Sinter Metals Division, Emporium, PA: October 3, 2007

TA–W–64,229A; Hanesbrand, Inc., Formerly known as Sara Lee Branded Apparel, Forest City, NC: October 5, 2007

TA–W–64,229B; Hanesbrand, Inc., Formerly known as Sara Lee Branded Apparel, Gastonia, NC: October 5, 2007

TA–W–64,229C; Hanesbrand, Inc., Formerly known as Sara Lee Branded Apparel, Rockingham, NC: October 5, 2007

TA–W–64,229; Hanesbrand, Inc., Formerly known as Sara Lee Branded Apparel, Eden, NC: October 5, 2007

TA–W–64,265; Cooper-Crouse-Hinds, Cooper Interconnect Division, LaGrange, NC: October 16, 2007

TA–W–64,276; American Safety Razor Co./Personna; Industrial/Medical Division, Verona, VA: October 23, 2007

TA–W–64,356; Union Apparel, Inc., Norvelt, PA: November 4, 2007

TA–W–64,400; Lincolnton Manufacturing, Inc., A Subsidiary of Century Place, Lincolnton, NC: November 11, 2007

TA–W–64,427A; Worldtex, Inc., Greensboro Corporate Office, Greensboro, NC: November 13, 2007

TA–W–64,427; Worldtex, Inc., Hickory Corporate Office, Hickory, NC: November 13, 2007

TA–W–64,483; Fisher and Company, Inc., Corporate Office, St. Clair Shores, MI: November 19, 2007

TA–W–64,350; Omega Motion, A Subsidiary of Legget and Platt, Inc., Saltillo, MS: November 3, 2007

TA–W–64,261; LexisNexis; Elsevier Dayton IT Division, Miamisburg, OH: October 16, 2007

TA–W–64,266; Katun Corporation, Environmental Business Systems Division, Austin, TX: October 21, 2007

TA–W–64,283; STEC, Inc., Santa Ana, CA: October 22, 2007

TA–W–64,438; Boston Scientific, Interventional Technologies Division, Murrieta, CA: November 12, 2007

TA–W–64,476; Iowa Precision Industries, TDC Division, Cedar Rapids, IA: November 13, 2007

The following certifications have been issued. The requirements of section 222(b) (supplier to a firm whose workers are certified eligible to apply for TAA) and section 246(a)(3)(A)(ii) of the Trade Act have been met.

TA–W–64,264; General Motors Corporation, Pittsburgh Metal Center, West Mifflin, PA: October 22, 2007

TA–W–64,399; JC Tec Industries, Annville, KY: November 10, 2007

TA–W–64,419; ATC Panels, Inc., Franklin, VA: November 12, 2007

TA–W–64,456; ILPea, Inc., A Subsidiary of Holm Industries, Fort Smith, AR: October 13, 2008.

The following certifications have been issued. The requirements of section 222(b) (downstream producer for a firm whose workers are certified eligible to apply for TAA based on increased imports from or a shift in production to Mexico or Canada) and section 246(a)(3)(A)(ii) of the Trade Act have been met.

None.

Negative Determinations for Alternative Trade Adjustment Assistance

In the following cases, it has been determined that the requirements of 246(a)(3)(A)(ii) have not been met for the reasons specified.

The Department has determined that criterion (1) of section 246 has not been met. The firm does not have a significant number of workers 50 years of age or older.

TA–W–64,304; American Die Corporation, Chesterfield, MI

The Department has determined that criterion (2) of section 246 has not been met. Workers at the firm possess skills that are easily transferable.

None.

The Department has determined that criterion (3) of section 246 has not been met. Competition conditions within the workers' industry are not adverse.

None.

Negative Determinations for Worker Adjustment Assistance and Alternative Trade Adjustment Assistance

In the following cases, the investigation revealed that the eligibility criteria for worker adjustment assistance have not been met for the reasons specified.

Because the workers of the firm are not eligible to apply for TAA, the workers cannot be certified eligible for ATAA.

The investigation revealed that criteria (a)(2)(A)(I.A.) and (a)(2)(B)(II.A.) (employment decline) have not been met.

TA–W–64,195; Enefco USA, Inc., Auburn, ME

The investigation revealed that criteria (a)(2)(A)(I.B.) (Sales or production, or both, did not decline) and (a)(2)(B)(II.B.) (shift in production to a foreign country) have not been met.

None.

The investigation revealed that criteria (a)(2)(A)(I.C.) (increased imports) and (a)(2)(B)(II.B.) (shift in production to a foreign country) have not been met.

TA–W–63,981; Prime Tanning Company, Inc., Berwick, ME

TA–W–64,145; Flakeboard America, LLC; Simsboro, LA

TA–W–64,214; KDH Defense Systems, Inc., Carmichaels, PA

TA–W–64,246; BorgWarner Morse Tech, Inc., Transmission Components, Ithaca, NY

TA–W–64,252; Lear Corporation; Seating Systems Division, Wentzville, MO

The workers' firm does not produce an article as required for certification under section 222 of the Trade Act of 1974.

TA–W–64,190; Hafner USA, Inc., New York, NY

TA–W–64,394; Ameriprise Financial, Inc., Service Delivery, Online Documentation, Minneapolis, MN

TA–W–64,473; Magnolia Garment Corporation, Tylertown, MS

The investigation revealed that criteria of section 222(b)(2) has not been met. The workers' firm (or subdivision) is not a supplier to or a downstream producer for a firm whose workers were certified eligible to apply for TAA.

None.

I hereby certify that the aforementioned determinations were issued during the period of *November 24 through November 28, 2008.* Copies of these determinations are available for inspection in Room C–5311, U.S. Department of Labor, 200 Constitution Avenue, NW., Washington, DC 20210 during normal business hours or will be mailed to persons who write to the above address.

Dated: December 3, 2008.

Erin FitzGerald,

Director, Division of Trade Adjustment Assistance.

[FR Doc. E8–29170 Filed 12–9–08; 8:45 am]

BILLING CODE 4510–FN–P

DEPARTMENT OF LABOR

Employment and Training Administration

Investigations Regarding Certifications of Eligibility To Apply for Worker Adjustment Assistance and Alternative Trade Adjustment Assistance

Petitions have been filed with the Secretary of Labor under Section 221(a) of the Trade Act of 1974 (''the Act'') and are identified in the Appendix to this notice. Upon receipt of these petitions, the Director of the Division of Trade Adjustment Assistance, Employment and Training Administration, has instituted investigations pursuant to Section 221(a) of the Act.

The purpose of each of the investigations is to determine whether the workers are eligible to apply for adjustment assistance under Title II, Chapter 2, of the Act. The investigations will further relate, as appropriate, to the determination of the date on which total or partial separations began or threatened to begin and the subdivision of the firm involved.

The petitioners or any other persons showing a substantial interest in the subject matter of the investigations may request a public hearing, provided such request is filed in writing with the Director, Division of Trade Adjustment Assistance, at the address shown below, not later than December 22, 2008.

Interested persons are invited to submit written comments regarding the subject matter of the investigations to the Director, Division of Trade Adjustment Assistance, at the address shown below, not later than December 22, 2008.

The petitions filed in this case are available for inspection at the Office of the Director, Division of Trade Adjustment Assistance, Employment and Training Administration, U.S. Department of Labor, Room C–5311, 200 Constitution Avenue, NW., Washington, DC 20210.

Signed at Washington, DC, this 26th day of November 2008.

Erin Fitzgerald,

Director, Division of Trade Adjustment Assistance.

APPENDIX

[TAA petitions instituted between 11/10/08 and 11/14/08]

TA–W	Subject firm (petitioners)	Location	Date of institution	Date of petition
64372	Mitsubishi Motors Manufacturing (Union)	Normal, IL	11/10/08	11/06/08
64373	Whirlpool (Wkrs)	Milan, TN	11/10/08	11/04/08
64374	G.E. Healthcare, Verification-Validation Dept. (State)	Seattle, WA	11/10/08	11/04/08
64375	Emerson Network Power (Comp)	Lorain, OH	11/10/08	11/07/08
64376	Johnson Controls, Inc. (State)	Suwanee, GA	11/10/08	11/05/08
64377	Ryder (State)	Norcross, GA	11/10/08	11/05/08
64378	Hancock Company/DBA Gitman & Co/IAG (Comp)	Ashland, PA	11/10/08	11/07/08
64379	Chole Hersee Company (Comp)	So. Boston, MA	11/10/08	11/05/08
64380	Alcoa Rockdale Operations (USW)	Rockdale, TX	11/10/08	11/06/08
64381	Metlife Insurance (Wkrs)	Tulsa, OK	11/10/08	11/07/08
64382	Blumenthal Mills (Wkrs)	Marion, SC	11/10/08	11/07/08
64383	IBM (State)	Hopewell Junction, NY	11/10/08	11/04/08
64384	Timken Company (State)	Dahlonega, GA	11/10/08	11/05/08
64385	Android Industries, LLC (State)	Norcross, GA	11/10/08	11/05/08
64386	Victaulic (USW)	Easton, PA	11/10/08	11/03/08
64387	U.S.G. (Wkrs)	Cloquet, MN	11/10/08	10/27/08
64388	Foam Fabricators, Inc. (State)	Forrest City, AR	11/10/08	11/07/08
64389	A. Schulman, Inc. (Wkrs)	Sharon Center, OH	11/10/08	10/17/08
64390	Sensata Technologies, Inc. (Comp)	Brownsville, TX	11/10/08	11/05/08
64391	Harris Stratex Networks (Comp)	San Antonio, TX	11/10/08	11/06/08
64392	Columbus McKinnon (Wkrs)	Lexington, TN	11/10/08	10/30/08
64393	Nikko America (Comp)	Dallas, TX	11/12/08	10/15/08
64394	Ameriprise Financial Incorporated (Wkrs)	Minneapolis, MN	11/12/08	10/31/08
64395	Armstrong Hardwood Flooring Company (IBT)	Beverly, WV	11/12/08	11/10/08

APPENDIX—Continued

[TAA petitions instituted between 11/10/08 and 11/14/08]

TA–W	Subject firm (petitioners)	Location	Date of institution	Date of petition
64396	Cerro Flow Products, Inc. (USW)	Sauget, IL	11/12/08	11/10/08
64397	ITT Marine and Leisure (Comp)	Gloucester, MA	11/12/08	11/07/08
64398	Thayer Coggin, Inc. (Comp)	High Point, NC	11/12/08	11/10/08
64399	JC Tec Industries, Inc. (Comp)	Annville, KY	11/12/08	11/10/08
64400	Lincolnton Manufacturing, Inc. (Comp)	Lincolnton, NC	11/12/08	11/11/08
64401	Qimonda 200nm Facility (Wkrs)	Sandston, VA	11/12/08	11/11/08
64402	Major Custom Cable (Comp)	Jackson, MO	11/12/08	11/07/08
64403	Rapco Horizon Company (Comp)	Advance, MO	11/12/08	11/07/08
64403A	Rapco Horizon Company (Comp)	Jackson, MO	11/12/08	11/07/08
64404	Electronic Data Systems (EDS) (Comp)	Dayton, OH	11/12/08	11/03/08
64405	ITW Tomco (Wkrs)	Bryan, OH	11/12/08	11/10/08
64406	Tektronix (State)	Beaverton, OR	11/13/08	11/10/08
64407	Northern Tool/Star Cutter Co. (48647)	Mio, MI	11/13/08	11/10/08
64408	Theis Precision Steel (State)	Bristol, CT	11/13/08	11/10/08
64409	GE Sensing and Inspection Technologies (Union)	St. Marys, PA	11/13/08	11/10/08
64410	NeoPhotonics Corporation (Rep)	Newark, CA	11/13/08	11/10/08
64411	Arkansas Aluminum Alloys, Inc. (State)	Hot Springs, AR	11/13/08	11/10/08
64412	United Airlines (State)	San Francisco, CA	11/13/08	10/27/08
64413	Visteon System, LLC North Penn Plant (UAW)	Worcester, PA	11/13/08	10/29/08
64414	Western Union Financial Services (Wkrs)	Bridgeton, MO	11/13/08	10/13/08
64415	St. Louis Music (Comp)	St. Louis, MO	11/13/08	11/06/08
64416	New Generations Furniture Company (Comp)	McKenzie, TN	11/13/08	11/12/08
64417	Wee Ones, Inc. (Comp)	St. Peters, MO	11/13/08	11/05/08
64418	Blockbuster (State)	McKinney, TX	11/13/08	11/10/08
64419	ATC Panels, Inc. (Comp)	Franklin, VA	11/13/08	11/12/08
64420	Nordyne, Inc. (State)	Poplar Bluff, MO	11/13/08	11/10/08
64421	PASCI, Inc. (Comp)	ImLay City, MI	11/13/08	11/12/08
64422	Mais Pet Care, US (Wkrs)	Everson, PA	11/13/08	11/12/08
64423	The Millwork Trading Co., Ltd (Wkrs)	Mill Valley, CA	11/13/08	11/12/08
64424	Schawk Stamford (Union)	Stamford, CT	11/13/08	11/12/08
64425	Tenere (State)	Oakdale, MN	11/13/08	11/12/08
64426	Greif (USW)	Greenville, OH	11/13/08	11/10/08
64427	Worldtex, Inc. (Comp)	Hickory, NC	11/14/08	11/13/08
64428	West Penn Plastic, Inc. (Comp)	New Castle, PA	11/14/08	11/13/08
64429	National Starch and Chemical Company (Comp)	Hazleton, PA	11/14/08	11/03/08
64430	Maersk (State)	Charlotte, NC	11/14/08	11/13/08
64431	Alyeska Pipeline Service Company (Comp)	Anchorage, AK	11/14/08	11/10/08
64432	Shurflo, LLC (Comp)	Cypress, CA	11/14/08	11/03/08
64433	Riverside Furniture Corporation—Fort Smith (State)	Fort Smith, AR	11/14/08	11/13/08
64434	Riverside Furniture Corporation—Russellville (State)	Russellville, AR	11/14/08	11/13/08
64435	Thiele Manufacturing, LLC (UMWA)	Windber, PA	11/14/08	11/13/08
64436	Georgia Pacific, Inc. (State)	Coos Bay, OR	11/14/08	11/13/08
64437	United Airlines (IBT)	Seattle, WA	11/14/08	11/13/08
64438	Boston Scientific (Rep)	Murrieta, CA	11/14/08	11/12/08
64439	Cooper's Hosiery (State)	Fort Payne, AL	11/14/08	11/13/08
64440	JDSU (Wkrs)	San Jose, CA	11/14/08	11/10/08

[FR Doc. E8–29168 Filed 12–9–08; 8:45 am]

BILLING CODE 4510–FN–P

DEPARTMENT OF LABOR

Employment and Training Administration

[TA–W–63,719]

3M Precision Optics, Inc.; Including On-Site Leased Workers From Volt, Cincinnati, OH; Notice of Revised Determination on Reconsideration

On October 10, 2008, the Department issued an Affirmative Determination Regarding Application on Reconsideration applicable to workers and former workers of the subject firm. The notice was published in the **Federal Register** on October 22, 2008 (73 FR 63021).

The previous investigation initiated on July 21, 2008, resulted in a negative determination issued on September 3, 2008, was based on the finding that imports of optical systems for projection televisions and projectors did not contribute importantly to worker separations at the subject firm and no shift in production to a foreign source occurred. The denial notice was published in the **Federal Register** on September 18, 2008 (73 FR 54174).

In the request for reconsideration, the petitioner provided additional information regarding a shift in production of optical systems for projection televisions and projectors from the subject firm to China and alleged that imports of projection televisions and projectors increased.

The Department contacted the company official to verify whether the subject firm imported optical systems for projection televisions and projectors following a shift to China.

The investigation on reconsideration revealed that the subject firm shifted production of optical systems for projection televisions and projectors and increased imports of optical systems for projection televisions and projectors during the relevant period. It was also revealed that employment and sales declined at 3M Precision Optics,

Inc., Cincinnati, Ohio during the relevant period.

In accordance with Section 246 the Trade Act of 1974 (26 U.S.C. 2813), as amended, the Department of Labor herein presents the results of its investigation regarding certification of eligibility to apply for alternative trade adjustment assistance (ATAA) for older workers.

In order for the Department to issue a certification of eligibility to apply for ATAA, the group eligibility requirements of Section 246 of the Trade Act must be met. The Department has determined in this case that the requirements of Section 246 have been met.

A significant number of workers at the firm are age 50 or over and possess skills that are not easily transferable. Competitive conditions within the industry are adverse.

Conclusion

After careful review of the facts obtained in the investigation, I determine that there was a shift in production from the workers' firm or subdivision to China of articles that are like or directly competitive with those produced by the subject firm or subdivision, and there has been or is likely to be an increase in imports of like or directly competitive articles. In accordance with the provisions of the Act, I make the following certification:

All workers of 3M Precision Optics, Inc., including on-site leased workers from Volt, Cincinnati, Ohio, who became totally or partially separated from employment on or after July 18, 2007, through two years from the date of this certification, are eligible to apply for adjustment assistance under Section 223 of the Trade Act of 1974, and are eligible to apply for alternative trade adjustment assistance under Section 246 of the Trade Act of 1974.

Signed in Washington, DC this 26th day of November 2008.

Elliott S. Kushner,

Certifying Officer, Division of Trade Adjustment Assistance.

[FR Doc. E8–29171 Filed 12–9–08; 8:45 am]

BILLING CODE 4510–FN–P

DEPARTMENT OF LABOR

Employment and Training Administration

[TA–W–64,346]

Casey Tool & Machine Co., Inc., 815 Reasor Road, Charleston, IL; Notice of Termination of Investigation

Pursuant to Section 221 of the Trade Act of 1974, as amended, an investigation was initiated on November 4, 2008, in response to a worker petition filed a One-stop operator on behalf of workers at Casey Tool & Machine Co., Inc., 815 Reasor Road, Charleston, Illinois.

All workers of the subject firm are covered by an active certification (TA–W–64,151A (amended)), which does not expire until October 22, 2010. Consequently, further investigation in this case would serve no purpose, and the investigation has been terminated.

Signed at Washington, DC this 20th day of November 2008.

Linda G. Poole,

Certifying Officer, Division of Trade Adjustment Assistance.

[FR Doc. E8–29173 Filed 12–9–08; 8:45 am]

BILLING CODE 4510–FN–P

DEPARTMENT OF LABOR

Employment and Training Administration

[TA–W–64,231, TA–W–64,231A]

Haas TCM Inc., Employed On-Site at Chrysler LLC, St. Louis South Assembly Plant, Fenton, MO; Haas TCM Inc., Employed On-Site at Chrysler LLC, St. Louis North Assembly Plant, Fenton, MO; Notice of Termination of Investigation

Pursuant to Section 221 of the Trade Act of 1974, as amended, an investigation was initiated on October 16, 2008, in response to a worker petition filed by workers of HAAS TCM Inc., employed on-site at Chrysler LLC, St. Louis South Assembly Plant, Fenton, Missouri (TA–W–64,231) and workers of HAAS TCM Inc., employed on-site at Chrysler LLC, St. Louis North Assembly Plant, Fenton, Missouri (TA–W–64,231A).

The petitioning group of workers is covered by an active certification at Chrysler LLC, St. Louis South Assembly Plant, Fenton, Missouri (TA–W–62,438), which expires December 14, 2009; and at Chrysler LLC, St. Louis North Assembly Plant, Fenton, Missouri (TA–W–63,052) which expires on April 14, 2010.

Consequently, further investigation in this case would serve no purpose, and the investigation has been terminated.

Signed in Washington, DC, this 18th day of November 2008.

Richard Church,

Certifying Officer, Division of Trade Adjustment Assistance.

[FR Doc. E8–29172 Filed 12–9–08; 8:45 am]

BILLING CODE 4510–FN–P

DEPARTMENT OF LABOR

Employment and Training Administration

[TA–W–64,448]

Scott Curtis Construction Company, Inc., Granite Falls, NC; Notice of Termination of Investigation

Pursuant to Section 221 of the Trade Act of 1974, as amended, an investigation was initiated on November 17, 2008 in response to a petition filed by a company official on behalf of workers at Scott Curtis Construction Company, Inc., Granite Falls, North Carolina. The workers at the subject facility build houses.

The petitioner has requested that the petition be withdrawn. Consequently, the investigation has been terminated.

Signed in Washington, DC, this 19th day of November 2008.

Richard Church,

Certifying Officer, Division of Trade Adjustment Assistance.

[FR Doc. E8–29174 Filed 12–9–08; 8:45 am]

BILLING CODE 4510–FN–P

DEPARTMENT OF LABOR

Employment and Training Administration

[TA–W–64,450]

Weather Shield Manufacturing, Inc., Medford, WI; Notice of Termination of Investigation

Pursuant to Section 221 of the Trade Act of 1974, as amended, an investigation was initiated on November 17, 2008 in response to a petition filed on behalf of the workers at Weather Shield Manufacturing, Inc., Medford, Wisconsin.

The worker petition submitted did not meet the criteria of three petitioners employed at the location for which the petition was submitted.

The petitioners have requested that the petition be withdrawn. Consequently, the investigation has been terminated.

Signed at Washington, DC, this 25th day of November 2008.

Richard Church,

Certifying Officer, Division of Trade Adjustment Assistance.

[FR Doc. E8–29167 Filed 12–9–08; 8:45 am]

BILLING CODE 4510–FN–P

NUCLEAR REGULATORY COMMISSION

[Docket No. 52–036]

Entergy Operations, Inc., et al.; Acceptance for Docketing of an Application for Combined License (COL) for River Bend, Unit 3

On September 25, 2008, Entergy Operations, Incorporated, on behalf of itself and Entergy Mississippi, Incorporated, Entergy Louisiana, LLC, and Entergy Gulf States Louisiana, LLC filed with the U.S. Nuclear Regulatory Commission (NRC, the Commission) pursuant to Section 103 of the Atomic Energy Act and Title 10 of the Code of Federal Regulations (10 CFR) Part 52, ''Licenses, Certifications, and Approvals for Nuclear Power Plants,'' an application for a combined license (COL) for an economic simplified boiling water reactor (ESBWR) nuclear power plant, to be located in West Feliciana Parish, Louisiana. The reactor is to be identified as River Bend Station, Unit 3. A notice of receipt and availability of this application was previously published in the **Federal Register** (73 FR 67895 on November 17, 2008).

The NRC staff has determined that Entergy Operations, Incorporated, et al. has submitted information in accordance with 10 CFR Part 2, ''Rules of Practice for Domestic Licensing Proceedings and Issuance of Orders,'' and Part 52 that is sufficiently complete and acceptable for docketing. The docket number established for this application is 52–036.

The NRC staff will perform a detailed technical review of the application. Docketing of the COL application does not preclude the NRC from requesting additional information from the applicant as the review proceeds, nor does it predict whether the Commission will grant or deny the application. The Commission will conduct a hearing in accordance with Subpart L, ''Informal Hearing Procedures for NRC Adjudications,'' of 10 CFR Part 2 and will receive a report on the COL application from the Advisory Committee on Reactor Safeguards in accordance with 10 CFR 52.87, ''Referral to the Advisory Committee on Reactor Safeguards (ACRS).'' If the Commission finds that the application meets the applicable standards of the Atomic Energy Act and the Commission's regulations, and that required notifications to other agencies and bodies have been made, the Commission will issue a COL, in the form and containing conditions and limitations that the Commission finds appropriate and necessary.

In accordance with 10 CFR Part 51, the Commission will also prepare an environmental impact statement for the proposed action. Pursuant to 10 CFR 51.26, and as part of the environmental scoping process, the staff intends to hold a public scoping meeting. Detailed information regarding this meeting will be included in a future **Federal Register** notice. Finally, the Commission will announce in a future **Federal Register** notice the opportunity to petition for leave to intervene in the hearing required for this application.

A copy of the Entergy Operations, Inc. COL application is available for public inspection at the Commission's Public Document Room located at One White Flint North, 11555 Rockville Pike (first floor), Rockville, Maryland. The application is also available at *http://www.nrc.gov/reactors/new-reactors/col.html* and is accessible electronically from the Agencywide Documents Access and Management System (ADAMS) Public Electronic Reading Room on the Internet at the NRC Web site, *http://www.nrc.gov/reading-rm/adams.html* (ADAMS Accession No. ML082830022).

Persons who do not have access to ADAMS, or who encounter problems in accessing the documents located in ADAMS, should contact the NRC Public Document Room staff by telephone at 1–800–397–4209, (301) 415–4737 or by e-mail to *pdr@nrc.gov*.

Dated at Rockville, Maryland, this 4th day of December 2008.

For the Nuclear Regulatory Commission.

Thomas A. Kevern,

Senior Project Manager, ABWR/ESBWR Projects Branch 1, Division of New Reactor Licensing, Office of New Reactors.

[FR Doc. E8–29185 Filed 12–9–08; 8:45 am]

BILLING CODE 7590–01–P

NUCLEAR REGULATORY COMMISSION

[Docket Nos. 52–034 and 52–035]

Luminant Generation Company, LLC. Acceptance for Docketing of an Application for Combined License for Comanche Peak Nuclear Power Plant, Units 3 and 4

By letter dated September 19, 2008, as supplemented by letter(s) dated November 4, 5, 6, and 10, 2008, Luminant Generation Company LLC (Luminant) submitted an application to the U.S. Nuclear Regulatory Commission (NRC) for a combined license (COL) for two United States—Advanced Pressurized Water Reactors (US–APWR) in accordance with the requirements contained in 10 CFR Part 52, ''Licenses, Certifications and Approvals for Nuclear Power Plants.'' These reactors will be identified as Comanche Peak Nuclear Power Plant, Units 3 and 4 and are to be located at the existing Comanche Peak site in Somervell County, Texas. A notice of receipt and availability of this application was previously published in the **Federal Register** (73 FR 66276) on November 7, 2008.

The NRC staff has determined that Luminant has submitted information in accordance with 10 CFR Part 2, ''Rules of Practice for Domestic Licensing Proceedings and Issuance of Orders,'' and 10 CFR Part 52 that is acceptable for docketing. The Docket Numbers established for Units 3 and 4 are 52–034 and 52–035, respectively.

The NRC staff will perform a detailed technical review of the application. Docketing of the application does not preclude the NRC from requesting additional information from the applicant as the review proceeds, nor does it predict whether the Commission will grant or deny the application.

The Commission will conduct a hearing in accordance with Subpart L, ''Informal Hearing Procedures for NRC Adjudications,'' of 10 CFR Part 2. The notice of hearing and opportunity to petition for leave to intervene will be published at a later date in the **Federal Register**. The Commission will receive a report on the COL application from the Advisory Committee on Reactor Safeguards in accordance with 10 CFR 52.87, ''Referral to the Advisory Committee on Reactor Safeguards (ACRS).'' If the Commission finds that the COL application meets the applicable standards of the Atomic Energy Act and the Commission's regulations and that required notifications to other agencies and bodies have been made, the Commission will issue a COL. The COL will contain conditions and limitations that the Commission finds appropriate and necessary.

In accordance with 10 CFR Part 51, the Commission will also prepare an environmental impact statement for the proposed action. Pursuant to 10 CFR 51.26, and as part of the environmental scoping process, the staff intends to hold a public scoping meeting. Detailed information regarding this meeting will be included in a future **Federal Register** notice.

Documents may be examined, and/or copied for a fee, at the NRC's Public Document Room (PDR), located at One White Flint North, Public File Area O1

F21, 11555 Rockville Pike (first floor), Rockville, Maryland, and will be accessible electronically through the Agencywide Documents Access and Management System (ADAMS) Public Electronic Reading Room link at the NRC Web site *http://www.nrc.gov/reading-rm/adams.html*. The application is also available at *http://www.nrc.gov/reactors/new-reactors/col/comanche-peak.html*. Persons who do not have access to ADAMS or who encounter problems in accessing documents located in ADAMS should contact the NRC PDR Reference staff by telephone at 1–800–397–4209, 301–415–4737, or via e-mail to *pdr@nrc.gov*.

Dated at Rockville, Maryland this 2nd day of December 2008.

For the Nuclear Regulatory Commission.

Stephen Raul Monarque,

Project Manager, US–APWR Projects Branch, Division of New Reactor Licensing, Office of New Reactors.

[FR Doc. E8–29184 Filed 12–9–08; 8:45 am]

BILLING CODE 7590–01–P

NUCLEAR REGULATORY COMMISSION

[Docket No. NRC–2008–0621]

Agency Information Collection Activities: Proposed Collection; Comment Request

AGENCY: U.S. Nuclear Regulatory Commission (NRC).

ACTION: Notice of pending NRC action to submit an information collection request to the Office of Management and Budget (OMB) and solicitation of public comment.

SUMMARY: The NRC invites public comment about our intention to request the OMB's approval for renewal of an existing information collection that is summarized below. We are required to publish this notice in the **Federal Register** under the provisions of the Paperwork Reduction Act of 1995 (44 U.S.C. Chapter 35).

Information pertaining to the requirement to be submitted:

1. *The title of the information collection:* 10 CFR Part 30—Rules of General Applicability to Domestic Licensing of Byproduct Material.

2. *Current OMB approval number:* 3150–0017.

3. *How often the collection is required:* Required reports are collected and evaluated on a continuing basis as events occur. There is a one-time submittal of information to receive a license. Renewal applications are submitted every 10 years. Information submitted in previous applications may be referenced without being resubmitted. In addition, recordkeeping must be performed on an on-going basis.

4. *Who is required or asked to report:* All persons applying for or holding a license to manufacture, produce, transfer, receive, acquire, own, possess, or use radioactive byproduct material.

5. *The number of annual respondents:* 20,669 (3,869 NRC licensees and 16,800 Agreement State licensees).

6. *The number of hours needed annually to complete the requirement or request:* 283,891 (NRC licensees 52,450 hours [22,833 reporting + 29,617 recordkeeping] and Agreement State licensees 231,441 hours [100,081 reporting + 131,360 recordkeeping]).

7. *Abstract:* 10 CFR Part 30 establishes requirements that are applicable to all persons in the United States governing domestic licensing of radioactive byproduct material. The application, reporting and recordkeeping requirements are necessary to permit the NRC to make a determination whether the possession, use, and transfer of byproduct material is in conformance with the Commission's regulations for protection of the public health and safety.

Submit, by February 9, 2009, comments that address the following questions:

1. Is the proposed collection of information necessary for the NRC to properly perform its functions? Does the information have practical utility?

2. Is the burden estimate accurate?

3. Is there a way to enhance the quality, utility, and clarity of the information to be collected?

4. How can the burden of the information collection be minimized, including the use of automated collection techniques or other forms of information technology?

A copy of the draft supporting statement may be viewed free of charge at the NRC Public Document Room, One White Flint North, 11555 Rockville Pike, Room O–1 F21, Rockville, MD 20852. OMB clearance requests are available at the NRC worldwide Web site: *http://www.nrc.gov/public-involve/doc-comment/omb/index.html*. The document will be available on the NRC home page site for 60 days after the signature date of this notice. Comments submitted in writing or in electronic form will be made available for public inspection. Because your comments will not be edited to remove any identifying or contact information, the NRC cautions you against including any information in your submission that you do not want to be publicly disclosed. Comments submitted should reference Docket No. NRC–2008–0621. You may submit your comments by any of the following methods. Electronic comments: Go to *http://www.regulations.gov* and search for Docket No. NRC–2008–0621. Mail comments to NRC Clearance Officer, Gregory Trussell (T–5 F53), U.S. Nuclear Regulatory Commission, Washington, DC 20555–0001. Questions about the information collection requirements may be directed to the NRC Clearance Officer, Gregory Trussell (T–5 F53), U.S. Nuclear Regulatory Commission, Washington, DC 20555–0001, by telephone at 301–415–6445, or by e-mail to *INFOCOLLECTS.Resource@NRC.GOV*.

Dated at Rockville, Maryland, this 3rd day of December 2008.

For the Nuclear Regulatory Commission,

Gregory Trussell,

NRC Clearance Officer, Office of Information Services.

[FR Doc. E8–29186 Filed 12–9–08; 8:45 am]

BILLING CODE 7590–01–P

NUCLEAR REGULATORY COMMISSION

[Docket No. 52–033]

Detroit Edison Company Fermi Nuclear Power Plant, Unit 3 Combined License Application Notice of Intent To Prepare an Environmental Impact Statement and Conduct Scoping Process

Detroit Edison Company (Detroit Edison) has submitted an application for a combined license (COL) to build the Fermi Nuclear Power Plant, Unit #3 (Fermi 3) at its Enrico Fermi Atomic Power Plant (Fermi) site, located on approximately 1,260 acres in Monroe County, Michigan, on Lake Erie, approximately 25 miles northeast of Toledo, Ohio and 30 miles southwest of Detroit, Michigan. Detroit Edison submitted the application for the COL to the U.S. Nuclear Regulatory Commission (NRC) by letter dated September 18, 2008, pursuant to Title 10 of the *Code of Federal Regulations* (10 CFR) Part 52. A notice of receipt and availability of the application, which included an environmental report (ER), was published in the **Federal Register** on Friday, October 17, 2008 (73 FR 61916). A notice of acceptance for docketing of the application for the COL was published in the **Federal Register** on December 2, 2008, 73 FR 73350. The purposes of this notice are (1) to inform the public that the NRC will be preparing an environmental impact statement (EIS) in support of the review of the COL application, and (2) to

provide the public with an opportunity to participate in the environmental scoping process, as described in 10 CFR 51.29.

In addition, as outlined in 36 CFR 800.8(c), ''Coordination with the National Environmental Policy Act,'' the NRC staff plans to coordinate compliance with Section 106 of the National Historic Preservation Act (NHPA) with steps taken to meet the requirements of the National Environmental Policy Act of 1969, as amended (NEPA). Pursuant to 36 CFR 800.8(c), the NRC staff intends to use the process and documentation for the preparation of the EIS on the proposed action to comply with Section 106 of the NHPA in lieu of the procedures set forth on 36 CFR 800.3 through 800.6.

In accordance with 10 CFR 51.45 and 51.50, Detroit Edison submitted the ER as part of the application. The ER was prepared pursuant to 10 CFR parts 51 and 52 and is available for public inspection at the NRC Public Document Room (PDR) located at One White Flint North, 11555 Rockville Pike (first floor), Rockville, Maryland 20852, or from the Publicly Available Records component of NRC's Agencywide Documents Access and Management System (ADAMS). ADAMS is accessible at *http://www.nrc.gov/reading-rm/adams.html*, which provides access through the NRC's Electronic Reading Room link. The accession number in ADAMS for the ER included in the application is ML082730660. Persons who do not have access to ADAMS or who encounter problems in accessing the documents located in ADAMS should contact the NRC's PDR Reference staff at 1–800–397–4209/301–415–4737 or by e-mail to *pdr.resource@nrc.gov*. The application may also be viewed on the Internet at *http://www.nrc.gov/reactors/new-reactors/col/fermi.html*. In addition, the Ellis Reference & Information Center, Monroe County Libraries, located at 3700 South Custer Road, Monroe, Michigan 48161–9716 has agreed to make the ER available for public inspection.

The following key reference documents related to the application and the NRC staff's review processes are available through the NRC's Web site at *http://www.nrc.gov:*

- 10 CFR part 51, Environmental Protection Regulations for Domestic Licensing and Related Regulatory Function;
- 10 CFR part 52, Licenses, Certifications, and Approvals for Nuclear Power Plants;
- 10 CFR part 100, Reactor Site Criteria;
- NUREG–1555, Standard Review Plans for Environmental Reviews for Nuclear Power Plants;
- NUREG/BR–0298, Brochure on Nuclear Power Plant Licensing Process;
- Regulatory Guide 4.2, Preparation of Environmental Reports for Nuclear Power Stations;
- Regulatory Guide 4.7, General Site Suitability Criteria for Nuclear Power Stations;
- Fact Sheet on Nuclear Power Plant Licensing Process;
- Regulatory Guide 1.206, Combined License Applications for Nuclear Power Plants; and
- Nuclear Regulatory Commission Policy Statement on the Treatment of Environmental Justice Matters in NRC Regulatory and Licensing Actions.

The regulations, NUREG-series documents, regulatory guides, and fact sheet can be found under Document Collections in the Electronic Reading Room on the NRC webpage. The environmental justice policy statement can be found in the **Federal Register**, 69 FR 52040, August 24, 2004.

This notice advises the public that the NRC intends to gather the information necessary to prepare an EIS as part of the review of the application for a COL at the Fermi 3 site. Possible alternatives to the proposed action (issuance of the COL for Fermi 3) include no action, reasonable alternative energy sources, and alternate sites. As set forth in 10 CFR 51.20(b)(2), issuance of a full power license to operate a nuclear power reactor is an action that requires an EIS. This notice is being published in accordance with NEPA and the NRC's regulations in 10 CFR part 51.

The NRC will first conduct a scoping process for the EIS and, as soon as practicable thereafter, will prepare a draft EIS for public comment. Participation in this scoping process by members of the public and local, State, Tribal, and Federal government agencies is encouraged. The scoping process for the draft EIS will be used to accomplish the following:

a. Define the proposed action that is to be the subject of the EIS;

b. Determine the scope of the EIS and identify the significant issues to be analyzed in depth;

c. Identify and eliminate from detailed study those issues that are peripheral or that are not significant;

d. Identify any environmental assessments and other EISs that are being or will be prepared that are related to but are not part of the scope of the EIS being considered;

e. Identify other environmental review and consultation requirements related to the proposed action;

f. Identify parties consulting with the NRC under the NHPA, as set forth in 36 CFR 800.8(c)(1)(i);

g. Indicate the relationship between the timing of the preparation of the environmental analyses and the Commission's tentative planning and decision-making schedule;

h. Identify any cooperating agencies and, as appropriate, allocate assignments for preparation and schedules for completing the EIS to the NRC and any cooperating agencies; and

i. Describe how the EIS will be prepared, including any contractor assistance to be used.

The NRC invites the following entities to participate in the scoping process:

a. The applicant, Detroit Edison;

b. Any Federal agency that has jurisdiction by law or special expertise with respect to any environmental impact involved or that is authorized to develop and enforce relevant environmental standards;

c. Any affected Indian tribe;

d. Affected State and local government agencies, including those authorized to develop and enforce relevant environmental standards;

e. Any person who requests or has requested an opportunity to participate in the scoping process; and

f. Any person who intends to petition for leave to intervene in the proceeding, or who has submitted such a petition, or who is admitted as a party.

In accordance with 10 CFR 51.26, the scoping process for an EIS may include a public scoping meeting to help identify significant issues related to a proposed activity and to determine the scope of issues to be addressed in an EIS. The NRC will hold two identical public scoping meetings for the EIS regarding the Fermi 3 COL application. The scoping meetings will be held at the Monroe County Community College's La-Z-Boy Center Meyer Theater, located at 1555 South Raisinville Road, Monroe, Michigan 48161, on Wednesday, January 14, 2009. The first meeting will convene at 1 p.m. and will continue until approximately 4 p.m. The second meeting will convene at 7 p.m., with a repetition of the overview portions of the first meeting, and will continue until approximately 10 p.m. Additionally, the NRC staff will host informal discussions during an open house for one hour prior to the start of each public meeting. In the event that the La-Z-Boy Center Meyer Theater is closed due to weather conditions on January 14, 2009, the open houses and scoping meetings would be held on Thursday, January 15, 2009, during the same hours as listed above. The meetings will be transcribed and will

include the following: (1) An overview by the NRC staff of the NEPA environmental review process, the proposed scope of the EIS, and the proposed review schedule; and (2) the opportunity for interested government agencies, organizations, and individuals to submit comments or suggestions on the environmental issues or the proposed scope of the EIS. No formal comments on the proposed scope of the EIS will be accepted during the open house informal discussions. To be considered, comments must be provided either at the transcribed public meeting or in writing, as discussed below.

Persons may register to attend or present oral comments at the meeting on the scope of the NEPA review by contacting Mr. Stephen Lemont or Ms. Michelle Moser by telephone at 1–800–368–5642, extension 5163 or 6509, or by e-mail to the NRC at *Fermi3.COLEIS@nrc.gov* no later than 5 p.m. EST on January 6, 2009. Members of the public may also register to speak at the meeting prior to the start of the session. Individual oral comments may be limited by the time available, depending on the number of persons who register. Members of the public who have not registered may also have an opportunity to speak, if time permits. Public comments will be considered in the scoping process for the EIS. If special equipment or accommodations are needed to attend or present information at the public meeting, the need should be brought to Mr. Stephen Lemont's attention no later than 5 p.m. EST on December 30, 2008, so that the NRC staff can determine whether the request can be accommodated.

Members of the public may send written comments on the scope of the Fermi 3 COL EIS to the Chief, Rulemaking, Directives, and Editing Branch, Division of Administrative Services, Office of Administration, Mailstop TWB–05–B01M, U.S. Nuclear Regulatory Commission, Washington, DC 20555–0001, and should cite the publication date and page number of this **Federal Register** notice. To ensure that comments will be considered in the scoping process, written comments must be postmarked or delivered by February 9, 2009. Electronic comments may be sent by e-mail to the NRC at *Fermi3.COLEIS@nrc.gov*. Electronic submissions must be sent no later than February 9, 2009, to ensure that they will be considered in the scoping process. Comments will be made available electronically and will be accessible through the NRC's Electronic Reading Room link *http://www.nrc.gov/reading-rm/adams.html*. The NRC staff may, at its discretion, consider comments submitted after the end of the comment period.

Participation in the scoping process for the EIS does not entitle participants to become parties to the proceeding to which the EIS relates. A Notice of a hearing and opportunity to petition for leave to intervene in the proceeding on the application for a COL will be published in a future **Federal Register** notice.

At the conclusion of the scoping process, the NRC staff will prepare a concise summary of the determination and conclusions reached on the scope of the environmental review, including the significant issues identified, and will send this summary to each participant in the scoping process for whom the staff has an address. The staff will then prepare and issue for comment the draft EIS, which will be the subject of a separate **Federal Register** notice and a separate public meeting. Copies of the draft EIS will be available for public inspection at the PDR through the above-mentioned address and one copy per request will be provided free of charge. After receipt and consideration of comments on the draft EIS, the NRC will prepare a final EIS, which will also be available to the public.

Information about the proposed action, the EIS, and the scoping process may be obtained from Mr. Stephen Lemont at 301–415–5163 or by e-mail at *Stephen.Lemont@nrc.gov*.

Dated at Rockville, Maryland, this 3rd day of December 2008.

For the Nuclear Regulatory Commission.

Scott Flanders,

Director, Division of Site and Environmental Reviews, Office of New Reactors.

[FR Doc. E8–29178 Filed 12–9–08; 8:45 am]

BILLING CODE 7590–01–P

SECURITIES AND EXCHANGE COMMISSION

[Release No. 59056]

Order Granting Registration of Egan-Jones Rating Company To Add Two Additional Classes of Credit Ratings

December 4, 2008.

Egan-Jones Rating Company, a nationally recognized statistical rating organization (''NRSRO''), furnished to the Securities and Exchange Commission (''Commission'') an application under Section 15E of the Securities Exchange Act of 1934 (''Exchange Act'') to register for the two classes of credit ratings described in clauses (iv) and (v) of Section 3(a)(62)(B) of the Exchange Act. The Commission finds that the application furnished by Egan-Jones Rating Company is in the form required by Exchange Act Section 15E, Exchange Act Rule 17g–1 (17 CFR 240.17g–1), and Form NRSRO (17 CFR 249b.300).

Based on the application, the Commission finds that the requirements of Section 15E of the Exchange Act are satisfied.

Accordingly,

It Is Ordered, under paragraph (a)(2) of Section 15E of the Exchange Act, that the registration of Egan-Jones Rating Company with the Commission for the classes of credit ratings described in clauses (iv) and (v) of Section 3(a)(62)(B) of the Exchange Act is granted.

By the Commission.

Florence E. Harmon,

Acting Secretary.

[FR Doc. E8–29157 Filed 12–9–08; 8:45 am]

BILLING CODE 8011–01–P

SECURITIES AND EXCHANGE COMMISSION

[Release No. 34–59050; File No. SR–Amex–2008–70]

Self-Regulatory Organizations; American Stock Exchange LLC; Order Approving Proposed Rule Change as Modified by Amendment No. 1 Thereto, To Revise Its Initial Listing Process To Eliminate the Current Appeal Process for Initial Listing Decisions, Add a New Confidential Pre-Application Eligibility Review Process, and Upgrade Its Listing Requirements by Eliminating the Alternative Listing Standards

December 3, 2008.

I. Introduction

On September 4, 2008, the American Stock Exchange LLC (''Amex,'' or the ''Exchange'') filed with the Securities and Exchange Commission (''Commission''), pursuant to Section 19(b)(1) of the Securities Exchange Act of 1934 (''Act'') [1] and Rule 19b–4 thereunder,[2] a proposed rule change to amend the procedures for initial listing of securities on Amex. On September 17, 2008, Amex filed Amendment No. 1 to the proposed rule change. The proposed rule change was published for comment in the **Federal Register** on September 24, 2008.[3] Initially one comment was received opposing the proposed rule change.[4] NYSE Alternext

[1] 15 U.S.C. 78s(b)(1).

[2] 17 CFR 240.19b–4.

[3] *See* Securities Exchange Act Release No. 58570 (September 17, 2008), 73 FR 55185 (''Notice'').

[4] *See* letter from Brendan E. Cryan, Managing Member Brendan E. Cyran & Company, LLC, and Jonathan Q. Frey, Chief Operating Officer of J.

U.S. LLC[5] filed a response on October 22, 2008.[6] Subsequently, an additional comment letter was received in response to Alternext's letter.[7] This order approves the proposed rule change, as modified by Amendment No. 1 thereto.

II. Description of the Proposal

Sections 101(e) and 1203(c) of the Amex Company Guide currently provide that the securities of certain issuers which do not satisfy any of the Exchange's regular initial listing standards may nonetheless be eligible for initial listing on the Exchange pursuant to the Exchange's appeal procedures, which include authorization of approval of the listing by a Listing Qualifications Panel of the Exchange's Committee on Securities, if (a) the issuer satisfies one of two minimum numerical alternative listing standards, and (b) the Listing Qualifications Panel makes an affirmative finding that there are mitigating factors that warrant listing pursuant to these alternative listing standards.[8] The Exchange proposes to eliminate the two alternative listing standards.[9] In addition, to align its initial listing process with the process in place at the NYSE, the Exchange proposes to amend Sections 101 and 1201–1206 of the Amex Company Guide to eliminate the current appeal process for initial listing decisions by the Exchange. The Exchange believes that requiring listing applicants to meet the requirements of the Exchange's regular initial listing standards will strengthen and enhance its listing standards. Further, the Exchange's experience with its existing initial listing appeal process is that it has almost never been utilized, and never successfully, to appeal a staff determination on the basis that such determination was erroneous. According to Amex, the few appeals made have been by issuers seeking listing under the two aforementioned alternative listing standards (which can only be achieved through the appeal processes).

The Exchange also proposes to add a new mandatory confidential pre-application eligibility review process for companies considering an initial listing on the Exchange. Pursuant to this process, company officials seeking a listing on the Exchange would be required to undertake preliminary confidential discussions with the Exchange, prior to submitting a formal listing application, to determine whether its securities are eligible for listing approval. Only after a company has cleared the confidential pre-application eligibility review and has been authorized by the Exchange to proceed may it file an original listing application and complete the other formal steps in the original listing process pursuant to Section 202 of the Amex Company Guide.[10] The information needed for the purpose of conducting a confidential pre-application eligibility review is set forth in current Sections 210–222 of the Amex Company Guide.[11] There will be no charge to the company in connection with the confidential pre-application eligibility review.

The Exchange anticipates that the proposed new confidential pre-application eligibility review process will enable it to provide an issuer with guidance and clarification on whether or not it is eligible for listing on a more expeditious basis. The Exchange believes that the new confidential pre-application eligibility review process will provide a fair procedure, consistent with Section 6(b)(7) of the Act,[12] for all issuers seeking listing, including those that receive an adverse determination. Specifically, consistent with the Exchange's current review process, initial listing eligibility determinations must be made in accordance with the criteria specified in the Exchange's listing standards, following a rigorous staff analysis and managerial oversight. The Exchange asserts that this structured review process, based on transparent standards, mitigates against erroneous determinations.

The Exchange represents that it has considered how to transition the proposed rule change and proposes the following treatment for issuers that have applications currently in process for an initial listing on the Exchange. Any initial listing applications that are already filed and in process with the Exchange as of the date of effectiveness of this proposed rule change (''Legacy Applications'') will be treated as if they were still governed by the initial listing procedures in the Amex Company Guide as in effect immediately prior to such date of effectiveness, which effective date will be the date of approval of the rule change by the Commission. Consequently, companies with Legacy Applications would have the right to appeal the initial listing decision and to be evaluated for listing under the alternative initial listing standards that are being eliminated by this filing. To this end, the Exchange proposes the addition of a temporary Section 1212T to the Amex Company Guide. Temporary Section 1212T will contain the current initial listing provisions of the Amex Company Guide that reference the alternative listing standards and other provisions of Part 12 that are applicable to such alternative standards, which are otherwise being proposed for deletion from the Amex Company Guide. The temporary provisions of Rule 1212T will apply solely to the Legacy Applications and will otherwise be of no force or effect.

In addition to the changes discussed above, the Exchange is also proposing three other minor changes of a ''housekeeping'' nature to the text of the Amex Company Guide. Section 206, containing an outdated and non-substantive reference to listing day, would be eliminated. An outdated reference in Section 1202 to the Listing Investigations Department (which no longer exists) would be deleted under the proposed rule change. Finally, language in Section 1201(d) listing a number of non-quantitative factors that the Exchange will consider in evaluating an initial listing application would be eliminated under the proposal, because those factors (and certain others) are already set forth in Section 101.

Amex filed the proposed rule change to implement a NYSE Euronext business plan for the Amex after the consummation of the transactions contemplated by the merger agreement dated January 17, 2008 among the Exchange, the Amex Membership Corporation, NYSE Euronext and certain other entities, whereby a successor to the Exchange will become an indirect, wholly-owned subsidiary of NYSE Euronext (the ''Acquisition''). The Acquisition was completed on October

Streicher & Co. L.L.C., dated October 10, 2008 (''Specialist Letter 1'').

[5] NYSE Alternext U.S. LLC (''Alternext'') is the successor to the Amex, after being acquired by the New York Stock Exchange LLC (''NYSE'').

[6] *See* letter from Janet Kissane, Corporate Secretary, NYSE Alternext U.S. LLC, dated October 22, 2008 (''Alternext Response Letter'').

[7] *See* letter from Jonathan Q. Frey, Chief Operating Officer of J. Streicher & Co. L.L.C., dated October 30, 2008 (''Specialist Letter 2'').

[8] The issuer is also required to make an announcement through the news media that it has been approved for listing pursuant to the alternative listing standards. *See* Section 1203(c)(iii) of the Amex Company Guide.

[9] The Exchange notes that a relatively small number of companies are listed on the Exchange each year under the two alternative listing standards that are being eliminated under the proposed rule change. *See infra* note 18.

[10] The confidential pre-application eligibility review process would be comparable to the process in place at the NYSE as described in Sections 101, 104 and 701 of the NYSE Listed Company Manual.

[11] Sections 210–220 of the Amex Company Guide currently contain requirements for original listing applications. With the adoption of the pre-application eligibility review, these same criteria will be required for that process as well.

[12] 15 U.S.C. 78f(b)(7).

1, 2008, so pursuant to the implementation schedule set forth by the Exchange, the proposal will take effect upon Commission approval.[13]

III. Summary of Comments

Specialist Letter 1 objects to the Exchange's elimination of the alternative listing standards and states that, at a minimum, Amex should be required to more fully explain its concerns with the alternative standards so that the commenters and the public can adequately analyze the proposal.[14] In this regard, Specialist Letter 1 raised several issues or requests for additional clarification.[15] First, Specialist Letter 1 is skeptical of the Exchange's proposition that the elimination of the two alternative listing standards will strengthen and enhance the initial listing standards.[16] The Exchange responded that this is adequately addressed in the Notice and that the Exchange made a business determination to eliminate the alternative listing standards which impose a less stringent standard than the regular initial listing standards. The Exchange noted that elimination of the alternative listing standards will require that all companies seeking listing on the Exchange to satisfy the more stringent regular listing standards, which in the Exchange's view will strengthen and enhance its initial listing standards.[17] The Exchange further noted that in each full year since 2002, the number of companies approved for listing under the alternative listing standards was minimal and that due to these small numbers, the process was disproportionately cumbersome and resource intensive.[18] Therefore, the Exchange concludes elimination of the alternative listing standards will have a relatively minimal impact on listings on the Exchange or Exchange equity specialists.

Second, Specialist Letter 1 argues that the Exchange fails to offer any analysis or facts to support its proposal. Such analysis, Specialist Letter 1 states, will help determine whether alternatives that are less detrimental may exist. In response, the Exchange states that it is not required to demonstrate that companies listed under the alternate standards have performed worse than other listed companies, and that a decision to reasonably increase its listing standards is a business decision within its purview.

Third, Specialist Letter 1 raises the concern that the proposed rule change will have a negative impact on the companies that will not otherwise qualify for listing on the Exchange if the alternative initial listing standards are eliminated.[19] The Exchange believes that adequate trading venues, such as the Over the Counter (''OTC'') Bulletin Board exist for those companies that cannot meet the Exchange's regular initial listing standards.[20] The Exchange further notes that as these companies grow in other markets, they may later become eligible for listing under the Exchange's regular initial listing standards.

Finally, Specialist Letter 1 questions whether NYSE Euronext supports the proposed rule change.[21] The Exchange noted in the Notice that the proposed changes to the initial listing process were part of its strategic business planning in anticipation of its acquisition by NYSE Euronext and was aimed at more closely aligning its listing process with the NYSE.[22] The Response Letter confirms that NYSE supports the Exchange's proposal.[23]

Specialist Letter 2 [24] argues, among other things, that it is not consistent with Section 6 of the Act for the Exchange to simply justify its proposal as a business decision entirely within its purview. Specialist Letter 2 also states that the Exchange failed to answer questions on whether companies listed under the alternative standards performed poorly as compared to other listed companies, and that this information should be a matter of public record. The commenter argues that it is difficult to understand why the Exchange would want to reduce its ability to list companies at a time it is losing its top tier companies to NYSE which could raise questions about the ''future health and well being of the Exchange.'' [25] The commenter also reiterates its position that relegating these companies to alternate markets does not seem to be in the public interest. Finally, the commenter notes, among other things, that the Exchange still has not been able to show any harm from listing companies under the alternative standards, and that the Exchange should be required to provide facts and analysis to support a finding that elimination of the alternative standards is in the public interest.[26]

IV. Discussion and Commission Findings

After careful consideration, the Commission finds that the proposed rule change is consistent with the requirements of the Act and the rules and regulations thereunder applicable to a national securities exchange [27] and, in particular, the requirements of Section 6 of the Act.[28] Specifically, the Commission finds that the proposed rule change is consistent with Section 6(b)(5) of the Act,[29] which requires, among other things, that the rules of a national securities exchange be designed to prevent fraudulent and manipulative acts and practices, to promote just and equitable principles of trade, to foster cooperation and coordination with persons engaged in regulating, clearing, settling, processing information with respect to, and facilitating transactions in securities, to remove impediments to and perfect the mechanism of a free and open market and a national market system, and, in general, to protect investors and the public interest and are not designed to permit unfair discrimination between customers, issuers, brokers or dealers.

The Exchange proposes to eliminate the appeal procedures for initial listing decisions. The Exchange further proposes to eliminate the alternative listing standards on which almost all of such initial listing appeals are based. As a result of the proposed rule change, all companies that list on the Exchange must meet the requirements of the Exchange's regular initial listing standards which are higher than the alternative initial listing standards.[30]

The Commission has carefully considered both of the comments. The commenters argue that Amex has not justified elimination of the alternative listing standards and should be required to provide facts and analysis to support

[13] *See* Securities Exchange Act Release No. 58673 (September 29, 2008), 73 FR 58995 (October 1, 2008); *see* Notice, *supra* 3.

[14] *See* Specialist Letter 1, *supra* note 4.

[15] *See* Specialist Letter 1, *supra* note 4.

[16] *See* Specialist Letter 1, *supra* note 4, at 2.

[17] *See* Response Letter, *supra* note 5, at 1–2.

[18] Since 2003, only 16 companies were approved under the alternative standards in comparison with 455 under the regular standards.

[19] *See* Specialist Letter 1, *supra* note 4, at 2. In particular, the commenters note that elimination of the standards will result in more companies trading in less regulated, less liquid, and more expensive markets and will impact capital formation for such companies.

[20] *See* Response Letter, *supra* note 6, at 2.

[21] *See* Specialist Letter 1, *supra* note 4, at 2–3.

[22] *See* Response Letter, *supra* note 6, at 3.

[23] *Id*.

[24] Specialist Letter 2 was submitted by one of the two commenters who submitted Specialist Letter 1. *See supra* note 7.

[25] *See* Specialist Letter 2, *supra* note 7 at 2.

[26] *Id*. at 3.

[27] In approving this proposed rule change the Commission has considered the proposed rule's impact on efficiency, competition, and capital formation. 15 U.S.C. 78c(f).

[28] 15 U.S.C. 78f.

[29] 15 U.S.C. 78f(b)(5).

[30] *See* Amex Company Guide Sections 210–222 for current initial listing standards. *See also* Response Letter, *supra* note 6 at Exhibit A which contains a comparison of regular initial listing standards versus alternative listing standards.

a finding that the proposal is in the public interest. They further note that to do otherwise would accede to the Exchange's view that they are not required to show that companies listed under the alternative standards have performed more poorly than other companies and that the decision to eliminate the alternative standards is totally a business decision that is within its purview. The commenters believe this analysis ignores the requirements of Section 6 of the Act that requires proposals of the Exchange to only be approved if they are in the public interest.

After carefully considering these comments, the Commission believes that the proposal as to the elimination of the alternative listing standards is reasonable and consistent with the Act, and furthers investor protection and the public interest. In making this finding, the Commission notes at the outset that the development and enforcement of adequate standards governing the initial and continued listing of securities on an exchange is an activity of critical importance to financial markets and the investing public. Listing standards serve as a means for an exchange to screen issuers and to provide listed status only to bona fide companies that have, or in the case of an initial public offering, will have sufficient public float, investor base, and trading interest to provide the depth and liquidity necessary to promote fair and orderly markets. Adequate standards are especially important given the expectations of investors regarding exchange trading and the imprimatur of listing on a particular market.

Based on the above analysis, the Commission would find it difficult to justify denying an exchange the ability to eliminate lower listing standards under the Act, assuming the elimination of such standards are done on a fair and equitable basis, does not unfairly discriminate between issuers as required under Section 6(b)(5) of the Act, and there remain sufficient listing and regulatory requirements to ensure adequate depth and liquidity for listed companies, and the protection of investors and the public interest. Where all of these factors exist, as the Commission finds in the Amex's proposal, the Commission believes that it is within the Exchange's business judgment to determine it no longer wants to qualify for listing these types of smaller companies under its rules.[31] The Commission emphasizes that its approval of the Amex's proposal is not being based solely on the business judgment of the Exchange. While the Exchange's determination to eliminate the alternative initial listing standards may indeed be motivated by its business judgment, the Commission nevertheless believes that fact does not preclude us from finding, as we do for the reasons discussed herein, that the proposal is consistent with the requirements of the Act and Section 6(b)(5) in particular.[32]

In making this finding the Commission notes that Amex has provided for Legacy Applications so that any issuer that was currently being considered under the Amex's initial listing standards up to the date of approval of this rule filing could still avail itself of the alternative listing standards if it so qualified. This helps to ensure that issuers currently in the process of applying for initial listing on Amex would not suddenly find the alternative standards unavailable due to the approval of this rule proposal. Further, companies that initially listed on the Exchange under the alternative listing standards will remain listed and not be affected by the proposal, which is on a going forward basis. In this regard, Amex's regular initial listing and continued listing standards remain the same for all listed companies.

The Commission notes that in terms of potential harm to issuers who no longer will be able to avail themselves of the Amex alternative initial listing standards, alternative trading venues exist for these companies as noted in the Exchange's Response Letter.[33] As discussed above, existing listed companies and Legacy Applicants will not be adversely affected in any way by the Exchange's proposal. The Commission does not believe the Exchange is required to maintain lower listing standards to accommodate the potential for listings in the future, especially when alternative markets exist and all companies have an equal opportunity to apply under regular initial listing standards.

Finally, the Commission recognizes that the commenters, as specialists on the Exchange, may potentially be losing the ability to make a market in securities of companies that could have qualified for listing under the alternative standards. However, as provided in the Amex Response Letter, the majority of companies are listed on the Exchange under the regular initial listing standards, while listing under the alternative standards has only represented a small percentage of the overall listings on the Amex. For example, in 2007 of 109 new listings, 2 were under the alternative standards. Further, those companies that no longer qualify for initial listing could, as noted by Amex, apply in the future for an Amex listing after developing a trading market in an alternative market place. The Act does not dictate that Amex continue to list companies that cannot qualify under the regular listing standards because of the potential loss of business. Indeed, to require Amex to retain its alternative listing standards for that reason would, in itself, be a business decision. For all the reasons discussed above, the Commission believes that the proposal to eliminate the alternative initial listing standards is reasonable and should continue to provide only for the listing of securities with a sufficient investor base to maintain fair and orderly markets and adequately protect investors and the public interest.

The Commission also believes that the establishment of a mandatory confidential pre-application review is reasonable and consistent with the Act.[34] The Commission notes that the new confidential pre-application eligibility review criteria are set forth in the Amex Company Guide.[35] The pre-application review process will enable the Exchange to obtain information from companies seeking a listing and provide the issuer with guidance and clarification on whether or not it is eligible for listing. The proposal should therefore make the listing process more efficient for both the Exchange and potential listed companies. Accordingly, the Commission believes that the

[31] The Commission notes that under the Exchange's rules, the approval of an application for listing of securities is a matter solely within the discretion of the Exchange. Further, the Commission notes that the rule permits the Exchange to deny listing even if the company meets the listing standards. *See* Amex Company Guide Section 101.

[32] *See also* Securities Exchange Act Release No. 56606 (October 3, 2007), 72 FR 57982 (October 11, 2007) (approving proposed rule change by NYSE Arca, Inc. to amend initial listing standards that would have the effect of excluding from qualification some companies that previously qualified for initial listing).

[33] While the commenters argue that such alternative markets will provide less protection for shareholders, the Commission need not make a qualitative judgment about such markets to address this concern. Rather, the Commission believes that it is sufficient to determine that given the importance of listing standards and the expectations of investors in terms of the types of companies listed on a national securities exchange as discussed above, it will further the public interest by eliminating the Exchange's lower listing standards and requiring all listed companies to meet the existing higher regular initial listing standards.

[34] The NYSE currently has a similar process in place; *see* Sections 101, 104 and 701 of the NYSE Listed Company Manual.

[35] *See* proposed Section 201 of the Amex Company Guide.

changes adequately protect investors and the public interest.

Finally, the Commission notes that the elimination of the outdated and redundant provisions is consistent with the Act and should make the Company Manuel easier and clearer to use.

V. Conclusion

On the basis of the foregoing, the Commission finds that the proposed rule change, as amended, is consistent with the requirements of the Act and in particular Section 6 of the Act and the rules and regulations thereunder.

It is therefore ordered, pursuant to Section 19(b)(2) of the Act, that the proposed rule change, as amended (File No. SR–Amex–2008–70) is approved.

For the Commission, by the Division of Trading and Markets, pursuant to delegated authority.[36]

Florence E. Harmon,

Acting Secretary.

[FR Doc. E8–29154 Filed 12–9–08; 8:45 am]

BILLING CODE 8011–01–P

[36] 17 CFR 200.30–3(a)(12).

SECURITIES AND EXCHANGE COMMISSION

[Release No. 34–59055; File Nos. SR–Amex–2008–68; SR–BSE–2008–51; SR–CBOE–2008–72; SR–ISE–2008–58; SR–NYSEArca–2008–66; and SR–Phlx–2008–58]

Self-Regulatory Organizations; American Stock Exchange LLC, Boston Stock Exchange, Inc., Chicago Board Options Exchange, Incorporated, International Securities Exchange, LLC, NYSE Arca, Inc., and Philadelphia Stock Exchange, Inc.; Notice of Filing and Order Granting Accelerated Approval of Proposed Rule Changes Relating to the Listing and Trading Options on Shares of the iShares COMEX Gold Trust and the iShares Silver Trust

December 4, 2008.

Six options exchanges filed with the Securities and Exchange Commission (''Commission'') proposed rule changes pursuant to Section 19(b)(1) of the Securities Exchange Act of 1934 (''Act'')[1] and Rule 19b–4[2] thereunder to list and trade options on shares of the iShares COMEX Gold Trust and the iShares Silver Trust (''iShares Trust Options''). Specifically, NYSE Arca, Inc. (''NYSE Arca'') submitted its proposal on June 24, 2008; the Chicago Board Options Exchange, Incorporated (''CBOE'') submitted its proposal on July 3, 2008; the International Securities Exchange, LLC (''ISE'') submitted its proposal on July 14, 2008; the Philadelphia Stock Exchange, Inc. (''Phlx'') submitted its proposal on July 23, 2008; the American Stock Exchange LLC (''Amex'')[3] submitted its proposal on August 20, 2008; and the Boston Stock Exchange, Inc. (''BSE'') submitted its proposal on November 12, 2008. The proposals (collectively, the ''Proposals'') submitted by the Amex, BSE, CBOE, ISE, NYSE Arca, and Phlx (collectively, the ''Exchanges'') are substantively identical. The Commission is publishing this notice to solicit comments on the Proposals from interested persons and is approving the Proposals on an accelerated basis.

[1] 15 U.S.C. 78s(b)(1).

[2] 17 CFR 240.19b–4.

I. Self-Regulatory Organization's Statement of the Terms of Substance of the Proposed Rule Change

The Exchanges each propose to amend certain of their respective rules to enable the listing and trading of iShares Trust Options on their markets. The text of the Proposals is available at each of the respective Exchanges, the Commission's Public Reference Room, and *http://www.amex.com*, *http://www.bostonoptions.com*, *http://www.cboe.com*, *http://www.iseoptions.com*, *http://www.nysearca.com*, and *http://www.phlx.com*.

II. Self-Regulatory Organization's Statement of the Purpose of, and Statutory Basis for, the Proposed Rule Change

In their filings with the Commission, the Exchanges included statements concerning the purpose of, and basis for, the Proposals. The text of these statements may be examined at the places specified in Item III below. The Exchanges have prepared summaries, set forth in Sections A, B, and C below, of the most significant aspects of such statements.

A. Self-Regulatory Organizations' Statement of the Purpose of, and Statutory Basis for, the Proposed Rule Change

1. Purpose

Recently, the Commission approved the Exchanges' proposals to list and trade options on the SPDR Gold Trust.[4] Now, the Exchanges propose to list and trade iShares Trust Options.

Currently, the rules of the Exchanges permit only certain ''Units'' (also referred to herein as exchange traded funds (''ETFs'')) to underlie options traded on their markets.[5] Specifically, to be eligible as an underlying security for options traded on the Exchanges, an ETF must represent: (i) Interests in registered investment companies (or series thereof) organized as open-end management investment companies, unit investment trusts or similar entities that hold portfolios of securities, and/or financial instruments including, but not limited to, stock index futures contracts, options on futures, options on securities and indexes, equity caps, collars and floors, swap agreements, forward contracts, repurchase agreements and reverse purchase agreements (''Financial Instruments''), and money market instruments, including, but not limited to, U.S. government securities and repurchase agreements (''Money Market Instruments'') comprising or otherwise based on or representing investments in indexes or portfolios of securities and/or Financial Instruments and Money Market Instruments (or that hold securities in one or more other registered investment companies that themselves hold such portfolios of securities and/or Financial Instruments and Money Market Instruments); or (ii) interests in a trust or similar entity that holds a specified non-U.S. currency deposited with the trust or similar entity when aggregated in some specified minimum number may be surrendered to the trust by the beneficial owner to receive the specified non-U.S. currency and pays the beneficial owner interest and other distributions on deposited non-U.S. currency, if any, declared and paid by the trust; or (iii) commodity pool interests principally engaged, directly or indirectly, in holding and/or managing portfolios or baskets of securities, commodity futures contracts, options on commodity futures contracts, swaps, forward contracts and/or options on physical commodities and/or non-U.S. currency; or (iv) are shares of the SPDR Gold Trust. The Proposals would expand the types of ETFs that may be

[3] On September 29, 2008, the Commission approved the merger of The Amex Membership Corporation, Amex's parent, with NYSE Euronext. *See* Securities Exchange Act Release No. 58673 (September 29, 2008), 73 FR 57707 (October 3, 2008) (SR–NYSE–2008–60 and SR–Amex–2008–62) (approving the merger). As a result, Amex was renamed NYSE Alternext US LLC. For the purposes of this order, the Commission will still refer to Amex.

[4] *See* Securities Exchange Act Release Nos. 57894 (May 30, 2008), 73 FR 32061 (June 5, 2008) (SR–Amex–2008–15; SR–CBOE–2005–11; SR–ISE–2008–12; SR–NYSEArca–2008–52; and SR–Phlx–2008–17); 58136 (July 10, 2008), 73 FR 40884 (July 16, 2008) (SR–BSE–2008–41) (''SPDR Gold Trust Options Approval Orders'').

[5] *See* Amex Rule 915 Commentary .06 and .10; Boston Options Exchange (''BOX'') Rules, Chapter IV, Section 3(i); Interpretation and Policy .06 to CBOE Rule 5.3; ISE Rule 5.2(h); NYSE Arca Rule 5.3(g); and Phlx Rule 1009 Commentary .06.

approved for options trading on the Exchanges to include shares of the iShares COMEX Gold Trust and the iShares Silver Trust.

Apart from allowing iShares Trust Options to be traded on the Exchanges as described above, the Exchanges' listing standards would remain unchanged. ETFs on which options may be listed and traded would still have to be listed and traded on a national securities exchange and satisfy the other listing standards set forth in the respective rules of each of the Exchanges.[6]

Specifically, all ETFs underlying options would also continue to be required to: (1) Meet the criteria and guidelines under the Exchanges' rules for underlying ETFs; or (2) be available for creation or redemption each business day from or through the issuer in cash or in kind at a price related to net asset value, and the issuer must be obligated to issue Units in a specified aggregate number even if some or all of the investment assets required to be deposited have not been received by the issuer, subject to the condition that the person obligated to deposit the investments has undertaken to deliver the investment assets as soon as possible and such undertaking is secured by the delivery and maintenance of collateral consisting of cash or cash equivalents satisfactory to the issuer, as provided in the respective prospectus.[7]

The Exchanges each propose that the current continued listing standards for options on ETFs would apply to iShares Trust Options. Specifically, options on Units may be subject to the suspension of opening transactions as follows: (1) Following the initial twelve-month period beginning upon the commencement of trading of the Units, there are fewer than 50 record and/or beneficial holders of the Units for 30 or more consecutive trading days; (2) the value of the index or portfolio of securities, non-U.S. currency, or portfolio of commodities including commodity futures contracts, options on commodity futures contracts, swaps, forward contracts and/or options on physical commodities and/or Financial Instruments and Money Market Instruments on which Units are based is no longer calculated or available; or (3) such other event occurs or condition exists that in the opinion of the exchanges makes further dealing on the exchange inadvisable.[8]

In addition, shares of the iShares COMEX Gold Trust and the iShares Silver Trust would not be deemed to meet the requirements for continued approval, and the Exchanges would not open for trading any additional series of option contracts of the class covering shares of the iShares COMEX Gold Trust and the iShares Silver Trust, if the shares cease to be an ''NMS stock'' as provided for in rules of the Exchanges[9] or are halted from trading on their primary market.

The Exchanges each represent that the addition of the iShares COMEX Gold Trust and the iShares Silver Trust to types of Units that may underlie listed options traded on the respective exchange would not have any effect on the rules pertaining to position and exercise limits[10] or margin.[11]

The Exchanges also represent that the respective surveillance procedures applicable to iShares Trust Options would be similar to those applicable to all other options on ETFs currently traded on the Exchanges. In addition, the Exchanges note that they may obtain information from the New York Mercantile Exchange, Inc. (''NYMEX'') through the Intermarket Surveillance Group (''ISG'') related to any financial instrument traded there that is based, in whole or in part, upon an interest in, or performance of, gold or silver.

2. Statutory Basis

The Exchanges each state that amending its rules to accommodate the listing and trading of iShares Trust Options will benefit investors by providing them with valuable risk management tools. Accordingly, the Exchanges believe that the proposed rule changes are consistent with the requirements of Section 6(b) of the Act[12] in general, and further the objectives of Section 6(b)(5)[13] of the Act in particular, in that they are designed to promote just and equitable principles of trade, to remove impediments to, and perfect the mechanism of, a free and open market and a national market system, and in general to protect investors and the public interest.

B. Self-Regulatory Organization's Statement on Burden on Competition

The Exchanges each believe that the proposed rule changes will not impose any burden on competition that is not necessary or appropriate in furtherance of the purposes of the Act.

C. Self-Regulatory Organization's Statement on Comments on the Proposed Rule Change Received From Members, Participants or Others

The Exchanges each state that no written comments were solicited or received with respect to the proposed rule changes.

III. Solicitation of Comments

Interested persons are invited to submit written data, views, and arguments concerning the foregoing, including whether the proposed rule changes are consistent with the Act. Comments may be submitted by any of the following methods:

Electronic Comments

- Use the Commission's Internet comment form (*http://www.sec.gov/rules/sro.shtml*); or
- Send an e-mail to *rule-comments@sec.gov*. Please include File Nos. SR–Amex–2008–68; SR–BSE–2008–51; SR–CBOE–2008–72; SR–ISE–2008–58; SR–NYSEArca–2008–66; and SR–Phlx–2008–58 on the subject line.

Paper Comments

- Send paper comments in triplicate to Secretary, Securities and Exchange Commission, 100 F Street, NE., Washington, DC 20549–1090.

All submissions should refer to File Numbers SR–Amex–2008–68; SR–BSE–2008–51; SR–CBOE–2008–72; SR–ISE–2008–58; SR–NYSEArca–2008–66; and SR–Phlx–2008–58. This file number should be included on the subject line if e-mail is used. To help the Commission process and review your comments more efficiently, please use only one method. The Commission will post all comments on the Commission's Internet Web site (*http://www.sec.gov/rules/sro.shtml*). Copies of the submission, all subsequent amendments, all written statements with respect to the proposed rule change that are filed with the Commission, and all written communications relating to the proposed rule change between the Commission and any person, other than those that may be withheld from the

[6] *Id.*

[7] *See* Amex Rule 915 Commentary .06 and .10; BOX Rule Chapter IV, Section 3(i)(A)–(B); Interpretation and Policy .01 and .06 to CBOE Rule 5.3; ISE Rule 502(h)(A)–(B); NYSE Arca Rule 5.3(g)(1)(A)–(B); and Phlx Rule 1009 Commentary .06.

[8] *See* Amex Rule 916 Commentary .07 and .11; BOX Rule Chapter IV, Section 3(i); Interpretation and Policy .08 to CBOE Rule 5.4; ISE Rule 503(h); NYSE Arca Rule 5.4(k); and Phlx Rule 1010 Commentary .08.

[9] *See* Amex Rule 916 Commentary .07 and .11; BOX Rule Chapter IV, Section 3(i); Interpretation and Policy .01 to CBOE Rule 5.4; ISE Rule 503(h); NYSE Arca Rule 5.4(b); and Phlx Rule 1010.

[10] *See* Amex Rules 904 and 905; BOX Rules Chapter III, Sections 7 and 9; CBOE Rules 4.11 and 4.12; ISE Rules 412 and 414; NYSE Arca Rules 6.8 and 6.9; and Phlx Rules 1001 and 1002.

[11] *See* Amex Rule 462; BOX Rules Chapter XIII, Sections 3; CBOE Rule 12.3; ISE Rule 1202; NYSE Arca Rules 4.15 and 4.16; and Phlx Rule 722.

[12] 15 U.S.C. 78f(b).

[13] 15 U.S.C. 78f(b)(5).

public in accordance with the provisions of 5 U.S.C. 552, will be available for inspection and copying in the Commission's Public Reference Room, 100 F Street, NE., Washington, DC 20549, on official business days between the hours of 10 a.m. and 3 p.m. Copies of such filing also will be available for inspection and copying at the principal office of the Exchange. All comments received will be posted without change; the Commission does not edit personal identifying information from submissions. You should submit only information that you wish to make available publicly. All submissions should refer to File Numbers SR–Amex–2008–68; SR–BSE–2008–51; SR–CBOE–2008–72; SR–ISE–2008–58; SR–NYSEArca–2008–66; and SR–Phlx–2008–58 and should be submitted on or before December 31, 2008.

IV. Commission's Findings and Order Granting Accelerated Approval of the Proposed Rule Change

After careful consideration, the Commission finds that the Proposals are consistent with the requirements of the Act and the rules and regulations thereunder applicable to national securities exchanges [14] and, in particular, the requirements of Section 6 of the Act.[15] Specifically, the Commission finds that the Proposals are consistent with Section 6(b)(5) of the Act,[16] which requires, among other things, that the rules of a national securities exchange be designed to remove impediments to and perfect the mechanism of a free and open market and a national market system and, in general, to protect investors and the public interest. In accordance with the Memorandum of Understanding entered into between the Commodity Futures Trading Commission (''CFTC'') and the Commission on March 11, 2008, and in particular the addendum thereto concerning Principles Governing the Review of Novel Derivative Products, the Commission believes that novel derivative products that implicate areas of overlapping regulatory concern should be permitted to trade in either or both a CFTC- or Commission-regulated environment, in a manner consistent with laws and regulations (including the appropriate use of all available exemptive and interpretive authority).

As national securities exchanges, each of the Exchanges is required under Section 6(b)(1) of the Act [17] to enforce compliance by its members, and persons associated with its members, with the provisions of the Act, Commission rules and regulations thereunder, and its own rules. In addition, brokers that trade iShares Trust Options will also be subject to best execution obligations and FINRA rules.[18] Applicable rules of the Exchanges also require that customers receive appropriate disclosure before trading iShares Trust Options.[19] Further, brokers opening accounts and recommending options transactions must comply with relevant customer suitability standards.[20]

iShares Trust Options will trade as options under the trading rules of each of the Exchanges. These rules, among other things, are designed to avoid trading through better displayed prices for iShares Trust Options available on other exchanges and, thereby, satisfy each exchange's obligation under the Options Intermarket Linkage Plan.[21] Series of the iShares Trust Options will be subject to the Exchanges' rules regarding continued listing requirements, including standards applicable to the underlying iShares COMEX Gold Trust and the iShares Silver Trust. Shares of the iShares COMEX Gold Trust and the iShares Silver Trust must continue to be traded through a national securities exchange or through the facilities of a national securities association, and must be ''NMS stock'' as defined under Rule 600 of Regulation NMS.[22] In addition, the underlying shares must continue to be available for creation or redemption each business day from or through the issuer in cash or in kind at a price related to net asset value.[23] If shares of the iShares COMEX Gold Trust and the iShares Silver Trust fail to meet these requirements, the Exchanges will not open for trading any new series of iShares Trust Options.

The Exchanges have all represented that they have surveillance programs in place for the listing and trading of options based on the iShares COMEX Gold Trust and the iShares Silver Trust. For example, the Exchanges may obtain trading information via the ISG from the NYMEX related to any financial instrument traded there that is based, in whole or in part, upon an interest in, or performance of, gold or silver. Additionally, the listing and trading of iShares Trust Options will be subject to the Exchanges' rules pertaining to position and exercise limits [24] and margin.[25]

In addition, the Commission finds good cause, pursuant to Section 19(b)(2) of the Act,[26] for approving the Proposals prior to the thirtieth day after the date of publication of notice in the **Federal Register**. The Proposals are similar to proposals previously approved by the Commission to list and trade options on shares of the SPDR Gold Trust.[27] Therefore, the Commission does not believe that the Proposals raise any new regulatory issues. Accordingly, the Commission finds that there is good cause, consistent with Section 6(b)(5) of the Act,[28] to approve the Proposals on an accelerated basis.

V. Conclusion

It is therefore ordered, pursuant to Section 19(b)(2) of the Act,[29] that the Proposals (SR–Amex–2008–68; SR–BSE–2008–51; SR–CBOE–2008–72; SR–ISE–2008–58; SR–NYSEArca–2008–66; and SR–Phlx–2008–58) are hereby approved on an accelerated basis.

For the Commission by the Division of Trading and Markets, pursuant to delegated authority.[30]

Jill M. Peterson,

Assistant Secretary.

[FR Doc. E8–29200 Filed 12–9–08; 8:45 am]

BILLING CODE 8011–01–P

[14] In approving this proposed rule change, the Commission has considered the proposed rule's impact on efficiency, competition, and capital formation. 15 U.S.C. 78c(f).

[15] 15 U.S.C. 78f.

[16] 15 U.S.C. 78f(b)(5).

[17] 15 U.S.C. 78f(b)(1).

[18] *See* FINRA Rule 2320.

[19] *See* Amex Rule 926; BOX Rules Chapter XI, Section 17; CBOE Rule 9.15; ISE Rule 616; NYSE Arca Rule 9.18(g); and Phlx Rule 1029.

[20] *See* FINRA Rules 2860, 2860–2 and 2310; Amex Rule 923; BOX Rules Chapter XI, Section 11; CBOE Rules 9.7 and 9.9; ISE Rules 608 and 610; NYSE Arca Rule 918(b)–(c); and Phlx Rules 1024 and 1026.

[21] *See* Amex Rule 942; BOX Rules Chapter XII, Section 3; CBOE Rule 6.83; ISE Rule 1902; NYSE Arca Rule 6.94; and Phlx Rule 1085. Specifically, each of the exchanges is a participant in the Options Intermarket Linkage Plan.

[22] 17 CFR 242.600.

[23] *See* Amex Rule 915 Commentary .06 and .10; BOX Rules Chapter IV, Section 3(i); Interpretation and Policy .06 to CBOE Rule 5.3; ISE Rule 502(a)–(b); NYSE Arca Rule 5.3(a)–(b); and Phlx Rule 1009 Commentary .06.

[24] *See* Amex Rules 904 and 905; BOX Rules Chapter III, Sections 7 and 9; CBOE Rules 4.11 and 4.12; ISE Rules 412 and 414; NYSE Arca Rules 6.8 and 6.9; and Phlx Rules 1001 and 1002.

[25] *See* Amex Rule 462; BOX Rules Chapter XIII, Section 3; CBOE Rule 12.3; ISE Rule 1202; NYSE Arca Rules 4.15 and 4.16; and Phlx Rule 722. *See also* FINRA Rules 2860 and 2860–1.

[26] 15 U.S.C. 78s(b)(2).

[27] *See* SPDR Gold Trust Options Approval Orders, *supra* note 4.

[28] 15 U.S.C. 78s(b)(5).

[29] 15 U.S.C. 78s(b)(2).

[30] 17 CFR 200.30–3(a)(12).

SECURITIES AND EXCHANGE COMMISSION

[Release No. 34–59045; File No. SR–NYSEALTR–2008–09]

Self-Regulatory Organizations; Notice of Filing and Immediate Effectiveness of Proposed Rule Change by NYSE Alternext U.S. LLC To Adopt a Price List for Equity Transactions after the Relocation of NYSE Alternext Equities Trading and To Establish Certain Other Fees

December 3, 2008.

Pursuant to Section 19(b)(1) of the Securities Exchange Act of 1934 (the ''Act'')[1] and Rule 19b–4 thereunder,[2] notice is hereby given that, on November 28, 2008, NYSE Alternext U.S. LLC (the ''Exchange'' or ''NYSE Alternext'') filed with the Securities and Exchange Commission (the ''Commission'') the proposed rule change as described in Items I, II, and III below, which Items have been prepared by the Exchange. The Commission is publishing this notice to solicit comments on the proposed rule change from interested persons.

I. Self-Regulatory Organization's Statement of the Terms of Substance of the Proposed Rule Change

The Exchange proposes to adopt a new equities pricing schedule applicable to NYSE Alternext members after the relocation of all equities trading currently conducted on or through the American Stock Exchange legacy trading systems and facilities located at 86 Trinity Place, New York, New York, to the NYSE trading facilities and systems located at 11 Wall Street, New York, New York (the ''NYSE Alternext Trading Systems''), which will be operated by the NYSE on behalf of NYSE Alternext (the ''Equities Relocation'') and to make changes to the NYSE Alternext U.S. Price List to reflect the fact that it will relate only to options trading after the Equities Relocation (to be renamed the ''NYSE Alternext Options Price List''). The text of the proposed rule change is available on the Exchange's Web site (*http://www.amex.com*), at the Exchange's Office of the Secretary, and at the Commission's Public Reference Room.

II. Self-Regulatory Organization's Statement of the Purpose of, and Statutory Basis for, the Proposed Rule Change

In its filing with the Commission, the self-regulatory organization included statements concerning the purpose of and basis for the proposed rule change and discussed any comments it received on the proposed rule change. The text of these statements may be examined at the places specified in Item IV below. NYSE Alternext has prepared summaries, set forth in Sections A, B and C below, of the most significant aspects of such statements.

A. Self-Regulatory Organization's Statement of the Purpose of, and Statutory Basis for, the Proposed Rule Change

1. Purpose

NYSE Alternext proposes to adopt a new pricing schedule (the ''NYSE Alternext Equities Price List'') applicable to Exchange members engaging in equities transactions after the Equities Relocation and to make changes to the NYSE Alternext U.S. Price List to reflect the fact that it will relate only to options trading after the Equities Relocation and will be renamed the NYSE Alternext Options Price List.

While the specific amounts of the transaction fees and credits are different on the proposed NYSE Alternext Equities Price List from those on the NYSE price list, the proposed NYSE Alternext Equities Price List has been structured so as to be generally similar to the NYSE Price List. This is particularly appropriate because member organizations of NYSE Alternext that trade equities after the Equities Relocation and NYSE member organizations will all become member organizations of both exchanges at the time of the Equities Relocation. This dual membership structure will allow all member organizations to trade on both exchanges and makes it desirable to harmonize the pricing structures of the two exchanges as much as possible.

Equity Transaction Fees

Member organizations other than Designated Market Makers (''DMMs'') will be subject to the following schedule of fees and rebates with respect to transactions in equity securities[3] with a trading price of $1.00 or more:

Equity per Share Credit—per transaction—when adding liquidity	$0.0015.
Agency cross trades (i.e., a trade where a Member Organization has customer orders to buy and sell an equivalent amount of the same security) of 10,000 shares or more.	No Charge.
Non-electronic agency transactions of 10,000 shares or more between floor brokers in the crowd.	No Charge.
At the opening or at the opening only orders	No Charge.
Equity per Share Charge—per transaction (charged to both sides)—for all odd lot transactions (including the odd lot portions of partial round lots).	$0.0010.
Equity per Share charge—market at-the-close and limit at-the-close orders	$0.0005.
Equity per Share Charge—Agency cross trades of less than 10,000 shares	$0.0005.
Equity per Share Charge for all other transactions (i.e., when taking liquidity from the Exchange)—per transaction.	$0.0025.
Routing Fee[4]—per share (except floor brokers)	$0.0030.
Routing Fee—per share (floor brokers)	$0.0029.

Member organizations other than DMMs will be subject to the following schedule of fees and rebates with respect to transactions in equity securities with a trading price less than $1.00:

Equity per Share Charge when adding liquidity to the Exchange	No Charge.
Equity per Share Charge when taking liquidity from the Exchange—per transaction.	0.25% of total dollar value of the transaction.

[1] 15 U.S.C. 78s(b)(1).

[2] 17 CFR 240.19b–4.

[3] Equity transaction fees apply to transactions in rights, warrants and closed end funds.

[4] All routing fees set forth in the NYSE Alternext Equities Price List apply to all orders routed from NYSE Alternext and executed in another market. Routing Fees are in lieu of NYSE Alternext transaction charges.

Equity per Share Charge—Market at the Close and Limit at the Close Orders	The lesser of (i) $0.0005 per share, and (ii) 0.25% of the total dollar value of the transaction.
Equity per Share Charge—per transaction (charged to both sides)—for all odd lot transactions (including the odd lot portions of partial round lots).	The lesser of (i) $0.0010 per share, and (ii) 0.25% of the total dollar value of the transaction.
Routing Fee—per share	0.3% of the total dollar value of the transaction.

DMMs will be subject to the following schedule of fees and rebates with respect to transactions in equity securities with a trading price of $1.00 or more:

Equity per Share Charge when taking liquidity from the Exchange	$0.0015.
Equity per Share Credit[5] when adding liquidity to the Exchange	$0.0035.
Executions at the opening	No Charge.
Equity per Share Credit—per transaction—for all odd lot transactions (including the odd lot portions of partial round lots).	$0.0005.
Equity per Share Credit for executions at the close	$0.0005.
Routing Fee—per Share Charge	$0.0030.

DMMs will be subject to the following schedule of fees and rebates with respect to transactions in equity securities with a trading price less than $1.00:

Equity per Share Charge when taking liquidity from the Exchange	No Charge.
Equity per Share Credit when adding liquidity to the Exchange	0.15% of the total dollar value of the transaction.
Routing Fee—per Share Charge	0.3% of the total dollar value of the transaction.

Each DMM will receive all of the market data quote revenue (the ''Quoting Share'') received by the Exchange from the Consolidated Tape Association under the Revenue Allocation Formula of Regulation NMS with respect to any security (with a trading price either above or below $1.00) in any month in which the DMM meets the quoting requirement of Rule 104(a)(1)(A) for that specific security. However the DMM quoting requirement for securities trading below $1.00 will not come into effect until after the first two months of operation.

Crossing sessions. There will be no fees with respect to transactions in Crossing Session I (single stocks) or Crossing Session II (portfolios).

NYSE Alternext Bonds System

Transactions on the NYSE Alternext Bonds System will be subject to the following fee schedule:

Exchange-Sponsored Graphic User Interface ''GUI''	$5,000.00 per year.
Execution Fee per bond for orders that take liquidity from the NYSE Alternext Bonds Book (effective through December 31, 2008):	
Orders of one to ten (10) bonds	$0.50 per bond.
Orders of eleven (11) to twenty-five (25) bonds	$0.20 per bond.
Orders of twenty-six (26) bonds or more	$0.10 per bond.

Transaction fees on bond transactions are subject to a $100.00 maximum fee per transaction (through December 31, 2008).

Floor Fees

As NYSE Alternext equities trading will take place in the NYSE trading facilities after the Equities Relocation, NYSE Alternext member organizations conducting an equities trading business will pay the same fees as NYSE member organizations in relation to their employees working on the trading floor and equipment used on the trading floor. The applicable charges are as follows:

Clerk Badge Fee:	
Annual Fee per Clerk	$1,000.00.
Radio Paging Service:	
Base charge (unit and first channel)	$408.50.
Each additional channel	$139.75.
Financial Vendor Services:	
Administrative Fee Per ITPN User[6]	$480.00.
Various Products	Direct Pass Through.[7]
Member Telephone Service:	
Toll call amount billed by Verizon plus a per call surcharge on:	
Toll calls $0.69 and below	$0.16.
Toll calls greater than $0.69	$0.26.
Cellular Phones:	

[5] Rebates will be applied when (i) Posting displayed and non-displayed orders on Display Book, including s-quote and s-quote reserve orders; (ii) when providing liquidity on non-displayed interest using the Capital Commitment Schedule; or, prior to the implementation of the Capital Commitment Schedule, using the following message activities: Price improvement, size improvement (PRIN FILL), matching away market quotes; (iii) when executing trades in the crowd and at Liquidity Replenishment Points; and (iv) when providing liquidity on market-at-the-close and limit-at-the-close transactions. Rebates will not apply to executions at the open.

Phone and Headset	No Charge.
Ongoing Maintenance—per phone	$240.00.[8]
Booth Telephone System:	
Annual Telephone Line Charge	$400.00 per phone number.
Single line phone, jack, and data jack	$129.00.
Service Charges [9]:	
Install single jack (voice or data)	$161.25.
Relocate jack	$107.50.
Remove jack	$53.75.
Install voice or data line	$107.50.
Disconnect data line	$53.75.
Change phone line subscriber	$53.75.
Miscellaneous telephone charges [10]	
Broker Subscriber Service:	
e-Broker Hand Held Device (annual charge per handheld device)	$5,000.00.
System Processing Fees	
Online Comparison System (OCS):	
Transaction Fees:	
Next Day Submission (Adds or Adjustments) and Questioned Trade:	
Charge—per submission or questioned trade	$0.50.
Step Out Charge (Adds or Adjustments)—per transaction	$0.25.
Transactions submitted to the Exchange for trade date comparison (Adds)—per submission.	$0.10.
Merged Order Report:	
Charge per copy (other than first copy):	
Machine Readable Output and Print Image Transmission	$3.00 per 1,000 records.
Hard Copy	$4.50 per 1,000 lines.

Other Changes

The sections of the NYSE Alternext U.S. Price List in place prior to the Equities Relocation that set forth the Network B market data fees and the equity listing fees are included in the proposed NYSE Alternext Equities Price List. No changes are being made to any of these fees in this filing. Pricing for Exchange publications, including copies of the Exchange's Rule Book and Company Guide, will be included in both the equities and options price lists going forward.

Options Price List

The NYSE Alternext U.S. Price List in effect prior to the Equities Relocation is being renamed the NYSE Alternext Options Price List. All pricing information relating to the trading of securities other than options is being deleted and either (i) moved to the NYSE Alternext Equities Price List or replaced with new fees as discussed above or (ii) eliminated as no longer relevant.[11]

Regulatory Fees

NYSE Alternext Equities Rule 2 provides that, at the time of the Equities Relocation, all NYSE member organizations will automatically become NYSE Alternext member organizations. By acquiring NYSE Alternext membership, the NYSE member organizations that were not previously NYSE Alternext members would become subject to the NYSE Alternext registration fees for all of their employees who serve as registered representatives. As these NYSE member organizations that have no NYSE Alternext business prior to the Equities Relocation will become NYSE Alternext members without any action on their own part, NYSE Alternext will waive the application of its registered representative fees to those firms for the month of December. NYSE Alternext expects to submit a filing to adopt a revised registered representative fee commencing January 1, 2009.

2. Statutory Basis

The Exchange believes that the proposed rule change is consistent with the provisions of Section 6 [12] of the Act in particular, in that it is designed to provide for the equitable allocation of reasonable dues, fees and other charges among its members and other persons using its facilities. The Exchange believes that the proposal does not constitute an inequitable allocation of dues, fees and other charges as the same fees will be charged to all member organizations.

B. Self-Regulatory Organization's Statement on Burden on Competition

The Exchange does not believe that the proposed rule change will impose any burden on competition that is not necessary or appropriate in furtherance of the purposes of the Act.

C. Self-Regulatory Organization's Statement on Comments on the Proposed Rule Change Received From Members, Participants or Others

The Exchange has neither solicited nor received written comments on the proposed rule change.

III. Date of Effectiveness of the Proposed Rule Change and Timing for Commission Action

The foregoing rule change is effective upon filing pursuant to Section 19(b)(3)(A) [13] of the Act and Rule 19b–4(f)(2) [14] thereunder.

At any time within 60 days of the filing of the proposed rule change, the Commission may summarily abrogate such rule change if it appears to the Commission that such action is necessary or appropriate in the public interest, for the protection of investors, or otherwise in furtherance of the purposes of the Act.

[6] ITPN ''User'' is a member or person associated with a member, who has been entitled to receive one or more third party market data vendor service offerings via the Exchange's Integrated Technology Program Network.

[7] Plus appropriate sales tax where applicable.

[8] Plus sales tax.

[9] The Exchange will make all efforts to perform services during hours covered by the maintenance contract; however, tasks performed during overtime hours will be billed at a rate of 25% above the normal service charge.

[10] To be billed at $106 per hour in 15 minute increments.

[11] Pricing for Exchange Traded Fund and Exchange Traded Notes is eliminated because those securities will not be traded on the Exchange after the Relocation. Similarly, the Exchange will not facilitate UTP trading after the Relocation, so the pricing for the New UTP Trading Platform is no longer relevant. Consistent with the NYSE Price List, the NYSE Alternext U.S. Equities Price List will not make reference to Section 31 fees collected by the Exchange for payment to the Commission.

[12] 15 U.S.C. 78f.

[13] 15 U.S.C. 78s(b)(3)(A).

[14] 17 CFR 240.19b–4(f)(2).

IV. Solicitation of Comments

Interested persons are invited to submit written data, views, and arguments concerning the foregoing, including whether the proposed rule change is consistent with the Act. Comments may be submitted by any of the following methods:

Electronic Comments

- Use the Commission's Internet comment form (*http://www.sec.gov/rules/sro.shtml*); or
- Send an e-mail to *rule-comments@sec.gov*. Please include File Number SR–NYSEALTR–2008–09 on the subject line.

Paper Comments

- Send paper comments in triplicate to Secretary, Securities and Exchange Commission, 100 F Street, NE., Washington, DC 20549–1090.

All submissions should refer to File Number SR–NYSEALTR–2008–09. This file number should be included on the subject line if e-mail is used. To help the Commission process and review your comments more efficiently, please use only one method. The Commission will post all comments on the Commission's Internet Web site (*http://www.sec.gov/rules/sro.shtml*). Copies of the submission, all subsequent amendments, all written statements with respect to the proposed rule change that are filed with the Commission, and all written communications relating to the proposed rule change between the Commission and any person, other than those that may be withheld from the public in accordance with the provisions of 5 U.S.C. 552, will be available for inspection and copying in the Commission's Public Reference Room, on official business days between the hours of 10 a.m. and 3 p.m. Copies of the filing also will be available for inspection and copying at the principal office of the Exchange. All comments received will be posted without change; the Commission does not edit personal identifying information from submissions. You should submit only information that you wish to make available publicly. All submissions should refer to File Number SR–NYSEALTR–2008–09 and should be submitted on or before December 31, 2008.

For the Commission, by the Division of Trading and Markets, pursuant to delegated authority.[15]

Florence E. Harmon,

Acting Secretary.

[FR Doc. E8–29137 Filed 12–9–08; 8:45 am]

BILLING CODE 8011–01–P

[15] 17 CFR 200.30–3(a)(12).

SECURITIES AND EXCHANGE COMMISSION

[Release No. 34–59049; File No. SR–NYSEArca–2008–132]

Self-Regulatory Organizations; NYSE Arca, Inc.; Notice of Filing and Immediate Effectiveness of Proposed Rule Change To Offer a New Order Type Known as the Adding Liquidity Only Order

December 3, 2008.

Pursuant to Section 19(b)(1) of the Securities Exchange Act of 1934 (the ''Act'')[1] and Rule 19b–4 thereunder,[2] notice is hereby given that on November 21, 2008, NYSE Arca, Inc. (''NYSE Arca'' or ''Exchange'') filed with the Securities and Exchange Commission (''Commission'') the proposed rule change as described in Items I and II below, which Items have been prepared by NYSE Arca. NYSE Arca filed the proposed rule change pursuant to Section 19(b)(3)(A) of the Act[3] and Rule 19b–4(f)(6) thereunder,[4] which renders it effective upon filing with the Commission. The Commission is publishing this notice to solicit comments on the proposed rule change from interested persons.

I. Self-Regulatory Organization's Statement of the Terms of Substance of the Proposed Rule Change

The Exchange proposes to amend Rule 7.31 in order to offer a new order type known as the Adding Liquidity Only order. The text of the proposed rule change is attached as Exhibit 5. A copy of this filing is available on the Exchange's Web site at *http://www.nyse.com*, at the Exchange's principal office and at the Commission's Public Reference Room.

II. Self-Regulatory Organization's Statement of the Purpose of, and Statutory Basis for, the Proposed Rule Change

In its filing with the Commission, NYSE Arca included statements concerning the purpose of, and basis for, the proposed rule change and discussed any comments it received on the proposed rule change. The text of these statements may be examined at the places specified in Item IV below. NYSE Arca has prepared summaries, set forth in Sections A, B, and C below, of the most significant aspects of such statements.

A. Self-Regulatory Organization's Statement of the Purpose of, and Statutory Basis for, the Proposed Rule Change

1. Purpose

In order to provide additional flexibility and increased functionality to its system and its Users,[5] the Exchange proposes to add NYSE Arca Equities Rule 7.31(nn) in order to offer an additional order type known as the Adding Liquidity Only (''ALO'') order.

The ALO is a limit order that is posted to the NYSE Arca book only in the event that the order adds liquidity. If the order received is marketable (at or outside of the NBBO) at the time of entry, the entire order will be rejected. Any order at the time of entry that will lock or cross the market will be rejected. ALO orders that, at the time of entry, would otherwise interact with un-displayed orders will be rejected.

Once accepted and placed in the NYSE Arca book, ALO orders will not route to an away market center. Also, once an ALO order posts to the NYSE Arca book, if the market moves and thereby causes either a locked or crossed market, the ALO will stand its ground.

ALO Orders are designed to encourage displayed liquidity and offer NYSE Arca Users greater discretion and flexibility to post liquidity on NYSE Arca.

2. Statutory Basis

The proposed rule change is consistent with Section 6(b) of the Act,[6] in general, and furthers the objectives of Section 6(b)(5),[7] in particular, in that it is designed to prevent fraudulent and manipulative acts and practices, to promote just and equitable principles of trade, to foster cooperation and coordination with persons engaged in facilitating transactions in securities, and to remove impediments to and perfect the mechanisms of a free and open market and a national market system. Specifically, the ALO order is designed to encourage displayed

[1] 15 U.S.C. 78s(b)(1).

[2] 17 CFR 240.19b–4.

[3] 15 U.S.C. 78s(b)(3)(A).

[4] 17 CFR 240.19b–4(f)(6).

[5] *See* NYSE Arca Rule 1.1(yy) for the definition of ''User.''

[6] 15 U.S.C. 78f(b).

[7] 15 U.S.C. 78f(b)(5).

liquidity, and allow Users to control costs by establishing pricing clarity

B. Self-Regulatory Organization's Statement on Burden on Competition

The Exchange does not believe that the proposed rule change will impose any burden on competition that is not necessary or appropriate in furtherance of the purposes of the Act.

C. Self-Regulatory Organization's Statement on Comments on the Proposed Rule Change Received From Members, Participants or Others

No written comments were solicited or received with respect to the proposed rule change.

III. Date of Effectiveness of the Proposed Rule Change and Timing for Commission Action

Because the foregoing proposed rule change does not: (i) Significantly affect the protection of investors or the public interest; (ii) impose any significant burden on competition; and (iii) become operative for 30 days from the date on which it was filed, or such shorter time as the Commission may designate if consistent with the protection of investors and the public interest, the proposed rule change has become effective pursuant to Section 19(b)(3)(A) of the Act [8] and subparagraph (f)(6) of Rule 19b–4 thereunder.[9]

A proposed rule change filed under 19b–4(f)(6) normally may not become operative prior to 30 days after the date of filing.[10] However, Rule 19b–4(f)(6)(iii) [11] permits the Commission to designate a shorter time if such action is consistent with the protection of investors and the public interest. The Exchange has requested that the Commission waive the 30-day operative delay and designate the proposed rule change operative upon filing to allow use of the ALO order type to market participants on NYSE Arca prior to the end of the 30-day period. The Exchange stated that waiver of the 30-day delayed operative date would allow the Exchange to immediately offer the ALO order to market participants on NYSE Arca, providing them with greater discretion and flexibility to post liquidity on NYSE Arca. The Commission believes that waiving the 30-day operative delay is consistent with the protection of investors and the public interest. Therefore, the Commission designates the proposal operative upon filing.[12]

At any time within 60 days of the filing of the proposed rule change, the Commission may summarily abrogate such rule change if it appears to the Commission that such action is necessary or appropriate in the public interest, for the protection of investors, or otherwise in furtherance of the purposes of the Act.

IV. Solicitation of Comments

Interested persons are invited to submit written data, views, and arguments concerning the foregoing, including whether the proposed rule change is consistent with the Act. Comments may be submitted by any of the following methods:

Electronic Comments

- Use the Commission's Internet comment form (*http://www.sec.gov/rules/sro.shtml*); or
- Send an e-mail to *rule-comments@sec.gov*. Please include File No. SR–NYSEArca–2008–132 on the subject line.

Paper Comments

- Send paper comments in triplicate to Secretary, Securities and Exchange Commission, Station Place, 100 F Street, NE., Washington, DC 20549–1090.

All submissions should refer to File Number SR–NYSEArca–2008–132. This file number should be included on the subject line if e-mail is used. To help the Commission process and review your comments more efficiently, please use only one method. The Commission will post all comments on the Commission's Internet Web site (*http://www.sec.gov/rules/sro.shtml*). Copies of the submission, all subsequent amendments, all written statements with respect to the proposed rule change that are filed with the Commission, and all written communications relating to the proposed rule change between the Commission and any person, other than those that may be withheld from the public in accordance with the provisions of 5 U.S.C. 552, will be available for inspection and copying in the Commission's Public Reference Room, on official business days between the hours of 10 a.m. and 3 p.m. Copies of such filing also will be available for inspection and copying at the principal office of NYSE Arca. All comments received will be posted without change; the Commission does not edit personal identifying information from submissions. You should submit only information that you wish to make available publicly. All submissions should refer to File Number SR–NYSEArca–2008–132 and should be submitted on or before December 31, 2008.

For the Commission, by the Division of Trading and Markets, pursuant to delegated authority.[13]

Florence E. Harmon,

Acting Secretary.

[FR Doc. E8–29153 Filed 12–9–08; 8:45 am]

BILLING CODE 8011–01–P

[8] 15 U.S.C. 78s(b)(3)(A).

[9] 17 CFR 240.19b–4(f)(6).

[10] 17 CFR 240.19b–4(f)(6). In addition, Rule 19b–4(f)(6)(iii) requires a self-regulatory organization to give the Commission written notice of its intent to file the proposed rule change at least five business days prior to the date of filing of the proposed rule change, or such shorter time as designated by the Commission. The Exchange has complied with this requirement.

[11] *Id.*

[12] For purposes only of waiving the 30-day operative delay of this proposal, the Commission has considered the proposed rule's impact on efficiency, competition, and capital formation. 15 U.S.C. 78c(f).

[13] 17 CFR 200.30–3(a)(12).

SECURITIES AND EXCHANGE COMMISSION

[Release No. 34–59051; File No. SR–NYSEArca–2008–123]

Self-Regulatory Organizations; NYSE Arca, Inc.; Order Granting Accelerated Approval of a Proposed Rule Change, as Modified by Amendment No. 1 Thereto, Relating to the Listing and Trading of Trust Certificates

December 4, 2008.

On November 4, 2008, NYSE Arca, Inc. (''NYSE Arca'' or ''Exchange''), through its wholly owned subsidiary, NYSE Arca Equities, Inc. (''NYSE Arca Equities'' or ''Corporation''), filed with the Securities and Exchange Commission (''Commission''), pursuant to Section 19(b)(1) of the Securities Exchange Act of 1934 (''Exchange Act'') [1] and Rule 19b–4 thereunder,[2] a proposed rule change relating to the listing and trading of Trust Certificates. On November 6, 2008, the Exchange filed Amendment No. 1 to the proposed rule change. The proposed rule change, as modified by Amendment No. 1 thereto, was published in the **Federal Register** on November 18, 2008 for a 15-day comment period.[3] The Commission received no comments on the proposal. This order approves the proposed rule change, as modified by Amendment No. 1 thereto, on an accelerated basis.

I. Description of the Proposal

The Exchange proposes to adopt new NYSE Arca Equities Rule 5.2(j)(7) to permit the listing and trading of Trust

[1] 15 U.S.C. 78s(b)(1).

[2] 17 CFR 240.19b–4.

[3] *See* Securities Exchange Act Release No. 58920 (November 7, 2008), 73 FR 68479 (''Notice'').

Certificates and amend its Schedule of Fees and Charges for Exchange Services (''Fee Schedule'') to incorporate Trust Certificates for purposes of such schedule. In addition, pursuant to proposed NYSE Arca Equities Rule 5.2(j)(7), the Exchange proposes to list 14 issues of Trust Certificates (''Amex Trust Certificates''), which are currently listed and traded on NYSE Alternext US LLC (formerly known as the American Stock Exchange LLC) (''NYSE Alternext US'').[4]

A. Proposed NYSE Arca Equities Rule 5.2(j)(7) and Amendment to Fee Schedule

Trust Certificates are certificates representing an interest in a special purpose trust (''Trust'') created pursuant to a trust agreement. The Trust will only issue Trust Certificates, which may or may not provide for the repayment of the original principal investment amount. The sole purpose of the Trust will be to invest the proceeds from its initial public offering to provide for a return linked to the performance of specified assets and to engage only in activities incidental to these objectives. Trust Certificates pay an amount at maturity based upon the performance of specified assets, as described below.

Proposed NYSE Arca Equities Rule 5.2(j)(7) provides that the Exchange will consider the trading, whether by listing or pursuant to unlisted trading privileges, of Trust Certificates based on the following: (1) An underlying index or indexes of equity securities (an ''Equity Index Reference Asset''); (2) instruments that are direct obligations of the issuing company, either exercisable throughout their life (*i.e.*, American style) or exercisable only on their expiration date (*i.e.*, European style), entitling the holder to a cash settlement in U.S. dollars to the extent that the foreign or domestic index has declined below (for put warrant) or increased above (for a call warrant) the pre-stated cash settlement value of the index (''Index Warrants''); or (3) a combination of two or more Equity Index Reference Assets or Index Warrants.

Proposed Commentary .01 to new NYSE Arca Equities Rule 5.2(j)(7) sets forth criteria for continued listing and provides that the Corporation will commence delisting or removal proceedings with respect to an issue of Trust Certificates (unless the Commission has approved the continued trading of such issue): (1) If the aggregate market value or the principal amount of the securities publicly held is less than $400,000; (2) if the value of the index or composite value of the indexes is no longer calculated or widely disseminated on at least a 15-second basis with respect to indexes containing only securities listed on a national securities exchange, or on at least a 60-second basis with respect to indexes containing foreign country securities;[5] or (3) if such other event shall occur or condition exists which, in the opinion of the Corporation, makes further dealings on the Corporation inadvisable.

Proposed Commentary .02 provides that the term of the Trust, which may terminate early under certain circumstances, shall be as stated in the Trust prospectus. In addition, a Trust may be terminated under such earlier circumstances as may be specified in the Trust prospectus. Proposed Commentary .03 sets forth requirements applicable to the trustee of a Trust, including that the trustee must be a trust company or banking institution having substantial capital and surplus and the experience and facilities for handling a corporate trust business.[6] Proposed Commentary .04 provides that voting rights shall be as set forth in the applicable Trust prospectus.

Proposed Commentary .05 provides that the Exchange will implement written surveillance procedures for Trust Certificates. Proposed Commentary .06 states that Trust Certificates will be subject to the Exchange's equity trading rules. Proposed Commentary .07 provides that, prior to the commencement of trading of a particular issue of Trust Certificates listed pursuant to new NYSE Arca Equities Rule 5.2(j)(7), the Corporation will evaluate the nature and complexity of the issue and, if appropriate, distribute a circular to ETP Holders providing guidance regarding compliance responsibilities (including suitability recommendations and account approval) when handling transactions in Trust Certificates.

Proposed Commentary .08 provides that Trust Certificates may be exchangeable at the option of the holder into securities that participate in the return of the applicable underlying asset. In the event that the Trust Certificates are exchangeable at the option of the holder and contains an Index Warrant, then, the ETP Holder must ensure that the holder's account is approved for options trading in accordance with NYSE Arca Rule 9.2 to exercise such rights. Proposed Commentary .09 provides that Trust Certificates may pass-through periodic payments of interest and principle of the underlying securities. Proposed Commentary .10 provides that Trust payments may be guaranteed pursuant to a financial guaranty insurance policy, which may include swap agreements. Lastly, proposed Commentary .11 provides that Trust Certificates may be subject to early termination or call features.

The Exchange also proposes to amend footnote 4 to the NYSE Arca Equities Fee Schedule to include Trust Certificates as ''Structured Products'' for purposes of such schedule.

B. Issues of Amex Trust Certificates To Be Listed

Pursuant to proposed NYSE Arca Equities Rule 5.2(j)(7), the Exchange proposes to list and trade the Amex Trust Certificates. The Amex Trust Certificates are currently listed and traded on NYSE Alternext US. The Exchange states that: (1) It does not currently list Trust Certificates; and (2) the proposed rule change is intended only to accommodate the listing of the Amex Trust Certificates on the Exchange.[7] Prior to listing on the Exchange, the Amex Trust Certificates

[4] The 14 issues of Trust Certificates, the descriptions of which may be found in the Notice and respective prospectuses, are: (1) Safety First Trust Series 2007–1 (AZP); (2) Safety First Investments TIERS® Principal-Protected Minimum Return Trust Certificates, Series Nasdaq 2003–13 (NAS); (3) Safety First Trust Series 2008–1 (ATA); (4) Safety First Trust Series 2007–2 (AFO); (5) Safety First Investments TIERS® Principal-Protected Minimum Return Trust Certificates, Series S&P 2003–22 (SYP); (6) Safety First Investments TIERS® Principal-Protected Minimum Return Trust Certificates, Series S&P 2003–23 (SPO); (7) Safety First Investments TIERS® Principal-Protected Minimum Return Trust Certificates, Series Nasdaq 2003–12 (SFH); (8) Safety First Investments TIERS® Principal-Protected Minimum Return Trust Certificates, Series Russell 2004–1 (RUD); (9) Safety First Trust Series 2008–2 (AMM); (10) Safety First Trust Series 2008–3 (AHB); (11) Safety First Trust Series 2008–4 (AHY); (12) Safety First Trust Series 2007–3 (AKE); (13) Safety First Trust Series 2007–4 (AKN); and (14) Safety First Trust Series 2006–1 (AGB). *See* Notice, *id.*, at nn.9–22.

[5] If the official index value does not change during some or all of the period when trading is occurring on NYSE Arca Marketplace (for example, for indexes of foreign country securities, because of time zone differences or holidays in the countries where such indexes' component stocks trade), then the last calculated official index value must remain available throughout NYSE Arca Marketplace trading hours. *See* Proposed Commentary .01(ii) to new NYSE Arca Equities Rule 5.2(j)(7).

[6] In cases where, for any reason, an individual has been appointed as trustee, a qualified trust company or banking institution must be appointed co-trustee. *See* Proposed Commentary .03(i) to new NYSE Arca Equities Rule 5.2(j)(7). In addition, no change is to be made in the trustee of a listed issue without prior notice to, and approval of, the Corporation. *See* Proposed Commentary .03(ii) to new NYSE Arca Equities Rule 5.2(j)(7).

[7] The Exchange represents that it will not list an additional issue of Trust Certificates unless the Exchange has previously filed with the Commission a proposed rule change pursuant to Rule 19b–4 under the Act to permit such listing.

would be required to satisfy the applicable delisting procedures of NYSE Alternext US and applicable statutory and regulatory requirements, including, without limitation, Section 12 of the Exchange Act,[8] relating to the listing of the Amex Trust Certificates on the Exchange.[9] The Exchange represents that the Amex Trust Certificates satisfy the requirements of proposed NYSE Arca Equities Rule 5.2(j)(7) and thereby qualify for listing on the Exchange.

Descriptions of the Amex Trust Certificates are included in their respective prospectuses [10] and in the Notice.

C. Exchange Rules Applicable to Trust Certificates

Trust Certificates will be subject to all Exchange rules governing the trading of equity securities. The Exchange's equity margin rules will apply to transactions in Trust Certificates. Trust Certificates will trade during trading hours set forth in NYSE Arca Equities Rule 7.34(a).[11]

The Exchange notes that none of the indexes related to the Amex Trust Certificates described above is maintained by a broker-dealer. The Exchange notes further that, with respect to such indexes, any advisory committee, supervisory board, or similar entity that advises an index licensor or administrator or that makes decisions regarding the index composition, methodology, and related matters must implement and maintain, or be subject to, procedures designed to prevent the use and dissemination of material, non-public information regarding the applicable index.

D. Trading Halts

With respect to trading halts, the Exchange may consider all relevant factors in exercising its discretion to halt or suspend trading in the Trust Certificates. Trading may be halted because of market conditions or for reasons that, in the view of the Exchange, make trading in the Trust Certificates inadvisable. These may include: (1) The extent to which trading is not occurring in the underlying securities; or (2) whether other unusual conditions or circumstances detrimental to the maintenance of a fair and orderly market are present.[12]

E. Information Dissemination

The value of the applicable index relating to an issue of the Trust Certificates, or, for Trust Certificates based on multiple indexes, the composite value of the indexes, will be calculated and disseminated on at least a 15-second basis with respect to indexes containing only securities listed on a national securities exchange, or on at least a 60-second basis with respect to indexes containing foreign country securities.[13] The values of the indexes upon which the applicable Amex Trust Certificates are based are widely disseminated by major market data vendors and financial publications. In addition, the Exchange will disseminate the composite index values, as applicable, via the Consolidated Tape. If the index or composite index value applicable to an issue of Trust Certificates is not being disseminated as required, the Exchange may halt trading during the day on which the interruption first occurs. If such interruption persists past the trading day in which it occurred, the Exchange will halt trading no later than the beginning of the trading day following the interruption. Further, quotation and last-sale information will be disseminated by the Exchange via the Consolidated Tape.

F. Surveillance

The Exchange intends to utilize its existing surveillance procedures applicable to derivative products, which will include Trust Certificates, to monitor trading in the securities. The Exchange represents that these procedures are adequate to properly monitor Exchange trading of the securities in all trading sessions and to deter and detect violations of Exchange rules and all applicable federal securities laws.[14] The Exchange's current trading surveillance focuses on detecting when securities trade outside their normal patterns. When such situations are detected, surveillance analysis follows and investigations are opened, where appropriate, to review the behavior of all relevant parties for all relevant trading violations. In addition, the Exchange states that it has a general policy prohibiting the distribution of material, non-public information by its employees.

The Exchange also states that it may obtain information via the Intermarket Surveillance Group (''ISG'') from other exchanges who are members of ISG.[15] The Exchange notes, however, that some of the index components on which the Trust Certificates are valued may trade on markets that are not ISG members. The Exchange notes further that, as of October 30, 2008, with the exceptions noted below, for all Amex Trust Certificates described above, no more than 20% of the dollar weight in the aggregate of the index or composite indexes, as applicable, consists of component securities having their primary trading market outside the United States on foreign trading markets that are not members of ISG or parties to comprehensive surveillance sharing agreements with the Exchange. As of October 30, 2008, for AZP, ATA, AHB and AKN,[16] 20.56% of the applicable composite index weights consisted of non-U.S. securities having a primary trading market that is not an ISG member or is not a party to a comprehensive surveillance sharing agreement with the Exchange.

G. Information Bulletin

Prior to the commencement of trading, the Exchange will inform its ETP Holders in an Information Bulletin of the special characteristics and risks associated with trading an issue of Trust Certificates and suitability recommendation requirements. Specifically, the Information Bulletin will discuss the following: (1) The procedures for purchases and redemptions of Trust Certificates; (2) NYSE Arca Equities Rule 9.2(a), which imposes a duty of due diligence on its ETP Holders to learn the essential facts relating to every customer prior to trading an issue of Trust Certificates; and (3) trading information. In addition, the Information Bulletin will reference that an issue of Trust Certificates is

[8] 15 U.S.C. 78(*l*).

[9] The Exchange will seek the voluntary consent of the issuer of the Amex Trust Certificates to be delisted from NYSE Alternext US and listed on the Exchange. The Exchange notes that its approval of the Amex Trust Certificates' listing applications would be required prior to listing.

[10] *See supra* note 4.

[11] Pursuant to NYSE Arca Equities Rule 7.34(a), the NYSE Arca Marketplace will have three trading sessions each day the Corporation is open for business unless otherwise determined by the Corporation: (1) Opening Session, from 1:00:00 a.m. (Pacific Time) until the commencement of the Core Trading Session (the Opening Auction and the Market Order Auction shall occur during the Opening Session); (2) Core Trading Session, for each security from 6:30:00 a.m. (Pacific Time) or at the conclusion of the Market Order Auction, whichever comes later, until 1:00:00 p.m. (Pacific Time); and (3) Late Trading Session, from the conclusion of the Core Trading Session until 5:00:00 p.m. (Pacific Time).

[12] *See* Commentary .04 to NYSE Arca Equities Rule 7.12.

[13] For issues of Trust Certificates based on multiple indexes, the Exchange will cause to be calculated and disseminated a composite value for such indexes.

[14] E-mail from Michael Cavalier, Chief Counsel, NYSE Euronext, to Edward Cho, Special Counsel, Division of Trading and Markets, Commission, dated November 20, 2008.

[15] For a list of current members of the ISG, *see http://www.isgportal.org.*

[16] AZP, ATA, AHB and AKN are the trading symbols for Safety First Trust Series 2007–1, Safety First Trust Series 2008–1, Safety First Trust Series 2008–3, and Safety First Trust Series 2007–4, respectively. *See* Notice, *supra* note 3; *see also supra* note 4.

subject to various fees and expenses described in the applicable prospectus.

II. Discussion and Commission's Findings

The Commission has carefully reviewed the proposed rule change and finds that it is consistent with the requirements of Section 6 of the Exchange Act[17] and the rules and regulations thereunder applicable to a national securities exchange.[18] In particular, the Commission finds that the proposal is consistent with Section 6(b)(5) of the Exchange Act,[19] which requires, among other things, that the Exchange's rules be designed to prevent fraudulent and manipulative acts and practices, to promote just and equitable principles of trade, to foster cooperation and coordination with persons engaged in facilitating transactions in securities, to remove impediments to and perfect the mechanism of a free and open market and a national market system, and, in general, to protect investors and the public interest.

With respect to the proposal to adopt new NYSE Arca Equities Rule 5.2(j)(7), the Commission notes that the definitions of Equity Index Reference Asset and Index Warrants are substantively identical to the definitions assigned to Equity Reference Asset, with respect to Equity Index-Linked Securities under NYSE Arca Equities Rule 5.2(j)(6), and Index Warrants, as defined in NYSE Arca Equities Rule 8.2(e), respectively. In addition, the Commission notes that proposed NYSE Arca Equities Rule 5.2(j)(7) is solely designed to accommodate the listing and trading of the Amex Trust Certificates, which are currently listed on NYSE Alternext US, on the Exchange. No Trust Certificates are currently listed on the Exchange. The Exchange represents that it will not list any additional Trust Certificates other than the Amex Trust Certificates, unless the Exchange has previously filed a proposed rule change pursuant to Rule 19b–4 under the Exchange Act to permit such listing.[20] The Commission believes that the proposed criteria under new NYSE Arca Equities Rule 5.2(j)(7), and in particular, the continued listing requirements under proposed Commentary .01 thereto, are reasonably designed to protect investors and the public interest. Specifically, the Exchange must commence delisting or removal proceedings with respect to an issue of Trust Certificates if: (1) The aggregate market value or the principal amount publicly held is less than $400,000; (2) the value of the index or composite value of the indexes is no longer calculated or widely disseminated as required; or (3) such other event shall occur or condition exists which, in the opinion of the Exchange, makes further dealings in Trust Certificates on the Exchange inadvisable. In addition, the Commission believes that the conforming change made to the Fee Schedule clarifies the application of the listing fees as they pertain to ''Structured Products,'' and specifically, Trust Certificates.

The Commission further believes that the proposal to list and trade the Amex Trust Certificates on the Exchange is consistent with Section 11A(a)(1)(C)(iii) of the Exchange Act,[21] which sets forth Congress' finding that it is in the public interest and appropriate for the protection of investors and the maintenance of fair and orderly markets to assure the availability to brokers, dealers, and investors of information with respect to quotations for and transactions in securities. Quotation and last-sale information regarding Trust Certificates, as well as the composite value of the indexes on which certain Units are based, will be disseminated by the Exchange via the Consolidated Tape. The value of the index or indexes, as the case may be, will also be widely disseminated by major market data vendors and financial publications. The Exchange represents that the value of the applicable index relating to an issue of the Amex Trust Certificates, or, for Amex Trust Certificates based on multiple indexes, the composite value of the indexes, will be calculated and disseminated on at least a 15-second basis with respect to indexes containing only securities listed on a national securities exchange, or on at least a 60-second basis with respect to indexes containing foreign country securities.[22]

The Commission also believes that the proposal to list and trade the Amex Trust Certificates is reasonably designed to promote fair disclosure of information that may be necessary to price the Amex Trust Certificates appropriately and to prevent trading when a reasonable degree of transparency cannot be assured. The Commission notes that, if the index or composite index value applicable to an issue of Trust Certificates is not being disseminated as required, the Exchange may halt trading during the day on which the interruption first occurs. If such interruption persists past the trading day in which it occurred, the Exchange will halt trading no later than the beginning of the trading day following the interruption. In addition, the Exchange may consider all relevant factors in exercising its discretion to halt or suspend trading in Trust Certificates. Trading may be halted because of market conditions or for reasons that, in the view of the Exchange, make trading in Trust Certificates inadvisable. These may include: (1) The extent to which trading is not occurring in the underlying securities; or (2) whether other unusual conditions or circumstances detrimental to the maintenance of a fair and orderly market are present.

The Exchange has further represented that none of the indexes related to the Amex Trust Certificates is maintained by a broker-dealer. The Exchange notes that, with respect to such indexes, any advisory committee, supervisory board, or similar entity that advises an index licensor or administrator or that makes decisions regarding the index composition, methodology, and related matters must implement and maintain, or be subject to, procedures designed to prevent the use and dissemination of material, non-public information regarding the applicable index.

The Commission further believes that the trading rules and procedures to which the Amex Trust Certificates will be subject pursuant to this proposal are consistent with the Exchange Act. The Exchange has represented that the Amex Trust Certificates will be subject to all Exchange's rules governing the trading of equity securities.

In support of this proposal, the Exchange has made the following representations:

(1) The Amex Trust Certificates satisfy the requirements of proposed NYSE Arca Equities Rule 5.2(j)(7), which includes the continued listing criteria for Trust Certificates.

(2) The Exchange's surveillance procedures are adequate to properly monitor trading of Trust Certificates in all trading sessions and to deter and detect violations of Exchange rules and all applicable federal securities laws.

(3) The Exchange will distribute an Information Bulletin, the contents of which are more fully described above, to its ETP Holders in connection with the trading of Trust Certificates.

[17] 15 U.S.C. 78f.

[18] In approving this proposed rule change the Commission has considered the proposed rule's impact on efficiency, competition, and capital formation. *See* 15 U.S.C. 78c(f).

[19] 15 U.S.C. 78f(b)(5).

[20] The Commission notes that, if the Exchange seeks to list additional Trust Certificates other than the Amex Trust Certificates in the future, additional standards such as initial listing criteria to proposed NYSE Arca Equities Rule 5.2(j)(7) may need to be incorporated.

[21] 15 U.S.C. 78k–1(a)(1)(C)(iii).

[22] *See supra* note 5.

This approval order is based on the Exchange's representations.

For the foregoing reasons, the Commission finds that the proposed rule change is consistent with Section 6(b)(5) of the Exchange Act [23] and the rules and regulations thereunder applicable to a national securities exchange.

III. Accelerated Approval

The Commission finds good cause, pursuant to Section 19(b)(2) of the Exchange Act,[24] for approving the proposed rule change prior to the thirtieth day after the date of publication of the Notice in the **Federal Register**. The Commission notes that proposed NYSE Arca Equities Rule 5.2(j)(7) is solely designed to accommodate the listing and trading of the Amex Trust Certificates, which are currently listed and trading on NYSE Alternext US, on the Exchange. The Commission further notes that, if the Exchange seeks to list and trade, or trade pursuant to unlisted trading privileges, any additional series of Trust Certificates, the Exchange is required to file a proposed rule change with the Commission pursuant to Section 19(b)(1) of the Exchange Act and Rule 19b–4 thereunder. The Commission finds that the proposed rule change would benefit investors by permitting the listing of the Amex Trust Certificates on the Exchange and providing investors and other market participants seamless and uninterrupted trading opportunities in the Amex Trust Certificates, while maintaining sufficient minimum standards with respect to the continued trading of such Trust Certificates.

IV. Conclusion

It is therefore ordered, pursuant to Section 19(b)(2) of the Exchange Act,[25] that the proposed rule change (SR–NYSEArca–2008–123), as modified by Amendment No. 1 thereto, be, and it hereby is, approved on an accelerated basis.

For the Commission, by the Division of Trading and Markets, pursuant to delegated authority.[26]

Florence E. Harmon,

Acting Secretary.

[FR Doc. E8–29155 Filed 12–9–08; 8:45 am]

BILLING CODE 8011–01–P

[23] 15 U.S.C. 78f(b)(5).

[24] 15 U.S.C. 78s(b)(2).

[25] *Id.*

[26] 17 CFR 200.30–3(a)(12).

SECURITIES AND EXCHANGE COMMISSION

[Release No. 34–58895; File No.SR–NYSEArca–2008–122]

Self-Regulatory Organizations; NYSE Arca, Inc.; Notice of Filing and Order Granting Accelerated Approval of Proposed Rule Change To Extend the Pilot Program for NYSE Arca Realtime Reference Prices Service

Correction

In notice document E8–26627 beginning on page 66956 in the issue of Wednesday, November 12, 2008 make the following correction:

On page 66957, in the third column, under heading **III. Solicitation of Comments**, in the last paragraph, in the second to last line ''December 1, 2008'' should read ''December 3, 2008''.

[FR Doc. Z8–26627 Filed 12–9–08; 8:45 am]

BILLING CODE 1505–01–D

SECURITIES AND EXCHANGE COMMISSION

[Release No. 34–59054; File Nos. SR–OCC–2008–13 and SR–OCC–2008–14]

Self-Regulatory Organizations; The Options Clearing Corporation; Notice of Filing and Order Granting Accelerated Approval of Proposed Rule Changes Relating to iShares COMEX Gold Trust and iShares Silver Trust Shares

December 4, 2008.

Pursuant to Section 19(b)(1) of the Securities Exchange Act of 1934 (''Act''),[1] notice is hereby given that on July 23, 2008, The Options Clearing Corporation (''OCC'') filed with the Securities and Exchange Commission (''Commission'') proposed rule changes SR–OCC–2008–13 and SR–OCC–2008–14 as described in Items I and II below, which items have been prepared primarily by OCC. The Commission is publishing this notice and order to solicit comments from interested persons and to grant accelerated approval to the proposed rule changes.

I. Self-Regulatory Organization's Statement of the Terms of Substance of the Proposed Rule Changes

The proposed rule changes would remove any potential question on the jurisdictional status of options or security futures on iShares COMEX Gold Trust shares and iShares Silver Trust shares by amending the interpretation following the definition of ''fund share'' in Article I, Section 1 of OCC's By-Laws.

[1] 15 U.S.C. 78s(b)(1).

II. Self-Regulatory Organization's Statement of the Purpose of, and Statutory Basis for, the Proposed Rule Changes

In its filing with the Commission, OCC included statements concerning the purpose of and basis for the proposed rule changes and discussed any comments it received on the proposed rule changes. The text of these statements may be examined at the places specified in Item IV below. OCC has prepared summaries, set forth in sections (A), (B), and (C) below, of the most significant aspects of these statements.[2]

(A) Self-Regulatory Organization's Statement of the Purpose of, and Statutory Basis for, the Proposed Rule Changes

The purpose of the proposed rule changes is to remove any potential question on the jurisdictional status of options or security futures on iShares COMEX Gold Trust shares and iShares Silver Trust shares by amending the interpretation following the definition of ''fund share'' in Article I, Section 1 of OCC's By-Laws. On May 30, 2008, the Commission approved rule filing SR–OCC–2008–07, which added this interpretation with respect to the treatment and clearing of options and security futures on SPDR Gold Shares.[3] Under the proposed rule changes, OCC would also (1) clear and treat as securities options any option contracts on iShares COMEX Gold shares and iShares Silver Trust shares that are traded on securities exchanges and (2) clear and treat as security futures any futures contracts on iShares COMEX Gold shares and iShares Silver Trust shares.[4]

In its capacity as a ''derivatives clearing organization'' registered as such with the Commodity Futures Trading Commission (''CFTC''), OCC also filed the proposed rule changes with the CFTC for prior approval by the CFTC pursuant to provisions of the Commodity Exchange Act (''CEA'') in order to foreclose any potential liability under the CEA based on an argument that the clearing by OCC of such options as securities options or that the clearing

[2] The Commission has modified the text of the summaries prepared by OCC.

[3] Securities Exchange Act Release No. 57895 (May 30, 2008), 73 FR 32066 (June 5, 2008).

[4] The exact language of the interpretation can be found at *http://www.optionsclearing.com/publications/rules/proposed_changes/sr_occ_08_13.pdf* and *http://www.optionsclearing.com/publications/rules/proposed_changes/sr_occ_08_14.pdf*.

of such futures as security futures constitutes a violation of the CEA. The products for which approval is requested are essentially the same as the options and security futures on SPDR Gold Shares that OCC currently clears pursuant to the rule change referred to above and an exemption issued by the CFTC.[5] OCC believes that this filing raises no new regulatory or policy issues.

OCC believes that the proposed interpretation of its By-Laws is consistent with the purposes and requirements of Section 17A of the Act[6] because it is designed to promote the prompt and accurate clearance and settlement of transactions in securities options and security futures, to foster cooperation and coordination with persons engaged in the clearance and settlement of such transactions, to remove impediments to and perfect the mechanism of a national system for the prompt and accurate clearance and settlement of such transactions, and, in general, to protect investors and the public interest. It accomplishes this purpose by reducing the likelihood of a dispute as to the Commission's jurisdiction, or shared jurisdiction in the case of security futures, over derivatives based on iShares COMEX Gold Trust shares and iShares Silver Trust shares. The proposed rule changes are not inconsistent with the By-Laws and Rules of OCC, including any proposed to be amended.

(B) Self-Regulatory Organization's Statement on Burden on Competition

OCC does not believe that the proposed rule changes would impose any burden on competition.

(C) Self-Regulatory Organization's Statement on Comments on the Proposed Rule Changes Received From Members, Participants, or Others

Written comments were not and are not intended to be solicited with respect to the proposed rule changes, and none have been received.

III. Commission's Findings and Order Granting Accelerated Approval of the Proposed Rule Changes

Section 17A(b)(3)(F) of the Act requires, among other things, that the rules of a clearing agency be designed to promote the prompt and accurate clearance and settlement of securities transactions.[7] By amending its By-Laws to help clarify that options and security futures on iShares COMEX Gold Trust shares and iShares Silver Trust shares will be treated and cleared as securities options or security futures, OCC's proposed rule changes should help clarify the jurisdictional status of such contracts and accordingly should help to promote the prompt and accurate clearance and settlement of securities transactions. In accordance with the Memorandum of Understanding entered into between the CFTC and the Commission on March 11, 2008, and in particular the addendum thereto concerning Principles Governing the Review of Novel Derivative Products, the Commission believes that novel derivative products that implicate areas of overlapping regulatory concern should be permitted to trade in either or both a CFTC- or Commission-regulated environment, in a manner consistent with laws and regulations (including the appropriate use of all available exemptive and interpretive authority).

In addition, the Commission finds good cause, pursuant to Section 19(b)(2) of the Act,[8] for approving the proposed rule changes prior to the thirtieth day after the publication of notice in the **Federal Register**. The proposed rule changes are similar to the proposal previously approved by the Commission regarding the treatment and clearing of options and security futures on SPDR Gold Shares.[9] Therefore, the Commission does not believe that the proposed rule changes raise any new regulatory issues.

IV. Solicitation of Comments

Interested persons are invited to submit written data, views, and arguments concerning the foregoing, including whether the proposed rule changes are consistent with the Act. Comments may be submitted by any of the following methods:

Electronic Comments

- Use the Commission's Internet comment form (*http://www.sec.gov/rules/sro.shtml*) or
- Send an e-mail to *rule-comments@sec.gov*. Please include File Numbers SR–OCC–2008–13 and SR–OCC–2008–14 on the subject line.

Paper Comments

- Send paper comments in triplicate to Secretary, Securities and Exchange Commission, 100 F Street, NE., Washington, DC 20549–1090.

All submissions should refer to File Numbers SR–OCC–2008–13 and SR–OCC–2008–14. This file number should be included on the subject line if e-mail is used. To help the Commission process and review your comments more efficiently, please use only one method. The Commission will post all comments on the Commission's Internet Web site (*http://www.sec.gov/rules/sro.shtml*). Copies of the submission, all subsequent amendments, all written statements with respect to the proposed rule changes that are filed with the Commission, and all written communications relating to the proposed rule changes between the Commission and any person, other than those that may be withheld from the public in accordance with the provisions of 5 U.S.C. 552, will be available for inspection and copying in the Commission's Public Reference Room, 100 F Street, NE., Washington, DC 20549, on official business days between the hours of 10 a.m. and 3 p.m. Copies of such filings also will be available for inspection and copying at the principal office of OCC and on OCC's Web site at *http://www.optionsclearing.com/publications/rules/proposed_changes/sr_occ_08_13.pdf* and *http://www.optionsclearing.com/publications/rules/proposed_changes/sr_occ_08_14.pdf*. All comments received will be posted without change; the Commission does not edit personal identifying information from submissions. You should submit only information that you wish to make available publicly. All submissions should refer to File Numbers SR–OCC–2008–13 and SR–OCC–2008–14 and should be submitted on or before December 31, 2008.

IV. Conclusion

On the basis of the foregoing, the Commission finds that the proposed rule changes are consistent with the requirements of the Act and in particular Section 17A of the Act and the rules and regulations thereunder.[10]

It is therefore ordered, pursuant to Section 19(b)(2) of the Act, that the proposed rule changes (File Nos. SR–OCC–2008–13 and SR–OCC–2008–14) be and hereby are approved on an accelerated basis.

[5] *Supra* note 3. CFTC Order Exempting the Trading and Clearing of Certain Products Related to SPDR Gold Trust Shares, 73 FR 31981 (June 5, 2008).

[6] 15 U.S.C. 78q– 1.

[7] 15 U.S.C. 78q–1(b)(3)(F).

[8] 15 U.S.C. 78s(b)(2).

[9] *Supra* note 3.

[10] In approving the proposed rule changes, the Commission considered the proposals' impact on efficiency, competition and capital formation. 15 U.S.C. 78c(f).

For the Commission by the Division of Trading and Markets, pursuant to delegated authority.[11]

Florence E. Harmon,

Acting Secretary.

[FR Doc. E8–29156 Filed 12–9–08; 8:45 am]

BILLING CODE 8011–01–P

[11] 17 CFR 200.30–3(a)(12).

SECURITIES AND EXCHANGE COMMISSION

[Release No. 34–59035; File No. SR–DTC–2007–07]

Self-Regulatory Organizations; The Depository Trust Company; Order Approving Proposed Rule Change To Amend the Applicant Disqualification Criteria Contained in Its Rules

December 1, 2008.

I. Introduction

On April 30, 2007, the Depository Trust Company (''DTC'') filed with the Securities and Exchange Commission (''Commission'') and on February 7, 2008, and March 18, 2008, amended proposed rule change SR–DTC–2007–07 pursuant to Section 19(b)(1) of the Securities Exchange Act of 1934 (''Act'').[1] The proposed rule change was published for comment in the **Federal Register** on July 16, 2008.[2] No comment letters were received on the proposal. This order approves the proposal.

II. Description

The proposed rule change amends the applicant disqualification criteria contained in DTC's rules in order to harmonize them with similar rules of DTC's affiliates, National Securities Clearing Corporation (''NSCC'') and Fixed Income Clearing Corporation (''FICC'').

A. Statutory Disqualification

DTC Rule 2 sets forth the basic standards for the admission of DTC Participants and defines certain criteria that may disqualify an applicant from participation. While the factors that may disqualify an applicant are generally consistent among DTC, FICC, and NSCC rules, DTC's rules do not specifically reference an order of statutory disqualification as defined in Section 3(a)(39) of the Act[3] among its disqualification criteria.[4] To promote uniformity among the rules of DTC and its affiliates, DTC is adding such a provision to its rules.

B. Associated Persons

DTC rules include applicant disqualification criteria for persons and/or entities ''associated'' with an applicant. Because it is not easily ascertainable as to what entities or individuals are ''associated'' with a particular entity, DTC is amending these provisions in its rules so that they are consistent with internal surveillance procedures. DTC is changing references to persons ''associated'' with the applicant to references to ''controlling management,'' which shall be defined to mean the Chief Executive Officer, Chief Financial Officer, and Chief Operating Officer, or their equivalents. These are the officers that are currently screened by DTC's risk management pursuant to internal procedures. DTC is also adding language to its rules that would require applicants to inform DTC as to any member of its controlling management that is or becomes subject to statutory disqualification.

C. Amendment to Willful Violation

DTC rules currently include as a disqualification criterion the applicant's or an associated person's ''willful'' violation of the Securities Act of 1933,[5] the Act, the Investment Company Act of 1940,[6] the Investment Advisors Act of 1940,[7] or any rule or regulation promulgated thereunder. DTC is removing the word ''willful'' from this provision because DTC believes that any violation of these provisions should be a disqualification criterion.

Changes similar to those outlined in Sections A, B, and C above will be made to DTC Rule 10, ''Discretionary Termination.''

III. Discussion

The Commission finds that the proposed rule change is consistent with the requirements of the Act and the rules and regulations thereunder applicable to a registered clearing agency. In particular, the Commission believes the proposal is consistent with the requirements of Section 17A(b)(3)(F),[8] which, among other things, requires that the rules of a clearing agency are designed to remove impediments to and perfect the mechanisms of a national system for the prompt and accurate clearance and settlement of securities transactions and with the requirements of Section 17A(b)(3)(H)[9] which, among other things, requires that the rules of a clearing agency provide a fair procedure with respect to the disciplining of participants and the denial of participation to any person seeking to be a participant. The Commission finds that the proposed rule change, which amends DTC's applicant disqualification criteria contained within its rules, is consistent with those statutory obligations.

IV. Conclusion

On the basis of the foregoing, the Commission finds that the proposal is consistent with the requirements of the Act and in particular with the requirements of Section 17A of the Act[10] and the rules and regulations thereunder.

It is therefore ordered, pursuant to Section 19(b)(2) of the Act,[11] that the proposed rule change (File No. SR–DTC–2007–07) be, and hereby is, approved.[12]

For the Commission by the Division of Trading and Markets, pursuant to delegated authority.[13]

Florence E. Harmon,

Acting Secretary.

[FR Doc. E8–29135 Filed 12–9–08; 8:45 am]

BILLING CODE 8011–01–P

[1] 15 U.S.C. 78s(b)(1).

[2] Securities Exchange Act Release No. 58122 (Jul. 9, 2008), 73 FR 40888.

[3] 15 U.S.C. 78c(a)(39).

[4] As a clearing agency registered under the Act, DTC must evaluate its participants subject to an order of statutory disqualification.

[5] 15 U.S.C. 77a et seq.

[6] 15 U.S.C. 80a–1 et seq.

[7] 15 U.S.C. 80b–1 et seq.

[8] 15 U.S.C. 78q–1(b)(3)(F).

[9] 15 U.S.C. 78q–1(b)(3)(H).

[10] 15 U.S.C. 78q–1.

[11] 15 U.S.C. 78s(b)(2).

[12] In approving the proposed rule change, the Commission considered the proposal's impact on efficiency, competition, and capital formation. 15 U.S.C. 78c(f).

[13] 17 CFR 200.30–3(a)(12).

SECURITIES AND EXCHANGE COMMISSION

[Release No. 34–59043; File No. SR–NASDAQ–2008–089]

Self-Regulatory Organizations; The NASDAQ Stock Market LLC; Notice of Filing and Immediate Effectiveness of Proposed Rule Change To Modify Fees for Members Using the Nasdaq Options Market

December 3, 2008.

Pursuant to Section 19(b)(1) of the Securities Exchange Act of 1934 (''Act'')[1] and Rule 19b–4 thereunder,[2] notice is hereby given that on November 21, 2008, the NASDAQ Stock Market LLC (''Nasdaq'') filed with the Securities and Exchange Commission (''Commission'') the proposed rule change as described in Items I, II, and III below, which Items have been prepared by Nasdaq. Nasdaq has filed

[1] 15 U.S.C. 78s(b)(1).

[2] 17 CFR 240.19b–4.

the proposal pursuant to Section 19(b)(3)(A) of the Act[3] and Rule 19b–4(f)(2) thereunder,[4] which renders the proposal effective upon filing with the Commission. The Commission is publishing this notice to solicit comments on the proposed rule change from interested persons.

I. Self-Regulatory Organization's Statement of the Terms of Substance of the Proposed Rule Change

Nasdaq proposes to modify Rule 7050 governing pricing for Nasdaq members using the NASDAQ Options Market (''NOM''), Nasdaq's facility for executing and routing standardized equity and index options. Specifically, Nasdaq proposes to adopt a credit of $0.35 per executed contract to members who provide liquidity using price-improving orders through NOM. Nasdaq will make the proposed rule change effective on December 1, 2008. The text of the proposed rule change is below. Proposed new language is in italics.[5]

* * * * *

7050. NASDAQ Options Market.

The following charges shall apply to the use of the order execution and routing services of the NASDAQ Options Market by members for all securities.

(1) Fees for Execution of Contracts on the NASDAQ Options Market.

Charge to member entering order that executes in the NASDAQ Options Market: $0.45 per executed contract.

For a pilot period ending July 31, 2009, charge for members or non-members entering order via the Options Intermarket Linkage that executes in the Nasdaq Options Market.

Credit to member providing liquidity through the NASDAQ Options Market: $0.30 per executed contract.

Credit to member providing liquidity using price-improving orders through the NASDAQ Options Market: $0.35 per executed contract.

(2)—(4) No Change.

* * * * *

II. Self-Regulatory Organization's Statement of the Purpose of, and Statutory Basis for, the Proposed Rule Change

In its filing with the Commission, Nasdaq included statements concerning the purpose of and basis for the proposed rule change and discussed any comments it received on the proposed rule change. The text of these statements may be examined at the places specified in Item IV below. Nasdaq has prepared summaries, set forth in Sections A, B, and C below, of the most significant aspects of such statements.

A. Self-Regulatory Organization's Statement of the Purpose of, and Statutory Basis for, the Proposed Rule Change

1. Purpose

Nasdaq is proposing to modify Rule 7050 to allow for a credit of $0.35 per executed contract to members who provide liquidity using price-improving orders through NOM. Currently, members that provide liquidity through NOM receive a credit of $0.30 per executed contract. Nasdaq believes increasing the credit to $0.35 per executed contract for those members that provide liquidity using price-improving orders through NOM should help to encourage additional price improvement, which should in turn, benefit takers of liquidity and investors.

2. Statutory Basis

Nasdaq believes that the proposed rule change is consistent with the provisions of Section 6 of the Act,[6] in general, and with Section 6(b)(4) of the Act,[7] in particular, in that it provides for the equitable allocation of reasonable dues, fees and other charges among members and issuers and other persons using any facility or system which Nasdaq operates or controls. Nasdaq believes that the proposed credit should encourage additional price improvement which should, in turn, benefit takers of liquidity and investors in general.

B. Self-Regulatory Organization's Statement on Burden on Competition

Nasdaq does not believe that the proposed rule change will result in any burden on competition that is not necessary or appropriate in furtherance of the purposes of the Act, as amended. To the contrary, Nasdaq has designed its fees to compete effectively for the execution and routing of options contracts and to reduce the overall cost to investors of options trading.

C. Self-Regulatory Organization's Statement on Comments on the Proposed Rule Change Received From Members, Participants or Others

Written comments were neither solicited nor received.

III. Date of Effectiveness of the Proposed Rule Change and Timing for Commission Action

The foregoing rule change has become effective pursuant to Section 19(b)(3)(A)(ii) of the Act[8] and subparagraph (f)(2) of Rule 19b–4 thereunder.[9]

At any time within 60 days of the filing of the proposed rule change, the Commission may summarily abrogate such rule change if it appears to the Commission that such action is necessary or appropriate in the public interest, for the protection of investors, or otherwise in furtherance of the purposes of the Act.

IV. Solicitation of Comments

Interested persons are invited to submit written data, views, and arguments concerning the foregoing, including whether the proposed rule change is consistent with the Act. Comments may be submitted by any of the following methods:

Electronic Comments

- Use the Commission's Internet comment form (*http://www.sec.gov/rules/sro.shtml*); or
- Send an e-mail to *rule-comments@sec.gov*. Please include File Number SR–NASDAQ–2008–089 on the subject line.

Paper Comments

- Send paper comments in triplicate to Secretary, Securities and Exchange Commission, 100 F Street, NE., Washington, DC 20549–1090.

All submissions should refer to File Number SR–NASDAQ–2008–089. This file number should be included on the subject line if e-mail is used. To help the Commission process and review your comments more efficiently, please use only one method. The Commission will post all comments on the Commission's Internet Web site (*http://www.sec.gov/rules/sro.shtml*). Copies of the submission, all subsequent amendments, all written statements with respect to the proposed rule change that are filed with the Commission, and all written communications relating to the proposed rule change between the Commission and any person, other than those that may be withheld from the public in accordance with the provisions of 5 U.S.C. 552, will be available for inspection and copying in the Commission's Public Reference Room, 100 F Street, NE., Washington,

[3] 15 U.S.C. 78s(b)(3)(A).

[4] 17 CFR 240.19b–4(f)(2).

[5] Changes are marked to the rule text that appears in the electronic Nasdaq Manual found at *http://nasdaqomx.cchwallstreet.com*.

[6] 15 U.S.C. 78f.

[7] 15 U.S.C. 78f(b)(4).

[8] 15 U.S.C. 78s(b)(3)(a)(ii).

[9] 17 CFR 240.19b–4(f)(2).

DC 20549, on official business days between the hours of 10 a.m. and 3 p.m. Copies of the filing also will be available for inspection and copying at the principal office of Nasdaq. All comments received will be posted without change; the Commission does not edit personal identifying information from submissions. You should submit only information that you wish to make available publicly. All submissions should refer to File Number SR–NASDAQ–2008–089 and should be submitted on or before December 31, 2008.

For the Commission, by the Division of Trading and Markets, pursuant to delegated authority.[10]

Florence E. Harmon,

Acting Secretary.

[FR Doc. E8–29136 Filed 12–9–08; 8:45 am]

BILLING CODE 8011–01–P

SMALL BUSINESS ADMINISTRATION

SBA North Florida District Advisory Council

AGENCY: U.S. Small Business Administration.

ACTION: Notice of open Federal advisory committee meeting.

SUMMARY: The SBA is issuing this notice to announce the location, date, time, and agenda for the next meeting of the SBA North Florida District Advisory Council. The meeting will be open to the public.

DATES: The meeting will be held on Tuesday, January 27th, 2009 from 12 p.m. to 2 p.m. Eastern Standard Time.

ADDRESSES: The meeting will be held at the Hilton Garden Inn, 145 Park Avenue, Orange Park, Florida, USA 32073.

SUPPLEMENTARY INFORMATION: Pursuant to section 10(a)(2) of the Federal Advisory Committee Act (5 U.S.C., Appendix 2), SBA announces the meeting of the SBA North Florida District Advisory Council. The SBA North Florida District Advisory Council is tasked with providing advice and opinions to SBA regarding the effectiveness of and need for SBA programs, particularly within North Florida and for listening to what is currently happening in the Florida small business community.

The purpose of the meeting is to discuss with the council the current status of small business across North Florida and to discuss the agency status through the transition period after the Presidential Inauguration. The agenda includes: an overview of the status of the SBA as an agency from Wilfredo J. Gonzalez, SBA District Director as well as a luncheon/meeting to hear from the members of the council and to hear from the SBA staff on SBA updates for the District.

FOR FURTHER INFORMATION CONTACT: The meeting is open to the public however advance notice of attendance is requested. Anyone wishing to attend and/or make a presentation to the SBA North Florida District Advisory Council must contact Lola Kress Naylor by January 20th, 2009, by fax or e-mail in order to be placed on the agenda. Lola Kress Naylor, Business Development Specialist, SBA North Florida District Office, *lola.naylor@sba.gov*, (904) 443–1933, fax (202) 481–4188.

Additionally, if you need accommodations because of a disability or require additional information, please contact Lola Kress Naylor, Business Development Specialist, SBA North Florida District Office, *lola.naylor@sba.gov*, (904) 443–1933.

Cherylyn Lebon,

SBA Committee Management Officer.

[FR Doc. E8–29198 Filed 12–9–08; 8:45 am]

BILLING CODE 8025–01–P

DEPARTMENT OF STATE

[Public Notice 6447]

Public Hearings on Study of Critical Sources of Phosphorus Loadings to Missisquoi Bay

The International Joint Commission (the Commission) will launch its study of phosphorus loadings to Missisquoi Bay on Lake Champlain by holding public hearings, at the times and locations listed below.

In August of this year, the Canadian and United States federal governments asked the Commission to help them coordinate initiatives in both countries to reduce phosphorus loadings to Missisquoi Bay. Recognizing the recent advances made by the Province of Quebec, the governments asked the Commission to help develop complementary measures in the U.S. portion of the basin, in close partnership with the Lake Champlain Basin Program.

In October, the Commission appointed the International Missisquoi Bay Study Board to help it carry out this request. The public is invited to meet the members of the Study Board and provide comments on sources of phosphorus loadings and any other matters that the Study Board should consider.

The hearings will be held at the following times and locations:

December 15, 2008, 7 p.m. to 9 p.m., Village of Swanton Office, 120 First Street, Swanton, Vermont.

December 16, 2008, 7 p.m. to 9 p.m., Centre des loisirs, 1 Tourangeau Street, Saint-Georges-de-Clarenceville, Quebec.

Written comments may also be submitted for receipt by January 5, 2009, at either address below:

U.S. Section Secretary, International Joint Commission, 2401 Pennsylvania Avenue, NW.

Canadian Section Secretary, International Joint Commission, 234 Laurier Avenue, NW.

4th Floor, Washington, DC 20440, Fax: 202–254–4562, E-mail: *Commission@washington.ijc.org.*

22nd Floor, Ottawa, Ontario K1P 6K6, Fax: 613–993–5583, E-mail: *Commission@ottawa.ijc.org.*

The International Joint Commission is an international Canada-United States organization established by the Boundary Waters Treaty of 1909. It assists the governments in managing waters along the border for the benefit of both countries in a variety of ways including examining issues referred to it by the two federal governments.

The full text of the letter of reference from the governments to the Commission and the directive from the Commission to its Study Board may be found on the Commission's Web site at *http://www.ijc.org.*

Dated: December 3, 2008.

Charles A. Lawson,

Secretary, United States Section, International Joint Commission, Department of State.

[FR Doc. E8–29212 Filed 12–9–08; 8:45 am]

BILLING CODE 4710–14–P

DEPARTMENT OF TRANSPORTATION

Federal Motor Carrier Safety Administration

[FMCSA Docket No. FMCSA–2008–0293]

Qualification of Drivers; Exemption Applications; Diabetes

AGENCY: Federal Motor Carrier Safety Administration (FMCSA), DOT.

ACTION: Notice of final disposition.

SUMMARY: FMCSA announces its decision to exempt thirty-nine individuals from its rule prohibiting persons with insulin-treated diabetes mellitus (ITDM) from operating commercial motor vehicles (CMVs) in

[10] 17 CFR 200.30–3(a)(12).

interstate commerce. The exemptions will enable these individuals to operate CMVs in interstate commerce.

DATES: The exemptions are effective December 10, 2008. The exemptions expire on December 10, 2010.

FOR FURTHER INFORMATION CONTACT: Dr. Mary D. Gunnels, Director, Medical Programs, (202) 366–4001, *fmcsamedical@dot.gov*, FMCSA, Room W64–224, Department of Transportation, 1200 New Jersey Avenue, SE., Washington, DC 20590–0001. Office hours are from 8:30 a.m. to 5 p.m., Monday through Friday, except Federal holidays.

SUPPLEMENTARY INFORMATION:

Electronic Access

You may see all the comments online through the Federal Document Management System (FDMS) at: *http://www.regulations.gov*.

Docket: For access to the docket to read background documents or comments, go to *http://www.regulations.gov* and/or Room W12–140 on the ground level of the West Building, 1200 New Jersey Avenue, SE., Washington, DC, between 9 a.m. and 5 p.m., Monday through Friday, except Federal holidays.

Privacy Act: Anyone may search the electronic form of all comments received into any of DOT's dockets by the name of the individual submitting the comment (or of the person signing the comment, if submitted on behalf of an association, business, labor union, or other entity). You may review DOT's complete Privacy Act Statement in the **Federal Register** (65 FR 19476, Apr. 11, 2000). This statement is also available at *http://Docketsinfo.dot.gov*.

Background

On October 22, 2008, FMCSA published a notice announcing receipt of applications for exemption from the Federal diabetes standard from thirty-nine individuals, and requested comments from the public (73 FR 63042). The public comment period closed on November 22, 2008, and no comments were received.

FMCSA has evaluated the eligibility of the thirty-nine applicants and determined that granting the exemptions to these individuals would achieve a level of safety equivalent to, or greater than, the level that would be achieved by complying with the current regulation 49 CFR 391.41(b)(3).

Diabetes Mellitus and Driving Experience of the Applicants

The Agency established the current standard for diabetes in 1970 because several risk studies indicated that diabetic drivers had a higher rate of crash involvement than the general population. The diabetes rule provides that ''A person is physically qualified to drive a commercial motor vehicle if that person has no established medical history or clinical diagnosis of diabetes mellitus currently requiring insulin for control'' (49 CFR 391.41(b)(3)).

FMCSA established its diabetes exemption program, based on the Agency's July 2000 study entitled ''A Report to Congress on the Feasibility of a Program to Qualify Individuals with Insulin-Treated Diabetes Mellitus to Operate in Interstate Commerce as Directed by the Transportation Act for the 21st Century.'' The report concluded that a safe and practicable protocol to allow some drivers with ITDM to operate CMVs is feasible. The 2003 Notice (68 FR 52442) in conjunction with the November 8, 2005 (70 FR 67777) **Federal Register** Notice provides the current protocol for allowing such drivers to operate CMVs in interstate commerce.

These thirty-nine applicants have had ITDM over a range of 1 to 48 years. These applicants report no hypoglycemic reaction that resulted in loss of consciousness or seizure, that required the assistance of another person, or that resulted in impaired cognitive function without warning symptoms in the past 5 years (with one year of stability following any such episode). In each case, an endocrinologist has verified that the driver has demonstrated willingness to properly monitor and manage his or her diabetes, received education related to diabetes management, and is on a stable insulin regimen. Each driver reports no other disqualifying conditions, including diabetes-related complications. Each meets the vision standard at 49 CFR 391.41(b)(10).

The qualifications and medical condition of each applicant were stated and discussed in detail in the October 22, 2008, **Federal Register** Notice (73 FR 63042). Therefore, they will not be repeated in this notice.

Basis for Exemption Determination

Under 49 U.S.C. 31136(e) and 31315, FMCSA may grant an exemption from the diabetes standard in 49 CFR 391.41(b)(3) if the exemption is likely to achieve an equivalent or greater level of safety than would be achieved without the exemption. The exemption allows the applicants to operate CMVs in interstate commerce.

To evaluate the effect of these exemptions on safety, FMCSA considered medical reports about the applicants' ITDM and vision and reviewed the treating endocrinologist's medical opinion related to the ability of the driver to safely operate a CMV while using insulin.

Consequently, FMCSA finds that exempting these applicants from the diabetes standard in 49 CFR 391.41(b)(3) is likely to achieve a level of safety equal to that existing without the exemption.

Conditions and Requirements

The terms and conditions of the exemption will be provided to the applicants in the exemption document and they include the following: (1) That each individual submits to FMCSA a quarterly monitoring checklist completed by the treating endocrinologist as well as an annual checklist with a comprehensive medical evaluation; (2) that each individual reports to FMCSA within 2 business days of occurrence, all episodes of severe hypoglycemia, significant complications, or inability to manage diabetes; also, any involvement in an accident or any other adverse event in a CMV or personal vehicle, whether or not they are related to an episode of hypoglycemia; (3) that each individual provide a copy of the ophthalmologist's or optometrist's report to the medical examiner at the time of the annual medical examination; and (4) that each individual provide a copy of the annual medical certification to the employer for retention in the driver's qualification file, or keep a copy in his/her driver's qualification file if he/she is self-employed. The driver must also have a copy of the certification when driving, for presentation to a duly authorized Federal, State, or local enforcement official.

Discussion of Comments

FMCSA received no comments in this proceeding.

Conclusion

After considering the comments to the docket, and based upon its evaluation of the thirty-nine exemption applications, FMCSA exempts, Charles J. Berg, Donavan A. Bloomfield, Ronald G. Breunig, Gary H. Cooper, Douglas M. Crafton, Herschel J. Crawford, Ernest A. Emery, David L. Farran, Christopher S. Fox, James E. Gaines, Terry D. Garner, Mitchell P. Gibson, Allan D. Gralapp, Scott L. Halm, Joseph M. Hengel, Clinton J. Herrold, Brent L. Kreder, Reid T. Massey, Aaron R. Matkowski, Larry E. Mellinger, Mark P. Moots, Darryl W. Nelson, Barry L. Paul, Thomas P. Quinlivan, Mark L. Rigby, Dale A. Roberts, Rhonda G. Sandersfeld, Robert

M. Schulz, Jason P. Smith, Joel C. Smith, Dean A. Sullivan, James O. Teague, Lawrence W. Thomas, Jack D. Thorpe, Robert J. Vance, John R. Watson, John A. Witt, John J. Wojcik, Jr., and Raymond W. Zimmerman, Jr., from the ITDM standard in 49 CFR 391.41(b)(3), subject to the conditions listed under ''Conditions and Requirements'' above.

In accordance with 49 U.S.C. 31136(e) and 31315 each exemption will be valid for two years unless revoked earlier by FMCSA. The exemption will be revoked if: (1) The person fails to comply with the terms and conditions of the exemption; (2) the exemption has resulted in a lower level of safety than was maintained before it was granted; or (3) continuation of the exemption would not be consistent with the goals and objectives of 49 U.S.C. 31136(e) and 31315. If the exemption is still effective at the end of the 2-year period, the person may apply to FMCSA for a renewal under procedures in effect at that time.

Issued on: December 3, 2008.

Larry W. Minor,

Associate Administrator for Policy and Program Development.

[FR Doc. E8–29189 Filed 12–9–08; 8:45 am]

BILLING CODE 4910–EX–P

DEPARTMENT OF TRANSPORTATION

Federal Motor Carrier Safety Administration

[Docket No. FMCSA–2008–0355]

Qualification of Drivers; Exemption Applications; Epilepsy and Seizure Disorders

AGENCY: Federal Motor Carrier Safety Administration (FMCSA), DOT.

ACTION: Notice of applications for exemption, request for comments.

SUMMARY: FMCSA announces receipt of applications from fifteen individuals for an exemption from the prohibition against persons with a clinical diagnosis of epilepsy (or any other condition which is likely to cause a loss of consciousness or any loss of ability to operate a commercial motor vehicle (CMV)) from operating CMVs in interstate commerce. If granted, the exemptions would enable these individuals with seizure disorders to operate CMVs in interstate commerce.

DATES: Comments must be received on or before January 9, 2009.

ADDRESSES: You may submit comments bearing the Federal Docket Management System (FDMS) Docket ID FMCSA–2008–0355 using any of the following methods:

- *Federal eRulemaking Portal:* Go to *http://www.regulations.gov.* Follow the on-line instructions for submitting comments.
- *Mail:* Docket Management Facility; U.S. Department of Transportation, 1200 New Jersey Avenue, SE., West Building Ground Floor, Room W12–140, Washington, DC 20590–0001.
- *Hand Delivery:* West Building Ground Floor, Room W12–140, 1200 New Jersey Avenue, SE., Washington, DC, between 9 a.m. and 5 p.m., Monday through Friday, except Federal holidays.
- *Fax:* 1–202–493–2251.

Each submission must include the Agency name and the docket ID for this Notice. Note that DOT posts all comments received without change to *http://www.regulations.gov,* including any personal information included in a comment. Please see the Privacy Act heading below.

Docket: For access to the docket to read background documents or comments, go to *http://www.regulations.gov* at any time or Room W12–140 on the ground level of the West Building, 1200 New Jersey Avenue, SE., Washington, DC, between 9 a.m. and 5 p.m., Monday through Friday, except Federal holidays. The FDMS is available 24 hours each day, 365 days each year. If you want acknowledgment that we received your comments, please include a self-addressed, stamped envelope or postcard or print the acknowledgment page that appears after submitting comments on-line.

Privacy Act: Anyone may search the electronic form of all comments received into any of our dockets by the name of the individual submitting the comment (or of the person signing the comment, if submitted on behalf of an association, business, labor union, etc.). You may review the DOT's complete Privacy Act Statement in the **Federal Register** published on April 11, 2000 (65 FR 19477–78; Apr. 11, 2000). This information is also available at *http://Docketinfo.dot.gov.*

FOR FURTHER INFORMATION CONTACT: Dr. Mary D. Gunnels, Director, Medical Programs, (202) 366–4001, *fmcsamedical@dot.gov,* FMCSA, Room W64–224, Department of Transportation, 1200 New Jersey Avenue, SE., Washington, DC 20590–0001. Office hours are from 8:30 a.m. to 5 p.m., Monday through Friday, except Federal holidays.

SUPPLEMENTARY INFORMATION:

Background

Under 49 U.S.C. 31315 and 31136(e), FMCSA may grant an exemption for a 2-year period if it finds ''such exemption would likely achieve a level of safety that is equivalent to, or greater than, the level that would be achieved absent such exemption.'' The statutes also allow the Agency to renew exemptions at the end of the 2-year period. The fifteen individuals listed in this notice have recently requested an exemption from the epilepsy prohibition in 49 CFR 391.41(b)(8), which applies to drivers who operate CMVs as defined in 49 CFR 390.5, in interstate commerce. Section 391.41(b)(8) states that a person is physically qualified to drive a commercial motor vehicle if that person has no established medical history or clinical diagnosis of epilepsy or any other condition which is likely to cause the loss of consciousness, or any loss of ability to control a commercial motor vehicle.

FMCSA provides medical advisory criteria for use by medical examiners in determining whether drivers with certain medical conditions should be certified to operate commercial motor vehicles in intrastate commerce. The advisory criteria indicates that if an individual has had a sudden episode of a nonepileptic seizure or loss of consciousness of unknown cause which did not require antiseizure medication, the decision whether that person's condition is likely to cause the loss of consciousness or loss of ability to control a commercial motor vehicle should be made on an individual basis by the medical examiner in consultation with the treating physician. Before certification is considered, it is suggested that a 6-month waiting period elapse from the time of the episode. Following the waiting period, it is suggested that the individual have a complete neurological examination. If the results of the examination are negative and antiseizure medication is not required, then the driver may be qualified.

In those individual cases where a driver had a seizure or an episode of loss of consciousness that resulted from a known medical condition (e.g., drug reaction, high temperature, acute infectious disease, dehydration, or acute metabolic disturbance), certification should be deferred until the driver has fully recovered from that condition, has no existing residual complications, and is not taking antiseizure medication.

Drivers with a history of epilepsy/seizures off antiseizure medication and seizure-free for 10 years may be qualified to operate a CMV in interstate

commerce. Interstate drivers with a history of a single unprovoked seizure may be qualified to drive a CMV in interstate commerce if seizure-free and off antiseizure medication for a 5-year period or more.

Summary of Application

Daniel Beeson

Mr. Beeson is a CMV driver in the state of Indiana. He was diagnosed with epilepsy in 1988, and is currently taking anti-seizure medication (Dilantin). He was put on Dilantin when first diagnosed and has been on it ever since. His neurologist certified that he has maintained good medication control and is monitored frequently for Dilantin levels. Mr. Beeson believes that he would achieve a level of safety that is equivalent to the level of safety obtained by complying with the regulation because he has remained seizure-free on anti-seizure medication for 17 years.

Terrance W. Clawson

Mr. Clawson is a CMV driver in the state of West Virginia. He states that he was diagnosed with epilepsy in 1970 and has been off anti-seizure medication since 2002. His neurologist certified that he has been seizure-free for thirty-four years and is clearly safe to drive. Mr. Clawson believes that he would achieve a level of safety that is equivalent to the level of safety obtained by complying with the regulation because he has remained seizure-free for 35 years and has been off anti-seizure medication since 2002.

John M. Dobrowlski

Mr. Dobrowlski is a CMV driver in the state of Delaware. He states that he has a seizure disorder and is currently taking anti-seizure medication (Keppra). His doctor certified that he has been seizure-free for twenty-two years on his current dose of medication. Mr. Dobrowlski believes that he would achieve a level of safety that is equivalent to the level of safety obtained by complying with the regulation because he has remained seizure-free since 1985 and has an excellent driving record. Mr. Dobrowlski currently has a state waiver from Delaware.

Daniel Forth

Mr. Forth is a CMV driver in the state of New York. He was diagnosed with seizure disorder in 1979 disorder, and is currently taking anti-seizure medication (Tergretol). His doctor certified that he has been seizure-free for 27 years on his current dose of medication. Mr. Forth believes that he would achieve a level of safety that is equivalent to the level of safety obtained by complying with the regulation because he has maintained good medication control and has remained seizure-free for 28 years.

Garry A. Gantle

Mr. Gantle is a CMV driver in the state of New York. He was diagnosed with epilepsy in 1980 and is currently taking anti-seizure medication (Zonegran). His neurologist certified that his seizure is well controlled. Mr. Gantle believes that he would achieve a level of safety that is equivalent to the level of safety obtained by complying with the regulation because he has remained seizure-free on anti-seizure medication for 8 years.

Steve L. Hunsaker

Mr. Hunsaker is a CMV driver in the state of Idaho. He has a history of nocturnal seizures and is currently taking anti-seizure medication (Dilantin). His doctor certified that he has been seizure-free for eighteen years on his current dose of medication. Mr. Hunsaker believes that he would achieve a level of safety that is equivalent to the level of safety obtained by complying with the regulation because he has maintained good medication control and has remained seizure-free for 18 years.

Eric Jedrewski

Mr. Jedrewski is a CMV driver in the state of Ohio. He was diagnosed with epilepsy in 1972, and is currently taking anti-seizure medication (Dilantin and Phenobarbital). His neurologist certified that he is extremely stable and there is no need for restrictions in any potential job duties. Mr. Jedrewski believes that he would achieve a level of safety that is equivalent to the level of safety obtained by complying with the regulation because he has remained seizure-free on anti-seizure medication for 32 years.

Shane Klementis

Mr. Klementis is a CMV driver in the state of New York. He was diagnosed with epilepsy in 1982 and is currently taking anti-seizure medication (Dilantin). His neurologist certified that his seizure disorder is well controlled. Mr. Klementis believes that he would achieve a level of safety that is equivalent to the level of safety obtained by complying with the regulation because he has remained seizure-free on anti-seizure medication for 17 years.

Humberto Ortiz

Mr. Ortiz is an electrician in the state of Illinois. He was diagnosed with epilepsy in 2001 and is currently taking anti-seizure medication (Topamax). His neurologist certified that his seizure disorder is well controlled. Mr. Ortiz believes that he would achieve a level of safety that is equivalent to the level of safety obtained by complying with the regulation because he has remained seizure-free on anti-seizure medication for 7 years.

Austin Prince, Jr.

Mr. Prince is a CMV driver in the state of Ohio. He was diagnosed with epilepsy in 1974 and is currently taking anti-seizure medication (Dilantin). His neurologist certified that he has been under good control and continues to follow up for frequent monitoring of Dilantin levels; he also states that Mr. Prince is safe to drive commercially. Mr. Prince believes that he would achieve a level of safety that is equivalent to the level of safety obtained by complying with the regulation because he has remained seizure-free on anti-seizure medication for 16 years.

Jerry L. Reeder

Mr. Reeder is a CMV driver in the state of Texas. He was diagnosed with epilepsy in 1994 and is currently taking anti-seizure medication (Carbamazepine). His neurologist certified that he has not had a seizure since 1998 and has maintained good compliance with taking the medication. Mr. Reeder believes that he would achieve a level of safety that is equivalent to the level of safety obtained by complying with the regulation because he has remained seizure-free on anti-seizure medication for 10 years.

Scott M. Rohlinger

Mr. Rohlinger is a CMV driver in the state of Wisconsin. He was diagnosed in 1987 and took anti-seizure medication (Dilantin) for twenty one years. Twenty years ago, Mr. Rohlinger was involved in a motor vehicle accident that was linked to a possible seizure episode. His doctor certified that there were no seizure experiences prior to that, or following that event. Mr. Rohlinger believes that he would achieve a level of safety that is equivalent to the level of safety obtained by complying with the regulation because he has remained seizure-free for 21 years. His doctor has certified that he may have never experienced a seizure.

Anthony Ross

Mr. Ross is a CMV driver in the state of Illinois, trying to acquire a CDL. He has a history of nocturnal seizures; diagnosed in 2001. He is currently on anti-seizure medication (Dilantin). According to his neurologist, his last

seizure was in 2004. Mr. Ross believes that he would achieve a level of safety that is equivalent to the level of safety obtained by complying with the regulation because his seizure disorder is well controlled with his current medication. His doctor certified that while on medication, he is medically fit to drive.

Travis Williams

Mr. Williams is a CMV driver in the state of Louisiana. He was diagnosed with epilepsy in 1996 and is currently taking anti-seizure medication (Depakote). His neurologist certified that his seizure disorder is well controlled. Mr. Williams believes that he would achieve a level of safety that is equivalent to the level of safety obtained by complying with the regulation because he has remained seizure-free on anti-seizure medication for 12 years.

John B. Yates

Mr. Yates is a CMV driver in the state of West Virginia. He has a history of seizures diagnosed in 1976. He is currently on anti-seizure medication (Depokota). According to his neurologist, his last seizure was in 1982. Mr. Yates believes that he would achieve a level of safety that is equivalent to the level of safety obtained by complying with the regulation because he has not had a seizure in 26 years while on medication.

Request for Comments

In accordance with 49 U.S.C. 31315 and 31136(e), FMCSA requests public comment from all interested persons on the exemption application described in this notice. We will consider all comments received before the close of business on the closing date indicated earlier in the notice.

Issued on: December 3, 2008.

Larry W. Minor,

Associate Administrator for Policy and Program Development.

[FR Doc. E8–29188 Filed 12–9–08; 8:45 am]

BILLING CODE 4910–EX–P

DEPARTMENT OF TRANSPORTATION

Federal Railroad Administration

Proposed Agency Information Collection Activities; Comment Request

AGENCY: Federal Railroad Administration, DOT.

ACTION: Notice and request for comments.

SUMMARY: In compliance with the Paperwork Reduction Act of 1995 (44 U.S.C. 3501 *et seq.*), this notice announces that the Information Collection Requirements (ICRs) abstracted below have been forwarded to the Office of Management and Budget (OMB) for review and comment. Each ICR describes the nature of the information collection and its expected burden. The **Federal Register** notice with a 60-day comment period soliciting comments on the collection of information listed below was published on October 2, 2008 (*See* 73 FR 57404).

DATES: Comments must be submitted on or before January 9, 2009.

FOR FURTHER INFORMATION CONTACT: Mr. Robert Brogan, Office of Planning and Evaluation Division, RRS–21, Federal Railroad Administration, 1200 New Jersey Ave., SE., Mail Stop 25, Washington, DC 20590 (telephone: (202) 493–6292), or Ms. Nakia Jackson, Office of Information Technology, RAD–20, Federal Railroad Administration, 1200 New Jersey Ave., SE., Mail Stop 35, Washington, DC 20590 (telephone: (202) 493–6073). (These telephone numbers are not toll-free.)

SUPPLEMENTARY INFORMATION: The Paperwork Reduction Act of 1995 (PRA), Public Law No. 104–13, § 2, 109 Stat. 163 (1995) (codified as revised at 44 U.S.C. 3501–3520), and its implementing regulations, 5 CFR Part 1320, require Federal agencies to issue two notices seeking public comment on information collection activities before OMB may approve paperwork packages. 44 U.S.C. 3506, 3507; 5 CFR 1320.5, 1320.8(d)(1), 1320.12. On October 2, 2008, FRA published a 60-day notice in the **Federal Register** soliciting comment on ICRs that the agency was seeking OMB approval. 73 FR 57404. FRA received one letter in response to this notice.

The letter came from Mr. Freddie Simpson, President of the Brotherhood of Maintenance of Way Employes Division (BMWED). The BMWED is a labor organization representing approximately 35,000 railroad workers who build, maintain, inspect, and repair railroad tracks, bridges, and related railroad infrastructure throughout the United States. In his comments, Mr. Simpson noted the following:

> BMWED is a charter member of the Rail Safety Advisory Committee (RSAC) and a voting member of the RSAC Railroad Bridge Working Group (RBWG). The RBWG is tasked by FRA to ''report to the Federal Railroad Administration on the current state of Railroad bridge safety management, updating the findings and conclusions of the 1993 Summary Report of the FRA Railroad Bridge Safety Survey, including recommendations for further action.''
>
> BMWED believes the information collection activities outlined in the *OMB Control Number 2130—New* are necessary for FRA and RBWG to properly execute its functions. BMWED also believes the information collection activities will have practical utility in assessing the current state of railroad bridge safety management and that the anticipated surveys and evaluations of selected railroad bridge management programs is vital to such assessment. Finally, BMWED believes FRA's estimates of the burden of such information collection activities are reasonable, sound, and minimally burdensome.

The information to be collected and weighting factors to be applied thereupon are presently being reviewed by the American Short Line and Regional Railroad Association (ASLRRA) Bridge Committee. This committee is composed of the chief bridge engineers from the seven Class I railroads and Amtrak, representatives of Class II regional and Class III shot line railroads, consulting engineers, and industry suppliers. FRA will consider the recommendations of the ASLRRA Bridge Committee in this regard.

Before OMB decides whether to approve this proposed collection of information, it must provide 30 days for public comment. 44 U.S.C. 3507(b); 5 CFR 1320.12(d). Federal law requires OMB to approve or disapprove paperwork packages between 30 and 60 days after the 30 day notice is published. 44 U.S.C. 3507 (b)–(c); 5 CFR 1320.12(d); see also 60 FR 44978, 44983, Aug. 29, 1995. OMB believes that the 30 day notice informs the regulated community to file relevant comments and affords the agency adequate time to digest public comments before it renders a decision. 60 FR 44983, Aug. 29, 1995. Therefore, respondents should submit their respective comments to OMB within 30 days of publication to best ensure having their full effect. 5 CFR 1320.12(c); *see also* 60 FR 44983, Aug. 29, 1995.

The summaries below describe the nature of the information collection requirements (ICRs) and the expected burden. The proposed requirements are being submitted for clearance by OMB as required by the PRA.

Title: Factors for Selection of Railroads for Evaluation of Bridge Management Practices.

OMB Control Number: 2130—New.

Type of Request: Regular approval of a proposed collection of information.

Affected Public: Railroads.

Form(s): FRA F 6180.129.

Abstract: The Federal Railroad Administration (FRA) has conducted a Railroad Bridge Safety Program at various levels of effort ever since the enactment of the Railroad Safety Act of

1970. FRA is authorized under that act to issue regulations addressing a wide variety of subjects regarding railroad safety, but FRA has found that bridge safety has been well served by a non-regulatory policy.

The resulting Statement of Agency Policy on the Safety of Railroad Bridges, published in the **Federal Register** in 2000, is based on the findings of a survey conducted by FRA in 1992 and 1993. That survey showed that a large majority of railroads were managing their bridges in a manner which promoted the immediate safety of those bridges. FRA therefore adopted that Bridge Safety Policy, which incorporates non-regulatory guidelines. The non-regulatory guidelines of the Bridge Safety Policy are promulgated as Appendix C of the Federal Track Safety Standards, Title 49 Code of Federal Regulations, Part 213.

Since the initial bridge management survey was completed, FRA has continued to conduct evaluations of the bridge management practices of the Nation's railroads. Regular, continuing contact has been in place between FRA and the larger railroads (Class I and major passenger carriers). However, the selection of smaller railroads (Class III short lines and smaller Class II regional railroads) has been on an ad hoc basis. FRA has based decisions to evaluate individual smaller railroads on recommendations from FRA regional staff, complaints from the public, and the small number of bridge-related train accidents.

The Government Accountability Office (GAO) in 2006 and 2007 conducted a study to evaluate the safety and serviceability of our Nation's railroad bridges and tunnels. GAO reported to the Congress on that study in August 2007. That report, ''RAILROAD BRIDGES AND TUNNELS—Federal Role in Providing Safety Oversight and Freight Infrastructure Investment Could Be Better Targeted'' includes the following recommendation:

> To enhance the effectiveness of its bridge and tunnel safety oversight function, we recommend that the Secretary of Transportation direct the Administrator of the Federal Railroad Administration to devise a systematic, consistent, risk-based methodology for selecting railroads for its bridge safety surveys to ensure that it includes railroads that are at higher risk of not following the FRA's bridge safety guidelines and of having bridge and tunnel safety issues.

FRA agrees with that recommendation, and is implementing it.

A vital part of that methodology is the development of information on which to base the factors by which railroads will be selected for surveys and evaluations. The factors developed by FRA, in conjunction with the railroads themselves, include such statistics as the length of a railroad in miles, the number, types and total length of its bridges, its level of traffic, the presence of hazardous material traffic, the operation of passenger trains, and the railroad's record of train accidents. Several of those factors, particularly regarding the railroad's bridge population, are not found in data already held or collected by FRA.

An attempt to characterize the selection factors without incorporating that data on a railroad's bridge population would seriously compromise the accuracy and usefulness of the information. FRA has, therefore, determined that the effectiveness of its bridge safety program depends on this data, and has identified two options for collecting it. In one case, FRA inspectors could visit each railroad in turn, interview the managers of the railroad, and record the information presented. In the other case, FRA could request that each railroad provide its data to FRA in a convenient format.

FRA believes that the second option, self-reporting by the railroads, is more convenient for the responding universe, and that it represents the most efficient use of agency resources. Railroad managers will be able to gather the data on their own time schedules, within reason, and FRA would not have to devote employee time and travel expenses to visit the responding railroads.

FRA will use the data received in this project to rank individual railroads for scheduling bridge program evaluations by FRA's Bridge Safety Staff. The data will be analyzed against weighting factors, and railroads will be prioritized according to the resulting scores. The weighting factors are presently being reviewed by a committee of the American Short Line and Regional Railroad Association (ASLRRA). FRA will consider the recommendation of ASLRRA in this regard, and will make the weighting factors available to the respondent universe and the public as part of this project.

It should be noted that a high selection ranking of any railroad by FRA will not necessarily indicate that the railroad has a bridge safety problem. That determination, one way or the other, will only be made by FRA during its evaluation of that railroad's bridge management practices.

Annual Estimated Burden: 1,500 hours.

Addressee: Send comments regarding these information collections to the Office of Information and Regulatory Affairs, Office of Management and Budget, 725 Seventeenth Street, NW., Washington, DC 20503; Attention: FRA Desk Officer. Comments may also be sent via e-mail to the Office of Information and Regulatory Affairs (OIRA) of the Office of Management and Budget at the following address: *oira_submissions@omb.eop.gov*.

Comments are invited on the following: Whether the proposed collections of information are necessary for the proper performance of the functions of FRA, including whether the information will have practical utility; the accuracy of FRA's estimates of the burden of the proposed information collections; ways to enhance the quality, utility, and clarity of the information to be collected; and ways to minimize the burden of the collections of information on respondents, including the use of automated collection techniques or other forms of information technology.

A comment to OMB is best assured of having its full effect if OMB receives it within 30 days of publication of this notice in the **Federal Register**.

Authority: 44 U.S.C. 3501–3520.

Issued in Washington, DC on December 3, 2008.

Martin J. Eble,

Acting Director, Office of Financial Management, Federal Railroad Administration.

[FR Doc. E8–29036 Filed 12–9–08; 8:45 am]

BILLING CODE 4910–06–P

DEPARTMENT OF TRANSPORTATION

Federal Railroad Administration

Proposed Agency Information Collection Activities; Comment Request

AGENCY: Federal Railroad Administration, DOT.

ACTION: Notice and request for comments.

SUMMARY: In compliance with the Paperwork Reduction Act of 1995 (44 U.S.C. 3501 *et seq.*), this notice announces that the Information Collection Requirements (ICRs) abstracted below have been forwarded to the Office of Management and Budget (OMB) for review and comment. Each ICR describes the nature of the information collection and its expected burden. The **Federal Register** notice with a 60-day comment period soliciting comments on the collection of information listed below was published

on September 25, 2008 (*See* 73 FR 55589).

DATES: Comments must be submitted on or before January 9, 2009.

FOR FURTHER INFORMATION CONTACT: Mr. Robert Brogan, Office of Planning and Evaluation Division, RRS–21, Federal Railroad Administration, 1200 New Jersey Ave., SE., Mail Stop 25, Washington, DC 20590 (telephone: (202) 493–6292), or Ms. Nakia Jackson, Office of Information Technology, RAD–20, Federal Railroad Administration, 1200 New Jersey Ave., SE., Mail Stop 35, Washington, DC 20590 (telephone: (202) 493–6073). (These telephone numbers are not toll-free.)

SUPPLEMENTARY INFORMATION:

The Paperwork Reduction Act of 1995 (PRA), Public Law No. 104–13, § 2, 109 Stat. 163 (1995) (codified as revised at 44 U.S.C. 3501–3520), and its implementing regulations, 5 CFR. Part 1320, require Federal agencies to issue two notices seeking public comment on information collection activities before OMB may approve paperwork packages. 44 U.S.C. 3506, 3507; 5 CFR 1320.5, 1320.8(d)(1), 1320.12. On September 25, 2008, FRA published a 60-day notice in the **Federal Register** soliciting comment on ICRs that the agency was seeking OMB approval. 73 FR 55589. FRA received no comments in response to this notice.

Before OMB decides whether to approve this proposed collection of information, it must provide 30 days for public comment. 44 U.S.C. 3507(b); 5 CFR 1320.12(d). Federal law requires OMB to approve or disapprove paperwork packages between 30 and 60 days after the 30 day notice is published. 44 U.S.C. 3507 (b)–(c); 5 CFR 1320.12(d); *see also* 60 FR 44978, 44983, Aug. 29, 1995. OMB believes that the 30 day notice informs the regulated community to file relevant comments and affords the agency adequate time to digest public comments before it renders a decision. 60 FR 44983, Aug. 29, 1995. Therefore, respondents should submit their respective comments to OMB within 30 days of publication to best ensure having their full effect. 5 CFR 1320.12(c); *see also* 60 FR 44983, Aug. 29, 1995.

The summaries below describe the nature of the information collection requirements (ICRs) and the expected burden. The revised requirements are being submitted for clearance by OMB as required by the PRA.

Title: Occupational Noise Exposure for Railroad Operating Employees.

OMB Control Number: 2130–0571.

Type of Request: Extension of a currently approved collection.

Affected Public: Railroads.

Form(s): N/A.

Abstract: The collection of information is used by FRA to ensure that railroads covered by this rule establish and implement—by specified dates—noise monitoring, hearing conservation, and audiometric testing programs, as well as hearing conservation training programs, to protect their employees against the damaging and potentially dangerous effects of excessive noise in the everyday rail environment.

Annual Estimated Burden: 43,928 hours.

Addressee: Send comments regarding these information collections to the Office of Information and Regulatory Affairs, Office of Management and Budget, 725 Seventeenth Street, NW., Washington, DC 20503; *Attention:* FRA Desk Officer. Comments may also be sent via e-mail to the Office of Information and Regulatory Affairs (OIRA) of the Office of Management and Budget at the following address: *oira_submissions@omb.eop.gov*.

Comments are invited on the following: Whether the proposed collections of information are necessary for the proper performance of the functions of FRA, including whether the information will have practical utility; the accuracy of FRA's estimates of the burden of the proposed information collections; ways to enhance the quality, utility, and clarity of the information to be collected; and ways to minimize the burden of the collections of information on respondents, including the use of automated collection techniques or other forms of information technology.

A comment to OMB is best assured of having its full effect if OMB receives it within 30 days of publication of this notice in the **Federal Register**.

Authority: 44 U.S.C. 3501–3520.

Issued in Washington, DC on December 3, 2008.

Martin J. Eble,

Acting Director, Office of Financial Management Federal Railroad Administration.

[FR Doc. E8–29095 Filed 12–9–08; 8:45 am]

BILLING CODE 4910–06–P

DEPARTMENT OF TRANSPORTATION

Federal Railroad Administration Proposed Agency Information Collection Activities; Comment Request

AGENCY: Federal Railroad Administration, DOT.

ACTION: Notice.

SUMMARY: In accordance with the Paperwork Reduction Act of 1995 and its implementing regulations, the Federal Railroad Administration (FRA) hereby announces that it is seeking renewal of the following currently approved information collection activities. Before submitting these information collection requirements for clearance by the Office of Management and Budget (OMB), FRA is soliciting public comment on specific aspects of the activities identified below.

DATES: Comments must be received no later than February 9, 2009.

ADDRESSES: Submit written comments on any or all of the following proposed activities by mail to either: Mr. Robert Brogan, Office of Safety, Planning and Evaluation Division, RRS–21, Federal Railroad Administration, 1200 New Jersey Ave., SE., Mail Stop 17, Washington, DC 20590, or Ms. Nakia Jackson, Office of Information Technology, RAD–20, Federal Railroad Administration, 1200 New Jersey Ave., SE., Mail Stop 35, Washington, DC 20590. Commenters requesting FRA to acknowledge receipt of their respective comments must include a self-addressed stamped postcard stating, ''Comments on OMB control number 2130–0548.'' Alternatively, comments may be transmitted via facsimile to (202) 493–6216 or (202) 493–6497, or via e-mail to Mr. Brogan at *robert.brogan@dot.gov*, or to Ms. Jackson at *nakia.jackson@dot.gov*. Please refer to the assigned OMB control number in any correspondence submitted. FRA will summarize comments received in response to this notice in a subsequent notice and include them in its information collection submission to OMB for approval.

FOR FURTHER INFORMATION CONTACT:

Mr. Robert Brogan, Office of Planning and Evaluation Division, RRS–21, Federal Railroad Administration, 1200 New Jersey Ave., SE., Mail Stop 17, Washington, DC 20590 (telephone: (202) 493–6292) or Ms. Nakia Jackson, Office of Information Technology, RAD–20, Federal Railroad Administration, 1200 New Jersey Ave., SE., Mail Stop 35, Washington, DC 20590 (telephone: (202) 493–6073). (These telephone numbers are not toll-free.)

SUPPLEMENTARY INFORMATION: The Paperwork Reduction Act of 1995 (PRA), Public Law No. 104–13, § 2, 109 Stat. 163 (1995) (codified as revised at 44 U.S.C. 3501–3520), and its implementing regulations, 5 CFR Part 1320, require Federal agencies to provide 60-days notice to the public for comment on information collection activities before seeking approval for

reinstatement or renewal by OMB. 44 U.S.C. 3506(c)(2)(A); 5 CFR 1320.8(d)(1), 1320.10(e)(1), 1320.12(a). Specifically, FRA invites interested respondents to comment on the following summary of proposed information collection activities regarding (i) whether the information collection activities are necessary for FRA to properly execute its functions, including whether the activities will have practical utility; (ii) the accuracy of FRA's estimates of the burden of the information collection activities, including the validity of the methodology and assumptions used to determine the estimates; (iii) ways for FRA to enhance the quality, utility, and clarity of the information being collected; and (iv) ways for FRA to minimize the burden of information collection activities on the public by automated, electronic, mechanical, or other technological collection techniques or other forms of information technology (*e.g.*, permitting electronic submission of responses). *See* 44 U.S.C. § 3506(c)(2)(A)(i)–(iv); 5 CFR 1320.8(d)(1)(i)–(iv). FRA believes that soliciting public comment will promote its efforts to reduce the administrative and paperwork burdens associated with the collection of information mandated by Federal regulations. In summary, FRA reasons that comments received will advance three objectives: (i) Reduce reporting burdens; (ii) ensure that it organizes information collection requirements in a ''user friendly'' format to improve the use of such information; and (iii) accurately assess the resources expended to retrieve and produce information requested. *See* 44 U.S.C. 3501.

Below is a brief summary of the currently approved information collection activities that FRA will submit for clearance by OMB as required under the PRA:

Title: Railroad Rehabilitation and Improvement Financing Program.

OMB Control Number: 2130–0548.

Abstract: Prior to the enactment of the Transportation Equity Act of the 21st Century (''TEA 21''), Title V of the Railroad Revitalization and Regulatory Reform Act of 1976 (the ''Act''), 45 U.S.C. 821 *et seq.*, authorized FRA to provide railroad financial assistance through the purchase of preference shares (45 U.S.C. 825), and the issuance of loan guarantees (45 U.S.C. 831). The FRA regulations implementing the preference share program were eliminated on February 9, 1996, due to the fact that the authorization for the program expired (28 FR 4937). The FRA regulations implementing the loan guarantee provisions of Title V of the Act are contained in 49 CFR 260. Section 7203 of TEA 21, Public Law 105–178 (June 9, 1998), replaces the existing Title V financing programs. The collection of information is used by FRA staff to determine the eligibility of applicants for a loan regarding eligible projects for the improvement/rehabilitation of rail equipment or facilities, the refinancing of outstanding debt for these purposes, or the development of new intermodal or railroad facilities. The aggregate unpaid principal amounts of obligations can not exceed $3.5 billion at any one time and not less than $1 billion is to be available solely for projects benefitting railroads other than Class I carriers.

Affected Public: State and local governments, government sponsored authorities and corporations, railroads (including Amtrak), and joint ventures that include at least one railroad.

REPORTING BURDEN

CFR section	Respondent universe	Total annual responses	Average time per response (hours)	Total annual burden hours
260.19—Pre-Application Meeting	21,956 potential applicants	3 meetings	1	3
260.23—Form and Content of Applications Generally.	21,956 potential applicants	15 applications	20	300
229.25—Additional Information for Applicants without a Credit Rating.	555 potential applicants	13 financial document packages	50	650
260.31—Execution and Filing of the Application—Original—Certificates with Original Application—Transmittal Letters—Original Application and Supporting Documents.	21,956 potential applicants	15 executed app.	.6	9
	21,956 potential applicants	15 certificates	.6	9
	21,956 potential applicants	20 letters	.6	9
	21,956 potential applicants	15 app. pkgs.	1.5	23
260.33—Information Requests—Statements by Applicants Requesting Confidentiality of Submitted Information.	21,956 potential applicants	15 statements	*30	8
260/35—Environmental Assessment—Environmental Impact Statements/Documents—Consultations with FRA Administrator.	21,956 potential applicants	2 assessments	1,000	2,000
	21,956 potential applicants	5 consultations	1	5
260.41—Inspection and Reporting—Submission of Financial and Other Documents Detailing Maintenance and Inspection in Compliance with Section 260.39.	21,956 potential applicants	120 financial records	10	1,200
260.49—Avoiding Defaults—Deferral Requests.	21,956 potential applicants	1 request	10	10

*In minutes.

Total Responses: 239.

Estimated Total Annual Burden: 4,226 hours.

Status: Regular Review.

Pursuant to 44 U.S.C. 3507(a) and 5 CFR 1320.5(b), 1320.8(b)(3)(vi), FRA informs all interested parties that it may not conduct or sponsor, and a respondent is not required to respond to, a collection of information unless it displays a currently valid OMB control number.

Authority: 44 U.S.C. 3501–3520.

Issued in Washington, DC on December 3, 2008.

Martin J. Eble,

Acting Director, Office of Financial Management, Federal Railroad Administration.

[FR Doc. E8–29098 Filed 12–9–08; 8:45 am]

BILLING CODE 4910–06–P

DEPARTMENT OF TRANSPORTATION

National Highway Traffic Safety Administration

[Docket No. NHTSA–2008–0176; Notice 1]

Adrian Steel Company on Behalf of Commercial Truck and Van, Receipt of Petition for Decision of Inconsequential Noncompliance

Adrian Steel Company (Adrian), on behalf of Commercial Truck and Van Equipment, Inc. (CTV) has determined that certain model year 2006–2008 incomplete vehicles that CTV completed as trucks did not fully comply with paragraph S4.3 of 49 CFR 571.110, Federal Motor Vehicle Safety Standard (FMVSS) No. 110 *Tire Selection and Rims for Motor Vehicles With a GVWR of 4,536 Kilograms (10,000 pounds) or Less.* Adrian has filed an appropriate report pursuant to 49 CFR Part 573, *Defect and Noncompliance Responsibility and Reports.*

Pursuant to 49 U.S.C. 30118(d) and 30120(h) (see implementing rule at 49 CFR part 556), Adrian has petitioned for an exemption from the notification and remedy requirements of 49 U.S.C. Chapter 301 on the basis that this noncompliance is inconsequential to motor vehicle safety.

This notice of receipt of Adrian, petition is published under 49 U.S.C. 30118 and 30120 and does not represent any agency decision or other exercise of judgment concerning the merits of the petition.

Affected are approximately 7,761 model years 2006–2008 General Motors Chevrolet Cargo Uplander GMT201 platform incomplete vehicles that CTV, acting as the final stage manufacturer, completed as trucks. CTV completed these vehicles during the period September 1, 2005 through June 4, 2008.

Paragraph S4.3 of FMVSS No. 110 requires in pertinent part:

S4.3 Placard. Each vehicle, except for a trailer or incomplete vehicle, shall show the information specified in S4.3 (a) through (g), and may show, at the manufacturer's option, the information specified in S4.3 (h) and (i), on a placard permanently affixed to the driver's side B-pillar. In each vehicle without a driver's side B-pillar and with two doors on the driver's side of the vehicle opening in opposite directions, the placard shall be affixed on the forward edge of the rear side door. If the above locations do not permit the affixing of a placard that is legible, visible and prominent, the placard shall be permanently affixed to the rear edge of the driver's side door. If this location does not permit the affixing of a placard that is legible, visible and prominent, the placard shall be affixed to the inward facing surface of the vehicle next to the driver's seating position. This information shall be in the English language and conform in color and format, not including the border surrounding the entire placard, as shown in the example set forth in Figure 1 in this standard. At the manufacturer's option, the information specified in S4.3 (c), (d), and, as appropriate, (h) and (i) may be shown, alternatively to being shown on the placard, on a tire inflation pressure label which must conform in color and format, not including the border surrounding the entire label, as shown in the example set forth in Figure 2 in this standard. The label shall be permanently affixed and proximate to the placard required by this paragraph. The information specified in S4.3 (e) shall be shown on both the vehicle placard and on the tire inflation pressure label (if such a label is affixed to provide the information specified in S4.3 (c), (d), and, as appropriate, (h) and (i)) may be shown in the format and color scheme set forth in Figures 1 and 2.

(a) Vehicle capacity weight expressed as ''The combined weight of occupants and cargo should never exceed XXX kilograms or XXX pounds'';

(b) Designated seated capacity (expressed in terms of total number of occupants and number of occupants for each front and rear seat location);

(c) Vehicle manufacturer's recommended cold tire inflation pressure for front, rear and spare tires, subject to the limitations of S4.3.4. For full size spare tires, the statement ''see above'' may, at the Manufacturer's option replace manufacturer's recommended cold tire inflation pressure. If no spare tire is provided, the word ''none'' must replace the manufacturer's recommended cold tire inflation pressure.

(d) Tire size designation, indicated by the headings ''size'' or ''original tire size'' or ''original size,'' and ''spare tire'' or ''spare,'' for the tires installed at the time of the first purchase for purposes other than resale. For full size spare tires, the statement ''see above'' may, at the manufacturer's option replace the tire size designation. If no spare tire is provided, the word ''none'' must replace the tire size designation * * *

In its petition, Adrian explained that several noncompliances with FMVSS No. 110 exist due to errors and omissions on the tire and loading information placard that it affixed to the vehicles. The noncompliances were identified as:

1. Paragraph S4.3(a) requires that the vehicle capacity weight be stated on the vehicle tire and loading information placard in Metric and English units. The Metric value (646 kg) appears correct but the English conversion value (5797 lb) is not correct.

2. Paragraph S4.3(c) requires that the recommended tire inflation pressures be stated on the vehicle placard for the original tires including the spare tire, and, by the example in FMVSS No. 110, be stated in both Metric (KPA) and English (PSI) units. The inflation pressures on the vehicle tire and loading information placard appear to be the English value only with no units identified, and no inflation pressure is provided for the spare tire.

3. Paragraph S4.3(d) requires the original tire sizes, including the spare, be stated on the vehicle tire and loading information placard. It appears that the information in the tire size column is rim size information. No tire size information is provided for the spare tire.

Furthermore, the vehicle certification label required by 49 CFR Part 567, Certification, requires the vehicle type classification (e.g., truck, multipurpose passenger vehicle, bus, trailer) to be specified. The certification labels specify a vehicle type classification of ''Van'' which is not a classification type recognized by the agency.

Summary of why Adrian Steel believes that the identified noncompliances are inconsequential to motor vehicle safety:

Adrian Steel believes that the tire and loading information placard is duplicated by the vehicle certification label (required by 49 CFR Part 567) because it also provides the appropriate information for an owner to understand tire inflation pressures, tire size and load ratings. Specifically:

1. Paragraph S4.3(a) requires that the vehicle capacity weight be stated on the vehicle placard in Metric and English units. Although the English units had been converted incorrectly, the measure was correct on the tire and loading information placard. Also, the vehicle certification label identifies the GVWR so that the safe gross vehicle weight rating is clearly identified.

2. Paragraph S4.3(c) requires that the recommended tire inflation pressures be stated on the vehicle placard for the original tires, stated in both Metric and English units. The inflation pressure of 35 was identified on the tire and loading information placard but the unit of measure was not included, however, it is included on the vehicle certification label which is mounted on the vehicle's B pillar adjacent to the tire and loading information placard. Since the tire inflation pressure is clearly identified on the Vehicle Certification Label, the information is available to the owner.

3. Paragraph S4.3(d) requires that the original tire sizes, be stated on the vehicle placard. Adrian placed the rim size on the tire and loading information placard, rather than the tire size. However, the tire size is clearly identified on the vehicle certification label along with the rim size. Both tire size and rim size are available to the owner for the associated vehicle and it would be impossible to mount a tire on the vehicle using the rim numbers as a tire size.

4. The vehicle certification label which is mounted on the vehicle next to the tire and loading information placard contained the correct English and Metric information for tire size, tire pressure, and GVWR but had a vehicle type identified as ''van'' rather than ''truck''. While this classification ''van'' is not recognized by the agency, Adrian believes that this is inconsequential to motor vehicle safety.

Adrian stated that its Customer Care Center has never received a call or communication of any type with regard to the tire and loading information placard or the vehicle certification label.

Adrian first became aware of the noncompliance when it was contacted by NHTSA in response to a vehicle inspection conducted by NHTSA.

Adrian also stated that it has corrected the problem that caused these errors so that they will not be repeated in future production.

In summation, Adrian states that it believes that the noncompliances are inconsequential to motor vehicle safety and that no corrective action is warranted.

NHTSA notes that the statutory provisions (49 U.S.C. 30118(d) and 30120(h)) that permit manufacturers to file petitions for a determination of inconsequentiality allow NHTSA to exempt manufacturers only from the duties found in sections 30118 and 30120, respectively, to notify owners, purchasers, and dealers of a defect or noncompliance and to remedy the defect or noncompliance.

Interested persons are invited to submit written data, views, and arguments on this petition. Comments must refer to the docket and notice number cited at the beginning of this notice and be submitted by any of the following methods:

a. *By mail addressed to:* U.S. Department of Transportation, Docket Operations, M–30, West Building Ground Floor, Room W12–140, 1200 New Jersey Avenue, SE., Washington, DC 20590.

b. By hand delivery to U.S. Department of Transportation, Docket Operations, M–30, West Building Ground Floor, Room W12–140, 1200 New Jersey Avenue, SE., Washington, DC 20590. The Docket Section is open on weekdays from 10 am to 5 pm except Federal holidays.

c. *Electronically:* By logging onto the Federal Docket Management System (FDMS) Web site at *http://www.regulations.gov/*. Follow the online instructions for submitting comments. Comments may also be faxed to 1–202–493–2251.

Comments must be written in the English language, and be no greater than 15 pages in length, although there is no limit to the length of necessary attachments to the comments. If comments are submitted in hard copy form, please ensure that two copies are provided. If you wish to receive confirmation that your comments were received, please enclose a stamped, self-addressed postcard with the comments. Note that all comments received will be posted without change to *http://www.regulations.gov*, including any personal information provided.

Anyone is able to search the electronic form of all comments received into any of our dockets by the name of the individual submitting the comment (or signing the comment, if submitted on behalf of an association, business, labor union, etc.). DOT's complete Privacy Act Statement in the **Federal Register** published on April 11, 2000 (65 FR 19477–78).

You may view documents submitted to a docket at the address and times given above. You may also view the documents on the Internet at *http://www.regulations.gov* by following the online instructions for accessing the dockets available at that Web site.

The petition, supporting materials, and all comments received before the close of business on the closing date indicated below will be filed and will be considered. All comments and supporting materials received after the closing date will also be filed and will be considered to the extent possible. When the petition is granted or denied, notice of the decision will be published in the **Federal Register** pursuant to the authority indicated below.

Comment closing date: January 9, 2009.

Authority: (49 U.S.C. 30118, 30120: delegations of authority at CFR 1.50 and 501.8).

Issued on: December 4, 2008.

Claude H. Harris,

Director, Office of Vehicle Safety Compliance.

[FR Doc. E8–29192 Filed 12–9–08; 8:45 am]

BILLING CODE 4910–59–P

DEPARTMENT OF TRANSPORTATION

National Highway Traffic Safety Administration

[Docket No. NHTSA–2008–0186]

Notice of Receipt of Petition for Decision That Nonconforming 2005–2006 Porsche Carrera Cabriolet Passenger Cars Manufactured Prior to September 1, 2006 Are Eligible for Importation

AGENCY: National Highway Traffic Safety Administration, DOT.

ACTION: Notice of receipt of petition for decision that nonconforming 2005–2006 Porsche Carrera Cabriolet passenger cars manufactured prior to September 1, 2006 are eligible for importation.

SUMMARY: This document announces receipt by the National Highway Traffic Safety Administration (NHTSA) of a petition for a decision that 2005–2006 Porsche Carrera Cabriolet passenger cars manufactured prior to September 1, 2006 that were not originally manufactured to comply with all applicable Federal motor vehicle safety standards (FMVSS) are eligible for importation into the United States because (1) they are substantially similar to vehicles that were originally manufactured for sale in the United States and that were certified by their manufacturer as complying with the safety standards (the U.S.-certified version of the 2005–2006 Porsche Carrera Cabriolet passenger cars manufactured prior to September 1, 2006,) and (2) they are capable of being readily altered to conform to the standards.

DATE: The closing date for comments on the petition is January 9, 2009.

ADDRESSES: Comments should refer to the docket and notice numbers above and be submitted by any of the following methods:

- *Federal eRulemaking Portal: Go to http://www.regulations.gov.* Follow the online instructions for submitting comments.
- *Mail:* Docket Management Facility: U.S. Department of Transportation, 1200 New Jersey Avenue, SE., West Building Ground Floor, Room W12–140, Washington, DC 20590–0001.
- *Hand Delivery or Courier:* West Building Ground Floor, Room W12–140, 1200 New Jersey Avenue, SE., between 9 a.m. and 5 p.m. ET, Monday through Friday, except Federal holidays.
- *Fax:* 202–493–2251.

Instructions: Comments must be written in the English language, and be no greater than 15 pages in length,

although there is no limit to the length of necessary attachments to the comments. If comments are submitted in hard copy form, please ensure that two copies are provided. If you wish to receive confirmation that your comments were received, please enclose a stamped, self-addressed postcard with the comments. Note that all comments received will be posted without change to *http://www.regulations.gov*, including any personal information provided. Please see the Privacy Act heading below.

Privacy Act: Anyone is able to search the electronic form of all comments received into any of our dockets by the name of the individual submitting the comment (or signing the comment, if submitted on behalf of an association, business, labor union, etc.). You may review DOT's complete Privacy Act Statement in the **Federal Register** published on April 11, 2000 (65 FR 19477–78).

How to Read Comments submitted to the Docket: You may read the comments received by Docket Management at the address and times given above. You may also see the comments on the Internet. To read the comments on the Internet, take the following steps:

(1) Go to the Federal Docket Management System (FDMS) Web page *http://www.regulations.gov*.

(2) On that page, click on ''Advanced Docket Search.''

(3) On the next page select ''NATIONAL HIGHWAY TRAFFIC SAFETY ADMINISTRATION'' from the drop-down menu in the Agency field and enter the Docket ID number shown at the heading of this document.

(4) After entering that information, click on ''submit.''

(5) The next page contains docket summary information for the docket you selected. Click on the comments you wish to see. You may download the comments. Please note that even after the comment closing date, we will continue to file relevant information in the Docket as it becomes available. Further, some people may submit late comments. Accordingly, we recommend that you periodically search the Docket for new material.

FOR FURTHER INFORMATION CONTACT: Coleman Sachs, Office of Vehicle Safety Compliance, NHTSA (202–366–3151).

SUPPLEMENTARY INFORMATION:

Background

Under 49 U.S.C. 30141(a)(1)(A), a motor vehicle that was not originally manufactured to conform to all applicable FMVSS shall be refused admission into the United States unless NHTSA has decided that the motor vehicle is substantially similar to a motor vehicle originally manufactured for importation into and sale in the United States, certified under 49 U.S.C. 30115, and of the same model year as the model of the motor vehicle to be compared, and is capable of being readily altered to conform to all applicable FMVSS.

Petitions for eligibility decisions may be submitted by either manufacturers or importers who have registered with NHTSA pursuant to 49 CFR Part 592. As specified in 49 CFR 593.7, NHTSA publishes notice in the **Federal Register** of each petition that it receives, and affords interested persons an opportunity to comment on the petition. At the close of the comment period, NHTSA decides, on the basis of the petition and any comments that it has received, whether the vehicle is eligible for importation. The agency then publishes this decision in the **Federal Register**.

AAA Sunshine Car Import (AAA), of Ft. Myers, Florida (Registered Importer 01–289) has petitioned NHTSA to decide whether nonconforming 2005–2006 Porsche Carrera Cabriolet passenger cars manufactured prior to September 1, 2006 are eligible for importation into the United States. The vehicles which AAA believes are substantially similar are 2005–2006 Porsche Carrera Cabriolet passenger cars manufactured prior to September 1, 2006 that were manufactured for sale in the United States and certified by their manufacturer as conforming to all applicable FMVSS.

The petitioner claims that it compared non-U.S. certified 2005–2006 Porsche Carrera Cabriolet passenger cars manufactured prior to September 1, 2006 to their U.S.-certified counterparts, and found the vehicles to be substantially similar with respect to compliance with most FMVSS.

AAA submitted information with its petition intended to demonstrate that non-U.S. certified 2005–2006 Porsche Carrera Cabriolet passenger cars manufactured prior to September 1, 2006, as originally manufactured, conform to many FMVSS in the same manner as their U.S. certified counterparts, or are capable of being readily altered to conform to those standards.

Specifically, the petitioner claims that non-U.S. certified 2005–2006 Porsche Carrera Cabriolet passenger cars manufactured prior to September 1, 2006 are identical to their U.S. certified counterparts with respect to compliance with Standard Nos. 102 *Transmission Shift Lever Sequence, Starter Interlock, and Transmission Braking Effect,* 103 *Windshield Defrosting and Defogging Systems,* 104 *Windshield Wiping and Washing Systems,* 106 *Brake Hoses,* 109 *New Pneumatic Tires,* 113 *Hood Latch System,* 116 *Motor Vehicle Brake Fluids,* 124 *Accelerator Control Systems,* 135 *Passenger Car Brake Systems,* 201 *Occupant Protection in Interior Impact,* 202 *Head Restraints,* 204 *Steering Control Rearward Displacement,* 205 *Glazing Materials,* 206 *Door Locks and Door Retention Components,* 207 *Seating Systems,* 210 *Seat Belt Assembly Anchorages,* 212 *Windshield Mounting,* 216 *Roof Crush Resistance,* 219 *Windshield Zone Intrusion,* 225 *Child Restraint Anchorage Systems,* 301 *Fuel System Integrity,* and *302 Flammability of Interior Materials.*

In addition, the petitioner claims that the vehicles comply with the Bumper Standard found in 49 CFR Part 581.

The petitioner also contends that the vehicles are capable of being readily altered to meet the following standards, in the manner indicated:

Standard No. 101 *Controls and Displays:* (a) Inscription of the word ''brake'' on the dash in place of the international ECE warning symbol; (b) replacement of the speedometer with a unit reading in miles per hour, or modification of existing speedometer so that it reads in miles per hour; and (c) installation or activation of U.S.-version software in the vehicle's computer system.

Standard No. 108 *Lamps, Reflective Devices and Associated Equipment:* Inspection of all vehicles and installation, on vehicles that are not already so equipped, of U.S.-model components to meet the requirements of this standard.

Standard No. 110 *Tire Selection and Rims:* Installation of a tire information placard.

Standard No. 111 *Rearview Mirrors:* Installation of a U.S.-model passenger side rearview mirror, or inscription of the required warning statement on the face of that mirror.

Standard No. 114 *Theft Protection:* Installation of a supplemental key warning buzzer, or installation or activation of U.S.-version software to meet the requirements of this standard.

Standard No. 118 *Power-Operated Window, Partition, and Roof Panel Systems:* Installation or activation of U.S.-version software in the vehicle's computer system to meet the requirements of this standard.

Standard No. 208 *Occupant Crash Protection:* Inspection of all vehicles and replacement of any non U.S.-model seat belts, air bag control units, air bags, and sensors with U.S.-model

components on vehicles that are not already so equipped; and (b) installation or activation of U.S.-version software to ensure that the seat belt warning system meets the requirements of this standard.

The petitioner states that the crash protection system used in these vehicles consists of dual front airbags and combination lap and shoulder belts at the front outboard seating positions. The seat belt systems are described as self-tensioning and capable of being released by means of a single red push-button.

Standard No. 209 *Seat Belt Assemblies:* Inspection of all vehicles and replacement of any non U.S.-certified model seat belts with U.S.-model components.

Standard No. 214 *Side Impact Protection:* Inspection of all vehicles and installation of U.S.-model door beam components on vehicles not already so equipped.

Standard No. 401 *Interior Trunk Release:* Installation of U.S.-model interior trunk release components.

The petitioner additionally states that a vehicle identification plate must be affixed to the vehicles near the left windshield post to meet the requirements of 49 CFR Part 565.

All comments received before the close of business on the closing date indicated above will be considered, and will be available for examination in the docket at the above addresses both before and after that date. To the extent possible, comments filed after the closing date will also be considered. Notice of final action on the petition will be published in the **Federal Register** pursuant to the authority indicated below.

Authority: 49 U.S.C. 30141(a)(1)(A) and (b)(1); 49 CFR 593.8; delegations of authority at 49 CFR 1.50 and 501.8.

Issued on: December 4, 2008.

Claude H. Harris,

Director, Office of Vehicle, Safety Compliance.

[FR Doc. E8–29190 Filed 12–9–08; 8:45 am]

BILLING CODE 4910–59–P

Federal Register

Wednesday,
December 10, 2008

Part II

Department of the Interior

Fish and Wildlife Service

50 CFR Part 17

Endangered and Threatened Wildlife and Plants; Review of Native Species That Are Candidates for Listing as Endangered or Threatened; Annual Notice of Findings on Resubmitted Petitions; Annual Description of Progress on Listing Actions; Proposed Rule

DEPARTMENT OF THE INTERIOR

Fish and Wildlife Service

50 CFR Part 17

[FWS-R9-ES-2008-0115; MO-9221050083 – B2]

Endangered and Threatened Wildlife and Plants; Review of Native Species That Are Candidates for Listing as Endangered or Threatened; Annual Notice of Findings on Resubmitted Petitions; Annual Description of Progress on Listing Actions

AGENCY: Fish and Wildlife Service, Interior.

ACTION: Notice of review.

SUMMARY: In this Candidate Notice of Review (CNOR), we, the U.S. Fish and Wildlife Service (Service), present an updated list of plant and animal species native to the United States that we regard as candidates for or have proposed for addition to the Lists of Endangered and Threatened Wildlife and Plants under the Endangered Species Act of 1973, as amended. Identification of candidate species can assist environmental planning efforts by providing advance notice of potential listings, allowing landowners and resource managers to alleviate threats and thereby possibly remove the need to list species as endangered or threatened. Even if we subsequently list a candidate species, the early notice provided here could result in more options for species management and recovery by prompting candidate conservation measures to alleviate threats to the species.

The CNOR summarizes the status and threats that we evaluated in order to determine that species qualify as candidates and to assign a listing priority number (LPN) to each species, or to remove species from candidate status. Additional material that we relied on is available in the Species Assessment and Listing Priority Assignment Forms (species assessment forms, previously called candidate forms) for each candidate species.

Overall, this CNOR recognizes 1 new candidate, changes the LPN for 11 candidates, and removes 2 species from candidate status. Combined with other decisions for individual species that were published separately from this CNOR in the past year, the current number of species that are candidates for listing is 251.

This document also includes our findings on resubmitted petitions and describes our progress in revising the Lists of Endangered and Threatened Wildlife and Plants during the period September 30, 2007, through September 30, 2008.

We request additional status information that may be available for the 251 candidate species identified in this CNOR.

DATES: We will accept information on this Candidate Notice of Review at any time.

ADDRESSES: This notice is available on the Internet at *http://www.regulations.gov*, and *http://endangered.fws.gov/candidates/index.html*. Species assessment forms with information and references on a particular candidate species' range, status, habitat needs, and listing priority assignment are available for review at the appropriate Regional Office listed below in **SUPPLEMENTARY INFORMATION** or at the Branch of Candidate Conservation, Arlington, VA (see address below), or on our Internet website (*http://endangered.fws.gov/candidates/index.html*). Please submit any new information materials, comments, or questions of a general nature on this notice to the Arlington, VA, address listed below. Please submit any new information, materials, comments, or questions pertaining to a particular species to the address of the Endangered Species Coordinator in the appropriate Regional Office listed in **SUPPLEMENTARY INFORMATION**.

FOR FURTHER INFORMATION CONTACT: The Endangered Species Coordinator(s) in the appropriate Regional Office(s) or Chief, Branch of Candidate Conservation, U.S. Fish and Wildlife Service, 4401 N. Fairfax Drive, Room 420, Arlington, VA 22203 (telephone 703-358-2105; facsimile 703-358-1735). Persons who use a telecommunications device for the deaf (TDD) may call the Federal Information Relay Service (FIRS) at 800-877-8339.

SUPPLEMENTARY INFORMATION:

Information Solicited

We request additional status information that may be available for any of the candidate species identified in this CNOR. We will consider this information in preparing listing documents and future revisions to the notice of review, as it will help us in monitoring changes in the status of candidate species and in management for conserving them. We also request information on additional species to consider including as candidates as we prepare future updates of this notice.

You may submit your information concerning this notice in general or for any of the species included in this notice by one of the methods listed in the **ADDRESSES** section.

Species-specific information and materials we receive will be available for public inspection by appointment, during normal business hours, at the appropriate Regional Office listed below in **SUPPLEMENTARY INFORMATION**. General information we receive will be available at the Branch of Candidate Conservation, Arlington, VA (see address above).

Candidate Notice of Review

Background

The Endangered Species Act of 1973, as amended (16 U.S.C. 1531 *et seq.*) (Act), requires that we identify species of wildlife and plants that are endangered or threatened, based on the best available scientific and commercial information. As defined in section 3 of the Act, an endangered species is any species which is in danger of extinction throughout all or a significant portion of its range, and a threatened species is any species which is likely to become an endangered species within the foreseeable future throughout all or a significant portion of its range. Through the Federal rulemaking process, we add species that meet these definitions to the List of Endangered and Threatened Wildlife at 50 CFR 17.11 or the List of Endangered and Threatened Plants at 50 CFR 17.12. As part of this program, we maintain a list of species that we regard as candidates for listing. A candidate species is one for which we have on file sufficient information on biological vulnerability and threats to support a proposal to list as endangered or threatened, but for which preparation and publication of a proposal is precluded by higher-priority listing actions. A species may be indentified by us as a candidate for listing based on an evaluation of its status that we conducted on our own initiative, or as a result of making a finding on a petition to list a species that listing is warranted but precluded by other higher priority listing action (see the Petition Findings section, below).

We maintain this list of candidates for a variety of reasons: to notify the public that these species are facing threats to their survival; to provide advance knowledge of potential listings that could affect decisions of environmental planners and developers; to provide information that may stimulate and guide conservation efforts that will remove or reduce threats to these species and possibly make listing unnecessary; to solicit input from interested parties to help us identify those candidate species that may not require protection under the Act or additional species that may require the

Act's protections; and to solicit necessary information for setting priorities for preparing listing proposals. We strongly encourage collaborative conservation efforts for candidate species and offer technical and financial assistance to facilitate such efforts. For additional information regarding such assistance, please contact the appropriate Regional Office listed in **SUPPLEMENTARY INFORMATION** or visit our Internet website, *http://endangered.fws.gov/candidates/index.html*.

Previous Notices of Review

We have been publishing candidate notices of review (CNOR) since 1975. The most recent CNOR (prior to this CNOR) was published on December 6, 2007 (72 FR 69033). CNORs published since 1994 are available on our Internet website, *http://www.fws.gov/endangered/candidates/index.html*. For copies of CNORs published prior to 1994, please contact the Branch of Candidate Conservation (see **ADDRESSES** section above).

On September 21, 1983, we published guidance for assigning an LPN for each candidate species (48 FR 43098). Using this guidance, we assign each candidate an LPN of 1 to 12, depending on the magnitude of threats, immediacy of threats, and taxonomic status; the lower the LPN, the higher the listing priority (that is, a species with an LPN of 1 would have the highest listing priority). Such a priority ranking guidance system is required under section 4(h)(3) of the Act (15 U.S.C. 1533(h)(3)). As explained below, in using this system we first categorize based on the magnitude of the threat(s), then by the immediacy of the threat(s), and finally by taxonomic status.

Under this priority ranking system, magnitude of threat can be either ''high'' or ''moderate to low.'' This criterion helps ensure that the species facing the greatest threats to their continued existence receive the highest listing priority. It is important to recognize that all candidate species face threats to their continued existence, so the magnitude of threats is in relative terms. When evaluating the magnitude of the threat(s) facing the species, we consider information such as: the number of populations and/or extent of range of the species affected by the threat(s); the biological significance of the affected population(s), taking into consideration the life history characteristics of the species and its current abundance and distribution; whether the threats affect the species in only a portion of its range, and if so the likelihood of persistence of the species in the unaffected portions; and whether the effects are likely to be permanent.

As used in our priority ranking system, immediacy of threat is categorized as either ''imminent'' or ''nonimminent'' and is not a measure of how quickly the species is likely to become extinct if the threats are not addressed; rather, immediacy is based on when the threats will begin. If a threat is currently occurring or likely to occur in the very near future, we classify the threat as imminent. Determining the immediacy of threats helps ensure that species facing actual, identifiable threats are given priority for listing proposals over those for which threats are only potential or species that are intrinsically vulnerable to certain types of threats but are not known to be presently facing such threats.

Our priority ranking system has three categories for taxonomic status: species that are the sole members of a genus; full species (in a genus that has more than one species); and subspecies, distinct population segments of vertebrate species, and species for which listing is appropriate in a significant portion of their range rather than their entire range.

The result of the ranking system is that we assign each candidate a listing priority number of 1 to 12. For example, if the threat(s) is of high magnitude, with immediacy classified as imminent, the listable entity is assigned an LPN of 1, 2, or 3 based on its taxonomic status (e.g., a species that is the only member of a genus would be assigned to the LPN 1 category, a full species to LPN 2, and a subspecies, DPS, or a species for which listing is appropriate in a significant portion of its range would be assigned to LPN 3). In summary, the LPN ranking system provides a basis for making decisions about the relative priority for preparing a proposed rule to list a given species. No matter which LPN we assign to a species, each species included in this notice as a candidate is one for which we have sufficient information to prepare a proposed rule to list it because it is in danger of extinction or likely to become endangered within the foreseeable future throughout all or a significant portion of its range.

For more information on the process and standards used in assigning LPNs, a copy of the guidance is available on our website at: *http://www.fws.gov/endangered/policy/index.html*. For more information on the LPN assigned to a particular species, the species assessment for each candidate contains the LPN chart and a rationale for the determination of the magnitude and imminence of threat(s) and assignment of the LPN; that information is summarized in this CNOR.

This revised notice supersedes all previous animal, plant, and combined candidate notices of review.

Summary of This CNOR

Since publication of the CNOR on December 6, 2007 (72 FR 69033), we reviewed the available information on candidate species to ensure that a proposed listing is justified for each species, and reevaluated the relative LPN assigned to each species. We also evaluated the need to emergency-list any of these species, particularly species with high priorities (i.e., species with LPNs of 1, 2, or 3). This review and reevaluation ensures that we focus conservation efforts on those species at greatest risk first.

In addition to reviewing candidate species since publication of the last CNOR, we have worked on numerous findings in response to petitions to list species, and on proposed and final determinations for rules to list species under the Act. Some of these findings and determinations have been completed and published in the **Federal Register**, while work on others is still under way. See the discussions of Preclusion and Expeditious Progress, below, for details.

Based on our review of the best available scientific and commercial information, with this CNOR we identify 1 new candidate species (see *New Candidates* , below), change the LPN for 11 candidates (see *Listing Priority Changes in Candidates*, below) and determine that listing proposals are not warranted for 2 species and thus remove them from candidate status (see *Candidate Removals*, below). Combined with the other decisions published separately from this CNOR for individual species that previously were candidates, a total of 251 species (including 109 plant and 142 animal species) are now candidates awaiting preparation of rules proposing their listing. These 251 species, along with the 50 species currently proposed for listing, are included in Table 1.

Table 2 lists the changes from the previous CNOR, and includes three species identified in the previous CNOR as either proposed for listing or classified as candidates that are no longer in those categories. This includes one species for which we published a final rule to list, plus the two species that we have determined do not warrant preparation of a rule to propose listing and therefore have been removed from candidate status in this CNOR.

New Candidates

Below we present a brief summary of one new plant candidate, *Sphaeralcea gierischii* (Gierisch mallow), which we are recognizing in this CNOR. Complete information, including references, can be found in the species assessment form. You may obtain a copy of this form from the Regional Office having the lead for the species (Region 2), or from our Internet website (*http://endangered.fws.gov/candidates/index.html*). For this species, we find that we have on file sufficient information on biological vulnerability and threats to support a proposal to list as endangered or threatened, but that preparation and publication of a proposal is precluded by higher-priority listing actions (i.e., it met our definition of a candidate species). We also note below that four other species, Gunnison's prairie dog (specifically in the portion of its range in montane portions of central and south central Colorado and north central New Mexico), Rio Grande cutthroat trout, northern Mexican garter snake, and Jollyville Plateau salamander, were identified as candidates earlier this year as a result of separate petition findings published in the **Federal Register**.

Mammals

Gunnison's prairie dog (*Cynomys gunnisoni*) – In a separate warranted but precluded 12–month petition finding published on February 5, 2008 (73 FR 6660), we previously announced candidate status for the Gunnison's prairie dog in the montane portion of its range, located in central and south-central Colorado and north-central New Mexico. As described in that notice, we determined that the montane portion of the range, which comprises approximately 40 percent of the total range of the species, is a significant portion of the range where listing the species is warranted. In that notice we assigned the population an LPN of 2. In this CNOR, we are making a technical correction to the LPN, changing it to a 3. This correction makes the LPN for Gunnison's prairie dog consistent with the clear intent of our 1983 LPN guidance (48 FR 43098). Under our LPN guidance, among listable entities facing threats of the same magnitude and imminence, a species that is the only member of a genus has highest priority (e.g. LPN 1), a full species (in a genus with more than one species) has the next highest priority (e.g. LPN 2), and a subspecies or DPS are in the following priority category (e.g. LPN 3). To be consistent with this approach, when we make a finding that listing is warranted but precluded for a species in a significant portion of its range (rather than throughout its entire range), we assign it to the same LPN category as a subspecies or DPS (e.g. LPN 3).

Reptiles

Northern Mexican gartersnake (*Thamnophis eques megalops*) – We previously announced candidate status for this species in a separate warranted but precluded 12–month petition finding published on November 25, 2008 (73 FR 71787).

Amphibians

Jollyville Plateau salamander (*Eurycea tonkawae*) – We previously announced candidate status for this species in a separate warranted but precluded 12–month petition finding published on December 13, 2007 (72 FR 71039).

Fish

Rio Grande cutthroat trout (*Oncorhynchus clarki virginalis*) – We previously announced candidate status for this subspecies in a separate warranted but precluded 12–month petition finding published on May 14, 2008 (73 FR 27899).

Flowering Plants

Sphaeralcea gierischii (Gierisch mallow) – The following information is based on information contained in our files, including site visits by species experts. There are nine known populations of this species on a combined total of approximately 59.5 acres (ac) (24.12 hectares (ha)) in Arizona and Utah. Seven populations are found on approximately 55 ac (22.3 ha) managed by the Bureau of Land Management in Arizona. One population occurs on approximately 2 ac (0.81 ha) on land managed by the Arizona State Land Department. One population occurs on approximately 2.5 ac (1.01 ha) in Utah. The primary threat to the species in Arizona is ongoing gypsum mining and associated activities. The primary threat to the species in Utah is potential impacts from off-road vehicle use. The threats are high in magnitude, since survival of the species is threatened throughout its entire range in Arizona by gypsum mining, with the two largest populations in active mining operations. Loss of those two populations would significantly reduce the total number of individuals throughout the range, threatening the long-term viability of this species. The threats are imminent, since they are ongoing in Arizona. Therefore, we assigned an LPN of 2 to this species.

Listing Priority Changes in Candidates

We reviewed the LPN for all candidate species and are changing the numbers for the following species discussed below. Some of the changes reflect actual changes in either the magnitude or imminence of the threats. In one case, the LPN change reflects a change in the taxonomy of the species. For some species, the LPN change reflects efforts to ensure national consistency as well as closer adherence to the 1983 guidelines in assigning these numbers, rather than an actual change in the nature of the threats.

Mammals

Gunnison's prairie dog (*Cynomys gunnisoni*) (montane population) – See above summary under ''*New Candidates*''.

Birds

Red knot (*Calidris canutus rufa*) – The following summary is based on information containted in our files and information provided by petitioners. Four petitions to emergency list the red knot have been received: one on August 9, 2004, two others on August 5, 2005, and the latest on February 27, 2008. The *rufa* subspecies is one of six recognized subspecies of red knot and one of three subspecies occurring in North America (hereafter all mention of red knot in this CNOR refers strictly to the *rufa* subspecies). This subspecies makes one of the longest distance migrations known in the animal kingdom, as it travels between breeding areas in the central Canadian Arctic and wintering areas that are primarily in southern South America along the coast of Chile and Argentina. They migrate along the Atlantic coast of the United States, where they may be found from Maine to Florida.

The Delaware Bay area (in Delaware and New Jersey) is the largest known spring migration stopover area, with far fewer migrants congregating elsewhere along the Atlantic coast. The concentration in the Delaware Bay area occurs from the middle of May to early June, corresponding to the spawning season of horseshoe crabs. The knots feed on horseshoe crab eggs, rebuilding energy reserves needed to complete migrations to the Arctic and arrive on the breeding grounds in good condition. In the past, horseshoe crab eggs at Delaware Bay were so numerous that a knot could eat enough in two to three weeks to double its weight.

Surveys at wintering areas and at Delaware Bay during spring migration indicate a substantial decline in the red knot in recent years. At the Delaware

Bay area, peak counts between 1982 and 1998 were as high as 95,360 knots. Counts may vary considerably between years. Some of the fluctuations can be attributed to predator-prey cycles in the breeding grounds, and counts show that knots rebound from such reductions. Research shows that since 1998, a high proportion of red knots leaving the Delaware Bay failed to achieve threshold departure masses needed to fly to breeding grounds and survive an initial few days of snow cover, and this corresponded to reduced annual survival rates. Recently, peak counts at the Delaware Bay area have been lower than in the past and do not show a rebound. The peaks were 13,315 in 2004; 15,345 in 2005; 13,455 in 2006; and 12,375 in 2007. Counts in recent years at the principal wintering areas in South America also are substantially lower than in the past and do not show a rebound.

The primary factor threatening the red knot is destruction and modification of its habitat, particularly the reduction in key food resources resulting from reductions in horseshoe crabs, which are harvested primarily for use as bait and secondarily to support a biomedical industry. Commercial harvest increased substantially in the 1990s. Since 1999, a series of timing restrictions and substantially lower harvest quotas have been adopted by the Atlantic States Marine Fisheries Commission (ASMFC), as well as New Jersey and Delaware. In May 2006, the ASMFC adopted restrictions effective from October 1, 2006, to September 30, 2008, including a prohibition on harvest and landing of horseshoe crabs in New Jersey and Delaware from January 1 through June 7, harvest of males only from June 8 through December 31, and harvest limited to no more than 100,000 horseshoe crabs per state per year. The ASMFC also adopted other restrictions applicable to Maryland and Virginia. New Jersey established regulations in 2006 which superseded ASMFC restrictions; resulting in a moratorium on all horseshoe crab harvest in New Jersey from May 15, 2006 through June 7, 2008. In March 2008, New Jersey passed legislation imposing an open-ended moratorium on horseshoe crab harvest or landing within the State until such time as the red knot has fully recovered. In February 2007, Delaware imposed a 2–year moratorium, effective January 1, 2007, on harvest of horseshoe crabs within Delaware lands or waters. In June 2007, following litigation by two businesses involved in the harvesting and sale of horseshoe crabs, Delaware's moratorium was overturned. Consequently Delaware developed regulations allowing for a male-only horseshoe crab harvest, consistent with restrictions adopted by ASMFC. The reductions in commercial harvest since 1999 are substantial: 726,660 horseshoe crab landings for bait were reported in 1999 in Delaware and New Jersey, compared to 173,177 in 2004 and a preliminary 2007 report of 76,663 crabs landed for bait in Delaware and no horseshoe crabs landed in New Jersey as a result of the State-imposed harvest moratorium. However, we do not know whether horseshoe crab populations will rebuild or how long a lag time there may be in increased availability of eggs, as the species needs 8-10 years to reach sexual maturity, and other key information for estimating population response is lacking. A survey in Delaware Bay showed horseshoe crab spawning activity was stable or slightly declining from 1999 to 2004. Updated spawning information following implementation of additional harvest restrictions shows that female horseshoe crab spawning activity in Delaware Bay has been stable for the overall period of 1999 to 2007 and male horseshoe crab spawning increased during that period. Thus, despite additional harvest regulations, numbers of spawning females have not yet shown an increase.

The numbers of red knots at key wintering areas in South America remained relatively steady from 2005 to 2007, giving optimism that the declining trend may have ceased or slowed. In 2008, however, counts of red knots within principal wintering areas showed an all-time low of only 14,800 red knots. Counts of red knots within the principal wintering areas in Chile and Argentina declined by nearly 75 percent from 1985 to 2007 and declined by an additional 15 percent in the past year (2007 to 2008). Thus, in recent years the number of knots in these survey areas has been much lower than in the past and the trend in the abundance is not improving despite a nearly tenfold reduction in horseshoe crab landings since the late 1990s.

Other identified threat factors include habitat destruction due to beach erosion and various shoreline protection and stabilization projects that are affecting areas used by migrating knots for foraging, the inadequacy of existing regulatory mechanisms, human disturbance, and competition with other species for limited food resources. Also, the concentration of red knots in the Delaware Bay areas and at a relatively small number of wintering areas makes the species vulnerable to potential large-scale events in those areas such as oil spills or severe weather in those areas. Overall, we conclude that the threats, in particular the modification of habitat through harvesting of horseshoe crabs, severe enough that it puts the viability of the knot at substantial risk and is therefore of a high magnitude. The threats are currently occurring, and therefore imminent because of continuing suppressed horseshoe-crab-egg forage conditions for red knot within the Delaware Bay stopover. To help ensure consistency in the application of our listing priority process, we changed the LPN from a 6 to a 3 for this subspecies because threats are imminent.

Lesser prairie-chicken (Tympanuchus pallidicinctus) – The following summary is based on information contained in our files and the petition received on October 5, 1995. Additional information can be found in the 12–month finding published on June 7, 1998 (63 FR 31400). This species occurs in Colorado, Kansas, New Mexico, Oklahoma, and Texas. Biologists estimate that the occupied range has declined by 92 percent since the 1800s.

The most serious threat to the lesser prairie-chicken is the present and threatened destruction, modification, and curtailment of its habitat and range. This includes loss of habitat from conversion of native rangelands to introduced forages and cultivation; conversion of suitable restored habitat in the Conservation Reserve Program (CRP) to cropland; cumulative habitat degradation caused by severe grazing; and energy development, including wind, oil, and gas development. The magnitude of threats to the species from wind energy development and conversion of CRP lands to croplands has increased recently, both in terms of ongoing activity and potential activity expected in the next few years. Additional threats are woody plant invasion of open prairies due to fire suppression, herbicide use (including resumption of herbicide use in shinnery oak habitat), and habitat fragmentation caused by structural and transportation developments. Many of these threats may exacerbate the normal effects of periodic drought on lesser- prairie-chicken populations. In many cases, the remaining suitable habitat has become fragmented by the spatial arrangement of these various activities. The increasing level of habitat fragmentation means that (1) some of the remaining habitat patches may become smaller than necessary to meet the requirements of individuals and populations; (2) necessary habitat heterogeneity may be lost to areas of homogeneous habitat structure; (3) areas between habitat patches may harbor higher levels of

predators or brood parasites; and (4) the probability of recolonization of habitat that becomes unoccupied decreases as the distance between suitable habitat patches expands. Based on our most recent assessment, we find that ongoing threats to the lesser prairie-chicken have increased in terms of the amount of habitat involved and that the overall magnitude of threats to the lesser prairie-chicken throughout its range is high because the threats put the viability of the lesser prairie chicken at substantial risk. The threats are ongoing and thus, imminent. Consequently, we changed the LPN from an 8 to a 2 for this species.

Amphibians

Georgetown salamander (*Eurycea naufragia*) – The following summary is based on information contained in our files. No new information was provided in the petition received on May 11, 2004. The Georgetown salamander is known from spring outlets along five tributaries to the San Gabriel River and one cave in the City of Georgetown, Williamson County, Texas. The Georgetown salamander has a very limited distribution and depends on a constant supply of clean water from the Northern Segment of the Edwards Aquifer for its survival.

Primary threats to this species are degradation of water quality due to expanding urbanization. Increased impervious cover by development increases the quantity and velocity of runoff that leads to erosion and greater pollution transport. Pollutants and contaminants that enter the Edwards Aquifer are discharged from spring outlets in salamander habitat and have serious morphological and physiological effects to the species. The Texas Commission on Environmental Quality (TCEQ) adopted the Edwards Rules in 1995 and 1997, which require a number of water-quality-protection measures for new development occurring in the recharge and contributing zones of the Edwards Aquifer. New developments are still obligated to comply with regulations that were applicable at the time when project applications for development were first filed. However, Chapter 245 of the Texas Local Government Code permits ''grandfathering'' of state regulations. Grandfathering allows developments to be exempted from any new local or state requirements for water-quality controls and impervious-cover limits if the developments were planned prior to the implementation of such regulations. As a result of the grandfathering law, very few developments have followed these ordinances. In addition, it is significant that even if they were followed with every new development, these ordinances do not span the entire watershed for the Edwards Aquifer. The TCEQ has developed voluntary water quality protection measures for development in the Edwards Aquifer region of Texas; however, it is unknown if these measures will be implemented throughout a large portion of the watershed or if they will be effective in maintaining or improving water quality.

Development occurring outside the TCEQ's jurisdiction can have negative consequences on water quality and thus affect the species. Water-quality impacts threaten the continued existence of the Georgetown salamander by altering physical aquatic habitats and the food sources of the salamander. The threats are imminent because urbanization is ongoing, and continues to expand over the Northern Segment of the Edwards Aquifer. However, Williamson County and the Williamson County Conservation Fund are currently actively working to protect habitat and acquire land within the contributing watershed for the Georgetown salamander. Also, they are planning to conduct monitoring and data-collecting activities in an effort that is expected to lead to the development of a conservation strategy for this species. Although this species still meets our definition of a candidate, these conservation actions reduce the magnitude of the threat to the Georgetown salamander to a moderate level by reducing the amount of development occurring in the portion of the watershed that affects the species. Thus, we have changed the LPN from a 2 to an 8 for this species.

Fishes

Headwater chub (*Gila nigra*) – The following summary is based on information contained in our files and the 12–month finding on a petition to list the species, which was published May 3, 2006 (71 FR 26007). The range of the headwater chub has been reduced by approximately 60 percent. Seventeen streams (125 miles (200 kilometers) of stream) are thought to be occupied out of 20 streams (312 miles (500 kilometers) of stream) formerly occupied in the Gila River Basin in Arizona and New Mexico. Recent surveys have documented one new population. All remaining populations are fragmented and isolated and threatened by a combination of factors.

Headwater chub are threatened by introductions of nonnative fish that prey on them and/or compete with them for food. These nonnative fish are difficult to eliminate and, therefore, pose an ongoing threat. Habitat destruction and modification has occurred and continues to occur as a result of dewatering, impoundment, channelization, and channel changes caused by alteration of riparian vegetation and watershed degradation from mining, grazing, roads, water pollution, urban and suburban development, groundwater pumping, and other human actions. Existing regulatory mechanisms do not appear to be adequate for addressing the impact of nonnative fish and also have not removed or eliminated the threats that continue to be posed in relation to habitat destruction or modification. The fragmented nature and rarity of existing populations makes them vulnerable to other natural or manmade factors, such as drought and wildfire.

The Arizona Game and Fish Department has created the Arizona Statewide Conservation Agreement for Roundtail Chub (*G. robusta*), Headwater Chub, Flannelmouth Sucker (*Catostomus latipinnis*), Little Colorado River Sucker (*Catostomus* spp.), Bluehead Sucker (*C. discobolus*), and Zuni Bluehead Sucker (*C. discobolus yarrowi*), which is now final. The New Mexico Department of Game and Fish recently listed the headwater chub as endangered and created a recovery plan for the species, Colorado River Basin Chubs (Roundtail Chub, Gila Chub (*G. intermedia*), and Headwater Chub) Recovery Plan, which was approved by the New Mexico State Game Commission on November 16, 2006. Both the Arizona Agreement and the New Mexico Recovery Plan recommend preservation and enhancement of extant populations and restoration of historical headwater-chub populations. The recovery and conservation actions prescribed by Arizona and New Mexico plans, which we believe will reduce and remove threats to this species, will require further discussions and authorizations before they can be implemented, but several of the actions are being planned. Although threats are ongoing, new information indicates long-term persistence and stability of existing populations. Surveys conducted in 2006-2007 found a new population and determined that the Fossil Creek population is now stable-secure. Currently 10 of the 17 extant populations are considered stable based on abundance and evidence of recruitment. Based on our assessment, threats (e.g., nonnative species, habitat loss from land uses) remain imminent but are now of a moderate magnitude because the threat of nonnative species and habitat destruction appear to be of

a lower magnitude than previously thought because all populations are continuing to persist, and have persisted over approximately 15 years of surveys on average, and some populations such as the upper Gila River are now considered stable. Thus we changed the LPN from a 2 to an 8 for this species.

Clams

Texas hornshell (*Popenaias popei*) – The following summary is based on information contained in our files and information provided by the New Mexico Department of Game and Fish and Texas Parks and Wildlife Department. No new information was provided in the petition received on May 11, 2004. The Texas hornshell is a freshwater mussel found in the Black River in New Mexico, and the Rio Grande and the Devils River in Texas. Until March 2008, the only known extant populations were in New Mexico's Black River and one locality in the Rio Grande near Laredo, Texas. In March 2008, two new localities were confirmed in Texas – one in the Devils River and one in the mainstem Rio Grande in the Rio Grande Wild and Scenic River segment downstream of Big Bend National Park.

The primary threats to this species are habitat alterations such as stream bank channelization, impoundments, and diversions for agriculture and flood control; contamination of water by oil and gas activity; alterations in the natural riverine hydrology; and increased sedimentation from prolonged overgrazing and loss of native vegetation. Although riverine habitats throughout the species' known occupied range are under constant threat from these ongoing or potential activities, numerous conservation actions to benefit the species are underway in New Mexico, including the completion of a state recovery plan for the species and the drafting of a Candidate Conservation Agreement with Assurances, and are beginning in Texas. We changed the LPN from a 2 to an 8 based on our conclusion that these conservation actions have reduced the magnitude of threats from high to moderate. This change in the magnitude of threat is due to the discovery of previously unknown locations where the species persists, as well as the implementation of recovery planning and conservation actions that are underway in New Mexico, and are beginning in Texas. The threats are still occurring, and thus remain imminent.

Slabside pearlymussel (*Lexingtonia dolabelloides*) – The following summary is based on information contained in our files. The slabside pearlymussel is a freshwater mussel (Unionidae) endemic to the Cumberland and Tennessee River systems (Cumberlandian Region) in Alabama, Kentucky, Tennessee, and Virginia. It requires shoal habitats in free-flowing rivers to survive and successfully recruit new individuals into its populations.

Habitat destruction and alteration (e.g., impoundments, sedimentation, and pollutants) are the chief factors contributing to the decline of this species, which has been extirpated from numerous regional streams and is no longer found in Kentucky. The slabside pearlymussel was historically known from at least 32 streams, but is currently restricted to no more than 10 isolated stream segments. Current status information for most of the 10 populations deemed to be extant is available from recent periodic sampling efforts (sometimes annually) and other field studies. Comprehensive surveys have taken place in the Middle and North Forks Holston River, Paint Rock River, and Duck River in the past several years. Based on recent information, the overall population of the slabside pearlymussel is declining rangewide. Of the five streams in which the species remains in good numbers (e.g., Clinch, North and Middle Forks Holston, Paint Rock, Duck Rivers), the Middle and upper North Fork Holston Rivers have undergone drastic recent declines, while the Clinch population has been in a longer-term decline. Most of the remaining five populations (e.g., Powell River, Big Moccasin Creek, Hiwassee River, Elk River, Bear Creek) have doubtful viability, and several if not all of them may be on the verge of extirpation.

The threats remain high in magnitude, since all populations of this species are severely affected in numerous ways (impoundments, sedimentation, small population size, isolation of populations, gravel mining, municipal pollutants, agricultural runoff, nutrient enrichment, and coal processing pollution) which result in mortality and/or reduced reproductive output. Since the threats are ongoing, they are imminent. Therefore, to help ensure consistency in the application of our listing priority process, we changed the LPN from a 5 to a 2 because the threats are imminent and high in magnitude.

Snails

Fat-whorled pondsnail (*Stagnicola bonnevillensis*) – The fat-whorled pondsnail, also known as the Bonneville pondsnail, occupies four spring pools north of the Great Salt Lake in Box Elder County, Utah. The number of individuals is unknown, and the total known occupied habitat is less than 1 hectare (2.45 acres). The primary threat has been chemical contamination of the groundwater. Significant actions are under way to remediate this threat, including implementation of a Corrective Action Plan to characterize and remediate groundwater contamination and implementation of a site management plan. Also, a groundwater model and risk assessment is being developed. The CAP is being implemented, and conservation measures are currently being monitored for effectiveness. Because these efforts have been under way for a sufficient period to reduce the threat from contamination, the magnitude of threats is reduced from moderate to low, and the threat is now nonimminent. Therefore, we have changed the listing priority from an 8 to an 11 for this species.

Elongate mud meadows springsnail (*Pyrgulopsis notidicola*) – The following summary is based on information contained in our files. *Pyrgulopsis notidicola* is endemic to Soldier Meadow, which is located at the northern extreme of the western arm of the Black Rock Desert in the transition zone between the Basin and Range Physiographic Province and the Columbia Plateau Province, Humboldt County, Nevada. The type locality, and the only known location of the species, occurs in a stretch of thermal (between 45° and 32° Celsius, 113° and 90° Fahrenheit) aquatic habitat that is approximately 600 m (1,968 ft) long and 2 m (6.7 ft) wide. *Pyrgulopsis notidicola* occurs only in shallow, flowing water on gravel substrate. The species does not occur in deep water (i.e., impoundments) where water velocity is low, gravel substrate is absent, and sediment levels are high.

The species and its habitat are threatened by recreational use in the areas where it occurs, as well as by the ongoing impacts of past water diversions and livestock grazing and current off-highway vehicle travel. Conservation measures implemented recently by the Bureau of Land Management include the installation of fencing to exclude livestock, wild horses, burros and other large mammals; closing of access roads to spring, riparian, and wetland areas and the limiting of vehicles to designated routes; the establishment of a designated campground away from the habitats of sensitive species; the installation of educational signage; and increased staff presence, including law enforcement and a volunteer site steward during the 6–month period of peak visitor use. These conservation measures have reduced the magnitude of threats to the

species to moderate; all remaining threats are nonimminent and involve long-term changes to the habitat for the species resulting from past impacts. Therefore, we have changed the LPN from 2 to 11.

Insects

Mardon skipper (*Polites mardon*) – The following summary is based on information contained in our files and the petition we received on December 24, 2002. The Mardon skipper is a northwestern butterfly with a remarkably disjunct range. Currently this species is known from four widely separated regions: south Puget Sound region, southern Washington Cascades, Siskiyou Mountains of southern Oregon, and coastal northwestern California/southern Oregon. The number of documented locations for the species has increased from fewer than 10 in 1997 to more than 100 rangewide in 2008. New site locations have been documented in each year that targeted surveys have been conducted since 1999. In the past 8 years, significant local populations have been located in the Washington Cascades and in Southern Oregon, with a few local sites supporting populations of hundreds of Mardon skippers.

The Mardon skipper spends its entire life cycle in one location, often on the same grassland patch. The dispersal ability of Mardon skipper is restricted. Threats to the Mardon skipper include direct impacts to individuals and local populations by off-road vehicle use, livestock grazing, and pesticide drift. Habitat destruction or modification through conifer encroachment, invasive nonnative plants, roadside maintenance, and grassland/meadow management activities such as prescribed burning and mowing are also threats. However, these threats have been substantially reduced due to protections provided by State and Federal special status species programs. The magnitude of the threats is moderate because current regulatory mechanisms associated with State and Federal special status species programs afford a relatively high level of protection from additional habitat loss or destruction across most of the species' range. Threats are imminent because all sites within the species' range currently have one or more identified threats that are resulting in direct impacts to individuals within the populations, or a gradual loss or degradation of the species' habitats. Mardon skippers face a variety of threats that may occur at any time at any of the locations. Low numbers of individuals have been found at most of the known locations. Only a few locations are known to harbor greater than 100 individuals, and specific locations could easily be lost by changes in vegetation composition or from the threat of wildfire. The great distances between the known locations for the species would not allow for dispersal of the species between populations; thus, loss of any population could lead to extirpation of the species at any of these locations. However, the discovery of new populations and the wide geographic range for the Mardon skipper provides a buffer against threats that could destroy all existing habitat simultaneously or jeopardize the continued existence of the species.

Since the threats are ongoing, they are imminent. Therefore, to help ensure consistency in the application of our listing priority process, we changed the LPN to reflect the fact that the threats are imminent. At the same time, for the reasons described above, the threats are now moderate in magnitude. Therefore, we changed the listing priority number from a 5 to an 8 for the Mardon skipper.

Coral Pink Sand Dunes tiger beetle (*Cicindela albissima*) – The following summary is based on information contained in our files and the petition received April 25, 1994. The Coral Pink Sand Dunes tiger beetle occurs only at the Coral Pink Sand Dunes, approximately 7 miles west of Kanab, Kane County, in south-central Utah. It is restricted to a small part of the dune field, situated at an elevation of about 1,820 m (6,000 ft).

The beetle's habitat is being adversely affected by ongoing, recreational off-road vehicle use that is destroying and degrading the beetle's habitat, especially the interdunal swales used by the larvae. The continued survival of the beetle depends on the preservation of its habitat. The two agencies that manage the dunes field, the Utah Department of Parks and Recreation and the Bureau of Land Management, have restricted recreational off-road vehicle use in some areas, which reduces impacts. However, the protected areas may not be of sufficient size to enable the population to increase in size, and off-road vehicle use continues outside of the protected areas. Ongoing monitoring and research has documented that conservation measures have failed to lessen population declines. The beetle's population is also vulnerable to over-collecting by professional and hobby tiger beetle collectors. The taxon was previously recognized as a full species, resulting in a change in the listing priority from a 9 to an 8, based on imminent threats of a low to moderate magnitude. The magnitude of the threat from off-road vehicle use is now high, since this threat results in direct mortality to adult beetles, reduces available prey, and disturbs and desiccates the microhabitat of the larvae, and in tandem with drought, continues to cause steady declines in the tiger beetle population. The threats continue to be ongoing and are, therefore, imminent. Therefore, we changed the LPN from an 8 to a 2.

Flowering plants

Churchill Narrows buckwheat (*Eriogonum diatomaceum*) – The following information is based on information contained in our files. *Eriogonum diatomaceum* is restricted to chalky, diatomaceous outcrops between 1,311 and 1,390 meters (m) (4,300 and 4,560 feet (ft)) elevation in the Churchill Narrows located in the Pine Nut Mountains, Lyon County, Nevada.

Field surveys during 2005 have shown that the habitat of nearly all the 15 known occurrences of *E. diatomaceum* is subject to exploration and potential development of existing mining claims. Observations in 2003 confirmed that mining activities have had direct and indirect impacts on *E. diatomaceum* in the recent past. Mineral development must continue to be considered a threat of high magnitude because all known populations of *E. diatomaceum* occur within existing mining claims on a substrate with economic potential. However, because previous applications to develop these industrial mineral deposits have been withdrawn, we no longer consider mining to pose an imminent threat to the species. Other threats to the species from trampling and soil disturbance by livestock and other land uses are likely to have localized impacts and to be cumulative over time; we do not consider these activities to pose an imminent threat to the species. Nevertheless, all known populations are small and current regulatory mechanisms in place are inadequate in protecting the species throughout its range. *Eriogonum diatomaceum* is considered threatened by the Nevada Native Plant Society and was added to the Nevada State List of critically endangered and threatened plants. Due to the nonimminent threats of high magnitude, we have changed the LPN from a 2 to a 5 for this species.

Candidate Removals

As summarized below, we have evaluated the threats to the following two species and considered factors that, individually and in combination, currently or potentially could pose a risk to these species and their habitat. After a review of the best available

scientific and commercial data, we conclude that listing these two species under the Endangered Species Act is not warranted because the species are not likely to become endangered species within the foreseeable future throughout all or a significant portion of their range. Therefore, for each of these species we find that proposing a rule to list it is not warranted, and we no longer consider it to be a candidate species for listing. We will continue to monitor the status of these species, and to accept additional information and comments concerning this finding. We will reconsider our determination for each species in the event that new information indicates that the threats to the species are of a considerably greater magnitude or imminence than identified through assessments of information contained in our files, as summarized here.

Snails

Ogden mountainsnail (formerly considered to be *Oreohelix peripherica wasatchensis*) – The Ogden mountainsnail was previously thought to be a subspecies occurring at a single site near the mouth of Ogden Canyon in Weber County, Utah. The subspecies was considered to be vulnerable to extirpation from stochastic or human-caused events due to its restricted range, its proximity to an expanding residential area, and impacts from relatively heavy recreational use. Recent molecular phylogenetic studies have clarified that what was previously classified as *Oreohelix peripherica wasatchensis* is actually two distinct clades (i.e., taxa descending from a common ancestor) rather than being a separate subspecies: one clade is part of a different species, *O. strigosa*, and the other is part of a different subspecies, *O. p. peripherica* Because *O. p. wasatchensis* is no longer recognized as a valid subspecies, it is not a listable entity under the Act. Therefore, we find that listing *O. p. wasatchensis* is not warranted, and we have removed it from candidate status.

Both *O. strigosa* and *O. p. peripherica* are widespread and abundant. Our assessment shows that threats to the clades of these taxa at the Ogden Canyon site are not affecting the overall status of *O. strigosa* or *O. p. peripherica* such that either taxon is likely to become in danger of extinction within the foreseeable future throughout all or a significant portion of its range. Consequently, we find that listing is not warranted for either *O. strigosa* or *O. p. peripherica*.

Flowering Plants

Indigofera trita subsp. *scabra* (formerly *Indigofera mucronata* var. *keyensis*) (Florida indigo or Asian indigo) – The following summary is based on information contained in our files. No new information was provided in the petition we received on May 11, 2004. In 2007 we became aware of new information regarding this plant's taxonomic status. We now believe the most appropriate name for Florida indigo is *I. trita* subsp. *scabra*. The current understanding is that this plant is widespread, ranging widely from south Florida and the Caribbean to Asia and Africa. We have only general information on this plant's status outside of the United States. In Florida, this plant occurs in coastal rock barrens, ecotone rock barren areas, and scraped areas mimicking rock barren habitat. Based upon available data, there are 12 occurrences of Florida indigo on eight islands in the upper and middle Florida Keys, in Monroe County; half of the original occurrences in the Keys are now extirpated, as are historic occurrences on mainland Florida in Collier and Miami-Dade Counties. Most occurrences in Florida are small; total population size is probably close to 3,000 individuals. In the United States, Florida indigo is threatened by habitat loss, even on public lands, as well as habitat loss and degradation from exotic plants on all sites. Shading by hardwoods is a problem at approximately half of the sites. Planned restoration activities, illegal dumping, and trespass have also been identified as threats. Florida indigo is vulnerable to natural disturbances, such as hurricanes, tropical storms, and storm surges; however, these factors may also work to maintain coastal rock barren habitat in the long-term. Sea level rise is considered a long-term threat that will continue.

Although threats remain in Florida, the Florida indigo is now considered to be a taxon that is widely distributed. We are not aware of threats elsewhere in its considerable range; the species does not warrant listing throughout its entire range. We have analyzed whether the Florida population is a significant portion of the range. Based on our evaluation of this population's low level of contribution toward the resiliency, redundancy, and representation of the species as a whole, we conclude that the Florida population of the Florida indigo is not a significant portion of the range. Based on findings and analysis in our updated assessment, we conclude that listing this species under the Endangered Species Act is not warranted throughout all or a significant portion of its range. The species no longer meets our definition of a candidate, and we have removed it from candidate status.

Petition Findings

The Act provides two mechanisms for considering species for listing. One method allows the Secretary, on his own initiative, to identify species for listing under the standards of section 4(a)(1). We implement this through the candidate program, discussed above. The second method for listing a species provides a mechanism for the public to petition us to add a species to the Lists. Under section 4(b)(3)(A), when we receive such a petition, we must determine within 90 days, to the maximum extent practicable, whether the petition presents substantial information that listing may be warranted (a ''90–day finding''). If we make a positive 90–day finding, we must promptly commence a status review of the species under section 4(b)(3)(A); we must then make and publish one of three possible findings within 12 months of the receipt of the petition (a ''12–month finding''):

1. The petitioned action is not warranted;

2. The petitioned action is warranted (in which case we are required to promptly publish a proposed regulation to implement the petitioned action; once we publish a proposed rule for a species, section 4(b)(5) and 4(b)(6) govern further procedures regardless of whether we issued the proposal in response to a petition); or

3. The petitioned action is warranted but (a) the immediate proposal of a regulation and final promulgation of regulation implementing the petitioned action is precluded by pending proposals, and (b) expeditious progress is being made to add qualified species to the lists of endangered or threatened species. (We refer to this as a ''warranted-but-precluded finding.'')

Section 4(b)(3)(C) of the Act requires that when we make a warranted-but-precluded finding on a petition, we are to treat such a petition as one that is resubmitted on the date of such a finding. Thus, we are required to publish new 12–month findings on these ''resubmitted'' petitions on an annual basis.

On December 5, 1996, we made a final decision to redefine ''candidate species'' to mean those species for which the Service has on file sufficient information on biological vulnerability and threat(s) to support issuance of a proposed rule to list, but for which issuance of the proposed rule is

precluded (61 FR 64481; December 6, 1996). Therefore, the standard for making a species a candidate through our own initiative is identical to the standard for making a warranted-but-precluded 12–month petition finding on a petition to list, and we add all petitioned species for which we have made a warranted-but-precluded 12–month finding to the candidate list.

This publication provides notice of substantial 90–day findings and the warranted-but-precluded 12–month findings pursuant to section 4(b)(3) for candidate species listed on Table 1 that we identified on our own initiative, and that subsequently have been the subject of a petition to list. Even though all candidate species identified through our own initiative already have received the equivalent of substantial 90–day and warranted-but-precluded 12–month findings, we reviewed the status of the newly petitioned candidate species and through this CNOR are publishing specific section 4(b)(3) findings (i.e., substantial 90–day and warranted-but-precluded 12–month findings) in response to the petitions to list these candidate species. We publish these findings as part of the first CNOR following receipt of the petition.

Pursuant to section 4(b)(3)(C)(i) of the Act, once a petition is filed regarding a candidate species, we must make a 12–month petition finding in compliance with section 4(b)(3)(B) of the Act at least once a year, until we publish a proposal to list the species or make a final not-warranted finding. We make these annual findings for petitioned candidate species through the CNOR.

Section 4(b)(3)(C)(iii) of the Act requires us to ''implement a system to monitor effectively the status of all species'' for which we have made a warranted-but-precluded 12–month finding, and to ''make prompt use of the [emergency listing] authority [under section 4(b)(7)] to prevent a significant risk to the well being of any such species.'' The CNOR plays a crucial role in the monitoring system that we have implemented for all candidate species by providing notice that we are actively seeking information regarding the status of those species. We review all new information on candidate species as it becomes available, prepare an annual species assessment form that reflects monitoring results and other new information, and identify any species for which emergency listing may be appropriate. If we determine that emergency listing is appropriate for any candidate, whether it was identified through our own initiative or through the petition process, we will make prompt use of the emergency listing authority under section 4(b)(7). We have been reviewing and will continue to review, at least annually, the status of every candidate, whether or not we have received a petition to list it. Thus, the CNOR and accompanying species assessment forms also constitute the Service's annual finding on the status of petitioned species pursuant to section 4(b)(3)(C)(i).

On June 20, 2001, the United States Court of Appeals for the Ninth Circuit held that the 1999 CNOR (64 FR 57534; October 25, 1999) did not demonstrate that we fulfilled the second component of the warranted-but-precluded 12–month petition findings for the Gila chub and Chiracahua leopard frog (*Center for Biological Diversity* v. *Norton*, 254 F.3d 833 (9th Cir. 2001)). The court found that the one-line designation in the table of candidates in the 1999 CNOR, with no further explanation, did not satisfy section 4(b)(3)(B)(iii)'s requirement that the Service publish a finding ''together with a description and evaluation of the reasons and data on which the finding is based.'' The court suggested that this one-line statement of candidate status also precluded meaningful judicial review.

On June 21, 2004, the United States District Court for Oregon agreed that we can use the CNOR as a vehicle for making petition findings and that our reasoning for why listing is precluded does not need to be based on an assessment at a regional level (as opposed to a national level) (*Center for Biological Diversity* v. *Norton* Civ. No. 03-1111-AA (D. Or.)). However, this court found that our discussion on why listing the candidate species were precluded by other actions lacked specificity; in the list of species that were the subject of listing actions that precluded us from proposing to list candidate species, we did not state the specific action at issue for each species in the list and we did not indicate which actions were court-ordered.

On June 22, 2004, in a similar case, the United States District Court for the Eastern District of California also concluded that our determination of preclusion may appropriately be based on a national analysis (*Center for Biological Diversity* v. *Norton* No. CV S-03-1758 GEB/DAD (E.D. Cal.)). This court also found that the Act's imperative that listing decisions be based solely on science applies only to the determination about whether listing is warranted, not the question of when listing is precluded.

On March 24, 2005, the United States District Court for the District of Columbia held that we may not consider critical habitat activities in justifying our inability to list candidate species, requiring that we justify both our preclusion findings and our demonstration of expeditious progress by reference to listing proceedings for unlisted species (*California Native Plant Society v. Norton*, Civ. No. 03-1540 (JR) (D.D.C.)). The court further found that we must adequately itemize priority listings, explain why certain species are of high priority, and explain why actions on these high-priority species preclude listing species of lower priority. The court approved our reliance on national rather than regional priorities and workload in establishing preclusion and approved our basic explanation that listing candidate species may be precluded by statutorily mandated deadlines, court-ordered actions, higher-priority listing activities, and a limited budget.

In this CNOR we continue to incorporate information that addresses the courts' concerns. We include a description of the reasons why the listing of every petitioned candidate species is both warranted and precluded at this time. We make our determinations of preclusion on a nationwide basis to ensure that the species most in need of listing will be addressed first and also because we allocate our listing budget on a nationwide basis (see below). Regional priorities can also be discerned from Table 1, which includes the lead region and the LPN for each species. Our preclusion determinations are further based upon our budget for listing activities for unlisted species, and we explain the priority system and why the work we have accomplished does preclude action on listing candidate species.

Pursuant to section 4(b)(3)(C)(ii) and the Administrative Procedure Act (5 U.S.C. 551 *et seq.*), any party with standing may challenge the merits of any not-warranted or warranted-but-precluded petition finding incorporated in this CNOR. The analysis included herein, together with the administrative record for the decision at issue (particularly the supporting species assessment form), will provide an adequate basis for a court to review the petition finding.

Nothing in this document or any of our policies should be construed as in any way modifying the Act's requirement that we make a resubmitted 12–month petition finding for each petitioned candidate within 1 year of the date of publication of this CNOR. If we fail to make any such finding on a timely basis, whether through publication of a new CNOR or some

other form of notice, any party with standing may seek judicial review.

In this CNOR, we continue to address the concerns of the courts by including specific information in our discussion on preclusion (see below). In preparing this CNOR, we reviewed the current status of, and threats to, the 174 candidates and 5 listed species for which we have received a petition and for which we have found listing or reclassification from threatened to endangered to be warranted but precluded. We find that the immediate issuance of a proposed rule and timely promulgation of a final rule for each of these species has been, for the preceding months, and continues to be, precluded by higher-priority listing actions. Additional information that is the basis for this finding is found in the species assessments and our administrative record for each species.

Through this CNOR we are making the first 90–day petition finding and 12–month petition finding for *Eriogonum corymbosum* var. *nilesii* (Las Vegas buckwheat) and the New Mexico meadow jumping mouse (*Zapus hudsonius luteus*). We added these species to the candidate list in the last CNOR (published December 6, 2007) and subsequently received petitions for listing. We have not published separate substantial 90–day and warranted-but-precluded 12–month petition findings, but are making those findings in this CNOR.

Our review included updating the status of, and threats to, petitioned candidate or listed species for which we published findings, pursuant to section 4(b)(3)(B), in the previous CNOR. We have incorporated new information we gathered since the prior finding and, as a result of this review, we are making continued warranted-but-precluded 12–month findings on the petitions for these species.

We have identified the candidate species for which we received petitions by the code ''C*'' in the category column on the left side of Table 1. The immediate publication of proposed rules to list these species was precluded by our work on higher-priority listing actions, listed below, during the period from October 1, 2007, through September 30, 2008. We will continue to monitor the status of all candidate species, including petitioned species, as new information becomes available to determine if a change in status is warranted, including the need to emergency-list a species under section 4(b)(7) of the Act.

In addition to identifying petitioned candidate species in Table 1 below, we also present brief summaries of why these particular candidates warrant listing. More complete information, including references, is found in the species assessment forms. You may obtain a copy of these forms from the Regional Office having the lead for the species, or from the Fish and Wildlife Service's Internet website: *http://endangered.fws.gov/*. As described above, under section 4 of the Act we may identify and propose species for listing based on the factors identified in section 4(a)(1), and section 4 also provides a mechanism for the public to petition us to add a species to the lists of species determined to be threatened species or endangered species under the Act. Below we describe the actions that continue to preclude the immediate proposal and final promulgation of a regulation implementing each of the petitioned actions for which we have made a warranted-but-precluded finding, and we describe the expeditious progress we are making to add qualified species to the lists of endangered or threatened species.

Preclusion and Expeditious Progress

Preclusion is a function of the listing priority of a species in relation to the resources that are available and competing demands for those resources. Thus, in any given fiscal year (FY), multiple factors dictate whether it will be possible to undertake work on a proposed listing regulation or whether promulgation of such a proposal is warranted but precluded by higher-priority listing actions.

The resources available for listing actions are determined through the annual Congressional appropriations process. The appropriation for the Listing Program is available to support work involving the following listing actions: proposed and final listing rules; 90–day and 12–month findings on petitions to add species to the Lists of Endangered and Threatened Wildlife and Plants (Lists) or to change the status of a species from threatened to endangered; annual determinations on prior warranted-but- precluded petition findings as required under section 4(b)(3)(C)(i) of the Act; critical habitat petition findings, proposed and final rules designating critical habitat; and litigation-related, administrative, and program management functions (including preparing and allocating budgets, responding to Congressional and public inquiries, and conducting public outreach regarding listing and critical habitat). The work involved in preparing various listing documents can be extensive, and may include, but is not limited to: gathering and assessing the best scientific and commercial data available and conducting analyses used as the basis for our decisions; writing and publishing documents; and obtaining, reviewing, and evaluating public comments and peer review comments on proposed rules and incorporating relevant information into final rules. The number of listing actions that we can undertake in a given year also is influenced by the complexity of those listing actions; that is, more complex actions generally are more costly. For example, during the past several years, the cost (excluding publication costs) for preparing a 12–month finding, without a proposed rule, has ranged from approximately $11,000 for one species with a restricted range that requires a relatively uncomplicated analysis to $305,000 for another species that is wide-ranging and requires a complex analysis.

We cannot spend more than is appropriated for the Listing Program without violating the Anti-Deficiency Act (see 31 U.S.C. 1341(a)(1)(A)). In addition, in FY 1998 and for each fiscal year since then, Congress has placed a statutory cap on funds which may be expended for the Listing Program, equal to the amount expressly appropriated for that purpose in that fiscal year. This cap was designed to prevent funds appropriated for other functions under the Act (for example, recovery funds for removing species from the Lists), or for other Service programs, from beingused for Listing Program actions (see House Report 105-163, 105th Congress, 1st Session, July 1, 1997).

Recognizing that designation of critical habitat for species already listed would consume most of the overall Listing Program appropriation, Congress also put a critical habitat subcap in place in FY 2002, and has retained it each subsequent year to ensure that some funds are available for other work in the Listing Program: ''The critical habitat designation subcap will ensure that some funding is available to address other listing activities'' (House Report No. 107 - 103, 107th Congress, 1st Session, June 19, 2001). In FY 2002 and each year until FY 2006, the Service has had to use virtually the entire critical habitat subcap to address court-mandated designations of critical habitat, and consequently none of the critical habitat subcap funds have been available for other listing activities. In FY 2007, we were able to use some of the critical habitat subcap funds to fund proposed listing determinations for high-priority candidate species; however, in FY 2008 we were unable to do this because of all of the critical habitat subcap funds were needed to

address our workload for designating critical habitat.

Thus, through the listing cap, the critical habitat subcap, and the amount of funds needed to address court-mandated critical habitat designations, Congress and the courts have in effect determined the amount of money available for other listing activities. Therefore, the funds in the listing cap, other than those needed to address court-mandated critical habitat for already listed species, represent the resources we must take into consideration when we make our determinations of preclusion and expeditious progress.

Congress also recognized that the availability of resources was the key element in deciding whether, when making a 12–month petition finding, we would prepare and issue a listing proposal or instead make a warranted-but-precluded finding for a given species. The Conference Report accompanying Pub. L. 97-304, which established the current statutory deadlines and the warranted-but-precluded finding, states (in a discussion on 90–day petition findings that by its own terms also covers 12–month findings) that the deadlines were ''not intended to allow the Secretary to delay commencing the rulemaking process for any reason other than that the existence of pending or imminent proposals to list species subject to a greater degree of threat would make allocation of resources to such a petition [that is, for a lower-ranking species] unwise.'' Taking into account the information presented above, in FY 2008, the outer parameter within which ''expeditious progress'' must be measured is that amount of progress that could be achieved by spending $8,206,940, which was the amount available in the Listing Program appropriation that was not within the critical habitat subcap (because all of the funds within the subcap were needed in order to complete court-mandated critical habitat actions).

Our process is to make our determinations of preclusion on a nationwide basis to ensure that the species most in need of listing will be addressed first and also because we allocate our listing budget on a nationwide basis. The $8,206,940 was used to fund work in the following categories: compliance with court orders and court-approved settlement agreements requiring that petition findings or listing determinations be completed by a specific date; section 4 (of the Act) listing actions with absolute statutory deadlines; essential litigation-related, administrative, and listing program management functions; and high-priority listing actions. The allocations for each specific listing action are identified in the Service's FY 2008 Allocation Table (part of our administrative record).

Our decision that a proposed rule to list any of the petitioned candidate species is warranted but precluded includes consideration of its listing priority. In accordance with guidance we published on September 21, 1983, we assign each candidate an LPN of 1 to 12, depending on the magnitude of threats (high vs. moderate to low), immediacy of threats (imminent or nonimminent), and taxonomic status of the species (in order of priority: monotypic genus (a species that is the sole member of a genus); species; or part of a species (subspecies, distinct population segment, or significant portion of the range)). The lower the listing priority number, the higher the listing priority (that is, a species with an LPN of 1 would have the highest listing priority). In addition to being precluded by lack of available funds, work on proposed rules for candidates with lower priority (i.e., those that have LPNs of 4–12) is also precluded by the need to issue proposed rules for higher-priority candidate species facing high-magnitude, imminent threats (i.e., LPNs of 1–3).

In FY 2007, we had more than 120 species with an LPN of 2. Therefore, we further ranked the candidate species with an LPN of 2 by using the following extinction-risk type criteria: International Union for the Conservation of Nature and Natural Resources (IUCN) Red list status/rank, Heritage rank (provided by NatureServe), Heritage threat rank (provided by NatureServe), and species currently with fewer than 50 individuals, or 4 or fewer populations. Those species with the highest IUCN rank (critically endangered), the highest Heritage rank (G1), the highest Heritage threat rank (substantial, imminent threats), and currently with fewer than 50 individuals, or fewer than 4 populations, comprised a list of approximately 40 candidate species. These 40 candidate species have had the highest priority to receive funding to work on a proposed listing determination. As we work on proposed listing rules for these 40 candidates, we are applying the ranking criteria to the next group of candidates with an LPN of 2 and 3 to determine the next set of highest priority candidate species.

To be more efficient in our listing process, as we work on proposed rules for these species in the next several years, we are preparing multi-species proposals when appropriate, and these may include species with lower priority if they overlap geographically or have the same threats as a species with an LPN of 2. In addition, available staff resources are also a factor in determining which high-priority species will receive funding. Finally, proposed rules for reclassification of threatened species to endangered are lower priority, since as listed species, they are already afforded the protection of the Act and implementing regulations.

Thus, we continue to find that proposals to list the petitioned candidate species included in Table 1 are all warranted but precluded, except for the highest priority candidate species which are listed in the tables below as having received funding in FY2008 for listing activities.

As explained above, a determination that listing is warranted but precluded must also demonstrate that expeditious progress is being made to add and remove qualified species to and from the Lists of Endangered and Threatened Wildlife and Plants. (Although we do not discuss it in detail here, we are also making expeditious progress in removing species from the list under the Recovery program, which is funded by a separate line item in the budget of the Endangered Species Program. As explained above in our description of the statutory cap on Listing Program funds, the Recovery Program funds and actions supported by them cannot be considered in determining expeditious progress made in the Listing Program.) As with our ''precluded'' finding, expeditious progress in adding qualified species to the Lists is a function of the resources available and the competing demands for those funds. Given that limitation, we find that we made expeditious progress in FY 2008 in the Listing Program. This progress included preparing and publishing the following determinations:

FY 2008 Completed Listing Actions

Publication Date	Title	Actions	FR Pages
10/09/2007	90-Day Finding on a Petition to List the Black-Footed Albatross (Phoebastria nigripes) as Threatened or Endangered	Notice of 90–day Petition Finding, Substantial	72 FR 57278-57283
10/09/2007	90-Day Finding on a Petition To List the Giant Palouse Earthworm as Threatened or Endangered	Notice of 90–day Petition Finding, Not substantial	72 FR 57273-57276
10/23/2007	90-Day Finding on a Petition To List the Mountain Whitefish (Prosopium williamsoni) in the Big Lost River, ID, as Threatened or Endangered	Notice of 90–day Petition Finding, Not substantial	72 FR 59983-9989
10/23/2007	90-Day Finding on a Petition To List the Summer-Run Kokanee Population in Issaquah Creek, WA, as Threatened or Endangered	Notice of 90–day Petition Finding, Not substantial	72 FR 59979-59983
11/08/2007	Response to Court on Significant Portion of the Range, and Evaluation of Distinct Population Segments, for the Queen Charlotte Goshawk	Response to Court	72 FR 63123-63140
12/13/2007	12-Month Finding on a Petition To List the Jollyville Plateau salamander (Eurycea tonkawae) as Endangered With Critical Habitat	Notice of 12–month Petition Finding, Warranted but Precluded	72 FR 1039-71054
1/08/2008	90-Day Finding on a Petition To List the Pygmy Rabbit (Brachylagus idahoensis) as Threatened or Endangered	Notice of 90–day Petition Finding, Substantial	73 FR 1312-1313
1/10/2008	90-Day Finding on Petition To List the Amargosa River Population of the Mojave Fringe-Toed Lizard (Uma scoparia) as Threatened or Endangered With Critical Habitat	Notice of 90–day Petition Finding, Substantial	73 FR 1855-1861
1/24/2008	12-Month Finding on a Petition To List the Siskiyou Mountains Salamander (Plethodon stormi) and Scott Bar Salamander (Plethodon asupak) as Threatened or Endangered	Notice of 12–month Petition Finding, Not Warranted	73 FR 4379-4418
2/05/2008	12-Month Finding on a Petition To List the Gunnison's Prairie Dog as Threatened or Endangered	Notice of 12–month Petition Finding, Warranted but Precluded	73 FR 6660-6684
02/07/2008	12-Month Finding on a Petition To List the Bonneville Cutthroat Trout (Oncorhynchus clarki utah) as Threatened or Endangered	Notice of Review	73 FR 7236-7237
02/19/2008	Listing Phyllostegia hispida (No Common Name) as Endangered Throughout Its Range	Proposed Listing, Endangered	73 FR 9078-9085
02/26/2008	Initiation of Status Review for the Greater Sage-Grouse (Centrocercus urophasianus) as Threatened or Endangered	Notice of Status Review	73 FR 10218-10219
03/11/2008	12-Month Finding on a Petition To List the North American Wolverine as Endangered or Threatened	Notice 12–month petition finding, Not warranted	73 FR 12929-12941
03/20/2008	90-Day Finding on a Petition To List the U.S. Population of Coaster Brook Trout (Salvelinus fontinalis) as Endangered	Notice of 90–day Petition Finding, Substantial	73 FR 14950-14955
04/29/2008	90-Day Finding on a Petition to List the Western Sage-Grouse (Centrocercus urophasianus phaios) as Threatened or Endangered	Notice of 90–day Petition Finding, Substantial	73 FR 23170-23172
04/29/2008	90-Day Finding on Petitions To List the Mono Basin Area Population of the Greater Sage-Grouse (Centrocercus urophasianus) as Threatened or Endangered	Notice of 90–day Petition Finding, Substantial	73 FR 23173-23175
05/06/2008	Petition To List the San Francisco Bay-Delta Population of the Longfin Smelt (Spirinchus thaleichthys) as Endangered	Notice of 90–day Petition Finding, Substantial	73 FR 24611-24915

FY 2008 Completed Listing Actions—Continued

Publication Date	Title	Actions	FR Pages
05/06/2008	90-Day Finding on a Petition to List Kokanee (Oncorhynchus nerka) in Lake Sammamish, Washington, as Threatened or Endangered	Notice of 90–day Petition Finding, Substantial	73 FR 24915-24922
05/06/2008	12-Month Finding on a Petition to List the White-tailed Prairie Dog (Cynomys leucurus) as Threatened or Endangered	Notice of Status Review	73 FR 24910-24911
05/15/2008	90-Day Finding on a Petition To List the Ashy Storm-Petrel (Oceanodroma homochroa) as Threatened or Endangered	Notice of 90–day Petition Finding, Substantial	73 FR 28080-28084
05/15/2008	Determination of Threatened Status for the Polar Bear (Ursus maritimus) Throughout Its Range; Final Rule	Final Listing, Threatened	73 FR 28211-28303
05/15/2008	Special Rule for the Polar Bear; Interim Final Rule	Interim Final Special Rule	73 FR 28305-28318
05/28/2008	Initiation of Status Review for the Northern Mexican Gartersnake (Thamnophis eques megalops)	Notice of Status Review	73 FR 30596-30598
06/18/2008	90-Day Finding on aPetition To List the Long-Tailed Duck (Clangula hyemalis) as Endangered	Notice of 90–day Petition Finding, Not substantial	73 FR 34686-34692
07/10/2008	90-Day Finding on a Petition To Reclassify the Delta Smelt (Hypomesus transpacificus) From Threatened to Endangered	Notice of 90–day Petition Finding, Substantial	73 FR 39639-39643
07/29/2008	90-Day Finding on a Petition To List the Tucson Shovel-Nosed Snake (Chionactis occipitalis klauberi) as Threatened or Endangered with Critical Habitat	Notice of 90–day Petition Finding, Substantial	73 FR 43905-43910
8/13/2008	Proposed Endangered Status for Reticulated Flatwoods Salamander; Proposed Designation of Critical Habitat for Frosted Flatwoods Salamander and Reticulated Flatwoods Salamander	Proposed Critical Habitat, Proposed Listing, Endangered	73 FR 47257-47324
9/9/2008	12-month Finding on a Petition to List the Bonneville Cutthroat Trout as Threatened or Endangered	Notice 12 month petition finding, Not-warranted	73 FR 52235-52256

Our expeditious progress also included work on listing actions, which were funded in FY 2008, but were not completed in FY 2008 (information on the cost of individual actions are part of our administrative record). These actions are listed below. We have completed all work funded in FY 2008 on all actions under a deadline set by a court. Actions in the middle section of the table are being conducted to meet statutory timelines, that is, timelines required under the Act. Actions in the bottom section of the table are high priority listing actions. These actions include work primarily on species with an LPN of 2, and selection of these species is partially based on available staff resources, and when appropriate, include species with a lower priority if they overlap geographically or have the same threats as the species with the high priority. Including these species together in the same proposed rule results in considerable savings in time and funding as compared to preparing separate proposed rules for each of them in the future.

Actions funded in FY 2008 but not completed in 2008

Species	Action
	Actions Subject to Court Order/Settlement Agreement
NONE	NONE
Actions with Statutory Deadlines	
Phyllostegia hispida	Final listing
Yellow-billed loon	12–month petition finding
Black-footed albatross	12–month petition finding
Mount Charleston blue butterfly	12–month petition finding
Goose Creek milk-vetch	12–month petition finding
Mojave fringe-toed lizard	12–month petition finding

Actions funded in FY 2008 but not completed in 2008—Continued

Species	Action
	Actions Subject to Court Order/Settlement Agreement
White-tailed prairie dog	12–month petition finding
Pygmy rabbit (rangewide)	12–month petition finding
Black-tailed prairie dog	90–day petition finding
Lynx (include New Mexico in listing)	90–day petition finding
Wyoming pocket gopher	90–day petition finding
Dusky Tree Vole1	90–day petition finding
Llanero coqui	90–day petition finding

Actions funded in FY 2008 but not completed in 2008—Continued

Species	Action
	Actions Subject to Court Order/Settlement Agreement
American pika	90–day petition finding
Sacramento Valley Tiger Beetle1	90–day petition finding
Sacramento Mts. checkerspot butterfly	90–day petition finding
206 species	90–day petition finding
475 Southwestern species	90–day petition finding
High Priority Listing Actions	
48 Kauai species1 (includes 31 candidate species: 24 with LPN = 2, 3 with LPN = 3, 1 with LPN = 5, 2 with LPN = 8)	Proposed listing (completed in October 2008)
21 Oahu candidate species (16 plants, 5 damselflies) (18 with LPN = 2, 3 with LPN = 3, 1 with LPN = 9)	Proposed listing
3 southeast aquatic species (Georgia pigtoe, interrupted rocksnail, rough hornsnail)2 (all with LPN = 2)	Proposed listing
Casey's june beetle (LPN = 2)	Proposed listing
Sand dune lizard (LPN = 2)	Proposed listing
2 southwest springsnails (*Pyrgulopsis bernadina* (LPN = 2), *Pyrgulopsis trivialis* (LPN = 2))	Proposed listing
3 southwest springsnails (*Pyrgulopsis chupaderae* (LPN = 2), *Pyrgulopsis gilae* (LPN = 11), *Pyrgulopsis thermalis* (LPN = 11))	Proposed listing

Actions funded in FY 2008 but not completed in 2008—Continued

Species	Action
	Actions Subject to Court Order/Settlement Agreement
2 mussels (rayed bean (LPN = 2), snuffbox No LPN)	Proposed listing
2 mussels (sheepnose (LPN = 2), spectaclecase (LPN = 4),)	Proposed listing
Ozark hellbender3 (LPN = 3)	Proposed listing
Altamaha spinymussel (LPN = 2)	Proposed listing
4 southeast fish (rush darter (LPN = 2), chucky madtom (LPN = 2), Cumberland darter (LPN = 5), laurel dace (LPN = 5))	Proposed listing
2 Colorado plants (Parachute beardtongue (*Penstemon debilis*) (LPN = 2), Debeque phacelia (*Phacelia submutica*) (LPN = 8))	Proposed listing
Pagosa skyrocket (*Ipomopsis polyantha*) (LPN = 2)	Proposed listing

1 These actions were completed in October 2008.

2 Funds for listing actions for 3 of these species were also provided in FY 2007.

3 We funded a proposed rule for this subspecies with an LPN of 3 ahead of other species with LPN of 2, because the threats to the species were so imminent and of a high magnitude that we considered emergency listing if we were unable to fund work on a proposed listing rule in FY 2008.

We also funded work on resubmitted petitions findings for 174 candidate species (species petitioned prior to the last CNOR). We did not update our resubmitted petition finding for the Columbia Basin population of the greater sage-grouse in this notice, as we are considering new information and will update our findings at a later date (see 73 FR 23170, April 29, 2008). We also did not update our resubmitted petition findings for the 66 candidate species for which we are preparing proposed listing determinations; see summaries below regarding publication of these determinations. We also funded revised 12–month petition findings for two candidate species that we are removing from candidate status, which are being published as part of this CNOR (see *Summary of Candidate Removals*). Because the majority of these species were already candidate species prior to our receipt of a petition to list them, we had already assessed their status using funds from our Candidate Conservation Program. We also continue to monitor the status of these species through our Candidate Conservation Program. The cost of updating the species assessment forms and publishing the joint publication of the CNOR and resubmitted petition findings is shared between the Listing Program and the Candidate Conservation Program.

During FY 2008, we also funded work on resubmitted petition findings for uplisting five listed species, for which petitions were previously received.

We have endeavored to make our listing actions as efficient and timely as possible, given the requirements of the relevant law and regulations, and constraints relating to workload and personnel. We are continually considering ways to streamline processes or achieve economies of scale, such as by batching related actions together. Given our limited budget for implementing section 4 of the Act, these actions described above collectively constitute expeditious progress.

Although we have not been able to resolve the listing status of many of the candidates, several programs in the Service contribute to the conservation of these species. In particular, we have a separate budgeted program, the Candidate Conservation program, which focuses on providing technical expertise for developing conservation strategies and agreements to guide voluntary on-the-ground conservation work for candidate and other at-risk species. The main goal of this program is to address the threats facing candidate species. Through this program, we work with our partners (other Federal agencies, State agencies, Tribes, local governments, private landowners, and private conservation organizations) to address the threats to candidate species and other species at-risk. We are currently working with our partners to implement voluntary conservation agreements for more than 140 species covering 5 million acres of habitat.

We are actively working to conserve many candidate species. In some instances, the sustained implementation of strategically designed conservation efforts culminates in making listing

unnecessary for species that are proposed or candidates for listing. Recent examples of species for which listing has been unnecessary due to the contributions of conservation efforts include the Cow Head tui chub, Beaver Cave beetle, Surprising Cave beetle, and Sand Mountain blue butterfly.

Findings for Petitioned Candidate Species

For our revised 12–month petition findings for species we are removing from candidate status, see summaries above under ''*Summary of Candidate Removals*.''

Mammals

Pacific Sheath-tailed Bat, American Samoa DPS (*Emballonura semicaudata semicaudata*) – The following summary is based on information contained in our files. No new information was provided in the petition we received on May 11, 2004. This small bat is a member of the Emballonuridae, an Old World bat family that has an extensive distribution, primarily in the tropics. The Pacific sheath-tailed bat was once common and widespread in Polynesia and Micronesia and it is the only insectivorous bat recorded from a large part of this area. The species as a whole (*E. semicaudata*) occurred on several of the Caroline Islands (Palau, Chuuk, and Pohnpei), Samoa (Independent and American), the Mariana Islands (Guam and the CNMI), Tonga, Fiji, and Vanuatu. While populations appear to be healthy in some locations, mainly in the Caroline Islands, they have declined substantially in other areas, including Independent and American Samoa, the Mariana Islands, Fiji, and possibly Tonga. Scientists recognize four subspecies: *E. s. rotensis*, endemic to the Mariana Islands (Guam and the Commonwealth of the Northern Mariana Islands (CNMI)); *E. s. sulcata*, occurring in Chuuk and Pohnpei; *E. s. palauensis*, found in Palau; and *E. s. semicaudata*, occurring in American and Independent Samoa, Tonga, Fiji, and Vanuatu. This candidate assessment form addresses the distinct population segment (DPS) of *E. s. semicaudata* that occurs in American Samoa.

E. s. semicaudata historically occurred in American and Independent Samoa, Tonga, Fiji, and Vanuatu. It is extant in Fiji and Tonga, but may be extirpated from Vanuatu and Independent Samoa. There is some concern that it is also extirpated from American Samoa, the location of this DPS, where surveys are currently ongoing to ascertain its status. The factors that led to the decline of this subspecies and the DPS are poorly understood; however, current threats to this subspecies and the DPS include habitat loss, predation by introduced species, and its small population size and distribution, which make the taxon extremely vulnerable to extinction due to typhoons and similar natural catastrophes. Thus, the threats are high in magnitude. The Pacific sheath-tailed bat may also by susceptible to disturbance to roosting caves. The LPN for *E. s. semicaudata* is 3 because the magnitude of the threats is high, the threats are ongoing, and therefore, imminent, and the taxon is a distinct population segment of a subspecies.

Pacific Sheath-tailed Bat (*Emballonura semicaudata rotensis*), Guam and the Commonwealth of the Northern Mariana Islands – The following summary is based on information contained in our files. No new information was provided in the petition we received on May 11, 2004. This small bat is a member of the Emballonuridae, an Old World bat family that has an extensive distribution, primarily in the tropics. The Pacific sheath-tailed bat was once common and widespread in Polynesia and Micronesia and it is the only insectivorous bat recorded from a large part of this area. E. *s. rotensis* is historically known from the Mariana Islands and formerly occurred on Guam and in the CNMI on Rota, Aguiguan, Tinian (known from prehistoric records only), Saipan, and possibly Anatahan and Maug. Currently, E. *s. rotensis* appears to be extirpated from all but one island in the Mariana archipelago. The single remaining population of this subspecies occurs on Aguiguan, Commonwealth of the Northern Mariana Islands (CNMI).

Threats to this subspecies have not changed over the past year. The primary threats to the subspecies are ongoing habitat loss and degradation as a result of feral goat (*Capra hircus*) activity on the island of Aguiguan and the taxon's small population size and limited distribution. Predation by nonnative species and human disturbance are also potential threats to the subspecies. The subspecies may be near the point where stochastic events, such as typhoons, are increasingly likely to affect its continued survival. The disappearance of the remaining population on Aguiguan would result in the extinction of the subspecies. Thus, the threats are high in magnitude. The LPN for E. *s. rotensis* remains at 3 because the magnitude of the threats is high, the threats are ongoing, and therefore, imminent, and the taxon is a subspecies.

New England cottontail (*Sylvilagus transitionalis*) – The following summary is based on information contained in our files and information received in response to our notice published on June 30, 2004, when we announced our 90–day petition finding and initiation of a status review (69 FR 39395). We received the petition on August 30, 2000.

The New England cottontail (NEC) is a medium to large sized cottontail rabbit that may reach 1,000 grams in weight, and is one of two species within the genus *Sylvilagus* occurring in New England. New England cottontails are considered habitat specialists, in so far as they are dependent upon early-successional habitats typically described as thickets. The species is the only endemic cottontail in New England. Historically, the NEC occurred in seven states and ranged from southeastern New York (east of the Hudson River) north through the Champlain Valley, southern Vermont, the southern half of New Hampshire, southern Maine and south throughout Massachusetts, Connecticut and Rhode Island. The current range of the NEC has declined substantially and occurrences have become increasingly separated. The species' distribution is fragmented into five apparently isolated metapopulations. The area occupied by the cottontail has contracted from approximately 90,000 sq km to 12,180 sq km. Recent surveys indicate that the long term decline in NEC continues. For example, surveys for the species in early 2008 documented the presence of NEC in 7 of the 23 New Hampshire locations that were known to be occupied in 2002 and 2003. Similarly, surveys in Maine found the species present in 12 of 57 sites identified in an extensive survey that spanned the years 2000 to 2004. Unlike the New Hampshire study, several new sites were documented in Maine during 2008. Some have suggested that the decline in NEC occurrences in 2008 may be attributed to persistent snow cover throughout northern New England during the winter of 2007-2008. Similar surveys to assess trends in other states have not been conducted. It is estimated that less than one third of the occupied sites occur on lands in conservation status and fewer than 10 percent are being managed for early-successional forest species.

The primary threat to the New England cottontail is loss of habitat through succession and alteration. Isolation of occupied patches by areas of unsuitable habitat and high predation rates are resulting in local extirpation of New England cottontails from small patches. The range of the New England cottontail has contracted by 75 percent

or more since 1960 and current land uses in the region indicate that the rate of change, about two percent range loss per year, will continue. Additional threats include competition for food and habitat with introduced eastern cottontails and large numbers of native white-tailed deer; inadequate regulatory mechanisms to protect habitat; and mortality from predation. The magnitude of the threats continues to be high, because they occur rangewide, and have an effect on the survival of the species. They are imminent because they are ongoing. Thus, we retained an LPN of 2 for this species.

Fisher, West Coast DPS (*Martes pennanti*) – The following summary is based on information contained in our files and in the Service's initial warranted-but-precluded finding published in the **Federal Register** on April 8, 2004 (68 FR 18770). The fisher is a carnivore in the family Mustelidae and is the largest member of the genus Martes. Historically, the West Coast population of the fisher extended south from British Columbia into western Washington and Oregon, and in the North Coast Ranges, Klamath-Siskiyou Mountains, and Sierra Nevada in California. The fisher is believed to be extirpated or reduced to scattered individuals from the lower mainland of British Columbia through Washington and in the central and northern Sierra Nevada range in California. Native populations of fisher currently occur in the North Coast Ranges of California, the Klamath- Siskiyou Mountains of northern California and southern Oregon, and in isolated populations occurring in the southern Sierra Nevada in California. Descendents of a fisher reintroduction effort also occur in the southern Cascade Range in Oregon. In January of 2008, the Washington Department of Fish and Wildlife began to implement their fisher recovery goals for the state through a reintroduction effort currently underway in the Olympic National Park.

We lack precise empirical data on West Coast DPS fisher numbers. However, there is a lack of detections over much of the fisher's historic range, even with standardized survey and monitoring efforts in California, Oregon, and Washington. There is also a high degree of genetic relatedness within some populations, and populations of native fisher in California are separated by four times the species' maximum dispersal distance. The above listed factors all indicate that the likely extant fisher populations are small and isolated from one another.

Major threats that fragment or remove key elements of fisher habitat include various forest vegetation management practices such as timber harvest and fuels reduction treatments. Other potential major threats in portions of the range include: uncharacteristically severe wildfire, changes in forest composition and structure, urban and rural development, recreation development, and highways. Major threats to fisher that lead to direct mortality and injury to fisher include: Collisions with vehicles; predation; and viral borne diseases such as rabies, parvovirus, canine distemper, and *Anaplasma phagocytophilum*. Existing regulatory mechanisms on Federal, State, and private lands affect key elements of fisher habitat and do not currently provide sufficient certainty that conservation efforts will be effective or will be implemented. The magnitude of threats is high, as they occur across the range of the DPS resulting in a negative impact on fisher distribution and abundance. However, the threats are nonimminent as the greatest long-term risks to the fisher in its west coast range are the subsequent ramifications of the isolation of small populations and their interactions with the listed threats. The three other areas containing fisher populations appear to be stable or are not rapidly declining based on recent survey and monitoring efforts. Therefore, we assigned an LPN of 6 to this population.

New Mexico meadow jumping mouse (*Zapus hudsonius luteus*) – The following summary is based on information contained in our files and the petition we received October 15, 2008. The New Mexico meadow jumping mouse (jumping mouse) is endemic to New Mexico, Arizona, and a small area of southern Colorado. The jumping mouse nests in dry soils, but uses moist, streamside, dense riparian/wetland vegetation. Recent genetic studies confirm that the New Mexico meadow jumping mouse is a distinct subspecies from other *Zapus hudsonius* subspecies, confirming the currently accepted subspecies designation.

The threats that have been identified are excessive grazing pressure, water use and management, highway reconstruction, development, recreation, and beaver removal. Surveys conducted in 2005 and 2006 documented a drastic decline in the number of occupied localities and suitable habitat across the range of the species in New Mexico and Arizona. Of the original 98 known historical localities, there are now only 9 known extant localities in New Mexico, 2 in Arizona, and an additional 8 localities that have not been surveyed since the early to mid 1990s. Moreover, the highly fragmented nature of its distribution is also a major contributor to the vulnerability of this species and increases the likelihood of very small, isolated populations being extirpated. The insufficient number of secure populations, and the destruction, modification, or curtailment of its habitat, continue to pose the most immediate threats to this species. Because the threats affect the survival of jumping mouse in all but two of the extant localities, the threats are of a high magnitude. These threats are currently occurring and, therefore, are imminent. Thus, we continue to assign an LPN of 3 to this subspecies.

Mazama pocket gopher (*Thomomys mazama* ssp. *couchi, douglasii, glacialis, louiei, melanops, pugetensis, tacomensis, tumuli, yelmensis*) – The following summary is based on information contained in our files. No new information was provided in the petition received December 11, 2002. One subspecies, *T. m. melanops* is found on alpine meadows in Olympic National Park. Another subspecies, *T. m. douglasii* is found in extreme southwest Washington. The other seven subspecies of this pocket gopher are associated with glacial outwash prairies in western Washington. Of these seven subspecies, five are likely still extant (*couchi, glacialis, pugetensis, tumuli,* and *yelmensis*) and two (*T. m. louiei,* and *tacomensis*) are likely extinct. Few glacial outwash prairies remain in Washington today. Historically, such prairies were patchily distributed, but the area they occupied totaled approximately 170,000 acres. Now, residential and commercial development, fire regime alteration, and ingrowth of woody vegetation have further reduced their numbers. In addition, development in or adjacent to these prairies has likely increased predation on Mazama pocket gophers by dogs and cats.

The magnitude of threat is high because the survival of the subspecies is significantly affected by the patchy and isolated distributions of its populations in habitats highly desirable for development and subject to a wide variety of human activities that permanently alter the habitat. Only the Olympic pocket gopher is not threatened with development. The threat of invasive plant species to the quality of a highly specific habitat requirement is high and constant. There are few known populations of each subspecies. A limited dispersal capability, and the loss and degradation of additional patches of appropriate habitat will further isolate populations and increase their vulnerability to extinction. Loss of any of the subspecies

will reduce the genetic diversity and the likelihood of continued existence of the *Thomomys mazama* subspecies complex in Washington.

The threats are ongoing and, therefore, imminent. Gravel pits threaten persistence of one of the remaining subspecies (Roy Prairie (*T. m. glacialis*)), and the largest populations of two other subspecies (Shelton (*T. m. couchi)* and Olympia (*T. m. pugetensis*)) are located on airports with planned development. Yelm pocket gophers are also threatened by proposed development on Fort Lewis, and Tenino pocket gophers (*T. m. tumuli*) are threatened by ongoing development in general. Only the Olympic pocket gopher (*T. m. melanops*) is relatively safe from threats from development due to its more remote location within the Olympic National Park, but this subspecies is still currently affected by invasive plants. Thus, we assign an LPN of 3 to these subspecies.

Palm Springs round-tailed ground squirrel (*Spermophilus tereticaudus chlorus*) –The following summary is based on information contained in our files. No new information was provided in the petition we received on May 11, 2004. The Palm Springs round-tailed ground squirrel is one of four recognized subspecies of round-tailed ground squirrels. The range of this squirrel is limited to the Coachella Valley region of Riverside County, California. Dunes and hummocks associated with *Prosopis glandulosa* var. *torreyana* (honey mesquite) are the primary habitat for the Palm Springs round-tailed ground squirrel and to a lesser extent those dunes and hummocks associated with *Larrea tridentata* (creosote), or other vegetation. Honey mesquite provides a valuable food source for the squirrel and also provides cover and shelter by trapping aeolian sand that form dunes occupied by the Palm Springs round-tailed ground squirrel. Rapid growth of desert cities such as Palm Springs and Palm Desert in the Coachella Valley has raised concerns about the conservation of the narrowly distributed Palm Springs round-tailed ground squirrel. Urban development and drops in the groundwater table have eliminated 90 percent of the honey mesquite in the Coachella Valley. Furthermore, urban development has fragmented habitat occupied by this squirrel thereby isolating populations. The high rate of urban development and associated lowering of the groundwater table that was likely historically responsible for the high losses of honey mesquite sand dune/hummocks habitat continues today. We continue to assign the Palm Springs ground squirrel subspecies an LPN of 3 because the threats are ongoing and are of a high magnitude as they affect a large portion of its' range and significantly affect this subspecies survival.

Southern Idaho ground squirrel (*Spermophilus brunneus endemicus*) – The following summary is based on information contained in our files. No new information was provided in the petition we received on May 11, 2004. The southern Idaho ground squirrel is endemic to four counties in southwest Idaho; its total known range is approximately 425,630 hectares (1,051,752 acres). Threats to southern Idaho ground squirrels include: habitat degradation and fragmentation; direct killing from shooting, trapping, or poisoning; predation; competition with Columbian ground squirrels; and inadequacy of existing regulatory mechanisms. Habitat degradation and fragmentation appear to be the primary threats to the species. Nonnative annuals now dominate much of this species' range, have changed the species composition of vegetation used as forage for the southern Idaho ground squirrel, and have altered the fire regime by accelerating the frequency of wildfire. Habitat deterioration, destruction, and fragmentation contribute to the current patchy distribution of southern Idaho ground squirrels. Based on recent genetic work, southern Idaho ground squirrels are subject to more genetic drift and inbreeding than expected.

Two Candidate Conservation Agreements with Assurances (CCAAs) have been completed for this species in recent years. Both CCAAs include conservation measures that provide additional protection to southern Idaho ground squirrels from recreational shooting and other direct killing on enrolled lands, and also allow the State of Idaho, the Service and BLM to investigate ways of restoring currently degraded habitat. At this time, the acreage enrolled through these two CCAAs is approximately 38,756 hectares (95,767 acres), or 9 percent of the known range. While the ongoing conservation efforts have helped to reduce the magnitude of threats to moderate, habitat degradation remains the primary threat to the species throughout most of its range. This threat is imminent due to the ongoing and increasing prevalence and dominance of nonnative vegetation, and the current patchy distribution of the species. Thus, we assign an LPN of 9 to this subspecies.

Washington ground squirrel (*Spermophilus washingtoni*) – The following summary is based on information contained in our files and in the petition we received on March 2, 2000. The Washington ground squirrel is endemic to the Deschutes-Columbia Plateau sagebrush-steppe and grassland communities in eastern Oregon and south-central Washington. Although widely abundant historically, recent surveys suggest that its current range has contracted toward the center of its historic range. Approximately two-thirds of the Washington ground squirrel's total historic range has been converted to agricultural and residential uses. The most contiguous, least-disturbed expanse of suitable habitat within the species' range occurs on a site owned by Boeing, Inc. and on the Naval Weapons Systems Training Facility near Boardman, Oregon. In Washington, the largest expanse of known suitable habitat occurs on State and Federal lands.

Agricultural, residential, and wind power, among other forms of development, continue to eliminate Washington ground squirrel habitat in portions of its range. Throughout much of its range, Washington ground squirrels are threatened by the establishment and spread of invasive plant species, particularly cheatgrass, which alters available cover, food quantity and quality, and increases fire intervals. Additional threats include habitat fragmentation, recreational shooting, genetic isolation and drift, and predation. Potential threats include disease, drought, and possible competition with related species in disturbed habitat at the periphery of their range. In Oregon, some threats are being addressed as a result of the State listing of this species, and by implementation of the Threemile Canyon Farms Multi-Species Candidate Conservation Agreement with Assurances (CCAA). In Washington, there are currently no formal agreements with private landowners or with State or Federal agencies to protect the Washington ground squirrel. Additionally, no State or Federal management plans have been developed that specifically address the needs of the species or its habitat. Since current and potential threats are widespread and, in some cases, severe, we conclude the magnitude of threats remains high. However, because the CCAA addressed the imminent loss of a large portion of habitat to agriculture, and because there are no other known, large-scale efforts to convert suitable habitat to agriculture, the threats, overall, are not imminent. We, therefore, have kept the LPN at 5 for this species.

Birds

Spotless crake, American Samoa DPS (*Porzana tabuensis*) – The following summary is based on information contained in our files. No new information was provided in the petition we received on May 11, 2004. *P. tabuensis* is a small, dark, cryptic rail found in wetlands and rank scrub or forest in the Philippines, Australia, Fiji, Tonga, Society Islands, Marquesas, Independent Samoa, and American Samoa (Ofu, Tau). The genus Porzana is widespread in the Pacific, where it is represented by numerous island-endemic and flightless species (many of which are extinct as a result of anthropogenic disturbances) as well as several more cosmopolitan species, including *P. tabuensis*. No subspecies of *P. tabuensis* are recognized. The American Samoa population is the only population of spotless crakes under U.S. jurisdiction. The available information indicates that distinct populations of the spotless crake, a species not noted for long-distance dispersal, are definable. The population of spotless crakes in American Samoa is discrete in relation to the remainder of the species as a whole, which is distributed in widely separated locations. Although the spotless crake (and other rails) have dispersed widely in the Pacific, island rails have tended to reduce or lose their power of flight over evolutionary time and so become isolated (and vulnerable to terrestrial predators such as rats). The population of this species in American Samoa is therefore distinct based on geographic and distributional isolation from spotless crake populations on other islands in the oceanic Pacific, the Philippines, and Australia. The American Samoa population of the spotless crake links the Central and Eastern Pacific portions of the species' range. The loss of this population could cause an increase of roughly 500 miles (805 kilometers) in the disjunction between the central and eastern Polynesian portions of the spotless crake's range, and could result in the isolation of the Marquesas and Society Islands populations by further limiting the potential for even rare genetic exchange. Based on the discreteness and significance of the American Samoa population of the spotless crake, we consider this population to be a distinct vertebrate population segment.

Threats to this population have not changed over the past year. The population in American Samoa is threatened by small population size, limited distribution, predation by nonnative mammals, continued development of wetland habitat, and natural catastrophes such as hurricanes. The co-occurrence of a known predator of ground-nesting birds, the Norway rat (*Rattus norvegicus*), along with the extremely restricted observed distribution and low numbers, indicate that the magnitude of the threats to the American Samoa DPS of the spotless crake continues to be high, because the threats significantly affect the species survival. The threats are ongoing, and therefore imminent. Based on this assessment of existing information about the imminence and high magnitude of these threats, we assigned the spotless crake an LPN of 3.

Yellow-billed cuckoo, western U.S. DPS (*Coccyzus americanus*) – The following summary is based on information contained in our files and the petition we received on February 9, 1998. See also our 12–month petition finding published on July 25, 2001 (66 FR 38611). We consider the yellow-billed cuckoos that occur in the western United States as a DPS. The area for this DPS is west of the crest of the Rocky Mountains. The yellow-billed cuckoo (*Coccyzus americanus*) is a medium-sized bird that breeds in large blocks of riparian habitats (particularly woodlands with cottonwoods (*Populus fremontii*) and willows (*Salix* sp.). Dense understory foliage appears to be an important factor in nest site selection, while cottonwood trees are an important foraging habitat in areas where the species has been studied in California.

The threats currently facing the yellow-billed cuckoo include habitat destruction and modification and pesticide application. Principal causes of riparian habitat losses are conversion to agricultural and other uses, dams and river flow management, stream channelization and stabilization, and livestock grazing. Available breeding habitats for cuckoos have also been substantially reduced in area and quality by groundwater pumping and the replacement of native riparian habitats by invasive nonnative plants, particularly tamarisk. Overuse by livestock has been a major factor in the degradation and modification of riparian habitats in the western United States. The effects include changes in plant community structure and species composition and in relative abundance of species and plant density. These changes are often linked to more widespread changes in watershed hydrology. Livestock grazing in riparian habitats typically results in reduction of plant species diversity and density, especially of palatable broadleaf plants like willows and cottonwood saplings, and is one of the most common causes of riparian degradation. In addition to destruction and degradation of riparian habitats, pesticides may affect cuckoo populations. In areas where riparian habitat borders agricultural lands, e.g., in California's central valley, pesticide use may indirectly affect cuckoos by reducing prey numbers, or by poisoning nestlings if sprayed directly in areas where the birds are nesting. We retained an LPN of 3 for this population of yellow-billed cuckoo; the threats are ongoing and therefore imminent, and they are of a high magnitude, because ongoing habitat degradation could affect the survival of the DPS rangewide.

Friendly ground-dove, American Samoa DPS (*Gallicolumba stairi stairi*) – The following summary is based on information contained in our files. No new information was provided in the petition we received on May 11, 2004. The genus *Gallicolumba* is distributed throughout the Pacific and Southeast Asia. The genus is represented in the oceanic Pacific by six species: Three are endemic to Micronesian islands or archipelagos, two are endemic to island groups in French Polynesia, and *G. stairi* is endemic to Samoa, Tonga, and Fiji. Some authors recognize two subspecies of the friendly ground-dove, one, slightly smaller, in the Samoan archipelago (*G. s. stairi*), and one in Tonga and Fiji (*G. s. vitiensis*), but because morphological differences between the two are minimal, we are not recognizing separate subspecies at this time.

In American Samoa, the friendly ground-dove has been found on the islands of Ofu and Olosega (Manua Group). Threats to this subspecies have not changed over the past year. Predation by nonnative species and natural catastrophes such as hurricanes are the primary threats to the subspecies. Of these, predation by nonnative species is thought to be occurring now and likely has been occurring for several decades. This predation may be an important impediment to increasing the population. Predation by introduced species has played a significant role in reducing, limiting, and extirpating populations of island birds, especially ground-nesters, in the Pacific and other locations worldwide. Nonnative predators known or thought to occur in the range of the friendly ground-dove in American Samoa are feral cats (*Felis catus*), Polynesian rats (*Rattus exulans*), black rats (*R. rattus*), and Norway rats (*R. norvegicus*).

In January 2004 and February of 2005, hurricanes virtually destroyed the habitat of *G. stairi* in an area on Olosega Island where the species had been most

frequently recorded. Although this species has coexisted with severe storms for millennia, this example illustrates the potential for natural disturbance to exacerbate the effect of anthropogenic disturbance on small populations. Consistent monitoring using a variety of methods over the last 5 years yielded few observations of this taxon in American Samoa. The total population size is poorly known, but is unlikely to number more than a few hundred pairs. The past five years or so of surveys have revealed no change in the relative abundance of this taxon in American Samoa. The distribution of the friendly ground-dove is limited to steep, forested slopes with an open understory and a substrate of fine scree or exposed earth; this habitat is not common in American Samoa. The threats are ongoing and, therefore imminent and the magnitude is moderate because the relative abundance has remained the same for several years. Thus, we assign this subspecies an LPN of 9.

Streaked horned lark (*Eremophila alpestris strigata*) – The following summary is based on information contained in our files. No new information was provided in the petition we received on December 11, 2002. The streaked horned lark occurs in Washington and Oregon, and is thought to be extirpated in British Columbia, Canada. The streaked horned lark nests on the ground in sparsely vegetated sites in short-grass dominated habitats, such as native prairies, coastal dunes, fallow agricultural fields, lightly- to moderately-grazed pastures, seasonal mudflats, airports, and dredged-material formed islands in the Columbia River. In Washington, surveys show that there are approximately 330 remaining breeding birds. In Oregon, the breeding population is estimated to be approximately 400 birds.

The streaked horned lark's breeding habitat continues to be threatened by loss and degradation due to conversion of native grasslands to other uses (such as agriculture, homes, recreational areas, and industry), encroachment of woody vegetation, and invasion of nonnative plant species (e.g., Scot's broom, sod-forming grasses, and beachgrasses). Native prairies have been nearly eliminated throughout the range of the species. Less than 1 to 3 percent of the native grassland and savanna are estimated to remain. Those that remain have been invaded by nonnative sod-forming grasses. Coastal nesting areas have suffered the same fate. A recent purchase of prairie lands in Washington has secured habitat that would have been developed, but its status as suitable lark nesting habitat is unknown.

Wintering habitats are seemingly few, and susceptible to unpredictable conversion to unsuitable over-wintering habitat. Where larks inhabit human-created habitats similar in structure to native prairies (such as airports, military reservations, agricultural fields, and dredge-formed islands), or where they occur adjacent to human habitation, they are subjected to a variety of unintentional human disturbances such as mowing, recreational and military activities, plowing, flooding, and dredge spoil dumping during the nesting season, as well as intentional disturbances such as at the McChord AFB where falcons and dogs are used to haze the birds in order to avoid aircraft collisions. In some areas, landowners have taken steps to improve streaked horned lark nesting habitat.

The magnitude of the threats is high due to small populations with low genetic diversity, and patchy and isolated habitats in areas desirable for development, many of which remain unsecured. The threat of invasive plant species is high and constant, aside from a few restoration sites. The numbers of individuals are low and the numbers of populations are few. Over-wintering birds are concentrated in larger flocks and subject to unpredictable wintering habitat loss (especially in the Willamette Valley, Oregon), potentially affecting a large portion of the population at one time. In Washington, known populations occur on airports and military bases (6 of 13 sites), coastal beaches (4 of 13 sites), and Columbia River islands (3 of 13 sites), where management, training activities, recreation, and dredge spoil dumping continue to negatively impact streaked horned lark breeding and wintering. In Oregon, breeding and wintering sites occur on Columbia River islands, in cultivated grass fields, grazed pastures, fallow fields, roadside shoulders, Christmas tree farms, and wetland mudflats. Such areas continue to be subject to negative impacts such as dredge spoil dumping, development, plowing, mowing, pesticide and herbicide applications, trampling, vehicle traffic, and recreation. Many of these Oregon sites are ephemeral in nature, with the quality of habitat changing from year to year from suitable to unsuitable. Thus the numbers of sites also changes year to year.

The threats are imminent, due to the continued loss of suitable lark habitat, risks to the wintering populations, plans for development on and adjacent to several of its nesting areas, predation, use of falcons and dogs to haze breeding birds at McChord AFB, planned and/or continued expansions of the McChord AFB West Ramp and Olympia Airport, and human disturbance, including annual Air Force military training and fire-bombing on top of lark nesting habitat. We continue to assign an LPN of 3 to this subspecies.

Red knot (*Calidris canutus rufa*) – See above in ''*Summary of Listing Priority Changes in Candidates*.'' The above summary is based on information contained in our files and information provided by petitioners. Four petitions to emergency list the red knot have been received: one on August 9, 2004, two others on August 5, 2005, and the most recent on February 27, 2008.

Kittlitz's murrelet (*Brachyramphus brevirostris*) – The following summary is based on information contained in our files and the petition we received on May 9, 2001. Kittlitz's murrelet is a small diving seabird whose entire North American population, and most of the world's population, inhabits Alaskan coastal waters discontinuously from Point Lay south to northern portions of Southeast Alaska. Kittlitz's murrelets are associated with tidewater glaciers. The current population estimate for Kittlitz's murrelets in Alaska is approximately 16,700 birds, a decline of 74 to 84 percent during the past 10 to 20 years. New survey information supports and strengthens the negative population trend estimates that have been previously reported.

Threats to Kittlitz's murrelets include large-scale processes such as global climate change and marine climate regime shift. These large-scale processes may influence Kittlitz's murrelet survival and reproduction. Glacial retreat, a global phenomenon that affects many of the glaciers with which Kittlitz's murrelets are associated, is associated with changing forage fish availability and may result in increased predation. Other ongoing threats include oil spills, bycatch in commercial gillnet fisheries, and disturbance by tour boats. Kittlitz's murrelets are believed to have been seriously affected by the *Exxon Valdez* oil spill in Prince William Sound in 1989. Catastrophic events such as oil spills could have a significant negative effect on the population of this already diminished species. Susceptibility to mortality as bycatch in commercial fishing could be a significant factor in their population decline; Kittlitz's murrelets are caught in gill nets in numbers disproportionate to their density. Tour boat visitation to glacial fjords is a growing industry, and this activity may increasingly disrupt Kittlitz's murrelet feeding behavior; tour

boats may provide artificial perch sites for avian predators.

Based on the observed population trajectory and the severity of present threats (rapid glacial retreat, acute and chronic oil spills, commercial gillnet fishing, and human disturbance from tour boats), the threats to this species are high in magnitude and imminent. Therefore, we assigned an LPN of 2 to this species.

Xantus's murrelet (*Synthliboramphus hypoleucus*) – The following summary is based on information contained in our files and the petition we received on April 16, 2002. The Xantus's murrelet is a small seabird in the Alcid family that occurs along the west coast of North America in the United States and Mexico. The species has a limited breeding distribution, only nesting on the Channel Islands in southern California and on islands off the west coast of Baja California, Mexico. Although data on population trends are scarce, the population is suspected to have declined greatly over the last century, mainly due to introduced predators such as rats (*Rattus* sp.) and feral cats (*Felis catus*) to nesting islands, with extirpations on three islands in Mexico. A dramatic decline (up to 70 percent) from 1977 to 1991 was detected at the largest nesting colony in southern California, possibly due to high levels of predation on eggs by the endemic deer mouse (*Peromyscus maniculatus elusus*). Identified threats include introduced predators at nesting colonies, oil spills and oil pollution, reduced prey availability, human disturbance, and impacts related to artificial light pollution.

Although substantial declines in the Xantus's murrelet population likely occurred over the last century, some of the largest threats are being addressed, and, to some degree, ameliorated. Declines and extirpations at several nesting colonies were thought to have been caused by nonnative predators, which have been removed from many of the islands where they once occurred. Most notably, since 1994, Island Conservation and Ecology Group has systematically removed rats, cats, and dogs from every murrelet nesting colony in Mexico, with the exception of cats and dogs on Guadalupe Island. In 2002, rats were eradicated from Anacapa Island in southern California, which has resulted in improvements in reproductive success at that island. In southern California, there are also plans to remove rats from San Miguel Island, and to restore nesting habitat on Santa Barbara Island through the Montrose Settlements Restoration Project, which may benefit the Xantus's murrelet population at those islands.

Artificial lighting from squid fishing and other vessels, or lights on islands, remains a potential threat to the species. Bright lights make Xantus's murrelets more susceptible to predation, and they can also become disoriented and exhausted from continual attraction to bright lights. Chicks can become disoriented and separated from their parents at sea, which could result in death of the dependent chicks. High-wattage lights on commercial market squid (*Loligo opalescens*) fishing vessels used at night to attract squid to the surface of the water in the Channel Islands was the suspected cause of unusually high predation on Xantus's murrelets by western gulls and barn owls at Santa Barbara Island in 1999. To address this threat, in 2000, the California Fish and Game Commission required light shields and a limit of 30,000 watts per boat; it is unknown if this is sufficient to reduce impacts. Squid fishing has not occurred at a particularly noticeable level near any of the colonies in the Channel Islands since 1999; however, this remains a potential future threat.

A proposal to build a liquid natural gas (LNG) facility 600 meters (1,969 feet) off the Coronados Islands in Baja California, Mexico, was considered a potential major threat to the species. This island contains one of the largest nesting populations of Xantus's murrelets in the world. Potential impacts of this facility to the nesting colony included bright lights at night from the facility and visiting tanker vessels, noise from the facility or from helicopters visiting the facility, and the threat of oil spills associated with visiting tanker vessels. However, Chevron announced in March 2007 that they have abandoned plans to develop this facility and withdrew their permits. There are three proposed LNG facilities in the Channel Islands; however, these are early in the complex and long-term planning processes, and it is possible that none of these facilities will be built. In addition, none of them are directly adjacent to nesting colonies, where their impacts would be expected to be more significant.

The LNG facility off the Coronados Islands was considered to be an imminent threat of high magnitude, which resulted in a previous LPN of 2. The remaining threats to the species are of high magnitude since they have the potential to result in mortality for a large portion of the species' range. However, the threats are nonimminent since they are not currently occurring at most of the murrelet nesting sites. Therefore, we retained an LPN of 5 for this species.

Lesser prairie-chicken (*Tympanuchus pallidicinctus*) - See above in ''*Summary of Listing Priority Changes in Candidates*.'' The above summary is based on information contained in our files and the petition received on October 5, 1995. Additional information can be found in the 12–month finding published on June 7, 1998 (63 FR 31400).

Greater sage-grouse, Columbia Basin DPS (*Centrocercus urophasianus*) – For the reasons discussed below, we have not updated our finding with regard to the Columbia Basin DPS of the western subspecies of the greater sage-grouse (*C. u. phaios*) in this notice. The following summary is based on information in our files and a petition, dated May 14, 1999, requesting the listing of the Washington population of western sage grouse. On May 7, 2001, we concluded that listing the Columbia Basin DPS of western sage grouse was warranted but precluded by higher priority listing actions (66 FR 22984); this DPS was historically found in northern Oregon and central Washington. The Service subsequently received two petitions requesting the listing of the entire ranges of what the petitions called the western and eastern subspecies of greater sage-grouse, dated January 24 and July 3, 2002, respectively. The petition involving the western sage-grouse requested listing the subspecies in northern California through Oregon and Washington (including the Columbia Basin DPS, for which we had already concluded listing was warranted but precluded), as well as any western sage-grouse still occurring in parts of Idaho.

In evaluating the two petitions, we communicated with recognized sage-grouse experts, and discovered there was disagreement as to the taxonomic validity of these subspecies of the greater sage-grouse. Due to this disagreement in the scientific community, the we evaluated the available information and concluded that the eastern and western subspecies designations for greater sage-grouse are inappropriate given current taxonomic standards, which also meant they were not listable entities under the Act. We also concluded that the eastern and western populations did not constitute DPSs of the greater sage-grouse. Therefore, we published findings that the petitions did not present substantial information indicating that what the petitions had identified as the western or eastern subspecies may be warranted for listing under the Act (68 FR 6500 and 69 FR 933, respectively). The Institute for Wildlife Protection filed a

court complaint, dated June 6, 2003, challenging the merits of our 90–day finding on the petition to list the western subspecies. On August 10, 2004, a U.S. District Court judge ruled in favor of the Service and dismissed the plaintiff's case. An appeal, dated November 24, 2004, was filed by the Institute for Wildlife Protection. On March 3, 2006, the 9th Circuit Court of Appeals remanded the 90–day finding to the Service on the grounds that we did not provide an adequate basis for concluding that the petition failed to present substantial information indicating the western sage-grouse may be a valid subspecies. The Court did, however, uphold our conclusion that the petitioned entity (western sage-grouse) does not constitute a DPS of the greater sage-grouse. On April 29, 2008, we published a substantial 90–day petition finding which concluded that the petition presented substantial information indicating that listing the western subspecies of the greater sage-grouse may be warranted, announced that we were initiating a status review, and requested relevant information from the public (73 FR 23170). We will publish an updated finding addressing the Columbia Basin DPS in the **Federal Register** after completing our status review and 12–month petition finding regarding the petition to list the western subspecies of the greater sage-grouse.

Band-rumped storm-petrel, Hawaii DPS (*Oceanodroma castro*) – The following summary is based on information contained in our files and the petition we received on May 8, 1989. No new information was provided in the second petition received on May 11, 2004. The band-rumped storm-petrel is a small seabird that is found in several areas of the subtropical Pacific and Atlantic Oceans. In the Pacific, there are three widely separated breeding populations – one in Japan, one in Hawaii, and one in the Galapagos. Populations in Japan and the Galapagos are comparatively large and number in the thousands, while the Hawaiian birds represent a small, remnant population of possibly only a few hundred pairs. Band-rumped storm-petrels are most commonly found in close proximity to breeding islands. The three populations in the Pacific are separated by long distances across the ocean where birds are not found. Extensive at-sea surveys of the Pacific have revealed a broad gap in distribution of the band-rumped storm-petrel to the east and west of the Hawaiian Islands, indicating the distribution of birds in the central Pacific around Hawaii is disjunct from other nesting areas. The available information indicates that distinct populations of band-rumped storm-petrels are definable and that the Hawaiian population is distinct based on geographic and distributional isolation from other band-rumped storm-petrel populations in Japan, the Galapagos, and the Atlantic Ocean. A population also can be considered discrete if it is delimited by international boundaries across which exist differences in management control of the species. The Hawaiian population of the band-rumped storm-petrel is the only populationwithin U.S. borders or under U.S. jurisdiction. Loss of the Hawaiian population would cause a significant gap in the distribution of the band-rumped storm-petrel in the Pacific, and could result in the complete isolation of the Galapagos and Japan populations without even occasional genetic exchanges. Therefore, the population is both discrete and significant, and is therefore a DPS.

The band-rumped storm-petrel probably was common on all of the main Hawaiian Islands when Polynesians arrived about 1,500 years ago, based on storm-petrel bones found in middens on the island of Hawaii and in excavation sites on Oahu and Molokai. Nesting colonies of this species in the Hawaiian Islands currently are restricted to remote cliffs on Kauai and Lehua Island and high-elevation lava fields on Hawaii. Vocalizations of the species were heard in Haleakala Crater on Maui as recently as 2006; however, no nesting sites have been located on the island to date. The significant reduction in numbers and range of the band-rumped storm-petrel is due primarily to predation by nonnative predators introduced by humans, including the domestic cat (*Felis catus*), small Indian mongoose (*Herpestes auropunctatus*), common barn owl (*Tyto alba*), black rat (*R. rattus*), Polynesian rat (*Rattus exulans*), and Norway rat (*R. norvegicus*), which occur throughout the main Hawaiian Islands, with the exception of the mongoose, which is not established on Kauai. Attraction of fledglings to artificial lights, which disrupts their night-time navigation, resulting in collisions with building and other objects, and collisions with artificial structures such as communication towers and utility lines are also threats. Erosion of nest sites caused by the actions of nonnative ungulates is a potential threat in some locations. Efforts are underway in some areas to reduce light pollution and mitigate the threat of collisions, but there are no large-scale efforts to control nonnative predators in the Hawaiian Islands. The threats are imminent because they are ongoing, and they are of a high magnitude because they can significantly affect the survival of this DPS. Therefore, we assign this distinct population segment an LPN of 3.

Elfin-woods warbler (*Dendroica angelae*) – The following summary is based on information contained in our files. No new information was provided in the petition we received on May 11, 2004. The elfin woods warbler, is a small entirely black and white warbler, and was at first thought to occur only in the high elevation dwarf or elfin forests of Puerto Rico, but it has since been found at lower elevations including shade coffee plantations and secondary forests. The elfin woods warbler has been documented from four locations in Puerto Rico: Luquillo Mountains, Sierra de Cayey, and the Commonwealth forests of Maricao and Toro Negro. However, it has not been recorded again in Toro Negro or Cayey, since Hurricane Hugo in 1989. In 2003 and 2004, surveys for the elfin-woods warbler in the Carite Commonwealth Forest, Toro Negro Forest, Guilarte Forest, Bosque del Pueblo, Maricao Forest and the Caribbean National Forest, only detected the species in the latter two areas. In the Maricao Commonwealth Forest, 778 elfin woods warblers were recorded, and in the Caribbean National Forest, 196 elfin-woods warblers were recorded.

Habitat destruction from expansion of public facilities within the forests, potential construction of additional telecommunication towers and their maintenance, disruption of breeding activities from pedestrians and high human use areas, switching from shade to sun coffee plantations, timber management practices, potential predators, and catastrophic natural events such as hurricanes and forest fires, threaten this species. Although these threats are not imminent because most of the range of the elfins wood warbler is within protected lands, the magnitude of threat to this species is high, because the restricted distribution and low population numbers cause the threats to have a significant impact on the species' survival. Therefore, we assign a listing priority number of 5 to this species.

Reptiles

Sand dune lizard (*Sceloporus arenicolus*) – We have not updated our assessment for this species, as we are currently developing a proposed listing rule.

Eastern massasauga rattlesnake (*Sistrurus catenatus catenatus*) – The following summary is based on information contained in our files. No new information was provided in the petition received on May 11, 2004. The eastern massasauga is one of three recognized subspecies of massasauga, a rattlesnake. It occupies shallow wetlands and adjacent upland habitat in portions of Illinois, Indiana, Iowa, Michigan, Minnesota, Missouri, New York, Ohio, Pennsylvania, Wisconsin, and Ontario.

Although the current range of the eastern massasauga resembles the subspecies' historical range, the geographic distribution has been restricted by the loss of the subspecies from much of the area within the boundaries of that range. Approximately 40 percent of the counties that were historically occupied by the eastern massasauga no longer support the subspecies. This subspecies is currently considered imperiled in every State and province which it occupies. Each State and Canadian province across the range of the eastern massasauga has lost more than 30 percent, and for the majority more than 50 percent, of their historical populations. Furthermore, fewer than 35 percent of the remaining populations are considered secure. Approximately 59 percent of the remaining eastern massasauga populations occur wholly or in part on public land, and Statewide and/or site-specific Candidate Conservation Agreements with Assurances (CCAAs) are currently being developed for many of these areas in Iowa, Illinois, Michigan, and Wisconsin. In 2004, a Candidate Conservation Agreement (CCA) with the Lake County Forest Preserve District in Illinois was completed. In 2005, a CCA with the Forest Preserve District of Cook County in Illinois was completed. In 2006, a CCAA with the Ohio Department of Natural Resources Division of Natural Areas and Preserves was completed for Rome State Nature Preserve in Ashtabula County. Populations expected to be under CCAs and CCAAs have a high likelihood of persisting and remaining viable. Other populations are likely to suffer additional losses in abundance and genetic diversity and some will likely be extirpated unless threats are removed in the near future. The primary threats to the eastern massasauga are habitat modification, habitat succession, incompatible land management practices, illegal collection for the pet trade, and human persecution. Because of the ongoing effort to protect the subspecies through CCAAs, the threats are moderate overall. Although the CCAAs have decreased the immediacy of some threats in some areas, the majority of the threats are ongoing or are in areas not covered by a CCAA. As a result, overall these threats remain an imminent threat to many remaining populations, particularly those inhabiting private lands. We have kept the LPN at 9 for this subspecies.

Black pine snake (*Pituophis melanoleucus lodingi*) – The following summary is based on information contained in our files. No new information was provided in the petition we received on May 11, 2004. There are historical records for the black pine snake from one parish in Louisiana, 14 counties in Mississippi, and 3 counties in Alabama west of the Mobile River Delta. Black pine snake surveys and trapping indicate that this species has been extirpated from Louisiana and from four counties in Mississippi. Moreover, the distribution of remaining populations has become highly restricted due to the destruction and fragmentation of the remaining longleaf pine habitat within the range of the subspecies. Most of the known Mississippi populations are concentrated on the DeSoto National Forest. Populations occurring on properties managed by State and other governmental agencies as gopher tortoise mitigation banks or wildlife sanctuaries represent the best opportunities for long-term survival of the subspecies in Alabama. Other factors affecting the black pine snake include vehicular mortality and low reproductive rates, which magnify the threats from destruction and fragmentation of longleaf pine habitat and increase the likelihood of local extinctions. Due to the imminent threats of high magnitude caused by the past destruction of most of the longleaf pine habitat of the black pine snake, and the continuing persistent degradation of what remains, we assigned an LPN of 3 to this subspecies.

Louisiana pine snake (*Pituophis ruthveni*) –The following summary is based on information contained in our files and the petition we received on July 19, 2000. The Louisiana pine snake historically occurred in the fire-maintained longleaf pine ecosystem within west-central Louisiana and extreme east-central Texas. Most of the historical longleaf pine habitat of the Louisiana pine snake has been destroyed or degraded due to logging, fire suppression, roadways, short-rotation silviculture, and grazing. In the absence of recurrent fire, suitable habitat conditions for the Louisiana pine snake and its primary prey, the Baird's pocket gopher (*Geomys breviceps*), are lost due to vegetative succession. The loss and fragmentation of the longleaf pine ecosystem has resulted in extant Louisiana pine snake populations that are isolated and small. Trapping and occurrence data indicate the Louisiana pine snake is currently restricted to seven disjunct populations; five of the populations occur on Federal lands and two occur mainly on private industrial timberlands. Current potentially occupied habitat in Louisiana and Texas is estimated to be approximately 163,000 acres, with 53 percent occurring on public lands and 47 percent in private ownership.

All remnant Louisiana pine snake populations have been affected by habitat loss and all require active habitat management. A Candidate Conservation Agreement (CCA) was completed in 2003 to maintain and enhance potentially occupied habitat on public lands, and to protect known Louisiana pine snake populations. On Federal lands, signatories of the Louisiana pine snake CCA currently conduct habitat management (i.e., prescribed burning and thinning) that is beneficial to the Louisiana pine snake. This proactive habitat management has likely slowed or reversed the rate of Louisiana pine snake habitat degradation on many portions of Federal lands. The largest extant Louisiana pine snake population exists on private industrial timberlands. Although two conservation areas are managed to benefit Louisiana pine snakes on this property, the majority of the intervening occupied habitat is threatened by land management activities (habitat conversion to short-rotation pine plantations) that decrease habitat quality.

Three of the remnant Louisiana pine snake populations may be vulnerable to decreased demographic viability or other factors associated with low population sizes and demographic isolation. Although these remnant Louisiana pine snake populations are intrinsically vulnerable and thus threatened by these factors, it is not known if they are presently actually facing these threats. Because all extant populations are currently isolated and fragmented by habitat loss in the matrix between populations, there is little potential for dispersal among remnant populations or for the natural re-colonization of vacant habitat patches. Thus, the loss of any remnant population is likely to be permanent. Other factors affecting the Louisiana pine snake throughout its range include low fecundity, which magnifies other threats and increases the likelihood of local extinctions, and vehicular

mortality, which may significantly affect Louisiana pine snake populations.

While the extent of Louisiana pine snake habitat loss has been great in the past and much of the remaining habitat has been degraded, habitat loss does not represent an imminent threat, primarily because the rate of habitat loss appears to be declining on public lands. However, all populations require active habitat management, and the lack of adequate habitat remains a threat for several populations. The potential threats to a large percentage of extant Louisiana pine snake populations, coupled with the likely permanence of these effects and the species' low fecundity and low population sizes (based on capture rates and occurrence data), lead us to conclude that the threats have significant effect on the survival of the species and therefore remain high in magnitude. Thus, based on nonimminent, high-magnitude threats, we assign a listing priority number of 5 to this species.

Sonoyta mud turtle (*Kinosternon sonoriense longifemorale*) - The following summary is based on information contained in our files. No new information was provided in the petition we received on May 11, 2004. The Sonoyta mud turtle occurs in a spring and pond at Quitobaquito Springs on Organ Pipe Cactus National Monument in Arizona, and in the Rio Sonoyta and Quitovac Spring of Sonora, Mexico. Loss and degradation of stream habitat from water diversion and groundwater pumping, along with its very limited distribution, is the primary threat to the Sonoyta mud turtle. Sonoyta mud turtles are highly aquatic and depend on permanent water for survival. The area of southwest Arizona and northern Sonora where the Sonoyta mud turtle occurs is one of the driest regions of the southwest. Due to continuing drought, irrigated agriculture, and development in the region, surface water in the Rio Sonoyta can be expected to dwindle further and therefore have a significant impact on the survival of this subspecies which may also be vulnerable to aerial spraying of pesticides on nearby agricultural fields. We retained an LPN of 3 for this subspecies because threats are of a high magnitude and continue to date, and therefore, are imminent.

Amphibians

Columbia spotted frog, Great Basin DPS (*Rana luteiventris*) – The following summary is based on information contained in our files and the petition we received on May 1, 1989. Currently, Columbia spotted frogs appear to be widely distributed throughout southwestern Idaho, eastern Oregon, northeastern and central Nevada but local populations within this general area appear to be small and isolated from each other. Recent work by researchers in Idaho and Nevada has documented the loss of historically known sites, reduced numbers of individuals within local populations, and declines in the reproduction of those individuals. Small, highly fragmented populations, characteristic of the majority of existing populations of Columbia spotted frogs in the Great Basin, are highly susceptible to extinction processes. The populations within the Columbia Basin are discrete and significant, and thus are a DPS.

Water development, improper grazing, mining activities and nonnative species have and continue to contribute to the degradation and fragmentation of Columbia spotted frog habitat. Emerging fungal diseases such as chytridiomycosis and the spread of parasites are contributing factors to Columbia spotted frog population declines throughout portions of its range. A 10–year Conservation Agreement/Strategy was signed in September 2003 for both the Northeast and the Toiyabe subpopulations in Nevada. The goals of the Conservation Agreements are to reduce threats to Columbia spotted frogs and their habitat to the extent necessary to prevent populations from becoming extirpated throughout all or a portion of their historic range and to maintain, enhance, and restore a sufficient number of populations of Columbia spotted frogs and their habitat to ensure their continued existence throughout their historic range. Additionally, a Candidate Conservation Agreement with Assurances was completed in 2006 for the Owyhee subpopulation at Sam Noble Springs, Idaho. While some threats (habitat modification and fragmentation, nonnative species, inadequate regulatory mechanisms, and climate change) to the species and its habitat occur rangewide but at various intensities, other threats (disease and mining) only impact local populations; overall, the magnitude of the threats is moderate. Based on ongoing, and therefore, imminent threats of moderate magnitude, we assigned a listing priority number of 9 to this Distinct Population Segment of the Columbia spotted frog.

Mountain yellow-legged frog, Sierra Nevada DPS (*Rana muscosa*) - The following summary is based on information contained in our files and the petition received on February 8, 2000. Also see our 12–month petition finding published on January 16, 2003 (68 FR 2283) and our amended 12–month petition finding published on June 25, 2007 (72 FR 34657). The mountain yellow-legged frog inhabits the high elevation lakes, ponds, and streams in the Sierra Nevada Mountains of California, from near 4,500 feet (ft) (1,370 meters (m)) to 12,000 ft (3,650 m). The distribution of the mountain yellow-legged frog is from Butte and Plumas Counties in the north to Tulare and Inyo Counties in the south. The population in the Sierra Nevada is discrete and significant and is therefore a DPS. A separate population in southern California is already listed as endangered (67 FR 44382).

Predation by introduced trout is the best-documented cause of the decline of the Sierra Nevada mountain yellow-legged frog, because it has been repeatedly observed that nonnative fishes and mountain yellow-legged frogs rarely co-exist. Mountain yellow-legged frogs and trout (native and nonnative) do co-occur at some sites, but these co-occurrences probably are mountain yellow-legged frog populations with negative population growth rates in the absence of immigration. To help reverse the decline of the mountain yellow-legged frog, the Sequoia and Kings Canyon National Parks have been removing introduced trout since 2001. Over 18,000 introduced trout have been removed from 11 lakes since the project started in 2001. The lakes are completely- to mostly fish-free and substantial mountain yellow-legged frog population increases have resulted. The California Department of Fish and Game (CDFG) has also removed or is in the process of removing nonnative trout from a total of between 10 and 20 water bodies in the Inyo, Humboldt-Toiyabe, Sierra, and El Dorado National Forests. In the El Dorado National Forest golden trout were removed from Leland Lakes, and attempts have been made to remove trout from two sites near Gertrude Lake and a tributary of Cole Creek; no data showing increase in mountain yellow-legged frogs at these sites was available.

In California, chytridiomycosis, more commonly known as chytrid fungus, has been detected in many amphibian species, including the mountain yellow-legged frog within the Sierra Nevada. Recent research has shown that this pathogenic fungus is widely distributed throughout the Sierra Nevada, and that infected mountain yellow-legged frogs die soon after metamorphosis. Several infected and uninfected populations were monitored in Sequoia and Kings Canyon National Parks over multiple years, documenting dramatic declines and extirpations in infected but not in uninfected populations. In the summer

of 2005, 39 of 43 populations assayed in Yosemite National Park were positive for chytrid fungus.

The current distribution of the Sierra Nevada mountain yellow-legged frog is restricted primarily to publicly managed lands at high elevations, including streams, lakes, ponds, and meadow wetlands located on national forests, including wilderness and non-wilderness on the forests, and national parks. In several areas where detailed studies of the effects of chytrid fungus on the mountain yellow-legged frog are ongoing, substantial declines have been observed over the past several years. For example, in 2007 surveys in Yosemite National Park, mountain yellow-legged frogs were not detectable at 37 percent of 285 sites where they had been observed in 2000-2002; in 2005 in Sequoia and Kings Canyon National Parks, mountain yellow-legged frogs were not detected at 54 percent of sites where they had been recorded 3-8 years earlier. A compounding effect of disease-caused extinctions of mountain yellow-legged frogs is that recolonization may never occur, because streams connecting extirpated sites to extant populations now contain introduced fishes, which act as barriers to frog movement within metapopulations. The most recent assessment of the species status in the Sierra Nevada indicates that mountain-yellow legged frogs occur at less than 8 percent of the sites from which they were historically observed. A group of prominent scientists further suggest a 10 percent decline per year in the number of remaining *Rana mucosa* populations. Based on threats that are imminent (because they are ongoing) and high-magnitude (because they affect the survival of the DPS rangewide), we continue to assign the population of mountain yellow-legged frog in the Sierra Nevada an LPN of 3.

Oregon spotted frog (*Rana pretiosa*) - The following summary is based on information contained in our files and the petition we received on May 4, 1989. Historically, the Oregon spotted frog ranged from British Columbia to the Pit River drainage in northeastern California. Based on surveys of historical sites, the Oregon spotted frog is now absent from at least 76 percent of its former range. The majority of the remaining Oregon spotted frog populations are small and isolated.

The threats to the species' habitat include development, livestock grazing, introduction of nonnative plant species, vegetation succession, changes in hydrology due to construction of dams and alterations to seasonal flooding, lack of management of exotic vegetation predators, and poor water quality. Additional threats to the species are predation by nonnative fish and introduced bullfrogs; competition with bullfrogs for habitat; and diseases, such as oomycete water mold *Saprolegnia* and chytrid fungus infections. The magnitude of threat is high for this species because this wide range of threats to both individuals and their habitats could seriously reduce or eliminate any of these isolated populations and further reduce the species' range and potential survival. Habitat restoration and management actions have not prevented a decline in the reproductive rates in some populations. The threats are imminent because each population is faced with multiple ongoing and potential threats as identified above. Therefore, we retain an LPN of 2 for the Oregon spotted frog.

Relict leopard frog (*Rana onca*) – The following summary is based on information contained in our files and the petition we received on May 9, 2002. Relict leopard frogs are currently known to occur only in two general areas in Nevada: near the Overton Arm area of Lake Mead, and Black Canyon below Lake Mead. These two areas comprise a small fraction of the historical distribution of the species, which included springs, streams, and wetlands within the Virgin River drainage downstream from the vicinity of Hurricane, Utah; along the Muddy River, Nevada; and along the Colorado River from its confluence with the Virgin River downstream to Black Canyon below Lake Mead, Nevada and Arizona. Suggested factors contributing to the decline of the species include alteration of aquatic habitat due to agriculture and water development, including regulation of the Colorado River, and the introduction of exotic aquatic species which potentially prey on the relict leopard frog and may compete for food and cover sites. In 2005, the National Park Service, in cooperation with the Service and various other Federal, State, and local partners, developed a conservation agreement and strategy which is intended to improve the status of the species through prescribed management actions and protection. Conservation actions identified for implementation in the agreement and strategy include captive rearing tadpoles for translocation and refugium populations, habitat and natural history studies, habitat enhancement, population and habitat monitoring, and translocation. Conservation efforts are proceeding under the agreement, but, additional time is needed to determine whether the agreement will be effective in eliminating or reducing the threats to the point that the relict leopard frog can be removed from candidate status. However, because of these conservation efforts the magnitude of existing threats has been reduced to low to moderate. Most populations of the relict leopard frog face one or more threats which may be long-term in timing and duration. However, no populations are currently threatened by disease or any proposed human activity that would reduce the numbers and distribution of any given population. Since the threats are not currently occurring, they are nonimminent. We assigned an LPN of 11 to this species.

Ozark hellbender (*Cryptobranchus alleganiensis bishopi*) – We have not updated our assessment for this species, as we are currently developing a proposed listing rule.

Austin blind salamander (*Eurycea waterlooensis*) – Austin blind salamander (*Eurycea waterlooensis*) – The following summary is based on information contained in our files. No new information was provided in the petition received on May 11, 2004. The Austin blind salamander is known to occur in and around three of the four spring sites that comprise the Barton Springs complex in the City of Austin, Travis County, Texas. Primary threats to this species are degradation of water quality due to expanding urbanization. The Austin blind salamander depends on a constant supply of clean water in the Edwards Aquifer discharging from Barton Springs for its survival. Urbanization dramatically alters the normal hydrologic regime and water quality of an area. Increased impervious cover caused by development increases the quantity and velocity of runoff that leads to erosion and greater pollution transport. Pollutants and contaminants that enter the Edwards Aquifer are discharged in salamander habitat at Barton Springs and have serious morphological and physiological effects to the salamander.

The Texas Commission on Environmental Quality adopted the Edwards Rules in 1995 and 1997, which require a number of water quality protection measures for new development occurring in the recharge and contributing zones of the Edwards Aquifer. However, Chapter 245 of the Texas Local Government Code permits ''grandfathering'' of state regulations. Grandfathering allows developments to be exempted from any new local or state requirements for water quality controls and impervious cover limits if the developments were planned prior to the implementation of such regulations. As

a result of the grandfathering law, very few developments have followed these ordinances. New developments are still obligated to comply with regulations that were applicable at the time when project applications for development were first filed. In addition, it is significant that even if they were followed with every new development, these ordinances do not span the entire watershed for Barton Springs. Consequently, development occurring outside these jurisdictions can have negative consequences on water quality and thus have an impact on the species.

Water quality impacts threaten the continued existence of the Austin blind salamander by altering physical aquatic habitats and the food sources of the salamander. We consider the threats to be imminent because urbanization is ongoing and continues to expand over the Barton Springs Segment of the Edwards Aquifer and water quality continues to degrade. While the City of Austin and many other partners are actively working on conservation of the Barton Springs salamander, and the Austin blind salamander could benefit from all of the ongoing conservation actions that are being conducted for the Barton Springs salamander, these efforts have not yet been successful in improving water quality. In addition, the existence of the species continues to be threatened by hazardous chemical spills within the Barton Springs Segment of the Edwards Aquifer, which could result in direct mortality. Because the Austin blind salamander is known from only three clustered spring sites and must rely on clear, clean spring discharges from the Edwards Aquifer for its survival, degraded water quality poses a threat to the entire population, and is therefore a high–magnitude threat. Thus, we retain an LPN of 2 for this species.

Georgetown salamander (*Eurycea naufragia*) – See above in ''*Summary of Listing Priority Changes in Candidates*.'' The above summary is based on information contained in our files. No new information was provided in the petition we received on May 11, 2004.

Salado salamander (*Eurycea chisholmensis*) – The following summary is based on information contained in our files. No new information was provided in the petition we received on May 11, 2004. The Salado salamander is historically known from two spring sites, Big Boiling Springs and Robertson Springs, near Salado, Bell County, Texas. We have received only one anecdotal report of a salamander sighting in Big Boiling Springs in 2008; prior to that, the salamander had not been sighted there since 1991. Robertson Springs are on private land and access to the site has not been granted. The last survey at Robertson Springs was in the early 1990s.

Primary threats to this species are habitat modification and degradation of water quality due to expanding urbanization. The Salado salamander depends on a constant supply of clean water from the Northern Segment of the Edwards Aquifer for its survival. Pollutants and contaminants that enter the Edwards Aquifer discharge in salamander habitat and have morphological and physiological effects on the salamander. We do not know how likely spills are to occur within the contributing watersheds of the springs that support this species. However, several groundwater contamination incidents have occurred within Salado salamander habitat in recent years. The salamander is reasonably expected to be vulnerable to catastrophic hazardous materials spills, groundwater contamination from the Northern Segment of the Edwards Aquifer, and impacts to its surface habitat. In addition, because Big Boiling Springs is located near Interstate 35 and in the center of the city, increasing traffic and urbanization is likely to increase rather than decrease the threats of contamination from spills, higher levels of impervious cover, and subsequent impacts to groundwater. These threats significantly affect the survival of this species, and groundwater contamination and impact to surface habitat are ongoing. Moreover, we do not have information that the magnitude or imminence of the threats to the species has changed since our previous assessment when we concluded there are ongoing, and therefore, imminent threats of a high magnitude. Therefore we continue to assign an LPN of 2 to this species.

Yosemite toad (*Bufo canorus*) – The following summary is based on information contained in our files and the petition we received on April 3, 2000. See also our 12–month petition finding published on December 10, 2002 (67 FR 75834). Yosemite toads are most likely to be found in areas with thick meadow vegetation or patches of low willows near or in water, and use rodent burrows for overwintering and temporary refuge during the summer. Breeding habitat includes the edges of wet meadows, slow flowing streams, shallow ponds and shallow areas of lakes. The historic range of Yosemite toads in the Sierra Nevada occurs from the Blue Lakes region north of Ebbetts Pass (Alpine County) to south of Kaiser Pass in the Evolution Lake/Darwin Canyon area (Fresno County). The historic elevational range of Yosemite toads is 1,460 to 3,630 m (4,790 to 11,910 ft).

The threats currently facing the Yosemite toad include cattle grazing, timber harvesting, recreation, disease, and climate change. Inappropriate grazing has shown to cause loss in vegetative cover and destruction of peat layers in meadows, which lowers the groundwater table and summer flows. This may increase the stranding and mortality of tadpoles, or make these areas completely unsuitable for Yosemite toads (Martin 2002). Grazing can also degrade or destroy moist upland areas the Yosemite toad use as non-breeding habitat and it can collapse rodent burrows the Yosemite toads use as cover and hibernation sites. Timber harvesting and associated road development could severely alter the terrestrial environment and result in the reduction and occasional extirpation of amphibian populations in the Sierra Nevada. These habitat gaps may act as dispersal barriers and contribute to the fragmentation of Yosemite toad habitat and populations. Trails (foot, horse, bicycle, or off-highway motor vehicle) compact soil in riparian habitat, which increases erosion, displaces vegetation, and can lower the water table. Trampling or the collapsing of rodent burrows by recreationists, pets, and vehicles could lead to direct mortality of all life stages of the Yosemite toad and disrupt their behavior. Various diseases have been confirmed in Yosemite toads. Mass die-offs of amphibians have been attributed to: chytrid fungal infections of metamorphs and adults; *Saprolegnia* fungal infections of eggs; iridovirus infection of larvae, metamorphs, or adults; and bacterial infections. However, recent surveys in Yosemite National Park have found that the park populations are not currently infected with chytrid fungus. Yosemite toads probably are exposed to a variety of pesticides and other chemicals throughout their range. Environmental contaminants could negatively affect the species by causing direct mortality; suppressing the immune system; disrupting breeding behavior, fertilization, growth or development of young; and disrupting the ability to avoid predation. There is no indication that any of these threats in ongoing or planned and the threats are therefore nonimminent. In addition, since there are a number of substantial populations and these threats tend to have localized effects, the threats are moderate to low in magnitude. We therefore retained an LPN of 11 for the Yosemite toad.

Black Warrior waterdog (*Necturus alabamensis*) – The following summary is based on information contained in our files. No new information was provided in the petition we received on May 11, 2004. The Black Warrior waterdog is a salamander that inhabits streams above the Fall Line within the Black Warrior River Basin in Alabama. There is very little specific locality information available on the historical distribution of the Black Warrior waterdog since little attention was given to this species between its description in 1937 and the 1980s. At that time, there were a total of only 11 known historical records from 4 Alabama counties. Two of these sites have now been inundated by impoundments. Extensive survey work was conducted in the 1990s to look for additional populations. Currently, the species is known from 14 sites in 5 counties.

Water-quality degradation is the biggest threat to the continued existence of the Black Warrior waterdog. Most streams that have been surveyed for the waterdog showed evidence of pollution and many appeared biologically depauperate. Sources of point and nonpoint pollution in the Black Warrior River Basin have been numerous and widespread. Pollution is generated from inadequately treated effluent from industrial plants, sanitary landfills, sewage treatment plants, poultry operations, and cattle feedlots. Surface mining represents another threat to the biological integrity of waterdog habitat. Runoff from old, abandoned coal mines generates pollution through acidification, increased mineralization, and sediment loading. The North River, Locust Fork, and Mulberry Fork, all streams that this species inhabits, are on the Environmental Protection Agency's list of impaired waters. An additional threat to the Black Warrior waterdog is the creation of large impoundments that have flooded thousands of square hectares (acres) of its habitat. These impoundments are likely marginal or unsuitable habitat for the salamander. While the water-quality threat is pervasive and problematic, the overall magnitude of the threat is moderate, as there has not been a steep rate of decline in the population of this species. Water quality degradation in the Black Warrior basin is ongoing; therefore, the threats are imminent. We assigned an LPN of 8 to this species.

Fishes

Headwater chub (*Gila nigra*) – See above in ''*Summary of Listing Priority Changes in Candidates*.'' The above summary is based on information contained in our files and the 12–month finding published in the **Federal Register** on May 3, 2006 (71 FR 26007).

Arkansas darter (*Etheostoma cragini*) – The following summary is based on information contained in our files. No new information was provided in the petition we received on May 11, 2004. The Arkansas darter is a small fish in the perch family native to portions of the Arkansas River basin. The species' range includes sites in extreme northwestern Arkansas, southwestern Missouri, and northeastern Oklahoma, within the Neosho River watershed. It also occurs in a number of watersheds and isolated streams in eastern Colorado, south-central and southwestern Kansas, and the Cimarron watershed in northwest Oklahoma. The species is most often found in small spring-fed streams with sand substrate and aquatic vegetation. It appears stable at most sites where spring flows persist. It has declined in areas where spring flows have decreased or been eliminated. We estimate that currently there are approximately 135 locality occurrences of the Arkansas darter distributed across the 5 States; it was found at 29 of 67 sites sampled in 2005-2006. Threats to the species include stream dewatering resulting from groundwater pumping in the western portion of the species' range, and potential development pressures in portions of its eastern range. Spills and runoff from confined animal feeding operations also potentially affect the species range-wide. The magnitude of threats facing this species is moderate to low, given the number of different locations where the species occurs and the fact that no single threat or combination of threats is working to affect more than a portion of the wide-spread population occurrences. Overall, the threats are not imminent since groundwater pumping is declining and development, spills, runoff are not currently affecting the species rangewide. Thus, we are retaining an LPN of 11 for the Arkansas darter.

Cumberland darter (*Etheostoma susanae*) – We have not updated our assessment for this species, as we are currently developing a proposed listing rule.

Pearl darter (*Percina aurora*) – The following summary is based on information contained in our files. No new information was provided in the petition we received on May 11, 2004. Little is known about the specific habitat requirements or natural history of the Pearl darter. Pearl darters have been collected from a variety of river/stream attributes, mainly over gravel bottom substrate. This species is historically known only from localized sites within the Pascagoula and Pearl River drainages in two states (Louisiana and Mississippi). Currently, the Pearl darter is considered extirpated from the Pearl River drainage and rare in the Pascagoula River drainage. Since 1983, the range of the Pearl darter has decreased by 55 percent.

Pearl darters are vulnerable to the cumulative impacts of a variety of non-point pollution sources, such as sedimentation and chemicals, and to more localized and concentrated pollution events. The potential of reduction of the flow rate for the Leaf and Pascagoula rivers may be significant if the Department of Energy's Strategic Petroleum Reserve project occurs by 2014. However, the only current threat to the species is believed to be the steady yet gradual change in river and tributary geomorphology and hydrology over time. The magnitude of this threat to Pearl darter is high because even a gradual change in hydrology can have a significant impact on the survival of the species' limited and disjunct populations. The immediacy of the threat is nonimminent, since no known confirmed projects are planned that would have a direct impact on the species, and the decline of water quality is slow and gradual. In addition, efforts are underway to improve habitat by reducing these threats and to increase and augment the numbers of Pearl darters by husbandry. Therefore, we assign this species an LPN of 5.

Rush darter (*Etheostoma phytophilum*) – We have not updated our assessment for this species, as we are currently developing a proposed listing rule.

Yellowcheek darter (*Etheostoma moorei*) – The following summary is based on information from our files. No new information was provided in the petition we received on May 11, 2004. The yellowcheek darter is endemic to four headwater tributaries of the Little Red River in Arkansas. It is vulnerable to alterations in physical habitat characteristics such as the impoundment of Greers Ferry Reservoir, channel maintenance in the Archey Fork, increased sedimentation from eroding stream banks and poor riparian management, and illegal gravel mining. Factors affecting the remaining populations include loss of suitable breeding habitat, habitat and water quality degradation, population isolation due to stretches of unsuitable habitat between populations, and severe population declines exacerbated by stochastic drought conditions. A 2004-2005 threats assessment by Service personnel documented occurrences of the aforementioned activities

(impoundment, channel maintenance, poor riparian management, illegal gravel mining) and found 52 sites on the Middle Fork, 28 sites on the South Fork, 8 sites on Archey Fork, and 1 site in the Turkey/Beech/Devils Fork system where those activities are potentially contributing to the decline of the species. Since the threats assessment was completed, natural gas exploration and development in the Fayetteville Shale formation in north central Arkansas has also become a sizeable threat in all watersheds. The Middle Fork was listed as an impaired waterbody by the Arkansas Department of Environmental Quality in 2004 due to excessive bacteria and low dissolved oxygen.

Recent studies have documented significant declines in the numbers (60,000 in 1981; 10,300 in 2000) of this fish in the remaining populations and further range restriction within the tributaries (130.4 to 65.0 stream km). As a result, yellowcheek darter numbers declined over a 20–year period by 83 percent in both the Middle Fork and South Fork, and 60 percent in the Archey Fork, based on a 2000 status survey. No yellowcheek darters have been found in the Turkey Fork between 1999 and 2005; the species has apparently been extirpated in that reach. The threats are high in magnitude since they significantly affect the ability of this species to survive and they are not currently targeted by conservation actions. They are also imminent, because they are ongoing. Therefore, we assigned this species a listing priority number of 2.

Chucky madtom (*Noturus crypticus*) – We have not updated our assessment for this species, as we are currently developing a proposed listing rule.

Grotto sculpin (*Cottus* sp., sp. nov.) – The following summary is based on information contained in our files. No new information was provided in the petition we received on May 11, 2004. The Grotto sculpin, a small fish, is restricted to two karst areas (limestone regions characterized by sink holes, abrupt ridges, caves, and underground streams): the Central Perryville Karst and Mystery-Rimstone Karst in Perry County, southeast Missouri. Data supports the genetic distinctness of the grotto sculpin as a species, although it has not yet been formally described. Grotto sculpins have been documented in only 5 caves. The current overall range of the grotto sculpin has been estimated to encompass approximately 260 square kilometers (100 square miles).

The small population size and endemism of the grotto sculpin make it vulnerable to extinction due to genetic drift, inbreeding depression, and random or chance changes to the environment. The species' karst habitat is located down-gradient of the city of Perryville, Missouri, which poses a potential threat if contaminants from this urban area enter cave streams occupied by grotto sculpins. Various agricultural chemicals, such as ammonia, nitrite/nitrate, chloride, and potassium have been detected at levels high enough to be detrimental to aquatic life within the Perryville Karst area. More than half of the sinkholes in Perry County contain anthropogenic refuse, ranging from household cleansers and sewage to used pesticide and herbicide containers. As a result, potential water contamination from various sources of point and non-point pollution poses a significant threat to the grotto sculpin. Of the 5 cave systems documented to have grotto sculpins, populations in one cave system were likely eliminated, presumably as the result of point-source pollution. When the cave was searched in the spring of 2000, a mass mortality of grotto sculpin was noted, and subsequent visits to the cave have failed to document a single live grotto sculpin. Thus, the species appears to have suffered a 20 percent decrease in the number of populations from the single event. Predatory fish such as common carp, fat-head minnow, yellow bullhead, green sunfish, bluegill, and channel catfish occur in all of the caves occupied by grotto sculpin. These predators may escape surface farm ponds that unexpectedly drain through sinkholes into the underground cave systems and enter grotto sculpin habitat. Although we do not have direct observations of these fish preying on grotto sculpins, it is highly likely that predation is occurring. No regulatory mechanisms are in place that would provide protection to the grotto sculpin. Ongoing threats from chemical contamination of the habitat of the grotto sculpin and competition from nonnative fish, combined with its low population numbers, increase the likelihood of extinction. Due to the high magnitude of ongoing, and thus imminent, threats we assigned this species an LPN of 2.

Sharpnose shiner (*Notropis oxyrhynchus*) – The following summary is based on information contained in our files. No new information was provided in the petition we received on May 11, 2004. The sharpnose shiner is a small, slender minnow, endemic to the Brazos River Basin in Texas. Historically, the sharpnose shiner existed throughout the Brazos River and several of its major tributaries within the watershed. It has also been found in the Wichita River (within the Red River Basin) where it may have once naturally occurred but has since been extirpated. Current information indicates that the population within the Upper Brazos River drainage (upstream of Possum Kingdom Reservoir) is apparently stable, while the population within the Middle and Lower Brazos River Basins may only exist in remnant populations in areas of suitable habitat, which may no longer be viable, representing a reduction of approximately 68 percent of its historical range.

The most significant threat to the existence of the sharpnose shiner is potential reservoir development within its current range. Additional threats include irrigation and water diversion, sedimentation, desalination, industrial and municipal discharges, agricultural activities, in-stream sand and gravel mining, and the spread of invasive saltcedar. The current limited distribution of the sharpnose shiner within the Upper Brazos River Basin makes it vulnerable to catastrophic events such as the introduction of competitive species or prolonged drought. State law does not provide protection for the sharpnose shiner. The magnitude of threat is considered high, since the major threat of reservoir development within the current range of the species may render its remaining habitat unsuitable throughout its limited distribution. The immediacy of threat is nonimminent because the most significant threat – major reservoir projects – are not likely to occur in the near future, and there is potential for implementing other water supply options that could preclude reservoir development. For these reasons, we assigned an LPN of 5 to this species.

Smalleye shiner (*Notropis buccula*) – The following summary is based on information contained in our files. No new information was provided in the petition we received on May 11, 2004. The smalleye shiner is a small, pallid minnow endemic to the Brazos River Basin in Texas. The population of smalleye shiners within the Upper Brazos River drainage (upstream of Possum Kingdom Reservoir) is apparently stable. However, the shiner may be extirpated downstream from the reservoir, representing a reduction of approximately 54 percent of its historical range.

The most significant threat to the existence of the smalleye shiner is potential reservoir development within its current range. Additional threats include irrigation and water diversion, sedimentation, desalination, industrial

and municipal discharges, agricultural activities, in-stream sand and gravel mining, and the spread of invasive saltcedar. The current limited distribution of the smalleye shiner within the Upper Brazos River Basin makes it vulnerable to catastrophic events such as the introduction of competitive species or prolonged drought. State law does not provide protection for the smalleye shiner. The magnitude of threat is considered high since the major threat of reservoir development within the current range may render its remaining habitat unsuitable throughout its limited distribution. The immediacy of threat is nonimminent because the most significant threat – major reservoir projects – are not likely to occur in the near future, and there is potential for implementing other water supply options that could preclude reservoir development. For these reasons, we assigned an LPN of 5 to this species.

Zuni bluehead sucker (*Catostomus discobolus yarrowi*) - The following summary is based on information contained in our files. No new information was provided in the petition we received on May 11, 2004. The range of the Zuni bluehead sucker has been reduced by over 90%. The Zuni bluehead sucker currently occupies 9 river miles (15 kilometers) in 3 areas of New Mexico, and potentially occurs in 27 miles (43 kilometers) in the Kinlichee drainage of Arizona. However, the number of occupied miles in Arizona is unknown, and the genetic composition of these fish is still under investigation. Zuni bluehead sucker range reduction and fragmentation is caused by discontinuous surface water flow, introduced species, and habitat degradation from fine sediment deposition. Zuni bluehead sucker persist in very small creeks that are subject to very low flows and drying during periods of drought. Because of climate change (warmer air temperatures) stream flow is predicted to decrease in the Southwest, even if precipitation were to increase moderately. Warmer winter and spring temperatures cause an increased fraction of precipitation to fall as rain, resulting in a reduced snow pack, an earlier snow melt, and a longer dry season leading to decreased stream flow in the summer and a longer fire season. These changes would have a negative effect on Zuni bluehead sucker. Another major impact to populations of Zuni bluehead sucker was the application of fish toxicants through at least two dozen treatments in the Nutria and Pescado rivers between 1960 and 1975. Large numbers of Zuni bluehead suckers were killed during these treatments.

For several years, the New Mexico Department of Game and Fish has been the lead agency to develop a conservation plan for Zuni bluehead sucker. The Zuni Bluehead Sucker Recovery Plan was approved by the New Mexico State Game Commission during a State Game Commission meeting on December 15, 2004. The recovery plan recommends preservation and enhancement of extant populations and restoration of historical Zuni bluehead sucker populations. We believe the recovery actions prescribed by the State Recovery Plan will reduce and remove threats to this subspecies; however those actions will require further discussions and authorizations before they can be implemented. The ongoing threats including loss of habitat (loss of both historical and current habitat from beaver activity), degradation of remaining habitat (from nonnative species and land development), drought, fire, and climate change are high magnitude because they significantly affect the survival of the subspecies. We therefore maintained the current LPN of 3 for this subspecies.

Clams

Texas hornshell (*Popenaias popei*) – See above in ''*Summary of Listing Priority Changes in Candidates*.'' The above summary is based on information contained in our files. No new information was provided in the petition we received on May 11, 2004.

Fluted kidneyshell (*Ptychobranchus subtentum*) – The following summary is based on information contained in our files. No new information was provided in the petition we received on May 11, 2004. The fluted kidneyshell is a freshwater mussel (Unionidae) endemic to the Cumberland and Tennessee River systems (Cumberlandian Region) in Alabama, Kentucky, Tennessee, and Virginia. It requires shoal habitats in free-flowing rivers to survive and successfully recruit new individuals into its populations.

This species has been extirpated from numerous regional streams and is no longer found in the State of Alabama. Habitat destruction and alteration (e.g., impoundments, sedimentation, and pollutants) are the chief factors that contributed to its decline. The fluted kidneyshell was historically known from at least 37 streams but is currently restricted to no more than 12 isolated populations. Current status information for most of the 12 populations deemed to be extant is available from recent periodic sampling efforts (sometimes annually) and other field studies, particularly in the upper Tennessee River system. Some populations in the Cumberland River system have had recent surveys as well (e.g., Wolf, Little Rivers; Little South Fork; Horse Lick, Buck Creeks). Populations in Buck Creek, Little South Fork, Horse Lick Creek, Powell River, and North Fork Holston River have clearly declined over the past two decades. Based on recent information, the overall population of the fluted kidneyshell is declining rangewide. At this time, the species remains in large numbers and is viable in just the Clinch River/Copper Creek, although smaller, viable populations remain (e.g., Wolf, Little, North Fork Holston Rivers; Rock Creek). Most other populations are of questionable or limited viability, with some on the verge of extirpation (e.g., Powell River; Little South Fork; Horse Lick, Buck, Indian Creeks). Newly reintroduced populations in the Nolichucky and Duck Rivers will hopefully begin to reverse the downward population trend of this species. The threats are high in magnitude, since the majority of populations of this species are severely affected by numerous threats (impoundments, sedimentation, small population size, isolation of populations, gravel mining, municipal pollutants, agricultural runoff, nutrient enrichment, and coal processing pollution) which result in mortality and/or reduced reproductive output. Since the threats are ongoing, they are imminent. We assigned an LPN of 2 to this mussel species.

Neosho mucket (*Lampsilis rafinesqueana*) – The following summary is based on information contained in our files. No new information was provided in the petition we received on May 11, 2004. The Neosho mucket is a freshwater mussel native to Arkansas, Kansas, Missouri, and Oklahoma. The species has been extirpated from approximately 62 percent (835 river miles) of its range, most in Kansas and Oklahoma. The Neosho mucket survives in four river drainages; however, only two of these, the Spring and Illinois Rivers, currently support relatively large populations.

Large portions of the historic range have been inundated by the construction of at least 11 dams. Channel instability downstream of these dams has further reduced suitable habitat and mussel distribution. Range restriction and population declines have occurred due to habitat degradation attributed to impoundments, mining, sedimentation, and agricultural pollutants. Rapid development and urbanization in the Illinois River

watershed will likely continue to increase sedimentation and eutrophication, but populations are currently stable in this river. The threats to the remaining extant populations include random catastrophic events (e.g., flood scour, drought, toxic spills), land use changes within the limited range, and genetic isolation and the deleterious effects of inbreeding. These threats have caused the species to be intrinsically vulnerable to extirpation. Although State regulations limit harvest of this species, there is little protection for habitat. The threats are high in magnitude as they occur and affect survival throughout the range of this species. While some of the threats are ongoing and thus, imminent (sedimentation, mining), others are nonimminent (habitat reduction and degradation from reservoir construction, contaminants, genetic isolation), but on the balance are nonimminent. Thus, we assigned a listing priority number of 5 to this species.

Alabama pearlshell (*Margaritifera marrianae*) – The following summary is based on information contained in our files. No new information was provided in the petition we received on May 11, 2004. The Alabama pearlshell (*Margaritifera marrianae*) inhabits shallow riffles and pool margins of small creeks and streams of southwest Alabama. Only three populations of Alabama pearlshell have been confirmed to survive during the past 15 years. One of the three populations has declined significantly over the past few years, apparently due to increased sedimentation at this location and possibly other forms of non-point source (NPS) pollution. Most recent data suggest that the other two populations may also be declining. Severe droughts in 2007 may have also adversely affected surviving populations. We assigned the Alabama pearlshell an LPN of 2 because the NPS pollution is ongoing, and therefore imminent, and the vulnerability of small stream habitat to continuing NPS pollution, combined with the fewer numbers of live mussels in the three known populations, means that the NPS pollution poses a high-magnitude threat to this species.

Slabside pearlymussel (*Lexingtonia dolabelloides*) – See above in ''*Summary of Listing Priority Changes in Candidates*.'' The above summary is based on information contained in our files. No new information was provided in the petition we received on May 11, 2004.

Georgia pigtoe (*Pleurobema hanleyanum*) – We have not updated our assessment for this species, as we are currently developing a proposed listing rule.

Altamaha spinymussel (*Elliptio spinosa*) – We have not updated our assessment for this species, as we are currently developing a proposed listing rule.

Snails.

Fat-whorled (Bonneville) pondsnail (*Stagnicola bonnevillensis*) – See above in ''*Summary of Listing Priority Changes in Candidates*.'' The above summary is based on information contained in our files. No new information was provided in the petition we received on May 11, 2004.

Interrupted rocksnail (*Leptoxis foremani*) (=*downei*) – We have not updated our assessment for this species, as we are currently developing a proposed listing rule for this species.

Sisi snail (*Ostodes strigatus*) – The following summary is based on information contained in our files. No new information was provided in the petition we received on May 11, 2004. The sisi snail is a ground-dwelling species in the Potaridae family, and is endemic to American Samoa. The species is now known from a single population on the island of Tutuila, American Samoa.

This species is currently threatened by habitat loss and modification and by predation from nonnative predatory snails. The decline of the sisi in American Samoa has resulted, in part, from loss of habitat to forestry and agriculture and loss of forest structure to hurricanes and alien weeds that establish after these storms. All live sisi snails have been found in the leaf litter beneath remaining intact forest canopy. No snails were found in areas bordering agricultural plots or in forest areas that were severely damaged by three hurricanes (1987, 1990, and 1991). Under natural historic conditions, loss of forest canopy to storms did not pose a great threat to the long-term survival of these snails; enough intact forest with healthy populations of snails would support dispersal back into newly regrown canopy forest. However, the presence of alien weeds such as mile-a-minute vine (*Mikania micrantha*) may reduce the likelihood that native forest will re-establish in areas damaged by the hurricanes. This loss of habitat to storms is greatly exacerbated by expanding agriculture. Agricultural plots on Tutuila have spread from low elevation up to middle and some high elevations, greatly reducing the forest area and thus reducing the resilience of native forests and its populations of native snails. These reductions also increase the likelihood that future storms will lead to the extinction of populations or species that rely on the remaining canopy forest. In an effort to eradicate the giant African snail (*Achatina fulica*), the alien rosy carnivore snail (*Euglandia rosea)* was introduced in 1980. The rosy carnivore snail has spread throughout the main island of Tutuila. Numerous studies show that the rosy carnivore snail feeds on endemic island snails including the sisi, and is a major agent in their declines and extirpations. At present, the major threat to long-term survival of the native snail fauna in American Samoa is predation by nonnative predatory snails. These threats are ongoing and are therefore imminent. Since the threats occur throughout the entire range of the species and have a significant effect on the survival of the snails, they are of a high magnitude. Therefore we assigned this species an LPN of 2.

Diamond Y Spring snail (*Pseudotryonia adamantina*) and Gonzales springsnail (*Tryonia circumstriata*) – The following summary is based on information contained in our files. No new information was provided in the petition we received on May 11, 2004. Diamond Y Spring snail and Gonzales springsnail are small aquatic snails endemic to Diamond Y Spring in Pecos County, Texas. The spring and its outflow channel are owned and managed by The Nature Conservancy.

These snails are primarily threatened with habitat loss due to springflow declines from drought and from pumping of groundwater. Additional threats include water contamination from accidental releases of petroleum products, as their habitat is in an active oil and gas field. Also, a nonnative aquatic snail (*Melanoides* sp.) was recently introduced into the native snails' habitat, and may compete with endemic snails for space and resources. The magnitude of threats is high because limited distribution of these narrow endemics makes any impact from increasing threats (e.g., loss of springflow, contaminants, and nonnative species) likely to result in the extinction of the species. These species occur in one location in an arid region currently plagued by drought and ongoing aquifer withdrawals, making the eventual loss of spring flow an imminent threat of total habitat loss. Thus, we maintain the LPN of 2 for both species.

Fragile tree snail (*Samoana fragilis*) – The following summary is based on information contained in our files. No new information was provided in the petition we received on May 11, 2004.

A tree-dwelling species, the fragile tree snail is a member of the Partulidae family of snails, and is endemic to the islands of Guam and Rota (Mariana Islands). Requiring cool and shaded native forest habitat, the species is now known from 4 populations on Guam and a single population on Rota.

This species is currently threatened by habitat loss and modification and by predation from nonnative predatory snails and flatworms. Large numbers of Philippine deer (*Cervus mariannus*) (Guam and Rota), pigs (*Sus scrofra*) (Guam), water buffalo (*Bubalus bubalis*) (Guam), and cattle (*Bos taurus*) (Rota) directly alter the understory plant community and overall forest microclimate, making it unsuitable for snails. Predation by the alien rosy carnivore snail (*Euglandina rosea*) and the Manokwar flatworm (*Platydemus manokwari*) is a serious threat to the survival of the fragile tree snail. Field observations have established that the rosy carnivore snail and the Manokwar flatworm will readily feed on native Pacific island tree snails, including the Partulidae, such as those of the Mariana Islands. The rosy carnivore snail has caused the extirpation of many populations and species of native snails throughout the Pacific islands. The Manokwar flatworm has also contributed to the decline of native tree snails, in part due to its ability to ascend into trees and bushes that support native snails. Areas with populations of the flatworm usually lack partulid tree snails or have declining numbers of snails. Because all of the threats occur rangewide and have a significant effect on the survival of this snail species, they are high in magnitude. The threats are also ongoing and thus are imminent. Therefore, we assigned this species an LPN of 2.

Guam tree snail (*Partula radiolata*) – The following summary is based on information contained in our files. No new information was provided in the petition we received on May 11, 2004. A tree-dwelling species, the Guam tree snail is a member of the Partulidae family of snails and is endemic to the island of Guam. Requiring cool and shaded native forest habitat, the species is now known from 22 populations on Guam.

This species is primarily threatened by predation from nonnative predatory snails and flatworms. In addition, the species is also threatened by habitat loss and degradation. Predation by the alien rosy carnivore snail (*Euglandina rosea*) and the alien Manokwar flatworm (*Platydemus manokwari*) is a serious threat to the survival of the Guam tree snail (see summary for the fragile tree snail, above). On Guam, open agricultural fields and other areas prone to erosion were seeded with tangantangan (*Leucaena leucocephala*) by the U.S. Military. Tangantangan grows as a single species stand with no substantial understory. The microclimatic condition is dry with little accumulation of leaf litter humus and is particularly unsuitable as Guam tree snail habitat. In addition, native forest cannot reestablish and grow where this alien weed has become established. Because all of the threats occur rangewide and have a significant effect on the survival of this snail species, they are high in magnitude. The threats are also ongoing and thus are imminent. Therefore, we assigned this species an LPN of 2.

Humped tree snail (*Partula gibba*) – The following summary is based on information contained in our files. No new information was provided in the petition we received on May 11, 2004. A tree-dwelling species, the humped tree snail is a member of the Partulidae family of snails, and was originally known from the island of Guam and the Commonwealth of the Northern Mariana Islands (islands of Rota, Aguiguan, Tinian, Saipan, Anatahan, Sarigan, Alamagan, and Pagan). Most recent surveys revealed a total of 14 populations on the islands of Guam, Rota, Aguiguan, Sarigan, Saipan, Alamagan, and Pagan. Although still the most widely distributed tree snail endemic in the Mariana Islands, remaining population sizes are often small.

This species is currently threatened by habitat loss and modification and by predation from nonnative predatory snails and flat worms. Throughout the Mariana Islands, feral ungulates (pigs (*Sus scrofa*), Philippine deer (*Cervus mariannus*), cattle (*Bos taurus*), water buffalo (*Bubalus bubalis*), and goats (*Capra hircus*)) have caused severe damage to native forest vegetation by browsing directly on plants, causing erosion, and retarding forest growth and regeneration. This in turn reduces the quantity and quality of forested habitat for the humped tree snail. Currently, populations of feral ungulates are found on the islands of Guam (deer, pigs, and water buffalo), Rota (deer and cattle), Aguiguan (goats), Saipan (deer, pigs, and cattle), Alamagan (goats, pigs, and cattle), and Pagan (cattle, goats, and pigs). Goats were eradicated from Sarigan in 1998 and the humped tree snail has increased in abundance on that island, likely in response to the removal of all the goats. However, the population of humped tree snails on Anatahan is likely extirpated due to the massive volcanic explosions of the island beginning in 2003 and still continuing, and the resulting loss of up to 95 percent of the vegetation on the island. Predation by the alien rosy carnivore snail (*Euglandina rosea*) and the alien Manokwar flatworm (*Platydemus manokwari*) is a serious threat to the survival of the humped tree snail (see summary for the fragile tree snail, above). The magnitude of threats is high because these alien predators cause significant population declines to the humped tree snail rangewide. These threats are ongoing and thus are imminent. Therefore, we assigned this species an LPN of 2.

Lanai tree snail (*Partulina semicarinata*) – The following summary is based on information contained in our files. No new information was provided in the petition we received on May 11, 2004. A tree-dwelling species, *P. semicarinata* is a member of the Achatinellidae family of snails. Endemic to the island of Lanai, the species is currently known from 3 populations totaling 29 individuals. This species is highly threatened throughout its limited range by habitat loss and modification and by predation from rats. No efforts are being undertaken to remove rats in areas where *P. semicarinata* occur. The threat from this predator is expected to continue or increase unless the rats are actively controlled or eradicated. Habitat loss also continues as nonnative ungulates trample and browse native vegetation required by *P. semicarinata*. Although the snails are in an area to be fenced, the habitat will continue to be degraded until the fence is completed and the ungulates have been removed. The small number of individuals and the small number of populations make this species very susceptible to the negative effects of stochastic events such as hurricanes and storms. A population in captivity is protected from the effects of unexpected droughts, although the effects of severe storms may still affect this population as evidenced by the loss of snails when a severe flood interrupted the power supply to the Hawaii Endangered Snail Captive Propagation Lab and temperatures increased within the environmental chambers containing the snails. In addition, these captive snails are likely subjected to the same risks of reduced reproductive vigor and loss of genetic variability as the snail in the wild population. The magnitude of threats is high because they cause significant population declines to *P.semicarinata* rangewide. The threats are also ongoing and thus are imminent.

Therefore, we assigned this species an LPN of 2.

Lanai tree snail (*Partulina variabilis*) – The following summary is based on information contained in our files. No new information was provided in the petition we received on May 11, 2004. A tree-dwelling species, *P. variabilis* is a member of the Achatinellidae family of snails. Endemic to the island of Lanai, the species is currently known from 12 populations totaling 90 individuals. This species is highly threatened throughout its limited range by habitat loss and modification and by predation from rats. The same description of threats for *P. semicarinata*, above, applies to this species, including threats to a population in captivity. The magnitude of threats is high because they result in direct mortality or significant population declines to *P. variabilis* rangewide. The threats are ongoing and thus are imminent. Therefore, we assigned this species an LPN of 2.

Langford's tree snail (*Partula langfordi*) – The following summary is based on information contained in our files. No new information was provided in the petition we received on May 11, 2004. A tree-dwelling species, Langford's tree snail is a member of the Partulidae family of snails, and is known from one population on the island of Aguiguan. This species is currently threatened by habitat loss and modification and by predation from nonnative predatory snails. In the 1930s, the island of Aguiguan was mostly cleared of native forest to support sugar cane and pineapple production. The abandoned fields and airstrip are now overgrown with alien weeds. The remaining native forest understory has greatly suffered from large and uncontrolled populations of alien goats and the invasion of weeds. Goats (*Capra hircus*) have caused severe damage to native forest vegetation by browsing directly on plants, causing erosion, and retarding forest growth and regeneration. This in turn reduces the quantity and quality of forested habitat for Langford's tree snail. Predation by the alien rosy carnivore snail (*Euglandina rosea*) and by the Manokwar flatworm (*Platydemus manokwari*) (see summary for the fragile tree snail, above) is also a serious threat to the survival of Langford's tree snail. All of the threats are occurring rangewide and no efforts to control or eradicate the nonnative predatory snail species or to reduce habitat loss are being undertaken. The magnitude of threats is high because they result in direct mortality or significant population declines to Langford's tree snail rangewide. A survey of Aguiguan in November 2006 failed to find any live Langford's tree snails. These threats are also ongoing and thus are imminent. Therefore, we assigned this species an LPN of 2.

Newcomb's tree snail (*Newcombia cumingi*) – The following summary is based on information contained in our files. No new information was provided in the petition we received on May 11, 2004. The species is endemic to the island of Maui, where it is currently known from a single remaining population. The greatest threats to Newcomb's tree snail are the loss of the only known remaining population due to predation from rats and the rosy carnivore snail (*Euglandina rosea*). There are no efforts in place to reduce the threat from the rosy carnivore snail. Discussions are underway with the private landowner to construct a rat-proof fence in the area occupied by this snail. Our attempts to raise this species in a captive propagation facility have been unsuccessful. The magnitude of threats is high because they occur within the last known population of the species and result in direct mortality or significant population declines. These threats are also ongoing and thus are imminent. Therefore, we assigned this species an LPN of 2.

Phantom Cave snail (*Cochliopa texana*) and Phantom springsnail (*Tryonia cheatumi*) – The following summary is based on information contained in our files. No new information was provided in the petition we received on May 11, 2004. Phantom Cave snail and Phantom springsnail are small aquatic snails that occur in three spring outflows in the Toyah Basin in Reeves and Jeff Davis Counties, Texas. The primary threat to both species is the loss of surface flows due to declining groundwater levels from drought and pumping for agricultural production. Although much of the land immediately surrounding their habitat is owned and managed by The Nature Conservancy, Bureau of Reclamation, and Texas Parks and Wildlife Department, the water which is needed to maintain their habitat, has declined due to a reduction in spring flows, possibly as a result of private groundwater pumping in areas beyond that controlled by these landowners. As an example, Phantom Lake Spring, one of the sites of occurrence, has already ceased flowing, and aquatic habitat in the spring is supported only by a pumping system. The magnitude of the threats is high because spring flow loss would result in complete habitat destruction and permanent elimination of all populations of the species. The immediacy of the threats is imminent, as evidenced by the drastic decline in spring flow at Phantom Lake Spring that is currently happening and may extirpate these populations in the near future. Declining spring flows in San Solomon Spring are also becoming evident, and will affect that spring site as well within the foreseeable future. Thus, we maintained the LPN of 2 for both species.

Tutuila tree snail (*Eua zebrina*) – The following summary is based on information contained in our files. No new information was provided in the petition we received on May 11, 2004. A tree-dwelling species, the Tutuila tree snail is a member of the Partulidae family of snails, and is endemic to American Samoa. The species is known from 32 populations on the islands of Tutuila, Nuusetoga, and Ofu.

This species is currently threatened by habitat loss and modification and by predation from nonnative predatory snails and rats. All live Tutuila tree snails were found on understory vegetation beneath remaining intact forest canopy. No snails were found in areas bordering agricultural plots or in forest areas that were severely damaged by three hurricanes (1987, 1990, and 1991). (See summary for the sisi snail, above, regarding impacts of alien weeds and of the rosy carnivore snail.). Rats (*Rattus* spp) have also been shown to devastate snail populations, and rat-chewed snail shells have been found at sites where the Tutuila snail occurs. At present, the major threat to the long-term survival of the native snail fauna in American Samoa is predation by nonnative predatory snails and rats. The magnitude of threats is high because they result in direct mortality or significant population declines to the Tutuila tree snail rangewide. The threats are also ongoing and thus are imminent. Therefore, we assigned this species an LPN of 2.

Chupadera springsnail (*Pyrgulopsis chupaderae*) – We have not updated our assessment for this species, as we are currently developing a proposed listing rule.

Elongate mud meadows springsnail (*Pyrgulopsis notidicola*) – See above in ''*Summary of Listing Priority Changes in Candidates*.'' The above summary is based on information contained in our files. No new information was provided in the petition received on May 11, 2004.

Gila springsnail (*Pyrgulopsis gilae*) – The following summary is based on information contained in our files and the petition we received on November 20, 1985. Also see our 12–month petition finding published in the

Federal Register on October 4, 1988 (53 FR 38969). The Gila springsnail is an aquatic species known from 13 populations in New Mexico. Surveys conducted in 2008 may have located two additional populations, but the identification of the species at those sites awaits confirmation. Preliminary assessment of springsnail collections made in 2008 indicates there are morphological differences between some Gila springsnail populations, which suggests there may be some level of genetic divergence or speciation.

The long-term persistence of the Gila springsnail is contingent upon protection of the riparian corridor immediately adjacent to the springhead and springrun. Sites on both private and Federal lands are subject to levels of recreational use and livestock grazing that negatively affect this species, thus placing the long-term survival of the Gila springsnail at risk. Natural events such as drought, forest fire, sedimentation, and flooding; wetland habitat degradation by recreational bathing in thermal springs; and poor watershed management practices represent the primary threats to the Gila springsnail. Fire suppression activities and fire retardant chemicals have potentially deleterious effects on this species, as well. Because several of the springs occur on U.S. Forest Service land, management options for the protection of the snail should be possible. However, randomly occurring events, especially fire and drought, could have a major impact on the species. Moderate use by recreationalists and livestock is ongoing. If these uses remain at current or lower levels, they will not pose an imminent threat to the species. Of greater concern is drought, which could affect spring discharge and increases the potential for fire. Although the effect global warming will have on streams and forests of the Southwest is unpredictable, mean annual temperatures in New Mexico have increased by 0.6 degrees per decade since 1970. Higher temperatures lead to higher evaporation rates which may reduce the amount of runoff and groundwater recharge. Increased temperatures may also increase the extent of area influenced by drought and fire. Large fires have occurred in the Gila National Forest and subsequent floods and ash flows have severely affected aquatic life in streams. Although some of the threats facing the species are ongoing and therefore imminent (such as livestock and recreational uses), the biggest threats are nonimminent (such as fire, drought, and increased temperatures). Therefore, the threats overall are nonimminent. The threats are moderate to low magnitude because the threats are occurring at low levels and populations appear to be stable. Therefore, we retained a listing priority number of 11 for this species.

Gonzales springsnail (*Tryonia circumstriata*) – See summary above under Diamond Y Spring snail (*Pseudotryonia adamantina*).

Huachuca springsnail (*Pyrgulopsis thompsoni*) – The following is based on information contained in our files. No new information was provided in the petition we received on May 11, 2004. The Huachuca springsnail inhabits approximately 16 springs and cienegas at elevations of 4,500 to 7,200 feet in southeastern Arizona (14 sites) and adjacent portions of Sonora, Mexico (2 sites). The springsnail is typically found in the shallower areas of springs or cienegas, often in rocky seeps at the spring source. Ongoing threats include habitat modification and destruction through catastrophic wildfire, drought, streamflow alteration, and, potentially, grazing, recreation, military activities, and timber harvest. Overall, the threats are moderate in magnitude because threats are not occurring throughout the range of the species uniformly and not all populations would likely be impacted simultaneously by any of the known threats. In addition, multiple landowners (Forest Service, Fort Huachuca, The Nature Conservancy) are including consideration for the springsnail or other co-occurring listed species in their activities. The threats are ongoing and, thus, imminent. Therefore, we have assigned an LPN of 8 to this species.

New Mexico springsnail (*Pyrgulopsis thermalis*) – We have not updated our assessment for this species, as we are currently developing a proposed listing rule.

Page springsnail (*Pyrgulopsis morrisoni*) – The following summary is based on information contained in our files. No new information was provided in the petition received on May 11, 2004. The Page springsnail is known to exist only within a complex of springs located within an approximately 0.93-mi (1.5-km) stretch along the west side of Oak Creek around the community of Page Springs, and within springs located along Spring Creek, tributary to Oak Creek, Yavapai County, Arizona. The primary threat to the Page springsnail is modification for domestic, agricultural, ranching, fish hatchery, and recreational activities. Many of the springs where the species occurs have been subjected to some level of such modification. Arizona Game and Fish Department management plans for the Bubbling Ponds and Page Springs fish hatcheries include commitments to replace lost habitat and to monitor remaining populations of invertebrates such as the Page springsnail. A draft Candidate Conservation Agreement with Assurances was published and available for public review and comment on January 28, 2008. Based on recent survey data, it appears that the Page springsnail is abundant within natural habitats and persists in modified habitats, albeit at reduced densities. The magnitude of threats is considered high because limited distribution of this narrow endemic makes any detrimental effects from threats likely to result in extirpation or extinction. The immediacy of the threat of ground water withdrawal is uncertain due to conflicting information regarding imminence. However, overall, the threats are imminent because modification of the species' habitat is currently occurring. Therefore, we retain an LPN of 2 for the Page springsnail.

Phantom springsnail (*Tyronia cheatumi*) – See summary above under Phantom Cave snail (*Cochliopa texana*).

Three Forks springsnail (*Pyrgulopsis trivialis*) – We have not updated our assessment for this species, as we are currently developing a proposed listing rule.

Insects

Wekiu bug (*Nysius wekiuicola*) – The following summary is based on information contained in our files. No new information was provided in the petition we received on May 11, 2004. The wekiu bug belongs to the true bug family, Lygaeidae, and is endemic to the island of Hawaii. This species only occurs on the summit of Mauna Kea and feeds upon other insect species which are blown to the summit of this large volcano. The wekiu bug is primarily threatened by the loss of its habitat from astronomy development. In 2004 and early 2005, surveys found multiple new locations of the wekiu bug on cinder cones on the Mauna Kea summit. Several of these cinder cones within the Mauna Kea Science Reserve, as well as two cinder cones located in the State Ice Age Natural Area Reserve, are not currently undergoing development nor are they the site of any planned development. Thus, the threats, although ongoing, do not occur across the entire range of the wekiu bug. Because there are occupied locations that are not subject to the primary threat of astronomy development, the overall magnitude of the threat is moderate. The immediacy of the threats is imminent because there are significant parts of the

wekiu bug's range where ongoing development is occurring. Therefore, we assigned this species an LPN of 8.

Mariana eight spot butterfly (*Hypolimnas octucula mariannensis*) - The following summary is based on information contained in our files. No new information was provided in the petition we received on May 11, 2004. The Mariana eight spot butterfly is a nymphalid butterfly species that feeds upon two host plants, *Procris pedunculata* and *Elatostema calcareum*. Endemic to the islands of Guam and Saipan, the species is now known from ten populations on Guam. This species is currently threatened by predation and parasitism. The Mariana eight spot butterfly has extremely high mortality of eggs and larvae due to predation by alien ants and wasps. Because the threat of parasitism and predation by nonnative insects occurs range-wide and can cause significant population declines to this species, they are high in magnitude. The threats are imminent because they are ongoing. Therefore, we assigned an LPN of 3 for this subspecies.

Mariana wandering butterfly (*Vagrans egestina*) - The following summary is based on information contained in our files. No new information was provided in the petition we received on May 11, 2004. The Mariana wandering butterfly is a nymphalid butterfly species which feeds upon a single host plant species, *Maytenus thompsonii*. Originally known from and endemic to the islands of Guam and Rota, the species is now known from one population on Rota. This species is currently threatened by alien predation and parasitism. The Mariana wandering butterfly is likely predated on by alien ants and parasitized by native and nonnative parasitoids. Because the threat of parasitism and predation by nonnative insects occurs range-wide and can cause significant population declines to this species, they are high in magnitude. These threats are imminent because they are ongoing. Therefore, we assigned an LPN of 2 for this species.

Miami blue butterfly (*Cyclargus thomasi bethunebakeri*) – The following summary is based on information contained in our files and in the petition we received on June 15, 2000. The Miami blue is endemic to south Florida. Historically, it occurred throughout the Florida Keys, north to Hillsborough and Volusia Counties. None were reported to be found between 1996 and 1999. It is presently located at two sites in the Keys. In 1999, a metapopulation was discovered at Bahia Honda State Park on Bahia Honda Key and in 2006 a second metapopulation was discovered on the outer islands of Key West National Wildlife Refuge. The former appears restricted to several hundred individuals at most, while the latter likely includes at least 1,500 individuals. Capacity to expand at either site or successfully emigrate from either site appears to be very low due to the sedentary nature of the butterfly and isolation of habitats. Captive propagation and reintroduction efforts are continuing, but success has yet to be shown. The Miami blue is predominantly a coastal species, occurring in disturbed and early successional habitats such as the edges of tropical hardwood hammock, coastal berm forest, and along trails and other open sunny areas, and historically in pine rocklands. These habitats provide larval host plants and adult nectar sources that are required to occur in close proximity. The primary threats to the subspecies are the limited population size and range, hurricanes, and mosquito control activities. In addition, illegal collection may also pose a threat. The threats are high in magnitude because they occur rangewide and in combination affect the population levels. Except for hurricanes, the threats are nonimminent because the current range is within a State park and National Wildlife Refuge, where the above threats are substantially controlled. Therefore, we assigned the Miami blue a LPN of 6.

Sequatchie caddisfly (*Glyphopsyche sequatchie*) – The following summary is based on information in our files. No new information was provided in the petition wereceived on May 11, 2004. The Sequatchie caddisfly is known from two spring runs that emerge from caves in Marion County, Tennessee - Owen Spring Branch (the type locality) and Martin Spring run in the Battle Creek system. In 1998, biologists estimated population sizes at 500 to 5000 individuals for Owen Spring Branch and 2 to 10 times higher at Martin Spring, due to the greater amount of apparently suitable habitat. In spite of greater amounts of suitable habitat at the Martin Spring run, Sequatchie caddisflies are more difficult to find at this site, and in 2001 (the most recent survey) the Sequatchie caddisfly was ''abundant'' at the Owen Spring Branch location, while only two individuals were observed at the Martin Spring. Threats to the Sequatchie caddisfly include siltation, point and nonpoint discharges from municipal and industrial activities and introduction of toxicants during episodic events. These threats, coupled with the extremely limited distribution of the species, its apparent small population size, the limited amount of occupied habitat, ease of accessibility, and the annual life cycle of the species, are all factors that leave the Sequatchie caddisfly vulnerable to extirpation. Therefore, the magnitude of the threat is high. These threats are gradual and/or not necessarily imminent. Based on high-magnitude, nonimminent threats, we assigned this species a listing priority number of 5.

Clifton cave beetle (*Pseudanophthalmus caecus*) – The following summary is based upon information contained in our files. No new information was provided in the petition we received on May 11, 2004. Clifton cave beetle is a small, eyeless, reddish-brown predatory insect that feeds upon small cave invertebrates. It is cave dependent, and is not found outside the cave environment. Clifton cave beetle is only known from two privately owned Kentucky caves. Soon after the species was first collected in 1963 in one cave, the cave entrance was enclosed due to road construction. We do not know whether the species still occurs at the original location or if it has been extirpated from the site by the closure of the cave entrance. Other caves in the vicinity of this cave were surveyed for the species during a 1995-1996. Only one additional site was found to support the Clifton Cave beetle. The limestone caves in which the Clifton cave beetle is found provide a unique and fragile environment that supports a variety of species that have evolved to survive and reproduce under the demanding conditions found in cave ecosystems. The limited distribution of the species makes it vulnerable to isolated events that would only have a minimal effect on the more wide-ranging insects. Events such as toxic chemical spills, discharges of large amounts of polluted water or indirect impacts from off-site construction activities, closure of entrances, alteration of entrances, or the creation of new entrances could have serious adverse impacts on this species. Therefore, the magnitude of threat is high for this species. The immediacy of threat is nonimminent because there are no known projects planned that would affect the species in the near future. We therefore have assigned a listing priority number of 5 to this species.

Icebox cave beetle (*Pseudanophthalmus frigidus*) – The following summary is based upon information contained in our files. No new information was provided in the petition we received on May 11, 2004. Icebox cave beetle is a small, eyeless, reddish-brown predatory insect that feeds upon small cave invertebrates. It

is not found outside the cave environment, and is only known from one privately owned Kentucky cave. The limestone cave in which this species is found provides a unique and fragile environment that supports a variety of species that have evolved to survive and reproduce under the demanding conditions found in cave ecosystems. The species has not been observed since it was originally collected, but species experts believe that it may still exist in the cave in low numbers. The limited distribution of the species makes it vulnerable to isolated events that would only have a minimal effect on the more wide-ranging insects. Events such as toxic chemical spills or discharges of large amounts of polluted water, or indirect impacts from off-site construction activities, closure of entrances, alteration of entrances, or the creation of new entrances, could have serious adverse impacts on this species. Therefore, the magnitude of threat is high for this species because it is limited in distribution and the threats would result in mortality or reduced reproductive capacity. The immediacy of threat is nonimminent because there are no known projects planned that would affect the species in the near future. We therefore have assigned an LPN of 5 to this species.

Inquirer cave beetle (*Pseudanophthalmus inquisitor*) – The following summary is based upon information contained in our files. No new information was provided in the petition we received on May 11, 2004. The inquirer cave beetle is a fairly small, eyeless, reddish-brown predatory insect that feeds upon small cave invertebrates. It is not found outside the cave environment, and is only known from one privately owned Tennessee cave. The limestone cave in which this species is found provides a unique and fragile environment that supports a variety of species that have evolved to survive and reproduce under the demanding conditions found in cave ecosystems. The species was last observed in 2006. The limited distribution of the species makes it vulnerable to isolated events that would only have a minimal effect on the more wide-ranging insects. The area around the only known site for the species is in a rapidly expanding urban area. The entrance to the cave is protected by the landowner through a cooperative management agreement with the Service, The Nature Conservancy and Tennessee Wildlife Resources Agency; however, a sinkhole that drains into the cave system is located away from the protected entrance and is near a highway. Events such as toxic chemical spills, discharges of large amounts of polluted water or indirect impacts from off-site construction activities could adversely affect the species and the cave habitat. The magnitude of threat is high for this species because it is limited in distribution and the threats would have negative impacts on its continued existence. The threats are nonimminent because there are no known projects planned that would affect the species in the near future and it receives some protection under a cooperative management agreement. We therefore have assigned a listing priority number of 5 to this species.

Louisville cave beetle (*Pseudanophthalmus troglodytes*) – The following summary is based upon information contained in our files. No new information was provided in the petition we received on May 11, 2004. The Louisville cave beetle is a small, eyeless, reddish-brown predatory insect that feeds upon cave invertebrates. It is not found outside the cave environment, and is only known from two privately owned Kentucky caves. The limestone caves in which this species is found provide a unique and fragile environment that supports a variety of species that have evolved to survive and reproduce under the demanding conditions found in cave ecosystems. The limited distribution of the species makes it vulnerable to isolated events that would only have a minimal effect on the more wide-ranging insects. Events such as toxic chemical spills, discharges of large amounts of polluted water or indirect impacts from off-site construction activities, closure of entrances, alteration of entrances, or the creation of new entrances could have serious adverse impacts on this species. The magnitude of threat is high for this species, because it is limited in distribution and the threats would have negative impacts on the species. The immediacy of threat is nonimminent because there are no known projects planned that would affect the species in the near future. We therefore have assigned an LPN of 5 to this species.

Tatum Cave beetle (*Pseudanophthalmus parvus*) – The following summary is based upon information contained in our files. No new information was provided in the petition we received on May 11, 2004. Tatum Cave beetle is a small, eyeless, reddish-brown predatory insect that feeds upon cave invertebrates. It is not found outside the cave environment, and is only known from one privately owned Kentucky cave. The limestone cave in which this species is found provides a unique and fragile environment that supports a variety of species that have evolved to survive and reproduce under the demanding conditions found in cave ecosystems. The species has not been observed since 1965, but species experts believe that it still exists in low numbers. The limited distribution of the species makes it vulnerable to isolated events that would only have a minimal effect on the more wide-ranging insects. Events such as toxic chemical spills or discharges of large amounts of polluted water, or indirect impacts from off-site construction activities, closure of entrances, alteration of entrances, or the creation of new entrances could have serious adverse impacts on this species. The magnitude of threat is high for this species, because its limited numbers mean that any threats could affect its continued existence. The immediacy of threat is nonimminent because there are no known projects planned that would affect the species in the near future. We therefore have assigned an LPN of 5 to this species.

Taylor's (Whulge, Edith's) checkerspot butterfly (*Euphydryas editha taylori*) – The following summary is based on information contained in our files and in the petition received on December 11, 2002. Historically, the Taylor's checkerspot butterfly was known from 70 locations: 23 in British Columbia, 34 in Washington, and 13 in Oregon. Based on surveys during the 2008 flight period, 11 populations are now known, with a total of about 2,500 to 3,000 individuals observed rangewide. Currently, eight populations are known from Washington, two in the Willamette Valley of Oregon and one on Denman Island, British Columbia, Canada.

Threats include degradation and destruction of native grasslands due to agriculture; residential and commercial development; encroachment by nonnative plants; succession from grasslands to native shrubs and trees; and fire. The grassland ecosystem on which this subspecies depends requires annual management to maintain suitable grassland habitat for the species. The application of *Bacillus thuringiensis* var. *kurstake* (Btk) for Asian gypsy moth control was routinely applied in Pierce County, Washington for many years. This pesticide is documented to have deleterious effects on non-target lepidopteron species, including all moths and butterflies. Because of the timing and close proximity of the Btk application to native prairies where Taylors' checkerspot adults, or their larvae, were historically known to occur, it is likely that the spraying contributed to the

extirpation of the subspecies at three locations in Pierce County, Washington.

Threats also include the loss of prairies to development or the conversion of native grasslands to agriculture; the threat of vehicle and foot traffic that crushes larvae and larval host plants on roads where host plants have become established, thus acting as a mortality sink at north Olympic Peninsula sites. Other important threats include changes to the structure and composition of prairie habitat brought on by the invasion of shrubs and trees (Scot's broom and Douglas-fir) or nonnative pasture grasses that quickly invade onto prairies when processes like fire, or its surrogate mowing, are not implemented. These changes to prairie habitat threaten Taylor's checkerspot by degrading prairie habitat and making it unsuitable for the butterfly. The threats that lead to habitat degradation and loss are ubiquitous, occurring rangewide, and affect the survival of the subspecies. Therefore, they are high in magnitude. The threats are imminent because they are ongoing and occur simultaneously at all of the known locations for the subspecies. Based on the high magnitude and the imminent nature of threats, we assigned the Taylor's checkerspot butterfly a listing priority number of 3.

Blackline Hawaiian damselfly (*Megalagrion nigrohamatum nigrolineatum*) – We have not updated our assessment for this species, as we are currently developing a proposed listing rule.

Crimson Hawaiian damselfly (*Megalagrion leptodemas*) – We have not updated our assessment for this species, as we are currently developing a proposed listing rule.

Flying earwig Hawaiian damselfly (*Megalagrion nesiotes*) – We have not updated our assessment for this species, as we are currently developing a proposed listing rule.

Oceanic Hawaiian damselfly (*Megalagrion oceanicum*) – We have not updated our assessment for this species, as we are currently developing a proposed listing rule.

Orangeblack Hawaiian damselfly *(Megalagrion xanthomelas*) – The following summary is based on information contained in our files. No new information was provided in the petition we received on May 11, 2004. The orangeblack Hawaiian damselfly is a stream-dwelling species endemic to the Hawaiian Islands of Kauai, Oahu, Molokai, Maui, Lanai, and Hawaii. The species no longer is found on Kauai, and is now restricted to 16 populations on the islands of Oahu, Maui, Molokai, Lanai, and Hawaii. This species is threatened by predation from alien aquatic species such as fish and predacious insects and habitat loss through dewatering of streams and invasion by nonnative plants. Nonnative fish and insects prey on the naiads of the damselfly, and loss of water reduces the amount of suitable naiad habitat available. Invasive plants (e.g., California grass (*Brachiaria mutica*)) also contribute to loss of habitat by forming dense, monotypic stands that completely eliminate any open water. Nonnative fish and plants are found in all the streams the orangeblack damselfly occur in, except the Oahu location, where there are no nonnative fish. We assigned this species an LPN of 8 because, although the threats are ongoing and therefore imminent, they affect the survival of the species in varying degrees throughout the range of the species and are of moderate magnitude.

Pacific Hawaiian damselfly (*Megalagrion pacificum*) – We have not updated our assessment for this species, as we are currently developing a proposed listing rule.

Picture-wing fly (*Drosophila digressa*) – The following summary is based on information contained in our files. No new information was provided in the petition we received on May 11, 2004, but new information was provided by one *Drosophila* expert in 2006. This picture-wing fly, a member of the family Drosophilidae, feeds only upon species of *Charpentiera*, and is endemic to the Hawaiian Island of Hawaii. Never abundant in number of individuals observed, *D. digressa* was originally known from 5 population sites and may now be limited to as few as 1 or 2 sites. Due to the small population size of the species and its small known habitat area, *Drosophila* researchers believe this species and its habitat are particularly vulnerable to a myriad of threats. Feral ungulates (pigs, goats, and cattle) degrade and destroy *D. digressa* host plants and habitat by directly trampling plants, facilitating erosion, and spreading nonnative plant seeds. Nonnative plants degrade host plant habitat and compete for light, space, and nutrients. Direct predation of *D. digressa* by nonnative social insects, particularly yellow jacket wasps, is also a serious threat. Additionally, this species faces competition at the larval stage from nonnative tipulid flies, which feed within the same portion of the decomposing host plant area normally occupied by the *D. digressa* larvae during their development with a resulting reduction in available host plant material. The threats to the native forest habitat of *D. digressa*, and to individuals of this species, occur throughout its range and are expected to continue or increase unless efforts at control or eradication are undertaken. In additions, because of the limited distribution and small population of the species, any of the threats would significantly impair survival of the species. The threats are also imminent, because they are ongoing. No known conservation measures have been taken to date to specifically address these threats, and we have therefore assigned this species an LPN of 2.

Stephan's riffle beetle (*Heterelmis stephani*) – The following summary is based on information contained in our files. No new information was provided in the petition received on May 11, 2004. The Stephan's riffle beetle is an endemic riffle beetle found in limited spring environments within the Santa Rita Mountains, Pima County, Arizona. The beetle is known from Sylvester Springs in Madera Canyon, within the Coronado National Forest. These springs are typical isolated, mid-elevation, permanently saturated, spring-fed aquatic climax communities commonly referred to as cienegas. Threats are largely from habitat modification (from recreational activities in the springs and changes in water chemistry due to catastrophic natural disasters such as fires or floods). The threats to be of moderate to low magnitude based on our current knowledge of the permanence of threats and the likelihood that the species will persist in areas that are unaffected by the threats. Because the threats from recreational activities are currently occurring, they are imminent. Therefore, we assigned a LPN of 8 to the Stephan's riffle beetle.

Casey's junebeetle (*Dinacoma caseyi*) – We have not updated our assessment for this species, as we are currently developing a proposed listing rule.

Dakota skipper (*Hesperia dacotae*) – The following summary is based on information contained in our files, including information from the petition received on May 12, 2003. The Dakota skipper is a small- to mid-sized butterfly that inhabits high-quality tallgrass and mixed grass prairie in Minnesota, North Dakota, South Dakota, and the provinces of Manitoba and Saskatchewan in Canada. The species is presumed to be extirpated from Iowa and Illinois and from many sites within occupied States.

The species is threatened by conversion of its native prairie habitat for agricultural purposes, overgrazing, invasive species, gravel mining, inbreeding, population isolation, and, in some cases, prescribed fire. Prairie succeeds to shrubland or forest without

periodic fire, grazing, or mowing; thus, the species is also threatened at sites where such management practices are not applied. We, other agencies, and private organizations (e.g., The Nature Conservancy) protect and manage some Dakota skipper sites. Although proper management is always necessary to ensure its persistence, even at protected sites, it is secure at some sites owned by these entities. The species is also secure at some sites where private landowners manage native prairie in ways that conserve Dakota skipper. Despite these protections, recent surveys in at least parts of the species' range have led us to view threats to Dakota skipper as being more imminent than we previously believed. In January 2007, for example, Minnesota Department of Natural Resources proposed (although, it did not finalize) revising the status of Dakota skipper in the state from threatened to endangered because it ''appears to be rapidly disappearing from remnant habitat.'' In addition, approximately half of the inhabited sites are privately owned with little or no protection. Ongoing threats on these sites include invasive species, overgrazing, and herbicide applications. A few private sites are protected from conversion by easements, but these do not prevent adverse effects from overgrazing. Overall, the threats are moderate in magnitude because they are not occurring rangewide. They are, however, ongoing and therefore imminent, particularly on private lands. We assigned an LPN of 8 to this species.

Mardon skipper (*Polites mardon*) – See above in ''*Summary of Listing Priority Changes in Candidates*.'' The above summary is based on information contained in our files and the petition we received on December 24, 2002.

Coral Pink Sand Dunes tiger beetle (*Cicindela limbata albissima*) – See above in ''*Summary of Listing Priority Changes in Candidates*.'' The above summary is based on information contained in our files, including information from the petition we received on April 21, 1994.

Highlands tiger beetle (*Cicindela highlandensis*) – The following summary is based on information contained in our files. No new information was provided in the petition we received on May 11, 2004. The Highlands tiger beetle is narrowly distributed and restricted to areas of bare sand within upland oak scrub and pine vegetation on ancient sand dunes of the Lake Wales Ridge in Polk and Highlands Counties, Florida. Adult tiger beetles have been found at 40 sites from near Haines City south to Josephine Creek. In 2004–2005 surveys, a total of 1,574 adults were found at 40 sites, compared with 643 adults at 31 sites in 1996, 928 adults at 31 sites in 1995, and 742 adults at 21 sites in 1993. Of the 40 sites in the 2004–2005 surveys with one or more adults, results ranged from 3 sites with large populations of over 100 adults, to 13 sites with fewer than 10 adults. Results from a limited removal study at four sites suggest that the actual population size at the various survey sites is likely to be as much as two times as high as indicated by the visual index counts.

Lack of fire to create open sand, pesticide use, small population sizes, and over-collecting pose serious threats to this species. Because this species is narrowly distributed with specific habitat requirements and small populations, any of the threats could have a significant impact on the survival of the species. Therefore, the magnitude of threats is high. Although the majority of its historic range has been lost, degraded, and fragmented, numerous sites are protected and land managers are implementing prescribed fire, which are expected to restore habitat and help reduce threats and have already helped stabilize and somewhat improve the populations. Overall, the threats are nonimminent. Therefore, we assigned the Highlands tiger beetle an LPN of 5.

Arachnids

Warton cave meshweaver (*Cicurina wartoni*) – The following summary is based on information contained in our files. No new information was provided in the petition received on May 11, 2004. Warton Cave meshweaver is an eyeless, cave-dwelling, unpigmented, 0.25 inch long invertebrate known only from female specimens. This meshweaver is known to occur in only one cave, Pickle Pit, in Travis County, Texas. Primary threats to the species and its habitat are predation and competition from fire ants, surface and subsurface effects from runoff from an adjacent subdivision, unauthorized entry into the area surrounding the cave, modification of vegetation near the cave from human use, and trash dumping which may include toxic materials near the feature. The magnitude of threats is high because the single location for this species makes it highly vulnerable to extinction from the identified threats. The threats are imminent because fire ants are known to occur in the vicinity of the cave, and impacts to the cave from runoff and human activities are an imminent threat. Thus, we assign an LPN of 2 to this species.

Crustaceans

Anchialine pool shrimp (*Metabetaeus lohena*) – The following summary is based on information contained in our files. No new information was provided in the petition we received on May 11, 2004. *Metabetaeus lohena* is an anchialine pool-inhabiting species of shrimp belonging to the family Alpheidae. This species is endemic to the Hawaiian Islands and is currently known from populations on the islands of Oahu, Maui, and Hawaii. The primary threats to this species are predation by fish (which do not naturally occur in the pools inhabited by this species) and habitat loss from degradation. The pools where this species occurs on the islands of Maui and Hawaii are located within State Natural Area Reserves (NAR). Hawaii's State statutes prohibit the collection of the species and the disturbance of the pools in State NARs. However, enforcement of collection and disturbance prohibitions is difficult, and the negative effects from the introduction of fish are extensive and happen quickly. In addition, the pools where this species occurs on the island of Oahu do not receive protection from collection of the species or disturbance of the pools. Therefore, threats to this species have a significant adverse effect on the survival of the species, and are of a high magnitude. However, the primary threats of predation from fish and loss of habitat due to degradation are nonimminent overall, because on the islands of Maui and Hawaii no fish were observed in any of the pools where this species occurs and there has been no documented dumping in these pools. Only one site on Oahu had a dumping instance, and in that case the dumping was cleaned up immediately and the species subsequently observed. No additional dumping events are known to have occurred. Therefore, we assigned this species an LPN of 5.

Anchialine pool shrimp (*Palaemonella burnsi*) – The following summary is based on information contained in our files. No new information was provided in the petition we received on May 11, 2004. *Palaemonella burnsi* is an anchialine pool-inhabiting species of shrimp belonging to the family Palaemonidae. This species is endemic to the Hawaiian Islands and is currently known from three populations on the island of Maui and one population on the island of Hawaii. The primary threats to this species are predation by fish (which do not naturally occur in the pools inhabited by this species) and habitat loss due to degradation. The pools

where this species occurs on Maui are located within a State Natural Area Reserve (NAR). Hawaii's State statutes prohibit the collection of the species and the disturbance of the pools in State NARs. On the island of Hawaii, the species occurs within a National Park, and collection and disturbance are also prohibited. However, enforcement of these prohibitions is difficult, and the negative effects from the introduction of fish are extensive and happen quickly. Therefore, threats to this species have a significant adverse effect on the survival of the species, and are of a high magnitude. However, the threats are nonimminent, because surveys in 2004 and 2007 did not find fish in the pools where these shrimp occur on Maui or the island of Hawaii. Also, there was no evidence of recent habitat degradation at those pools. We assigned this species an LPN of 5.

Anchialine pool shrimp (*Procaris hawaiana*) – The following summary is based on information contained in our files. No new information was provided in the petition we received on May 11, 2004. *Procaris hawaiana* is an anchialine pool-inhabiting species of shrimp belonging to the family Procarididae. This species is endemic to the Hawaiian Islands, and is currently known from two populations on the island of Maui and one population on the island of Hawaii. The primary threats to this species are predation from fish (which do not naturally occur in the pools inhabited by this species) and habitat loss due to degradation. The pools where this species occurs on Maui are located within a State Natural Area Reserve (NAR). Hawaii's State statutes prohibit the collection of the species and the disturbance of the pools in State NARs. However, enforcement of these prohibitions is difficult and the negative effects from the introduction of fish are extensive and happen quickly. In addition, there are no conservation efforts underway to alleviate the potential for any of these threats in the one pool on the island of Hawaii. Therefore, threats to this species have a significant adverse effect on the survival of the species, and thus remain at a high magnitude. However, the threats to the species are nonimminent because, during 2004 and 2007 surveys, no fish were observed in the pools where these shrimp occur on Maui, and no fish were observed in the one pool on the island of Hawaii during a site visit in 2005. In addition, there were no signs of dumping or fill in any of the pools where the species occurs. Therefore, we assigned this species an LPN of 5.

Anchialine pool shrimp (*Vetericaris chaceorum*) – The following summary is based on information contained in our files. No new information was provided in the petition we received on May 11, 2004. *Vetericaris chaceorum* is an anchialine pool-inhabiting species of shrimp belonging to the family Procarididae; it is the only species in its genus. This species is endemic to the Hawaiian Islands, and is only known from one population in a single pool on the island of Hawaii. The primary threats to this species are predation from nonnative fish and habitat degradation and contamination from illegal trash dumping. This species would be highly vulnerable to predation by any intentionally or accidentally introduced fish, or contamination from illegal dumping into its single known location. This pool lies within lands administered by the State of Hawaii Department of Hawaiian Home Lands. The threats to *V. chaceorum* from habitat degradation and destruction, as well as from predation by nonnative fish are of high magnitude, because this species occurs in only one pool; thus the threats could significantly impair the survival of the species. All individuals of this species may be adversely impacted by a single dumping of trash or release of nonnative fish in its only known pool. However, the threats are nonimminent, as fish have not been introduced into the pool (nor is there any reason to believe that introduction is imminent) and a site visit in early 2005 showed there were no signs of dumping or fill. Therefore we assigned this species an LPN of 4 because the threats are of high magnitude but nonimminent, and the species is in a monotypic genus.

Troglobitic groundwater shrimp (*Typhlatya monae*) – The following summary is based on information contained in our files including information from the petition we received on May 11, 2004. The troglobitic groundwater shrimp is a subterranean small shrimp known from Puerto Rico, Barbuda, and Dominican Republic. It is classified as a troglobite, or obligatory cave organism, of which its most extraordinary feature is the reduction or loss of vision and pigmentation. Members of the species feed on organic waste material and debris, such as bat guano. Little is known concerning the status of the species in either Barbuda or Dominican Republic. Although in Puerto Rico this species was previously found at Mona Island, currently it is known from only three caves within the Guanica Commonwealth Forest in the municipalities of Guanica, Yauco, and Guayanilla. However, the species may still be found in the reef deposit aquifers in Mona Island that have not yet been surveyed. In 1995, close to 2,000 individuals were estimated; over 95% of these were observed in only one cave. Although no systematic censuses have been conducted since 1995, the Service recently documented the presence of the species in all three caves and obtained information from Puerto Rico Commonwealth Forest personnel regarding another cave in which the species may occur.

Changes in groundwater quality, collection of rare animals, predation, limited distribution of the species, limited availability of appropriate habitat (i.e., underground aquifers within cave formations), potential reduction of food sources (e.g., mortality or reduction in bat populations), and low population numbers, potentially threaten populations of the troglobitic groundwater shrimp. However, because the known range of the species is within protected lands, and based on available information of known management activities within the Guanica Commonwealth Forest or Mona Island, the magnitude of the remaining threats, possible extraction of ground-water in Mona and vulnerability to catastrophic events, is moderate to low. The threats are not currently occurring, and therefore are nonimminent. We continue to assign a LPN of 11 to this species.

Flowering plants

Abronia alpina (Ramshaw Meadows sand-verbena) – The following summary is based on information contained in our files. No new information was provided in the petition we received on May 11, 2004. *Abronia alpina* is a small perennial herb, 2.5 to 15.2 centimeters (1 to 6 inches) across, forming compact mats with lavender-pink, trumpet-shaped, and generally fragment flowers. *Abronia alpina* is known from one main population center in Ramshaw Meadow on the Kern Plateau of the Sierra Nevada, California and from one subpopulation found in adjacent Templeton Meadow. The total estimated area occupied is approximately 6 hectares (15 acres). The population fluctuates from year to year without any clear trends. Population estimates from 1985-1994 range from a low of 69,652 plants in 1986 to 132,215 plants in 1987. Surveys conducted since 1994 indicate that no significant changes have occurred in population size or location, although the 2003 survey showed population numbers to be at the low end of the range. The population was last monitored in 2007.

The factors threatening *Abronia alpina* include natural and human alteration of habitat, hydrologic changes to the water table, and recreational use within meadow habitats. Lodgepole pine encroachment has altered the meadow and trees are becoming established within *A. alpina* habitat. Lodgepole pine encroachment may alter soil characteristics by increasing organic matter levels, decreasing porosity, and moderating diurnal temperature fluctuations thus reducing the competitive ability of *A. alpina* to persist in an environment more hospitable to other plant species. The Ramshaw Meadow ecosystem is subject to potential alteration by lowering of the water table due to downcutting of the South Fork of the Kern River (SFKR). The SFKR flows through Ramshaw Meadow, at times coming within 15 m (50 ft) of *A. alpina* habitat, particularly in the vicinity of five subpopulations. The habitat occupied by *A. alpina* directly borders the meadow system supported by the SFKR. Drying out of the meadow system could potentially affect *A. alpina* pollinators and/or seed dispersal agents. Established hiker, packstock, and cattle trails pass through A. *alpina* subpopulations. Two main hiker trails pass through Ramshaw Meadow, but were rerouted out of *A. alpina* subpopulations where feasible, in 1988 and 1997. Remnants of cattle trails that pass through subpopulations in several places receive occasional incidental use by horses and sometimes hikers. Cattle use, however, currently, is not a threat due to the 2001 implementation of a ten year moratorium on the Templeton allotment which prohibits cattle from all *A. alpina* locations. The Service is funding studies to determine appropriate conservation measures and working with the U.S. Forest Service on developing a conservation strategy for the species. The threats are of a low magnitude and nonimminent because of the conservation actions already implemented. Therefore, we assigned a LPN of 11 to this species.

Arabis georgiana (Georgia rockcress) – The following summary is based on information in our files. No new information was provided in the petition we received on May 11, 2004. The Georgia rockcress grows in a variety of dry situations, including shallow soil accumulations on rocky bluffs, ecotones of gently sloping rock outcrops, and in sandy loam along eroding river banks. It is occasionally found in adjacent mesic woods, but it will not persist in heavily shaded conditions. Currently, approximately 20 populations are known from the Gulf Coastal Plain, Piedmont, and Ridge and Valley physiographic provinces of Alabama and Georgia. Populations of this species typically have a limited number of individuals over a small area. Habitat degradation, more than outright habitat destruction, is the most serious threat to the continued existence of this species. Disturbance, associated with timber harvesting, road building, and grazing has created favorable conditions for the invasion of exotic weeds, especially Japanese honeysuckle (*Lonicera japonica*), in this species' habitat. A large number of the populations are currently or potentially threatened by the presence of exotics. The heritage programs in Alabama and Georgia have initiated plans for exotic control at several populations. The magnitude of threats to this species is considered to be moderate to low due to the number of populations (20) across multiple counties in two states and due to the fact that several sites are protected. However, since a number of the populations are currently being affected by nonnative plants, the threat is imminent. Thus, we assigned an LPN of 8 to this species.

Argythamnia blodgettii (Blodgett's silverbush) – The following summary is based on information in our files. No new information was provided in the petition we received on May 11, 2004. Blodgett's silverbush occurs in Florida and is found in open, sunny areas in pine rockland, edges of rockland hammock, edges of coastal berm, and sometimes disturbed areas at the edges of natural areas. Plants can be found growing from crevices on limestone, or on sand. The pine rockland habitat where the species occurs in Miami-Dade County and the Florida Keys requires periodic fires to maintain habitat with a minimum amount of hardwoods. There are approximately 27 extant occurrences, 12 in Monroe County and 15 in Miami-Dade County; many occurrences are on conservation lands. However, 4–5 sites are recently thought to be extirpated. The estimated population size of Blodgett's silverbush in the Florida Keys, excluding Big Pine Key, is roughly 11,000; the estimated population in Miami-Dade County is 375 to 13,650 plants.

Blodgett's silverbush is threatened by habitat loss, which is exacerbated by habitat degradation due to fire suppression, the difficulty of applying prescribed fire to pine rocklands, and threats from exotic plants. Remaining habitats are fragmented. Threats such as road maintenance and enhancement, infrastructure, and illegal dumping threaten some populations. Blodgett's silverbush is vulnerable to natural disturbances, such as hurricanes, tropical storms, and storm surges. Climatic change, particularly sea level rise, is a long-term threat that is expected to continue to affect pine rocklands and ultimately reduce the extent of available habitat, especially in the Keys. Overall, the magnitude of threats is moderate because not all of the populations are affected by the threats and the species has a relatively large population size. In addition, land managers are aware of the threats from exotic plants and lack of fire, and are, to some extent, working to reduce this threat where possible. While some of the threats are occurring in some areas, the threat from development is nonimminent since most of the populations are on public land and sea-level rise is not currently affecting this species. Overall, the threats are nonimminent. Thus, we assigned an LPN of 11 to this species.

Artemisia campestris var. *wormskioldii* (Northern wormwood) – The following summary is based on information contained in our files. No new information was provided in the petition we received on May 11, 2004. Historically known from eight sites, northern wormwood is currently known from two populations in Klickitat and Grant Counties, Washington. This plant is restricted to exposed basalt, cobbly-sandy terraces, and sand habitat along the shore and on islands in the Columbia River. The two sites are separated by 200 miles (322 kilometers) of the Columbia River and three large hydroelectric dams. The Klickitat County population is declining; the status is unclear for the Grant County population; however, both are vulnerable to environmental variability. Surveys have not detected any additional plants.

Threats to northern wormwood include direct loss of habitat through regulation of water levels in the Columbia River and placement of riprap along the river bank; trampling of plants as a result of recreational use; competition with nonnative invasive species; burial by wind and water-borne sediments; small population sizes; susceptibility to genetic drift and inbreeding; and the potential for hybridization with two other species of *Artemisia*. Ongoing conservation actions have reduced trampling, but have not eliminated or reduced the other threats at the Grant County site. The magnitude of threat is high for this subspecies because the only two remaining populations are widely separated and distributed such that one or both populations could be eliminated by a

single disturbance. The threats are imminent because recreational use is ongoing, invasive nonnative species occur at both sites, erosion of the substrate is ongoing at the Klickitat County site, and high water flows are random, naturally occurring events that may occur unpredictably in any year. Therefore, we have retained an LPN of 3 for this subspecies.

Astragalus tortipes (Sleeping Ute milkvetch) – The following summary is based on information contained in our files. No new information was provided in the petition we received on May 11, 2004. Sleeping Ute milkvetch is a perennial plant that grows only on the Smokey Hills layer of the Mancos Shale Formation on the Ute Mountain Ute Indian Reservation in Montezuma County, Colorado. In 2000, 3,744 plants were recorded at 24 locations covering 500 acres within an overall range of 64,000 acres. Available information from 2000 indicates that the species remains stable. Previous and ongoing threats from borrow pit excavation, off-highway vehicles, irrigation canal construction, and a prairie dog colony have had minor impacts that reduced the range and number of plants by small amounts. Off-highway vehicle use of the habitat is reportedly increasing. Oil and gas development is active in the general area, but the Service has received no information from the Tribe to indicate whether there is development within the habitat for the plants. The Tribe reported this year that the status of the species remains unchanged, and that a management plan for the species is currently in draft form. The threats are moderate in magnitude, since they have had minor impacts and, based on information we have, the population appears to be stable. While ORV use is currently occurring at a rate that causes minor impacts and may be increasing, oil and gas production is not known to currently occur in the areas where this species exists. Overall, we conclude threats are nonimminent. Therefore, we assigned an LPN of 11 to this species.

Bidens amplectens (Kookooalu) – We have not updated our assessment for this species, as we are currently developing a proposed listing rule.

Bidens campylotheca ssp. *pentamera* (Kookooalu) – The following summary is based on information contained in our files. No new information was provided in the petition we received on May 11, 2004. This subspecies is an erect, perennial herb found in *Cheirodendron-Metrosideros* (olapa-ohia) montane wet forest on Maui, Hawaii. This subspecies is known from four populations with a total of approximately 180 individuals. *Bidens campylotheca* ssp. *pentamera* is threatened by feral pigs that degrade and destroy habitat, and by nonnative plants that compete for habitat. Feral pigs have been fenced out of one population at Kipahulu. These ongoing conservation efforts (fencing and nonnative plant removal) benefit only one of the four known populations as the remaining populations on east and west Maui are still affected by these threats. Habitat destruction and nonnative plants continue to be high-magnitude threats, because they threaten the continued existence of this subspecies. In addition, threats to *B. campylotheca* ssp. *pentamera* are imminent because they are ongoing in three populations. Therefore, we retained an LPN of 3 for this subspecies.

Bidens campylotheca ssp. *waihoiensis* (Kookooalu) – The following summary is based on information contained in our files. No new information was provided in the petition we received on May 11, 2004. *Bidens campylotheca* ssp. *waihoiensis* is an erect, perennial herb found in wet *Acacia-Metrosideros* (koa-ohia) forest on Maui, Hawaii. *Bidens campylotheca* ssp. *waihoiensis* is known from two populations, totaling 300 to 350 individuals. It is threatened by feral pigs and cattle, which eat this plant and degrade and destroy habitat, and by nonnative plants that outcompete and displace it. Conservation measures such as strategic fences and control of nonnative plants benefit the plants in Kipahulu Valley; however, the individuals in Waihoi Valley are still affected by these threats. Since foraging and habitat destruction result in direct mortality, they pose a high-magnitude threat to the small populations. They are also a imminent threat because they are ongoing in the Wahoi Valley. Therefore, we retained an LPN of 3 for this subspecies.

Bidens conjuncta (Kookooalu) – The following summary is based on information in our files. No new information was provided in the petition we received on May 11, 2004. *Bidens conjuncta* is an erect, perennial herb found in *Metrosideros-Dicranopteris-Cheirodendron* (ohia-uluhe-olapa) lowland to montane wet forest and shrubland on Maui, Hawaii. Eight populations are known, totaling fewer than 3,000 individuals, scattered throughout upper elevation drainages of west Maui. Although the overall range of the species has not changed, the number of individuals has declined over the last decade or so. This species is threatened by pigs that degrade and destroy habitat, and eat vegetative parts and fruit of *B. conjuncta*, and by nonnative plants that outcompete and displace it. Feral pigs have been fenced out of the lower elevation populations in the west Maui mountains and in the summit areas and nonnative plants have been greatly reduced in the fenced areas. Because these conservation efforts have alleviated the threats in several portions of the range, the magnitude of the threats are moderate. However, these threats are imminent because they are still ongoing in portions of this species range. Therefore, we retained an LPN of 8 for this species.

Bidens micrantha ssp. *ctenophylla* (Kookooalu) – The following summary is based on information contained in our files. No new information was provided in the petition we received on May 11, 2004. This subspecies is an erect, perennial herb found in open mixed shrubland to dry *Metrosideros* (ohia) forest on the island of Hawaii, Hawaii. This subspecies is endemic to the island of Hawaii, where it is restricted to an area of less than 10 square miles (26 square kilometers). *Bidens micrantha* ssp. *ctenophylla* is known from four wild and four outplanted populations totaling approximately 130 to 140 individuals, the majority of which occur in only two (wild) populations. This subspecies is threatened by fire and nonnative plants, and two populations are threatened by residential and commercial development. The threats to B. *micrantha* ssp. *ctenophylla* from fire and nonnative plants are of a high magnitude and imminent because they are occurring range-wide, they threaten the continued existence of the species, and no efforts for their control have been undertaken. In addition, two populations are also threatened by development. Therefore, we retained an LPN of 3 for this subspecies.

Brickellia mosieri (Florida brickell-bush) – The following summary is based on information contained in our files. No new information was provided in the petition we received on May 11, 2004. This species is restricted to pine rocklands of Miami-Dade County, Florida. This habitat requires periodic prescribed fires to maintain the low understory and prevent encroachment by native tropical hardwoods and exotic plants, such as Brazilian pepper. Only one large population is known to exist, plus 18 other occurrences each containing less than 100 individuals. Ten of these occurrences are on conservation lands. This species is threatened by habitat loss, which is exacerbated by habitat degradation due to fire suppression, the difficulty of applying prescribed fire to pine rocklands, and threats from exotic plants. Remaining habitats are

fragmented. The species is vulnerable to natural disturbances, such as hurricanes, tropical storms, and storm surges. Due to its restricted range and the small sizes of most isolated occurrences, this species is vulnerable to environmental (catastrophic hurricanes), demographic (potential episodes of poor reproduction), and genetic (potential inbreeding depression) threats. Ongoing conservation efforts includes a project aimed at facilitating restoration and management of privately owned pine rockland habitats in Miami-Dade County, and a project funded in 2008 to restore suitable habitat and reintroduce and establish new populations of the plants in pine rocklands. The Service is also pursuing additional habitat restoration projects, which could help further improve the status of the species. Because of these efforts, the overall magnitude of threats is moderate. The threats are ongoing and thus imminent. We assigned this species an LPN of 8.

Calamagrostis expansa (Maui reedgrass) – The following summary is based on information contained in our files. No new information was provided in the petition we received on May 11, 2004. This species is a robust, short-rhizomatous perennial found in wet forest, open bogs, and bog margins on the islands of Maui and Hawaii, Hawaii. Historically rare, *C. expansa* was restricted to wet forest and bogs on Maui. Its historical status is unknown on Hawaii. Currently, this species is known from 11 populations totaling approximately 230 individuals on Maui, and was recently discovered in eight populations totaling approximately 350 individuals on the island of Hawaii. *Calamagrostis expansa* is threatened by pigs that degrade and destroy habitat and by nonnative plants that outcompete and displace it. Feral pigs have been fenced out of most of the west Maui populations, and nonnative plants have been reduced in the fenced areas. However, the threats are not controlled and are ongoing in the remaining unfenced populations on Maui and at all of the populations on the island of Hawaii. Therefore, overall the threats from feral pigs and nonnative plants are of a high magnitude and imminent for *C. expansa*, and we retained an LPN of 2 for this species.

Calamagrostis hillebrandii (Hillebrand's reedgrass) – The following summary is based on information contained in our files. No new information was provided in the petition we received on May 11, 2004. *Calamagrostis hillebrandii* is a slender, short-rhizomatous perennial found in *Metrosideros-Machaerina* (ohia-uki) montane wet bog or *Metrosideros-Rhynchospora-Oreobolus* (ohia-kuolohia-oreobolus) mixed bog on Maui, Hawaii. This species is known from two populations of fewer than 2,000 individuals, restricted to the bogs of west Maui. There is an unconfirmed report of *C. hillebrandii* from central Molokai. This species is currently threatened by pigs that degrade and destroy habitat and nonnative plants that outcompete and displace it. A portion of one population is protected by an ungulate exclosure fence while the other population may indirectly benefit from conservation actions for ungulate control and control of nonnative plants conducted in a nearby preserve. The threats are imminent because they are ongoing in one of the two known populations. Because they threaten the continued existence of the species, the threats are high in magnitude. Therefore, we retained an LPN of 2 for this species.

Calliandra locoensis (no common name) – The following summary is based on information contained in our files. No new information was provided in the petition we received on May 11, 2004. *Calliandra locoensis* is a spiny, leguminous shrub currently known from five localities within the Susua Commonwealth Forest in the municipalities of Yauco and Sabana Grande, in southwestern Puerto Rico. Surveys in 2007 estimated 1,600 adult plants with numerous seedlings. Twenty-five native species of *Calliandra* have been reported for the Antilles, three of which are native to Puerto Rico, including *C. locoensis*. This species is endemic to Puerto Rico, and was discovered in 1991 during a study of the flora of the Susua Commonwealth Forest. It is found on shallow, serpentine soils with low nutrients, high drainage, and low fertility. Much of the vegetation in the forest was cut for wood, cultivation, livestock grazing, and charcoal production, prior to its designation as a public forest. *Calliandra locoensis* exhibits a low degree of self-compatibility in pollination tests. Seeds have short viability period, do not appear to have a biotic dispersal agent (dispersed by dehiscence (natural bursting open)), and require mesic conditions for germination, which may be factors in the species' limited distribution.

The restricted distribution, forest management practices (accidental trampling, brush clearing, trail maintenance), forest fires (natural or manmade), and catastrophic natural events (hurricanes, floods, mudslides), threaten this species. The magnitude of threat to *Calliandra locoensis* is high due to its restricted distribution, which makes it vulnerable to catastrophic events, and apparent low dispersal capability; and the threats are nonimminent given that the populations are found within protected lands and there are no known projects or management activities planned that would destroy the known populations. Therefore, we assigned an LPN of 5 to this species.

Calochortus persistens (Siskiyou mariposa lily) – The following summary is based on information contained in our files and the petition we received on September 10, 2001. The Siskiyou mariposa lily is a narrow endemic that is restricted to three disjunct ridge tops in the Klamath-Siskiyou Range on the California-Oregon border. The southern-most occurrence of this species is comprised of nine separate sites on approximately 10 hectares (ha) (24.7 acres (ac)) of Klamath National Forest and privately owned lands that stretch for 6 kilometers (km) (3.7 miles (mi)) along the Gunsight-Humbug Ridge, Siskiyou County, California. In 2007, a new occurrence was confirmed in the locality of Cottonwood Peak and Little Cottonwood Peak, Siskiyou County. The northern-most occurrence consists of not more than five Siskiyou mariposa lily plants that were discovered in 1998, on Bald Mountain, west of Ashland, Jackson County, Oregon.

Major threats include competition and shading by native and nonnative species fostered by suppression of wild fire; increased fuel loading and subsequent risk of wild fire; fragmentation by roads, fire breaks, tree plantations, and radio-tower facilities; maintenance and construction around radio towers and telephone relay stations located on Gunsight Peak and Mahogany Point; and soil disturbance, direct damage, and exotic weed and grass species introduction as a result of heavy recreational use and construction of fire breaks. Dyer's woad (*Isatis tinctoria*), an invasive, nonnative plant that may prevent germination of Siskiyou mariposa lily seedlings, is now found throughout the southern-most California occurrence, affecting 75 percent of the known lily habitat on Gunsight-Humbug Ridge. Forest Service staff and the Klamath-Siskiyou Wildlands Center cite competition with dyer's woad as a significant and chronic threat to the survival of Siskiyou mariposa lily.

The combination of restricted range, extremely low numbers (five plants) in one of three disjunct populations, poor competitive ability, short seed dispersal distance, slow growth rates, low seed production, apparently poor survival

rates in some years, herbivory, and competition from exotic plants threaten the continued existence of this species. These threats are of high magnitude because of their potential to negatively affect the overall survival of the species. Because the threats from herbivory and competition from exotic plants are not anticipated in the immediate future, and the threats from low seed production and survival are longer-term threats, overall the threats are nonimminent. Therefore, we assigned a listing priority number of 5 to this species.

Calyptranthes estremerae (no common name) – The following summary is based on information contained in our files. No new information was provided in the petition we received on May 11, 2004. *Calyptranthes estremerae* is a small tree from the subtropical moist forest of northwestern Puerto Rico, in the municipalities of Camuy, Utuado, and Arecibo. *Calyptranthes estremerae* was only known from several individuals found near the recreation area adjacent to the Camuy Caves, but specímens were later found within the Rıo Abajo Commonwealth Forest (up to 50 individuals) at a site affected by the construction of Highway PR 10 in 1995. At the present time, a minimum of 100 specimens of *C. estremerae* are estimated for the Rio Abajo Commonwealth Forest and an undetermined number in the Camuy area. The magnitude of threat to *C. estremerae* is high, due to restricted distribution and small number of individuals, and the potential destruction of specimens and habitat from catastrophic natural events and the expansion of recreational facilities. However, these threats are not imminent because the largest known population of *C. estremerae* is found within protected lands, there are no known recreational facility projects planned that would destroy the sites, and the species can be transplanted successfully. Therefore, we assigned an LPN of 5 to *Calyptranthes estremerae*.

Canavalia pubescens (Awikiwiki) – The following summary is based on information contained in our files. No new information was provided in the petition we received on May 11, 2004. Awikiwiki is a perennial climber found in lowland dryland forest on Maui and Lanai, and is possibly on the island of Niihau, Hawaii. This species is known from five populations totaling a little over 200 individuals. This species is threatened by development (Maui), goats (Maui) and axis deer (Maui and Lanai) that degrade and destroy habitat, and by nonnative plants that outcompete and displace native plants (both islands). An ungulate exclosure fence protects six individuals of *C. pubescens*, and weed control is ongoing at this location on Maui. This species is represented in two *ex-situ* collections. Threats to this species from feral goats, axis deer, and nonnative plants are ongoing, or imminent, and of high magnitude because they significantly affect the species throughout its range. Therefore, we retained an LPN of 2 for this species.

Castilleja christii (Christ's paintbrush) – The following summary is based on information contained in our files and the petition we received on January 2, 2001. *Castilleja christii* is found in one population covering approximately 85 ha (220 ac) on the summit of Mount Harrison in Cassia County, Idaho. This endemic species is considered a hemiparasite (dependent on the health of their surrounding native plant community), and it grows in association with subalpine meadow and sagebrush habitats. The population may be large (greater than 10,000 individual plants); however, the species is considered to be subject to large variations in annual abundance and an accurate current population estimate is not available. Monitoring indicates that reproductive stems per plant and plant density declined between 1995 and 2007. The primary threat to the species is the nonnative invasive plant smooth brome (*Bromus inermis*). Despite cooperative Forest Service and Service efforts to control smooth brome in 2005, 2006, and 2007, it still persists and has increased in some *C. christii* habitats. Other threats to *C. christii* from recreational use appear to be mostly seasonal and affect only a small portion of the population, although they too are imminent. The magnitude of the threats to this species is moderate at this time because, although the smooth brome control efforts have not been effective, the Service and Forest Service are continuing their efforts in order to protect this potentially large population of plants. The threat from smooth brome is imminent because the threat still persists at a level that affects the native plant communities that provide habitat for *C. christii.* Thus, we assign an LPN of 8 to this species.

Chamaecrista lineata var. *keyensis* (Big Pine partridge pea) –The following summary is based on information contained in our files. No new information was provided in the petition we received on May 11, 2004. This pea is endemic to the lower Florida Keys, and restricted to pine rocklands and hardwood hammock edges, and roadsides and firebreaks within these ecosystems. Historically, it was known from Big Pine, No Name, Ramrod, and Cudjoe Keys (Monroe County, Florida). In 2005, a small population was detected on lower Sugarloaf Key, but this population was apparently extirpated later in 2005, due to the effects of Hurricane Wilma. It presently occurs on Big Pine Key, plus a very small population found on Cudjoe Key in 2005. It is fairly well distributed in Big Pine Key pine rocklands, which encompass approximately 580 hectares (1,433 acres), approximately 360 hectares (890 acres) of which are within the Service's National Key Deer Refuge (NKDR). Over 80% of the population probably exists on NKDR, with the remainder distributed among State, County, and private properties.

Hurricane Wilma (October 2005) resulted in a storm surge that covered most of Big Pine Key with sea water. In plots sampled after Wilma, frequency of occurrence was less than a third and density was less than half that found in plots sampled before Wilma.

Pine rockland communities are maintained by relatively frequent fires. In the absence of fire, shrubs and trees encroach on pine rockland and the subspecies is eventually shaded out. NKDR has a prescribed fire program, although with many constraints on implementation. Habitat loss due to development was historically the greatest threat to the pea. Much of the remaining habitat is now protected on public lands. Absence of fire now appears to be the greatest of the deterministic threats. Given the recent increase in hurricane activity, storm surges are the greatest of the stochastic threats. The small range and patchy distribution of the subspecies increases risk from stochastic events. Additional threats include sea level rise, restricted range, invasive exotic plants, roadside dumping, loss of pollinators, seed predators, and development. The above description of threats also apply to *Chamaesyce deltoidea* ssp. *serpyllum, below*.

We maintain the previous assessment that hurricane storm surges, lack of fire, and limited distribution results in a moderate magnitude of threat because a large part of the range is on conservation lands wherein threats are being controlled although fire management is at much slower rate than is required. The immediacy of hurricane threats is difficult to characterize. Sea level rise remains uncontrolled, but is nonimminent regarding most of the habitat area or population on an annual basis. Overall, the threats from limited distribution and inadequate fire management are imminent since they

are ongoing. Therefore, we retained an LPN of 9 for Big Pine partridge pea.

Chamaesyce deltoidea pinetorum (Pineland sandmat) – The following summary is based on information contained in our files. No new information was provided in the petition we received on May 11, 2004. The pineland sandmat in only known from Miami-Dade County, Florida. The largest occurrence, estimated at more than 10,000 plants, is located on Long Pine Key within Everglades National Park. All other occurrences are smaller and are in isolated pine rockland fragments in heavily urbanized Miami-Dade County. Occurrences on private lands and on one county-owned parcel are at risk from development and habitat degradation and fragmentation. All occurrences of the species are threatened by habitat loss and degradation due to fire suppression, the difficulty of applying prescribed fire, and exotic plants. These threats are severe within small and unmanaged fragments in urban areas. However, the threats of fire suppression and exotics are reduced on lands managed by the National Park Service. Another threat is hydrology changes. Hydrology has been altered within Long Pine Key due to artificial drainage, which lowered ground water, and construction of roads, which either impounded or diverted water. Regional water management intended to restore the Everglades could negatively affect the pinelands of Long Pine Key. At this time, we do not know whether the proposed restoration and associated hydrological modifications will have a positive or negative effect on pineland sandmat. This narrow endemic may be vulnerable to catastrophic events and natural disturbances, such as hurricanes. Conditions related to climate change, particularly sea level rise, may be a factor over the long-term. Overall, the magnitude of threats to this species is moderate, since by applying regular prescribed fire, the National Park Service has kept Long Pine Key's pineland vegetation intact and relatively free of exotic plants, and the extent to which proposed restoration will negatively affect this subspecies are unclear. Overall, the threats are nonimminent since fire management is regularly conducted, and sea level rise and hurricanes are longer-term threats. Therefore, we assigned a LPN of 12 to this subspecies.

Chamaesyce deltoidea ssp. *serpyllum* (Wedge spurge) – The following summary is based on information contained in our files. No new information was provided in the petition we received on May 11, 2004. The most recent surveys were conducted in 2005. Additional surveys were initiated in 2008. Wedge spurge is a small prostrate herb. It was historically, and remains, restricted to pine rocklands on Big Pine Key in Monroe County, Florida. Pine rocklands encompass approximately 580 hectares (1,433 acres) on Big Pine Key, approximately 360 hectares (890 acres) of which are within the Service's National Key Deer Refuge (NKDR). Most of the species' range falls within the NKDR, with the remainder on State, County, and private properties. It is not widely dispersed within the limited range. Occurrences are sparser in the southern portion of Big Pine Key, which contains smaller areas of NKDR lands than does the northern portion. Wedge spurge inhabits sites with low woody cover (e.g., low palm and hardwood densities) and usually, exposed rock or gravel. See description of threats above under *Chamaecrista lineata* var. *keyensis*

We maintain the previous assessment that low fire return intervals plus hurricane-related storm surges, in combination with a limited, fragmented distribution and threats from sea level rise, results in a moderate magnitude of threat, in part, because a large part of the range is on conservation lands wherein threats can be substantially controlled. The immediacy of hurricane threats is difficult to categorize. Sea level rise remains uncontrolled, but over much of the range is nonimminent compared to other prominent threats. Threats resulting from limited fire occurrences are imminent. Since major threats are ongoing, overall, the threats are imminent. Therefore, we retained an LPN of 9 for this subspecies.

Chorizanthe parryi var. *fernandina* (San Fernando Valley spineflower) – The following summary is based on information contained in our files and the petition we received on December 14, 1999. *Chorizanthe parryi* var. *fernandina* is a low growing herbaceous annual plant in the buckwheat family. The plant currently is known from two disjunct localities in southern California: the first is in the southeastern portion of Ventura County on a site within the Upper Las Virgenes Canyon Open Space Preserve, formerly known as Ahmanson Ranch, and the second is in an area of southwestern Los Angeles County known as Newhall Ranch. Investigations of historical locations and seemingly suitable habitat within the range of the species have not revealed any other occurrences.

The threats currently facing San Fernando Valley spineflower include threatened destruction, modification, or curtailment of its habitat or range, and other natural or manmade factors. One of the two populations (Upper Las Virgenes Canyon Open Space Preserve) is in permanent, public ownership and is being managed by an agency that is working to conserve the plant; however, the use of adjacent habitat for filming movies has recently been brought to our attention; the potential impacts to *C. parryi* var. *fernandina* have not yet been evaluated. We will be working with the landowners to manage the site for the benefit of *C. parryi* var. *fernandina*. The other population (Newhall Ranch) is under the threat of development; however, a Candidate Conservation Agreement (CCA) is being developed with the landowner, and it is possible that the remaining plants can also be conserved. Until such an agreement is finalized, the threat of development and the potential damage to the Newhall Ranch population still exists, as shown by the destruction of some plants during installation of an agave farm. Furthermore, cattle grazing on Newhall Ranch may be a current threat. Cattle grazing may harm *C. parryi* var. *fernandina* by trampling and soil compaction. Grazing activity could also alter the nutrient content of the soils through fecal inputs, which in turn may favor the growth of other plant species that would otherwise not grow so readily on the mineral-based soils. Over time, changes in species composition may render the sites less favorable for the persistence of *C. parryi* var. *fernandina*. Invasive nonnative plants, including grasses, could potentially displace it from available habitat; compete for light, water, and nutrients; and reduce survival and establishment.

Chorizanthe parryi var. *fernandina* is particularly vulnerable to extinction due to its concentration in two isolated areas. The existence of only two areas of occurrence, and a relatively small range, makes it highly susceptible to extinction or extirpation from a large part of its range due to possible development and/or other habitat modification, or random events such as fire, drought, erosion, or other occurrences. We retained an LPN of 6 for *C. parryi* var. *fernandina* due to a high magnitude of nonimminent threats.

Chromolaena frustrata (Cape Sable thoroughwort) – The following summary is based on information contained in our files. No new information was provided in the petition we received on May 11, 2004. This species is found most commonly in open sun to partial shade at the edges of rockland tropical hammock and in coastal rock barrens. There are nine extant occurrences located at five islands in the Florida Keys and two

locations within Everglades National Park (ENP). The plant has been extirpated from half of the islands where it occurred. Prior to Hurricane Wilma in 2005, the population was estimated at roughly 5,000 individuals, with all but 500 occurring on one privately owned island. More recently, an estimate of 1,500 plants was given for areas within ENP.

This species is threatened by habitat loss and modification, even on public lands, and habitat loss and degradation due to threats from exotic plants at almost all sites. The species is vulnerable to natural disturbances, such as hurricanes, tropical storms, and storm surges. While these factors may also work to maintain coastal rock barren habitat in the long-term, Hurricane Wilma appeared to have had severe impacts, at least in the short-term. Occurrences probably declined due to inundation of its coastal barren and rockland hammock habitats in the short-term; long-term effects on this species are unknown. Sea level rise is considered a major threat that will continue. Potential effects from other changes in fresh water deliveries and the construction of the Buttonwood Canal are unknown. Problems associated with small population size and isolation are likely major factors, as occurrences may not be large enough to be viable; this narrowly endemic plant has uncertain viability at most locations, especially following Hurricane Wilma. Thus, these factors constitute a high magnitude of threat. The threats of small population size, isolation, and uncertain viability are imminent because they are ongoing. As a result, we assigned an LPN of 2 to this species.

Consolea corallicola (Florida semaphore cactus) – The following summary is based on information in our files. No new information was provided in the petition we received on May 11, 2004. The Florida semaphore cactus is endemic to the Florida Keys, and was discovered on Big Pine Key in 1919, but that population was extirpated as a result of road building and poaching. This cactus grows close to salt water on bare rock with a minimum of humus soil cover in or along the edges of hammocks near sea level. The species is known to occur naturally only in two areas, Swan Key within Biscayne National Park and Little Torch Key. Outplantings have been attempted in several locations in the upper and lower Keys; however, success has been low. Few plants remain in the population at The Nature Conservancy's Torchwood Hammock Preserve on Little Torch Key. During monitoring work conducted in 2005, a total of 655 plants were documented at the Swan Key population. The cactus does not propagate sexually, and asexual reproduction is the main life history strategy of this species. Recent genetic studies have shown no variation within populations and very limited variation between populations. Findings support the conclusion that the Swan Key (upper Keys), Little Torch Key, and Big Pine Key (outplanting; lower Keys) populations are clonally derived and genetically distinct from each other. Studies examining the reproductive biology of the species indicate that all extant wild and cultivated plants are male.

The causes for the population decline of this species include destruction or modification of habitat, predation from nonnative *Cactoblastis cactorum* moths and disease, poaching and vandalism, sea level rise, and hurricanes. Because of low population numbers, lack of variation between and within populations, and reproductive problems, the threats are of high magnitude. The numerous threats are ongoing and therefore, are imminent. Thus, we assigned this species an LPN of 2.

Cordia rupicola (no common name) – The following summary is based on information contained in our files. No new information was provided in the petition we received on May 11, 2004. *Cordia rupicola*, a small shrub, has been described from southwestern Puerto Rico (Penuelas and Guanica), Vieques Island, and Anegada Island (British Virgin Islands). All four sites lay within the subtropical dry forest life zone overlying a limestone substrate. *Cordia rupicola* has a restricted distribution in the subtropical dry forest of southwestern Puerto Rico and Vieques Island. Currently, approximately 226 individuals are known from 3 locations: Penuelas and Guanica Commonwealth Forests and Vieques National Wildlife Refuge. Additionally, the species is reported as common on Anegada Island.

However, the species is threatened by residential and commercial development on Anegada Island and is also vulnerable to natural (e.g., hurricanes) or manmade (e.g., human-induced fires) threats throughout most of its range. All of these threats have a significant effect on the survival of the species. For these reasons, the magnitude of the current threats is high. Additionally, all sites are located in xeric environment vulnerable to human-induced fires. Only a few individuals are located in protected lands managed for conservation by the Puerto Rico Department of Natural and Environmental Resources or the Service. The population of *C. rupicola* on Anegada Island is currently in good standing. The threats this species faces are ones that will arise in the future if conservation measures are not implemented and long-term impacts are not averted. For these reasons, threats to the species as a whole are nonimminent. Therefore, we assigned an LPN of 5 to this species.

Cyanea asplenifolia (Haha) – The following summary is based on information contained in our files. No new information was provided in the petition we received on May 11, 2004. *Cyanea asplenifolia* is a shrub found in *Acacia-Metrosideros* (koa-ohia) forest on Maui, Hawaii. Currently, this species is known from eight populations totaling fewer than 145 individuals. *Cyanea asplenifolia* is threatened by pigs, goats, and cattle that degrade and destroy habitat and by nonnative plants, such as Australian tree fern, that outcompete and displace it. This species is likely threatened by predation by axis deer and by feral ungulates, rats, and slugs that may directly prey upon and defoliate individuals. Pig and goat exclusion fences protect individuals of two of the known populations of this species, and nonnative plants have been reduced in one fenced area; however, continued monitoring of these fences will be necessary, as feral ungulates from surrounding areas can easily access unmaintained fenced areas. This species is represented in three *ex-situ* collections. The threats continue to be of a high magnitude because they significantly affect the species resulting in direct mortality or reduced reproductive capacity. The threats are imminent because they are ongoing in at least two of the eight known populations. Therefore, we retained an LPN of 2 for this species.

Cyanea calycina (Haha) – We have not updated our assessment for this species, as we are currently developing a proposed listing rule.

Cyanea kunthiana (Haha) – The following summary is based on information contained in our files. No new information was provided in the petition we received on May 11, 2004. *Cyanea kunthiana* is a shrub found in closed *Metrosideros-Dicranopteris* (ohia-uluhe) montane wet forest on Maui, Hawaii. The historic range of *C. kunthiana* was wet forest on the island of Maui. Currently, *C. kunthiana* is declining throughout its range, and is known from 38 populations totaling between 475 and 675 individuals. This species is threatened by pigs that directly prey upon the plants and degrade and destroy habitat, and by nonnative plants that outcompete and

displace it. Potential threats to this species include rats and slugs that may directly prey upon and defoliate individuals. Predation and habitat destruction significantly affect the continued existence of the species. While large-scale fencing, ungulate removal, and invasive species control measures are underway in areas in which five of the current populations exist, these efforts have not served to completely remove these threats, and there are no efforts to control the ongoing and imminent threats to the remaining 33 populations. Therefore, the threats continue to be of a high magnitude to *C. kunthiana*, and are imminent for more than eighty percent of the populations. Therefore, we retained an LPN of 2 for this species.

Cyanea lanceolata (Haha) – We have not updated our assessment for this species, as we are currently developing a proposed listing rule.

Cyanea obtusa (Haha) – The following summary is based on information contained in our files. No new information was provided in the petition we received on May 11, 2004. *Cyanea obtusa* is a shrub found in *Metrosideros polymorpha* (ohia) mixed mesic forest on Maui, Hawaii. This species is known from two populations with a combined total of fewer than 24 individuals. *Cyanea obtusa* is threatened by feral goats, pigs, and cattle that degrade and destroy habitat, and by nonnative plants that outcompete and displace it. Potential threats include fire, and rats and slugs that may directly prey upon and defoliate individuals of *C. obtusa*. Feral pigs have been fenced out of one population of this species, with nonnative plant control in the fenced area. Although one population of *C. obtusa* has been fenced and is undergoing weed control, there are no efforts to control the ongoing and imminent threats to the other population. The threats continue to be of a high magnitude for *C. obtusa* because they significantly affect the species resulting in direct mortality or reduced reproductive capacity, and the threats are ongoing. Therefore, we retained an LPN of 2 for this species.

Cyanea tritomantha (Aku) – The following summary is based on information contained in our files. No new information was provided in the petition we received on May 11, 2004. *Cyanea tritomantha* is a palm-like tree found in *Metrosideros-Cibotium* (ohia-hapuu) montane wet forest on the island of Hawaii. This species is known from 16 populations with a total of approximately 300 to 400 individuals. *Cyanea tritomantha* is threatened by pigs and cattle that degrade and destroy habitat, and nonnative plants that outcompete and displace it. Potential threats to this species include predation by rats and slugs that may directly prey upon and defoliate individuals, and human trampling of individuals located near trails. Feral pigs and cattle have been fenced out of three populations of *C. tritomantha*, and nonnative plants have been reduced in the fenced areas. Although three populations of *C. tritomantha* have been fenced and weeds are being controlled in these fenced areas, there are no efforts to control the ongoing and imminent threats to the other 13 populations. The threats continue to be of a high magnitude to *C. tritomantha* because they significantly affect the species resulting in direct mortality or reduced reproductive capacity. They are ongoing and therefore imminent for more than seventy-five percent of the population where no control measures have been implemented. Because the threats continue to be of a high magnitude and are imminent for the unmanaged populations, we retained an LPN of 2 for this species.

Cyrtandra filipes (Haiwale) – The following summary is based on information contained in our files. No new information was provided in the petition we received on May 11, 2004. Haiwale is a shrub found in lowland to montane wet forest on Maui and Molokai, Hawaii. Historically rare, *C. filipes* was found in southeastern Molokai and west Maui. Currently, this species is known from 10 populations, 3 on Molokai and 7 on west Maui, totaling approximately 2,000 individuals. There is some question as to the true identity of the Maui populations, which do not fit the description of the species precisely. If, upon further taxonomic study, the Maui populations are determined not to be this species, then it is even rarer, with only the Molokai populations of a few individuals remaining. *Cyrtandra filipes* is threatened by pigs, goats, and deer that degrade and destroy habitat, by nonnative plants that outcompete and displace it, and potentially by rats that directly prey on it. Feral pigs have been fenced out of one of the populations of *C. filipes* on Maui, and strategic fencing for axis deer is under construction on west Maui, but deer are able to jump over most pig exclusion fences so they are still considered a threat. Nonnative plants are being reduced in the population that is fenced but all populations are potentially threatened by rats. The threats from pigs and nonnative plants are of a high magnitude because of their severity and the fact that they occur in eight of the 10 known populations. In addition, these threats are imminent because they are ongoing. Therefore, we retained an LPN of 2 for this species.

Cyrtandra kaulantha (Haiwale) – We have not updated our assessment for this species, as we are currently developing a proposed listing rule.

Cyrtandra oxybapha (Haiwale) – The following summary is based on information contained in our files. No new information was provided in the petition we received on May 11, 2004. *Cyrtandra oxybapha* is a shrub found in *Metrosideros polymorpha-Cheirodendron trigynum* (ohia-olapa) montane wet forest to mesic *Acacia-Metrosideros* (koa-ohia) forest on Maui, Hawaii. Currently, this species is known from two populations totaling 73 to 123 individuals on west Maui. This species is threatened by pigs, goats, and cattle that degrade and destroy habitat, and by nonnative plants that outcompete and displace it. Fire is a likely threat at the Kahikinui population. The individuals within the fence at Kahikinui benefit from management actions; however, the remaining individuals there and on west Maui are threatened by pigs, goats, cattle, and likely threatened by fire. The threats are of a high magnitude because of their severity and are imminent since they are ongoing. Therefore, we retained an LPN of 2 for *C. oxybapha*.

Cyrtandra sessilis (Haiwale) – We have not updated our assessment for this species, as we are currently developing a proposed listing rule.

Dalea carthagenensis floridana (Florida prairie-clover) – The following summary is based on information contained in our files. No new information was provided in the petition we received on May 11, 2004. *Dalea carthagenensis* var. *floridana* occurs in Big Cypress National Preserve (BCNP) in Monroe and Collier Counties, Florida. It is also known from small populations in Miami-Dade County. There are a total of nine extant occurrences, most of which are on conservation land. Existing occurrences are extremely small and may not be viable, especially those in Miami-Dade County. Remaining habitats are fragmented. This plant is threatened by habitat loss and degradation due to fire suppression, the difficulty of applying prescribed fire to pine rocklands, and threats from exotic plants. Damage to plants by off-road vehicles is a serious threat within the BCNP; the threat from illegal mountain-biking at the R. Hardy Matheson Preserve has been reduced. One location within BCNP is threatened by changes in mowing practices; this

threat is considered to be low. This species is being parasitized by the introduced insect lobate lac scale at some localities (e.g., R. Hardy Matheson Preserve), but we do not know the extent of this threat. This plant is vulnerable to natural disturbances, such as hurricanes, tropical storms, and storm surges. Due to its restricted range and the small sizes of most isolated occurrences, this species is vulnerable to environmental (catastrophic hurricanes), demographic (potential episodes of poor reproduction), and genetic (potential inbreeding depression) threats. The magnitude of threats is high, and threats are imminent because of the limited number of occurrences and the small number of individual plants at each occurrence. In addition, even though many sites are on conservation lands, these plants still face significant ongoing threats. Therefore, we have assigned an LPN of 3 to this subspecies.

Dichanthelium hirstii (Hirsts' panic grass) – The following summary is based on information contained in our files. No new information was provided in the petition we received on May 11, 2004. *D. hirstii* is a perennial grass that produces erect leafy flowering stems from May to October. *D. hirstii* occurs in coastal plain intermittent ponds, usually in wet savanna or pine barren habitats and is found at only two sites in New Jersey, one site in Delaware, and one site in North Carolina. While all four extant *D. hirstii* populations are located on public land or privately owned conservation lands, natural threats to the species from encroaching vegetation and fluctuations in climatic conditions remain of concern and may be exacerbated by anthropomorphic factors occurring adjacent to the species' wetland habitat. Given the low numbers of plants found at each site, even minor changes in the species' habitat could result in local extirpation. Loss of any known sites could result in a serious protraction of the species' range. However, the most immediate and severe of the threats to this species (i.e., ditching of the Laboundsky Pond site, and encroachment of aggressive vegetative competitors) have been curtailed or are being actively managed by The Nature Conservancy at one New Jersey site and by the Delaware Division of Fish and Wildlife and Delaware Natural Heritage Program at the Assawoman Pond, Delaware site. Based on nonimminent threats of a high magnitude, we retain an LPN of 5 for this species.

Digitaria pauciflora (Florida pineland crabgrass) – The following summary is based on information contained in our files. No new information was provided in the petition we received on May 11, 2004. Florida pineland crabgrass occurs in the pineland/prairie ecotones and prairies in Miami-Dade and Monroe Counties, Florida. Pine rocklands in Miami-Dade County have largely been destroyed by residential, commercial, and urban development and agriculture. Most remaining habitat has been negatively altered, and this species has been extirpated from much of its historical range, including extirpation from all areas outside of National Parks. Two large occurrences remain within Everglades National Park and Big Cypress National Preserve. While privately owned pine rocklands and prairies are at risk to development, the plants on Federal lands are protected from this threat.

This species is threatened by habitat loss and degradation due to fire suppression, the difficulty of applying prescribed fire to pine rocklands, and exotic plants. Since the only remaining populations are on lands managed by the National Park Service, the threats of fire suppression and exotics are somewhat reduced. The presence of the exotic Old World climbing fern is of particular concern due to its ability to spread rapidly. In Big Cypress National Preserve, plants have been threatened by off-road vehicle use. Another threat is hydrology changes. Hydrology has been altered within Long Pine Key due to artificial drainage, which lowered ground water, and construction of roads, which either impounded or diverted water. Regional water management intended to restore the Everglades has the potential to affect the pinelands of Long Pine Key, where a large population occurs. At this time, it is not known whether Everglades restoration will have a positive or negative effect. This narrow endemic may be vulnerable to catastrophic events and natural disturbances, such as hurricanes. Sea level rise will likely be a factor over the long-term. Overall, the magnitude of threats is high because occurrence of the species within the National Park has not eliminated such threats as exotic plants and off-road vehicle use, which may negatively affect this species throughout its range. However, the majority of threats are nonimminent as they are long-term in nature (water management, hurricanes, and sea-level rise). Therefore, we assigned an LPN of 5 for this species.

Echinomastus erectocentrus var. *acunensis* (Acuna cactus) – The following summary is based on information contained in our files and the petition we received on October 30, 2002. The Acuna cactus is known from six sites in Arizona and Mexico. It occurs on well-drained gravel ridges and knolls on granite soils in Sonoran Desert scrub association at 1300–2000 feet elevation.

Habitat destruction has been a threat in the past and is a potential future threat to this species. New roads and illegal activities have not yet directly affected the cactus populations at Organ Pipe Cactus National Monument, Arizona, but areas in close proximity to these known populations have been altered. Cactus populations located in the Florence area (Arizona) have not been monitored, and these populations may be in danger of habitat loss due to recent urban growth in the area. Urban development near Ajo, Arizona, as well as that near Sonoyta, Mexico, is a significant threat to the Acuna cactus. Populations of the Acuna cactus within the Organ Pipe Cactus National Monument have shown a 50 percent mortality rate in recent years. The reason(s) for the mortality are not known, but continuing drought conditions which are prevalent throughout the range of the Acuna cactus are thought to play a role. The Arizona Plant Law and the Convention on International Trade in Endangered Species of Wild Fauna and Flora provide some protection for the Acuna cactus. However, illegal collection is a primary threat to this cactus variety, and has been documented on the Organ Pipe Cactus National Monument in the past. The threats continue to be of a high magnitude as they have a significant negative impact to the long-term viability of this cactus as demonstrated by the continued dramatic decline of the variety. The threats are imminent because habitat loss from drought and urban development are ongoing. Therefore, we assigned an LPN of 3 to the Acuna cactus.

Erigeron lemmonii (Lemmon fleabane) – The following summary is based on information contained in our files and the petition we received in July 1975. The species is known from one site in a canyon in the Fort Huachuca Military Reservation of southeastern Arizona. As of 2006, approximately 950 plants were known from this site, where the occupied habitat encompasses about 1 square kilometer.

The threats to this species are from catastrophic wildfire in the canyon and ongoing drought conditions. We do not know if this species has any adaptations to fire. Due to its location on cliffs, we suspect that fires may have occurred at regular intervals and burned at low intensities, and thus may have had little to no effect on this species. It is due only to lack of fire and the accumulated

fuel load that the fire intensity and associated heat may be high enough to damage or kill plants on adjacent cliffs, especially near the ground. On the other hand, plants that are much higher on the cliff face would probably not be affected. The magnitude of threats is moderate because we believe that not all of the population would be adversely affected by a wildfire or drought. The threats are imminent because the likelihood of a fire is high. The LPN for Lemmon fleabane remains an 8 due to moderate, imminent threats.

Eriogonum codium (Umtanum Desert buckwheat) – The following summary is based on information contained in our files. No new information was provided in the petition we received on May 11, 2004. This species is a long-lived, slow-growing, woody perennial plant that forms low dense mats. The species occupies a single location on the Hanford National Monument in Washington State. It is found only on an exposed basalt ridge; we do not know if this association is related to the chemical or physical characteristics of the bedrock or other factors. Individual plants may exceed 100 years of age, based on counts of annual growth rings. A count in 1997 reported 5,228 individuals; by 2005 the figure had dropped to 4,418, declining 15% over eight years. A population viability analysis in 2006 based on 9 years of demographic data estimated that that there is little or no risk of a population decline greater than 90 percent within 100 years, but there is a 72 percent chance of a decline of 50 percent.

The major threats to the species are wildfire, fire-fighting activities, trampling, and invasive weeds. However, the relationship between the decline in population numbers and the known threats is not understood at this time. With the possible exception of wildfire, the observed decline in population numbers and recruitment since 1997 is not directly attributable to the currently known threats. Because the population is small, limited to a single site, and sensitive to fire and disturbance, the species remains vulnerable to the identified threats. The magnitude of threats is high because, given the limited range of the species and the degree of uncertainty about its habitat and the cause of its declines, any of the threats could adversely affect its continued existence. The threats are both ongoing and imminent in nature. Because the species continues to be vulnerable to these threats, we assigned an LPN of 2 to this species.

Eriogonum kelloggii (Red Mountain buckwheat) – The following summary is based on information contained in our files. No new information was provided in the petition we received on May 11, 2004. Red Mountain buckwheat is a perennial herb endemic to serpentine habitat of lower montane forests found between 1,900 and 4,100 feet. Its distribution is limited to the Red Mountain and Little Red Mountain areas of Mendocino County, California, where it occupies a total of 50 acres and 900 square feet, respectively. Occupied habitat at Red Mountain is scattered over 4 square miles. Total population size is estimated at between 20,000 and 30,000 plants, which occur in 44 polygons. Intensive monitoring of permanent plots on three study sites in Red Mountain suggests considerable annual variation in plant density and reproduction, but no discernable population trend was evident in two of three study sites. One study site showed a 65 percent decline in plant density over 11 years.

The primary threat to this species is the potential for surface mining for chromium and nickel. Virtually the entire distribution of Red Mountain buckwheat is either owned by mining interests, or is covered by existing mining claims, none of which are currently active. Surface mining would destroy habitat suitability for this species. The species is also believed threatened by tree and shrub encroachment into its habitat, in absence of fire. The threat of surface mining is high in magnitude because it would prevent the continued existence of the species in the larger of two locations. That threat is nonimminent because none of the mining claims are active. Because of the high-magnitude, nonimminent threat to the small, scattered populations, we assigned a listing priority number of 5 to this species.

Eriogonum corymbosum var. *nilesii* (Las Vegas buckwheat) – The following summary is based on information contained in our files and the petition we received on April 23, 2008. The Las Vegas buckwheat is a woody perennial shrub restricted to gypsum soil outcroppings in Clark and Lincoln Counties, Nevada.

Destruction and modification of habitat from development is a significant threat with over 95 percent of the historic range and potential habitat of the subspecies affected. In 2005, the Las Vegas buckwheat was known from nine locations on approximately 1,149 acres, but occupied habitat has declined since then to 892 acres due to development. In addition, OHV activity and other public land uses (casual public use, mining, and dumping) directly and indirectly threaten over half of the remaining habitat. To date, regulatory mechanisms to protect the Las Vegas buckwheat are inadequate. Its designation by the Bureau of Land Management (BLM) as a special status species has not provided adequate protection on lands managed by the BLM in large part due to limitations on resources and law enforcement personnel. The Las Vegas buckwheat is not protected by the State of Nevada or any other regulatory mechanisms on other federal lands. Conservation measures are being developed that could reduce the amount of occupied habitat at risk, but we believe it would be premature to consider these measures sufficiently complete as to remove these threats. The magnitude of threats is high, since the more significant threats (development and surface mining) would result in direct mortality of the plants in over half of its habitat. While both development and mining are very likely to occur in the future, they are not expected to happen in the immediate future, and thus, the threats are nonimminent. Accordingly, we assigned the Las Vegas buckwheat an LPN of 6.

Festuca hawaiiensis (no common name) – The following summary is based on information contained in our files. No new information was provided in the petition we received on May 11, 2004. This species is a cespitose (growing in dense, low tufts) annual found in dry forest on the island of Hawaii. *Festuca hawaiiensis* is known from four populations totaling approximately 1,000 individuals in and around the Pohakuloa Training Area (PTA). Historically, this species was also found on Hualalai and Puu Huluhulu on Hawaii and possibly Ulupalakua on Maui, but it no longer occurs at these sites. *Festuca hawaiiensis* is threatened by pigs, goats, mouflon, and sheep that degrade and destroy habitat; fire; military training activities; and nonnative plants that outcompete and displace it. Feral pigs, goats, mouflon, and sheep have been fenced out of a portion of the populations of *F. hawaiiensis*, and nonnative plants have been reduced in the fenced areas but the majority of this population is still impacted by threats from fire and will require long-term monitoring and management. The threats are imminent because they are not controlled and are ongoing in the remaining, unfenced populations. Firebreaks have been established at two other populations but again fire is an imminent threat to the other two populations that have no firebreaks. The threats are of a high magnitude because

they could adversely affect *F. hawaiiensis* resulting in direct mortality or reduced reproductive capacity. Therefore, we retained an LPN of 2 for this species.

Festuca ligulata (Guadalupe fescue) – The following summary is based on information contained in our files and the petition we received in 1975. Guadalupe fescue is a member of the Poaceae (grass family). This species is currently only known from higher elevations in the Chisos Mountains in the Big Bend Area of Texas (one population) and adjacent Coahuila, Mexico (two populations). The population in Big Bend National Park is bisected by a trail and subject to occasional trampling by horses and hikers and may be impacted by the lack of proper fire management. A new Candidate Conservation Agreement between the Service and the National Park Service provides for additional conservation efforts, population monitoring, fire management, and trail operation by the National Park Service; these actions partially address threats to the species. Overall, the magnitude of the threats of trampling and lack of proper fire management is moderate to low and nonimminent because of the actions under this agreement. Thus, we assign a LPN of 11 to this species.

Gardenia remyi (Nanu) – The following summary is based on information contained in our files. No new information was provided in the petition we received on May 11, 2004. Nanu is a tree found in mesic to wet forest on islands of Kauai, Molokai, Maui, and Hawaii, Hawaii. *Gardenia remyi* is known from 20 populations totaling between 77 and 104 individuals. This species is threatened by pigs, goats, and deer that degrade and destroy habitat and possibly prey upon the species, and by nonnative plants that outcompete and displace it. It is also threatened by landslides on the island of Hawaii. This species is represented in an *ex-situ* collection. Feral pigs have been fenced out of the west Maui populations of *G. remyi*, and nonnative plants have been reduced in those areas. However, these threats are not controlled and are ongoing in the remaining, unfenced populations, and are, therefore, imminent. In addition, the threat from goats and deer is ongoing and imminent throughout the range of the species, because no goat or deer control measures have been undertaken for any of the populations of *G. remyi*. All of the threats are of a high magnitude because habitat destruction, predation, and landslides are significant enough that they could adversely affect the species resulting in direct mortality or reduced reproductive capacity. Therefore, we retained an LPN of 2 for this species.

Geranium hanaense (Nohoanu) – The following summary is based on information contained in our files. No new information was provided in the petition we received on May 11, 2004. *Geranium hanaense* is threatened by pigs that degrade and destroy habitat, and by nonnative plants that outcompete and displace it. However, feral pigs have been fenced out of and removed from both bogs in which this species currently occurs, and a control program has reduced nonnative plants in all fenced areas. Given that the threats to the only known populations of this species are currently being managed and the populations are routinely monitored, the overall magnitude of these threats is moderate. The threats are imminent because the fences must be routinely monitored and nonnative plants must continually be controlled. Therefore, we retained an LPN of 8 for this species.

Geranium hillebrandii (Nohoanu) – The following summary is based on information contained in our files. No new information was provided in the petition we received on May 11, 2004. *Geranium hillebrandii* is a decumbent subshrub found in bogs on Maui, Hawaii. It is currently known from three populations totaling approximately 10,000 individuals. *Geranium hillebrandii* is threatened by pigs that degrade and destroy habitat, and by nonnative plants that outcompete and displace it. Conservation measures taken to control feral pigs and nonnative plants reduce the impact of these threats to G. *hillebrandii*; however, continued monitoring will be necessary to keep the areas threat-free. The threats from feral pigs and nonnative plants are, therefore, of a moderate magnitude to this species; however, these threats are imminent because they are ongoing in half of the populations and require continued monitoring in the other half. Therefore, we retained an LPN of 8 for this species.

Gonocalyx concolor (no common name) – The following summary is based on information contained in our files. No new information was provided in the petition we received on May 11, 2004. *Gonocalyx concolor* is a small evergreen epiphytic shrub. Currently, *G. concolor* is known only from the dwarf or elfin forest type in the Carite Commonwealth Forest (Cerro La Santa), located in the Sierra de Cayey in the municipalities of Guayama, Cayey, Caguas, San Lorenzo, and Patillas in southeastern Puerto Rico. The population previously reported in the Caribbean National Forest in Puerto Rico is apparently no longer extant. The entire population located at one site consists of approximately 172 individuals. Habitat destruction from construction of roads and telecommunication towers, certain forest management practices such as the development and maintenance of trails, and potential for catastrophic natural events threaten this species. Its restricted distribution renders this species highly vulnerable to natural (e.g., hurricanes, landslides) or manmade (e.g., telecommunication towers, forest management practices) threats to its habitat and population, thus making the threat magnitude high. This species is classified as critical by Puerto Rico Department of Natural and Environmental Resources (PRDNER); however, this designation does not provide any regulatory protection. The PRDNER developed a management plan for the Carite Commonwealth Forest in 1976, which includes the protection and conservation of species classified under PRDNER regulations as critical, threatened, or endangered, but it does not include specific measures for the protection of this species. Generally, PRDNER scrutinizes any actions that may affect species classified as critical, and recommends or implements measures to minimize or avoid impacts to these species if deemed appropriate. The immediacy of the threats from building roads and towers and developing and maintaining trails is thus nonimminent. Therefore, we have assigned a listing priority number of 5 for *Gonocalyx concolor*.

Hazardia orcuttii (Orcutt's hazardia) – The following summary is based on information contained in our files and the petition we received on March 8, 2001. *Hazardia orcuttii* is an evergreen shrubby species in the Asteraceae (sunflower family). The only known extant native occurrence of this species in the U.S. is in the Manchester Conservation Area in northwestern San Diego County, California. This site is managed by Center for Natural Lands Management. *Hazardia orcuttii* also occurs at a few coastal sites in Mexico, where it has no conservation protections in Mexico. There are approximately 668 native adult plants and 50 seedlings remaining in the U.S., and the population in Mexico is estimated at approximately 1300 plants.

The occurrences in Mexico are threatened by the rapid rate of coastal development from Tijuana to Ensenada. Apparent threats to the U.S. population include ongoing pedestrian trampling, impacts from on and off-leash dogs, and creation of bicycle trails near *Hazardia orcuttii* plants. Competition from

invasive nonnative plants may pose a threat to the reproductive potential of this species. Another significant threat is the species' apparently low reproductive output; in a recent study, 95 percent of the flowers examined were damaged by insects or fungal agents or aborted prematurely, and insects or fungal agents damaged 50 percent of the seeds produced. Overall, the threats are of a high magnitude since they have the potential to significantly reduce the reproductive potential of this species. The threats are nonimminent overall because although trampling and other recreational impacts are ongoing, the most significant threats (competition and low reproductive output) are nonimminent and long-term in nature. Thus, we assigned this species a LPN of 5.

Hedyotis fluviatilis (Kamapuaa) – The following summary is based on information contained in our files. No new information was provided in the petition we received on May 11, 2004. Kamapuaa is a scandent shrub found in mixed shrubland to wet lowland forest on Oahu and Kauai, Hawaii. This species is known from 12 populations totaling 1,000 to 1,400 individuals. *Hedyotis fluviatilis* is threatened by pigs and goats that degrade and destroy habitat, and by nonnative plants that outcompete and displace it. All of the threats occur range-wide, and no efforts for their control or eradication are being undertaken. Displacement and habitat destruction have a negative impact on the continued existence of the species. We retained an LPN of 2 because the severity of the threats is high and the threats are ongoing so are imminent.

Helianthus verticillatus (Whorled sunflower) – The following summary is based on information contained in our files. No new information was provided in the petition we received on May 11, 2004. The whorled sunflower is found in moist, prairie-like openings in woodlands and along adjacent creeks. Despite extensive surveys throughout its range, only five populations are known: two populations in Cherokee County, Alabama; one population in Floyd County, Georgia; and one each in Madison and McNairy Counties, Tennessee. This species appears to have restricted ecological requirements and is dependent upon the maintenance of prairie-like openings for its survival. Much of its habitat has been degraded or destroyed for agricultural, silvicultural, and residential purposes. Populations near roadsides or powerlines are threatened by herbicide usage in association with right-of-way maintenance. The majority of the Georgia population is protected due to their location within a conservation easement area; however, only 15 to 20 plants are estimated to occur at this site. We assigned an LPN of 5 to this species, as the magnitude of threats is high, since there are only five populations and only one of these is under any protection from threats that could eliminate the continued existence of the other populations; the threats are nonimminent, since the whorled sunflower appears to withstand some disturbance and there are no known immediate threats to the sites.

Hibiscus dasycalyx (Neches River rose-mallow) – The following summary is based on information contained in our files. No new information was provided in the petition received on May 11, 2004. This mallow species, found in Cherokee, Houston, and Trinity Counties, Texas, appears to be restricted to portions of wetlands that are exposed to open sun and normally hold standing water early in the growing season, with water levels dropping during late summer and fall. Habitat has been affected by drainage or filling of floodplain depressions and oxbows, stream channelization, road construction, timber harvesting, agricultural activities (primarily mowing and grazing), and herbicide use. Threats that continue to affect the species include wetland alteration, herbicide use, grazing, mowing during the species' growing and flowering period, and genetic swamping by other *Hibiscus* species.

A 1995 status survey of 10 counties resulted in confirmation of the species at only three sites, but in three separate counties and three different watersheds, suggesting a relatively wide historical range. These three populations were all within highway rights-of-way and vulnerable to herbicides and adjacent agricultural activities. As of 2005, only 20 plants remained at one of these sites. Additional surveys for *H. dasycalyx* resulted in identifying new populations. About 300 plants were found on land owned by Temple-Inland Corporation in east Trinity County. A Candidate Conservation Agreement was developed for this site, but smaller plant numbers have been seen in recent years, possibly due to changes in the wetland's hydrology. Another site discovered on land previously owned by Champion International Corporation (near White Rock Creek in west Trinity County) once supported 300-400 plants; this site was modified in 2007, and was reassessed in 2008, but data is still being analyzed. In west Houston County, a population of 300 to 400 plants discovered on private land has been purchased by the Natural Area Preservation Association in order to protect this land in perpetuity. In east Houston County, a population discovered in Compartment 55 in Davy Crockett National Forest numbered over 1,000 in 2006. In 2000, nearly 800 plants were introduced into Compartments 16 and 20 of Davy Crockett National Forest as part of a reintroduction effort. One population retained high numbers (350 in 2006), but sustained high water in 2007, and may have been adversely affected. The second site was affected by a change in hydrology, and had declined to 50 plants in 2006. In 2004, 200 plants were placed in a wetland in Compartment 11 of Davy Crockett National Forest, but only 10 plants were seen in 2006. High water from heavy spring and summer rains prevented further assessment of these rose-mallow sites in 2007.

The threats continue to be of a high magnitude because they can severely affect the survival and reproductive capacity of the species. Overall, the threats are nonimminent since they are not currently affecting or likely to affect the majority of the populations of this species in the immediate future. Thus, we have retained an LPN of 5 for the Neches River rose-mallow.

Ivesia webberi (Webber ivesia) – The following summary is based on information contained in our files. No new information was provided in the petition we received on May 11, 2004. *Ivesia webberi* is a low, spreading, perennial herb that occurs very infrequently in Lassen, Plumas, and Sierra counties in California, and in Douglas and Washoe counties, Nevada. The species is restricted to sites with sparse vegetation and shallow, rocky soils composed of volcanic ash or derived from andesitic rock. Occupied sites generally occur on mid-elevation flats, benches, or terraces on mountain slopes above large valleys along the transition zone between the eastern edge of the northern Sierra Nevada and the northwestern edge of the Great Basin Desert. Currently, the global population is estimated at approximately 4.8 million individuals at 15 known sites. The Nevada sites support nearly 98 percent of the total number of individuals (4.7 million) on about 30 acres of occupied habitat. The California sites are larger in area, totaling about 156 acres, but support fewer individuals (approximately 115,000).

The primary threats to Webber ivesia include urban development, authorized and unauthorized roads, off-road vehicle activities and other dispersed recreation, livestock grazing and trampling, fire and fire suppression activities including fuels reduction and prescribed fires, and displacement by

noxious weeds. Despite the high numbers of individuals, observations in 2002 and 2004 confirmed that direct and indirect impacts to the species and its habitat, specifically from urban development and off-highway vehicle activity, remain high and are likely to increase. Therefore, the magnitude of these threats is high. The U.S. Forest Service has committed to develop a conservation strategy and monitoring program to protect this species on National Forest lands, and the State of Nevada has listed the species as critically endangered, which provides a mechanism to track future impacts on private lands. In addition, both the Forest Service and State of Nevada have agreed to coordinate closely with the Fish and Wildlife Service on all activities that may affect this species. In light of these conservation commitments, we have determined that the threats to Webber ivesia are nonimminent and the LPN remains a 5.

Joinvillea ascendens ssp. *ascendens* (Ohe) – The following summary is based on information contained in our files. No new information was provided in the petition we received on May 11, 2004. Ohe is an erect herb found in wet to mesic *Metrosideros polymorpha-Acacia koa* (ohia-koa) forest on the islands of Kauai, Oahu, Molokai, Maui, and Hawaii, Hawaii. Ohe is known from 38 populations totaling approximately 180 individuals throughout its range. Plants are typically found as only one or two individuals, with miles between populations. This subspecies is threatened by destruction or modification of habitat due to pigs, goats, and deer, and by nonnative plants that outcompete and displace native plants. Predation by pigs, goats, deer, and rats is a likely threat to this species. Seedlings have rarely been observed in the wild. Seeds germinate in cultivation, but most die soon thereafter. It is uncertain if this rarity of reproduction is typical of this subspecies, or if it is related to habitat disturbance. Feral pigs have been fenced out of a few of the populations of this subspecies, and nonnative plants have been reduced in a few populations that are fenced. However, these threats are not controlled and are ongoing in the many remaining, unfenced populations. The threats are of high magnitude because habitat degradation, nonnative plants and predation could affect the ability of the subspecies to survive. The threats are ongoing, and thus are imminent. Therefore, we retained an LPN of 3 for this subspecies.

Korthalsella degeneri (Hulumoa) – We have not updated our assessment for this species, as we are currently developing a proposed listing rule.

Leavenworthia crassa (Gladecress) – The following information is based on information contained in our files. No new information was provided in the petition we received on May 11, 2004. This species of gladecress is a component of glade flora, occurring in association with limestone outcroppings. *Leavenworthia crassa* is endemic to a 13-mile radius area in Lawrence and Morgan Counties, Alabama, where only six populations of this species are documented. Glade habitats today have been reduced to remnants fragmented by agriculture and development. Populations of this species are now located in glade-like areas exhibiting various degrees of disturbance including pastureland, roadside rights-of-way, and cultivated or plowed fields. The most vigorous populations of this species are located in areas which receive full, or near full, sunlight with limited herbaceous competition. The magnitude of threat is high because with the limited number of populations, the threats from herbicide use, and degradation of habitat by dumping, ATV use, and competition from other plants including nonnative species, could result in direct mortality or reduced reproductive capacity of the species. This species appears to be able to adjust to periodic disturbances and the potential impacts to populations from competition, exotics, and herbicide use are nonimminent. In addition, at this time, we know of no projects planned in the area that would lead to the destruction of habitat where this species is currently located. Thus, we assigned an LPN of 5 to this species.

Leavenworthia texana (Texas golden gladecress) – The following summary is based on information contained in our files. No new information was provided in the petition we received on May 11, 2004. The gladecress occurs only on the Weches outcrops of east Texas in San Augustine and Sabine counties. The Weches geologic formation consists of a layer of calcareous sediment, lying above a layer of glauconite clay deposited up to 50 million years ago. Erosion of this complex has produced topography of steep, flat-topped hills and escarpments, as well as the unique ecology of Weches glades: islands of thin, loamy, seepy, alkaline soils that support open-sun, herbaceous, and highly diverse and specialized plant communities.

The gladecress was historically recorded at eight sites, all in a narrow region along north San Augustine and Sabine counties. All sites are on private land. The species has been extirpated from three sites due to glauconite mining. Two sites are currently closed to visitors. The Sabine County site supported 1,000 plants within 9 square meters (97 square feet) in 2007. The Tiger Creek site in San Augustine County (less than 0.1 hectare (.2 acre) in size) was found to have about 200 gladecress in 2007. The Kardell site (less than 9 square meters (97 square feet)) has supported 400-500 plants in past years, but none in 2005. An introduced population in Nacogdoches County numbered about 1,000 within an area of about 18 square meters (194 square feet) in 2007.

Historic gladecress habitat has been affected by highway construction, residential development, conversion to pasture and cropland, widespread use of herbicide, overgrazing, and glauconite mining. The primary threat to existing gladecress populations is the invasion of nonnative and weedy shrubs and vines (primarily Macartney rose (*Rosa bracteata*) and Japanese honeysuckle (*Lonicera japonica*)). All known sites are undergoing severe degradation by the incursion of nonnative shrubs and vines, which restrict both growth and reproduction of the gladecress. Brush clearing carried out in 1995 resulted in the reappearance of gladecress after a 10–year absence at one site. However, nonnative shrubs have again invaded this area. More effective control measures for nonnative species, such as burning and selective herbicide use, need to be tested and monitored. The small number of known sites also makes the gladecress vulnerable to extreme natural disturbance events. A severe drought in 1999 and 2000 had a pronounced adverse effect on gladecress reproduction. Since the threat from nonnative plants severely affects all known sites, the magnitude of threats is high. The threats are imminent, since they are ongoing. Therefore, we retain an LPN of 2 for the Texas golden gladecress.

Lesquerella globosa (Desvaux) Watson (Short's bladderpod) – The following summary is based on information contained in our files. No new information was provided in the petition we received on May 11, 2004. Short's bladderpod is a perennial member of the mustard family that occurs in Indiana (1 location), Kentucky (6 locations), and Tennessee (18 locations). It grows on steep, rocky, wooded slopes, talus areas, along cliff tops and bases, and on cliff ledges. It is usually associated with south to west facing calcareous outcrops adjacent to rivers or streams. Road construction and road maintenance have played a significant role in the decline of *L.*

globosa. Specific activities that have affected the species in the past and may continue to threaten it include bank stabilization, herbicide use, mowing during the growing season, grading of road shoulders, and road widening or repaving. Sediment deposition during road maintenance or from other activities also potentially threatens the species. Because the natural processes that maintained habitat suitability and competition from invasive nonnative vegetation have been interrupted at many locations, active habitat management is necessary at those sites. The threats are high in magnitude because they have the potential to significantly affect the survival and reproductive capacity of the species, in particular since many of the populations are small. Based upon the number of populations and the anticipation that most of these threats will not be realized in the next several years, the threats are nonimminent. Therefore, we assigned an LPN of 5 to this species.

Linum arenicola (Sand flax) – The following summary is based on information contained in our files. No new information was provided in the petition we received on May 11, 2004. Sand flax is found in pine rockland and marl prairie habitats which requires periodic wildfires in order to maintain an open, shrub free subcanopy and reduce litter levels. Based upon available data, there are 11 extant occurrences of sand flax; 11 others are extirpated or destroyed. Only small and isolated occurrences remain in a restricted range of southern Florida and the Florida Keys.

Habitat loss and degradation due to development is a major threat; most of the remaining occurrences are on private land or non-conservation public land. However, much of the pine rocklands on Big Pine Key are protected from development. Nearly all remaining populations are threatened by fire suppression, difficulty in applying prescribed fire, road maintenance activities, exotic species, or illegal dumping. However, some efforts are underway to use prescribed fire and control exotics on conservation lands where this species occurs. Sand flax is vulnerable to natural disturbances, such as hurricanes, tropical storms, and storm surges. Hurricane Wilma inundated most of its habitat on Big Pine Key in 2005, and plants were not found 8–9 weeks post-storm; the density of sand flax declined to zero in all management units at The Nature Conservancy's preserve in 2006. We also consider sea level rise to be a substantial threat that will reduce the extent of upland habitats. Due to the small and fragmented nature of the current population, stochastic events, disease, or genetic bottlenecks may strongly affect this species. Reduced pollinator activity and suppression of pollinator populations from pesticides used in mosquito control and decreased seed production due to increased seed predation in a fragmented wildland urban interface may also affect sand flax; however, not enough information is known on this species' reproductive biology or life history to assess these potential threats. Overall, the magnitude of threats is high because they are all present habitat modifications that limit the continued existence of the species, and most threats are ongoing and thus are imminent. Therefore, we assigned an LPN of 2 to this species.

Linum carteri var. *carteri* (Carter's small-flowered flax) – The following summary is based on information contained in our files. No new information was provided in the petition we received on May 11, 2004. This plant occupies open sites in pinelands of Miami-Dade County, Florida. Currently, there are 10 known occurrences. Occurrences with fewer than 100 individuals are located on three county-owned preserves. A site with more than 100 plants is owned by the U.S. government, but the site is not managed for conservation. The 10 existing occurrences are small and vulnerable to habitat loss, which is exacerbated by habitat degradation due to fire suppression, the difficulty of applying prescribed fire to pine rocklands, and threats from exotic plants. Remaining habitats are fragmented. Non-compatible management practices are also a threat at most protected sites; several sites are mowed during the flowering and fruiting season. The species is vulnerable to natural disturbances, such as hurricanes, tropical storms, and storm surges. This species exists in such small numbers at so few sites, that it may be difficult to develop and maintain viable occurrences on the available conservation lands. Although no population viability analysis has been conducted for this plant, indications are that existing occurrences are at best marginal and it is possible that none are truly viable. As a result, the magnitude of threats is high. The threats are ongoing, and thus are imminent. Therefore, we assigned an LPN of 3 to this plant variety.

Melicope christophersenii (Alani) – We have not updated our assessment for this species, as we are currently developing a proposed listing rule.

Melicope hiiakae (Alani) – We have not updated our assessment for this species, as we are currently developing a proposed listing rule for this species.

Melicope makahae (Alani) – We have not updated our assessment for this species, as we are currently developing a proposed listing rule.

Myrsine fosbergii (Kolea) – The following summary is based on information contained in our files. No new information was provided in the petition we received on May 11, 2004. *Myrsine fosbergii* is a branched shrub or small tree found in cloud swept ridges and wet forest on Kauai and Oahu, Hawaii. This species is currently known from 11 populations totaling approximately 58 individuals on Kauai and from 8 populations totaling between 73 and 83 individuals in the Koolau Mountains of Oahu. *Myrsine fosbergii* is threatened by feral pigs and goats that degrade and destroy habitat and may prey upon the plant, and nonnative plants that compete for light and nutrients. Although there are plans to fence and remove ungulates from the Helemano area of Oahu, which may benefit this species, no conservation measures have been taken to date to alleviate these threats for this species. Feral pigs and goats are found throughout the known range of *M. fosbergii*, as are nonnative plants. The threats from feral pigs, goats, and nonnative plants are of a high magnitude because they pose a severe threat throughout the limited range of this species, and they are ongoing and therefore imminent. We retained an LPN of 2 for this species.

Myrsine vaccinioides (Kolea) – The following summary is based on information contained in our files. No new information was provided in the petition we received on May 11, 2004. *Myrsine vaccinioides* is a small branched shrub found in shrubby bogs on Maui, Hawaii. This species is found scattered throughout the bogs of west Maui, totaling approximately 500 individuals. *Myrsine vaccinioides* is threatened by feral pigs that degrade and destroy habitat, and nonnative plants that compete for light and nutrients. Pig exclusion fences protect some individuals of this species, and nonnative plants have been reduced around some individuals that are fenced. However, these ongoing conservation efforts benefit only a small number of the known individuals. Further, nonnative plants will probably never be completely eradicated because new propagules are constantly being dispersed into the fenced areas from surrounding, unmanaged lands. The threats are of a high magnitude because they pose a severe threat throughout the limited range of the species and are

ongoing, and thus imminent. Therefore, we retained an LPN of 2 for this species.

Narthecium americanum (Bog asphodel) – The following summary is based on information contained in our files. No new information was provided in the petition we received on May 11, 2004. Bog asphodel is a perennial herb that is found in savannah areas, usually with water moving through the substrate, as well as in sandy bogs along streams and rivers. The historic range of bog asphodel included New York, New Jersey, Delaware, North Carolina, and South Carolina, but it is now only found within the Pine Barrens region of New Jersey.

As an obligate wetland species, *N. americanum* is threatened by changes in hydrology, loss of habitat due to filling or draining of wetlands, flooding as a result of reservoir construction, and conversion of natural wetlands to commercial cranberry bogs. In the Pine Barrens region, the Pinelands Commission is responsible for issuing the State-assumed Clean Water Act Section 404 permits. The Pinelands Commission grants wetland exemptions to cranberry production and other agricultural uses. However, illegal wetland filling is occurring. For example, a cranberry expansion was illegally completed without a State permit a few years ago. In addition, activities not needing State or federal permits are occurring in uplands that are indirectly affecting the wetlands. In wetlands supporting bog asphodel, natural succession of vegetation from emergent (herbaceous) to forested wetlands may also be contributing to the species' decline. Suppression of natural wildfires that would retard succession or create open wetland savannahs may be a factor in the decline of the species. Other factors adversely affecting *N. americanum* include trampling, erosion, and siltation caused by recreationists on foot or using off-road vehicles. Approximately 75 percent of known extant populations occur on State-owned lands. These populations are threatened by recreational use and erosion, which are moderate threat because they are localized and occasional. We are working with the New Jersey Department of Environmental Protection to abate these threats. Approximately 20 percent of the known extant sites are on privately owned lands, many of which are threatened by habitat degradation from on-site or adjacent residential or commercial development. These threats could eliminate the bog asphodel from those sites, but because they only represent 20 percent of the occurrences, the threats are moderate overall. The remaining 5 percent of known extant sites occur on federal lands. The threats are imminent because conversion to cranberry bogs, natural succession, wildfire suppression, recreational impacts, and erosion are all ongoing. Overall, based on these imminent, moderate threats, we retain a listing priority number of 8 for this species.

Nothocestrum latifolium (Aiea) – The following summary is based on information contained in our files. No new information was provided in the petition we received on May 11, 2004. Aiea is a small tree found in dry to mesic forest and diverse mesic forests on Kauai, Oahu, Maui, Molokai, and Lanai, Hawaii. *Nothocestrum latifolium* is known from 20 populations totaling fewer than 1,100 individuals. This species is threatened by feral pigs, goats, and axis deer that degrade and destroy habitat and may prey upon it; by nonnative plants that compete for light and nutrients; and by the loss of pollinators that negatively affect the reproductive viability of the species. Ungulates have been fenced out of some areas where *N. latifolium* currently occurs, and nonnative plants have been reduced in some populations that are fenced. However, these ongoing conservation efforts for this species benefit only a few of the known populations. The threats are not controlled and are ongoing in the remaining unfenced populations. In addition, little regeneration is observed in this species. The threats are of a high magnitude, since they are severe enough to affect the continued existence of the species. The threats are imminent, since they are ongoing. Therefore, we retained an LPN of 2 for this species.

Ochrosia haleakalae (Holei) – The following summary is based on information contained in our files. No new information was provided in the petition we received on May 11, 2004. Holei is a tree found often on lava in dry to mesic forest on the islands of Hawaii and Maui, Hawaii. This species is currently known from 11 populations totaling fewer than 130 individuals. *Ochrosia haleakalae* is threatened by fire; by feral pigs, goats, and cattle that degrade and destroy habitat and may directly prey upon it; and by nonnative plants that compete for light and nutrients. Feral pigs, goats, and cattle have been fenced out of one wild and one outplanted population on private lands on the island of Maui and one outplanted population in Hawaii Volcanoes National Park on the island of Hawaii. Nonnative plants have been reduced in the fenced areas. No known conservation measures have been taken to date for the remaining populations on the islands of Maui and Hawaii. The threat from fire is of a high magnitude and imminent because no control measures have been undertaken to address this threat that could adversely affect *O. haleakalae* as a whole. The threats from feral pigs, goats, and cattle are ongoing to the unfenced populations of *O. haleakalae*. The threat from nonnative plants is ongoing and imminent, and of a high magnitude to the wild populations on both islands, since this threat has the potential to adversely affect the continued existence of this species. Therefore, we retained an LPN of 2 for this species.

Pediocactus peeblesianus var. *fickeiseniae* (Fickeisen plains cactus) – The following summary is based on information contained in our files. No new information was provided in the petition we received on May 11, 2004. The Fickeisen plains cactus is a small cactus known from the Gray Mountain vicinity to the Arizona strip in Coconino, Navajo, and Mohave Counties, Arizona. The cactus grows on exposed layers of Kaibab limestone on canyon margins and well-drained hills in Navajoan desert or grassland. In 1999, the Arizona Game and Fish Department noted 23 occurrences of the species, including historical ones. The species is located on Bureau of Land Management (BLM), Forest Service, tribal, and possibly State lands. Recent reports from the BLM and Navajo Nation describe populations of the species as being in decline. The main human-induced threats to this cactus are off-road vehicles and trampling associated with livestock grazing. Monitoring data has detected mortality associated with livestock grazing. Illegal collection of this species has been noted in the past, but we do not know if it is a continuing threat. The populations that have been monitored have been affected, in part, by the continuing drought. There has been very low recruitment, and rabbits and rodents have consumed adult plants, since there is reduced forage available to these animals during drought conditions. Given that there are only a few known populations, that the range of this taxon is limited, and that the majority of the known populations on BLM lands and the Navajo Nation are experiencing declines in populations as a result of the combined threats, we conclude that the threats are of a high magnitude. Since all of the locations of this variety on BLM lands are within grazing allotments and the monitoring data provide evidence that trampling of plants does occur, these threats are ongoing. Therefore, we assigned this plant variety an LPN of 3.

Penstemon debilis (Parachute beardtongue) – We have not updated our assessment for this species, as we are currently developing a proposed listing rule.

Penstemon scariosus var. *albifluvis* (White River beardtongue) - The following summary is based on information contained in our files and the petition we received on October 27, 1983. The White River beardtongue is restricted to calcareous soils derived from oil shale barrens of the Green River Formation in the Uinta Basin of northeastern Utah and adjacent Colorado. There are 14 occurrences known in Utah and 1 in Colorado. Most of the occupied habitat of the White River beardtongue is within developed and expanding oil and gas fields. The location of the species' habitat exposes it to destruction from road, pipeline, and well-site construction in connection with oil and gas development. Recreational off-road vehicle use, heavy grazing by livestock, and wildlife and livestock trampling are additional potential threats. The threats are of high magnitude because they involve habitat destruction that could limit the continued existence of this plant variety. The threats are nonimmient because increased threats associated with oil and gas and oil shale development will probably not be increasing substantially within the next year. Oil shale development remains uncertain within the species' habitat, and is not expected to be a significant factor in the near term. Therefore, based on current information, we retained an LPN of 6.

Peperomia subpetiolata (Ala ala wai nui) – The following summary is based on information contained in our files. No new information was provided in the petition we received on May 11, 2004. Ala ala wai nui is a short-lived perennial herb found in montane mesic forest on Maui, Hawaii. This species is known from one occurrence consisting of two subpopulations on windward east Maui, totaling 23 individuals. Further study of the occurrence indicates that the plants may actually represent clones of only six genetically distinct individuals. There is some question as to the taxonomy of these populations, as putative hybrids have been found in the same areas. *Peperomia subpetiolata* is threatened by feral pigs that may eat this plant and degrade and destroy habitat, and by nonnative plants that compete for light and nutrients. Individuals that occur within the Waikamoi Preserve may benefit from fencing and management actions; however, all of the threats occur range-wide. Te threats are of a high magnitude because they pose a significant threat to the species resulting in direct mortality or reduced reproductive capacity, and are ongoing and therefore imminent. Therefore, we retained an LPN of 2 for this species.

Phacelia submutica (DeBeque phacelia) – We have not updated our assessment for this species, as we are currently developing a proposed listing rule.

Phyllostegia bracteata (no common name) – The following summary is based on information contained in our files. No new information was provided in the petition we received on May 11, 2004. *Phyllostegia bracteata* is a scandent perennial herb found in *Metrosideros-Cheirodendron-Dicranopteris* (ohia-olapa-uluhe) montane wet forest on the island of Maui, Hawaii. Currently this species is known from five populations totaling no more than 12 to 17 individuals on east and west Maui. *Phyllostegia bracteata* is threatened by feral pigs that may directly prey upon it and degrade and destroy habitat, nonnative plants that compete for light and nutrients, and reduced reproductive vigor and randomly occurring natural events. The threats to *P. bracteata* from pigs and nonnative plants are of a high magnitude and imminent because in light of their severity and the limited population size of the species, they pose a risk to the species range-wide, are ongoing, and are not subject to any control efforts. Therefore, we retained an LPN of 2 for this species.

Phyllostegia floribunda (no common name) – The following summary is based on information contained in our files. No new information was provided in the petition we received on May 11, 2004. This species is an erect subshrub found in mesic to wet forest on the island of Hawaii, Hawaii. This species is known from 10 locations totaling fewer than 270 naturally occurring and outplanted individuals on State, private, and Federal lands. *Phyllostegia floribunda* is threatened by feral pigs that degrade and destroy habitat, and nonnative plants that compete for light and nutrients. The National Park Service, The Nature Conservancy, and the State have outplanted more than 170 individuals at Olaa Forest Reserve, Kona Hema, and Waiakea Forest Reserve (greater than 50, 20 individuals, and 100 individuals, respectively). Fences protect approximately seven populations on private, State, and National Park lands. Nonnative plants have been reduced in these fenced areas. However, no conservation efforts have been implemented for the unfenced populations. Overall, the threats are moderate because the conservation efforts, for over half of the populations, reduces the severity of the threats. The threats are ongoing in the unfenced portions and must be constantly managed in the fenced portions. Therefore, the threats are imminent. We retained an LPN of 8 because the threats are of moderate magnitude and are imminent for the majority of the populations.

Physaria tuplashensis (White Bluffs bladder-pod) – The following summary is based on information contained in our files. No new information was provided in the petition we received on May 11, 2004. White Bluffs bladder-pod is a low-growing, herbaceous, short-lived, perennial plant in the Brassicaceae (mustard) family. Historically and currently, White Bluffs bladder-pod has only been known from a single population that occurs along the White Bluffs of the Columbia River in Franklin County, Washington. The entire range of the species is a narrow band, approximately 33 feet (10 meters) wide by 10.6 miles (17 kilometers) long, at the upper edge of the bluffs. The species occurs only on cemented, highly alkaline, calcium carbonate paleosol (a ''caliche'' soil) and is believed to be a ''calciphile.''

Approximately 35 percent of the known range of the species has been moderately to severely affected by landslides, an apparently permanent destruction of the habitat. The entire population of the species is down-slope of irrigated agricultural land, the source of the water seepage causing the mass failures and landslides. Other significant threats include the presence of invasive plants, and some potential use of the habitat by recreational off road vehicles. While *P. tuplashensis* is inherently vulnerable because it is a narrow endemic, the threats are nonimminent since they are unlikely to occur in the immediate future, except the threat from invasive plants. Invasive plants are present in the vicinity, but have not yet been described as a significant problem. Currently, we know of no plans to expand or significantly modify the existing agriculture activities in areas adjacent to the population. In addition, deliberate modification of the species' immediate habitat is unlikely due to its location and 85 percent Federal ownership. However, because the threats could negatively affect the only known population of this species, the threats are high in magnitude. Therefore, we assigned an LPN of 5 to this species. We are currently reviewing information from recent site visits and the effects of a fire during the summer

of 2007 to determine whether to change the LPN next year.

Platanthera integrilabia (Correll) Leur (White fringeless orchid) – The following summary is based on information contained in our files. No new information was provided in the petition we received on May 11, 2004. *Platanthera integrilabia* is a perennial herb that grows in partially, but not fully, shaded, wet, boggy areas at the head of streams and on seepage slopes in Alabama, Georgia, Kentucky and Tennessee. Historically, there were at least 90 populations of *P. integrilabia*. Currently there are only 53 extant sites supporting the species.

Several populations have been extirpated due to road, residential, and commercial construction, and to projects that altered soil and site hydrology such that suitability for the species was reduced. Several of the known populations are in or adjacent to powerline rights-of-way. Mechanical clearing of these areas may benefit the species by maintaining adequate light levels; however, the use of herbicides in these areas could pose a significant threat to the species. All-terrain vehicles have damaged several sites and pose a threat at most sites. Most of the known sites for the species occur in areas that are managed specifically for timber production. Timber management is not necessarily incompatible with the protection and management of the species, but care must be taken during timber management to ensure that the hydrology of the bogs that support the species is not altered. Natural succession can result in decreased light levels. Because of the species dependence upon moderate to high light levels, some type of active management to prevent complete canopy closure is required at most locations. Collecting for commercial and other purposes is a potential threat. Herbivory (primarily deer) threatens the species at several sites. Due to the alteration of habitat and changes in natural conditions, protection and recovery of this species is dependent upon active management rather than just preservation of habitat. Invasive, nonnative plants such as Japanese honeysuckle and kudzu threaten several sites. Overall, the magnitude of threats to this species is high because they result in direct mortality or significantly decrease the reproductive capacity of this species. Because we anticipate that most of these threats will not be realized in the near future, the threats are nonimminent. Therefore, we assigned an LPN of 5 to this species.

Platydesma cornuta var. *cornuta* (no common name) – We have not updated our assessment for this species, as we are currently developing a proposed listing rule.

Platydesma cornuta var. *decurrens* (no common name) – We have not updated our assessment for this species, as we are currently developing a proposed listing rule.

Platydesma remyi (no common name) – The following summary is based on information contained in our files. No new information was provided in the petition we received on May 11, 2004. *Platydesma remyi* is a shrub or shrubby tree found in wet forests on old volcanic slopes on the island of Hawaii, Hawaii. This species is known from two populations totaling fewer than 50 individuals. *Platydesma remyi* is threatened by feral pigs and cattle that degrade and destroy habitat, nonnative plants that compete for light and nutrients, reduced reproductive vigor, and stochastic extinction due to naturally occurring events. Only one individual is included in a rare plant exclosure in the Laupahoehoe Natural Area Reserve. The threats are ongoing and therefore imminent, and of a high magnitude because of their severity; the threats cause direct mortality or significantly reduce the reproductive capacity of the species throughout its limited range. Therefore, we retained an LPN of 2 for this species.

Pleomele forbesii (Hala pepe) – We have not updated our assessment for this species, as we are currently developing a proposed listing rule.

Potentilla basaltica (Soldier Meadow cinquefoil or basalt cinquefoil) – The following summary is based on information contained in our files; the petition we received on May 11, 2004, provided no additional information on the species. Soldier Meadow cinquefoil is a low growing, rhizomatous, herbaceous perennial that is associated with alkali meadows, seeps, and occasionally marsh habitats bordering perennial thermal springs, outflows, and meadow depressions. In Nevada, the species is known only from Soldier Meadow in Humboldt County. At Soldier Meadow, there are 10 discrete known occurrences within an area of about 70 acres that support about 130,000 individuals. In northeastern California, a single population occurs in Lassen County. The California population occupies less than one acre on private lands and supports fewer than 1,000 plants. The species and its habitat are threatened by recreational use in the areas where it occurs, and ongoing impacts of past water diversions livestock grazing, and off-highway vehicle travel. Because of several conservation measures implemented by the Bureau of Land Management, the magnitude of threat to the species is moderate since the measures have reduced the effect of the threats on the species. All remaining threats are nonimminent and involve long-term changes to the habitat for the species resulting from past impacts. Therefore, we assigned an LPN of 11 to this species.

Pseudognaphalium (*Gnaphalium*) *sandwicensium* var. *molokaiense* (Enaena) – The following summary is based on information contained in our files. No new information was provided in the petition we received on May 11, 2004. *Pseudognaphalium sandwicensium* var. *molokaiense* is a perennial herb found in strand vegetation in dry consolidated dunes on Molokai and Maui, Hawaii. This variety is known from a total of five populations totaling approximately 2,000 individuals in the Moomomi area on the island of Molokai, and from two populations of a few individuals at Waiehu dunes and at Puu Kahulianapa on west Maui. *Pseudognaphalium sandwicensium* var. *molokaiense* is threatened by axis deer and cattle that degrade and destroy habitat and possibly prey upon it, and by nonnative plants that compete for light and nutrients. Potential threats also include collection for lei and off-road vehicles that directly damage plants and degrade habitat. While ungulate exclusion fences protect one population on Molokai and nonnative plant control has been implemented in this population, no conservation efforts have been initiated to date for the other populations on Molokai or for the individuals on Maui. The ongoing threats from axis deer, cattle, nonnative plants, collection, and off-road vehicles are of a high magnitude because no control measures have been undertaken for the Maui population and the threats are significant to this plant. Therefore, we retained an LPN of 3 for this plant variety.

Psychotria hexandra ssp. *oahuensis* var. *oahuensis* (Kopiko) – We have not updated our assessment for this species, as we are currently developing a proposed listing rule.

Pteralyxia macrocarpa (Kaulu) – We have not updated our assessment for this species, as we are currently developing a proposed listing rule.

Ranunculus hawaiensis (Makou) – The following summary is based on information contained in our files. No new information was provided in the petition we received on May 11, 2004. *Ranunculus hawaiensis* is an erect or ascending perennial herb found in mesic to wet forest dominated by

Metrosideros polymorpha and *Acacia koa* with scree substrate on Maui and the island of Hawaii, Hawaii. Populations formerly within Haleakala National Park have been extirpated. This species is currently known from fewer than 12 individuals in 4 populations: three wild populations occur on Hawaii totaling 8 individuals; 1 wild population at Waikamoi (on Maui) was last observed in 1995, and the second Maui population (Kukui planeze) was not relocated on a survey conducted in 2006. *Ranunculus hawaiensis* is threatened by direct predation by slugs, feral pigs, goats, cattle, mouflon, and sheep; by pigs, goats, cattle, mouflon and sheep that degrade and destroy habitat; and by nonnative plants that compete for light and nutrients. Three populations have been outplanted into protected exclosures; however, feral ungulates and nonnative plants are not controlled in the remaining, unfenced populations. In addition, the threat from slugs is of a high magnitude because slugs occur throughout the limited range of this species and no effective measures have been undertaken to control them or prevent them from causing significant adverse impacts to this species. Therefore, the threats from pigs, goats, cattle, mouflon, sheep, slugs, and nonnative plants are of a high magnitude, and ongoing (imminent) for *R. hawaiensis*. We retained an LPN of 2 for this species.

Ranunculus mauiensis (Makou) – The following summary is based on information contained in our files. No new information was provided in the petition we received on May 11, 2004. *Ranunculus mauiensis* is an erect to weakly ascending perennial herb found in open sites in mesic to wet forest and along streams on the islands of Maui, Kauai, and Molokai, Hawaii. This species is currently known from 1 individual on Molokai, 60 individuals on Maui, and approximately 46 individuals on Kauai. *Ranunculus mauiensis* is threatened by feral pigs, goats, deer, and slugs that consume it; by habitat degradation and destruction by feral pigs, goats and deer; and by nonnative plants that compete for light and nutrients. Feral pigs have been fenced out of the Maui populations of *R. mauiensis*, and nonnative plants have been reduced in the fenced areas. One individual occurs in the Kamakou Preserve on Molokai, managed by The Nature Conservancy. However, ongoing conservation efforts benefit only the Maui and Molokai individuals, and absent conservation efforts for the Kauai individuals, the threats continue to be of a high magnitude on Kauai. Therefore, since half of the individuals are found on Kauai threats to the species overall are also of a high magnitude because these threats present a significant risk to the continued existence of *R. mauiensis*. In addition, the threats are imminent because they are ongoing in the Kauai and the majority of the Maui populations. Therefore, we retained an LPN of 2 for this species.

Rorippa subumbellata (Tahoe yellow cress) – The following summary is based on information contained in our files and the petition we received on December 27, 2000. Tahoe yellow cress is a small perennial herb known only from the shores of Lake Tahoe in California and Nevada. Data collected over the last 25 years generally indicate that species occurrence fluctuates yearly as a function of both lake level and the amount of exposed habitat. Records kept since 1900 show a preponderance of years with high lake levels that isolate and reduce Tahoe yellow cress occurrences at higher beach elevations. From the standpoint of the species, less favorable peak years have occurred almost twice as often as more favorable low-level years. Annual surveys are conducted to determine population numbers, site occupancy, and general disturbance regime. During the 2003 and 2004 annual survey period, the lake level was approximately 6,224 ft (1,898 m); 2004 was the fourth consecutive year of low water. Tahoe yellow cress was present at 45 of the 72 sites surveyed (65 percent occupied), up from 15 sites (19 percent occupied) in 2000 when the lake level was high at 6,228 ft. Approximately 25,200 stems were counted or estimated in 2003, whereas during the 2000 annual survey, the estimated number of stems was 4,590. Lake levels began to rise again in 2005 and less habitat was available; intermediate lake levels were expected in 2008.

Many Tahoe yellow cress sites are intensively used for commercial and public purposes and are subject to various activities such as erosion control, marina developments, pier construction, and recreation. The U.S. Forest Service, California Tahoe Conservancy, and California Department of Parks and Recreation have management programs for Tahoe yellow cress that include monitoring, fenced enclosures, and transplanting efforts when funds and staff are available. Public agencies (including the Service), private landowners, and environmental groups collaborated to develop a conservation strategy coupled with a Memorandum of Understanding/ Conservation Agreement. The conservation strategy, completed in 2003, contains goals and objectives for recovery and survival, a research and monitoring agenda, and will serve as the foundation for an adaptive management program. Because of the continued commitments to conservation demonstrated by regulatory and land management agencies participating in the conservation strategy, we have determined the threats to Tahoe yellow cress from various land uses are moderate in magnitude. In high lake level years such as 2005, however, recreational use is concentrated within Tahoe yellow cress habitat, and this threat in particular is ongoing and imminent. Therefore, we are maintaining an LPN of 8 for this species.

Schiedea pubescens (Maolioli) – The following summary is based on information contained in our files. No new information was provided in the petition we received on May 11, 2004. *Schiedea pubescens* is a reclining or weakly climbing vine found in diverse mesic to wet forest on Maui, Molokai, and Hawaii. Currently, this species is known from six populations totaling between 29 and 71 individuals on Maui, from four populations totaling 25 individuals on Molokai, and from one population of 4 to 6 individuals on the island of Hawaii. *Schiedea pubescens* is threatened by feral goats that consume it and degrade and destroy habitat, and by nonnative plants that compete for light and nutrients. Feral ungulates have been fenced out of the population of *S. pubescens* on Hawaii. Feral goats have been fenced out of a few of the west Maui populations of *S. pubescens*. Nonnative plants have been reduced in the populations that are fenced on Maui. However, the threats are not controlled and are ongoing in the remaining unfenced populations on Maui and the three populations on Molokai. In light of the extremely low number of individuals of this species, the threats from goats and nonnative plants are of a high magnitude because they pose a significant threat to the species, and imminent because they are ongoing with respect to most of the populations. Therefore, we retained an LPN of 2 for this species.

Schiedea salicaria (no common name) – The following summary is based on information contained in our files. No new information was provided in the petition we received on May 11, 2004. *Schiedea salicaria* is an erect subshrub or shrub found on ridges and steep slopes in dry shrubland on Maui, Hawaii. Currently, this species is declining throughout its range, and is known from four populations totaling approximately 260 individuals. This

species is threatened by cattle that may directly prey upon it and degrade and destroy habitat, fire, and nonnative plants that compete for light and nutrients. This species is represented in an *ex-situ* collection. All of the threats occur range-wide, and no efforts for their control or eradication are being undertaken. We retained an LPN of 2. The threats are imminent because they are ongoing, and they are of a high magnitude because, in light of their severity and the small size of the population, they have the potential to adversely affect the species.

Sedum eastwoodiae (Red Mountain stonecrop) – The following summary is based on information contained in our files and information provided by the California Department of Fish and Game. The petition we received on May 11, 2004 provided no new information on the species. Red Mountain stonecrop is a perennial succulent which occupies relatively barren, rocky openings and cliffs in lower montane coniferous forests, between 1,900 and 4,000 feet elevation. Its distribution is limited to Red Mountain, Mendocino County, California, where it occupies 30 acres scattered over 4 square miles. Total population size is estimated at between 5,300 and 23,000 plants, contained within 27 habitat polygons. Intensive monitoring suggests considerable annual variation in plant seedling success and inflorescence production; stonecrop density has varied from year-to-year. The primary threat to the species is the potential for surface mining for chromium and nickel. The entire distribution of Red Mountain stonecrop is either owned by mining interests, or is covered by mining claims; none of the claims are currently active and therefore the primary threat from mining is nonimminent. Surface mining would destroy habitat suitability for this species. The species is also believed threatened by tree and shrub encroachment into its habitat, in absence of fire. Given the high magnitude and nonimminent threats to the small, scattered populations of this plant species, we assigned an LPN of 5 to Red Mountain stonecrop.

Sicyos macrophyllus (Anunu) – The following summary is based on information contained in our files. No new information was provided in the petition we received on May 11, 2004. *Sicyos macrophyllus* is a perennial vine found in wet *Metrosideros polymorpha* (ohia) forest and subalpine *Sophora chrysophylla-Myoporum sandwicense* (mamane-naio) forest on the island of Hawaii, Hawaii. This species is known from 11 populations totaling fewer than 50 individuals in the Kohala and Mauna Kea areas and in Hawaii Volcanoes National Park (Puna area) on the island of Hawaii. It appears that a naturally occurring population at Kipuka Ki in Hawaii Volcanoes National Park is reproducing by seeds, but seeds have not been successfully germinated under nursery conditions. This species is threatened by feral pigs and sheep that degrade and destroy habitat, and nonnative plants that compete for light and nutrients. Feral pigs have been fenced out of some of the areas where *S. macrophyllus* currently occurs, but the fences do not exclude sheep. Nonnative plants have been reduced in the populations that are fenced. However, the threats are not controlled and are ongoing in the remaining, unfenced populations, and are, therefore, imminent. Similarly the threat from sheep is ongoing and imminent in all populations, because the current fences do not exclude sheep. In addition, all of the threats are of a high magnitude because habitat degradation and competition from nonnative plants present a risk to the species, resulting in direct mortality or significantly reducing the reproductive capacity. Therefore, we retained an LPN of 2 for this species.

Solanum nelsonii (popolo) – The following summary is based on information contained in our files. No new information was provided in the petition we received on May 11, 2004. *Solanum nelsonii* is a sprawling or trailing shrub found in coral rubble or sand in coastal sites. This species is known from populations in Molokai (approximately 300 plants) and the northwestern Hawaiian Islands: Midway (approximately 260 plants), Laysan (approximately 490 plants), Pearl and Hermes (unknown number of individuals), Nihoa (8,000 to 15,000 adult plants); and from five individuals last observed on the Island of Hawaii in 1995. On Molokai, *S. nelsonii* is moderately threatened by ungulates which degrade and destroy habitat, and that may eat it, and on Molokai and the northwestern Hawaiian Islands by nonnative plants that outcompete and displace it. Ungulate exclusion fences, routine fence monitoring and maintenance, and weed control protect the population of *S. nelsonii* on Molokai. Limited weed control is conducted in the northwestern Hawaiian Islands. In addition, *S. nelsonii* is likely threatened by being eaten by a nonnative grasshopper, *Schistocerca nitens*, in the northwestern Hawaiian Islands. Currently no control measures are in place for this grasshopper. These threats are of moderate magnitude because of the relatively large number of plants, and are imminent for the majority of the populations because they are ongoing and are not being controlled. We therefore retained an LPN of 8 for this species.

Stenogyne cranwelliae (no common name) – The following summary is based on information contained in our files. No new information was provided in the petition we received on May 11, 2004. *Stenogyne cranwelliae* is a creeping vine found in wet forest dominated by *Metrosideros polymorpha* on the island of Hawaii, Hawaii. *Stenogyne cranwelliae* is known from 11 populations totaling fewer than 100 individuals. This species is threatened by feral pigs that degrade and destroy habitat, and nonnative plants that compete for light and nutrients. In addition, this species is potentially threatened by rats that may directly prey upon it, and by randomly occurring natural events such as hurricanes and landslides. All of the threats occur range-wide, and no efforts for control or eradication are being undertaken for the pigs, nonnative plants, or rats. These threats are sufficient to adversely affect the species particularly in light of its small population size. We retained an LPN of 2 because the threats are of a high magnitude and are ongoing, so are imminent.

Symphyotrichum georgianum (Georgia aster) – The following summary is based on information contained in our files. No new information was provided in the petition we received on May 11, 2004. Georgia aster is a relict species of post oak savanna/prairie communities that existed across much of the southeast prior to widespread fire suppression and extirpation of large native grazing animals. Most remaining populations survive adjacent to roads, utility rights-of-way, and other openings where current land management mimics natural disturbance regimes. Georgia aster currently occurs in the states of Alabama, Georgia, North Carolina and South Carolina. The species is presumed extant in three counties in Alabama, ten counties in Georgia, nine counties in North Carolina, and eleven counties in South Carolina. The species appears to have been eliminated from Florida. Most populations are small (10-100 stems), and, since the species' main mode of reproduction is vegetative, each isolated population may represent only a few genotypes.

Many populations are threatened by one or more of the following factors: woody succession due to fire suppression, development, highway

expansion/improvement, and herbicide application. These threats are currently occurring (and are therefore imminent). These threats are expected to continue to operate throughout the range of the species; however, data on the frequency, timing, and consequences of these threats are lacking. Based upon data on other rare plant species, some of which are federally listed, occurring in similar habitats and possessing similar life histories, it is not currently expected that these threats are likely to be irreversible (e.g., to result in the extirpation of populations). Therefore, the ongoing threats are of moderate to low magnitude, and we assigned an LPN of 8 to this species.

Zanthoxylum oahuense (Ae) – We have not updated our assessment for this species, as we are currently developing a proposed listing rule.

Ferns and Allies

Christella boydiae (no common name) – The following summary is based on information contained in our files. No new information was provided in the petition we received on May 11, 2004. This species is a small- to medium-sized fern found in mesic to wet forest along streambanks on Oahu and Maui, Hawaii. Historically, this species was also found on the island of Hawaii, but it has been extirpated there. Currently, this species is known from five populations totaling 316 individuals. This species is threatened by feral pigs which degrade and/or destroy habitat and that may eat this plant, nonnative plants that compete for light and nutrients, and stream diversion. Feral pigs have been fenced out of the largest population on Maui, and nonnative plants have been reduced in the fenced area. No conservation efforts are under way to alleviate threats to the other two populations on Maui, or for the two populations on Oahu. The magnitude of the threats acting upon the currently extant populations is moderate because the largest population is protected from pigs, and nonnative plants have been reduced in this area. The threats are ongoing and therefore imminent. Therefore, we retained an LPN of 8 for this species.

Doryopteris takeuchii (no common name) – We have not updated our assessment for this species, as we are currently developing a proposed listing rule for this species.

Huperzia stemmermanniae (Waewaeiole) – The following summary is based on information contained in our files. No new information was provided in the petition we received on May 11, 2004. This species is a pendant clubmoss found in mesic to wet *Metrosideros polymorpha-Acacia koa* (ohia-koa) forests on the islands of Maui and Hawaii, Hawaii. Only four populations are known, totaling 19 to 29 individuals on Hawaii and Maui. *Huperzia stemmermanniae* is threatened by feral pigs, goats, cattle, and deer that degrade and/or destroy habitat, and by nonnative plants that compete for light, space, and nutrients. It is also threatened by randomly occurring natural events due to its small population size. One individual at Waikamoi Preserve may benefit from fencing for deer and pigs. The threats from pigs, goats, cattle, deer, and nonnative plants are of a high magnitude because they are sufficiently severe to adversely affect the species throughout its limited range, resulting in direct mortality or significantly reducing reproductive capacity. The threats are imminent because they are ongoing. Therefore, we retained an LPN of 2 for this species.

Microlepia strigosa var. *mauiensis* (Palapalai) – The following summary is based on information contained in our files. No new information was provided in the petition we received on May 11, 2004. Palapalai is a fern found in mesic to wet forests. It is currently found on the islands of Maui, Hawaii, and Oahu, from at least 10 populations totaling at least 46 individuals. There is a possibility that the range of this plant variety could be larger and include the other main Hawaiian Islands. *Microlepia strigosa* var. *mauiensis* is threatened by feral pigs that degrade and destroy habitat, and nonnative plants that compete for light and nutrients. Pigs have been fenced out of areas on east and west Maui, and on Hawaii, where *M. strigosa* var. *mauiensis* currently occurs, and nonnative plants have been reduced in the fenced areas. However, the threats are not controlled and are ongoing in the remaining unfenced populations on Maui, Hawaii, and Oahu. Therefore, the threats from feral pigs and nonnative plants are imminent. The threats are of a high magnitude because they are sufficiently severe to adversely affect the species throughout its range, resulting in direct mortality or significantly reducing reproductive capacity. We therefore retained an LPN of 3 for *M. strigosa* var. *mauiensis*.

Petitions To Reclassify Species Already Listed

We previously made warranted-but-precluded findings on five petitions seeking to reclassify threatened species to endangered status. The taxa involved are three populations of the grizzly bear (*Ursus arctos horribilis*), the spikedace (*Meda fulgida*), and the loach minnow (*Tiaroga cobitis*). Because these species are already listed under the Act, they are not candidates for listing and are not included in Table 1. However, this notice and associated species assessment forms also constitute the resubmitted petition findings for these species. For the three grizzly bear populations, we have not updated our assessments through this notice as explained below. Pending the completion of an ongoing review of the status of the grizzly bear in the lower 48 States outside of the Greater Yellowstone Areas (see below), we continue to find that reclassification to endangered for each of the three populations (described below) is warranted but precluded by work indentified above (see ''*Petition Findings for Candidate Species* ''). For the spikedace and loach minnow, our updated assessments are provided below. We find that reclassification to endangered status for both the spikedace and loach minnow is currently warranted but precluded by work identified above (see ''*Petition Findings for Candidate Species* ''). One of the primary reasons that the work identified above is higher priority is that the grizzly bear populations, spikedace, and loach minnow are currently listed as threatened, and therefore already receive certain protections under the Act. The Service promulgated regulations extending take prohibitions for endangered species under section 9 to threatened species (50 CFR 17.31). Prohibited actions under section 9 include, but are not limited to, take (i.e., to harass, harm, pursue, hunt, shoot, wound, kill, trap, capture, or collect, or attempt to engage in such activity). Other protections include those under section 7(a)(2) of the Act whereby Federal agencies must insure that any action they authorize, fund, or carry out is not likely to jeopardize the continued existence of any endangered or threatened species.

Grizzly bear (*Ursus arctos horribilis*) North Cascades ecosystem, Cabinet-Yaak, and Selkirk populations (Region 6) – We have not updated our finding with regard to these grizzly bear populations in this notice. Between 1991 and 1999, we issued warranted but precluded findings to reclassify grizzly bears as endangered in the North Cascades (56 FR 33892-33894, July 24, 1991; 63 FR 30453-30454, June 4, 1998), the Cabinet-Yaak (58 FR 8250-8251, February 12, 1993; 64 FR 26725-26733, May 17, 1999), and the Selkirk Ecosystems (64 FR 26725-26733, May 17, 1999). We also made resubmitted

petition findings that uplisting these three populations to endangered was warranted but precluded through previous CNORs (most recently on September 12, 2006; 71 FR 53755). However, none of the findings included a formal analysis under our 1996 Policy Regarding the Recognition of Distinct Vertebrate Population Segments (DPS) under the Endangered Species Act (61 FR 4722-4725, February 7, 1996). Under this policy a formal analysis of discreteness and significance is necessary to determine if the entity is a ''listable entity.'' While our 1999 revised 12–month finding performed a preliminary DPS analysis, it appears to have incorrectly analyzed significance to the listed entity (i.e. grizzly bears in the lower 48 States) instead of significance to the taxon (*Ursus arctos horribilis*) as required by our DPS policy (64 FR 26725-26733, May 17, 1999; 61 FR 4722-4725, February 7, 1996; *National Association of Home Builders* v. *Norton*, 340 F. 3d 835, 852 (9th Cir. 2003)). Additionally, emerging biological information now suggests increasing levels of connectivity among some of these populations, casting doubt on their discreteness.

Also relevant is the March 16, 2007, Department of the Interior Office of the Solicitor memorandum (available at: *http://www.doi.gov/solicitor/opinions/M37013.pdf*) regarding the meaning of ''significant portion of [a species'] range.'' This memorandum states that ''whenever the Secretary concludes because of the statutory five-factor analysis that a species is 'in danger of extinction throughout...a significant portion of its range,' it is to be listed and the protections of the ESA applied to the species in that portion of its range.'' The memorandum goes on to say, ''the Secretary has broad discretion in defining what portion of a range is 'significant.''' To date, the Service has not determined whether the North Cascade, the Cabinet-Yaak, or the Selkirk Ecosystems each constitutes a significant portion of the grizzly bear's range or whether they only represent significant portions of the species' range when combined with other units.

On April 18, 2007, the Service initiated a 5–year review to evaluate the current status of grizzly bears in the lower 48-States outside of the Greater Yellowstone Area (72 FR 19549-19551). This status review will fully evaluate the status of each population and the appropriate application of the DPS policy and the Solicitor memorandum regarding recognition and listing of significant portions of range. We expect this 5–year review to be completed in FY 2009. We will use information from that review to update our findings for the petitions to reclassify the three grizzly bear populations.

Spikedace (*Meda fulgida*) (Region 2) (see 59 FR 35303, July 11, 1994, and the species assessment form (see **ADDRESSES**) for additional information on why reclassification to endangered is warranted-but-precluded) – The spikedace, a small fish species in a monotypic genus, is found in moderate-to-large perennial waters, where it inhabits shallow riffles with sand, gravel, and rubble substrates, and moderate-to-swift currents and swift pools over sand or gravel substrates. This species is now relatively common only in Aravaipa Creek and portions of the upper Gila River in New Mexico. Smaller, less stable populations occur in some areas of the upper Gila, as well as in the Verde River.

The threats to this species are primarily from nonnative aquatic species and water withdrawals, including groundwater pumping. Other threats include grazing, road construction, and recreation. Spikedace occur in only 5 to 10 percent of their historical range, and threats occur over the majority of their range to varying degrees. Threats are exacerbated by ongoing drought. In addition, different threats can interact with each other to cause further decline. For example, drought and water withdrawals may decrease the amount of habitat available to all species within a given stream, forcing natives and nonnatives into closer proximity to one another. Effects from nonnative species introductions are permanent, unless streams are actively renovated and/or barriers installed to preclude further recolonization by nonnatives. Grazing pressures have eased somewhat as Federal agencies remove cattle from streams directly, but upland conditions continue to degrade watersheds in general. Groundwater withdrawals or exchanges that affect streamflow are not reversible. For these reasons, the magnitude of the threat to this species is high. In addition, most of the threats to this species are ongoing, in particular grazing, water withdrawals, nonnative stocking programs, recreational use, and drought. Because threats have gone on for many years in the past, are associated with irreversible commitments (i.e., water exchanges), or are not easily reversed (i.e., nonnative stocking and impacts from grazing), the threats to the species are imminent. Therefore, we assigned this species an LPN of 1 for uplisting to endangered.

Loach minnow (*Tiaroga cobitis*) (Region 2) (see 59 FR 35303, July 11, 1994, and the species assessment form (see **ADDRESSES**) for additional information on why reclassification to endangered is warranted-but-precluded) – This small fish, the only species within the genus, is found in small-to-large perennial streams and uses shallow, turbulent riffles with primarily cobble substrate and swift currents. This species is now common only in Aravaipa Creek and the Blue River in Arizona, and limited portions of the San Francisco, upper Gila, and Tularosa rivers in New Mexico. Smaller, less stable populations occur in some areas of the upper Gila, such as the Middle Fork and in small areas of several tributary streams to Aravaipa Creek and the Blue and Tularosa rivers, such as Pace, Frieborn, Negrito, Turkey, and Deer creeks. Small populations are also present in Eagle Creek and the Black River.

The threats to this species are primarily from nonnative aquatic species and water withdrawals, including groundwater pumping. Other threats include grazing, road construction, and recreation. Loach minnow occur in only 10 to 15 percent of their historic range, and threats occur over the majority of their range, to varying degrees. Threats are exacerbated by ongoing drought. In addition, different threats can interact with each other to cause further decline. For example, drought and water withdrawals may decrease the amount of habitat available to all species within a given stream, bringing natives and nonnatives into closer contact. Effects from nonnative species introductions are permanent, unless streams are actively renovated and/or barriers installed to preclude further recolonization by nonnatives. Grazing pressures have eased somewhat as Federal agencies remove cattle from streams directly, but upland conditions continue to degrade watersheds in general. Groundwater withdrawals or exchanges that affect streamflow are not reversible. For these reasons, the magnitude of the threats to this species is high. In addition, most of the threats to this species are ongoing, in particular grazing, water withdrawals, nonnative stocking programs, recreational use, and drought. Because threats have gone on for many years in the past, are associated with irreversible commitments (i.e., water exchanges), or are not easily reversed (i.e., nonnative stocking and impactsfrom grazing), the threats to this species are imminent. Therefore, we assigned this species an LPN of 1 for uplisting to endangered.

Current Notice of Review

We gather data on plants and animals native to the U.S. that appear to merit consideration for addition to the Lists of Endangered and Threatened Wildlife and Plants. This notice identifies those species that we currently regard as candidates for addition to the Lists. These candidates include species and subspecies of fish, wildlife, or plants and DPSs of vertebrate animals. This compilation relies on information from status surveys conducted for candidate assessment and on information from State Natural Heritage Programs, other State and Federal agencies, knowledgeable scientists, public and private natural resource interests, and comments received in response to previous notices of review.

Tables 1 and 2 list animals arranged alphabetically by common names under the major group headings, and list plants alphabetically by names of genera, species, and relevant subspecies and varieties. Animals are grouped by class or order. Plants are subdivided into two groups: (1) flowering plants and (2) ferns and their allies. Useful synonyms and subgeneric scientific names appear in parentheses with the synonyms preceded by an ''equals'' sign. Several species that have not yet been formally described in the scientific literature are included; such species are identified by a generic or specific name (in italics), followed by ''sp.'' or ''ssp.'' We incorporate standardized common names in these notices as they become available. We sorted plants by scientific name due to the inconsistencies in common names, the inclusion of vernacular and composite subspecific names, and the fact that many plants still lack a standardized common name.

Table 1 lists all candidate species plus species currently proposed for listing under the Act. We emphasize that in this notice we are not proposing to list any of the candidate species; rather, we will develop and publish proposed listing rules for these species in the future. We encourage State agencies, other Federal agencies, and other parties to give consideration to these species in environmental planning.

In Table 1, the ''category'' column on the left side of the table identifies the status of each species according to the following codes:

PE - Species proposed for listing as endangered. Proposed species are those species for which we have published a proposed rule to list as endangered or threatened in the **Federal Register**. This category does not include species for which we have withdrawn or finalized the proposed rule.

PT - Species proposed for listing as threatened.

PSAT – Species proposed for listing as threatened due to similarity of appearance.

C - Candidates: Species for which we have on file sufficient information on biological vulnerability and threats to support proposals to list them as endangered or threatened. Issuance of proposed rules for these species is precluded at present by other higher-priority listing actions. This category includes species for which we made a 12–month warranted-but-precluded finding on a petition to list. We made new findings on all petitions for which we previously made ''warranted-but-precluded'' findings. We identify the species for which we made a continued warranted-but-precluded finding on a resubmitted petition by the code ''C*'' in the category column (see ''Findings on Resubmitted Petitions'' section for additional information).

The ''Priority'' column indicates the LPN for each candidate species which we use to determine the most appropriate use of our available resources. The lowest numbers have the highest priority. We assign LPNs based on the immediacy and magnitude of threats as well as on taxonomic status. We published a complete description of our listing priority system in the **Federal Register** (48 FR 43098, September 21, 1983).

The third column, ''Lead Region,'' identifies the Regional Office to which you should direct information, comments, or questions (see addresses at the end of the **SUPPLEMENTARY INFORMATION** section).

Following the scientific name (fourth column) and the family designation (fifth column) is the common name (sixth column). The seventh column provides the known historic range for the species or vertebrate population (for vertebrate populations, this is the historic range for the entire species or subspecies and not just the historic range for the distinct population segment), indicated by postal code abbreviations for States and U.S. territories. Many species no longer occur in all of the areas listed.

Species in Table 2 of this notice are those we included either as proposed species or as candidates in the previous CNOR (published December 6, 2007) that are no longer proposed species or candidates for listing. Since December 6, 2007, we removed one species from proposed status and removed three species from candidate status for the reasons indicated by the codes. The first column indicates the present status of each species, using the following codes (not all of these codes may have been used in this CNOR):

E - Species we listed as endangered.

T - Species we listed as threatened.

Rc - Species we removed from the candidate list because currently available information does not support a proposed listing.

Rp - Species we removed from the candidate list because we have withdrawn the proposed listing.

The second column indicates why we no longer regard the species as a candidate or proposed species using the following codes (not all of these codes may have been used in this CNOR):

A - Species that are more abundant or widespread than previously believed and species that are not subject to the degree of threats sufficient to warrant continuing candidate status, or issuing a proposed or final listing.

F - Species whose range no longer includes a U.S. territory.

I - Species for which we have insufficient information on biological vulnerability and threats to support issuance of a proposed rule to list.

L - Species we added to the Lists of Endangered and Threatened Wildlife and Plants.

M - Species we mistakenly included as candidates or proposed species in the last notice of review.

N - Species that are not listable entities based on the Act's definition of ''species'' and current taxonomic understanding.

U - Species that are not subject to the degree of threats sufficient to warrant issuance of a proposed listing or continuance of candidate status due, in part or totally, to conservation efforts that remove or reduce the threats to the species.

X - Species we believe to be extinct.

The columns describing lead region, scientific name, family, common name, and historical range include information as previously described for Table 1.

Request for Information

We request you submit any further information on the species named in this notice as soon as possible or whenever it becomes available. We are particularly interested in any information:

(1) indicating that we should add a species to the list of candidate species;

(2) indicating that we should remove a species from candidate status;

(3) recommending areas that we should designate as critical habitat for a species, or indicating that designation of critical habitat would not be prudent for a species;

(4) documenting threats to any of the included species;

(5) describing the immediacy or magnitude of threats facing candidate species;

(6) pointing out taxonomic or nomenclature changes for any of the species;

(7) suggesting appropriate common names; and

(8) noting any mistakes, such as errors in the indicated historical ranges.

Submit information, materials, or comments regarding a particular species to the Regional Director of the Region identified as having the lead responsibility for that species. The regional addresses follow:

Region 1. Hawaii, Idaho, Oregon, Washington, American Samoa, Guam, and Commonwealth of the Northern Mariana Islands. Regional Director (TE), U.S. Fish and Wildlife Service, Eastside Federal Complex, 911 N.E. 11th Avenue, Portland, OR 97232-4181 (503/231-6158).

Region 2. Arizona, New Mexico, Oklahoma, and Texas. Regional Director (TE), U.S. Fish and Wildlife Service, 500 Gold Avenue SW., Room 4012, Albuquerque, NM 87102 (505/248-6920).

Region 3. Illinois, Indiana, Iowa, Michigan, Minnesota, Missouri, Ohio, and Wisconsin. Regional Director (TE), U.S. Fish and Wildlife Service, Bishop Henry Whipple Federal Building, One Federal Drive, Fort Snelling, MN 55111-4056 (612/713-5334).

Region 4. Alabama, Arkansas, Florida, Georgia, Kentucky, Louisiana, Mississippi, North Carolina, South Carolina, Tennessee, Puerto Rico, and the U.S. Virgin Islands. Regional Director (TE), U.S. Fish and Wildlife Service, 1875 Century Boulevard, Suite 200, Atlanta, GA 30345 (404/679-4156).

Region 5. Connecticut, Delaware, District of Columbia, Maine, Maryland, Massachusetts, New Hampshire, New Jersey, New York, Pennsylvania, Rhode Island, Vermont, Virginia, and West Virginia. Regional Director (TE), U.S. Fish and Wildlife Service, 300 Westgate Center Drive, Hadley, MA 01035-9589 (413/253-8615).

Region 6. Colorado, Kansas, Montana, Nebraska, North Dakota, South Dakota, Utah, and Wyoming. Regional Director (TE), U.S. Fish and Wildlife Service, P.O. Box 25486, Denver Federal Center, Denver, CO 80225-0486 (303/236-7400).

Region 7. Alaska. Regional Director (TE), U.S. Fish and Wildlife Service, 1011 East Tudor Road, Anchorage, AK 99503-6199 (907/786-3505).

Region 8. California and Nevada. Regional Director (TE), U.S. Fish and Wildlife Service, 2800 Cottage Way, Suite W2606, Sacramento, CA 95825 (916/414-6464)

We will provide information received in response to the previous CNOR to the Region having lead responsibility for each candidate species mentioned in the submission. We will likewise consider all information provided in response to this CNOR in deciding whether to propose species for listing and when to undertake necessary listing actions (including whether emergency listing pursuant to section 4(b)(7) of the Act is appropriate). Information and comments we receive will become part of the administrative record for the species, which we maintain at the appropriate Regional Office.

Before including your address, phone number, e-mail address, or other personal identifying information in your submission, be advised that your entire submission – including your personal identifying information – may be made publicly available at any time. While you can ask us in your submission to withhold from public review your personal indentifying information, we cannot guarantee that we will be able to do so.

Authority

This notice is published under the authority of the Endangered Species Act (16 U.S.C. 1531 *et seq.*).

Dated: November 26, 2008

Rowan W. Gould

Deputy Director, Fish and Wildlife Service

Table 1. - Candidate Notice of Review (Animals and Plants)

Note: See end of SUPPLEMENTARY INFORMATION for an explanation of symbols used in this table.

Status		Lead region	Scientific name	Family	Common name	Historic range
Category	Priority					
MAMMALS						
C*	3	R1	*Emballonura semicaudata rotensis*	Emballonuridae	Bat, Pacific sheath-tailed (Mariana Islands subspecies)	U.S.A. (GU, CNMI)
C*	3	R1	*Emballonura semicaudata semicaudata*	Emballonuridae	Bat, Pacific sheath-tailed (American Samoa DPS)	U.S.A. (AS), Fiji, Independent Samoa, Tonga, Vanuatu
C*	2	R5	*Sylvilagus transitionalis*	Leporidae	Cottontail, New England	U.S.A. (CT, MA, ME, NH, NY, RI, VT)
C*	6	R8	*Martes pennanti*	Mustelidae	Fisher (west coast DPS)	U.S.A. (CA, CT, IA, ID, IL, IN, KY, MA, MD,ME, MI, MN, MT, ND, NH, NJ, NY, OH, OR, PA, RI, TN, UT, VA, VT, WA, WI, WV, WY), Canada
C*	3	R2	*Zapus hudsonius luteus*	Zapodidae	Mouse, New Mexico meadow jumping	U.S.A. (AZ, CO, NM)
C*	3	R1	*Thomomys mazama couchi*	Geomyidae	Pocket gopher, Shelton	U.S.A. (WA)
C	3	R1	*Thomomys mazama douglasii*	Geomyidae	Pocket gopher, Brush Prairie	U.S.A. (WA)
C*	3	R1	*Thomomys mazama glacialis*	Geomyidae	Pocket gopher, Roy Prairie	U.S.A. (WA)
C*	3	R1	*Thomomys mazama louiei*	Geomyidae	Pocket gopher, Cathlamet	U.S.A. (WA)

Table 1. - Candidate Notice of Review (Animals and Plants)—Continued

Note: See end of SUPPLEMENTARY INFORMATION for an explanation of symbols used in this table.

Status		Lead region	Scientific name	Family	Common name	Historic range
Category	Priority					
C*	3	R1	*Thomomys mazama melanops*	Geomyidae	Pocket gopher, Olympic	U.S.A. (WA)
C*	3	R1	*Thomomys mazama pugetensis*	Geomyidae	Pocket gopher, Olympia	U.S.A. (WA)
C*	3	R1	*Thomomys mazama tacomensis*	Geomyidae	Pocket gopher, Tacoma	U.S.A. (WA)
C*	3	R1	*Thomomys mazama tumuli*	Geomyidae	Pocket gopher, Tenino	U.S.A. (WA)
C*	3	R1	*Thomomys mazama yelmensis*	Geomyidae	Pocket gopher, Yelm	U.S.A. (WA)
C*	3	R6	*Cynomys gunnisoni*	Sciuridae	Prairie dog, Gunnison's (central and south-central Colorado, north-central New Mexico SPR)	U.S.A. (CO, NM)
C*	3	R8	*Spermophilus tereticaudus chlorus*	Sciuridae	Squirrel, Palm Springs (= Coachella Valley) round-tailed ground	U.S.A. (CA)
C*	9	R1	*Spermophilus brunneus endemicus*	Sciuridae	Squirrel, Southern Idaho ground	U.S.A. (ID)
C*	5	R1	*Spermophilus washingtoni*	Sciuridae	Squirrel, Washington ground	U.S.A. (WA, OR)
BIRDS						
PE	-	R1	*Loxops caeruleirostris*	Fringillidae	Akekee (honeycreeper)	U.S.A. (HI)
PE	2	R1	*Oreomystis bairdi*	Fringillidae	Akikiki (Kauai creeper)	U.S.A. (HI)
C*	3	R1	*Porzana tabuensis*	Rallidae	Crake, spotless (American Samoa DPS)	U.S.A. (AS), Australia, Fiji, Independent Samoa, Marquesas, Philippines, Society Islands, Tonga
C*	3	R8	*Coccyzus americanus*	Cuculidae	Cuckoo, yellow-billed (Western U.S. DPS)	U.S.A. (Lower 48 States), Canada, Mexico, Central and South America
C*	9	R1	*Gallicolumba stairi*	Columbidae	Ground-dove, friendly (American Samoa DPS)	U.S.A. (AS), Independent Samoa
C*	3	R1	*Eremophila alpestris strigata*	Alaudidae	Horned lark, streaked	U.S.A. (OR, WA), Canada (BC)
C*	3	R5	*Calidris canutus rufa*	Scolopacidae	Knot, red	U.S.A. (Atlantic coast), Canada, South America
C*	2	R7	*Brachyramphus brevirostris*	Alcidae	Murrelet, Kittlitz's	U.S.A. (AK), Russia.
C*	5	R8	*Synthliboramphus hypoleucus*	Alcidae	Murrelet, Xantus's	U.S.A. (CA), Mexico
C*	2	R2	*Tympanuchus pallidicinctus*	Phasianidae	Prairie-chicken, lesser	U.S.A. (CO, KA, NM, OK, TX)
C*	6	R1	*Centrocercus urophasianus*	Phasianidae	Sage-grouse, greater (Columbia Basin DPS)	U.S.A. (AZ, CA, CO, ID, MT, ND, NE, NV, OR, SD, UT, WA, WY), Canada (AB, BC, SK)
C*	3	R1	*Oceanodroma castro*	Hydrobatidae	Storm-petrel, band-rumped (Hawaii DPS)	U.S.A. (HI), Atlantic Ocean, Ecuador (Galapagos Islands), Japan
C*	5	R4	*Dendroica angelae*	Emberizidae	Warbler, elfin-woods	U.S.A. (PR)
REPTILES						
C*	3	R2	*Thamnophis eques megalops*	Colubridae	Gartersnake, northern Mexican	U.S.A. (AZ, NM, NV), Mexico

Table 1. - Candidate Notice of Review (Animals and Plants)—Continued

Note: See end of SUPPLEMENTARY INFORMATION for an explanation of symbols used in this table.

Status		Lead region	Scientific name	Family	Common name	Historic range
Category	Priority					
C*	2	R2	*Sceloporus arenicolus*	Iguanidae	Lizard, sand dune	U.S.A. (TX, NM)
C*	9	R3	*Sistrurus catenatus catenatus*	Viperidae	Massasauga (=rattlesnake), eastern	U.S.A. (IA, IL, IN, MI, MO, MN, NY, OH, PA, WI), Canada
C*	3	R4	*Pituophis melanoleucus lodingi*	Colubridae	Snake, black pine	U.S.A. (AL, LA, MS)
C*	5	R4	*Pituophis ruthveni*	Colubridae	Snake, Louisiana pine	U.S.A. (LA, TX)
C*	3	R2	*Kinosternon sonoriense longifemorale*	Kinosternidae	Turtle, Sonoyta mud	U.S.A. (AZ), Mexico
AMPHIBIANS						
C*	9	R8	*Rana luteiventris*	Ranidae	Frog, Columbia spotted (Great Basin DPS)	U.S.A. (AK, ID, MT, NV, OR, UT, WA, WY), Canada (BC)
C*	3	R8	*Rana muscosa*	Ranidae	Frog, mountain yellow-legged (Sierra Nevada DPS)	U.S.A (CA, NV)
C*	2	R1	*Rana pretiosa*	Ranidae	Frog, Oregon spotted	U.S.A. (CA, OR, WA), Canada (BC)
C*	11	R8	*Rana onca*	Ranidae	Frog, relict leopard	U.S.A. (AZ, NV, UT)
C*	3	R3	*Cryptobranchus alleganiensis bishopi*	Crytobranchidae	Hellbender, Ozark	U.S.A. (AR, MO)
C*	2	R2	*Eurycea waterlooensis*	Plethodontidae	Salamander, Austin blind	U.S.A. (TX)
C*	8	R2	*Eurycea naufragia*	Plethodontidae	Salamander, Georgetown	U.S.A. (TX)
C*	8	R2	*Eurycea tonkawae*	Plethodontidae	Salamander, Jollyville Plateau	U.S.A. (TX)
C*	2	R2	*Eurycea chisholmensis*	Plethodontidae	Salamander, Salado	U.S.A. (TX)
C*	11	R8	*Bufo canorus*	Bufonidae	Toad, Yosemite	U.S.A. (CA)
C	3	R2	*Hyla wrightorum*	Hylidae	Treefrog, Arizona (Huachuca/Canelo DPS)	U.S.A. (AZ), Mexico (Sonora)
C*	8	R4	*Necturus alabamensis*	Proteidae	Waterdog, black warrior (=Sipsey Fork)	U.S.A. (AL)
FISHES						
C*	8	R2	*Gila nigra*	Cyprinidae	Chub, headwater	U.S.A. (AZ, NM)
C	5	R4	*Phoxinus saylori*	Cyprinidae	Dace, laurel	U.S.A. (TN)
C*	11	R6	*Etheostoma cragini*	Percidae	Darter, Arkansas	U.S.A. (AR, CO, KS, MO, OK)
C*	5	R4	*Etheostoma susanae*	Percidae	Darter, Cumberland	U.S.A. (KY, TN)
C*	5	R4	*Percina aurora*	Percidae	Darter, Pearl	U.S.A. (LA, MS)
C*	2	R4	*Etheostoma phytophilum*	Percidae	Darter, rush	U.S.A. (AL)
C*	2	R4	*Etheostoma moorei*	Percidae	Darter, yellowcheek	U.S.A (AR)
C*	2	R4	*Noturus crypticus*	Ictaluridae	Madtom, chucky	U.S.A. (TN)
C	5	R4	*Moxostoma* sp.	Catostomidae	Redhorse, sicklefin	U.S.A. (GA, NC, TN)
C*	2	R3	*Cottus* sp.	Cottidae	Sculpin, grotto	U.S.A. (MO)
C*	5	R2	*Notropis oxyrhynchus*	Cyprinidae	Shiner, sharpnose	U.S.A. (TX)
C*	5	R2	*Notropis buccula*	Cyprinidae	Shiner, smalleye	U.S.A. (TX)
C*	3	R2	*Catostomus discobolus yarrowi*	Catostomidae	Sucker, Zuni bluehead	U.S.A. (AZ, NM)
PSAT	N/A	R1	*Salvelinus malma*	Salmonidae	Trout, Dolly Varden	U.S.A. (AK, WA), Canada, East Asia

Table 1. - Candidate Notice of Review (Animals and Plants)—Continued

Note: See end of SUPPLEMENTARY INFORMATION for an explanation of symbols used in this table.

Status		Lead region	Scientific name	Family	Common name	Historic range
Category	Priority					
C*	9	R2	*Oncorhynchus clarki virginalis*	Salmonidae	Trout, Rio Grande cutthroat	U.S.A. (CO, NM)
CLAMS						
C	5	R4	*Villosa choctawensis*	Unionidae	Bean, Choctaw	U.S.A. (AL, FL)
C	2	R3	*Villosa fabalis*	Unionidae	Bean, rayed	U.S.A. (IL, IN, KY, MI, NY, OH, TN, PA, VA, WV), Canada (ON)
C	2	R4	*Fusconaia rotulata*	Unionidae	Ebonyshell, round	U.S.A. (AL, FL)
C*	8	R2	*Popenaias popei*	Unionidae	Hornshell, Texas	U.S.A. (NM, TX), Mexico
C*	2	R4	*Ptychobranchus subtentum*	Unionidae	Kidneyshell, fluted	U.S.A. (AL, KY, TN, VA)
C	2	R4	*Ptychobranchus jonesi*	Unionidae	Kidneyshell, southern	U.S.A. (AL, FL)
C*	5	R4	*Lampsilis rafinesqueana*	Unionidae	Mucket, Neosho	U.S.A. (AR, KS, MO, OK)
C	2	R3	*Plethobasus cyphyus*	Unionidae	Mussel, sheepnose	U.S.A. (AL, IA, IL, IN, KY, MN, MO, MS, OH, PA, TN, VA, WI, WV)
C*	2	R4	*Margaritifera marrianae*	Margaritiferidae	Pearlshell, Alabama	U.S.A. (AL)
C*	2	R4	*Lexingtonia dolabelloides*	Unionidae	Pearlymussel, slabside	U.S.A. (AL, KY, TN, VA)
C	5	R4	*Pleurobema strodeanum*	Unionidae	Pigtoe, fuzzy	U.S.A. (AL, FL)
C*	2	R4	*Pleurobema hanleyianum*	Unionidae	Pigtoe, Georgia	U.S.A. (AL, GA, TN)
C	5	R4	*Fusconaia escambia*	Unionidae	Pigtoe, narrow	U.S.A. (AL, FL)
C	11	R4	*Fusconaia* (=*Quincuncina*) *burkei*	Unionidae	Pigtoe, tapered	U.S.A. (AL, FL)
C	5	R4	*Hamiota* (=*Lampsilis*) *australis*	Unionidae	Sandshell, southern	U.S.A. (AL, FL)
C	4	R3	*Cumberlandia monodonta*	Margaritiferidae	Spectaclecase	U.S.A. (AL, AR, IA, IN, IL, KS, KY, MO, MN, NE, OH, TN, VA, WI, WV)
C*	2	R4	*Elliptio spinosa*	Unionidae	Spinymussel, Altamaha	U.S.A. (GA)
SNAILS						
C	2	R4	*Pleurocera foremani*	Pleuroceridae	Hornsnail, rough	U.S.A. (AL)
C	8	R4	*Elimia melanoides*	Pleuroceridae	Mudalia, black	U.S.A. (AL)
C*	11	R6	*Stagnicola bonnevillensis*	Lymnaeidae	Pondsnail, fat-whorled (=Bonneville)	U.S.A. (UT)
C*	2	R4	*Leptoxis foremani* (=*downei*)	Pleuroceridae	Rocksnail, Interrupted (= Georgia)	U.S.A. (GA, AL)
C*	2	R1	*Ostodes strigatus*	Potaridae	Sisi snail	U.S.A. (AS)
C*	2	R2	*Pseudotryonia adamantina*	Hydrobiidae	Snail, Diamond Y Spring	U.S.A. (TX)
C*	2	R1	*Samoana fragilis*	Partulidae	Snail, fragile tree	U.S.A. (GU, MP)
C*	2	R1	*Partula radiolata*	Partulidae	Snail, Guam tree	U.S.A. (GU)
C*	2	R1	*Partula gibba*	Partulidae	Snail, Humped tree	U.S.A. (GU, MP)
C*	2	R1	*Partulina semicarinata*	Achatinellidae	Snail, Lanai tree	U.S.A. (HI)
C*	2	R1	*Partulina variabilis*	Achatinellidae	Snail, Lanai tree	U.S.A. (HI)
C*	2	R1	*Partula langfordi*	Partulidae	Snail, Langford's tree	U.S.A. (MP)
C*	2	R2	*Cochliopa texana*	Hydrobiidae	Snail, Phantom cave	U.S.A. (TX)

Table 1. - Candidate Notice of Review (Animals and Plants)—Continued

Note: See end of SUPPLEMENTARY INFORMATION for an explanation of symbols used in this table.

Status		Lead region	Scientific name	Family	Common name	Historic range
Category	Priority					
C*	2	R1	*Newcombia cumingi*	Achatinellidae	Snail, Newcomb's tree	U.S.A. (HI)
C*	2	R1	*Eua zebrina*	Partulidae	Snail, Tutuila tree	U.S.A. (AS)
C*	2	R2	*Pyrgulopsis chupaderae*	Hydrobiidae	Springsnail, Chupadera	U.S.A. (NM)
C*	11	R8	*Pyrgulopsis notidicola*	Hydrobiidae	Springsnail, elongate mud meadows	U.S.A. (NV)
C*	11	R2	*Pyrgulopsis gilae*	Hydrobiidae	Springsnail, Gila	U.S.A. (NM)
C*	2	R2	*Tryonia circumstriata(=stocktonensis)*	Hydrobiidae	Springsnail, Gonzales	U.S.A. (TX)
C*	8	R2	*Pyrgulopsis thompsoni*	Hydrobiidae	Springsnail, Huachuca	U.S.A. (AZ), Mexico
C*	11	R2	*Pyrgulopsis thermalis*	Hydrobiidae	Springsnail, New Mexico	U.S.A. (NM)
C*	2	R2	*Pyrgulopsis morrisoni*	Hydrobiidae	Springsnail, Page	U.S.A. (AZ)
C*	2	R2	*Tryonia cheatumi*	Hydrobiidae	Springsnail (=Tryonia), Phantom	U.S.A. (TX)
C	2	R2	*Pyrgulopsis bernardina*	Hydrobiidae	Springsnail, San Bernardino	U.S.A. (AZ), Mexico (Sonora)
C*	2	R2	*Pyrgulopsis trivialis*	Hydrobiidae	Springsnail, Three Forks	U.S.A. (AZ)
INSECTS						
C*	8	R1	*Nysius wekiuicola*	Lygaeidae	Bug, Wekiu	U.S.A. (HI)
C	3	R4	*Strymon acis bartrami*	Lycaenidae	Butterfly, Bartram's hairstreak	U.S.A. (FL)
C	3	R4	*Anaea troglodyta floridalis*	Nymphalidae	Butterfly, Florida leafwing	U.S.A. (FL)
C*	3	R1	*Hypolimnas octucula mariannensis*	Nymphalidae	Butterfly, Mariana eight-spot	U.S.A. (GU, MP)
C*	2	R1	*Vagrans egistina*	Nymphalidae	Butterfly, Mariana wandering	U.S.A. (GU, MP)
C*	6	R4	*Cyclargus thomasi bethunebakeri*	Lycaenidae	Butterfly, Miami blue	U.S.A. (FL), Bahamas
C*	5	R4	*Glyphopsyche sequatchie*	Limnephilidae	Caddisfly, Sequatchie	U.S.A. (TN)
C	5	R4	*Pseudanophthalmus insularis*	Carabidae	Cave beetle, Baker Station (= insular)	U.S.A. (TN)
C*	5	R4	*Pseudanophthalmus caecus*	Carabidae	Cave beetle, Clifton	U.S.A. (KY)
C	11	R4	*Pseudanophthalmus colemanensis*	Carabidae	Cave beetle, Coleman	U.S.A. (TN)
C	5	R4	*Pseudanophthalmus fowlerae*	Carabidae	Cave beetle, Fowler's	U.S.A. (TN)
C*	5	R4	*Pseudanophthalmus frigidus*	Carabidae	Cave beetle, icebox	U.S.A. (KY)
C	5	R4	*Pseudanophthalmus tiresias*	Carabidae	Cave beetle, Indian Grave Point (= Soothsayer)	U.S.A. (TN)
C*	5	R4	*Pseudanophthalmus inquisitor*	Carabidae	Cave beetle, inquirer	U.S.A. (TN)
C*	5	R4	*Pseudanophthalmus troglodytes*	Carabidae	Cave beetle, Louisville	U.S.A. (KY)
C	5	R4	*Pseudanophthalmus paulus*	Carabidae	Cave beetle, Noblett's	U.S.A. (TN).
C*	5	R4	*Pseudanophthalmus parvus*	Carabidae	Cave beetle, Tatum	U.S.A. (KY)
C*	3	R1	*Euphydryas editha taylori*	Nymphalidae	Checkerspot butterfly, Taylor's (= Whulge)	U.S. A. (OR, WA), Canada (BC)
C*	9	R1	*Megalagrion nigrohamatum nigrolineatum*	Coenagrionidae	Damselfly, blackline Hawaiian	U.S.A. (HI)
C*	2	R1	*Megalagrion leptodemas*	Coenagrionidae	Damselfly, crimson Hawaiian	U.S.A. (HI)
C*	2	R1	*Megalagrion nesiotes*	Coenagrionidae	Damselfly, flying earwig Hawaiian	U.S.A. (HI)

Table 1. - Candidate Notice of Review (Animals and Plants)—Continued

Note: See end of SUPPLEMENTARY INFORMATION for an explanation of symbols used in this table.

Status		Lead region	Scientific name	Family	Common name	Historic range
Category	Priority					
C*	2	R1	*Megalagrion oceanicum*	Coenagrionidae	Damselfly, oceanic Hawaiian	U.S.A. (HI)
C*	8	R1	*Megalagrion xanthomelas*	Coenagrionidae	Damselfly, orangeblack Hawaiian	U.S.A. (HI)
C*	2	R1	*Megalagrion pacificum*	Coenagrionidae	Damselfly, Pacific Hawaiian	U.S.A. (HI)
C*	2	R8	*Dinacoma caseyi*	Scarabidae	June beetle, Casey's	U.S.A. (CA)
C	5	R8	*Ambrysus funebris*	Naucoridae	Naucorid bug (=Furnace Creek), Nevares Spring	U.S.A. (CA)
PE	2	R1	*Drosophila attigua*	Drosophilidae	fly, Hawaiian picture-wing	U.S.A. (HI)
C*	2	R1	*Drosophila digressa*	Drosophilidae	fly, Hawaiian Picture-wing	U.S.A. (HI)
C*	8	R2	*Heterelmis stephani*	Elmidae	Riffle beetle, Stephan's	U.S.A. (AZ)
C*	8	R3	*Hesperia dacotae*	Hesperiidae	Skipper, Dakota	U.S.A. (MN, IA, SD, ND, IL), Canada
C*	8	R1	*Polites mardon*	Hesperiidae	Skipper, Mardon	U.S.A. (CA, OR, WA)
C*	2	R6	*Cicindela albissima*	Cicindelidae	Tiger beetle, Coral Pink Sand Dunes	U.S.A. (UT)
C*	5	R4	*Cicindela highlandensis*	Cicindelidae	Tiger beetle, highlands	U.S.A. (FL)
ARACHNIDS						
C*	2	R2	*Cicurina wartoni*	Dictynidae	Meshweaver, Warton cave	U.S.A. (TX)
CRUSTACEANS						
C	2	R2	*Gammarus hyalleloides*	Gammaridae	Amphipod, diminutive	U.S.A. (TX)
C*	5	R1	*Metabetaeus lohena*	Alpheidae	Shrimp, anchialine pool	U.S.A. (HI)
C*	5	R1	*Palaemonella burnsi*	Palaemonidae	Shrimp, anchialine pool	U.S.A. (HI)
C*	5	R1	*Procaris hawaiana*	Procarididae	Shrimp, anchialine pool	U.S.A. (HI)
C*	4	R1	*Vetericaris chaceorum*	Procaridae	Shrimp, anchialine pool	U.S.A. (HI)
C*	11	R4	*Typhlatya monae*	Atyidae	Shrimp, troglobitic groundwater	U.S.A. (PR), Barbuda, Dominican Republic
FLOWERING PLANTS						
C*	11	R8	*Abronia alpina*	Nyctaginaceae	Sand-verbena, Ramshaw Meadows	U.S.A. (CA)
C*	8	R4	*Arabis georgiana*	Brassicaceae	Rockcress, Georgia	U.S.A. (AL, GA)
C*	11	R4	*Argythamnia blodgettii*	Euphorbiaceae	Silverbush, Blodgett's	U.S.A. (FL)
C*	3	R1	*Artemisia campestris* var. *wormskioldii*	Asteraceae	Wormwood, northern	U.S.A. (OR, WA)
PE	2	R1	*Astelia waialealae*	Liliaceae	Pa'iniu	U.S.A. (HI)
C*	11	R6	*Astragalus tortipes*	Fabaceae	Milk-vetch, Sleeping Ute	U.S.A. (CO)
C*	2	R1	*Bidens amplectens*	Asteraceae	Ko'oko'olau	U.S.A. (HI)
C*	3	R1	*Bidens campylotheca pentamera*	Asteraceae	Ko'oko'olau	U.S.A. (HI)
C*	3	R1	*Bidens campylotheca waihoiensis*	Asteraceae	Ko'oko'olau	U.S.A. (HI)
C*	8	R1	*Bidens conjuncta*	Asteraceae	Ko'oko'olau	U.S.A. (HI)
C*	3	R1	*Bidens micrantha ctenophylla*	Asteraceae	Ko'oko'olau	U.S.A. (HI)
C*	8	R4	*Brickellia mosieri*	Asteraceae	Brickell-bush, Florida	U.S.A. (FL)
C*	2	R1	*Calamagrostis expansa*	Poaceae	Reedgrass, Maui	U.S.A. (HI)
C*	2	R1	*Calamagrostis hillebrandii*	Poaceae	Reedgrass, Hillebrand's	U.S.A. (HI)
C*	5	R4	*Calliandra locoensis*	Mimosaceae	No common name	U.S.A. (PR)

Table 1. - Candidate Notice of Review (Animals and Plants)—Continued

Note: See end of SUPPLEMENTARY INFORMATION for an explanation of symbols used in this table.

Status		Lead region	Scientific name	Family	Common name	Historic range
Category	Priority					
C*	5	R8	*Calochortus persistens*	Liliaceae	Mariposa lily, Siskiyou	U.S.A. (CA, OR)
C*	5	R4	*Calyptranthes estremerae*	Myrtaceae	No common name	U.S.A. (PR)
PE	2	R1	*Canavalia napaliensis*	Fabaceae	‘Awikiwiki	U.S.A. (HI)
C*	2	R1	*Canavalia pubescens*	Fabaceae	‘Awikiwiki	U.S.A. (HI)
C*	8	R1	*Castilleja christii*	Scrophulariaceae	Paintbrush, Christ’s	U.S.A. (ID)
C*	9	R4	*Chamaecrista lineata* var. *keyensis*	Fabaceae	Pea, Big Pine partridge	U.S.A. (FL)
C*	12	R4	*Chamaesyce deltoidea pinetorum*	Euphorbiaceae	Sandmat, pineland	U.S.A. (FL)
C*	9	R4	*Chamaesyce deltoidea serpyllum*	Euphorbiaceae	Spurge, wedge	U.S.A. (FL)
PE	2	R1	*Chamaesyce eleanoriae*	Euphorbiaceae	‘Akoko	U.S.A. (HI)
PE	3	R1	*Chamaesyce remyi* var. *kauaiensis*	Euphorbiaceae	‘Akoko	U.S.A. (HI)
PE	3	R1	*Chamaesyce remyi* var. *remyi*	Euphorbiaceae	‘Akoko	U.S.A. (HI)
PE	2	R1	*Charpentiera densiflora*	Amaranthaceae	Papala	U.S.A. (HI)
C*	6	R8	*Chorizanthe parryi* var. *fernandina*	Polygonaceae	Spineflower, San Fernando Valley	U.S.A. (CA)
C*	2	R4	*Chromolaena frustrata*	Asteraceae	Thoroughwort, Cape Sable	U.S.A. (FL)
C*	2	R4	*Consolea corallicola*	Cactaceae	Cactus, Florida semaphore	U.S.A. (FL)
C*	5	R4	*Cordia rupicola*	Boraginaceae	No common name	U.S.A. (PR), Anegada
C*	2	R1	*Cyanea asplenifolia*	Campanulaceae	Haha	U.S.A. (HI)
C*	2	R1	*Cyanea calycina*	Campanulaceae	Haha	U.S.A. (HI)
PE	-	R1	*Cyanea dolichopoda*	Campanulaceae	Haha	U.S.A. (HI)
PE	2	R1	*Cyanea eleeleensis*	Campanulaceae	Haha	U.S.A. (HI)
PE	-	R1	*Cyanea kolekoleensis*	Campanulaceae	Haha	U.S.A. (HI)
PE	2	R1	*Cyanea kuhihewa*	Campanulaceae	Haha	U.S.A. (HI)
C*	2	R1	*Cyanea kunthiana*	Campanulaceae	Haha	U.S.A. (HI)
C*	2	R1	*Cyanea lanceolata*	Campanulaceae	Haha	U.S.A. (HI)
C*	2	R1	*Cyanea obtusa*	Campanulaceae	Haha	U.S.A. (HI)
C*	2	R1	*Cyanea tritomantha*	Campanulaceae	‘aku ‘aku	U.S.A. (HI)
C*	2	R1	*Cyrtandra filipes*	Gesneriaceae	Ha‘iwale	U.S.A. (HI).
C*	2	R1	*Cyrtandra kaulantha*	Gesneriaceae	Ha‘iwale	U.S.A. (HI)
PE	2	R1	*Cyrtandra oenobarba*	Gesneriaceae	Ha‘iwale	U.S.A. (HI)
C*	2	R1	*Cyrtandra oxybapha*	Gesneriaceae	Ha‘iwale	U.S.A. (HI)
PE	-	R1	*Cyrtandra paliku*	Gesneriaceae	Ha‘iwale	U.S.A. (HI)
C*	2	R1	*Cyrtandra sessilis*	Gesneriaceae	Ha‘iwale	U.S.A. (HI)
C*	3	R4	*Dalea carthagenensis* var. *floridana*	Fabaceae	Prairie-clover, Florida	U.S.A. (FL)
C*	5	R5	*Dichanthelium hirstii*	Poaceae	Panic grass, Hirsts’	U.S.A. (DE, GA, NC, NJ)
C*	5	R4	*Digitaria pauciflora*	Poaceae	Crabgrass, Florida pineland	U.S.A. (FL)
PE	3	R1	*Dubautia imbricata imbricata*	Asteraceae	Na‘ena‘e	U.S.A. (HI)

Table 1. - Candidate Notice of Review (Animals and Plants)—Continued

Note: See end of SUPPLEMENTARY INFORMATION for an explanation of symbols used in this table.

Status		Lead region	Scientific name	Family	Common name	Historic range
Category	Priority					
PE	-	R1	*Dubautia kalalauensis*	Asteraceae	Na'ena'e	U.S.A. (HI)
PE	-	R1	*Dubautia kenwoodii*	Asteraceae	Na'ena'e	U.S.A. (HI)
PE	3	R1	*Dubautia plantaginea magnifolia*	Asteraceae	Na'ena'e	U.S.A. (HI)
PE	2	R1	*Dubautia waialealae*	Asteraceae	Na'ena'e	U.S.A. (HI)
C*	3	R2	*Echinomastus erectocentrus* var. *acunensis*	Cactaceae	Cactus, Acuna	U.S.A. (AZ), Mexico
C*	8	R2	*Erigeron lemmonii*	Asteraceae	Fleabane, Lemmon	U.S.A. (AZ)
C*	2	R1	*Eriogonum codium*	Polygonaceae	Buckwheat, Umtanum Desert	U.S.A. (WA)
C*	6	R8	*Eriogonum corymbosum* var. *nilesii*	Polygonaceae	Buckwheat, Las Vegas	U.S.A. (NV)
C	5	R8	*Eriogonum diatomaceum*	Polygonaceae	Buckwheat, Churchill Narrows	U.S.A (NV)
C*	5	R8	*Eriogonum kelloggii*	Polygonaceae	Buckwheat, Red Mountain	U.S.A. (CA)
C*	2	R1	*Festuca hawaiiensis*	Poaceae	No common name	U.S.A. (HI)
C*	11	R2	*Festuca ligulata*	Poaceae	Fescue, Guadalupe	U.S.A. (TX), Mexico
C*	2	R1	*Gardenia remyi*	Rubiaceae	Nanu	U.S.A. (HI)
C*	8	R1	*Geranium hanaense*	Geraniaceae	Nohoanu	U.S.A. (HI)
C*	8	R1	*Geranium hillebrandii*	Geraniaceae	Nohoanu	U.S.A. (HI)
PE	5	R1	*Geranium kauaiense*	Geraniaceae	Nohoanu	U.S.A. (HI)
C*	5	R4	*Gonocalyx concolor*	Ericaceae	No common name	U.S.A. (PR)
C	2	R4	*Harrisia aboriginum*	Cactaceae	Pricklyapple, aboriginal (shellmound applecactus)	U.S.A. (FL)
C*	5	R8	*Hazardia orcuttii*	Asteraceae	Orcutt's hazardia	U.S.A. (CA), Mexico
C*	2	R1	*Hedyotis fluviatilis*	Rubiaceae	Kampua'a	U.S.A. (HI)
C*	5	R4	*Helianthus verticillatus*	Asteraceae	Sunflower, whorled	U.S.A. (AL, GA, TN)
C*	5	R2	*Hibiscus dasycalyx*	Malvaceae	Rose-mallow, Neches River	U.S.A. (TX)
C	2	R6	*Ipomopsis polyantha*	Polemoniaceae	Skyrocket, Pagosa	U.S.A. (CO)
C*	5	R8	*Ivesia webberi*	Rosaceae	Ivesia, Webber	U.S.A. (CA, NV)
C*	3	R1	*Joinvillea ascendens ascendens*	Joinvilleaceae	'Ohe	U.S.A. (HI)
PE	2	R1	*Keysseria erici*	Asteraceae	No common name	U.S.A. (HI)
PE	8	R1	*Keysseria helenae*	Asteraceae	No common name	U.S.A. (HI)
C*	2	R1	*Korthalsella degeneri*	Viscaceae	Hulumoa	U.S.A. (HI)
PE	2	R1	*Labordia helleri*	Loganiaceae	Kamakahala	U.S.A. (HI)
PE	2	R1	*Labordia pumila*	Loganiaceae	Kamakahala	U.S.A. (HI)
C*	5	R4	*Leavenworthia crassa*	Brassicaceae	Gladecress, unnamed	U.S.A. (AL)
C*	2	R2	*Leavenworthia texana*	Brassicaceae	Gladecress, Texas golden	U.S.A. (TX)
C*	5	R4	*Lesquerella globosa*	Brassicaceae	Bladderpod, Short's	U.S.A. (IN, KY, TN)
C*	2	R4	*Linum arenicola*	Linaceae	Flax, sand	U.S.A. (FL)
C*	3	R4	*Linum carteri* var. *carteri*	Linaceae	Flax, Carter's small-flowered	U.S.A. (FL)
PE	8	R1	*Lysimachia daphnoides*	Myrsinaceae	Lehua makanoe	U.S.A. (HI)
PE	-	R1	*Lysimachia iniki*	Myrsinaceae	No common name	U.S.A. (HI)
PE	-	R1	*Lysimachia pendens*	Myrsinaceae	No common name	U.S.A. (HI)

Table 1. - Candidate Notice of Review (Animals and Plants)—Continued

Note: See end of SUPPLEMENTARY INFORMATION for an explanation of symbols used in this table.

Status		Lead region	Scientific name	Family	Common name	Historic range
Category	Priority					
PE	-	R1	*Lysimachia scopulensis*	Myrsinaceae	No common name	U.S.A. (HI)
PE	-	R1	*Lysimachia venosa*	Myrsinaceae	No common name	U.S.A. (HI)
C*	2	R1	*Melicope christophersenii*	Rutaceae	Alani	U.S.A. (HI)
PE	2	R1	*Melicope degeneri*	Rutaceae	Alani	U.S.A. (HI)
C*	2	R1	*Melicope hiiakae*	Rutaceae	Alani	U.S.A. (HI)
C*	2	R1	*Melicope makahae*	Rutaceae	Alani	U.S.A. (HI)
PE	2	R1	*Melicope paniculata*	Rutaceae	Alani	U.S.A. (HI)
PE	2	R1	*Melicope puberula*	Rutaceae	Alani	U.S.A. (HI)
C*	2	R1	*Myrsine fosbergii*	Myrsinaceae	Kolea	U.S.A. (HI)
PE	-	R1	*Myrsine knudsenii*	Myrsinaceae	Kolea	U.S.A. (HI)
PE	2	R1	*Myrsine mezii*	Myrsinaceae	Kolea	U.S.A. (HI)
C*	2	R1	*Myrsine vaccinioides*	Myrsinaceae	Kolea	U.S.A. (HI)
C*	8	R5	*Narthecium americanum*	Liliaceae	Asphodel, bog	U.S.A. (DE, NC, NJ, NY, SC)
C*	2	R1	*Nothocestrum latifolium*	Solanaceae	‘Aiea	U.S.A. (HI)
C*	2	R1	*Ochrosia haleakalae*	Apocynaceae	Holei	U.S.A. (HI)
C*	3	R2	*Pediocactus peeblesianus* var. *fickeiseniae*	Cactaceae	Cactus, Fickeisen plains	U.S.A. (AZ)
C*	2	R6	*Penstemon debilis*	Scrophulariaceae	Beardtongue, Parachute	U.S.A. (CO)
C*	6	R6	*Penstemon scariosus* var. *albifluvis*	Scrophulariaceae	Beardtongue, White River	U.S.A. (CO, UT)
C*	2	R1	*Peperomia subpetiolata*	Piperaceae	‘Ala ‘ala wai nui	U.S.A. (HI)
C	5	R8	*Phacelia stellaris*	Hydrophyllaceae	Phacelia, Brand’s	U.S.A. (CA), Mexico
C*	8	R6	*Phacelia submutica*	Hydrophyllaceae	Phacelia, DeBeque	U.S.A. (CO)
C*	2	R1	*Phyllostegia bracteata*	Lamiaceae	No common name	U.S.A. (HI)
C*	8	R1	*Phyllostegia floribunda*	Lamiaceae	No common name	U.S.A. (HI)
PE	2	R1	*Phyllostegia hispida*	Lamiaceae	No common name	U.S.A. (HI)
PE	-	R1	*Phyllostegia renovans*	Lamiaceae	No common name	U.S.A. (HI)
C*	5	R1	*Physaria tuplashensis*	Brassicaceae	Bladderpod, White Bluffs	U.S.A. (WA)
PE	2	R1	*Pittosporum napaliense*	Pittosporaceae	Ho‘awa	U.S.A. (HI)
C*	5	R4	*Platanthera integrilabia*	Orchidaceae	Orchid, white fringeless	U.S.A. (AL, GA, KY, MS, NC, SC, TN, VA)
C*	3	R1	*Platydesma cornuta* var. *cornuta*	Rutaceae	No common name	U.S.A. (HI)
C*	3	R1	Platydesma *cornuta* var. *decurrens*	Rutaceae	No common name	U.S.A. (HI)
C*	2	R1	*Platydesma remyi*	Rutaceae	No common name	U.S.A. (HI)
PE	2	R1	*Platydesma rostrata*	Rutaceae	Pilo kea lau li‘i	U.S.A. (HI)
C	2	R1	*Pleomele fernaldii*	Agavaceae	Hala pepe	U.S.A. (HI)
C*	2	R1	*Pleomele forbesii*	Agavaceae	Hala pepe	U.S.A. (HI)
C*	11	R8	*Potentilla basaltica*	Rosaceae	Cinquefoil, Soldier Meadow	U.S.A. (NV)
PE	2	R1	*Pritchardia hardyi*	Asteraceae	Lo‘ulu	U.S.A. (HI)

Table 1. - Candidate Notice of Review (Animals and Plants)—Continued

Note: See end of SUPPLEMENTARY INFORMATION for an explanation of symbols used in this table.

Status		Lead region	Scientific name	Family	Common name	Historic range
Category	Priority					
C*	3	R1	*Pseudognaphalium (=Gnaphalium) sandwicensium* var. *molokaiense*	Asteraceae	‘Ena‘ena	U.S.A. (HI)
PE	2	R1	*Psychotria grandiflora*	Rubiaceae	Kopiko	U.S.A. (HI)
C*	3	R1	*Psychotria hexandra* ssp. *oahuensis* var. *oahuensis*	Rubiaceae	Kopiko	U.S.A. (HI)
PE	2	R1	*Psychotria hobdyi*	Rubiaceae	Kopiko	U.S.A. (HI)
C*	2	R1	*Pteralyxia macrocarpa*	Apocynaceae	Kaulu	U.S.A. (HI)
C*	2	R1	*Ranunculus hawaiensis*	Ranunculaceae	Makou	U.S.A. (HI)
C*	2	R1	*Ranunculus mauiensis*	Ranunculaceae	Makou	U.S.A. (HI)
C*	8	R8	*Rorippa subumbellata*	Brassicaceae	Cress, Tahoe yellow	U.S.A. (CA, NV)
PE	2	R1	*Schiedea attenuata*	Caryophyllaceae	No common name	U.S.A. (HI)
C*	2	R1	*Schiedea pubescens*	Caryophyllaceae	Ma‘oli‘oli	U.S.A. (HI)
C*	2	R1	*Schiedea salicaria*	Caryophyllaceae	No common name	U.S.A. (HI)
C*	5	R8	*Sedum eastwoodiae*	Crassulaceae	Stonecrop, Red Mountain	U.S.A. (CA)
C*	2	R1	*Sicyos macrophyllus*	Cucurbitaceae	‘Anunu	U.S.A. (HI)
C	12	R4	*Sideroxylon reclinatum ssp. austrofloridense*	Sapotaceae	Bully, Everglades	U.S.A. (FL)
C*	8	R1	*Solanum nelsonii*	Solanaceae	Popolo	U.S.A. (HI)
C	8	R4	*Solidago plumosa*	Asteraceae	Goldenrod, Yadkin River	U.S.A. (NC)
C	2	R2	*Sphaeralcea gierischii*	Malvaceae	Mallow, Gierisch	U.S.A. (AZ, UT)
C*	2	R1	*Stenogyne cranwelliae*	Lamiaceae	No common name	U.S.A. (HI)
PE	2	R1	*Stenogyne kealiae*	Lamiaceae	No common name	U.S.A. (HI)
C*	8	R4	*Symphyotrichum georgianum*	Asteraceae	Aster, Georgia	U.S.A. (AL, FL, GA, NC, SC)
PE	-	R1	*Tetraplasandra bisattenuata*	Araliaceae	No common name	U.S.A. (HI)
PE	-	R1	*Tetraplasandra flynnii*	Araliaceae	No common name	U.S.A. (HI)
C*	2	R1	*Zanthoxylum oahuense*	Rutaceae	A‘e	U.S.A. (HI)
FERNS AND ALLIES						
C*	8	R1	*Christella boydiae* (=*Cyclosorus boydiae* var. *boydiae* + *Cyclosorus boydiae kipahuluensis*)	Thelypteridaceae	No common name	U.S.A. (HI)
PE	-	R1	*Diellia mannii*	Aspleniaceae	No common name	U.S.A. (HI)
PE	-	R1	*Doryopteris angelica*	Pteridaceae	No common name	U.S.A. (HI)
C*	2	R1	*Doryopteris takeuchii*	Pteridaceae	No common name	U.S.A. (HI)
PE	-	R1	*Dryopteris crinalis* var. *podosorus*	Dryopteridaceae	Palapalai aumakua	U.S.A. (HI)
C*	2	R1	*Huperzia (= Phlegmariurus) stemmermanniae*	Lycopodiaceae	Wawae‘iole	U.S.A. (HI)
C*	3	R1	*Microlepia strigosa* var. *mauiensis* (=*Microlepia mauiensis*)	Dennstaedtiaceae	Palapalai	U.S.A. (HI)

Table 2. Animals and Plants Formerly Candidates or Formerly Proposed for Listing

Note: See end of SUPPLEMENTARY INFORMATION for an explanation of symbols used in this table.

Status		Lead region	Scientific name	Family	Common name	Historical range
Code	Expl.					
MAMMALS						
T	L	R7	*Ursus maritimus*	Ursidae	Bear, polar	U.S.A. (AK), Canada, Russia, Denmark (Greenland), Norway
SNAILS						
Rc	A	R6	*Oreohelix peripherica wasatchensis*	Oreohelicidae	Mountainsnail, Ogden	U.S.A. (UT)
FLOWERING PLANTS						
Rc	A	R4	*Indigofera trita* subsp. *scabra* (formerly *Indigofera mucronata* var. *keyensis*)	Fabaceae	Indigo, Florida	U.S.A. (FL); Belize, Brazil, Columbia, Costa Rica, Cuba, Ecuador, El Salvador, Ethiopia, Guatemala, Honduras, India, Jamaica, Laos, Madagascar, Mexico, Pakistan, Panama, Peru, Sierra Leone, Somalia, Sri Lanka, Tanzania, Zaire, and the islands of Hispaniola and New Guinea

[FR Doc. E8–28986 Filed 12–9–08; 8:45 am]

BILLING CODE 4310–55–S

Federal Register

Wednesday,
December 10, 2008

Part III

Department of Labor

Occupational Safety and Health Administration

29 CFR Parts 1917 and 1918

Longshoring and Marine Terminals; Vertical Tandem Lifts; Final Rule

DEPARTMENT OF LABOR

Occupational Safety and Health Administration

29 CFR Parts 1917 and 1918

[Docket No. S–025A]

RIN 1218–AA56

Longshoring and Marine Terminals; Vertical Tandem Lifts

AGENCY: Occupational Safety and Health Administration (OSHA), Labor.

ACTION: Final rule.

SUMMARY: OSHA is revising the Marine Terminals Standard and related sections of the Longshoring Standard to adopt new requirements related to the practice of lifting two intermodal containers together, one on top of the other, connected by semiautomatic twistlocks (SATLs). This practice is known as a vertical tandem lift (VTL). The final standard adopted today permits VTLs of no more than two empty containers provided certain safeguards are followed.

DATES: This final rule becomes effective on April 9, 2009.

ADDRESSES: In accordance with 28 U.S.C. 2112(a)(2), the Agency designates Joseph M. Woodward, Associate Solicitor of Labor for Occupational Safety and Health, Office of the Solicitor, Room S–4004, U.S. Department of Labor, 200 Constitution Avenue, NW., Washington, DC 20210, to receive petitions for review of the final rule.

FOR FURTHER INFORMATION CONTACT: For technical inquiries, contact Joseph V. Daddura, Director, Office of Maritime, Directorate of Standards and Guidance, OSHA, U.S. Department of Labor, Room N–3621, 200 Constitution Avenue, NW., Washington, DC 20210; telephone: (202) 693–2222. For general information and press inquiries, contact Jennifer Ashley, Director, Office of Communications, OSHA, U.S. Department of Labor, Room N–3647, 200 Constitution Avenue, NW., Washington, DC 20210; telephone: (202) 693–1999. For additional copies of this **Federal Register** notice, contact OSHA, Office of Publications, U.S. Department of Labor, Room N–3101, 200 Constitution Avenue, NW., Washington, DC 20210; telephone (202) 693–1888. Electronic copies of this **Federal Register** notice, as well as news releases and other relevant documents, are available at OSHA's Web page on the Internet at *http://www.osha.gov*.

SUPPLEMENTARY INFORMATION: This preamble to the final rule for VTLs in the Longshoring and Marine Terminals Standards discusses the events leading to the adoption of the standard, the necessity for the standard, and the rationale behind the specific provisions set forth in the final rule. The preamble also includes the Final Economic and Regulatory Flexibility Analysis, a summary of the paperwork issues under the Paperwork Reduction Act of 1995, and sections on other requirements necessary for an OSHA standard. The discussion follows this outline:

I. Background
II. Pertinent Legal Authority
III. International Aspects.
IV. Significant Risk
V. Summary and Explanation of the Final Rule
VI. Final Economic Analysis and Regulatory Flexibility Analysis
VII. Environmental Impact
VIII. Federalism
IX. Unfunded Mandates
X. Office of Management and Budget Review Under the Paperwork Reduction Act of 1995
XI. State Plan Requirements
XII. Effective Date
XIII. Authority and Signature

I. Background

A. Acronyms and Abbreviations

The following acronyms and abbreviations have been used in this document:

1998–Tr. Transcript page number from the public meeting on VTLs in January 1998
ACEP Approved Continuous Examination Program
DOL Department of Labor
Ex. Exhibit
FEA Final Economic Analysis
ICHCA International Cargo Handling and Coordination Association
ILA International Longshoremen's Association
ILO International Labor Organization
ISO International Organization for Standardization
ISO/TC 104 ISO Technical Committee Number 104 Freight Containers
ILWU International Longshore and Warehouse Union
NEPA National Environmental Policy Act
MACOSH Maritime Advisory Committee for Occupational Safety and Health
NIOSH National Institute for Occupational Safety and Health
NIST National Institute of Standards and Technology
NMSA National Maritime Safety Association
NPRM Notice of Proposed Rulemaking
OMB Office of Management and Budget
OSHA Occupational Safety and Health Administration
PCMSC Pacific Coast Maritime Safety Code
PMA Pacific Maritime Association
RFA Regulatory Flexibility Act
SNTRI Swedish National Testing and Research Institute
Tr. Transcript page number from the public hearing held on July 29 (Tr. 1-page) and July 30 (Tr. 2-page), 2004
SATL Semiautomatic twistlock
TEU 20-foot equivalent unit
UMRA Unfunded Mandates Reform Act of 1995
USMX United States Maritime Alliance
VTL Vertical tandem lift

B. Introduction

Since the 1970s, intermodalism (the containerization of cargo) has become the dominant mode of cargo transport in the maritime industry, replacing centuries-old, break-bulk cargo handling. In the marine cargo handling industry, intermodalism typically involves three key components: standardized containers with uniform corner castings; interbox connectors (such as SATLs) to secure the containers (to each other at the four corners, to the deck of the ship, to a railroad car, or to a truck chassis); and a type of crane called a container gantry crane that has specialized features for the rapid loading and unloading of containers. Because intermodalism is highly dependent on standardized containers and connecting gear, several international organizations have developed standards for equipment and practices to facilitate intermodal freight operations. This helps ensure that containers and interbox connectors are sized and operate properly so that containers and connectors from different manufacturers will fit together.

The International Organization for Standardization (ISO) is a worldwide federation of national standards bodies whose mission is to promote the development of international standards to reduce technical barriers to trade. There are several ISO standards addressing the design and operational handling of intermodal containers and interbox connectors. In particular, ISO 3874, *Series 1 Freight Containers—Handling and Securing*, addresses the size and strength of containers and corner castings, the size and strength of the interbox connectors, and proper lifting techniques. During shipment, containers above deck are secured by interbox connectors to each other and to the deck of the ship. In the conventional loading and unloading process, the container gantry crane lifts one container (either 6.1 or 12.2 meters long) at a time, using the crane's specially developed spreader beam. ISO 3874 also addresses the lifting of two 12.2-meter containers end to end but, until 2003, it had not addressed the practice of VTLs. A VTL is the practice of a container crane lifting two or more intermodal containers, one on top of the other, connected by a particular type of

interbox connector known as a semi-automatic twistlock or SATL.

The VTL issue has been evolving for many years. The following table shows the progression of events:

1986	Matson Terminals, Inc., requests permission to perform VTLs, and OSHA responds with letter allowing VTLs with two empty containers or with automobiles.
1993	OSHA issues a letter to Sea-Land Service, Inc., allowing VTLs with two empty containers under certain conditions.
1994	OSHA publishes a proposed rule to revise the Marine Terminals and Longshoring Standards.
1997	OSHA publishes the final rule revising the Marine Terminal and Longshoring Standards, reserving the VTL issue for future consideration.
	OSHA reopens the VTL record and announces a public meeting on the safety, risk, and feasibility issues associated with VTLs.
1998	OSHA holds the public meeting on the safety, risk, and feasibility issues associated with VTLs.
2003	OSHA publishes a proposed rule permitting VTLs of no more than two containers with a maximum load of 20 tons.
2004	OSHA holds a public hearing on the proposed rule on VTLs.

The issue of vertical tandem lifting was first raised to OSHA by Matson Terminals, Inc. In 1986, through a series of meetings and correspondence with OSHA (Exs.[1] 40–1, 40–2, 40–3, 40–4, 40–5, 40–6, 40–6–1, 40–7), Matson asked to be permitted to lift two containers at a time, connected by SATLs, either empty or with one or both containers containing automobiles. At that time, OSHA regulations did not directly address or prohibit this practice. The container handling regulation formerly in § 1918.85(c) stated, ''all hoisting of containers shall be by means which will safely do so without probable damage to the container, and using the lifting fittings provided.''[2] In November 1986, OSHA, in a letter to Matson (Ex. 40–8), allowed the company to lift containers, either empty or with one or both containers containing automobiles, in VTLs. The letter to Matson stated:

> The [Compliance Safety and Health Officer] must be mindful of the manufacturer's specifications and endorsements, the Matson engineering technical specifications, the ABS Test Report, as well as, maintained conditions of the corner posts, the twist locks, the cones, the containers and the hoisting and/or lifting devices. [Ex. 40–8]

In 1993, OSHA received a letter from Sea-Land Service, Inc., requesting that OSHA interpret its existing longshoring standards to allow the lifting of two empty 12.2-meter (40-foot) ISO freight containers that were vertically coupled using SATLs (Ex. 1). OSHA's standards had not changed since OSHA's letter to Matson. In its response, OSHA allowed Sea-Land to handle two empty containers vertically connected, if eight requirements were met (Ex. 2, hereinafter called ''the Gurnham letter''). The requirements were developed by OSHA's Directorate of Compliance Programs (now called the Directorate of Enforcement), taking into account applicable OSHA standards and related industry practices associated with container cargo handling operations. These eight requirements were: inspecting containers for visible defects; verifying that both containers are empty; assuring that containers are properly marked; assuring that all the SATLs operate (lock-unlock) in the same manner and have positive, verifiable locking systems; assuring that the load does not exceed the capacity of the crane; assuring that the containers are lifted vertically; having available for inspection manufacturers' documents that verify the capacities of the SATLs and corner castings; and directing employees to stay clear of the lifting area.

In 1994, OSHA addressed VTLs briefly in the preamble to the proposed revisions to the Marine Terminals and Longshoring Standards (29 CFR Parts 1917 and 1918, respectively; 59 FR 28594, June 2, 1994), stating: ''In those situations where one container is used to lift another container, using twistlocks, then the upper container and twist locks become, in effect, a lifting appliance and must be certified as such'' (59 FR 28602, June 2, 1994). OSHA received comments on this issue only from the International Longshore and Warehouse Union (Exs. 4, 5, 6). Although these comments favored the proposed interpretation and requested that the Agency include it as a requirement in the regulatory text, they included no specific information regarding the hazards of VTLs of two containers using SATLs. Sea-Land submitted a detailed six-page comment (Ex. 7) addressing a number of the proposed changes to the Marine Terminals and Longshoring Standards, but did not address VTLs. OSHA received a late, posthearing submission from the International Longshoremen's Association, however, that alerted the Agency to what might be a serious problem with this type of lift, citing several incidents at U.S. ports where failures had occurred (Ex. 8–A). While OSHA did not rely on this letter in issuing the final rule because it was not a timely submission to the record, the letter made OSHA aware of safety concerns that might need to be addressed through supplemental rulemaking. Because of a lack of information on the safety considerations, cost impacts, and productivity effects of VTLs, as well as on the capability of containers and SATLs to withstand such loading, OSHA reserved judgment on the appropriate regulatory approach to this practice, pending further study (62 FR 40142, 40152, July 25, 1997).

Until the publication of the final Longshoring and Marine Terminals Standards in 1997, OSHA viewed the lifting of one container by another container using SATLs as similar to a container spreader picking up a single container using the spreader's twistlocks. Although the terms ''semi-automatic twistlocks'' and ''spreader-bar twistlocks'' appear similar, they refer to two very distinct items. SATLs were designed to connect and secure intermodal containers that are stowed on the deck of a vessel. They are generally made of a cast metal with a surface that has not been finely honed. By contrast, a spreader-bar twistlock is an integral part of a gantry crane's container spreader. It has a similar appearance to a SATL, but is made of forged metal with a machined surface. These twistlocks are typically locked and unlocked with hydraulic power and are used as part of the gantry crane to lift and move containers.

In lifting the bottom container in a VTL, the upper container serves the same role as a container spreader on a gantry crane, and the SATLs perform the same function of holding the bottom container, as do the twistlocks on the container spreader bars.

A gantry crane's container spreader bars are considered a ''lifting appliance,'' according to the International Labor Organization (ILO) Convention 152 Dock Work, portions of which OSHA incorporated or adopted in the Longshoring Standards in 29 CFR Part 1918. The ILO is a specialized, independent agency of the United Nations with a unique tripartite structure of business, labor, and government representatives. Its mandate is to improve working conditions (including safety), create employment, and promote workplace human rights,

[1] Exhibits in Docket 025A on the proposed rule on vertical tandem lifts (68 FR 54298–54318).

[2] Existing § 1918.85(f) addresses the safe lifting of containers.

globally. Under ILO Convention 152, a lifting appliance, including the twistlocks, must be proof-load tested and inspected before initial use and periodically retested and reinspected. However, applying that same requirement to the VTL situation would be much more difficult to accomplish. It would require a specific container (the one being used to lift another container) and four specific SATLs to be tested and inspected as a unit and to remain as a unit for retesting and reinspection. Given the millions of intermodal containers and millions more SATLs used in the maritime cargo handling industry, matching a specific container and four SATLs for VTL use over any length of time is nearly impossible. In view of this impracticality, OSHA sought an interpretation about the matter from the ILO, which is discussed later in this section of the preamble.

On October 9, 1997, OSHA reopened the VTL record with a **Federal Register** notice that also announced a public meeting, which was held in Washington, DC, on January 27, 1998 (62 FR 52671). At that public meeting, OSHA heard testimony from 25 witnesses, representing the U.S. Coast Guard, the ISO, national and international maritime safety associations, container and twistlock manufacturers, ship operators, stevedoring companies, and longshore unions (Ex. 22x).

Shortly after the January public meeting, OSHA decided on a multifaceted approach to resolve the questions raised during the public meeting:

a. Contract with the National Institute of Standards and Technology (NIST) to conduct engineering studies about the strength and durability of container corner castings and SATLs;

b. Meet with the International Cargo Handling and Coordination Association [3] (ICHCA) about international safety aspects of VTLs;

c. Meet with the ILO to clarify the ambiguity in existing interpretations of ILO Convention 152;

d. Monitor the ISO deliberations regarding VTLs; and

e. Form a workgroup within the Maritime Advisory Committee for Occupational Safety and Health (MACOSH) to address issues relating to VTLs and report back to MACOSH.

MACOSH was chartered by the Secretary of Labor to advise OSHA on matters relating to occupational safety and health standards in the maritime industries. MACOSH members include representatives of employers, employees, State safety and health agencies, a designee of the Secretary of Health and Human Services, and other groups affected by maritime standards. During a MACOSH meeting held in Hampton, Virginia, on September 22 and 23, 1998, a VTL workgroup was formed consisting of the MACOSH longshore employer and employee representatives, with participation by many other interested stakeholders. Over the next several years, the VTL workgroup discussed VTL issues at informal working group meetings and during MACOSH meetings.

On September 28, 1998, members of MACOSH's VTL workgroup met with ICHCA in Malmo, Sweden, to discuss the VTL issue. This was followed by a meeting with ILO in Geneva, Switzerland. The discussion with the ILO focused on the issue of determining whether the components of a VTL (the upper intermodal container and the SATLs) are either a ''lifting appliance'' or ''loose gear'' within the meaning of the relevant international standards. On October 21, 1998, an ILO official indicated to OSHA that the ILO considers SATLs used for lifting to be loose gear, and that it considers the upper container to be merely part of the load, rather than loose gear or a lifting appliance (Exs. 31, 32). The significance of this decision is that as loose gear, under ILO Convention 152, SATLs must be tested and inspected before initial use and reinspected on an annual basis, and the containers have no additional inspection requirements. Lifting appliances, on the other hand, must be retested at least once every 5 years. Retesting of a lifting appliance in a VTL would require that a specific container and four specific SATLs used for VTLs be proof-load tested before initial use and every 5 years thereafter. As mentioned previously, this would be almost impossible to do.

During a MACOSH meeting held at the U.S. Merchant Marine Academy, Kings Point, New York, in July 1999, Dr. H.S. Lew of NIST presented a report on the strength of SATLs, latchlocks (a device similar in usage to a SATL, but of a different design), and container corner castings (Ex. 40–10). Dr. Lew's study indicated that the SATLs he tested were very substantial with load capacities ranging from 562 to 802 kN and that the container corner castings were more likely to deform and fail before the SATLs. However, he expressed reservations about the use of latchlocks as interbox connectors. This particular type of interbox connector has a smaller bearing surface in contact with the corner casting. In Dr. Lew's opinion, this makes it more likely that, if the spring-loaded latch does not extend fully inside the container corner casting, it could slip through the hole in the corner casting when under load, such as when lifting another container. Even when the lock of a latchlock was fully extended, the NIST study determined that its surface area was insufficient to safely perform VTLs. In regard to the strength of SATLs, the conclusions of the NIST study were similar to a Swedish study (Ex. 11–6 H) that was conducted in 1997 by the Swedish National Testing and Research Institute. (For an extended discussion of these studies see the discussion of the issue titled ''Strength of the container-connector system'' under section O, Summary and Explanation of the Final Rule, later in this preamble.)

On September 8, 2000, the U.S. delegation to ISO Technical Committee Number 104 Freight Containers (ISO/TC 104) held a meeting in Washington, DC, primarily to discuss the U.S. position on VTLs for the ISO biennial meeting to be held in October. After this meeting, OSHA sent a letter to the Chairman of ISO/TC 104 addressing concerns such as safety factors, the use of latchlocks, and the lack of operational procedures (Ex. 40–11).

At their biennial meeting in Cape Town, South Africa, in October 2000, the ISO/TC 104 agreed that SATLs, which previously were only used for securing containers, could be used to lift containers. However, ISO/TC 104 did not address the question of how to use SATLs safely for such lifting, because ISO does not issue standards for operational procedures. In response to safety concerns in this area, ISO/TC 104 passed a resolution requesting that ICHCA, a member of ISO/TC 104, develop operational guidelines for VTLs. ICHCA agreed to work on such guidelines.

In May 2002, ISO formally adopted language allowing SATLs that meet certain conditions to be used for lifting:

> The vertical coupling of containers that are not specifically designed as in 6.2.4 [ISO 3874] for lifting purposes, using twistlocks or other loose gear, is acceptable if forces of not greater than 75 kN [Footnote 1]) act vertically through each corner fitting, and the twistlocks or other loose gear used are certified [Footnote 2]) for lifting. The twistlocks or other loose gear shall be periodically examined. [Ex. 40–9]

Footnote 1 stated:

[3] ICHCA is an independent, nonpolitical international membership organization established in 1952, whose membership spans some 85 countries and includes corporations, individuals, academic institutions and other organizations involved in, or concerned with, the international transport and cargo handling industry.

The value of 75 kN prescribes the minimum structural capability of the lock/corner fitting combination. The 75 kN value includes an arbitrary constant wind load of 26 kN (corresponding wind speed of 100 km/h), regardless of the size of the containers. As an example, the balance of the 75 kN value equates to two 1 AAA containers with a combined tare of 22 kN and a maximum payload of 27 kN. A practical upper limit of three vertically-coupled containers is also envisaged.

Footnote 2 stated:

The certification process envisaged is to use a safety factor of at least four based on the ultimate strength of the material.

Essentially, this meant that, based on the strength of the SATLs and the containers, the ISO standard would allow VTLs to consist of up to three containers with a total load weight of 20 tons.

In January 2001, as agreed to at the Cape Town meeting, an ICHCA VTL workgroup met in London to begin drafting operational guidelines for VTLs. The ICHCA workgroup finalized their VTL guidelines (Ex. 41) in September 2002 and received final approval by ICHCA's Board of Directors in January 2003. OSHA gave careful consideration to the ICHCA guidelines in the drafting of the proposed and final standards for VTLs.

II. Pertinent Legal Authority

The purpose of the OSH Act is to ''assure so far as possible every working man and woman in the nation safe and healthful working conditions and to preserve our human resources'' (29 U.S.C. 651(b)). To achieve this goal, Congress authorized the Secretary of Labor to issue and to enforce occupational safety and health standards. (See 29 U.S.C. 655(a) (authorizing summary adoption of existing consensus and federal standards within two years of the OSH Act's enactment); 655(b) (authorizing promulgation of standards pursuant to notice and comment); and 654(d)(2) (requiring employers to comply with OSHA standards)). A safety or health standard is a standard ''which requires conditions, or the adoption or use of one or more practices, means, methods, operations, or processes, reasonably necessary or appropriate to provide safe or healthful employment or places of employment'' (29 U.S.C. 652(8)).

A standard is reasonably necessary or appropriate within the meaning of section 3(8) of the OSH Act if it substantially reduces or eliminates significant risk; is economically feasible; is technologically feasible; is cost effective; is consistent with prior Agency action or is a justified departure; is supported by substantial evidence; and is better able to effectuate the Act's purposes than any national consensus standard it supersedes (29 U.S.C. 652). (See 58 FR 16612, 16616 (3/30/1993)).

A standard is technologically feasible if the protective measures it requires already exist, can be brought into existence with available technology, or can be created with technology that can reasonably be expected to be developed. American Textile Mfrs. *Institute* v. *OSHA (ATMI)*, 452 U.S. 490, 513 (1981); *American Iron and Steel Institute* v. *OSHA (AISI)*, 939 F.2d 975, 980 (D.C. Cir 1991).

A standard is economically feasible if industry can absorb or pass on the cost of compliance without threatening its long term profitability or competitive structure. See *ATMI*, 452 U.S. at 530 n. 55; *AISI*, 939 F.2d at 980. A standard is cost effective if the protective measures it requires are the least costly of the available alternatives that achieve the same level of protection. *ATMI*, 453 U.S. at 514 n. 32; *International Union, UAW* v. *OSHA (''LOTO II'')*, 37 F.3d 665, 668 (D.C. Cir. 1994).

Section 6(b)(7) of the OSH Act authorizes OSHA to include among a standard's requirements labeling, monitoring, medical testing and other information gathering and transmittal provisions (29 U.S.C. 655(b)(7)).

All safety standards must be highly protective. (See, 58 FR 16614–16615; *LOTO II*, 37 F.3d at 668.) Finally, whenever practical, standards shall ''be expressed in terms of objective criteria and of the performance desired'' (29 U.S.C. 655(b)(5)).

III. International Aspects

OSHA has developed this final rule in light of international trade considerations. In the Trade Agreements Act of 1979 (''TAA,'' codified at 19 U.S.C. 2501 *et seq.*), the United States implemented the Agreement on Technical Barriers to Trade, negotiated under the General Agreement on Tariffs and Trade. In particular, Congress has indicated that federal agencies may not ''engage in any standards-related activity that creates unnecessary barriers of trade'' (19 U.S.C. 2532). A standard is ''necessary'' in this context:

If the demonstrable purpose of the standards-related activity is to achieve a legitimate domestic objective including, but not limited to, the protection of legitimate health or safety, essential security, environmental, or consumer interests and if such activity does not operate to exclude imported products which fully meet the objectives of such activity.

(19 U.S.C. 2531(b).) The TAA also requires federal agencies to take international standards into account in standards-related activities and to base their standards on the international standards, ''if appropriate'' (19 U.S.C. 2532(2)(A)). However, international standards are not ''appropriate'' if they do not adequately protect ''human health or safety, animal or plant life or health or the environment'' (19 U.S.C. 2532(2)(B)).

Mindful of these international aspects, OSHA has sought to formulate a protective but flexible approach to VTLs in the final rule. As discussed in further detail below, OSHA's requirements for VTLs are consistent with the relevant provisions of ILO Convention 152 and with many of the provisions of the ISO standard and ICHCA guidelines.

Several commentators suggested that deviations from the ICHCA guidelines and ISO standards for VTLs would create unnecessary barriers of trade in violation of the above provisions (Exs. 47–5; 54–2). OSHA does not agree. First, these commenters' positions seem to be premised on the assumption that there is an international consensus about whether to perform VTLs and how they are to be performed. OSHA finds that the record does not support that assumption. While two international bodies have addressed VTLs (ICHCA and the ISO), the ILO refused to adopt provisions allowing VTLs in its Code of Practice (Exs. 47–4, 50–7, 64). Further the record suggests that VTLs are not performed at many ports worldwide. Submissions indicate, without contradiction, that VTLs are not performed in Canada, Tokyo, Rotterdam, Antwerp, and Russia (Tr. 2–285, 2–295; Ex. 62). Maersk stated that it performs VTLs in only 8–10 of its 80 ports of call (Tr. 2–127 to 128). ICHCA's guidelines specifically note that national legislation may prohibit or limit VTLs (Exs. 41, 8.1.1.2 & 8.1.1.5).

Regardless, OSHA does not believe that limiting VTLs to two empty containers creates a ''barrier to trade'' under the TAA. These requirements are applied to vessels regardless of origin and apply to ships arriving from U.S. ports as well as foreign ports. OSHA's regulation does not discriminate, either on its face or in effect, by country of origin or class of shipper. As indicated in the Final Economic Analysis below, the claim that the final rule ''constitutes a barrier of trade seems to be without merit in any economic sense.''

Moreover, even if the regulation did constitute a barrier to trade, it still would not be ''unnecessary'' in the sense of the TAA. As discussed at length in the Summary and Explanation, OSHA has given extensive

consideration to the question of the safety of VTLs, and it has determined that the limitations in the final rule are necessary to protect workers from the significant risk of death or injury inherent in the procedure. Thus, in the terms of the TAA, ''the demonstrable purpose'' of the final rule is ''to achieve a legitimate domestic objective including, but not limited to, the protection of legitimate health or safety * * * interests'' (see 19 U.S.C. 2531(b)). Therefore, the final rule complies with the TAA.

OSHA has also given consideration to the relevant international standards in the area, as required by the TAA (see 19 U.S.C. 2532(2)). Articles 21 through 27 of ILO Convention 152 contain international standards for vessel cargo handling gear, which are intended to protect dockworkers. The United States is not a signatory to either this convention or its predecessor, ILO Convention 32. However, it has nonetheless conformed to them through regulations promulgated by the U.S. Coast Guard, regarding inspected U.S. flag vessels, and by OSHA, regarding other vessels (62 FR 40152). In particular, in its latest revisions to its Longshoring Standard, OSHA updated its vessel cargo handling gear certification requirements to conform to Convention 152's requirements (62 FR 40151–54; 29 CFR 1918.11).

VTLs were not used at the time that Convention 152 was drafted, (Tr. 1–207), and as noted above, there was substantial uncertainty about how it applied to this procedure at the time OSHA revised its Longshoring Standard in 1997 (see 62 FR 40152–53). This engendered substantial study of VTLs, both by OSHA and the international community, as detailed elsewhere in this preamble. The result of this study is that, although the ILO has since clarified that twistlocks used in VTLs are loose gear under Convention 152, VTLs represent a unique cargo operation. The rules and guidance developed by ICHCA and ISO TC 104 reflect an adaptation of Convention 152's loose gear rules for VTLs, given the particular safety issues they pose, rather than a direct application of its requirements. Thus, for example, where the convention at Article 23 requires that loose gear to be ''thoroughly examined and certified'' every twelve months, ISO 3874 Amend. 2 requires only that twistlocks used in lifting be ''periodically examined'' (Ex. 40–9), and ICHCA would allow for a continuous inspection program of such twistlocks (Exs. 41, 8.1.3.3.3 & 8.1.3.3.4).

The final rule takes the same approach towards the convention in formulating rules for VTLs. In most respects—such as keeping twistlocks in good repair and working order, testing and certification before initial use, marking, and inspection before each use—the final rule's requirements are consistent with the convention's. The only significant departure is in the area of the annual thorough examination required by Article 23. Rather than require an annual thorough examination, OSHA has determined that all the necessary elements of a thorough examination of a twistlock may be performed before each lift (see Summary and Explanation below). It has thus required that these examinations to be performed before each lift and this has rendered an annual thorough examination and certification unnecessary. If anything, OSHA's approach may be more protective than that required by the convention.

Convention 152 itself allows variances if the change in question is not less protective (Art. 2.2; Ex. 41, 5.2.6), and as noted above, several international bodies have made their own departures from the annual thorough examination and certification requirement in this context. ICHCA has noted that under the convention: ''It is understood that some countries may impose a higher standard,'' (Ex. 41, 5.2.6), and some countries have already done exactly that (62 FR 40154). OSHA believes that the final rule is within the letter and spirit of ILO Convention 152, and it is therefore continuing its practice of maintaining consistency with the convention.

OSHA also considered ISO 3874 and the ICHCA VTL guidelines in the formulation of this final rule. While consistent in some ways with these documents, the final rule differs from them in at least two significant aspects: It allows VTLs only of empty containers, and it allows VTLs of only two containers—three container VTLs are prohibited. Nonetheless, this result is consistent with the TAA. As comprehensively explained in the Summary and Explanation, the record shows that ICHCA and ISO TC 104 used assumptions (e.g., the number of twistlocks engaged in a VTL and the acceleration forces experienced at the beginning of the lift) that did not adequately represent the forces experienced by corner castings and twistlocks in use. OSHA has used more appropriate assumptions in formulating its final rule. Therefore, OSHA has determined that for the purposes of the TAA, ISO 3874 Amend. 2 and the ICHCA guidelines (to the extent they may be considered an ''international standard'' for purposes of the TAA) are not ''appropriate'' standards upon which to base this final rule because they do not adequately protect ''human health or safety, animal or plant life or health or the environment'' (19 U.S.C. 2432(2)(B)).

IV. Significant Risk

An issue in any OSHA rulemaking is significant risk. In its Notice of Proposed Rulemaking (NPRM), the Agency preliminarily concluded that the procedures required in the proposal would substantially reduce the risk to employees of performing VTLs (68 FR 54298, 54302, September 16, 2003). Mr. Ronald Signorino, who testified at the July 29–30, 2004, hearing on the proposed rule on VTLs as a member of a panel representing the United States Maritime Alliance (USMX), remarked that, before OSHA promulgates a standard, it must find that a significant risk is present and can be eliminated or lessened by a change in practice (Ex. 54–2). He argued that the Agency had not made that threshold finding, as follows:

> There is no evidence in the record which establishes that VTL[s] are unsafe and that operational limitations over and above those appearing within international standards and guidelines are warranted. [Ex. 54–2]

As Mr. Signorino noted, the Supreme Court has held that before OSHA can promulgate any permanent health or safety standard, it must make a threshold finding that significant risk is present and that such risk can be eliminated or lessened by a change in practices (*Industrial Union Dept., AFL-CIO* v. *American Petroleum Institute*, 448 U.S. 607, 641–42 (1980) (plurality opinion)). The Supreme Court ruled that, before OSHA can issue a new standard, the Agency must find that the hazard being regulated poses a significant risk to workers and that a new, more protective, standard is ''reasonably necessary and appropriate'' to reduce that risk. The requirement to find a significant risk does not mean, however, that OSHA must ''wait for deaths to occur before taking any action,'' *Id*. at 655, or ''support its findings with anything approaching scientific certainty.'' *Id*. at 656. ''[T]he requirement that a 'significant' risk be identified is not a mathematical straightjacket.'' *Id*. at 655.

The Act allows OSHA considerable latitude to devise means to reduce or eliminate significant workplace hazards. Clearly, OSHA need not make individual quantitative or qualitative risk findings for every regulatory requirement in a standard. Once OSHA has determined that a significant risk of

material impairment of health or well being is present, and will be redressed by a standard, the Agency is free to develop specific requirements that are reasonably related to the Act's and standard's remedial purpose. OSHA standards are often designed to reduce risk through an integrated system of safety practices, engineering controls, employee training, and other ancillary requirements. Courts have upheld individual requirements based on evidence that they increase the standard's effectiveness in reducing the risk posed by significant workplace hazards. See *Forging Indus. Ass'n.*, 773 F.2d at 1447–1452 (finding ancillary provisions of hearing conservation standard, including requirements for audiometric testing, monitoring, and employer payment for hearing protectors, reasonably related to the standard's purpose of achieving a safe work environment); *United Steelworkers*, 647 F.2d at 1237–1238 (finding lead standard's medical removal protection provisions reasonable).

While OSHA often uses fatality, injury, and illness reports and statistics to support its findings of significant risk, the finding of significant risk does not strictly require a history of injury. As Mr. Signorino noted, there is no evidence in the record of this rulemaking showing a worker injury due to VTL, despite the thousands of lifts that have occurred in the U.S. since 1986. However, evidence in the record does support a finding of significant risk for unregulated VTL operations. First, and foremost, as described in detail later in this preamble,[4] numerous VTL accidents have occurred in which employees were not injured. There is substantial evidence, discussed in more detail later in this preamble, that not all interbox connectors properly engage in VTLs, creating the risk of partial or complete separations. And the record contains evidence of at least nine VTL separations in the United States and Canada over the past 15 years, which are detailed later in this preamble. Any one of these accidents could have resulted in injury to or death of one or more employees. It was simply good fortune that worker injury was avoided. As the Supreme Court noted, OSHA need not ''wait for deaths to occur before taking any action,'' *American Petroleum Institute*, 488 U.S. at 655.

Second, the industry has acknowledged that VTLs are riskier than single lifts. As discussed in the background section of the ICHCA guidelines, ISO Technical Committee 104 recognized that there were potential hazards associated with VTL operations, and the committee asked ICHCA to develop a comprehensive document to deal with all aspects of VTL operations (Ex. 41). This acknowledgment was reinforced by the comments of Jimmy Burgin on behalf of the National Maritime Safety Association (NMSA) and the Pacific Maritime Association (PMA), who stated, ''As an initial matter the TC [NMSA technical committee] recognized that VTL operations are different, and must be treated differently than, normal single container lifts'' (Ex. 50–9). In addition, several individual companies testified that they follow the ICHCA guidelines to help assure the safety of VTL operations (see for example, Tr. 2–103), and some companies supplement the ICHCA guidelines with additional procedures to assure safe VTL handling (see for example, Tr. 2–128).

Third, the handling of individual containers has been determined in previous rulemakings to include risk (62 FR 40142–40144). The lifting of two or more containers cannot be less risky. VTLs introduce additional risk because more equipment can fail (twistlocks, corner castings, the container itself), the loads have a greater sail area that can be affected by wind, the loads have more sway, and VTLs are more difficult to transport on the ground. Also, compared to single lifts, the greater bulk of VTLs obscures more of the crane operator's view and thus potentially increases the likelihood of accidents. Finally, the safe transport of oversize loads and containers is recognized to require special procedures by other transportation interests, such as railroads and highway authorities (see, for example, 43 Texas Administrative Code, Chapter 28, Subchapters A–G).

Fourth, as discussed in detail in the next section of this preamble, OSHA's analysis of the strength of the components involved in VTLs demonstrates that lifting loaded containers in a VTL or lifting more than two containers in a VTL poses a significant risk of failure. It is widely a recognized engineering practice to impose sufficient factors of safety to ensure the safe lifting of cargo. An inadequate safety factor would result in significant risk. Without regulation, the Agency believes that employers would have an economic incentive to lift larger loads in VTLs, either by lifting loaded containers or by lifting more than two vertically coupled containers at the same time, thus reducing the safety factor to unacceptable values and causing a significant risk.

Thus, OSHA finds that VTLs pose a significant risk of injury to workers. The Agency notes that this finding of significant risk is proactive rather than reactive. It anticipates the possibility of injury and death that could result from VTLs conducted without special safety precautions and will regulate those problems before a worker is injured or killed.

OSHA also concludes that the final rule will substantially reduce that risk. Currently, employers are performing VTLs under the Gurnham letter (Ex. 2), which permits VTLs under conditions similar to those contained in the final rule. Several rulemaking participants, including Dennis Brueckner, representing the International Longshore and Warehouse Union (ILWU) Coast Safety Committee, testified that employers were not meeting the conditions set out in that letter when conducting VTLs (Tr. 2–369, 2–386, 2–407—2–408). By promulgating this final rule, the Agency anticipates that the percentage of employers complying with these conditions will increase.

Furthermore, the final rule includes additional provisions ensuring that interbox connectors are sufficiently strong so that they withstand, without failure, the forces that may be imposed during a VTL and provisions ensuring that inspections of interbox connectors, corner castings, and containers are conducted immediately before the lift. By ensuring that this equipment is adequately strong and in good condition immediately before a VTL, the final rule will substantially reduce the probability of failure and resulting accidents and injuries.

V. Summary and Explanation of the Final Rule

This section of the preamble discusses the important elements of the final standard and explains the purpose of the individual requirements. This section also discusses and resolves issues raised during the comment period, significant comments received as part of the rulemaking record, and any substantive changes that were made from the proposed rule. References in parentheses are to exhibits in the rulemaking record (Ex.) or to page numbers in the transcript of the public hearing held on July 29 and 30, 2004 (Tr.) or the Agency's public meeting on VTLs in January 1998 (1998–Tr.).[5]

[4] See the discussion of the issue titled ''Strength of the container-connector system'' under section V, Summary and Explanation of the Final Rule.

[5] Exhibits 100–X, 101–X, 102–X, and 103–X contain the transcripts for the 2-day hearing.

Continued

Except as noted, OSHA is carrying forward the language from the proposal into the final rule without substantive differences.

A. Strength of the Container-Connector System

OSHA originally proposed (68 FR 54298) to permit VTLs, that is, the lifting of two partially loaded intermodal containers, one on top of the other, connected by semi-automatic twistlocks or other interbox connectors under certain stated conditions. The proposal would have allowed VTLs with a maximum total weight of 20 tons (combined weight of the containers and cargo). The proposal also imposed a safe working load requirement for interbox connectors used in VTLs, based on ICHCA recommendations, of 10,000 kg.

Several rulemaking participants strongly objected to OSHA's proposal to permit VTLs of two partially loaded containers (Exs. 8A, 10–1, 11–1B, 11–1C, 11–1G). These rulemaking participants submitted considerable evidence on the safety of VTLs. In light of these objections and this evidence, OSHA has reconsidered the basis on which the Agency preliminarily concluded that lifting two partially loaded containers in tandem is safe.

After considering all of the evidence in the record, OSHA has concluded that the safety of VTLs can only be ensured under ICHCA's safe working load requirements when a maximum of two empty containers are lifted. Evidence submitted to the record reveals that a sufficient margin of safety does not exist, in all situations, when a combined load of up to 20 tons is hoisted in a VTL. In particular, operational considerations and dynamic forces limit the maximum load that can be safely lifted, as discussed fully later in this section of the preamble.

In a VTL, the uppermost container, its bottom corner castings, the interbox connectors, and the upper corner castings of the next lower container must be capable of supporting whatever loads are imposed by containers below the top one. Similarly, if more than two containers are lifted at a time, the intermediate containers, corner castings, and interbox connectors must be capable of supporting all loads below them. Thus, the strength of the container itself and the interbox connector-corner casting assembly is a key issue in the determination of whether VTLs are safe and, if so, under what conditions.

Drawings of a semi-automatic twistlock and the connection between twistlocks and corner castings are shown in Figure 1 and Figure 2. It should be noted that the load-bearing surface area is limited to the overlap between the flat surface of the cone of the twistlock and the inside surface of the corner casting at the top or bottom of the opening. The load-bearing surface area is shown in Figure 3.

BILLING CODE 4510–26–P

Volume 1 (Tr. 1-page) is the transcript for July 29, 2004, and Volume 2 (Tr. 2-page) is the transcript for July 30, 2004.

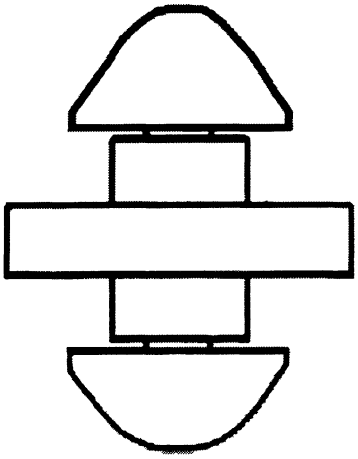

Figure 1—Semi-automatic Twistlock (Source: Ex. 11-6H)

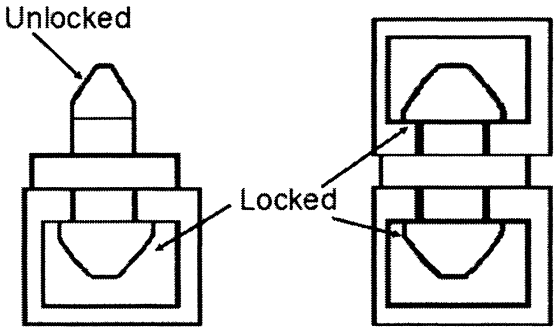

Figure 2—Interbox Connections (Source: Ex. 11-6H)

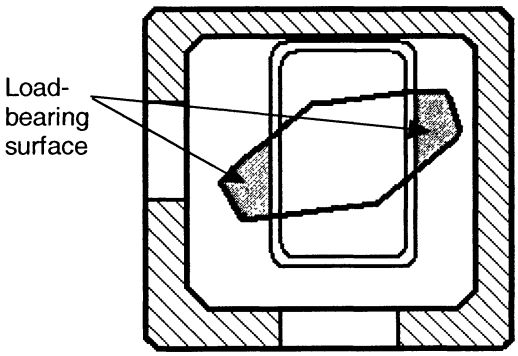

Figure 3—Load-bearing Surface of Interbox Connection (Source: Ex. 41)

BILLING CODE 4510–26–C

An explanation of basic strength of materials theory will clarify the underlying principles on which OSHA is basing its determination in this rulemaking.[6] These principles govern how materials react to external forces imposed on them. To simplify the discussion and avoid the need for the conversion of units between systems, the Agency is using the International

[6] The explanation of strength of materials theory is consistent with the discussion of this topic in Ex. 65–2. The information in this discussion is widely recognized material science.

System of Units exclusively in this discussion and in the analysis of the record that follows.

Stress is a measure of force per unit area within an object. It is the object's internal distribution of force per unit area that reacts to external applied loads. In the following discussion, stress is measured in newtons per square meter (N/m^2).

Strain is an expression of the deformation caused by the action of stress on an object. It is a measure of the change in size or shape of the object. In the following discussion, strain is unitless, though the amount of strain is sometimes given as a percent.

Stress may be applied to a material in a number of ways, including tension, compression, and shear. Compressive stress is stress applied so as to compress the material. Shear stress is stress applied parallel or tangential to the face of the material. Tensile stress, which is the primary concern in this rulemaking, is stress applied to pull a material apart. This is the predominant type of stress that a twistlock experiences during a VTL. The corner casting also experiences compressive and shear stress.

When material is stressed by the application of a tensile force, it will stretch and, when the stress is removed, return to its original size and shape as long as the stress is below the yield strength of the material. When the applied stress exceeds the yield strength of the material, it permanently deforms. When the stress exceeds the ultimate strength of the material, it catastrophically fails, or ruptures. A typical stress-strain curve is depicted in Figure 4.

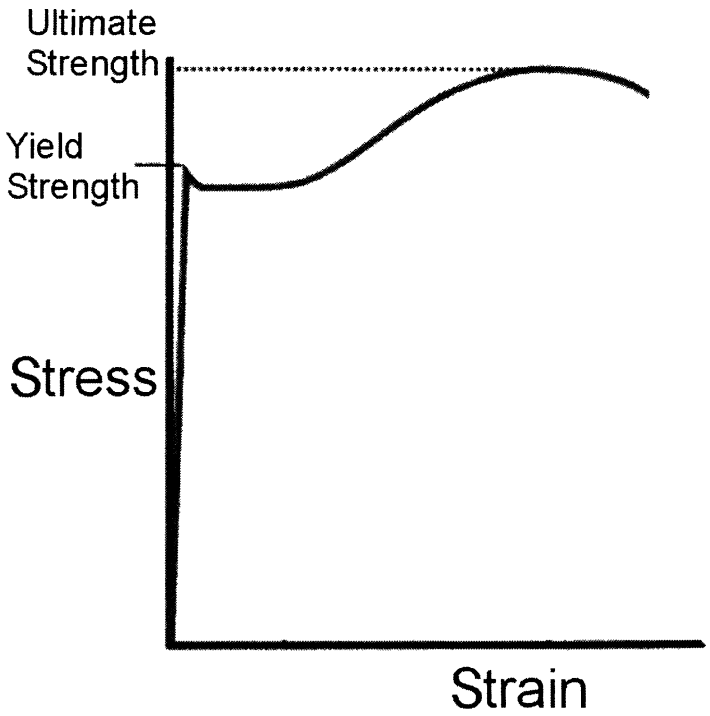

Figure 4—Stress Strain Curve for Steel

To limit the forces on a component to a safe level, engineers usually set a maximum stress limit on the material at a value much less than its yield strength. This is done using maximum rated loads and safety factors. A maximum rated load is the highest load permitted to be carried by the component. A safety factor is the ultimate strength[7] of a material divided by its maximum rated load. A sufficient safety factor will ensure that forces on the component do not approach its yield strength. The appropriate size of the safety factor to be employed is established by engineering judgment and is typically based on such factors as: The accuracy of load estimates, the consequences of failure, the possible effects of wear, and the cost and technological feasibility of overdesigning the component. For interbox connectors, the cost and technological feasibility of overdesign is not a consideration because, as described in more detail later, the design of at least some SATLs currently on the market have sufficient strength to provide an adequate safety factor (Ex. 40–10). In general, the safety factor is adjusted upwards to account for increasing uncertainty about the loads and forces imposed by real-world conditions.

ISO Technical Committee on Freight Containers, Technical Committee 104, develops international standards for the design and testing of freight containers and for container handling and securing (Ex. 41). Standards under the purview of ISO/TC 104 deal with structural issues that relate to the ability of a freight container to be handled and safely transported (Ex. 41). Table 1 lists the relevant ISO/TC 104 standards that relate to VTLs.

[7] As noted earlier, the ultimate strength is the maximum stress a material can withstand before failure, and stress is measured in N/m^2. However, when dealing with components, the cross-sectional area is constant, and loads (in N) are usually substituted in the calculation of safety factors.

TABLE 1—ISO STANDARDS RELEVANT TO VTLS

ISO standard No.	Title
ISO 668:1995	Series 1 freight containers—Classification, dimensions and ratings.
ISO 1161:1984 (Ex. 11–6B)	Series 1 freight containers—Corner fittings—Specification.
ISO 1161:1984/Cor. 1:1990 (Ex. 11–6B)	Technical corrigendum 1:1990 to ISO 1161:1984.
ISO 1496–1:1990 (Ex. 11–6D)	Series 1 freight containers—Specifications and testing—Part 1: General cargo containers for general purposes.
ISO 1496–1:1990/Amd. 1:1993	Amendment 1:1993 to ISO 1496–1:1990, 1 AAA and 1 BBB containers.
ISO 1496–1:1990/Amd. 2:1998	Amendment 2:1998 to ISO 1496–1:1990.
ISO 3874:1997 (Ex. 11–6C)	Series 1 freight containers—Handling and securing.
ISO 3874:1997/Amd. 1:2000	Amendment 1:2000 to ISO 3874:1997, Twistlocks, latchlocks, stacking fittings and lashing rod systems for securing of containers.
ISO 3874:1997/Amd. 2:2002 (Ex. 40–9)	Amendment 2:2002 to ISO 3874:1997, Vertical tandem lifting.

Source: Ex. 41.

ISO 1161 sets detailed specifications for the dimensions, design, and strength of corner castings. The design requirements in this standard call for top corner castings to have design loads for lifting of 150 kN. Bottom corner castings are in most significant respects identical to top corner castings. Therefore, they can be expected to have the same strength.

ISO 1496–1 sets specifications for Series 1 freight containers. The requirements in this standard ensure that such containers are adequately strong for the lifting and in-use conditions they are likely to experience.

ISO 3874 sets requirements for the dimensions and strength of twistlocks. This standard requires twistlocks to have a minimum load-bearing surface of 800 mm^2 and, for those used for lifting, to be capable of withstanding a tensile force of 178 kN without any permanent deformation. The test used to determine compliance with the tensile strength requirement must be made using two corner castings or equivalent devices.

OSHA had relied on two studies, a Swedish National Testing and Research Institute's (SNTRI) study, ''Container Lashing'' (Ex. 11–6H), and a NIST study, ''Strength Evaluation of Connectors for Intermodal Containers'' (Ex. 40–10), to support its proposal. The Swedish study focused primarily on the ability of containers, interbox connectors, and lashing equipment to withstand the forces likely to be imposed while being transported aboard a vessel. However, both studies evaluated the strength of interbox connectors and corner castings.

The NIST study included site visits to port facilities and laboratory tests of interbox connectors. At the time of the NIST study, approximately 12 manufacturers produced most of the interbox connectors used by the shipping industry. NIST contacted U.S. representatives of eight manufacturers, and four provided interbox connectors for testing. For the failure load test of connector shafts loaded in tension, two new interbox connectors were used from each of the four manufacturers, and two used interbox connectors were used from two of the four manufacturers, for a total of 12 interbox connectors.

Test specimens included semi-automatic twistlocks and latchlocks. The engineering study included the testing of twistlocks in tension, twistlock and latchlock assemblies with corner castings in tension and compression, and shafts of twistlocks in tension to obtain the stress-strain relationship. In addition, NIST measured the bearing surface areas of the top and bottom cones of twistlocks and latchlocks on the inner surfaces of the corner castings.

The NIST study revealed that the ultimate tensile loads[8] of the twistlock shafts tested ranged from 562 to 802 kN. The SNTRI study reported similar test results in 1997, with ultimate tensile loads ranging from 477 to 797.1 kN.[9] Although a limited number of used connectors were tested in the NIST study, the test results indicated that, when their respective shafts were loaded in tension, the used twistlocks withstood a greater test load than the new twistlocks (Ex. 40–10). The study also indicated that the strength of a twistlock-corner casting assembly was lower than that of a twistlock alone. The maximum test loads for twistlock-corner casting assemblies ranged from 408 to 710 kN, or roughly 80 percent, on average, lower than the ultimate strength of the twistlock shaft alone. The report described the reason for this as follows:

> [T]he capacity of the assembly is limited by failure of the corner fitting. Failure was brought about by large permanent deformations of the aperture of the corner fitting and/or shearing at the perimeter of the aperture * * * A relatively small bearing area of the cone on the corner fitting caused a concentration of force near the edge of the aperture, and as a result, the edge of the cone sheared through the top plate of the corner fitting.[10] [Ex. 40–10]

ISO 3874 requires that the load-bearing area between a twistlock and a corner casting be a minimum of 800 mm^2. Because stress increases with decreasing cross-sectional area, the bearing area is critical to the ability of the interbox connector to withstand lifting loads. The NIST study showed that the measured bearing area of latchlocks tested on the corner casting was less than that given in ISO 3874. Furthermore, the report stated that the maximum test load for a latchlock-corner casting assembly was as low as 90 kN when the latch was not fully extended. For these reasons, OSHA has concluded that latchlocks are not suitable connectors for VTLs. The report also noted that three of the six twistlocks also failed to meet the ISO provisions on minimum load-bearing area with the largest acceptable opening on a corner casting (these openings are a maximum of 65.0 mm wide). Because the strength of the twistlock-corner casting assembly depends on this load-bearing area, as described in the NIST report, the final rule requires twistlocks used in VTLs to be certified as having a minimum load-bearing surface area of 800 mm^2 when connected to a corner casting with an opening of the maximum width permitted by the ISO standard (65.0 mm).

[8] The ultimate tensile strength of a material is the maximum unit stress that a material can withstand when subjected to an applied load in a tension test. Because stress is force (the load) divided by the cross-sectional area, the ultimate tensile stress is proportional to the maximum tensile load applied to a test specimen during the test. This load is known as the ultimate tensile load.

[9] The Swedish study tested only three semi-automatic twistlocks. Furthermore, the tensile tests were limited to SATLs alone; they were not performed on SATL-corner casting combinations.

[10] It should be noted that the twist lock-corner casting combination failing with the smallest tensile load (408 kN) failed when the cop cone pried off the shaft of the twistlock.

A number of rulemaking participants, including the Institute of International Container Lessors, the Carriers Container Council, Inc., and the USMX, argued that VTL operations were safe up to a total load of 20 tons and, in that sense, supported the proposal (Exs. 10–4, 10–5, 10–6, 36, 37, 47–2–1, 50–12, 54–1–1, 54–2, 54–3, 65–3). In support of their position that VTLs are safe, two of these commenters stated that they were unaware of any reported injuries resulting from lifting vertically coupled containers (Exs. 10–5, 10–6). For example, the Carriers Container Council, Inc. (Ex. 10–6), said:

> The fact that there has not been one reported injury as a result of this practice is evidence that the precautions being applied by terminals performing these lifts are sufficiently protective.

On the other hand, there have been documented VTL events and accidents in the Port of Charleston, South Carolina, in Honolulu, Hawaii, and in Houston, Texas (Exs. 8–A, 11–1–B, 11–1–H, 11–1–K, 11–1–M, 11–3, 11–3–A, 11–3–B, 43–10, 45–1, 61, 62). The International Longshoreman's Association reported that at the Port of Charleston, two 12.2-meter refrigerated containers became uncoupled while in midair (Exs. 8–A, 11–1–B, 11–1–K, 11–1–M, 11–3–A, 11–3–B, 43–10). The ILA also reported two incidents at this port in which the bottom 12.2-meter container of a three-container VTL released in midair (Exs. 11–1–K, 43–10). The ILWU reported two midair separations of the bottom container of two-container lifts in Honolulu, resulting in the lower container crashing to the dock or the deck of the ship, respectively (Exs. 11–1–B, 11–1–H, 43–10, 62). One of these VTLs comprised loaded containers; the other appears to have been empties (Exs. 11–1–H, 62). The ILWU also provided testimony about an event in Canada in which a two-container VTL carrying loaded twistlock bins separated when all four of the twistlocks connecting them broke (Tr. 2–285—2–286, 2–333—2–335).

APM/Maersk reported a VTL separation occurring in Houston while employees were loading a barge with empty containers, in which two twistlocks broke during a lift, causing the bottom container to fall 1.2 to 1.5 meters to the dock (Ex. 61).[11]

The ILWU further argued:

> The ILWU believes that other such accidents have occurred and that there has been poor reporting of them.
>
> * * * * *
>
> The fact that no one has yet been injured or killed as a result of these operations is merely extreme good fortune. [Ex. 11–1P]

Mr. Ross Furoyama, testifying on behalf of the ILWU, stated that in his experience near-misses are not reported (Tr. 2–395). He described what happened as follows:

> [W]hen they are taking [a VTL] up to a ship, there will be instances where they would lift, the back would alligator, because the cones did not activate properly, then it will slam back down, jarring the crane cab operator. This happened numerous times. I couldn't count how many times it happened during a ten hour operation. [Tr. 2–396; see also Ex. 11–1–H]

Mr. Furoyama also testified that he observed corners unlock in VTLs after prelifts as the containers were being lifted (Tr. 2–396). Mr. Matthew Lepore, an ILA crane operator working for Sea-Land in Port Elizabeth, NJ, testified about two separate occasions when a twistlock disengaged as a VTL was traveling from a ship to the dock (Ex. 20). He also testified that he has observed VTLs separate on one end or be attached by only one twistlock (1998–Tr. 236–237).

Mr. Tyrone Tahara estimated that there was approximately one separation for every 40 lifts (Tr. 2–405).

OSHA does not believe that the lack of injuries in VTL operations to date is an indication that these operations are safe. At least eight incidents in this country have been reported in the 15 years since the Agency issued the Gurnham letter to Sea-Land in 1993.[12] In addition, VTLs represent a fraction of the total number of container lifts, as described by the ILWU:

> [A]t least 100,000 single picks of containers are made daily in United States ports. Despite this enormous volume of single container hoists, dropped containers are an extremely rare event. By comparison, there have been relatively few tandem picks of containers during the past five years. According to SeaLand statements, 150,000 to 200,000 vertical tandem lift hoists have been made during this period. This is equivalent to one to two days of standard container single pick operations. Consequently, it is clearly evident that even with this insignificant number of vertical tandem hoists that, statistically speaking, there have been an extremely large number of VTL hoist accidents. [Ex. 11–1–B]

The conditions in the Gurnham letter restrict the number of VTLs to empty containers only. Furthermore, labor agreements in many ports prohibit VTLs. There was also largely unrebutted testimony that partial separations occur, with some witnesses claiming that partial separations are relatively commonplace (Tr. 2–396, 2–405). Although many of these partial separations occurred during prelifts, the frequency at which they occur is a strong indication that a significant portion of VTLs are accomplished with one or more twistlocks disengaged from their associated corner castings. This experience calls into question the assumptions (1) that forces imposed by VTLs would be distributed over four twistlock-corner casting combinations and (2) that forces would be evenly distributed over these combinations. As will be seen later, these are key assumptions made in the calculation of safe working loads conducted by several parties and submitted to the record.

A number of commenters believed that vertical tandem lifting is an unsafe practice regardless of the weight of the load (Exs. 8A, 10–1, 11–1B, 11–1C, 11–1G). Their major concern was disengagement or failure of one or more interbox connectors or corner castings. The position against VTL operations was taken primarily by union groups, such as the International Longshoremen's Association (ILA, Exs. 8A) and the International Longshore Warehouse Union (Ex. 11–1B), as well as other participants: Germanischer Lloyd, the German shipping industry classification society (Ex. 11–1C), W. A. Verwoerd, Inspector, Port of Rotterdam (Ex. 10–1), and former OSHA Regional Administrator James W. Lake (Ex. 11–1G).

OSHA believes that disengagement or the failure of a twistlock to engage the corner casting fully is a significant concern. When this happens, the remaining twistlocks and corner castings must support a greater portion of the load. As noted earlier, this is a concern in a significant portion of the lifts, and the final rule must account for this possibility. For VTLs to be permitted, the final rule must set requirements that are reasonably necessary and appropriate to prevent failure of a twistlock or corner casting during these operations. This can be done by using adequate safety factors and conservative estimates of the ultimate strength of twistlocks and

[11] In addition, as noted in the ANPR, Sea-Land reported two VTL incidents involving twistlocks that would have been avoided by following proper practices. In the first, the VTL separated at one end because the two front twistlocks did not enter the corner castings of the lower container, and as a result Sea-Land instituted a prelift procedure (1998–Tr. 206). In the second, 13.7-meter containers were hoisted in a VTL, against company policy, and the twistlocks released when the VTL struck the crane's legs (1998–Tr. 206–207).

[12] OSHA had issued a similar letter to Matson in 1986. However, unlike Sea-Land, which reported the three incidents on the record, Matson apparently did not have a mechanism to report near-misses associated with VTL operations, and there was evidence in the record that Matson did experience separations that were not reported (Tr. 2–410—2–411).

corner castings in developing the final rule.

During the rulemaking, several parties raised issues as to whether the NIST and Swedish studies properly considered all significant factors in evaluating the safety of VTLs (Exs. 11–1B, 50–11–2). Robert N. Anderson, Ph.D., P.E., an expert in forensic materials (the investigation of materials, products, structures or components that fail or do not operate or function as intended) and metallurgical engineering and sciences, testified on behalf of the ILWU (Ex. 50–11–2). He pointed out underlying problems with the NIST report, as well as the Swedish National Testing and Research Institute's report. According to Dr. Anderson, both reports were incomplete because they lacked data that would assist in determining the dynamic behavior of the interbox connectors during a VTL. In addressing the NIST report, he stated,

> I found in analyzing this report that it does not support using connectors for intermodal containers and moreover, the data shows that the connectors they tested were not suitable for the intended purpose.
>
> * * * * *
>
> In my opinion, the NIST report is incomplete in that it only looks at static or slow applied loads. In addition there is no information on the hardness from heat treating of the connectors, or on their resistance to fatigue loading. However, there is enough information to determine that the connectors are not suitable for intended use. [Ex. 50–11–2]

He also faulted the Swedish study, stating:

> Apparently the SNTRI used an INSTRON testing machine * * * which is suitable only for static slow strain rate loading. Therefore, its shortcomings are comparable to the NIST report, and their work is not appropriate to determining the dynamic behavior of the interbox connectors during a VTL. [Ex. 50–11–2]

NIST made no attempt to conduct a statistically rigorous testing program, but only attempted to assess in broad terms the structural performance of the connectors and identify their failure mechanism and the weakest link. It only tested several twistlocks out of the hundreds of thousands that are in current use, and this is not a statistically significant sample from which a decision can be reached about the quality of SATLs in general. Indeed, the NIST report warned that the results should not be extrapolated to other types of connectors not included in the study (Ex. 40–10).

Another limitation of the NIST study was that it focused on investigating interbox connectors and connector-corner casting assemblies only. No attention was given to the overall structural integrity of the container. As NIST pointed out, the welded connection between the corner casting and the corner post may present a weaker connection than the connector-corner casting assembly (Ex. 40–10).

OSHA has concluded that the testing performed by NIST and the Swedish National Testing and Research Institute does not, by itself, demonstrate what are the strengths of twistlocks and corner casting combinations. As noted earlier in this section of the preamble, the ISO design requirements tightly control the dimensions and material strength of corner castings. This is evidenced by the need to ensure dimensional compatibility so that the containers can be readily stacked for shipment. If container did not closely follow the ISO standards, stacking and transporting the containers would be problematic. For this reason, the NIST testing results are likely representative of existing and future corner casting designs, and OSHA has concluded that further regulation of corner castings is unnecessary. However, as NIST noted, the testing was not of a statistically significant sample of twistlock designs, as this would require testing multiple samples of as many twistlock designs as possible. In addition, even if the testing were representative of all existing twistlock designs, it would not be valid for designs that may be produced in the future. The ISO standards do not control the dimensions of the cones on twistlocks nearly as tightly as they do the corner castings. Therefore, the Agency must look to product standards to determine what strength requirements apply to this equipment.

As noted by Michael Bohlman, Director of Marine Services for Sea-Land Service, who authored a number of papers on freight containers and related technology, the ISO standards require corner castings to safely handle a tensile force of 150 kN over a minimum load-carrying area of 800 mm^2 of the interior horizontal face surrounding the aperture (Ex. 50–10–2). According to his prepared testimony, the ISO standards limit the loading on twistlocks and corner castings used in VTL operations to 75 kN (Ex. 50–10–2). In addition, as noted earlier, ISO 3874 requires twistlocks used for lifting to be capable of withstanding a tensile force of 178 kN without permanent deformation. Mr. Bohlman stated that this results in a structural safety factor of five based on the ultimate tensile strength of the components.

However, this safety factor is apparently based on the results of the tests performed by NIST and the Swedish National Testing and Research Institute, not on design requirements in the ISO standards themselves (Tr. 1–41—1–42).[13] Using a safety factor of five, the ultimate strength of components with a 150-kN safe working load should be 750 kN. As noted earlier, the NIST study found that the ultimate strength of the twistlock-corner casting assemblies they tested was as low as 408 kN. Based on this value, which may not be representative of the weakest combination twistlock-corner casting assembly, the maximum safe working load for a safety factor of five would be 80 kN. Twistlock-corner casting assemblies that were not tested, and those produced in the future might be even weaker.

In addition, as noted earlier, NIST found that some twistlocks had insufficient bearing areas when connected to corner castings with the largest acceptable openings based on tolerances given in ISO 1161 (Ex. 40–10). Furthermore, the twistlock-corner casting combination failing with the smallest tensile load (408 kN) failed when the top cone pried off the shaft of the twistlock (Ex. 40–10). Because the corner casting dimensions and strength are tightly controlled by the ISO standards, the ultimate strength of the twistlock-corner casting assembly is dependent on the bearing surface area of the twistlock and the ability of the twistlock to withstand tensile forces when loaded on this bearing surface.

For these reasons, OSHA does not believe that the ISO standards adequately regulate the ultimate strength of semi-automatic twistlocks when used in combination with a corner casting. Therefore, as explained more fully later in this section of the preamble, the Agency has decided to impose a requirement for all twistlocks used in VTLs to have a minimum load-bearing area of 800 mm^2 and a safe working load of 10,000 kg with a safety factor of five[14] when tested as an assembly with standard corner castings with openings that are 65.0 mm wide. OSHA believes that imposing these requirements will ensure that all components used in VTLs will be strong enough to perform such lifts without failure provided the other conditions imposed by the final rule are met. This requirement will also provide assurance that the calculations are based on valid

[13] There is a provision for a safety factor of five in section 5.1.6 of ICHCA's ''Vertical Tandem Lifting of Freight Containers,'' but this is a guideline, not an international standard.

[14] The minimum ultimate strength of a corner casting meeting this requirement is 490 kN (10,000 kg * 5.0 * 0.00980665 kN/kg).

assumptions about the strength of interbox connections.

OSHA has also determined that a safety factor of five will be sufficient to protect employees from the hazards of component failure and that this safety factor is reasonable and consistent with good engineering practice. ISO Technical Committee 104, which has jurisdiction over ISO standards related to containers, used a safety factor of five in its calculations for developing standards on VTLs (Ex. 50–10–2). A report by ICHCA International Limited, entitled ''Vertical Tandem Lifting of Freight Containers,'' claimed a safety factor of five in their calculations and specifically imposed a safe working load for lifting on twistlocks used for VTLs of 10,000 kg ''on the basis of a safety factor of not less than 5'' (Ex. 41). Michael Bohlman stated that a safety factor of four or five is commonly used in setting standards for cargo handling and securing (Ex. 50–10–2, see also Ex. 41).[15] The Agency has thus concluded that a safety factor of five is reasonably necessary and appropriate.

Testifying on behalf of the USMX, Mr. Michael Arrow, P.E., an expert in the area of container engineering and manufacturing specifications and international standards, testified on the strength of containers and twistlocks. He said:

> On the issue of strength of containers and lift locks, as OSHA acknowledges, the NIST study notes that corner castings may fail before semi-automatic twist-locks fail.
>
> Contrary to the opinion of another commentator, this does not mean that the corner fitting is weak or dangerous, or likely to fail when VTL operation is conducted according to OSHA and ICHCA requirements.
>
> The NIST study tested corner fittings, twistlocks, and combinations of these to destruction in order to determine the load that would cause ultimate failure.
>
> The NIST study concluded that this tensile failure load of the combined corner fitting and twistlock assembly was not less than 408 [kN], or 91,800 pounds, and ranged as high as 710 [kN], or 159,000 pounds.
>
> However, both ISO and ICHCA allow a maximum tensile load of only 75 [kN], or 16,875 pounds, meaning that even the weakest assembly tested has a safety factor of more than five.
>
> Such a safety factor is sufficient with tests to a safe working load that exceeds ISO and ICHCA requirements. It should also not be forgotten that the NIST tested assemblies consist of a twist-lock and a corner fitting.
>
> This means that both components exceed the safe, conservative safe working load. That the corner fitting ultimately may fail before the twist-lock does is technically irrelevant. [Tr. 1–41—1–42]

Michael Bohlman maintained that the ISO-required tests were more than adequate to ensure that intermodal containers are capable of safely performing tandem lifting. In his prepared testimony for OSHA's public meeting in 1998, Mr. Bohlman presented his views on ISO test methods as follows:

> ISO 1496 establishes a series of tests to determine the adequacy of a container to perform its fundamental cargo carrying function within the multimodal operating environment. The tests were devised by ISO TC 104 specifically to test and verify the adequacy of the container to survive in the real world. They are static tests developed with appropriate factors of safety considered to reflect the dynamic loads containers are subject to during transportation and cargo operations. These static tests provide a margin of safety for dynamic, full load operating conditions. Dynamic testing was specifically avoided because it is much more dangerous, less reproducible and more expensive [than] static testing without any demonstrable benefit. [Ex. 18]

In his prepared testimony for OSHA's public hearing in 2004, Mr. Bohlman stated that the ISO Technical Committee 104 concluded that partially loaded containers could be safely handled in a VTL, and the forces to which the containers would be subjected would be within their design strength (Ex. 50–10–2). According to Mr. Bohlman, the committee's conclusion was based on the structural testing of corner castings and twistlocks conducted by NIST and the Swedish National Testing and Research Institute, as well as the committee's own deliberations and calculations. In his prepared testimony, he stated:

> ISO/TC 104 concluded that the existing design and testing requirements contained in the TC 104 family of standards cover VTL operations. We determined that containers, their fittings and the twistlocks specified in the ISO standards have sufficient structural strength to allow VTL operations to be safely carried out within the limits specified in the [relevant ISO] standards. [Ex. 50–10–2]

OSHA has concluded that ISO TC 104 provided for a safety factor of five[16] based, in part, on (1) the ultimate strength of twistlock-corner casting connections being adequately represented by the NIST and Swedish testing and (2) all four twistlock-corner casting connections being fully engaged during VTLs. As explained earlier in this section of the preamble, OSHA has concluded that the NIST and Swedish studies do not, by themselves, demonstrate the ultimate strengths of twistlocks. Because TC 104 relied on the results of these two studies to set safety factors, the Agency further concludes that the analysis performed by TC 104 in setting VTL standards is flawed. In addition, the committee did not account for disengaged connections in their analysis. The Agency believes that it is essential for employee safety to ensure that VTLs are safe even when up to two twistlock-corner casting connections are disengaged. As described earlier, the record shows that it is not uncommon for employees to encounter two disengaged twistlocks during VTL operations. When the twistlocks at two adjacent corners are disengaged, the containers will partially separate and provide evidence during the prelift that the twistlocks are not fully engaged. However, twistlocks at opposite corners may give little indication that they are disengaged during the prelift. In fact, Michael Bohlman, testifying on behalf of USMX, stated that an employee would have to be looking closely to be able to tell that twistlocks on opposite corners were disengaged (Tr. 1–177). Based on evidence from employee representatives (Exs. 43–10, 50–7; Tr. 1–345), OSHA does not believe that employees during the loading or unloading of a container vessel are likely to examine the connections that closely. Thus, OSHA has concluded that VTLs must have a safety factor of five when only two twistlocks, at opposite corners, are engaged.[17]

The ILWU (Ex. 11–1B) raised a number of objections regarding the safety of vertical tandem lifting. Their objections, at least in part, were based on the underlying premise that SATLs were designed to connect and secure

[15] Mr. Bohlman also stated that the safety factor is the ratio between the ultimate strength and the safe working load. However, as noted earlier, ISO standards do not specify the ultimate strength of twistlocks or corner castings. The safety factor in those standards is based on the anecdotal testing performed by NIST and the Swedish National Testing and Research Institute.

[16] Amendment 2, ''Vertical Tandem Lifting'' (July 1, 2002) to ISO 3874, *Series I Freight Containers—Handling and Securing*, added a new section 6.2.5, and two footnotes to that section (Ex. 40–9). The new section requires twistlocks used in VTLs to be ''certified for lifting.'' One of the footnotes reads: ''The certification process envisaged is to use a safety factor of at least four based on the ultimate strength of the material.'' However, ISO TC 104 used a safety factor of five in the ICHCA guidelines (Ex. 41) in sections 5.1.6 and 8.1.3.1.2. The ICHCA guidelines were published in 2003, after Amendment 2 to ISO 3874. In fact, the guidelines call for twistlocks manufactured after December 31, 2002, and used in VTLs to be certified as having a safe working load of 10,000 kg with a safety factor of not less than five. Thus, OSHA has concluded that ISO TC 104 provided for a safety factor of five.

[17] Mr. Bohlman also testified that VTLs could be performed safely when only two twistlocks were fully engaged (Tr. 1–99—1–100). However, in such cases, the safety factor would be reduced by a factor of two. With a safety factor of five with four fully engaged twistlocks, the safety factor is reduced to 2.5 when only two twistlocks are fully engaged, which OSHA believes is unacceptable.

intermodal containers that are stowed on the deck of a vessel, and were not intended to be used to lift multiple containers. The ILWU stated:

> Clearly, twistlocks (SATL's) are not designed to lift containers. As their name indicates, twistlocks are designed and manufactured as locking or securing devices. It is instructive to compare SATL's which are manufactured as securing devices with the twistlocks found on container hoisting beams. Container beam twistlocks are *designed to hoist containers.* They are machined from a block of high grade steel. They are tested and certified and subject to periodic inspection and recertification. They are designed to turn a full 90 degrees into the locked position; this ensures a maximum bearing surface for hoisting.
>
> In comparison, SATL's designed as securing devices are predominantly manufactured from cast parts, using metal considerably inferior to that utilized in container beam twistlocks. Also, SATL's do not turn 90 degrees into a full locking position. Almost all SATL's have a considerably smaller bearing surface than that of twistlocks on container beams. This is because SATL's *were not designed to act as lifting devices.* [Ex. 11–1B, emphasis included in original document]

The ILWU also argued that the age and abuse SATLs receive could contribute to failure over time (Ex. 11–1B). They believe that more failures are likely in the future.

Mr. Ronald Signorino, president of The Blueoceana Company, Inc., and representing the USMX at OSHA's public hearing in 2004, stated that much of the gear manufactured years ago was vastly inferior to that which is the norm in today's marine cargo handling and marine transportation world (Ex. 50–10–1). He stated that the quality of steel used currently in manufacturing gear is far superior in today's products.

Mr. Arrow countered ILWU's assertion that semi-automatic twistlocks were not originally designed for lifting of containers in the VTL operating mode (Ex. 50–10–3-1). Mr. Arrow, representing the USMX, pointed to the NIST study as proof that such twistlocks are more than capable of handling VTL lifting stresses. He also disputed ILWU's assertions regarding safe working strengths of connectors relative to their history and age. He claimed that the NIST study selected both well used and new test specimens and that the results of their testing revealed that some used specimens were stronger than the new specimens.

Dr. Anderson testified that the likely reason for the increased strength of the well used twistlocks was that they had been work hardened, giving them extra tensile strength but also making them more brittle (Tr. 2–255—2–256). However, as noted in a posthearing submission (Ex. 65–2), the plastic deformation that occurs when a material is loaded beyond its yield point does not result in an increase in ultimate strength. In his posthearing submission, Dr. Anderson replied that the evidence he examined did not address the cause of the higher maximum test load for used connectors found in the NIST report (Ex. 68–1). He concluded:

> Since no other metallurgical testing was performed by NIST or LPI on used connectors and no further data is available, the logical conclusion is that the connectors have strain hardened by plastically deforming. This would produce an increase in yield strength, a reduced toughness and increased sensitivity to stress corrosion cracking. More importantly, it indicates that the used connectors were over stressed and plastically deformed during their use. [Ex. 68–1]

During use, twistlocks are subjected to varying dynamic and static forces. Their use to keep containers from displacement while at sea imposes compression and shear forces (Tr. 1–45—1–46). Their abuse at ports during container stacking and unstacking, with containers slamming against them and with their being dropped to the deck and to ground (Tr. 2–396—2–397, 2–404), could strain harden, or cold work, the twistlocks and increase the yield strength, if not the ultimate strength, of the twistlocks. Dr. Anderson's point that cold working the twistlocks also makes them more brittle, and thus more subject to cracking, was uncontroverted. At a minimum, this evidence points to a need for an examination of each interbox connector before use in a VTL to ensure that there is no obvious evidence of cracking.

There is insufficient evidence in the record to determine why the used twistlocks had higher ultimate strengths than new ones. It could be that newer designs have less strength, or it may simply be an indication of the range of strengths of these devices. The fact that used twistlocks had higher ultimate strengths has no effect on OSHA's determinations in this rulemaking. As explained previously in this section of the preamble, the Agency has concluded that it cannot rely solely on the NIST and Swedish tests to determine the ultimate strength of twistlocks. In any event, it is the minimum ultimate tensile strength of twistlock-corner casting connections that must be used to calculate the maximum safe working load. This ensures that the minimum acceptable safety factor is met for the weakest available combination. The standard's requirement that twistlocks used in VTLs have a minimum safe working load of 10,000 kg with a safety factor of five when connected to corner castings with openings that are 65.0 mm wide will ensure that the interbox connections can safely support VTLs under the worst reasonably anticipated conditions.

The ILWU was also concerned about the strength of welds in corner castings and posts, frequently finding them loose, damaged, or improperly connected.

> Union mechanics regularly discover improper attachment of lower corner castings to corner posts and faulty repair work. Frequently, lower corner castings are discovered to have been ''tack welded'' back into place or welds are found to have no penetration. Often there is a lack of fusion of ferrous metals even when welding has been done. It is not unusual for ILWU mechanics to have to remove a container's cargo and the container floor to properly repair bottom corner castings. [Ex. 11–1B]

Mr. Arrow replied that ISO/TC 104 and ICHCA developed standards, testing procedures, and guidelines for vertical tandem lifting that takes these factors into account (Ex. 50–10–3-1).

OSHA agrees, in part, with Mr. Arrow. The Agency believes that the ISO standards provide adequate assurance that the ultimate strengths of the welded connection of the corner casting to the container and the container corner posts are sufficient for VTLs. After all, the strength of these components must be adequate to ensure that lifts of single containers, which when loaded can weigh substantially more than the total weight of all the containers in a VTL,[18] can be performed safely. Inadequately strong welds or corner posts would lead to container failures during single-container lifts, and evidence in the record shows that problem welds are detected in visual inspections and corrected (Tr. 1–44—1–45). The forces on these components in a VTL meeting the requirements imposed by the final rule will generally be no higher than the forces imposed when a single, fully loaded container is lifted. In fact, a bad weld would pose a greater hazard for a fully loaded container lifted alone because the forces on the weld would be higher during such a lift than during a VTL. Thus, OSHA believes that the condition of welds merits no greater consideration for VTLs than for lifts of single containers loaded to their maximum weights. The final rule addresses the adequacy of welds by requiring visual inspection of the container immediately before a VTL is conducted and

[18] Loaded containers with a maximum gross mass of more than 30,000 kg are not uncommon.

prohibiting VTLs when welds are found to be defective.

In his notice of intention to appear at the 2004 public hearing, Dr. Anderson further criticized the failure to consider dynamic forces. He stated that he had reviewed prepared testimony and the reports that were submitted to OSHA on vertical tandem lifting (Ex. 50–8). He claimed that a number of presenters, safety panels, groups and associations that had calculated the effect of wind speed on a multiple container lift made errors in their calculations by considering all forces to be constant. He stated that no consideration was given to gusts of wind or wind shear, and consequently ''the dynamic situation is ignored and the static situation is put forward as the only issue.'' He requested that OSHA do further testing and that strain gage data from the connectors and corner castings should be collected during actual vertical tandem lifting to determine the actual load dynamics experienced by the connectors. Dr. Anderson suggested that NIST be asked to repeat their tests or to show the full results from their tests of used connectors. In addition, he felt that NIST should determine the damage tolerance of the connectors in normal use, the fatigue behavior of the connectors, and the susceptibility of the connectors to stress corrosion cracking.

Mr. Bohlman stated that the ISO Technical Committee considered the maximum wind loading that could be imparted to an interlocked VTL unit of containers by a 100-km/h wind, the tare weight of the coupled empty containers, and the weight that could result from the cargo within the containers (Ex. 50–10–2). He argued that a structural safety factor of five was used in the calculations carried out by ISO. In addition, he stated that the technical committee used a constant wind load equivalent to an additional 28.9 kN load inside the coupled containers in the calculations to account for wind loading. Mr. Bohlman stated that, based on these considerations, the ISO concluded that a gross weight of up to 219 kN could be safely handled as a VTL.

USMX and the Pacific Maritime Association engaged Lucius Pitkin, Inc., Consulting Engineers to perform strain gage tests on VTL components in simulated terminal conditions (Ex. 65–1). In its report, the consulting firm, which specializes in engineering analysis and failure investigation, responded to questions raised at the hearing concerning the adequacy of reliance on the NIST and Swedish reports. Lucius Pitkin's report presented the results of a series of strain gage and accelerometer tests of twistlocks and container corner castings performed during vertical tandem lifting and horizontal movement out over the water (Ex. 65–3). Carol Lambos, the attorney representing USMX, submitted the report in December 2004 during the posthearing comment period. It addressed some of the questions raised by Dr. Anderson at the hearing as follows:

> The results of the strain gage tests during two and three 40 foot cargo container lifts carried out by LPI on November 1, 2004 at the APM Terminals Port Newark, NJ facility indicate that the strain rates that occur during VTL lifting are intermediate loading rates. Also, all of the maximum strains measured during the container lifts indicate that the stresses in the twist locks and corner castings are significantly less than the yield stress, Sy, that would be expected for the materials used in the twist locks and corner castings. [Ex. 65–3]

As noted by Michael Arrow, static testing is commonly used in the testing, design, and standardization of containers, and dynamic forces are accounted for using adequate safety factors (Tr. 1–55—1–56).[19] The Agency generally agrees with Mr. Arrow and believes that most dynamic forces can be accounted for by selecting an appropriate safety factor, by limiting the maximum load imposed on interbox connections during a VTL, and by limiting the wind speed during which VTLs are permitted. However, OSHA has concluded that dynamic forces should also be considered in the calculation of forces imposed during VTLs. Consequently, in determining the maximum safe working load for a VTL, the Agency has accounted for dynamic forces in two ways. First, OSHA has considered the lack of complete information on the dynamic forces imposed during VTLs in determining what an adequate safety factor is. Second, in calculating the maximum forces that the final rule allows to be imposed, OSHA has included forces imposed by accelerating the load during a lift and by the wind. In any event, the Agency does not believe that testing interbox connections to determine their strength under dynamic conditions, as suggested by Dr. Anderson, is necessary. Like the NIST and Swedish tests, dynamic tests would also be limited to existing twistlock designs and would likely be conducted on a small sample of existing designs to limit the cost of testing. Therefore, in using this two-fold method of accounting for dynamic forces, the Agency has adequately considered dynamic loads in setting the final rule and has concluded that further dynamic testing is unnecessary.

Determination of maximum safe loads. Guidance for calculating forces on twistlocks and corner castings in VTLs is presented in ''Vertical Tandem Lifting of Freight Containers,'' a paper authored by ICHCA International (Ex. 41). Appendix 4 of that document is a technical and engineering analysis of VTL operations. This analysis considered: lifting up to three containers vertically; the effect of wind speeds up to 100 km/h; and the forces involved in lifting containers of different sizes. The analysis assumed that all four twistlock-corner casting connections were fully engaged, assumed that a safe working load of 75 kN provided a safety factor of five based on the NIST and Swedish testing, and determined the safety of the lift based on the forces at the top corner castings of the top container in the lift.

OSHA will follow the ICHCA methodology in calculating forces imposed on interbox connections during VTLs, except that the Agency is substituting more restrictive assumptions about the capabilities of these connections. As discussed earlier in this section of the preamble, OSHA has determined that it is necessary to include the following conditions in the calculation of a safe working load for VTLs:

(1) The ultimate strength of the twistlock-corner casting connection is 490 kN (10,000 kg safe working load with a safety factor of five) as required by the final rule (the ICHCA analysis assumed that the ultimate strength was at least 375 kN);

(2) The safety factor is five as explained earlier in this section of the preamble (the ICHCA analysis also assumed a safety factor of five);

(3) The calculations must account for the dynamic loads imposed by lifting the load and the wind (the ICHCA analysis only calculated loads imposed by the wind); and

(4) Two twistlock-corner casting connections on opposite corners of vertically coupled containers are carrying the entire load (the ICHCA analysis spread forces across four fully engaged interbox connectors).

In addition, the Agency has concluded that the only connections to which this analysis should apply are connections involving SATLs. In other words, OSHA has only calculated the loads on fully engaged SATLs. As noted by the ILWU, the connection of the spreader bar to the top of the container

[19] Mr. Arrow called this ''static equivalency,'' in which higher loads are assumed than are actually expected to take place under static conditions. Thus, the higher forces caused by dynamic factors are accounted for by considering higher static loads.

is made through high quality, fully rated equipment specifically designed to lift containers and generally subject to the gear certification requirements of 29 CFR Part 1919 (Ex. 11–1B). The spreader bar to top container attachment must be capable of supporting its rated load in any single container lift. Loads imposed by VTLs on the top container's corner castings, the twistlocks on the spreader bar, and the spreader bar itself are no greater than the loads imposed in lifting a single container loaded to its maximum gross weight. Consequently, OSHA is not placing any additional limits on the spreader-bar-top-container connection beyond those imposed in lifting a single container. In other words, the total weight of the VTL lift must still be within the maximum load rating of the crane and spreader bar.

It could be argued that some factors that OSHA included in its strength analysis (that is, assuming that only two interbox connectors are fully engaged, that a force of acceleration equal to 2.0 g is applied (which is explained fully later in this section of the preamble), and that a maximum wind force of 100 km/h is imposed) should be accounted for by the safety factor rather than applying the safety factor after considering those factors. OSHA believes that its analysis is the correct one. The 2.0-g force due to acceleration will be present in every lift. The Agency believes that it is essential that the interbox connector-to-corner casting assembly be capable of withstanding this force within its rating (that is, before the safety factor is applied). Similarly, the effect of unengaged interbox connectors, which happens on a regular basis, must be accounted for in the rating of the system. If the analysis ignored those two factors, there would be little difference between the ultimate strength of the system and the expected load under very typical conditions. The remaining factor, the wind, could have been adjusted downward to match the maximum wind speed permitted under the standard. However, ICHCA used a 100-km/h wind speed in their calculations, and the difference in force between that imposed by the 55-km/h maximum wind speed allowed by the standard and the 100-km/h speed used in the analysis is relatively small. OSHA's conclusions on whether to require containers lifted in VTLs to be empty would be the same with either wind speed.

Under OSHA's analysis, the safety factor accounts for other unplanned, but not unexpected additional forces, such as those that could be caused by contact with obstructions during movement of the VTL (see 1998–Tr. 206—207). For example, if the VTL contacted an obstruction during descent and then slipped off that obstruction, there would be an additional force caused by the deceleration of the containers as the slack in the load line was taken up. The safety factor also helps counteract failures in work practices necessary to comply with the final rule. For example, a defective interbox connector might be missed during inspection, or employees might have failed to determine that a loaded container was not empty. Thus, the Agency has determined that its analysis takes a reasonable, and not overly conservative, approach to calculating forces during a VTL.

In addition, OSHA's analysis looks only at the connection between the top and bottom containers. This approach is less conservative than the approach taken in the ICHCA analysis, which examined forces at the connection between the top container and the spreader bar. OSHA's analysis considers only the forces in play where there is a concern about the adequacy of the devices used to support the load (that is, the interbox connectors and corner castings). ICHCA's analysis examines the strength of devices that might sustain even greater forces during single-container lifts.

For these reasons, the Agency believes that its approach is reasonable and not overly conservative.

To perform the calculations used in the analysis, OSHA must first determine the magnitude of forces due to acceleration from lifting the load and due to the wind. Lucius Pitkin measured the acceleration that occurs during a VTL and included the results in its report (Ex. 65–3). The findings show that the maximum acceleration resulting in tensile forces in the twistlocks is approximately 2.0 g.[20] The force imposed by this acceleration is given by the following formula:

$$F = m \times a$$

Where:
F = force,
m = mass of the load, and
a = acceleration.

This force is in addition to the weight of the load.

The forces imposed by the wind can be calculated using the American Bureau of Shipping formula, as was done in the ICHCA paper (Ex. 41):

$$F_W = 0.6203 \times C_H \times C_L$$

Where:
F_W = force caused by the wind (in kN)
C_H = container height
C_L = container length.

This formula assumes a wind speed of 100 km/h, which is higher than the 56 km/h permitted by the final rule. (The maximum permitted wind speed is discussed later in this section of the preamble.) The ICHCA paper performed its calculations with a wind speed of 100 km/h, which OSHA has determined is appropriate. This accounts for unanticipated wind gusts substantially above the maximum permitted wind speed. Paragraph (g)(3) of § 1917.45 requires rail-mounted bridge and portal cranes located outside of an enclosed structure to be fitted with an operable wind-indicating device. OSHA believes that employers will generally rely on these devices or on weather reports to determine wind speed. Because their settings are based on manufacturers' recommendations, the warning devices may be set higher than the maximum wind speed allowed for VTL operations. In addition, weather reports may not always include maximum wind gusts. Consequently, OSHA believes that VTLs may experience higher actual wind speeds under real-world conditions than permitted by the rule. Furthermore, calculating forces based on a higher wind speed than permitted by the final rule will help account for any dynamic forces imposed by the wind that are in addition to the calculated static force.

The force from the wind on the containers being lifted is assumed to be perpendicular to the length of the containers. This results in the maximum force. This horizontal force must then be converted to the vertical tensile force on the interbox connection using moment arms.[21]

OSHA is performing the calculations assuming a 12.2-meter, high-cube container equivalent to case I in the ICHCA paper (Ex. 41).[22] This case represents the worst general scenario for lifting more than one container at a time. Each of these containers is 12.2 meters long, 2.44 meters wide, and 2.90 meters high.

The ICHCA paper calculated the worst-case wind force with all four connections intact. However, as noted previously, OSHA is assuming that only two connections diagonally opposite each other are intact. Thus, OSHA's calculations must double the force on each connection (as calculated in the paper) because there is only one

[20] g represents the constant acceleration of gravity, or 9.8 meters per second squared.

[21] A moment arm, which is also known as a lever arm, is the perpendicular distance from the center of rotational motion to the line of application of force.

[22] Container sizes are typically characterized, in part, by their length in English units. Standard container lengths are 6.1 and 12.2 meters, and the containers are known as 20-foot and 40-foot containers, respectively.

connection on the windward side. In addition, OSHA is only concerned with the contribution of the wind on the connection between the topmost container and the next container down. This is equivalent to the force imposed by the top container in a two-container-high VTL. The ICHCA paper calculated the force on each of the top two windward connections as 6.5 kN. Consequently, under OSHA's assumptions, the force on the single windward connection between the top container and the bottom container is 2×6.5, or 13.0 kN.

The force of the wind on the connections must be added to the weight supported by each connection. The maximum tare weight (the empty weight) of a container is 4.5 metric tons, which results in a force of 22 kN in each connection. However, as noted earlier, this weight is accelerated during a VTL, with a maximum of 2.0 g of acceleration. The force from this acceleration must be added to the force due to the wind and the force due to the weight of the container to determine the baseline force on each of the two intact connections between the top container and the bottom. Thus, the total maximum force imposed by an empty bottom container on each interbox connection is $13.0 + 22 + (2 \times 22)$, or 79 kN. Applying a safety factor of five to this figure yields 395 kN.

Thus, the interbox connections must have an ultimate strength of at least 395 kN to account for an adequate safety factor for the heaviest empty container. This leads OSHA to the following conclusions:

First, the Agency must ensure that interbox connections have an ultimate strength at least equal to this value. Therefore, OSHA has concluded that the proposed requirement for a minimum safe working load of 10,000 kg with a safety factor of five (490 kN) is reasonably necessary and appropriate.

Second, as discussed in more detail later in this section of the preamble, the Agency has decided to limit VTLs to empty containers only. Although lifting VTLs with a maximum load that imposes a tensile force of 98 kN (equivalent to the 10,000-kg safe working load) on interbox connections of the required ultimate strength would yield a safety factor of at least five, OSHA has concluded that, without separately weighing the containers, there is no ready and reliable way to determine the weight of the bottom container and its load during VTL operations. In addition, OSHA believes that the difference between the 79-kN force arising from the tare weight of the container and 98 kN is too small to permit even the lightest loaded containers to be lifted. With the heaviest containers, the maximum load that could be safely lifted in a VTL is only 12.7 kN, or a little more than 1295 kg (1.25 tons).[23] Although it might be possible to select lighter containers with full loads that provide a sufficient margin of safety, there are other reasons why the final rule does not permit lifting loaded containers in a VTL, as described in more detail later in this section of the preamble.

Conclusion. OSHA had proposed to allow VTLs of two containers with a maximum load of 20 tons using twistlocks with a safe working load of 10,000 kg. The proposal was based primarily on data provided by NIST that twistlocks and corner castings were sufficiently strong to lift containers connected vertically in tandem safely. Based on evidence submitted during the rulemaking, OSHA has concluded that:

(1) The NIST study does not adequately represent the strength of all current twistlocks or of twistlocks designed in the future;

(2) It is not uncommon for one or more interbox connectors to be disengaged during VTL operations; and

(3) Existing analyses performed by the ISO technical committee and ICHCA do not fully consider loads imposed by acceleration or the consequences of the previous two factors.

OSHA has performed its own rigorous engineering analysis based on evidence in the record, as described previously, and has concluded that VTLs are safe provided that the interbox connectors have a minimum load-bearing surface area of 800 mm^2 and a minimum safe working load of 10,000 kg with a safety factor of five and provided that the containers are empty.

1. Two-container or Three-container VTLs

OSHA proposed to allow VTLs of no more than two ISO series 1 containers, with a total weight (containers plus cargo) of up to 20 tons. However, ISO standards and ICHCA guidelines on VTLs would allow up to three containers with the same total weight. In its proposal, OSHA requested comments on whether three-container VTLs of up to 20 tons could be handled as safely as two-container VTLs with the same weight limitation.

Several rulemaking participants recommended that three-container VTLs be permitted by the final rule (Exs. 43–7, 47–1, 47–2–1, 47–5, 54–2; Tr. 1–49, 1–76, 1–109). Several pointed to international standards and the ICHCA guidelines as evidence of the safety of three-container VTLs (Exs. 47–1, 47–2, 47–2–1, 50–10–1). Others pointed to international experience with three- and even four-container VTLs (Exs. 47–1, 47–5, 50–10–1, 50–10–2, 54–20). For example, in his prepared testimony for the 2004 public hearing, Mr. Ronald Signorino, representing USMX, stated:

> OSHA has proposed a regulation that limits a VTL unit to two container tiers. The agency has attempted to [buttress] such a limitation by stating that practical VTL experience in the United States is confined to the two container tiers. This simply does not address the issue that operationally three container tiers are handled in VTL configurations efficiently and safely elsewhere in the world. [Ex. 50–10–1]

Other arguments for allowing three-container VTLs concerned the strength and durability of containers, corner castings, and interbox connectors (Exs. 43–7, 47–5, 50–12). These comments have been addressed earlier in this section of the preamble. OSHA's conclusions on the issue of whether to permit three-container VTLs are based, in part, on an analysis of the strength of containers, corner castings, and interbox connectors. It is clear from this analysis that the corner casting-interbox connector assembly does not have sufficient strength to perform three-container VTLs safely. The analysis shows that the maximum force on either of the two corner casting-interbox connector assemblies is 98 kN. A two-container VTL imposes a force of 79 kN on each assembly. The addition of a third container would roughly double this amount to 158 kN, far exceeding the 98-kN limit to achieve a safety factor of five.

However, OSHA has not decided to limit VTLs to two containers simply based on insufficient strength. The Agency has weighed the evidence in the record and has concluded that, even if the system were strong enough to perform three-container VTLs safely, other factors make three-container VTLs too hazardous.

According to some witnesses at the 2004 pubic hearing, as VTLs increase in size and weight, there is greater potential for helicopter effects during crane operations. This effect can cause the containers to spin out of control because of wind lift or uneven loading or both (Tr. 1–119, 2–350—2–351). The witnesses explained that, as loads get larger, they become more difficult for

[23] This is calculated as follows: $(98 \cdot 79) * 2/3) = 12.7$ kN. The total additional force would be triple the force from gravity alone because of the force from accelerating the load. Consequently, the allowable additional force would be one third of the extra force due to weight alone. In addition, the additional force would be spread over two interbox connectors, so the total additional force would be double that for a single interbox connector.

the crane operator to control when moving or landing the load. For example, under questioning from an OSHA representative, Mr. Michael Bohlman explained why ICHCA limited VTLs to three containers at a time as follows:

> MR. MADDUX: Yes. What I'm hearing is, when you went from three to four containers, that you had more sway.
>
> MR. BOHLMAN: Well, you have a less compact, harder unit to control because it's bigger.
>
> * * * * *
>
> MR. MADDUX: As the bulk gets bigger, it gets more difficult to control, more difficult to land.
>
> MR. BOHLMAN: * * * It's just [the] size, the effect of external forces, the pendulum effect that gets greater as the size gets bigger. [Tr. 1–119]

Mr. Jerry Ylonen, testifying on behalf of the ILWU, stated that he had experienced the helicopter effect firsthand and noted that it introduces such hazards as swinging the load into an adjacent bay or into a truck waiting for a load being lowered, endangering employees working in the bay or the truck driver sitting in his or her cab (Tr. 2–350—2–351).

OSHA has concluded that the risk of employees being seriously injured by these hazards is significant. Mr. Ylonen testified to the presence of these hazards in single container lifts and argued that two- and three-container VTLs would be catastrophic (Tr. 2–351). With a wind speed of 100 km/h, the wind force on two containers connected vertically would be a maximum of 43.9 kN. On three containers connected vertically, it would be a maximum of 65.8 kN. The sideways force on a three-container VTL would thus be 50 percent greater than the sideways force on a two-container lift. Based on the testimony of Mr. Ylonen and the substantial side forces on the containers during VTLs, OSHA believes that three-container VTLs would not provide a sufficient margin of safety from the helicopter effects of the wind.

In addition, transporting stacked containers around terminals presents tipover hazards about which several hearing participants expressed concern (Tr. 2–227, 2–283, 2–424). There is evidence in the record that tipover accidents have occurred in the past (Tr. 2–295, 2–358—2–359). Three-container VTLs would likely entail transporting containers stacked three high during VTL makeup. Because containers stacked three high would have a higher center of gravity, transporting them would pose a greater tipover hazard than transporting single containers or even containers stacked two high. Thus, OSHA is also concerned that permitting three-container VTLs would lead to an increase in the number of tipover accidents.

For these reasons, OSHA has concluded that the risk of serious injury to employees during three-container VTLs is too high, and the final rule does not permit such lifts.

Mr. Michael Bohlman, representing USMX, was concerned that the proposal did not specifically address tiers of containers in a VTL (Ex. 50–10–2; Tr. 1–75). Instead, he noted, the proposal limited VTLs to two containers. Mr. Bohlman testified on this point as follows:

> One of the concerns that I have, reading the OSHA proposed rule, is that OSHA does not talk about tiers, but talks about numbers of containers. Regardless of whether it's two or three containers that they decide is the right number, if they don't talk about tiers of containers, there's going to be confusion as to what's actually meant.
>
> When we start looking at unique spreader configurations that are in existence and are being safely used such as a twin-lift spreader that would allow, in a two-container configuration, a four-container VTL lift, or in a three-container, three-tier configuration, a six-container lift.
>
> So I think it's very important that, when we do have the final rules, that they talk about tiers of containers being lifted and not number of containers. [Tr. 1–75]

OSHA's analysis of the safety of VTLs is based on the capability of two single containers connecting vertically to maintain a safety factor of five during lifting. As long as the tiers are lifted so that each set of two vertically connected containers is not connected to the other containers, then each vertically connected pair will be considered as separate VTLs for the purpose of the final rule. Therefore, tiers connected in such a manner are permitted by the final rule.

However, if the containers in a tiered VTL are connected horizontally, then some of the assumptions made in OSHA's strength analysis would be invalid. For example, if the bottom tier of two two-container VTLs is connected horizontally, then it would be possible for fewer than two interbox connectors to be fully engaged for each VTL. The connection of the bottom tier of containers could mask, during the prelift, the possibility that only a single interbox connector is fully engaged for one of the sets of vertically coupled containers. This would overload the single interbox connector-corner casting assembly for that portion of the VTL. Consequently, OSHA would consider containers coupled horizontally as counting toward the maximum of two containers permitted in a VTL by final § 1917.71(i)(2). Therefore, tiers with horizontally coupled containers would be prohibited by the final rule.

2. Empty or Partially Loaded Containers

A related issue is whether the standard should set a limit on the gross weight of containers and their loads lifted in a VTL or require that only empty containers be lifted. The proposed standard, which was based on ISO standards and the ICHCA guidelines, would have limited VTLs to a combined weight for load and containers of 20 tons.[24] Some rulemaking participants argued that, if VTLs were to be permitted, then the final rule should require containers to be empty (Exs. 43–5, 44–1, 54–30–2). Other rulemaking participants supported OSHA's proposed 20-ton limit (Exs. 10–4, 10–5, 10–6, 36, 37, 47–2–1, 50–12, 54–1–1, 54–2, 54–3, 65–3). No one urged the Agency to adopt a substantially higher weight limit.

The ILWU and the ILA argued that lifting loaded containers in a VTL was unsafe (Exs. 43–5, 54–1, 54–30–2). The ILWU stated that inaccuracies in the paperwork describing the weights of loaded containers could lead to overloaded VTLs exceeding the crane's capabilities (Ex. 43–5). The ILA argued that it is likely that loaded containers will have errors in weighing and that overweight lifts would be attempted if loaded containers were permitted to be lifted in a VTL (Ex. 54–1).

As noted previously, a number of rulemaking participants, including the Institute of International Container Lessors, the Carriers Container Council, Inc., and the USMX, argued that VTL operations were safe up to a total load of 20 tons (Exs. 10–4, 10–5, 10–6, 36, 37, 47–2–1, 50–12, 54–1–1, 54–2, 54–3, 65–3). They reasoned that the lack of accidents (Exs. 10–5, 10–6) and the strength of containers, corner castings, and interbox connectors (Exs. 47–2–1, 50–10–2) demonstrate the safety of allowing lightly loaded containers to be lifted in VTLs.

As discussed previously, OSHA has concluded that the lack of injuries in VTL operations does not prove their safety and that the existence of a substantial number of incidents indicates the need to regulate VTLs to ensure that they are performed safely. Furthermore, existing experience in the U.S. is based on compliance with the Gurnham letter, which requires containers to be empty. In addition, OSHA's analysis of the strength of

[24] The ICHCA guidelines and ISO standards set a limit of 20,000 kg (22 tons, or 20 metric tons), slightly more than OSHA's proposed 20-ton limit.

containers, corner castings, and interbox containers shows that these devices are not capable of performing VTLs weighing 20 tons with a safety factor of five when only two interbox connectors are fully engaged. In fact, the analysis demonstrates that, with the heaviest containers, only an additional 1295 kg is available as load to ensure a safety factor of five.

OSHA also agrees with the ILWU and the ILA that errors in determining the weights of loaded containers could lead to overweight VTLs. Limiting VTLs to empty containers also protects against shifting or uneven loads, which could overload one of the corner casting-interbox connector assemblies.[25] Furthermore, permitting VTLs involving only empty containers helps ensure compliance, as it will be relatively easy to ascertain that a container is empty by visual observation. On the other hand, the weight of each loaded container would have to be individually measured to ensure the safety of a VTL of loaded containers.[26] For these reasons, the Agency has decided to limit VTLs to empty containers only.

B. Training

With respect to VTL operations, OSHA did not include specific training requirements in the proposed rule. However, existing Marine Terminals and Longshoring standards address crane operator training in §§ 1917.27(a)(1) and 1918.98(a)(1), respectively. Those standards require that only an employee determined by the employer to be competent by reason of training or experience, and who understands the signs, notices, and operating instructions and is familiar with the signal code in use, may operate or give signals to the operator of any hoisting apparatus.

As noted earlier in this section of the preamble, the International Safety Panel of ICHCA has established comprehensive guidelines that could potentially serve as a foundation for domestic and international VTL operations (Ex. 41). The guidelines stipulate that ''all persons connected with VTL operations, including planning, examining, inspecting, stacking, transporting, hoisting, landing, securing and dividing containers handled in VTL units, should be appropriately trained.'' They require that ''the extent and content of such training should be guided by the physical characteristics of the terminal and the containers to be handled, the container movement flow, the equipment to be used for lifting and transporting the containers and the experience of the personnel involved.'' Many rulemaking participants supported the ICHCA guidelines and recommended that OSHA's standard be consistent with them (Exs. 43–6, 43–7, 50–10–2, 50–10–3; Tr. 1–239).

In the notice of proposed rulemaking, OSHA solicited comments on training—taking into consideration international standards and current domestic practices—that may be necessary for safe and efficient VTL operations. Rulemaking participants largely supported mandatory training for selected trades or positions affected by VTL operations (Exs. 43–7, 43–10, 44–1, 54–16). In fact, most rulemaking participants addressing the training issue reflected the need to train *all* persons involved in VTL operations (Exs. 43–10, 44–1, 54–16).

''The ILA deems it essential for its members and others in ILA ports to be trained in the techniques, risks and safety measures involved in VTL lifts and in assembling/disassembling VTL-connected containers,'' Herzl S. Eisenstadt stated (Ex. 44–1). ''This must include simulated training in handling emergencies caused by near-misses, sudden disengagements, etc., which are not identical for those occurring while handling single-lift containers,'' he elaborated.

Christine S. Hwang, appearing on behalf of the ILWU, agreed with the majority view that specialized training needs to be conducted for all job classifications, urging that ''specialized training on VTL operations be mandatory for all port workers in all classifications, including the casual labor pool'' (Ex. 43–10). Ms. Hwang went on to say that ''port-wide training should be required irrespective of whether a terminal employer in any given port chooses to perform VTLs in light of the fact that workers may travel to ports where they are required to perform VTL container operations.''

Taking into consideration these comments from rulemaking participants, OSHA agrees with the mainstream recommendation that some VTL-specific training is not only appropriate—but indeed necessary—for operation and employee safety in all U.S. marine terminals where VTLs are performed. However, the Agency believes that the depth of this training should be determined by employers based on individualized terminal criteria, rather than on a defined directive that inhibits customization. Therefore, OSHA has included a performance-based requirement for the employer to provide training for each employee involved in VTL operations. This provision requires the training to be commensurate with the employee's duties.

Beyond the consensus on widespread training, rulemaking participants voiced their opinion on further training specifics, such as to whom VTL operation training should apply and how extensive that training should be. Broad areas of discussion included training for preparation and performance, inspection and container integrity, ground movement, and work zone safety. The following sections summarize comments relevant to those topics.

1. Preparation and Performance

One example of possible procedural differences in performing VTLs is the operation of cranes to hoist the stacked and connected containers. Historically, VTLs have been performed by crane operators without off-site training specific to VTLs. Some rulemaking participants expressed the view that crane operator training is considered a crucial component to safe VTLs (Ex. 43–10).

Commenting on behalf of the ILWU, Hwang concurred as follows, ''Supplementary training (other than on the job) on special VTL handling should also be mandatory for crane operators.'' If a rule is adopted, ''ILWU strongly urges that various terminals' plans be standardized * * * and that crane operators be provided with additional training on how to read them,'' she continued (Ex. 43–10).

Mr. Joseph Curto, representing Maher Terminals, stated that VTL handling is one component of Maher Terminals' general training program (Tr. 2–117). Ron Hewitt of APM Terminals testified that his company also provided training in VTL procedures (Ex. 61; Tr. 2–208—2–210). He also recommended terminal-specific indoctrination (Tr. 2–208—2–209).

The ILA considered training in VTL procedures to be essential, as follows:

> In this regard, the ILA deems it essential for its members and others in ILA ports to be trained in the techniques, risks and safety measures involved in VTL lifts and in assembling/disassembling VTL-connected containers. This must include simulated

[25] OSHA's analysis assumes a uniform weight distribution. If the weight of the container and its contents are not uniform, more of the force could be concentrated on one of the two corner casting-interbox connector assemblies, perhaps overloading it.

[26] Since OSHA's strength analysis is based on the capability of the corner casting-to-interbox connector-to-corner casting assembly between the containers, the weight of the bottom container determines whether the VTL is safe to lift. By this analysis, the bottom container would be limited to a maximum of 98 kN, and the employer would have to measure the weight of the bottom container by itself to ensure that the VTL was safe to lift.

training in handling emergencies caused by near-misses, sudden disengagements, etc., which are not identical for those occurring while handling single-lift containers. [Ex. 44–1]

2. Inspection and Container Integrity

Another aspect rulemaking participants considered was the twistlocks themselves (Exs. 43–7, 54–30–2). The condition and proper operation of interbox connectors are more important for safe VTL operations than for connecting containers for transport aboard ship.

For example, APM Terminals' training program covers the examination of interbox connectors (Ex. 61; Tr. 2–153—2–154).

Though not thoroughly supportive of a specific OSHA requirement for training every worker involved in VTLs, Mr. Ronald Signorino, president of The Blueoceana Company, Inc., stated that training specific to interbox connectors would be advisable (Ex. 43–7). Mr. Signorino advised that mandatory training for personnel carrying out inspection-program-related functions was vital especially since he supported a continuous inspection program rather than an annual one. ''In that manner, all such liftlocks would be subject to more than just an annual examination and an occasional perfunctory perusal,'' he stated.

Mr. Le Monnier of ILWU Canada also provided testimony about the scope of inspections he thought OSHA should require, stating: ''A true inspection would require the dismantling of the SATL in order to view the internal components. Then, the SATL would need to be properly reassembled. Both the inspection and reassembly would require training procedures'' (Ex. 54–30–2).

The ILWU emphasized the point that adequate inspection of containers would also require training (Ex. 43–10–3). ''Only the obvious wrecks are likely to be identified by the average longshore worker, whose business it is to move the container, not subject it to rigorous inspection. Adequate inspection requires training, technology and ample time to accomplish such an inspection,'' the ILWU representative explained.

3. Ground Movement

The ICHCA guidelines (Ex. 41) specifically address concern for training of drivers of vehicles used to transport VTL units. The language dictates that:

training of drivers of vehicles etc. used to transport VTL units should be based on the organization's safe operating procedures. These should place particular emphasis on the speeds at which the vehicles enter turns, in order to avoid overturns and other accidents. Assessing the effect of wind speed on equipment stability and imposing a maximum wind speed above which the movement of VTL units will not take place. This speed should not be more than 15 m/s (55 kph, 34 mph or 30 knots). [Ex. 41]

The guidelines take a direct approach by stating in paragraph 7.6, ''all persons expected to be involved in VTL operations should be suitably trained.''

4. Safe Work Zone

Again, the ILWU was among the strongest supporters of widespread training to ensure a safe work zone for those directly and indirectly involved in VTLs (Ex. 43–10). Specifically, Ms. Hwang suggested that training topics should include, but not be limited to, ''safe handling of VTLs, emergency handling, cone and SATL inspection and maintenance, operation of all vehicles used to transport VTLs and particular concerns unique to transporting VTLs, methods of verifying weights of containers and reading vessel stowage plans.''

As stated earlier, most rulemaking participants addressing the training issue were firmly supportive of a practice that requires workers performing or supporting the performance of VTL operations to receive training applicable to their assigned duty. The opponents of the VTL process suggested a wide, scattergun-type of training requirement, presumably meant to train *every* worker (in any marine terminal or longshore work category) regarding VTL aspects. (See Ex. 54–2.) OSHA considers such an approach to be ineffective and inefficient.

While an industry or port-wide approach to VTL training may be an option, it would be overly burdensome as an OSHA requirement. In its VTL Guidelines, the ICHCA Safety Panel formulated a training matrix that could serve to fill the gap between training for essential personnel and more widespread informational practices. In fact, Mr. Signorino, testifying on behalf of USMX, recommended that OSHA use the matrix (found in exhibit 41, Appendix 5) as a practical and useful guide (Exhibit 54–2).

OSHA is adopting a performance-based requirement for VTL training but has decided not to specify the exact scope, scale, and details of that training. OSHA will allow employers to determine how to best satisfy these requirements for safe VTL operations in their specific workplaces. The Agency strongly recommends, however, that employers examine the ICHCA recommendations (found on the aforementioned matrix; Ex. 41) as a foundation for training parameters. Based on criteria unique to each terminal and employee, employers should supplement the ICHCA guidelines as necessary to protect employees. Employers are cautioned to consider the need for specific training in the areas discussed above, as OSHA will judge compliance based on employee knowledge and skill at performing the job safely.

C. Crane Type

Within OSHA's final rule on VTL practices in Longshoring and Marine Terminals, the type of crane that can be used to perform VTLs is addressed in § 1917.71(i)(4). The Agency's final rule requires VTLs to be performed by shore-based container gantry cranes or other types of cranes that have similar characteristics as described in more detail in this section of the preamble.

In the proposed rule, the Agency limited the practice of VTLs in the Marine Terminals Standard [27] exclusively to container gantry cranes based on three premises:

1. The container gantry crane is the only type of crane specifically designed to handle intermodal containers;

2. The container gantry crane is the only crane that has the precision control needed for such lifts;

3. The container gantry crane is the only crane capable of handling the greater load volume and wind sail potentials.

(68 FR 54303)

However, because many rulemaking participants (Exs. 43–1, 43–11, 47–5, 50–10–1, 54–4, 54–5, 54–14) voiced significant opposition to a requirement specifying the type of crane that may perform VTLs, OSHA has amended the language in the final rule to permit other types of cranes meeting the aforementioned mandatory criteria. The final rule takes into consideration comments, testimony, and evidence submitted by the participants, including Liebherr-Werk Nenzing Crane Company, which offered evidence about the cranes the company manufactures that have the capability to handle VTLs (Ex. 54–15; Tr. 1–314).

The most extensive comments came from Mr. Ronald Signorino, testifying for USMX (Ex. 50–10–1), who disagreed with the Agency's position, reasoning that ''[its] sense is that OSHA has imposed a totally unnecessary restriction in that the proposed rule would limit VTL operations to those in which a container gantry cranes is

[27] OSHA did not propose a corresponding requirement for the Longshoring Standard.

present, [when] other lifting appliances may, in fact, provide the same attributes that, in their sum, lend themselves to a safe VTL operation.'' Mr. Signorino testified at length about other types of cranes that had the necessary capability for VTLs and submitted documentation to the record showing the capabilities and certifications of these cranes (Exs. 54–4, 54–14; Tr. 1–280—290). The following discussion summarizes Mr. Signorino's further comments, as well as those from other rulemaking participants, and explains the Agency's final determination on the issue.

1. Design

In the rulemaking process, crane manufacturers, terminal operators, shipping concerns, and other companies maintained that the container gantry crane was not the only crane that was specifically designed to handle intermodal freight containers or that had the necessary precision for VTLs (Exs. 43–1, 43–11, 50–10–1, 54–14, 54–5). USMX (Ex. 47–5) argued that ''there are other types of cranes * * * that perform in a manner similar to shoreside container gantry cranes and provide equivalent handling stability and safety.'' The association explained that ''other types of marine cargo handling equipment, such as reach stackers and straddle carriers, can [also] be utilized to conduct VTLs.''

These participants argued that cranes of different designs were capable of performing VTLs. Commenting on behalf of Tropical Shipping and Birdsall, Inc., Mr. Signorino (Ex. 54–14) used the Gottwald HMK 260 E as an example, stating, ''lateral stability is accomplished through the means of solid state electronic drives and an operator controlled, precision rotator ring.'' Mr. Signorino also cited the Manitowoc 4100 W (Series 2), stating ''[With this crane], such lateral stability is accomplished through a system of automatic lanyards that are attached to outriggers on either side of the box spreader. * * * In this system, undesired lateral movement is automatically compensated for in a unique take-up system of lanyards, which ensures lateral stability throughout the entire range of motion from ship to shore and vice-versa.''

Representing USMX, Mr. Signorino (Ex. 50–10–1) further stated

> Some, such as rubber tired gantry cranes, straddle carriers, and certain other high capacity industrial trucks, can in fact perform all hoist and (when applicable) gantry and trolley functions in an extremely stable vertical and horizontal plane. Others, such as purpose-designed container handling harbor cranes, are fitted with highly precise mechanical and hydraulic stabilizing equipment, which ensures the lateral and rotational stability so necessary to safely conduct VTL operations
>
> * * * * *
>
> I know the agency did not intend to be that restrictive, and I believe that language can be crafted to accommodate all container handling devices that can safely qualify for use in VTL operations. The goal, here, is to be cautious and deliberate not only in terms of safe working load design capacities, but also in lateral and rotational stability abilities, as well. [Ex. 50–10–1]

2. Control

Also important is the degree of precision with which a crane may be controlled. Mr. Signorino explained that:

> precision control of any crane engaged in the handling of intermodal containers is a very relative matter. * * * [S]ome cranes offer a more precise means and a more precise sense to operators. The better, more experienced operators tend to make more effective use of such attributes. * * * [T]he load is moved (whether in a hoist or lowering exercise) in a relatively straight, level plane. [Ex. 54–14, emphasis included in original document.]

He also elaborated on how the Gottwald's ''[j]oystick controls permit the operator to correct any unwanted lateral movement by a simple, incremental activation of the rotator.'' Mr. Signorino noted that container gantry cranes have sufficient precision to perform VTLs: ''[they] can offer that control, in part, by moving the load on a set, level track (or trolley).''

3. Capability

Finally, commenters discussed the overall capability of different cranes. Mr. Signorino (Ex. 50–10–1) advised: ''The real concern that OSHA should rightly consider is not a limitation in terms of actual lifting appliances, but rather, how to ensure the stability of the load (mass) notwithstanding the lifting appliance being used. * * * [T]he remaining concerns all center upon lateral and rotational stability of the mass.'' Mr. Signorino continued to explain that even though container gantry cranes have a proven track record, there are other cranes with the capability to safely perform VTLs. ''Container gantry cranes achieve * * * stability (when operated correctly) by their design characteristics, i.e., gantry, trolley, hoist functions, each moving in a relatively straight plane.''

4. Other Concerns

There were no specific comments from rulemaking participants calling for the exclusive use of shore-based container gantry cranes. In the same vein, there was no opposition to the container gantry crane being the preferred delivery method for VTLs. Rulemaking participants objected to the exclusivity and limitation to shore-based gantry cranes in the proposed rule on the grounds that it would hinder efficient operations (Exs. 43–1, 43–11, 47–5, 50–10–1, 54–4, 54–5, 54–14).

Beyond this general consensus on the proposed rule, there was some concern on other aspects of crane operation including aging infrastructure and load stability. As offered by Virginia International Terminals, Inc., represented by Anthony Simkus, Assistant Director of Engineering and Maintenance, and Charles Thompson, Safety Officer (Ex. 54–16), ''by factoring in age and condition, most older cranes probably could not stop an overload when the brake is applied at other than near zero speed. This may even be true of newer cranes whose brake designs have not been dynamically tested at the factory under rated conditions.''

Though in the context of testimony in overall opposition to the proposed rule on a variety of points, the USMX (Ex. 47–5) similarly agreed with infrastructure considerations, stating, ''VTL regulations must be written to accommodate future enhancements in current equipment as well as new equipment designs and technology.''

OSHA agrees with USMX's position that there are other types of cranes that perform in a manner similar to shoreside container gantry cranes and provide adequate handling stability and safety. The Agency has concluded that the criteria noted in Mr. Signorino's comments accurately describe the characteristics of cranes that can safely handle containers in VTL operations. Therefore, the language in the final rule will broaden the parameters contained in the proposed rule, stipulating the preference for shore-based container cranes, but allowing other types of cranes that (1) are verified to be designed to handle intermodal containers, (2) have the precision control needed for VTLs, and (3) are capable of handling the greater load volume and wind sail potentials associated with VTLs.[28] While this language allows for more discretion by employers, the Agency will judge compliance on the design, capability, and precision parameters, and it expects employers to evaluate cranes performing VTLs using these same criteria.

[28] As noted later in this section of the preamble, ship's cranes, because they are not shore-based, must meet the alternative criteria listed in final § 1917.71(i)(4).

D. Platform Containers

Proposed paragraph § 1917.71(f)(3)(iv) addressed platform containers, or ''flat racks,'' stating:

> No platform container with its end frames erect may be lifted as part of a VTL unit. Empty platform containers with their end frames folded may be lifted in a VTL unit in accordance with the applicable regulations of this part. If the interbox connectors are an integral part of the platform container and are designed to lift other empty platform containers, they may be interlocked and lifted in accordance with the manufacturer's recommendations.

Platform containers are open on the wider sides and top, but have panels on the narrow sides, or ends. The end panels are either fixed in an upright position or folded flat with the floor of the container, depending on the design of the flat rack. The proposal would not have permitted flat racks to be used in VTLs if the end panels were in the upright position. The lack of sides and top lessen the strength and stability of the container, making it a possible safety hazard to lift them in tandem. However, if empty platform containers had the ends folded down and built-in connectors that were designed for the purpose of simultaneously lifting multiple units, the proposal would have permitted the flat racks to be handled in accordance with manufacturers' recommendations. Also in the proposed rule, two flat rack containers with the ends folded down could be handled as a VTL if they were connected by interbox connectors that were not built-in.

In a letter dated October 31, 2003, the ILWU contacted OSHA with flat rack concerns. Larry Hansen, ILWU Local 19 Union (Ex. 48), wrote to the Seattle OSHA field office:

> We have a problem in Seattle of lifting empty flat rack containers bundled four or five at a time for both inbound and outbound loads. In some cases, the hoisting fits within the Gurnham letter where twist locks are being used to fasten one container to another. In other cases, the containers are fastened by internal mechanisms securing one container to another, which is outside the Gurnham provisions.
>
> In dealing with the Gurnham provisions, the employers are not inspecting the containers for visible defects prior to hoisting, ensuring that damaged containers will not be hoisted in tandem as stated in Item 1 of his letter. Nor are we receiving documents from the manufacturer which verifies the capacities of the twist locks and corner castings, as stated in Item 7.

The Agency responded (Ex. 48–1) with the following comments:

> Although the Gurnham letter does not specifically mention VTL lifts of [flat rack] containers, OSHA concluded that the provisions listed in the letter also apply to VTL lifts of two empty [flat rack] containers with their end frames folded and connected by semi-automatic twist locks.

Though the Agency received few comments on this issue during the rulemaking process, the ILWU was present to voice some further concerns regarding the lifting of flat racks vertically in tandem (Ex 43–10). Overall, the ILWU opposed the lifting of multiply stacked platform containers with end panels in the upright position; but the ILWU also strongly opposed the complete discretion afforded to users and manufacturers of platform containers with end panels folded down. The ILWU argued: ''There is no record or analysis regarding new or already existing connectors' strength, durability and/or capacity or of the corner castings of [flat racks].'' The union suggested that ''[t]he hoisting of multiply-stacked [flat racks] be prohibited in light of the absence of evidence demonstrating that this type of lift can be performed safely.'' The ILWU also argued that flat rack VTLs ''pose even greater problems [than container VTLs] due to the inferior quality of the corner castings.'' An ILWU representative (Ex. 43–10) explained that ''corner castings on [flat racks] are made from thinner metal and have larger openings through which SATLs and interbox connectors are even more likely to fall through, irrespective of whether they are adequately locked.'' The representative went on to say that flat racks ''endure even greater damage through wear and tear due to the fact that they are used to carry bulk cargo, which is often made of steel and hard materials.''

During the rulemaking period, the ILWU went on to cite numerous incidents when flat racks have proved hazardous (Ex. 43–10; Tr. 2–369–2–370, 2–419–2–420). According to the ILWU (Ex. 43–10), ''on November 14, 1997 in Tacoma, Washington, four stacks of [flat racks] were [bundled] together and connected by the cones that are built into the [flat racks] and by Evergreen SATLs. The [flat racks] were also banded together. When the bundle of [flat racks] was hoisted, the bands broke, the cones failed and the bottom [flat racks] fell approximately sixty to seventy feet.'' Mr. Ross Furoyama, an ILWU representative (Tr. 2–419–2–420), pointed out that among the unspecified number of incidents he had witnessed involving flat racks failing, there was one when the bands around three stacked flat racks secured with 2-inch bands and specialized nonstandard twist locks still broke. Following this incident, the company instituted a ''prechecking'' policy. Employees were then required to prelift the stacked flat rack bundles before hoisting them, to make sure they were properly connected. After implementing the precheck procedure, the bands continued to break, so the company started using chains to secure the bundles. Mr. Furoyama remained dubious about the safety of the procedure.

Other rulemaking participants supported allowing platform containers to be lifted in VTLs (Exs. 10–2, 52–3; Tr. 1–57). Mr. Michael Arrow of USMX supported lifting flat racks in VTLs, stressing that ''ISO Standard 1496.5, Section 7.3, clearly indicates that [flat racks] not only may be lifted in a stacked pile, but are specifically designed and tested to be able to do so'' (Tr. 1–57).

Another proponent of flat racks, Domino Flatracks, attempted to support its views with data on existing platform containers (Ex. 52–3). Domino Flatracks stated that ''there are 80,000 Domino [flat racks] in service and several thousand platforms using these twist locks, some of which have been in service for more than 24 years.'' Domino's representative went on to say that ''the assembly successfully held the design loads of both 15 and 30 tons and is thus concluded to satisfy the customer requirements.'' Nevertheless, the company was also quick to point out that assembly failure did occur at 38 tons (Ex. 52–3). As noted earlier in this section of the preamble, the Agency has concluded that a safety factor of five is reasonably necessary to ensure the safety of VTLs, and OSHA considers the margin of safety noted in the Domino Flatrack comments to be insufficient.

After carefully considering all the materials in the record on flat racks, OSHA has determined that flat rack corner castings and connectors are inferior to corner castings on standard containers and interbox connectors required for use in VTLs in the final rule. The Agency has therefore concluded that flat racks should not be considered appropriate elements of safe VTLs in marine terminals. The anecdotal evidence of flat rack VTL failures indicates that lifting bundles of flat racks connected solely by interbox connectors is unsafe. The comments of Domino Flatracks, a platform container manufacturer, suggests a simple explanation of why these failures have occurred: these devices simply do not offer a sufficient factor of safety to ensure a safe VTL. Further, the evidence that the corner castings and interbox connectors do not match the

standardized types used in ISO Series 1 containers indicates that OSHA strength analysis is not applicable to flat rack VTLs. Consequently, in the final rule, the Agency is banning the practice of lifting flat racks connected by built-in connectors or by separate interbox connectors. Employers may still lift multiple flat racks in bundles by following §§ 1917.13 and 1918.81 for unitized loads.

E. Coordinated Transportation

The safe transport of vertically connected containers in marine terminals was largely addressed in the proposed rule in paragraphs § 1917.71(i) and § 1917.71(j). These paragraphs address the communication, equipment, and operational parameters required for safe transportation practices during VTLs.

OSHA believes that these two provisions, as they were introduced in the proposed rule, could substantially reduce the risk of injuries related to VTLs, and therefore has carried them forward into the final rule largely unchanged as § 1917.71(j)(1) and (j)(2). The requirements expressly stipulate:

1. Equipment used to transport vertically connected containers must be either specifically designed for this application or evaluated by a qualified engineer and determined to be capable of operating safely in this mode of operation.

2. The employer must develop, implement and maintain a written plan for transporting vertically connected containers in a terminal. The written plan must establish safe operational parameters, such as optimal operating and turning speeds; as well as address any other conditions in the terminal that could affect the safety of the movement of vertically coupled containers.

A safe, organized transport plan also involves communication and coordination among all affected employees. To coordinate transportation efforts in Marine Terminals, proposed paragraph § 1917.71(b)(9) would have required that a copy of the vessel cargo stowage plan be given to the crane operator and that the vessel cargo stowage plan be used to identify the location and characteristics (that is, weight and content) of any containers being used in a VTL.

As explained in detail later in this section of the preamble, the Agency has decided that existing requirements in § 1917.71(b)(1) and (b)(2)(ii), which mandate that the gross weight of containers be marked or a stowage plan be available, are not sufficient for safe VTL operations; therefore, the final rule does not carry forward proposed paragraph (b)(9). As the final rule only permits VTLs with empty containers—and requires employers to verify that each container in a VTL is empty before it is lifted—OSHA has concluded that requiring the stowage plan to be provided to the crane operator and for the plan to be used to identify containers lifted in VTLs is redundant, and therefore unnecessary.

The following is a summary of the rulemaking comments that prompted OSHA to arrive at the final rule's provisions related to transport safety.

1. Equipment

Paragraph (i) of proposed § 1917.71 would have prohibited the movement of VTLs on flatbed trucks, chassis, bomb carts, or similar types of equipment, unless the equipment was specifically designed to handle VTLs or evaluated by a qualified person (defined in proposed § 1917.71(i) as ''one with a recognized degree or professional certificate and extensive knowledge and experience in the transportation of vertically connected containers; also one who is capable of design, analysis, evaluation and specifications in that subject'') and determined to be safe in this mode of operation.

This section of the proposed rule met with support, as there was general apprehension among rulemaking participants (Tr. 2–27) about moving tandem stacked containers around the terminal using unmodified chassis and bomb carts, due to a greater chance of vehicle tipover because of a higher center of gravity. Transporting two containers on such equipment can raise the center of gravity higher than the equipment was designed for, increasing the possibility of the vehicle tipping over (Ex. 41).

Rulemaking participants discussed a study that was conducted at the request of the ICHCA VTL workgroup, *Vertical Tandem Lifting of Freight Containers*, which evaluated the safe turning radius and speed at which VTLs may be moved in a terminal (Ex. 41). The study provided chassis stability calculations for determining the speed at which a fifth wheel and chassis carrying vertically coupled containers would tip over while making a turn.

Alternative examples, offered by Mr. Ronald Signorino of the Blueoceana Company, Inc. (Tr. 1–160), could also reduce the risk of vehicle tipovers to a safe level. Mr. Signorino stated that straddle-carriers, top-loaders, MAFIs, low-beds, and bomb carts are used to move containers around the terminal; but that personnel typically move vertically connected containers only a very short distance away from the crane and break them down using terminal industrial trucks.

Rulemaking participants also offered comments that were not specific to vehicles, rather more supportive of other equipment requirements as part of an overall safety program. ''[W]e have experienced tipover in Hawaii,'' said ILWU member Mr. Ross Furoyama (Tr. 1–211). ''[W]e did transport tandems on chassis and we did flip over.'' Though Mr. Furoyama did not offer a specific solution (except to ban VTLs altogether), some rulemaking participants argued that speedometers on transport equipment could further prevent tipovers and other accidents. For example, Daniel Miranda of the ILWU (2–339) testified that safety essentials, like speedometers, should be in place when transporting containers around the terminal because of the potential for accidents. ''Currently on the west coast, our employers have refused to provide [utility tractors], hustlers, with speedometers, a device that is so basic in controlling speeds within the terminals for the movement and transport of these VTLs,'' he explained (Tr. 2–339). ''Without this basic device and other necessary controls, the safe movement of VTLs within a main terminal is not possible. * * * Those controls must be mandated first before we even take it off the ship, on or off,'' he continued.

The lack of speedometers was important, Mr. Miranda (Tr. 2–358) testified, because accidents that have occurred could be attributed to excessive speed. These incidents prompted Mr. Miranda to stress that a transport plan should be developed because of the speeds in the yard (Tr. 2–358).

The Agency has concluded that it is not necessary to require speedometers in the final rule. Though OSHA agrees that speedometers can be useful for equipment operators, it does not consider them the only precautionary measure to be taken during ground transportation. For instance, as Mr. Signorino pointed out, vertically connected containers are typically moved very short distances away, and there are other vehicles—vehicles that may not be equipped with speedometers—capable of performing the transport (Tr. 1–174). In terminals such as those Mr. Signorino referred to, speed would not be a prime safety factor to prevent potential accidents. The Agency considers speed to be of lesser consequence if transporting the vertically coupled containers does not require turns or involve uneven ground surfaces. However, as noted later in this section of the preamble, OSHA does not

believe it to be appropriate to impose speed limits in an employer's transportation plan for vehicles that do not have speedometers. For these vehicles, the transport plan must include other measures to ensure the safe movement of vertically coupled containers.

2. Operational Parameters—Transport Plan

Operations before, during, and after VTLs all create an environment with potential for injury. Proposed paragraph (j) of § 1917.71 would have required that a written transport plan be developed and implemented to include safe operating speeds, safe turning speeds, and any conditions unique to the terminal that have the potential to affect VTL-related operations. In the notice of proposed rulemaking, OSHA asked for comment on what information should be in the terminal VTL handling plan and which safe practices would be necessary to ensure safe transport of stacked containers via ground transport.

Rulemaking participants supported the proposed requirement and gave reasons to develop a written plan for transporting containers around the terminal. Herzl Eisenstadt of the ILA (Ex. 47–3) described his concern saying: ''It is quite possible that even the ground-handling aspects have been susceptible to danger-laden incidents in preparing for and transporting VTL-lifted containers. In any and all events, the terminal plan must provide for carefully laid-out coordination of ground and lift operations that emphasize *safety first* for all terminal personnel in the vicinity of VTL operations.'' (Emphasis included in original.)

The support for a written transport plan notwithstanding, participants did ask OSHA to remain cognizant of the unique characteristics within each terminal as it moves forward with the VTL standard. Mr. Michael Bohlman of Horizon Lines (Tr. 1–196–1–197) testified that though turning radius, weight distribution, and speed studies have been conducted, each terminal needs to be looked at within its individual context before any safety requirements are set for that terminal. James M. McDonald, Vice President for Accident Prevention of the Pacific Maritime Association and Secretary to the Board of the Directors of the National Maritime Safety Association, subscribed to the same logic and called for rational and nonrestrictive regulations that will safely cover transport of VTLs in general. Mr. McDonald believed that ''[t]he rules as written now basically outline that [employers] have to provide for safe movement of the containers on the terminal'' and that everybody needs to have a plan with respect to VTLs, so that everybody will know their roles and be trained for their roles, and VTLs can be done with the utmost safety (Tr. 2–159).

As stated earlier in this section, OSHA has decided not to change the provisions proposed in paragraphs (i) and (j) substantively in the final rule; however, the Agency reminds employers that they must consider all aspects of transporting vertically coupled containers that affect safety, including the relevant factors discussed in this rulemaking.

For instance, the ILWU and some other rulemaking participants (Exs. 43–10, 44–1, 47–3) recommended that the Agency supplement its proposed rule with some of those rules implemented by Section 8.1.12 of ICHCA's *Vertical Tandem Lifting of Freight Containers* and Section 16 of the *Pacific Coast Maritime Safety Code* (PCMSC). These documents contain mandates for transporting vertically coupled containers, such as requiring workers to wear protective gear (high visibility vests) and prohibiting truck drivers from cutting across designated driving lanes. The ILWU argued that ''movement of VTLs throughout the terminal will be equally, if not more precarious than [VTL hoisting],'' and urged OSHA to consider supplementing the proposed rule to require additional terms (Ex. 43–10).

The union maintained that standardized transport plans for all ports were preferable, but it also recommended a minimum of the following provisions: regulated safe surface road conditions; additional safety manning for VTLs throughout the terminal; posted speed limits and stop signs for VTLs; speedometers, wind alarms and LIDs for every vehicle used for moving VTLs; and additional and designated special safety lanes for vehicles transporting VTLs (Ex. 43–10).

Though OSHA feels these suggestions could assist employers in establishing individualized transport procedures that would enhance port safety with specialized considerations, the Agency has decided not to adopt the ICHCA or FCMSC provisions. OSHA considers the provisions to be inappropriate for some workplaces and thus to be too restrictive. The final rule, instead, requires employers to tailor their transport plans based on performance and conditions specific to their workplaces. For example, if transporting vehicles are equipped with speedometers, speed limits could be set. On the other hand, if speedometers are not present, employers must take other measures to ensure stability—such as prohibiting turns or otherwise ensuring that tipovers are not possible. Similarly, if roadway conditions present uneven areas or large potholes, the employer must set slower speeds than would otherwise be possible on uniformly level surfaces.

3. Operational Plan—Communication and Coordination

As stated earlier in this section of the preamble, proposed § 1917.71(b)(9) would also have required additional safe operational parameters involving communication and coordination within the terminal and among terminal employees. This provision was taken directly from section 8.1.1.1 of the ICHCA guidelines.

The ILA, ILWU, Virginia International Terminals, NMSA, PMA, and the ICHCA guidelines stated that the potential hazards of VTL operations require close cooperation between all parties involved in the operations, including terminal operators, shipping companies, workers' representatives, and competent authorities, to ensure the development of safe procedures for the operations (Exs. 41, 43–10, 44–1; Tr. 2–24, 2–116—2–117). They also stated that such cooperation is necessary not only within container terminals but also between ships and their originating and destination terminals.

OSHA agrees with these commenters and has concluded that safe transport operations require communication and coordination among transport teams, crane operators, and other key terminal staff. If the lines of communication are not open to all involved parties, safe VTL operations can be jeopardized. The testimony and public comment the Agency received during the rulemaking process revealed that communication during VTL operations is very important. So important, in fact, that some participants felt the lack of communication could possibly be the ''weak link in the chain'' regarding the success of safely conducting VTLs (Tr. 2–61).

Many rulemaking participants provided ideas as to how to communicate to everyone that VTLs are going to be done on a particular day. Communication within the terminal about VTLs before they are conducted has aided some companies in ensuring a smooth series of VTLs. One such situation is at APM Terminals. Ron Hewett, APM's Director of Safety and Training, shared how this preparation has benefited them. He explained:

A pre-shift conference with APM Terminal supervisors and International Longshoreman's Association members provides an overview of VTL operations. This provides an opportunity for all personnel to fully understand the planned operation. communications, personnel involved, equipment to be used, procedures, and basic safety concerns are discussed. [Ex. 50–13]

Mr. Thompson, representing Virginia International Terminals, pointed out that ''the people factor is a concern,'' particularly if a terminal does not do a lot of VTLs (Tr. 2–61). ''If we consistently handle one container at a time, we have a safety margin. Those terminals [that] handle two and three consistently all the time are used to it, and have the precautions in place,'' Mr. Thompson said. ''Terminals of our size, and I believe there are some others on the east coast, but I can't speak for them, see it as a possible intermittent, and that intermittent action is probably going to be a source of miscommunications, injuries, and accidents'' (Tr. 2–20).

Examples of different procedures offered by participants to ensure adequate communication during VTL operations included:

- ''The vessel superintendent is the one that calls out standby for the vertical tandem lifts'' (Tr. 2–217).
- ''Prior to commencement of work on each hatch, trained crane operators are given direction on which containers and bays will be handled in [VTL] fashion'' (Ex. 50–13).
- ''[M]ostly in vertical tandem lifts, the crane operator knows that they cannot just go down and lower it full speed, and that is just the basic part. They count on the signalman, who coordinates this to give them the proper signals to prevent this from happening'' (Tr. 2–123—2–124).
- ''[B]efore the crane operator lifts, whether it is a semi-automatic, or a fully automatic, there is a process, something has to be done. Semi-automatic has to be unlocked, and fully automated, somebody is working on the deck to maybe do some latching rods, or some other cargo securing. Somebody will signal to him that it is okay now to start taking containers off'' (Tr. 2–192).
- PCMSC, 2002. Rule 1613—''Top/Side Handlers and Reach Stackers working together against that vessel shall also be assigned a separate radio channel from those assigned to the working cranes'' (Ex. 43–10–11).
- ''Foremen and supervisors coordinate with lashers and ground-men the identification and placement of Allset C5AM–DF Liftlocks in corner castings. This process ensures that all locks operate in the same manner and are placed correctly in corner castings'' (Ex. 50–13).

As mentioned earlier in this section, communication can present a weak link in an overall safe and coordinated VTL transport plan. OSHA agrees that the commenters' suggestions listed above can be useful tools for employers to use in developing their own tailored transport plans.

4. Operational Parameters—VTL Picking (Organization)

Preplanned and organized picking of VTLs minimizes much guesswork for workers in the terminal and on ship. In the proposed rule, OSHA aimed to minimize injuries by requiring, through the written plan, prearranged movement of VTLs.

The recommendations in PCMSC–2002 demonstrate that preparation at the terminal before a VTL and planning the movement of VTLs can significantly enhance safety (Ex. 43–10–11). ''Prior to commencement of work on each hatch, trained crane operators are given direction on which containers and bays will be handled in [VTL] fashion,'' said Mr. Ron Hewett (Ex. 50–13), providing an example of this type of preparation.

From OSHA's point of view, many of those involved with VTLs have used an organized approach to loading or unloading VTLs. This allows all employees to be on the same page and any safety precautions that need to take place are communicated to all working in the area. ''[Y]ou have a pretty good idea when you get the [stowage] plan from the port of departure and you know how the ship is configured, then you can plan the number of vertical tandem lifts you do when it hits the United States,'' said Maersk Captain Bill Williams (Tr. 2–127). Ron Hewett, representing APM Terminals, noted that ''the actual sequence and the team coordination will vary from gang to gang and terminal to terminal, but it is available to the crane operator'' (Tr. 2–216).

Planning ahead for VTLs aids in efficiency as well. As Captain Williams described, ''I think that * * * every terminal is unique in the way they operate and perform, and the way they're configured, and the ships that come in.'' Captain Williams explained that ''[t]he same ship may be different the next time it comes into the port, just based on the economic conditions.'' Captain Williams advised that advance notice is best, saying ''So there is really no hard and fast rule, except you have a pretty good idea when you get the plan from the port of departure and you know how the ship is configured, then you can plan the number of vertical tandem lifts you do when it hits the United States'' (Tr. 2–127—2–128).

Some participants felt that terminal uniqueness complicates a mandatory plan for the transportation of vertically coupled containers (Tr. 1–196—1–197, 2–158). The National Maritime Association's Mr. McDonald explained that ''each individual terminal operator working with their company policies and their terminals, which are all unique, have to build their VTL plans within the guidelines that OSHA will come out with'' (Tr. 2–158).

While OSHA agrees that each terminal's unique characteristics contribute to the complexity of developing plans, the Agency still feels a sound transport plan with all of the three discussed components—coordination and communication among all affected employees, appropriate equipment, and proper operational parameters—will help ensure the safety of terminal employees. Additionally, such a cohesive plan will ultimately enhance productivity. Therefore, OSHA has carried the proposed requirement for a transport plan forward into the final rule. Employers are advised to take all conditions unique to their terminals into consideration, while adhering to the requirements of final § 1917.71(j)(2).

F. Safe Work Zones

OSHA noted in its preamble to the proposal that employees working around VTLs are exposed to the risk of falling containers should the VTL fail (68 FR 54302). The current Marine Terminal and Longshoring standards recognize hazards inherent in working under suspended containers in existing §§ 1917.71(d)(2) and 1918.85(e), which prohibit employees from working beneath a suspended container. Evidence in the rulemaking record addressed the risks faced by employees working near VTL operations (Exs. 4, 10–5, 19, 43–5, 43–10–3; Tr. 1–319, 1–337—1–338, 1–374, 2–227—2–229, 2–359—2–361, 2–386).

Taking into consideration all participant comments, the Agency has decided to include language regarding safe work zones and landing and tipover footprints in its final rule. The final rule supplements the existing requirements that prohibit employees from standing under an elevated load by requiring, in § 1917.71(k)(1), employers to create a ''stand-clear zone'' from vertically connected containers in motion. OSHA is not requiring a designated place in each terminal where all employees are required to stand or a designated area where employees are prohibited while the connected containers are being

handled by a crane or ground handling equipment. The final rule thus allows employers flexibility in determining how best to comply with the safe work zone requirement during VTL operations in their workplaces.

During the rulemaking process, OSHA requested that participants relate information about incidents involving vertically coupled containers that had fallen. Rulemaking participants, such as ILWU member Mike Freese, testified about current practices that put employees at risk. Mr. Freese described one incident where two containers were being lifted in an area that was supposed to be cleared, but he said ''I clearly saw people standing around the bomb carts. I saw another bomb cart pull up while people were standing there in the area'' (Tr. 2–386).

In addition to comments on the primary concern of employee fatalities and injuries, the Agency heard testimony on near misses; as well as many suggestions on how to combat specific contributing risks during the movement of vertically connected containers, such as tipovers, helicoptering, and disengagement or failure of the interbox connectors to engage. These risks point to the need to address the safety of employees working near VTL operations to protect these employees in the event of failure or overturn of vertically connected containers. The following is a summary of comments and testimony from rulemaking participants that support the Agency's decision to include the safe work zone parameters in the final rule:

1. Tipovers

Whenever containers are stacked, there is increased potential for tipovers—both of the containers themselves and the crane performing the lift (for more information on cranes, see the discussion of the issue entitled ''Crane type,'' earlier in this section of the preamble). Though the containers are required to be empty, there is still the risk that the containers themselves could be top-heavy (for example, if the tare weight of the top container is greater than that of the bottom), increasing the risk of tipover incidents. Ron Hewett of APM Terminals summed up the issue in a single succinct sentence: ''The shadow cast by a vertical tandem lift tipover would be greater than a single container tipover'' (Tr. 2–228).

2. Disengagements

As noted previously in this section of the preamble, there was sufficient testimony to indicate that the failure of interbox connectors to engage—which could cause the containers to separate and drop—was of paramount concern. Several union members testified to situations where this had occurred and industry representatives acknowledged that such incidents had occurred, though they had not resulted in injury (Exs. 11–1B, 11–1P; Tr. 1–104, 1–106). Some participants, such as Mr. Matthew Lepore of the ILA, expressed concern for those in the vicinity of a VTL when the interbox connectors fail. He stated that: ''When you get to the dock, you're talking about separation or you're talking about moving this double, or triple * * * [Y]ou're going to have more people who have nothing to do with it, but are working in the area'' (Tr. 1–344). He further explained:

> You have superintendents, you have checkers, you have [employees designated to other areas, who have wandered over or are passing through], you have tractor drivers, [and] you have the person that's going to separate it if you're not going to use the crane. All of these [people] come into play. [Tr. 1–344—1–345]

Mr. Ross Furoyama, ILWU, talked about the additional danger to workers within a certain distance of VTLs. He stated that as VTLs are being brought from one place to another, there is a certain radius to the swing of the unit as it moves through the air and ''if there's any kind of separation, those [employees] are in a danger zone'' (Tr. 1–311).

Mr. Jerry Ylonen, also with the ILWU, added the perspective of a crane operator. ''I have to drive from that crane, underneath five other cranes working in a safe way, and then exit the forward end of the ship, come back, and then go into the yard,'' he said. ''So that footprint is what really we need to look at, you should consider, because that is where the most danger is to people'' (Tr. 2–361). Mr. Lepore supported Mr. Ylonen's concern about cranes, but offered a solution that has worked at Maersk Sea-Land:

> Our dock is a lot safer place now than it was [before the Maersk takeover of Sea-Land].
>
> The reason is this: When you have vertical tandem lifts, especially in a company like ours where we get 14 to 17 ships a week, and at the time we were getting in the area of 12 to 15 with Sea-Land, you had more than one gang on a ship.
>
> So if the center gang is doing mostly discharge, * * * you're going over people's heads, even if they're in another gang. If * * * the double-pick breaks loose, it's going to swing over in the area that's away from underneath the legs of the crane.
>
> All of the operation was performed underneath the legs of the crane when Sea-Land did it that way. We never did anything away from it, other than when we loaded. [Tr. 1–319—1–320]

The solution presented by Mr. Lepore, performing ground operations under the crane legs, not only improves safety of the VTL, but ensures that the operation satisfies the requirement in existing § 1917.71(d)(2), which requires employees to stay clear of the area beneath suspended containers.

3. Vicinity

Most rulemaking participants agreed that the employees most at risk during VTL operations are those in the immediate vicinity of the movement of vertically connected containers. Sea-Land representative Phillip Murray stated that although some parties ''have suggested the establishment of a 100[-foot] stand clear zone for multipick operations[,] these parties provide no basis for this assertion.'' He felt that existing stand clear zones have been adequate (Ex. 19).

In a broader discussion, some participants testified that they just do not allow anyone under a container during a VTL (Tr. 2–62), or they do not consider the containers to be at a point of rest until they are separated (Tr. 2–39). However, most participants suggested rough estimates of a safety zone if a container became accidentally separated. ILWU member Jerry Ylonen described the steps taken at his terminal saying, ''what happens now, I would say everybody gets at least 15 feet away, stands back out of the way 15 to 20 feet [for a single container]'' (Tr. 2–359—2–360). Brian McWilliams, President of the ILWU, submitted an excerpt from Rule 1513 of the Pacific Coast Marine Safety Code to the record, which reads:

> Employees shall not walk or work in the aisle adjacent to a container bay being loaded or discharged, except when the uppermost tier is being worked. Employees lashing or unlashing when the uppermost tier is being worked shall maintain a minimum athwartship distance of five (5) container widths or half the width of the tier, whichever is greater, offshore of the container being handled by the crane. [Ex. 4]

Other policies suggested or implemented included ''stand clear'' areas (Ex 10–5, Ex 43–5), a minimum 30.5-meter (100-foot) stand clear zone (Ex 43–10–3, p. 13), having employees stand in front or in back of the cranes (Tr. 2–227), clearing a section of deck or the dock (Tr. 2–388, 2–415), safety bulletins (Tr. 2–228—2–229), and employees standing in front of the bomb cart or chassis and in back of the plane (Tr. 2–115).

An idea offered by both Robert Anderson, Ph.D., P.E., on behalf of ILWU, and Ron Hewett of APM

Terminals, was to use a worst-case analysis (Ex 54–30–1; Tr. 2–228). They suggested that the largest area potentially affected by a tipover or release of twistlocks be examined first, and then work to keep employees away from that area. However, Mr. Hewett did say that he believed it would be wise if OSHA explored setting standards for the location of people on the ground during VTLs (Tr. 2–229).

In regard to establishing safe work zones, there was some specific disagreement about how to treat truck drivers. Rulemaking participants disagreed about whether the risk to truck drivers is inside or outside of the cab. Mr. Freese argued that his drivers are going to walk away to a spot they feel safe (Tr. 2–381). Anthony Simkus, Virginia International Terminals, agreed, saying that a truck driver would be in trouble if there was a separation and containers fell onto a chassis. (Tr. 2–64) Yet, Bill Williams, Maersk, argued that the practice of bomb cart drivers staying in the cab during VTL loading is absolutely safe and safer than being outside of the cab (Tr. 2–174).

4. Conclusion

Taking into consideration the record as a whole, the Agency has decided to regulate safe work zones and footprints in its final rule, believing that ultimately safe work zones will protect employees from being injured if a VTL does fail or vertically connected containers tip over. The final rule supplements the existing prohibitions against employees working under an elevated container, with a requirement for employers to create a safe work zone that will protect employees in case a container drops or overturns. The transport plan must include the safe work zone and procedures to ensure that employees are clear of this zone when vertically connected containers are in motion. OSHA believes that this provision is important to protect the safety of employees working near VTLs.

Viewpoints varied as to optimum dimensions of a safe work zone, the majority of rulemaking participants addressing this issue did agree that the employees most at risk during VTL operations are those in the immediate vicinity of the vertically connected containers. Most of these participants provided rough estimates of a safe work zone if a container became separated. For instance, according to Jerry Ylonen, the ILWU recommends that employees stand at least 4.6 to 6.1 meters (15 to 20 feet) from a single container, a distance that equals at least twice the height of a container. Brian McWilliams of the ILWU reiterated the PCMSC rules that recommend a five-container width or half the width of the tier—whichever is greater—as an acceptable safe work zone.

Vertically connected containers being transported over the ground present a tipover hazard (Tr. 2–228). VTLs being moved by crane present a disengagement hazard (Exs. 11–1B, 11–1P; Tr. 1–104, 1–106). A safe work zone must protect employees against both of those hazards. In a tipover, the vertically coupled containers would fall over, landing a distance from the bottom corner of at least the height of the VTL. Additionally, the momentum of the falling containers would carry them some distance beyond that. In a worst-case disengagement, the bottom container would pivot about one end before falling to the ground.[29] If the falling container tipped over lengthwise on landing, it would strike the ground a distance equal to the length of the container from the area immediately below the VTL.

OSHA has decided not to set minimum dimensions of the safe work zone because conditions vary from terminal to terminal. Vertically connected containers being transported by ground transport equipment pose an overturn hazard. The distance the containers will fall in a tipover will depend, upon other things, on turn radius and vehicle speed. VTLs moved by a container gantry crane will have little rotational momentum, and this will affect where the containers land if the containers become uncoupled.

Although OSHA will allow employers to use discretion in setting safe work zones, employers will need to consider where containers will land in the event of tipover or VTL failure and set the zones accordingly. Furthermore, even though the standard does not require a designated place for employee to stand in each terminal, employers will have to ensure that employees know where a safe retreat is available before the crane or other equipment moves vertically connected containers.

G. Reporting of VTL Accidents

In its proposal, OSHA requested information on whether the final rule should include a requirement for reporting VTL accidents and near misses. Such a requirement would have provided the Agency with additional information on which to base any future rulemaking on VTL operations.

The ILWU and the ILA recommended that the final rule include a provision requiring the reporting of accidents and near misses (Exs. 43–10, 44–1). The ILWU stated:

> The ILWU strongly urges OSHA to include regulations establishing a reporting mechanism for all VTL accidents, near-misses and any incident related to VTLs, including defects in the components comprising the VTL, e.g., the interbox connector and/or container(s) (''VTL accidents and incidents'') in the event OSHA's final rule-making sanctions VTLs. * * * Because this practice has gone on for so long virtually unregulated and unmonitored, whereby maritime industry employers have been allowed to circumvent even the minimal and inadequate requirements set out in the Gurnham Letter, the agency should establish a VTL-monitoring division to allow workers as well as employers to supply information with respect to any and all VTL accidents and incidents causing and/or potentially threatening harm to marine terminal and longshore workers. [Ex. 43–10]

The ILWU further stated that these reports should be submitted to Federal and State authorities, including the U.S. Coast Guard, and to employee representatives (Ex. 43–10). They further recommended that VTL operations cease until the accident or incident was investigated.

The ILA also urged OSHA to require all VTL-related incidents to be reported to the Agency on an as-occurring basis, but no less than quarterly (Ex. 44–1). They argued that an incident is no less an indication of an underlying problem than an accident involving reportable injuries. The ILA additionally urged the Agency to defer the final VTL standard until it implemented an effective VTL incident reporting system and collected additional data to determine the safety of VTLs compared to lifts of single containers.

In a joint comment, USMX, NMSA, and PMA opposed a requirement for accident and incident reporting (Ex. 47–5), stating:

> There is no need for a special reporting mechanism for VTL accidents and near misses. With regard to near misses, how would these instances be defined? We had considerable difficulty with the term ''near miss'' after the promulgation of the final rules on Powered Industrial Truck Operator Training. Instituting such a procedure without any evidence that VTLs pose an enhanced risk to workers over single lifts, is inappropriate and in excess of the agency's authority. [Ex. 47–5]

However, under questioning at the public hearing several industry representatives acknowledged that

[29] Because the final rule requires both containers in a VTL to be empty, the combined weight of the two containers will be well within the rating of the crane and disengagement of the top container from the spreader bar is extremely unlikely—certainly less likely than in a lift of a single container loaded to its maximum weight. As noted earlier, this can be 30 metric tons or more.

companies have internal reporting mechanisms for accidents and near misses (Tr. 1–192, 1–229, 2–224).

OSHA does not agree with these commenters that a reporting requirement would be in excess of the Agency's authority. The Occupational Safety and Health Act of 1970 (OSH Act) explicitly gives the Agency authority to promulgate regulations that require reports ''[f]or developing information regarding the causes and prevention of occupational accidents and illnesses'' (29 U.S.C. 657(c)(1)). Requiring employers to report accidents and near misses would certainly fall within this authority.

While OSHA agrees with the ILWU and the ILA that fatality, injury, and accident reporting is useful, the Agency has decided not to include a reporting requirement in its final VTL standard. The comments by the ILWU and ILA appear to support reporting mechanisms for three purposes. First, longshore workers should be able to report safety problems to OSHA. Second, reports of VTL incidents could be used to schedule OSHA inspections to determine the cause of the incident, identify any corrective measures that would have prevented the incident, and issue citations for infractions of OSHA standards. Third, VTL incident reports could be compiled and analyzed to look for accident trends and causes. This information could then be used to determine the need for additional requirements in the OSHA standards.

The Agency has determined that mandatory VTL reports are not needed to make sure that longshore workers are able to report safety problems to OSHA, to schedule OSHA inspections, or to produce statistical information. The OSH Act explicitly gives employees the right to report unsafe conditions and request a workplace inspection (29 U.S.C. 657(f)(1)). OSHA's regulations and policies allow employees to contact the Agency regarding unsafe working conditions and ask for a worksite inspection (see, for example, 29 CFR 1903.11). A large proportion of OSHA's annual inspections are conducted as a result of such employee complaints.

OSHA already has regulations at 29 CFR Part 1904 requiring employers to report any work-related fatality and any work-related accident resulting in the hospitalization of three or more employees. OSHA also responds to employee complaints, media reports of unsafe working conditions, and referrals from other parties who inform the Agency of safety and health problems. These regulations and policies are expected to give the Agency ample opportunity to investigate any serious VTL incidents that may occur without the need for additional reporting or other paperwork burdens.

OSHA does not agree with the ILA that it should delay the rulemaking until the Agency implements an incident-reporting system, collects data (presumably for several years), and produces reports on that information. OSHA has been monitoring marine terminals for VTL incidents for more than 20 years. Given the small number of incidents that have occurred during that time, this type of data collection is not likely to produce enough data to be worthwhile. In addition, a reporting system that would truly compare single-container lifts and VTLs would require the reporting of all single-lift and VTL incidents, and how many of each lifts is performed—a more burdensome requirement than simply requiring the reporting of VTL incidents. Finally, requiring a reporting system before adopting a VTL standard would result in unreasonable delay of the final standard. Unnecessarily delaying the safety provisions of this final rule could result in preventable longshore accidents, injuries, and fatalities.

H. Summary and Explanation of Regulatory Text

OSHA is issuing new provisions in the Longshoring and Marine Terminals Standards (29 CFR Parts 1918 and 1917) to regulate the use of VTLs. These new provisions are based on objective research, industry experience with VTLs, ISO standards, the ICHCA VTL guidelines, and the rulemaking record on VTLs contained in Docket S–025a. The provisions provide safe work procedures (engineering, work-practice, and administrative controls) for lifting two empty containers connected by interbox connectors. Testing has demonstrated that the interbox connectors required by the new provisions are substantially strong enough to lift two empty containers with a safety factor of at least five.

The new requirements for VTLs are contained in the Marine Terminals Standard (29 CFR 1917). The Longshoring Standard (29 CFR 1918) incorporates those requirements by reference. OSHA is requiring that VTLs only be performed by a shore-based container gantry crane or another type of crane that has the precision control necessary to restrain unintended rotation about any axis, that is capable of handling the load volume and wind sail potential of VTLs, and that is specifically designed to handle containers. In accordance with 29 CFR 1917.1(a), which states that cargo handling done by a shore-based crane is covered by Part 1917, the requirements that address the makeup of a VTL, such as the number of containers, are in Part 1917. Requirements that address the certification and testing of interbox connectors are in both Parts 1917 and 1918. Interbox connectors are vessel's gear, that is, gear owned and maintained by the vessel, and they would be addressed in Part 1918. However, interbox connectors can also be used in the marine terminal to assemble VTLs before they are loaded on the vessel; therefore, the same certification and testing requirements for interbox connectors that are contained in Part 1918 are also contained in Part 1917. The VTL requirements for Part 1917 are discussed first.

1. Definitions

OSHA had proposed to add definitions of the terms ''liftlocks'' and ''vertical tandem lift'' to § 1917.2 in the Marine Terminals standard and to § 1918.2 in the Longshoring standard. The final rule uses the term ''interbox connector,'' a term used in the proposed definition of ''liftlock,'' in place of the word ''liftlock.'' Consequently, the Agency is not including the proposed definition of ''liftlock'' in the final rule.

The final rule incorporates the definition of ''vertical tandem lift'' into the scope of the VTL provisions. Therefore, a definition of that term is unnecessary, and the final rule does not include the proposed definition of that term either.

2. Incorporation by Reference

OSHA had proposed to incorporate by reference into the Marine Terminal and Longshoring standards ISO Standard 3874, Amendment 2, Vertical tandem lifting (2002). This ISO standard limits forces during VTLs to 75 kN and requires the load-bearing surface area of interbox connectors used in VTL operations to be a minimum of 800 mm^2 (Ex. 40–9). The Agency has incorporated the necessary strength requirements into the text of the final rule. In addition, the final rule limits VTLs to two empty containers, making a weight limitation unnecessary. Thus, OSHA has not included the proposed incorporation by reference of the ISO standard in the final standard.

In addition, in § 1917.71(f)(3)(i), OSHA proposed to require containers lifted in VTLs to be ISO series 1 containers. The final rule does not contain an explicit requirement that VTLs be conducted only with ISO series 1 containers. OSHA believes that, with the standardization of intermodal containers, the only practical way to lift containers in a VTL is with standard

containers having top and bottom corner castings that interconnect with standardized interbox connectors. The final rule does contain requirements for the certification of these connectors. The Agency believes that it would be impractical, if not completely unworkable to use anything other than a standard ISO series 1 containers in a VTL operation. For example, the operation would encounter problems with the interbox connectors engaging in nonstandardized corner castings. In addition, the final rule explicitly prohibits lifting platform containers in VTLs. The Agency would consider the lifting of vertically coupled other types of non-ISO series 1 containers as being outside the scope of the final rule and subject to the general duty clause of the OSH Act.

3. Load Indicating Devices

OSHA had proposed, in the Marine Terminal standard, to require container gantry cranes used in VTL operations to have load indicating devices. The load indicting device was intended to ensure that the weight of a VTL did not exceed 20 tons as required by the proposal. As explained earlier in this section of the preamble, the Agency has decided to permit VTLs of empty containers only. The existing Marine Terminal standard requires the employer to know whether a container is empty or loaded before it is hoisted (29 CFR 1917.71(b)(1) and (b)(2)(ii)). In addition, as explained later in this section of the preamble, the final rule requires employers to verify that each container in a VTL is empty before it is lifted. OSHA has concluded that these provisions will ensure that only empty containers will be lifted in VTLs, making a requirement for load indicating devices unnecessary. Therefore, the final rule does not carry forward this proposed requirement.

4. Stowage Plan

OSHA proposed a requirement in the Marine Terminals Standard that a copy of the vessel cargo stowage plan be given to the crane operator and that the vessel cargo stowage plan be used to identify the location and characteristics of any VTLs to be lifted (proposed § 1917.71(b)(9)). This provision was intended to supplement existing § 1917.71(b)(1) and (b)(2)(ii), which require the gross weight of containers to be marked or a stowage plan to be available.

The final rule permits only empty containers to be lifted in a VTL. In addition, as explained later in this section of the preamble, the final rule requires employers to verify that each container in a VTL is empty before it is lifted. OSHA has concluded that these provisions will ensure that only empty containers will be lifted in VTLs, making requirements for the stowage plan to be provided to the crane operator and for the plan to be used to identify containers lifted in VTLs unnecessary. Therefore, the final rule does not include these proposed requirements.

5. VTLs

New paragraph (i) of § 1917.71 in the final rule adds requirements for VTL operations to the Marine Terminals Standard. These new requirements apply to operations involving the lifting of two or more intermodal containers by the top container, or VTLs.

Final § 1917.71(i)(1) requires each employee involved in VTL operations to be trained and competent in the safety-related work practices, safety procedures, and other requirements in this section that pertain to their respective job assignments. The rationale behind this requirement is explained earlier in this section of the preamble under the issue entitled ''Training.'' This provision in the final rule ensures that employees who are involved in VTL operations have the training needed to perform their tasks safely (safety-related work practices), perform their VTL-associated tasks so as to comply with the standard (safety procedures), and competently perform the inspections and determinations required by the final rule.

OSHA proposed to permit a maximum of two containers to be lifted in a VTL (proposed § 1917.71(f)(3)(i)). As explained earlier in this section of the preamble, the Agency has determined that a maximum of two containers may be safely lifted in a VTL. Therefore, OSHA has included this requirement in the final rule as § 1910.71(i)(2).

OSHA proposed to permit a maximum of 20 tons to be lifted in a VTL (proposed § 1917.71(f)(3)(i)). As explained earlier in this section of the preamble, the Agency has concluded that only empty containers may be lifted in VTLs. This will ensure that the capabilities of the corner castings and interbox connectors attaching the two containers are not exceeded.

In addition, the Agency believes that it is essential to ensure that containers lifted in a VTL are empty. The existing Marine Terminals standard requires that the employer know whether a container is empty or loaded before it is hoisted (§ 1917.71(b)(1) and (b)(2)(ii)). For containers being discharged from a vessel, most employers and employees rely on the vessel cargo stowage plan, also called a stow plan, that shows: The location of each container on the vessel, the container's unique identification number, the weight of the container, and other information, such as if the container contains hazardous material. For containers being loaded onto the vessel, the same information is contained on a stowage plan that shows where the containers are to be placed on the vessel. This method of determining the weight of a container is adequate for handling containers individually. This is because if the stowage plan understates the weight of the container, the hoisting of a fully loaded container will not overload the crane. However, it is not adequate for handling a VTL, because if the weights of multiple containers are understated, the hoisting of those containers in a VTL could overload the interbox connectors and corner castings joining the containers.

Evidence in the record indicates that containers that were supposed to be empty were, in fact, loaded. For example, at the 1998 meeting on VTLs, a crane operator testified:

> I know I've picked up containers they told me were empty and I say it's a load. And they say, no, it's an empty. I tell them, listen, this is a load. And they don't know it until they get it down. [1998–Tr. 252].

Another participant at the public meeting observed:

> What concerns Peck and Hale as an American based company that supplies equipment to ships worldwide is that of safety. OSHA can approve empty lifting but no one can guarantee that these containers are empty. Containers are shifted in ports. Containers are mismarked and not accurate[ly] weighed. [1998–Tr. 161]

This evidence was not disputed in the rulemaking record on the proposal. In fact, at the public hearing on the proposal, Mr. Tyrone Tahara testified that some containers in VTLs that were supposed to be with empty containers seemed to have load in them (Tr. 2–421). Therefore, the Agency has concluded that it is essential for the employer to ensure that containers are empty before they are lifted in a VTL, as required by final § 1917.71(i)(3). Although the rule does not prescribe a particular method for ensuring that a container is empty, OSHA intends that employers make a positive determination, such as through direct observation of the content of the container or by weighing it to make sure that its weight matches the tare weight marked on the container. For example, an employer could use a container crane's load-indicating device [30] to

[30] It should be noted that only load-indicating devices meeting § 1917.46(a)(1)(i)(A) are acceptable.

measure the weight of the container individually as the containers are positioned in a VTL or during the prelift. Although the stowage plan can be used to help locate potentially empty containers, employers may not rely solely on that plan in complying with new § 1917.71(i)(3).

Paragraph (i)(4) of § 1917.71 in the final rule addresses the type of crane that can be used to perform VTLs. The final rule requires VTLs to be performed only by shore-based container gantry cranes and other types of cranes that (1) have the precision control necessary to restrain unintended rotation of the containers about any axis, (2) are capable of handling the load volume and wind sail potential of VTLs, and (3) are specifically designed to handle containers. The rationale for this requirement is addressed previously in this section of the preamble under the issue entitled, ''Crane Type.''

Paragraph (i)(5) of § 1917.71 in the final rule requires that the crane operator conduct a prelift before hoisting a VTL. A prelift is a pause in the VTL as the initial strain is taken and the lifting frame wires are tensioned. This physically tests the interbox connectors to ensure that they are engaged. This is consistent with the practice used by Sea-Land, as previously described. Testifying on behalf of Sea-Land at the 1998 public meeting, Mr. Philip Murray stated that prelifts are a necessary safety precaution for VTLs, arguing that they helped detect interbox connectors that were not fully engaged (1998–Tr. 202). At the public hearing, Michael Bohlman also recommended that prelifts be conducted (Tr. 1–209). In addition, the ICHCA guidelines, in section 8.2.2.1.7, require prelifts.

The ILWU argued that prelifts did not necessarily ensure the safety of a VTL (Exs. 43–10, 47–4, 50–7), reasoning as follows:

> Contrary to OSHA's belief, requiring a crane operator to conduct a pre-lift before hoisting a VTL * * * will not necessarily ensure that the interbox connectors are properly engaged. The proposed rule does not specify how long the lift should take place. Nor does it establish that the locks and/or the containers' bottom corner castings can withstand the duration of the lift, even if the connectors are initially engaged. As explained above, severely stressed and/or internally cracked SATLs and cones and corner castings are not always viewable upon cursory inspection. In addition, a pre-lift does not ensure that the VTLs can withstand the sudden un-weighting effect that occurs when a crane's trolley goes over a rail splice or cracks in the rail. Moreover, if a VTL is at or near its 20-ton maximum weight limit, when the trolley hits a rail splice, the weight of the containers increases significantly on the rapid and jerking descent immediately following the splice. [Ex. 43–10]

Although OSHA agrees that prelifts cannot, by themselves, ensure the safety of VTLs, the Agency has concluded that VTLs can indeed be performed safely under certain circumstances and that prelifts are an essential component of ensuring employee safety. Prelifts will expose conditions involving two disengaged interbox connectors on one side. Limiting VTLs to empty containers ensures that the lift will be safe even if only two interbox connectors are fully engaged on opposite sides (that is, along the diagonal), a condition that the prelift may not detect. Inspecting interbox connectors and corner castings immediately before the lift ensures that the connectors are in proper working order, thus, making partial engagement less likely. Therefore, by requiring prelifts along with other necessary precautions, OSHA believes that the rule will adequately protect employees.

Proposed § 1917.71(f)(3)(iii) would have prohibited VTLs of containers with hazardous cargo, liquid or solid bulk cargoes, or flexible tanks that were full or partially full. The final rule requires containers lifted in VTLs to be empty. Thus, this proposed requirement is unnecessary.

Paragraph (i)(6) of § 1917.71 in the final rule prohibits VTLs of any containers that are in the hold of a vessel. Containers are stacked in the hold in cell guides (steel beams constructed to secure stacks of containers). There is not enough clearance for the handle of an SATL to fit between the interbox connector and the cell guide—the handles would break off in the cell guide as containers were lowered into the guide. In such cases, it would be impossible to inspect the interbox connectors immediately before the lift or to determine the condition of the containers. No substantial objections were received to this requirement, which was proposed as § 1917.71(f)(3)(v).

Paragraph (i)(7) of § 1917.71 of the final rule prohibits the handling of VTLs when the wind speed exceeds 55 km/h or the crane manufacturer's recommendations, whichever is lower. This limits both the loads imposed on the interbox connector-to-corner casting connection and the ability of the crane operator to safely handle a VTL and keep it under control. This provision is similar to proposed § 1917.71(f)(3)(vi), which would have set a maximum wind speed of 55 km/h without regard to the crane manufacturer's recommendation.

Several rulemaking participants were concerned that the proposed maximum wind speed for VTL operations was too high (Exs. 43–4, 43–10, 44–1, 47–3, 51–4, 54–28). Noting the role that wind conditions play in VTLs, the ILA argued that the proposed 55-km/h limit was excessive (Ex. 44–1). Stating that common sense demands a lower maximum wind speed for VTLs than for single lifts, the ILWU urged OSHA to conduct studies to establish a safe wind speed (Ex. 43–10). Some rulemaking participants maintained that factors such as the VTL configuration, weight, forecasts, and equipment should be considered in setting a maximum wind speed (Exs. 43–5, 44–1, 51–4, 54–28). For example, David Reda, an ILWU member, stated:

> Performing [VTLs] at a maximum weight of 20 tons and/or empties. You have twice the surface area which when wind speed is added can push the tandem load in an uncontrollable twisting manner. This is hard on the crane and the wire can be dislodged from the hoisting pulleys. [Ex. 43–5]

Michael Bohlman countered that the proposed 55-km/h limit was too low for two-tier VTLs (Ex. 50–10–2):

> Under both the OSHA proposed rule and the Safety Panel's guidelines, VTL operations should cease if the wind speed exceeds 34 mph. The Safety Panel's recommendation however, was based on a three-tiered VTL configuration. Two tier VTL units can be operated safely in much higher winds, winds that are 25 to 40% higher than those established for safe 3-tier operation. [Ex. 50–10–2]

He urged OSHA to permit higher wind speeds if the final rule prohibited three-tier VTLs. Other rulemaking participants generally supported the proposed 55-km/h wind speed limit (Exs. 50–10–3–1, 50–12). Their support was based on the ICHCA guidelines.

OSHA recognizes that the ICHCA guidelines (Ex. 41) limit the maximum wind speed to 55 km/h based on loading considerations involved in a three-tier VTL. However, as noted previously, other factors besides maximum safe load come into play in the determination of a maximum safe wind speed. For example, a higher wind speed can cause the load to rotate more (Tr. 2–296–297). Michael Arrow stated that a maximum wind speed of 55 km/h is based both on engineering analysis and practical experience (Ex. 50–10–3–1). In addition, the Agency has used 48 to 64 km/h as a guideline for when to consider wind speeds as being hazardous for work that may involve material handling or

---

The alternative devices permitted by § 1917.46(a)(1)(i)(B) and (a)(1)(i)(C) do not provide a direct indication of the weight of the load. Thus, employers cannot rely on these alternative devices to ensure that each container lifted in a VTL is empty.

working at heights. (See, for example, 55 FR 13360, 13379 (April 10, 1990), the Walking and Working Surfaces proposed rule, and 59 FR 4320, 4373 (January 31, 1994), the Electric Power Generation, Transmission, and Distribution final rule.) Therefore, OSHA has concluded that the 55-km/h limit on wind speed for VTL operations is reasonably necessary and appropriate.

Some commenters raised concerns about wind velocity warning systems and manufacturers' recommendations regarding maximum wind speed (Exs. 43–10, 44–1, 47–4, 57). The ILA claimed that wind detectors have been problematic, but offered no evidence to support their assertion (Ex. 44–1). The ILWU noted that the proposed rule provided no guidance on warning systems and recommended that the final rule require them (Exs. 43–10, 47–4). They were also concerned that manufacturers' recommendations would override the standard's maximum wind speed as follows:

> The proposed rule provides no guidance on wind warning devices—apparatuses which sound an alarm to workers when the maximum wind velocity has been reached during container operations. The current practice for single-hoist (standard) container operations is to set each crane's wind warning according to the manufacturer's recommendation. The ILWU strongly urges that should OSHA establish a standard for maximum wind speed for VTL operations, this standard should be required for all VTLs operations irrespective of the crane manufacturers' recommendation. [Ex. 47–4]

Existing § 1917.45(g)(3) requires cranes located outdoors to have wind-indicating devices to provide warnings when the wind velocity approaches the crane manufacturer's recommended maximum. The Virginia International Terminals crane operations manual states that the warning system installed on their cranes provides a warning at 55 km/h and that crane operations begin shutting down at that speed (Ex. 57). It is possible that some crane manufacturers set lower maximum wind velocities than those for the Virginia International Terminal cranes. Because of this, the final rule, in § 1917.71(i)(7) requires the maximum wind speed for VTL operations to be the lesser of (1) 55 km/h or (2) the crane manufacturer's recommendations. This will ensure that cranes are operated within their safe operating conditions and will limit wind velocities to a recognized safe level for VTL operations. The language in the final rule also clarifies that the absolute maximum wind speed for VTL operations is 55 km/h even if the crane manufacturer sets a higher maximum recommended wind speed.

Paragraph (i)(8) of § 1917.71 in the final rule sets requirements for interbox connectors used in VTL operations. Paragraph (i)(8)(i) requires interbox connectors to lock automatically and unlock manually. This provision specifically prohibits the use of manual twistlocks and latchlocks. This provision has been taken from the definition of ''liftlock'' in the proposal and from proposed § 1917.71(m).

Manual twistlocks, which have largely been replaced by SATLs due to OSHA's container top safety regulations and increased productivity (see discussions in the Longshoring and Marine Terminals Final Rule, 62 FR 40174), do not have a positive locking mechanism. By contrast, SATLs have a locking device that uses spring tension to prevent it from unlocking. Manual locks could unlock through normal container handling, making them unsuitable for lifting. The limits and weaknesses of latchlocks for VTLs were more fully discussed earlier in this section of the preamble. The ILA supported the proposal's prohibition against the use of manual twistlocks (Exs. 44–1, 55–1). The ICHCA guidelines, in section 8.1.1.11, also prohibit manual twistlocks from being used in VTL operations (Ex. 41).

Paragraph (i)(8)(ii) of § 1917.71 in the final rule requires interbox connectors used in VTL operations to indicate whether they are locked or unlocked. Paragraph (i)(8)(iii) of § 1917.71 in the final rule requires all interbox connectors in a VTL to lock and unlock in the same manner. Some SATLs lock and unlock in a horizontal direction, others in a vertical direction. What is important and required is that all the twistlocks in a VTL work in the same manner to allow employees involved in VTLs to determine readily whether or not the locks are locked or unlocked before a lift is performed. For an observer to determine whether the interbox connectors are locked or unlocked, they must have a telltale, which is typically a solid metal lever or a flexible wire, possibly painted to enhance visibility. This allows employees working with VTLs to see whether an interbox connector is locked or unlocked.

These two paragraphs in the final rule are based on proposed § 1917.41(l)(1)(vii). This provision in the proposal also required all interbox connectors on a vessel to operate in the same direction and required the telltale on twistlocks to be visible from deck level. OSHA has not included these requirements in the final rule. As explained earlier in this section of the preamble, OSHA has decided to require a visual inspection of each interbox connector and corner casting involved in a VTL immediately before the lift. In addition, in § 1917.71(i)(5), the final rule requires a prelift. The inspection and the prelift will help ensure that interbox connectors will be properly engaged. The inspections will normally be conducted close to the containers being lifted, so there is no need for employees to be able to determine if the twistlocks are engaged when the containers are stacked on a vessel. Thus, the requirements for the telltale to be visible from deck level and for all twistlocks on a vessel to operate the same way are unnecessary.

Paragraph (i)(8)(iv) of final § 1917.71 requires interbox connectors used in VTLs to be certificated as loose gear under § 1917.50. The marine terminal standards, in § 1917.50, require certain equipment to be certificated by a competent authority. Currently, loose gear (which under the final rule would include interbox connectors used in VTLs) in the U.S. is certificated by OSHA-accredited agencies under 29 CFR part 1919, Gear Certification. Foreign flag vessels carry certificates issued by the recognized body appropriate for that country. Often the recognized body issuing certifications is a classification society such as the American Bureau of Shipping, Lloyds Register, or Bureau Veritas.

OSHA and the U.S. Coast Guard are the competent authorities for certifications in the United States. Other countries would have their own competent authority that would have jurisdiction over VTL operations in that country. Certification of interbox connectors used in VTLs, which is verified by certificates issued by agencies authorized by a competent authority, is the primary way an employer will determine that SATLs on a vessel or ashore can be used for lifting. These certificates are found in the vessel's cargo gear register.

Some rulemaking participants supported the proposed requirements for certificating interbox connectors used in VTLs (Exs. 43–10, 44–1, 47–3). For example, the ILWU argued that major shipping companies do not operate entirely with their own equipment and that there are random combinations of containers and connectors (Ex. 43–10). They urged OSHA to require certification of containers as well as interbox connectors.

Some comments opposed the proposed requirement for SATLs used in VTLs to be certificated (Ex. 47–5). For example, USMX stated:

The regulation the agency proposes requires certain markings on SATLs and certain testing protocols that have absolutely nothing to do with the strength or quality of the SATL. It is undisputed (and substantiated by the NIST Report) that every single SATL in use today was fabricated to conform to international standards that would permit complete confidence in conducting VTL configurations as outlined by ISO 3874. Thus * * * it should be clear that the regulations concerning the certification of SATLs as liftlocks are not necessary and present a significant impediment to the utilization of VTLs. [Ex. 47–5]

As explained in detail earlier in this section of the preamble, OSHA has concluded that the NIST tests are not representative of all SATLs currently in use. In addition, contrary to USMX's position, the NIST testing indicates that some SATLs do not meet ISO requirements on load-bearing area (Ex. 40–10). In addition, the ICHCA guidelines, in sections 8.1.3.1.2 and 8.1.3.2.1, require twistlocks used in VTL operations to be certificated (Ex. 41). Consequently, OSHA has concluded that certification is necessary to ensure that interbox connector-corner casting assemblies used in VTLs have adequate strength to ensure the safety of the lift. This conclusion is also consistent with the Agency's position that interbox connectors used in VTLs are loose gear and must therefore meet the current marine terminal standards requirements on loose gear, which requires certification under § 1917.50(c)(6).

On the other hand, OSHA has concluded that containers are not loose gear and thus do not need to be certificated. Containers are widely lifted in single units without being certificated. The ISO standards for containers and corner castings ensure that they are capable of safely supporting at least two empty vertically coupled containers. In addition, the prelift inspection required by § 1917.71(i)(9)(iii) will help ensure that the container is in good condition and that neither the container nor the corner casting will fail during the lift.

Paragraphs (i)(8)(iv)(A) and (i)(8)(iv)(B) of § 1917.71 in the final rule require interbox connectors used in VTLs to be certified as having a minimum load-bearing surface area of 800 mm^2 and as having a safe working load of 98 kN (10,000 kg) with a safety factor of five when the load is applied by means of two corner castings with openings that are 65.0 mm wide or equivalent devices. As explained in detail earlier in this section of the preamble, these requirements will ensure that interbox connectors are strong enough to withstand the loads imposed by VTL operations.

Paragraph (i)(8)(v) of § 1917.71 requires each interbox connector used in a VTL to have a certificate that is available for inspection and that attests that the connector meets the required strength criteria listed in paragraph (i)(8)(iv).

The ICHCA guidelines, in sections 8.1.3.1.2 and 8.1.3.2.1, require twistlocks used in VTL operations to be certificated with a safe working load of at least 10,000 kg on the basis of a safety factor of at least five (Ex. 41). ISO 3874 requires interbox connectors used in VTL operations to have a minimum load-bearing surface area of 800 mm2.

Paragraph (i)(8)(vi) of § 1917.71 requires that each interbox connector used in a VTL to be clearly and durably marked with its safe working load for lifting, together with a number or mark that identifies it and connects it with its test certificate.

This paragraph was taken from proposed § 1917.71(l)(1)(vi). The marking requirement was opposed by the International Chamber of Shipping, which argued that such marking presented an insurmountable challenge considering the vast numbers of SATLs in use (Ex. 47–1).

The ICHCA guidelines has required the same markings as the final rule since January 1, 2003 (Ex. 41). Thus, a substantial number of existing SATLs intended for use in VTLs already have these markings in place. In addition, employers, employees, and OSHA would have no way of distinguishing between complying SATLs and those that are not certificated without such markings. (The need for certification was discussed previously in this section of the preamble.) Thus, OSHA has carried the proposed requirement into the final rule without substantial revision.

Paragraphs (l)(1)(iii) and (l)(1)(iv) of proposed § 1917.71 addressed inspection of interbox connectors used in VTLs. Paragraph (k) of proposed § 1917.71 would have required damaged or defective connectors to be removed from service and prohibited their use for lifting. This paragraph would also have required a means of keeping damaged or defective interbox connectors separate from operating interbox connectors. These provisions in the proposed rule were intended to weed out damaged and defective interbox connectors in a systematic way.

The proposed rule would have required a thorough inspection by a competent person at least once every 12 months. This proposed provision garnered significant attention by rulemaking participants. Some commenters objected to the proposed requirement for annual thorough examination by a competent person (Exs. 43–7, 47–1, 47–5, 50–10–2, 50–10–3, 50–12, 54–3). They recommended that OSHA allow adherence to an approved continuous examination program (ACEP), as outlined in the ICHCA guidelines, in lieu of annual inspections. Michael Bohlman described ACEP as follows: ''Examinations under an [ACEP] are required to be carried out in connection with major repair, refurbishment, or on-hire/off-hire interchange at intervals of not more than 30 months'' (Ex. 50–10–2).

Section 8.1.3.3 of the ICHCA guidelines (Ex. 41) addresses the maintenance and examination of interbox connectors used in VTLs. Section 8.1.3.3.3 requires each such interbox connector to be inspected by a competent person at least once every 12 months, in language mirroring the first sentence of proposed § 1917.71(l)(1)(iii). However, the ICHCA guidelines also specifically recognize ACEPs in section 8.1.3.3.4 as one way of meeting the requirement for annual inspection.

Michael Arrow, representing USMX, argued that these programs make marking interbox connectors with the inspection date unnecessary (Ex. 50–10–3). Some of the commenters supporting ACEPs maintained that such programs ensured that interbox connectors were examined more frequently that once a year (Exs. 43–7, 54–3). Michael Bohlman, speaking on behalf of USMX, stated that ACEPs encourage a continuous heightened level of scrutiny (Ex. 50–10–2). However, responding to questions at the public hearing, Mr. Bohlman admitted that this type of program does not ensure the inspection of all interbox connectors:

We do about 10 percent a * * * voyage. There's probably statistics that someone could dig out of a book someplace that tells you over the course of a year you'll guarantee you're going to get 95 percent of the locks and over two years, 99.9 percent. [1998 Tr. 211–212]

Other rulemaking participants recommended that the standard not permit continuous examination programs (Exs. 43–10, 43–10–3, 43–10–7, 50–7, 54–30–2, 62, 64). Christine Hwang, commenting for the ILWU, argued that under an ACEP interbox connectors would be inspected less frequently than once per year (Ex. 43–10). Others argued that there was no adequate way of tracing inspections performed on individual connectors (Exs. 43–10–3, 64). For example, Douglas Getchell, speaking on behalf of the ILWU, stated:

Given the fact that twistlocks have no individual identification numbers and also that batch numbers (which would be of limited usefulness) soon become unreadable due to wear and tear, it would be interesting to discover exactly how Sea-Land is able to know that they have inspected 99.9% of their twistlocks. [Ex. 43–10–3]

The ILWU also maintained that ACEP is not appropriate for containers (where it has been used for many years) and would be even more problematic for interbox connectors used in VTLs (Ex. 64). They further argued that the ICHCA guidelines are problematic because they rely on the acceptance of inspection procedures performed by entities outside OSHA's jurisdiction (Ex. 54–30–2).

OSHA has concluded that an ACEP does not ensure that interbox connectors will be inspected more often than once every 12 months. In fact, based on Michael Bohlman's testimony, it is clear that Sea-Land's ACEP would capture only 95 percent of these devices in a 12-month period (1998–Tr. 211–212). In addition, Mr. Bohlman's testimony indicates that, in an ACEP, longshore workers would be the ones who do the inspections as the interbox connectors are being used, and that such inspections would not involve disassembly (Tr. 1–174—1–175). As explained later in this section of the preamble, the final rule requires inspections of the sort described by Mr. Bohlman immediately before each VTL. Therefore, the final rule does not recognize ACEPs as a means of compliance with the final rule's inspection requirements.

Several labor representatives stated that the proposed annual inspection is insufficient to ensure that interbox connectors are not damaged or defective during use in VTLs (Exs. 43–10, 44–1, 43–10–6, 51–4). For example, Herzl Eisenstadt, representing the ILA, stated:

The relative risk of VTL lifts of more than two containers must be correlated with the quality and dependability of the lift-locks (''shoes'') that are to be used in such moves. OSHA is abundantly aware that twistlocks * * * are connecting, rather than lifting, devices. The pressures and forces upon lift-locks are no different from those on [SATLs] during cross-ocean voyages. They can and do create damages and weaknesses that are parlayed during subsequent trips. The sooner that they are caught, the less likely that they will set the stage for a serious accident. It is therefore all the more imperative that properly noted and coded lift-locks be inspected more often than annually and that the periods for their inspection and, if need be, servicing, be readily ascertainable from markings on the body of the device. [Ex. 44–1]

Some commenters recommended that OSHA require inspection of these devices immediately before use in a VTL (Exs. 43–10, 50–7, 64). Christine Hwang, representing the ILWU, also recommended that interbox connectors be cleaned, as follows:

If OSHA ultimately permits SATLs or cones to be used for purposes of hoisting containers, these locks should not only be examined visually... but also tested for their structural integrity and proper functioning prior to and after each and every use. In addition to a pre-shift inspection of connectors and their corresponding manufacturers' certification, the locks should be thoroughly cleaned after each and every discharge. [Ex. 43–10]

Interbox connectors and containers are subject to considerable forces and abuse during shipping and handling (Exs. 43–8, 43–10–3, 50–7). According to industry expert Michael Arrow, a voyage across the sea exposes connectors and containers to greater forces than during VTLs (Tr. 1–45, 1–150—1–151). In addition, SATLs and corner castings are exposed to sea water, dirt, grime, snow, ice, and debris, which can interfere with the operation of the interbox connectors and can prevent them from fully engaging with corner castings (Exs. 43–10, 43–10–6, 47–6, 54–28). The interbox connectors are frequently dropped (Ex. 50–7), and containers land hard onto container truck chassis (Tr. 2–122—123). Although Mr. Arrow insisted that SATLs have proven to be resistant to dropping and shocks (Ex. 54–1), OSHA has concluded that the abuse and severe stresses these devices get during shipping and handling could damage them. OSHA has calculated the forces involved in lifting two empty containers to be near the safe working load for interbox connectors and corner castings. If the forces at sea are greater as the industry witnesses claim, then it is quite likely that these devices are commonly overloaded during transport. In addition, evidence that interbox connectors and corner castings are subject to debris and other contamination was uncontroverted. Thus, OSHA has determined that interbox connectors and containers, including, in particular, their corner castings, must be inspected immediately before being used in a VTL.[31] Accordingly, the final rule, in § 1917.71(i)(9), requires such an inspection. The requirement to inspect each interbox connector to determine that it is fully functional will uncover any dirt or debris that may hinder operation and eliminates the need for an explicit requirement to clean these devices.

For the purpose of paragraph (i)(9), ''immediately before use in the VTL'' means that the devices are inspected before the VTL takes place but after any event that could reasonably be suspected of damaging them. This means that the corner castings and interbox connectors could be inspected before the VTL is assembled, and the VTL stored in the terminal until it is ready to be loaded onto the ship. However, if an event occurs that could have damaged a corner casting or interbox connector (for example, a hustler colliding with an assembled VTL), the affected corner castings and interbox connectors would need to be reinspected. Additionally, the interbox connectors and corner castings in vertically coupled containers that have been shipped overseas would need to be inspected after shipment before the containers could be used in a VTL.

The proposal did not address inspection of containers or corner castings. Two rulemaking participants argued that the existing ACEPs for containers worked to ensure the quality of containers (Exs. 50–10–3, 50–12). For example, Michael Arrow, representing USMX, stated that ''the goal of [ACEPs] is quality assurance of components on a sound basis'' (Ex. 50–10–3). He noted that the ''ACEP option has been in place over twenty years with safety combined with widespread acceptance in the maritime industry'' (Ex. 50–10–3).

Other rulemaking participants disagreed that ACEPs were adequate and recommended that the final rule address the inspection of containers and corner castings (Exs. 43–10, 43–10–2, 43–10–7, 44–1, 47–4, 50–7, 54–30–2, 62). For example, Christine Hwang, representing the ILWU, was concerned about the lack of inspection or testing requirements for containers, stating:

The testing and certification gap is not only devoid of common sense, but also completely ignores the operational realities of container operations on the waterfront. The bottoms of containers and comer castings, which are critical to VTLs, are the most vulnerable to structural damage and weakening due to extremely rough handling and environmental conditions. [Ex. 43–10]

There was testimony that, due to the way that container inspections were performed under at least one ACEP, it was not possible to view the bottom castings completely (Tr. 2–389—2–390). Several commenters noted that, although the Coast Guard spot checks containers for safety, these inspections cannot ensure the integrity of every container used in VTLs (Exs. 43–10–2,

[31] As noted in section VI, ''Final Economic Analysis and Regulatory Flexibility Analysis,'' later in this preamble, OSHA realizes that requiring an inspection immediately before the VTL may make ship-to-shore VTLs impractical.

47–4). Other rulemaking participants argued that ACEPs are not adequate to ensure the safety of containers and corner castings (Exs. 43–10, 43–10–7, 62). For example, Christine Hwang, representing the ILWU, noted that, under the ACEP, containers are only inspected 5 years after their manufacture and every 30 months after that (Ex. 43–10).

There is evidence in the rulemaking record that containers and their corner castings may be damaged during use or clogged with debris (Exs. 43–10, 43–10–4, 43–10–6, 54–28). For example, the ILWU submitted photographs of damaged containers (Ex. 43–10–4). These containers would be unsuitable for use in VTLs. Other commenters noted that debris, ice, and snow could prevent interbox connectors from fully deploying, resulting in a load-bearing surface area that was too small and therefore potentially unsafe (Exs. 43–10, 43–10–6, 54–28). OSHA shares the concerns of these rulemaking participants that containers and corner castings could be used in VTLs when they are either damaged or when the corner castings do not provide a suitable load-bearing surface area. On the basis of the evidence that containers and corner castings with such defects are currently in use, the Agency has concluded that existing ACEPs are insufficient to ensure that containers and corner castings are in a condition making them suitable for VTLs. Thus, in the final rule, OSHA is requiring that containers and corner castings be included in the mandatory prelift inspection.

Some rulemaking participants argued that the standard should require a detailed inspection, including disassembly of each interbox connector (Exs. 50–7, 54–30–2, 64). For example, Albert Le Monnier, commenting on behalf of the ILWU, stated that ''[a] true inspection would require the dismantling of the SATL in order to view the internal components'' (Ex. 50–7). Without this inspection, he maintained that the most critical part of the interbox connector, the stem, which is covered by a housing, would be left unexamined. He also stated that the examination should include ultrasonic or radiographic testing as described in the ILO Code of Practice on Security, Health and Safety in Ports (Ex. 54–30–2).

On the other hand, Michael Bohlman, representing USMX, testified that a detailed inspection involving disassembly of the interbox connector is unnecessary, stating:

> The typical lock breakage, which does happen, is the result not of a tension load, but of a torsional load on the lock.
>
> For example, two containers are pried apart. When that happens, when you start to get torsion, the bending in the shaft, the lock will bind up. So typically, if you've got a lock that's partially deformed, that will bind up and you won't be able to use it well before you're going to hit a failure point in a subsequent lift operation. Cracking, per se, in the shaft between the housing is not an issue. [Tr. 1–175]

Mr. Bohlman also rebutted the need for routine ultrasonic or radiographic testing by noting that the ILO Code of Practice on Security, Health and Safety in Ports demands such testing only ''where appropriate'' (Ex. 54–3). He noted that the components that typically fail are the spring and handle mechanisms.

OSHA has concluded that, while a detailed inspection of interbox connectors before use in a VTL is necessary, disassembly and testing of these devices is unnecessary, as well as impractical. As Mr. Bohlman noted, the components that fail can typically be inspected readily without the need to disassemble an interbox connector or subject it to laboratory testing. In addition, disassembly of the connector introduces the possibility of improper reassembly, which could create hazards. The Agency does not believe that the risk of introducing these hazards is justified by the risk of cracking in areas not visible without disassembly. Thus, the final rule requires the inspection to ensure that interbox connectors are free from obvious structural defects. The inspection must include a check of the physical operation of each interbox connector to determine that the lock is fully functional with adequate spring tension on each head and a check for excessive corrosion and deterioration. These checks will ensure that each interbox connector is safe for use in a VTL.

Some commenters urged OSHA to require interbox connectors to be marked with the date of the last inspection or the period for which it was valid (Exs. 44–1, 51–4).

The Agency has concluded that requiring the inspection to be performed immediately before the VTL eliminates the need to mark inspection periods or dates on interbox containers or containers. The employees performing the operation will either see the inspection take place or will be able to ask those responsible whether it has been performed.

The ILWU also touched on the need to train employees performing inspections (Exs. 43–10, 43–10–3, 50–7, 64). Douglas Getchell, speaking on behalf of the IWLU, stated that ''[o]nly the obvious wrecks are likely to be identified by the average longshore worker'' (Ex. 43–10–3).

OSHA agrees that only employees trained in inspecting containers, corner castings, and interbox connectors would be able to detect anything other than the most obvious defects. The standard's requirement for thorough examinations of these VTL components demands that employees performing inspections be capable of detecting defects or weaknesses and be able to assess their importance in relation to the safety of VTL operations. Thus, the final rule requires this in § 1917.71(i)(9)(i).

Paragraphs (i)(9)(ii) and (i)(9)(iii)of § 1917.71 in the final rule sets the parameters that visual inspections must meet. Inspections must include:

1. A visual examination of each container, interbox connector, and corner casting to be engaged with the interbox connector for obvious structural defects. Obvious structural defects, such as those shown in the photographs submitted by the ILWU (Ex. 43–10–4), would clearly threaten the safety of a VTL.

2. A check of the physical operation of each interbox connector to determine that the lock is fully functional with adequate spring tension on each head. Michael Bohlman stressed that this was one of the key items an inspection should address (Tr. 1–113). If the interbox connector is not functioning properly or if the spring tension is inadequate, the lock may not fully engage, lowering the safe working load of the corner casting-interbox connector assembly as noted previously in this section of the preamble.

3. A check for excessive corrosion and deterioration. Excessive corrosion and deterioration can weaken containers, corner castings, and interbox connectors (Ex. 41; Tr. 2–254).

4. A visual examination of each corner casting to ensure that the opening to which an interbox connector will be connected has not been enlarged and that welds are in good condition. Defective welds can weaken containers (Tr. 1–45, 1–266), and enlarged openings can lead to load-bearing surface areas that are too small.

Paragraph (i)(9)(iv) of § 1917.71 in the final rule requires the employer to establish a system to remove damaged and defective interbox connectors from service. Paragraph (i)(9)(v) of § 1917.71 in the final rule requires defective and damaged interbox connectors to be removed from service and not used for VTLs until repaired. These provisions were taken from the last sentence of proposed § 1917.71(l)(1)(iii), which

would have required defective interbox connectors to be removed from service. No comments were received on this provision in the proposal. However, rulemaking participants discussed several ways of separating damaged and defective twistlocks from good ones, including disposing of bad ones (Tr. 2–363) or placing them in a separate bin (Tr. 1–156, 2–125, 2–144). However, there was also evidence that longshore workers place bad interbox connectors in bins reserved for good ones, particularly if there was nowhere to place the defective ones (Tr. 2–167, 2–287, 2–422). Thus, the Agency has concluded that employees need a system in place that will enable them to separate damaged and defective interbox connectors from good ones. Paragraph (i)(9)(iv) of § 1917.71 in the final rule adopts a requirement for employers to establish such a system.

Paragraph (i)(9)(vi) of § 1917.71 in the final rule prohibits lifting containers with a damaged or defective corner casting in a VTL. The proposal had no counterpart to this requirement. OSHA has included it in the final rule as a necessary complement to the final rule's requirement to inspect containers and corner castings. Without such a requirement, the inspection of containers and corner castings would not be effective in preventing the lifting of unsafe containers. It should be noted that existing § 1917.71(g)(2) requires any intermodal container found to be unsafe to be identified as such, promptly removed from service, and repaired before being returned to service.

As noted earlier, platform containers are those that are open on the sides and top, but have panels on both ends. These end panels are either fixed or can be folded flat with the floor of the container. The final rule, in § 1917.71(i)(10), prohibits lifting platform containers as part of a VTL. The rationale behind this provision is explained earlier in this section of the preamble under the issue entitled ''Platform containers.''

6. Transporting Vertically Coupled Containers

Paragraph (j)(j) of § 1917.71 in the final rule addresses transporting vertically coupled containers. Moving two containers on marine terminal equipment, such as flatbed trucks and bomb carts, can raise the center of gravity higher than the equipment was designed for, increasing the possibility of overturning. To help prevent this, paragraph (j)(1) requires equipment used to transport vertically connected containers to be specifically designed to handle the connected containers safely or evaluated by a qualified engineer and determined to be capable of operating safely in this mode of operation.

Proposed § 1917.71(i) defined a qualified person as ''one with a recognized degree or professional certificate and extensive knowledge and experience in the transportation of vertically connected containers who is capable of design, analysis, evaluation and specifications in that subject.'' OSHA has not included this provision in the final rule. The intent of the proposed provision was to require a qualified engineer (that is, one with a degree or license in a field of engineering related to the safe design of mechanical equipment, such as mechanical engineering) to perform the evaluation of equipment used to transport vertically coupled containers if the equipment being used to transport the vertically connected containers was not specifically designed for this purpose. The final rule contains an equivalent requirement in the text of § 1917.71(j)(1).

Safe transport of vertically connected containers and safe operating speeds are part of the transport plan required in final § 1917.71(j)(2). This paragraph requires that a written transport plan be developed and implemented to facilitate the safe movement of vertically connected containers in a marine terminal. The plan must include safe operating speeds, safe turning speeds, and any conditions unique to the terminal that could affect the safety of the VTL operations. As noted earlier in this section of the preamble, employers may use the method in the ICHCA guidelines to calculate safe operating speeds for transporting vertically connected containers at a terminal. This paragraph and the rationale behind it are further explained earlier in this section of the preamble under the issue entitled ''Coordinated transportation.''

Paragraph (k) of § 1917.71 in the final rule addresses safe work zones. This provision requires employees to be clear of the safe work zone when vertically connected containers are being transported to protect the employees in case the containers fall or overturn or a VTL fails during a lift. This safe work zone is not required when vertically connected containers are not in motion. (However, it should be noted that existing §§ 1917.71(d)(2) and 1918.85(e) prohibit employees from working beneath suspended containers.) Paragraph (k) of § 1917.71 in the final rule requires the employer to establish a zone that is sufficient to protect employees in the event that a container drops or overturns. The standard also requires the transport plan to specify the safe work zone and procedures to ensure that employees are not in this zone when vertically connected containers are in motion. This paragraph and the rationale behind it are further explained earlier in this section of the preamble under the issue entitled ''Safe work zones.''

7. Longshoring

OSHA had proposed separate requirements for VTLs under the longshoring standards in part 1918 (64 FR 54298, 54317). The proposed requirements for part 1918 dealt only with interbox connectors used in VTLs. The proposal for part 1918 did not repeat the other VTL requirements proposed in part 1917 (marine terminals), such as limiting VTLs to two containers connected vertically and imposing a load limit of 20 tons. The marine terminal provisions, however, would have supplemented the interbox connector requirements in the longshoring portion of the proposal.

In the final rule, the Agency has in part 1918 simply incorporated by reference the final VTL requirements from the marine terminal standards in part 1917. This will clarify that VTL operations must comply with the same set of requirements regardless of whether part 1917 or part 1918 applies.

It should be noted that VTL operations must be performed using cranes meeting final § 1917.71(i)(4). As noted earlier, this provision requires cranes other than shore-based container gantry cranes to:

(1) Have the precision control necessary to restrain unintended rotation of the containers about any axis;

(2) Be capable of handling the load volume and wind sail potential of VTLs; and

(3) Be specifically designed to handle containers.

A ship's crane may be used for VTL operations only if it meets these criteria.

VI. Final Economic Analysis and Regulatory Flexibility Analysis

The Occupational Safety and Health Act of 1970 requires OSHA to demonstrate the technological and economic feasibility of its occupational safety standards. Executive Order (E.O.) 12866 and the Regulatory Flexibility Act (RFA) require Federal agencies to analyze the costs, benefits, and other consequences and impacts, including small business impacts, of their regulatory actions. Consistent with these requirements, OSHA has prepared this Final Economic Analysis (FEA) to accompany this final standard. The final standard on vertical tandem lifts

establishes safe limits and work practices for employees while transporting two empty intermodal containers connected at their corners with interbox connectors. The final standard applies to the transport of VTLs between ship and shore, as well as VTL-related operations within marine terminals.

The Agency has determined that this is neither an economically significant action under E.O. 12866 or a major rule under the RFA. As required by the RFA, the Agency has assessed the potential impacts of the final standard on small entities. This rule is not a significant Federal intergovernmental mandate, and the Agency has no obligations to conduct analyses of this rule under the Unfunded Mandates Reform Act of 1995.

This analysis will present the profile of affected industries, a summary of economic benefits and costs, and the Agency's feasibility determinations. The analysis will then address several related economic issues that were brought up during rulemaking: the productivity advantage of VTLs of three tiers of containers; occupational safety standards as a barrier to trade; and the impact of the final standard on port competitiveness, congestion, and ''productivity necessities.''

The Agency received virtually no comment in the record on its preliminary economic analysis. There was considerable comment on productivity effects made possible by VTLs, however.

A. Industrial Profile

Table 2 identifies the affected industries and describes some of the characteristics of employers potentially affected by the final VTL standard.

TABLE 2—INDUSTRIAL PROFILE

	NAICS 488310 port & harbor operations	NAICS 483111 deep sea freight transportation	NAICS 483113 coastal & Great Lakes freight transportation	Total all affected sectors
All Establishments	212	507	301	1,020
Employees (ee's)	6,037	15,663	8,393	30,093
Revenues	$643,203,331	$15,455,878,053	$4,270,754,490	$20,369,835,874
Profits (7% of revenues)	$45,024,233	$1,081,911,464	$298,952,814	$1,425,888,511
Establishments with fewer than 20 ee's	179	379	223	781
Employees	850	2,152	223	3.225
Revenues/estab.	$571,677	$3,802,768	$3,023,502	
Profits/Establishment	$40,017	$266,194	$211,645	
Establishments w/100 to 499 Employees	5	36	15	56
Employees	1,052	6,575	3,293	10,920
Revenues/estab.	$77,808,832	$155,591,006	$39,740,515	
Profits/establishment	$5,446,618	$10,891,370	$2,781,836	
Establishments more than 500 ee's	3	5	2	10
Employees	3,231	3,388	1,400	8,019
Revenues/estab.	$33,305,333	$301,600,000	$357,800,000	
Profits/establishment	$2,331,373	$21,112,000	$25,046,000	

Source: Office of Regulatory Analysis.
Profit rates taken from Robert Morris Associates, 1998–1999 (RMA, 1998).
Employees, establishments, and revenues taken from Dunn & Bradstreet, 2002.

B. Potential Cost Savings (Benefits) of the Standard

In the preamble to the proposed standard, the Agency presented a model of VTL operations that described the productivity and cost savings of VTLs of two empty containers (68 FR 54308–11). The Agency identified several sources of cost saving, all of which resulted from loading and unloading two empty containers in less time using VTLs. The sources of cost savings included less longshoring employee time, less crane rental time, less dock rental time, and less total time for the ship to be idle in port. (Higher efficiencies also affect terminal and port capacity, an issue that is discussed below, but not one that directly bears on the standard's impact on employers.) The model estimated the time saved—about 4 hours—in loading or unloading one-third of 1,000 above-deck containers on a 3,000-container vessel. [The average container ship capacity was about 3,200 20-foot containers in 2004, increasing from about 2,800 in 2001 (U.S. Maritime Administration, ''Containership Market Indicators,'' 2005).] In the Agency's model, moving empty containers singly resulted in 30 containers moved per hour; moving 2 containers in a VTL moved 45 per hour; and moving 3 containers in a VTL resulted in an estimated 55 moved per hour. In OSHA's model, overall cost savings from transporting VTLs between a typical ship and shore were $3,245-plus almost 4 hours saved in idle vessel time and port rental charges. The Agency is not presenting the full model again here because it was illustrative of a positive productivity effect.

In the Preliminary Economic Analysis, employers with stevedore operations were estimated to have annualized compliance costs of $4,000 (68 FR 54313) to perform VTLs in compliance with the proposal. The Agency received no comment on this figure and concludes that it is a reasonable estimate of the annual costs. The expected cost savings of using VTLs on a single vessel are then nearly equal to employers' estimated annual compliance costs of performing VTLs.

To estimate overall cost savings from performing VTLs (benefits due to the final standard), the Agency would need both an estimate of the cost savings per ship and the number of ships that will be loaded via VTLs. The Agency's model and testimony in the record on the productivity gain of VTLs (discussed below) provide an estimate of the cost saving per ship. But the Agency cannot predict well how many ships will have empty containers loaded as VTLs. For example, most of the containers loaded onto ships at West Coast ports today are empties, but no VTLs are currently performed there, even though permitted by a letter of interpretation from the Agency. In addition, changing trade flows between the U.S. and other countries continually alter the relative number of empty containers loaded on and off ships. If trade were perfectly

evenly balanced between the U.S. and its trading partners, by port, there would be little transport of empty containers. In contrast, a few years ago as much as two-thirds of all outbound containers from West Coast ports were empties; whereas today the fraction has fallen to one-half (see for example, *http://www.portoflosangeles.org/maritime/stats.org*). If promulgation of the final standard results in an increase in VTLs, these benefits could properly be attributed to the final standard. The Agency can say with some certainty that it expects cost savings of VTLs to exceed employer costs, but cannot present an exact estimate of how the affected industries will respond to the final standard, which only permits and does not require VTLs of empty containers.

Many commenters to the record reported that there is increased productivity (time saved) from moving containers via VTLs (for example, Exs. 47–5, 50–9–1, 54–3, 54–14, 1998–Tr. 125, 139, 179, 209; Tr. 2–77, 2–99). Most commenters did not provide a quantitative measure of the economic savings from VTLs.

James MacDonald of Maher Terminals said that on a weekly basis when lifting 2,200 containers as VTLs, or 10 percent of all lifts, ''overall productivity will increase by more than 1.0 container lifts per hour [and] a single container per hour increase in productivity can improve a vessel's dispatch time by 3 or 4 hours'' (Ex. 50–9–1). In oral testimony Joseph Curto, representing the National Maritime Safety Association, said:

> Let's say the crane is doing 25 lifts an hour as normal service, and in a VTL, you are doing 20 lifts per hour, because it is a little slower. So you had a reduction in the number of crane cycles, maybe by 20 percent, but you are now lifting containers at a rate of 40 an hour, versus 25 an hour, which is an increase of 40 percent. [Tr. 2–178]

Bill Williams, also representing NMSA, said:

> [I]t is generally agreed that there is about an eight percent improvement [overall] in productivity by doing vertical tandem lifts * * * the ports that do VTLs on the East Coast generally have moves per hours of 40–plus per terminal, per crane. This is compared to 30 moves an hour on the West Coast where they're not done. That's a significant difference in productivity. [Tr. 2–177]

These estimates are broadly consistent with the estimates of OSHA's model for productivity improvements associated with the use of VTLs. OSHA estimated about a 4-hour improvement in ships' dispatch times. Mr. MacDonald of Maher Terminals estimated 3 to 4 hours. Mr. Williams of Maersk noted an improvement in the number of containers transported from 30 each hour with single-box lifts to 40 per hour via VTLs. OSHA's model estimated an improvement in rate from 30 to 45 per hour.

Several commenters asserted that VTLs have not been performed following all the safety steps outlined in the ''Gurnham letter'' (Exs. 10–9, 43–10). One commenter also noted that it is not feasible or possible to follow all of the steps (Ex. 43–10–3). Two commenters, for example, concluded that if all the required safety steps were followed there would be no increase in productivity (Exs. 10–9, 50–7).

In comments to the rulemaking record, many employers and experts reported that VTLs are currently being performed and have been for many years (for example, Exs. 47–5, 50–9–1, 50–13, 54–3, 54–14; 1998–Tr. 209). The Agency believes that this is clear evidence that, overall, VTL operations result in cost-saving to stevedores and shippers, or in regulatory terms, that the economic benefits exceed compliance costs, resulting in a net benefit. Ultimately, this cost saving will lower the costs of transport, and therefore presumably prices to consumers. The cost savings directly reduce shippers' costs. There are other likely economic effects. When capital (ships, ports, and terminal facilities as well as cranes) is used more intensively or productively, economic theory predicts that this will result in a larger return to capital. Likewise, when labor productivity increases, as it does here, wages are also predicted to increase in standard economic models of competition. The Agency has not estimated or quantified any change in transportation costs, consumer prices, wages, or return on capital.

In summary, both OSHA's model and industry experience show that the standard has the potential to save shippers' costs by reducing the time necessary for transporting empty containers. Further, in situations when VTLs are not advantageous, the employer need not use them and will not incur any of the associated costs of the standard.

The Agency can estimate the range of potential benefits of employing VTLs. Currently, as described below, the Agency believes that on the East and Gulf Coasts about 165,000 VTLs are performed annually. Based on the Agency's model, this would generate about $3.2 million in cost saving [(165,000 VTLs/166.5 VTLs per ship) x $3,245 cost saving per ship). This estimate does not include savings in crane rental time, dock rental fees, port charges, idle ship time, or other sources. It is based on one-third of 1,000 above-deck containers being moved as VTLs. It is worth noting that if all above-deck containers are empty, and moved as VTLs, the estimated cost saving per ship is nearly $10,000, or about three times more than estimated by OSHA's model.

As a measure of the potential impact of the final standard, if West Coast ports began moving empty containers as VTLs there could be substantial benefit. The busiest West Coast ports (Los Angeles/Long Beach, San Francisco, Seattle, and Tacoma) have about 6,500 container vessel calls each year (U.S. Maritime Administration, ''Vessel Calls at U.S. Ports, Snapshot, 2006''). In addition, these West Coast ports import over 10 million loaded 20-foot equivalent units (TEUs) from Asian destinations while exporting about 4 million (U.S. Maritime Administration, ''Container Ship Market Indicators, August, 2005''). Over one-half of containers are now transported by ''Post-Panamax'' container ships, which have capacities over 4,000 TEUs. Where in 2001 there were 331 such vessels representing about 30 percent of total world containership capacity, by 2007 Post-Panamax-size ships constitute over one-half of world containership capacity (''Containership Market Indicators,'' U.S. Maritime Administration). Clearly, there are both the means to carry large numbers of empty containers on deck from West Coast ports as well as large numbers to carry. If only about one-half of current exported empty containers are carried above deck, the potential savings are about $30 million annually (3 million empty containers multiplied by about $10 saved per container). Again, these cost savings do not include savings from other sources (idle ship time, port charges, crane rental time, etc.).

C. Potential Costs of the Standard in the Form of Increased Safety Risk

OSHA has determined that, with full compliance under the final rule, no future injuries or fatalities are expected to occur while performing VTLs, and thus has not included such costs in this analysis. As explained elsewhere in this preamble, the final rule is more protective than current practice under the Gurnham and Matson letters, and OSHA believes that by promulgating a VTL regulation, employers will comply with OSHA's more protective and safer VTL requirements. Also the record shows that employers have engaged in a substantial number of VTLs under the Gurnham and Matson letters, and only a few reported incidents—and no deaths or injuries resulting from them. As explained elsewhere in this preamble,

OSHA believes these incidents are evidence of the risks of unregulated VTLs, and support, along with other evidence in the record, the final rule. OSHA believes that these incidents would have been avoided, or at least presented little threat to workers, had the practices required by the final rule been followed.

Several commenters said that VTLs are unsafe, arguing that the number of VTLs attempted is small relative to the number of containers lifted singly each year—and therefore constitute too small a sample to evaluate the relative safety, or risk, of VTLs. For example, one commenter said that ''the amount of vertical tandem lifts made thus far is statistically insignificant'' (Ex. 43–20–3). Tests of statistical significance are based on sample size and require a hypothesis (parameter value) to be tested as well as statistical assumptions about distributions to be a meaningful statement; thus the Agency cannot evaluate this claim of (a lack of) significance. Several commenters also compared the number of VTLs performed to the total number of containers transported each year (currently about 25 million TEUs), suggesting that the number of containers transported as VTLs is too small to judge the relative safety—or risk—of VTLs.

The number of VTLs performed since 1986 is substantial in absolute terms. Several commenters reported on the number of VTLs performed by their companies:

- APM Terminals (Exs. 30–13–1, 50–13). In 2003, more than 60,000 VTLs. Since 1998, more than 380,000 VTLs.
- Maher Terminal, Port of New York (Ex. 50–9–1). In 2003, performing 250 VTLs per week, or about 12,500 per year, soon to increase to 1,100 per week.
- Michael Bohlman (Horizon Lines including former Sea-Land, Ex. 54–3). ''[W]e have the operational experience of lifting hundreds of thousands of vertically coupled containers.'' Sea-Land reported performing over 250,000 VTLs in OSHA's one-day public hearing (1998–Tr. 179) and about 50,000 VTLs per year (Ex. 11–7C).
- Richard Buonocore, Matson (1998–Tr. 169). In 1998 Matson reported performing 47,000 VTLs since 1986 between Oakland and Honolulu, although this practice apparently ended some years ago.
- Tropical Shipping and Birdsall (Ex. 54–14). More than 20,000 VTLs within the past four years (up to 2004), or about 5,000 VTLs per year.

Based on this information, the Agency estimates that these companies are performing about 165,000 VTLs annually. Other commenters reported that they are performing VTLs, but did not provide any data on the number performed. VTLs are currently performed in the U.S. only at ports on the East and Gulf Coasts (Tr. 2–232). Table 3 presents data about container traffic in East and Gulf Coast ports in TEUs for 2006, including exports, imports, and net exports. Large discrepancies in net exports, whether positive (exports greater than imports) or negative, indicate possible flows of empty containers in the opposite direction. For example, Maher Terminals (Tr. 2–81, 2–97, 2–103) reported large numbers of VTLs, and comment in the record indicated that these VTLs largely consisted of loading empty containers onto ships, as the number of loaded, imported containers is much greater than that of loaded containers for export in the ports of New York/New Jersey (Table 3). However, net exports from Gulf and southern East Coast ports are often positive, suggesting that these ports have significant numbers of empty containers returning on inbound ships. Even when a port has a significant difference between the number of loaded containers inbound and outbound, there are usually empty containers being returned in the unexpected direction. For example, in 2004 the Port of Seattle exported over 800,000 TEUs and imported about 500,000 (Port of Seattle, Internal Statistics). The port reported loading 250,000 empty containers outbound, as one would expect, but still had almost 60,000 empty TEUs arrive for unloading as well.

The Agency concludes that, although some employers performing VTLs presented specific estimates for their companies in the rulemaking, it is likely that there are other stevedores moving empty containers as VTLs in the same ports. The Agency concludes that a reasonable estimate of the number of VTLs performed since Matson began the practice in 1986 and since the Agency's ''Gurnham letter'' in 1993 is approximately one million VTLs. To put this in TEU units, a VTL of two 20-foot-long containers has two TEUs and a VTL of two 40-foot containers has four TEUs. Based on a simple assumption that about one-half of VTLs are done in each size category, the Agency estimates that the average VTL is moving three TEUs. The Agency therefore estimates that, using the metric of TEUs, VTLs have moved about 3 million TEUs. The historical total of VTLs (since 1986) is thus about 12 percent of the current annual transport of intermodal containers (about 25 million TEUs in 2005), and the Agency concludes that this is a sufficient sample with which to evaluate the safety, or risk, of VTLs.

A review of fatality-catastrophe data in OSHA's IMIS database reveals that at least 25 fatalities have occurred in the marine cargo handling industries while moving single (loaded as well as empty) containers via cranes since 1996. In these data, there are also 15 formal reports of injuries during these operations. In most cases, longshoremen are knocked off of heights by containers or spreader beams, crushed by containers in the holds of ships, or crushed by a container lowered onto the dock or ship. In addition, longshoremen have been killed even when single, empty containers have dropped from a gantry crane's spreader beams (59 FR 28596). In an extensive benefits analysis for the Agency's comprehensive overhaul of its longshoring and marine terminals standard in 1997, the Agency estimated that there were about 18 fatalities occurring annually in the industry (62 FR 40190). Most of these resulted from ''traffic'' accidents within terminals, falls from containers, and accidents involving container equipment within the terminal. In terms of the relative risk within the industry, VTLs appear to be a safer operation than other longshoring activities. Similarly, compared to risks of transporting single containers, whether containers are loaded or unloaded, the number of VTLs is sufficient to conclude that it is a relatively safe procedure. The Agency therefore has determined that there is sufficient evidence (number of VTLs) to conclude that (full compliance with) the final standard permitting VTLs will not result in any additional expected fatalities.

Commenters also said that the ''small'' sample reported of VTLs was further flawed:

> In addition, maritime industry employers never fully complied with the minimal requirements set forth in the Gurnham Letter. Non-observance was due, in part, to the fact that compliance with all eight requirements was not even feasible. * * * Thus, it is clear that even under the wide latitude granted to employers by the Gurnham Letter, employers have been requiring workers to perform inherently unsafe VTL operations outside OSHA's restrictions with impunity * * * As such the ''industry experience'' upon which OSHA heavily relies is wholly flawed and cannot serve as a legitimate basis to support the proposed rule. [Ex. 43–10] * * *

Presumably ignoring OSHA-required safety precautions would have resulted in VTLs of greater risk. However, since few accidents have been reported and there have been no employee injuries, drawing conclusions of safe outcomes

from a riskier than expected sample only argues more strongly in favor of the safety of VTLs under the final standard.

Some commenters said that VTLs are performed widely around the world (Exs. 100–X, 101–X, 102–X, 103–X). However, when commenters were asked to identify specific countries and ports only a few were named (Italy, Spain, Singapore and ports in the Far East, Tr. 1–159). There were comments and testimony in the record that VTLs are not performed in Singapore, Rotterdam (Netherlands), Belgium, Russia, Canada, and Japan (Ex. 62, Tr. 2–285, 2–295).

The Agency concludes that given the number of VTLs performed with no resultant injuries, the additional protections provided by the final rule, and increased compliance following its promulgation, the Agency can reasonably conclude that operations under the final standard (that is, in full compliance) can be expected to avoid injury to longshore workers.

TABLE 3—U.S. WATERBORNE CONTAINER TRAFFIC BY U.S. CUSTOM PORTS

[East Coast and Gulf Ports (TEU's)]

U.S. Custom Ports	2006 exports	2006 imports	Exports less imports
New York, NY	1,049,918	2,578,829	(1,528,911)
Savannah, GA	718,647	862,278	(143,631)
Charleston, SC	618.095	875,190	(257,096)
Houston, TX	613,999	654,165	(40,166)
Norfolk, VA	579,728	830,005	(250,277)
Port Everglades, FL	338,603	295,627	42,976
Miami, FL	315,594	427,761	(112,167)
Baltimore, MD	150,244	253,088	(102,844)
West Palm Beach, FL	115,959	33,223	82,737
Jacksonville, FL	103,906	47,922	55,984
New Orleans, LA	102,094	68,104	33,990
Gulfport, MS	64,392	97,213	(32,821)
Boston, MA	60,228	78,877	(18,649)
San Juan, PR	55,726	151,788	(96,062)
Wilmington, NC	47,666	79,212	(31,546)
Chester, PA	45,641	50,727	(5,087)
Wilmington, DE	43,862	126,168	(82,306)
Newport News, VA	30,431	43,127	(12,696)
Anchorage, AK	28,231	120	28,110
Freeport, TX	27,982	26,662	1,320
Philadelphia, PA	27,811	152,331	(124,521)
Honolulu, HI	26,876	24,367	2,508
Panama City, FL	22,272	21,885	387
Mobile, AL	19,177	24,541	(5,364)
Richmong-Petersburg, VA	17,766	20,523	(2,757)
Mayaguez, PR	11,797	14,863	(3,066)
Fernandina Beach, FL	11,137	7,480	3,657
Camden, NJ	9,097	971	8,126
Tampa, FL	5,347	10,592	(5,245)
Fort Pierce, FL	2,194	1,423	771
Galveston, TX	1,726	6,335	(4,608)
Kodiak, AK	1,014	4,684	(3,671)

Source: Dept. of Transportation, Maritime Administration, ''U.S. Waterborne foreign Container Trade by U.S. Custom Ports, 1997–2006.'' at *http://www.marad.dog.gov/MARAD1statistics.*

D. Other Costs of the Final Standard

In its proposed standard the Agency had required a visual inspection of interbox connectors before each use (§ 1917.71(f)(3)(l)(iv)). In the final standard, the inspection immediately before each use must include a check of each connector's ''physical operation to determine that the lock is fully functional with adequate spring tension on each head,'' as well as other checks for corrosion and structural defects. Such inspections cannot be performed while the interbox connectors are attached to the containers. Thus, an individual inspection of the *operation* of interbox connectors before each use in a VTL is likely to make the discharge of VTLs from the decks of ships impractical, the Agency concludes. Each empty (top) container potentially used in a VTL would have to be raised and its four connectors removed for inspection. The connectors would have to be re-inserted in the bottom corners and the container raised by the crane and vertically coupled to another empty container to make up the VTL. This activity would have to be carried out by longshoremen working either on the deck of the ship, on a ship's hatch cover, or up on the stacks of empty containers. Working at heights puts longshoremen at increased risk of falls, and, in any event, this inspection would add so much time to the transport of empty containers as to likely save little time, or even be slower, than lifting single containers, the Agency concludes, thereby eliminating any potential productivity benefit.

Thus, employers who currently discharge empty containers from ship to shore may suffer a productivity loss under the final standard. Such affected employers would be found on the East Coast and Gulf Coast, as VTLs are not performed on the West Coast. Several commenters to the record noted that they are performing VTLs as discharges from ships (Exs. 50–13, 50–13–1, 54–14, 58; Tr. 1–291—1–307, 2–106).

Table 3 presents information about exports and imports of containers from these ports (East and Gulf Coasts). Ports that have substantial numbers of net container exports—more than 10,000 per year, the Agency estimates—would likely have sufficient ships returning

with enough empty containers that are now unloaded as VTLs. The right-most column in Table 3 identifies ports with such numbers of positive net exports. For example, Port Everglades, Florida, exports about 43,000 more TEUs than it unloads as imports, and so long as most containers return via the same shipping route, the Agency believes stevedores would likely unload some of these as VTLs. (However, as explained above, even ports with large net imports also import some empty containers.)

As can be seen in Table 3, there are a total of about 215,000 more exported, loaded TEUs from Gulf and East Coast ports than are imported, and thus could be currently unloaded from container ships as VTLs. Some of the companies that reported specific numbers of VTLs, noted above in this final economic analysis, currently operate from southern ports with more than 10,000 TEUs of annual net exports (such as Birdsall, Horizon, APM). Not all returning empty containers will be transported as VTLs. If there are relatively few empty containers on a smaller vessel, it is unlikely that normal discharge operations of single, empty containers would change to a different mode of operations in the terminal. Also, empty containers stored below decks cannot be transported as VTLs because they are not coupled together with interbox connectors. Based on an assumption that one-third of the current returning empties may be moved as VTLs, the Agency estimates that about 70,000 per year are moved as VTLs from ship to shore. The Agency estimates that the productivity loss of moving these containers as single lifts to be about $700,000 annually. (In its estimate of the productivity benefit of moving VTLs above, the Agency estimated that moving 333 empty containers as VTLs would result in a saving of $3,245, or about $10 saving per container.)

This dollar total represents additional stevedoring costs that the Agency believes must be charged to shipping lines, or absorbed by carriers if they unload their own ships, and eventually to consumers. The Agency does not expect the additional costs of only being able to lift empty containers one at a time off of ships' decks will significantly impact any stevedore's revenues or profits. Since unloading empty containers as VTLs cannot be performed at other U.S. ports or by other stevedores, the Agency does not believe the competitive structure or balance of stevedore employers will be affected.

E. Technological and Economic Feasibility

The final standard sets many conditions that must be met for VTLs to be performed safely, including requirements for: employee training, limits on wind speeds, type of crane, interbox connectors' strength and locking mechanisms, inspections of connectors and container corner castings, and a plan for handling VTLs on shore. Because all of these conditions can be met by stevedores, and in fact most are being met where VTLs are currently being performed, the Agency has determined that the final standard is technologically feasible. Similarly, the Agency's estimates of compliance costs and benefits show that there is a net economic benefit to VTLs, which is confirmed by the current (voluntary) VTL activity in several ports. As Ralph Cox of Massport put it: ''The practice must be cost effective as it has been utilized since 1993'' (Ex. 10–9, emphasis in original). Because there are positive net benefits to VTLs, the Agency therefore concludes that the final standard as it applies to VTLs of two empty containers is economically feasible. However, even if costs exceeded benefits, the practice would not be economically infeasible since the standard only permits but does not require VTLs.

The final standard does not impose any net compliance costs on any small employer. The Agency certifies that the final standard does not substantially impact a significant number of small entities.

F. An Alternative to the Final Standard: VTLs of Three Tiers of Containers

Since the Agency first considered a standard for VTLs, immediately after the comprehensive marine terminal and longshoring standards were promulgated in 1997, one aspect of the VTL issue has changed. In 1997 and 1998 the primary focus of VTLs was lifting two empty or partially loaded containers (see for example, comments from the National Maritime Safety Association Ex.10–8). In a one-day public hearing on the issue of VTLs on January 17, 1998, the subject of lifting more than two containers in a VTL did not arise (1998–Tr.). However, based on the comments received during the rulemaking from shippers and stevedores, they believe that restricting VTLs to only two containers limits the economic advantages of VTLs (Ex. 47–5; Tr. 1–102, 1–104).

Many stevedores and shippers reported in the record that VTLs of three containers are being performed (Tr. 2–98, 2–103). However, there was considerable comment in the record that West Coast ports are not performing any VTLs, of even two empty containers (Tr. 2–232). Michael Bohlman reported that his company had performed many thousands of VTLs: ''Double, triple, and even quadruple couplings have been made'' (Ex. 54–3). However, VTLs of more than two containers have apparently only been performed abroad. Mr. Bohlman says later that ''the only sanctioned VTL operations in this country are limited to two tiers so there is no recent history of performing VTLs with three tiers in the U.S.'' Comments of the International Longshore and Warehouse Union suggested that there is anecdotal information that three- and four-container lifts have been performed at some U.S. ports (Ex. 43–10).

Greater productivity gains are claimed for VTLs of three containers compared to those of two containers. In operations abroad, Mr. Bohlman commented that ''time and motion studies convinced us that a 3-tier VTL unit is actually more efficient unit to handle that a 4-tier VTL * * *. We do not wish to lose the efficiency of a 3-tier VTL unit'' (Ex. 54–3). And later he added ''We considered the operational efficiencies of the four-tier unit versus the three-tier or two-tier unit * * * and from an operational perspective, three made sense and four really didn't'' (Tr. 1–118, 1–119). Another commenter noted that it was actually faster to lift four empty stacked containers in two lifts of two containers each rather than a single life of four containers (Ex. 54–3). A number of commenters said that VTLs of three and four tiers are performed abroad and also said that handling three containers in a VTL is apparently the optimum (Tr. 1–109, 1–118, 1–119). ISO also recognized that there is ''a practical upper limit of three vertically-coupled containers'' (ISO 3874 section 6.2.5).

As discussed earlier in this preamble, the Agency has concluded based on the ultimate strength of interbox connectors and a safety factor of five, that VTLs of only two empty containers is a safe operation, but one of three or more empty containers is not [based on interbox connectors with a safe working load of 10,000 kg—§ 1917.71(i)(7)(v)]. To the extent that VTLs of three containers are presently being performed domestically, the restriction to two empty containers would impact productivity. The Agency believes that the information in the record indicates that there are today few if any VTLs at U.S. ports of more than two tiers of containers. The Agency concludes that there is no significant loss in productivity (which would be

essentially a cost of the final standard) from current practices to limiting VTLs to two containers.

Nevertheless, limiting VTLs to two containers might prevent taking advantage of potential productivity gains not now enjoyed. The potential future loss in productivity is measured by the difference in productivity gains from two-container VTLs and three-container VTLs. There was little information in the rulemaking record quantifying the productivity gain of VTLs with two containers, and none at all of three-container VTLs. OSHA's model in the PEA describes a reduction in time per box moved of 33 percent when two containers are lifted in a VTL compared to single lifts. For three-container lifts, the model predicts an additional 18 percent reduction in time per box relative to two-container VTLs (68 FR 54311, Table 4b—Productivity Gains). These percentages are only for moving empty, above-deck containers and are not overall increases in the time saved in ship loading and unloading. (OSHA's model in the PEA however predicts further efficiency gains, or savings in time, with four- and five-container VTLs. As noted earlier, four-container VTLs were said by commenters to be slower than lifting via two two-container VTLs; so OSHA's model is inaccurate for VTLs of more than three containers.) The Agency believes based both upon its model and the testimony in the record that there is substantial cost savings with two-container VTLs and additional but less time saved per container with three-container VTLs.

The actual amount of time saved by three-container VTLs depends on many factors. For example, stevedores could potentially need different equipment for making up or breaking down three-container VTLs. Three-container VTLs would be more susceptible to being limited by wind speeds. The time saved is also a function of the ship's stowage plan. For example, if loading or unloading a ship with four-high stacks of empty containers on deck, there is little advantage to three-container VTLs over two-container lifts since two lifts are required in either case. If containers were stacked five high, there would be two lifts if three-container VTLs were allowed, but three lifts if only two-container VTLs were permitted.

Without information about either the actual average efficiency gain of three-container VTLs or the number that might be performed, the Agency cannot quantify this potential productivity gain. But the productivity gain is surely less, as a percentage, than that of two-container VTLs relative to single container lifts. Nor has the Agency calculated the expected number of injuries and deaths that might occur while making three-container lifts. But the Agency has made a determination that there is a significant risk that accidents and injury will occur with three-container lifts since such lifts would exceed the safe working load of (existing) interbox connector-corner casting assemblies. The Agency's evaluation of even riskier four-container lifts and industry's report that these are not practical are consistent in concluding that this is an undesirable procedure.

G. A Barrier to Trade

Several commenters said that OSHA's failure to permit more than two-container VTLs constitutes a barrier to trade—because this will limit productivity gains in handling intermodal containers (for example, Ex. 47–5). In general, a non-tariff barrier to trade is a rule that favors domestic over foreign production, particularly one applied selectively so that the rule imposes costs on foreign companies but not domestic producers. Rules that are actually necessary to achieve cost-effective safety or health measures are not generally considered barriers to trade—though it is widely recognized that safety or health rules that are cost ineffective but favor domestic producers may be barriers to trade.

The Agency believes the following facts are pertinent to claims that an occupational safety standard for VTLs is a barrier to trade:

- The United States is both the world's largest importer of goods as well as the largest exporter of manufactures.
- The final standard's safety measures apply to both foreign imports and U.S. exports without discrimination.
- The final standard also applies to containers that are shipped between domestic U.S. ports, including Hawaii and Puerto Rico.
- The limit on the number of containers in a VTL is not an artificial one designed to favor some shipper over others with no effect on safety—which would be characteristic of a barrier—but based on statutory criteria in the OSH Act.
- The ICHCA guidelines, which shippers, ports, and cargo handlers have urged OSHA to adopt, includes the following—ICHCA Guidelines 8.1.1.3: ''VTL operations should only be carried out if the domestic legislation of the country in which they are to be carried out permits such operations under appropriate conditions.''
- OSHA currently permits VTLs of two containers, but the cargo transportation industry does not perform two-container VTLs on the West Coast ports.

The claim that a safety standard for longshore employees, limiting VTLs to two containers, constitutes a barrier to trade seems to be without merit in any economic sense. Related issues about compatibility with international treaties have been discussed earlier in this preamble.

H. Congestion, Competitiveness, and Productivity Necessity

Several commenters raised issues about the final standard's effect on the competitiveness of ports and cargo-handling industries and the impact of productivity on the affected industries. For example, NMSA stated that: ''The utilization of VTLs is an absolute necessity if U.S. ports are going to remain competitive given projections for domestic cargo growth'' (Ex. 50–9–1).

When a ship's containers can be loaded and unloaded faster, it benefits the vessel owner/shipper engaged in cargo transport. It reduces the time the vessel, and crew, remain idle in port. Potentially, it also reduces the cost—ultimately born by the shipper—in dock rental, crane rental, and amount of time the longshoremen need to move the containers. The stevedore and longshore workers may or may not benefit economically from a more efficient arrangement. When the volume of container traffic becomes so large that ships must sit idle at anchor, and may therefore be forced to go to less optimal ports, then ports, marine terminals, and stevedores may lose business. This is the situation at peak periods of cargo traffic at U.S. ports today, and explains why carriers, ports, marine terminals, and stevedores all seek greater capacity at ports. Capacity is the rate at which containers can be moved back and forth between vessel and land destinations; that is, through the marine terminal. Carriers are always interested in faster loading and unloading; ports and the cargo handling industry join in the pursuit of this goal as congestion (or ships' waiting time) grows. One commenter recounted how congestion, caused by a shortage of labor at a California port, had resulted in ships being diverted to a Mexican port for unloading (Tr. 2–76).

Congestion results when port capacity and the distribution network are overwhelmed by the number of containers to be transported. The congestion results from the extraordinary growth of international trade and concomitant number of containers to be transported. Commenters described a number of

infrastructure causes for congestion, including limitations of bridges and roads, environmental issues, dock space and crane availability, and labor shortages (Tr. 1–73, 1–75, 1–76, 1–140, 1–141). The container-moving industries have considerably increased capacity in the past decade, but have not yet caught up with the growth of trade—or its expected continued growth.

The ability of VTLs to speed the transport of containers between ship and shore provides one source of productivity to increase capacity. However, any increase in the rate of moving containers between ship and shore would have to be matched by the ability of other modes of transport in and out of the terminal. If the limiting factor is truck or rail transport, then increasing the speed of unloading vessels would still have benefits, but would not relieve congestion:

> It has been announced in many shipping journals that the increased volume in container traffic is exceeding the capacity of the rail and road infrastructures around the world. Vertical Tandem Lifts will not alleviate that problem. * * * VTLs may be economically beneficial to the shipping lines, but are no real gain for the terminals, railroads or trucking industry, or more importantly, the customer. [Ex. 50–7]

The ''competitiveness'' issue raised by commenters is really one of capacity, the Agency believes. Commenters did not suggest that other ports or marine terminals could provide services at lower prices because they would be able to employ larger units of VTLs. Rather the concern seems to be losing business simply because U.S. ports cannot accommodate the volume of container traffic (Tr. 2–75—2–80). Commenters did not provide any evidence to support a claim that they are at an economic disadvantage. The only realistic alternatives to moving sea-going commerce through American ports are Canadian or Mexican ports. Canadian ports do not perform VTLs on either coast (Tr. 2 295), and they therefore cannot offer any cost or time saving relative to U.S. ports. Transporting containers via Mexican ports adds greater distances for containers to reach U.S. destinations and an additional border to cross. There was no evidence in the record that transporting containers through Mexican ports lowers the cost of transport, that the diversion of ships there was due to the use of VTL operations in Mexico, or that VTLs are performed in Mexico.

Since marine terminals and the cargo-handling industry at West Coast ports do not perform two-container VTLs, as they presently are permitted to do by OSHA policy, the Agency is unsure what the industry means when it says that VTLs are a ''productivity necessity'' while still arguing that the Agency should permit larger VTLs of three containers in its final standard (Ex. 47–5). The Agency can well see that the cargo-handling industries must continue to find ways to increase capacity or more cargo will be diverted to other ports, and that VTLs can provide a part of that productivity improvement. But in response to the assertion that OSHA cannot impede a productivity necessity (Ex. 50–9–1)—the Agency can through the OSH Act constrain efficiencies and productive actions by employers if necessary to avoid a significant risk of injury and death to employees.

VII. Environmental Impact

Finding of No Significant Impact. OSHA has reviewed the final rule according to the requirements of the National Environmental Policy Act (NEPA) of 1969 (42 U.S.C. 4321 *et seq.*), the regulations of the Council on Environmental Quality (40 CFR parts 1500 through 1517), and the Department of Labor's (DOL) NEPA Procedures (29 CFR part 11). Based on this review, the Assistant Secretary for OSHA finds that the rule will have no significant environmental impact.

The revisions and additions to 29 CFR Parts 1917 and 1918 focus on the reduction of employee death and injury. OSHA will achieve this reduction through the updating of its standards for longshoring and marine terminal operations to provide safe work practices for employers who choose to perform VTLs. The new language of these rules does not affect air, water, or soil quality, plant or animal life, the use of land, or other aspects of the environment. Therefore, the new rules are categorized as ''excluded actions'' according to § 11.10(a)(1) of the DOL NEPA regulations.

VIII. Federalism

OSHA has reviewed this final rule in accordance with the Executive Order on Federalism (Executive Order 13132, 64 FR 43255, August 10, 1999), which requires that federal agencies, to the extent possible, refrain from limiting State policy options, consult with States prior to taking any actions that would restrict State policy options, and take such actions only when there is clear constitutional authority and the presence of a problem of national scope. Executive Order 13132 provides for preemption of State law only if there is a clear congressional intent for the Agency to do so. Any such preemption is to be limited to the extent possible.

Section 18 of the OSH Act (29 U.S.C. 651 *et seq.*) expresses Congress' intent to preempt State laws where OSHA has promulgated occupational safety and health standards. Under the OSH Act, a State can avoid preemption on issues covered by federal standards only if it submits, and obtains federal approval of, a plan for the development of such standards and their enforcement (State plan State) (29 U.S.C. 667). Occupational safety and health standards developed by such State plan States must, among other things, be at least as effective in providing safe and healthful employment and places of employment as the Federal standards. Subject to these requirements, State plan States are free to develop and enforce under State law their own requirements for safety and health standards.

This final rule complies with Executive Order 13132. As Congress has expressed a clear intent for OSHA standards to preempt State job safety and health rules in areas addressed by OSHA standards in States without OSHA-approved State plans, this rule limits State policy options in the same manner as all OSHA standards. In States with OSHA-approved State plans, this action does not significantly limit State policy options.

IX. Unfunded Mandates

This final rule has been reviewed in accordance with the Unfunded Mandates Reform Act of 1995 (UMRA) (2 U.S.C. 1501 *et seq.*) and Executive Order 12875. As discussed in the Final Economic and Regulatory Flexibility Analysis, OSHA estimates that compliance with the rule will require expenditures of less than $100 million per year by affected employers. Therefore, this rule is not a significant regulatory action within the meaning of Section 202 of UMRA (Pub. L. 104–4, 2 U.S.C. 1532). OSHA standards do not apply to State and local governments except in States that have voluntarily elected to adopt an OSHA State plan. Consequently, the rule does not meet the definition of a ''Federal intergovernmental mandate'' (Section 421(5) of UMRA) (2 U.S.C. 658).

X. Office of Management and Budget Review Under the Paperwork Reduction Act of 1995

The final rule on VTLs contains a collection of information (paperwork) requirement that is subject to review by the Office of Management and Budget (OMB) under the Paperwork Reduction Act of 1995 (PRA–95), 44 U.S.C. 3501 *et seq.*, and OMB's regulations at 5 CFR part 1320. PRA–95 defines ''collection

of information'' as ''the obtaining, causing to be obtained, soliciting, or requiring the disclosure to third parties or the public of facts or opinions by or for an agency regardless of form or format * * *'' (44 U.S.C. 3502(3)(A)). The collection of information requirements contained in the proposed VTLs was submitted to OMB on September 12, 2003.

The Department submitted an Information Collection Request (ICR) to OMB for its request of a new information collection. OMB approved the ICR on November 24, 2008, under OMB Control Number 1218–0260, which will expire on November 30, 2011.

The Department notes that a Federal agency cannot conduct or sponsor a collection of information unless it is approved by OMB under the PRA, and displays a currently valid OMB control number, and the public is not required to respond to a collection of information unless it displays a currently valid OMB control number. Also, notwithstanding any other provision of law, no person shall be subject to penalty for failing to comply with a collection of information if the collection of information does not display a currently valid OMB control number.

In the NPRM OSHA proposed that employers rely on the vessel's cargo stowage plan for the location and characteristics (weight and content) of the VTL units being handled and to provide a copy of the plan to the crane operator. Based on the rulemaking record, OSHA has concluded that this requirement is unnecessary (see the discussion of the proposed stowage plan requirement in section V.H. 4., Stowage plan, earlier in this preamble).

The final VTL Standard contains one collection of information requirement. Paragraph (j)(2) of § 1917.71 requires the employer to develop, implement, and maintain a written plan for transporting vertically connected containers in the terminal. The transport plan helps ensure the safety of terminal employees and enhances productivity. Paragraph (k)(2) of § 1917.71 requires that the written transport plan include the safe work zone and procedures to ensure that employees are not in the zone when a VTL is in motion. The Agency did receive public comments favoring the written plan. A full discussion of the written plan may be found in section V.E., Coordinated transportation, earlier in this preamble.

The final ICR estimates that 20 establishments will take 4 hours to develop the written plan totaling 80 hours. The burden hour cost to establishments for developing the written plan is $4,951. There are no capital costs for this collection of information requirement.

XI. State Plan Requirements

This **Federal Register** document issues final rules addressing the handling of VTLs in marine cargo handling regulated in 29 CFR Parts 1917 and 1918. The 26 States or U.S. Territories with their own OSHA approved occupational safety and health plans must develop comparable standards applicable to both the private and public (State and local government employees) sectors within 6 months of the publication date of a final Federal rule or show OSHA why there is no need for action, for example, because an existing State standard covering this area is already ''at least as effective as'' the new Federal standard. Three States and territories cover only the public sector (Connecticut, New York, and New Jersey).

Currently four States (California, Minnesota, Vermont, and Washington) with their own State plans cover private sector onshore maritime activities. Federal OSHA enforces maritime standards offshore in all States and provides onshore coverage of maritime activities in Federal OSHA States and in the following State Plan States: Alaska, Arizona, Connecticut (plan covers only State and local government employees), Hawaii, Indiana, Iowa, Kentucky, Maryland, Michigan, Minnesota, Nevada, New Jersey (plan covers only State and local government employees), New Mexico, New York (plan covers only State and local government employees), North Carolina, Oregon, Puerto Rico, South Carolina, Tennessee, Utah, Virginia, Virgin Islands, Washington, and Wyoming. Until such time as a State standard is promulgated, Federal OSHA will provide interim enforcement assistance, as appropriate, in those States.

XII. Effective Date

The final rule becomes effective on April 9, 2009. This gives employers 120 days to establish procedures required by the standard and to train employees in those procedures.

A single rulemaking participant addressed the effective date of the final rule. Mr. Michael Bohlman, representing USMX, urged the Agency to provide a transition period ''so that existing, safe VTL operations can be made to conform to the numerous, small but new requirements that may remain in the final rule'' (Ex. 50–10–2). However, he did not estimate how long a transition period would be necessary.

The final rule requires only incremental changes from existing VTL procedures as outlined in the Gurnham letter (Ex. 2). In comparison to the restrictions imposed by the Gurnham letter, the final rule includes additional provisions limiting the type of crane that may be used in VTLs, requiring a prelift, prohibiting handling containers below deck as a VTL, limiting VTL operations in windy conditions, and prohibiting VTLs of platform containers. The final rule also contains new requirements for employee training and the safe ground transport of vertically coupled containers that were not addressed by the letter of interpretation. Lastly, the final rule contains specifications on the strength of interbox connectors used in VTLs.

The differences in procedures required by the final rule compared to the Gurnham letter are relatively minor, and employers already performing VTLs should be capable of implementing the revised procedures reasonably quickly. Thus, these differences are not a significant consideration in establishing an effective date for the final rule.

The interbox connector specifications match those imposed by the ICHCA guidelines (Ex. 41), which have been in effect since 2003. The ICHCA guidelines include certification and marking provisions equivalent to those in the final rule. Based on comments supporting the adoption of practices consistent with the ICHCA guidelines, OSHA believes that employers are already using interbox connectors meeting these requirements in existing VTL operations. Thus, the final rule's requirements relating to the strength of interbox connectors are not a significant consideration in establishing an effective date for the final rule. Thus, OSHA believes that 120 days after the publication of the final rule should be sufficient time for employers to institute the procedural requirements of the standard and has set the effective date of those requirements in the standard accordingly.

However, employers may need substantial time to implement the training requirements contained in the final rule. This training will take some additional time beyond that needed to implement revised VTL procedures. There is evidence in the record that employers who are performing VTLs are already training employees in their current procedures (Exs. 50–13, 58, 61; Tr. 1–216—1–217). Thus, employers would only need to provide training in any revisions to their VTL procedures that are required by the final rule. Although employers who are not already performing VTLs would need to

provide more extensive training, these employers would only need to complete the training before commencing VTL operations rather than by the effective date of the final rule.

OSHA believes that 120 days after the publication of the final rule should be sufficient time for employers to institute the training requirements of the standard and has set the effective date of the training provision accordingly.

XIII. Authority and Signature

This document was prepared under the direction of Thomas M. Stohler, Acting Assistant Secretary of Labor for Occupational Safety and Health, U.S. Department of Labor, 200 Constitution Avenue, NW., Washington, DC 20210. It is issued pursuant to sections 4, 6, and 8 of the Occupational Safety and Health Act of 1970 (29 U.S.C. 653, 655, 657), section 41 of the Longshore and Harbor Workers' Compensation Act (33 U.S.C. 941), Secretary of Labor's Order 5–2007 (72 FR 31160), and 29 CFR 1911.

Signed at Washington, DC, this 25th day of November 2008.

Thomas M. Stohler,

Acting Assistant Secretary of Labor for Occupational Safety and Health.

List of Subjects

29 CFR Part 1917

Freight, Longshore and harbor workers, Occupational safety and health, Reporting and recordkeeping requirements.

29 CFR Part 1918

Freight, Longshore and harbor workers, Occupational safety and health, Reporting and recordkeeping requirements, Vessels.

■ Accordingly, OSHA amends 29 CFR parts 1917 and 1918 as follows:

PART 1917—MARINE TERMINALS

■ 1. The authority citation for Part 1917 is revised to read as follows:

Authority: Section 41, Longshore and Harbor Workers' Compensation Act (33 U.S.C. 941); secs. 4, 6, and 8 of the Occupational Safety and Health Act of 1970 (29 U.S.C. 653, 655, 657); Secretary of Labor's Order No. 12–71 (36 FR 8754), 8–76 (41 FR 25059), 9–83 (48 FR 35736), 6–96 (62 FR 111), 5–2002 (67 FR 65008), or 5–2007 (72 FR 31160), as applicable; and 29 CFR 1911.

Section 1917.28, also issued under 5 U.S.C. 553.

Section 1917.29, also issued under Sec. 29, Hazardous Materials Transportation Uniform Safety Act of 1990 (49 U.S.C. 1801–1819 and 5 U.S.C. 553).

■ 2. Section 1917.71 is amended by adding new paragraphs (i), (j), and (k) to read as follows:

§ 1917.71 Terminals handling intermodal containers or roll-on roll-off operations.

* * * * *

(i) *Vertical tandem lifts.* The following requirements apply to operations involving the lifting of two or more intermodal containers by the top container (vertical tandem lifts or VTLs).

(1) Each employee involved in VTL operations shall be trained and competent in the safety-related work practices, safety procedures, and other requirements in this section that pertain to their respective job assignments.

(2) No more than two intermodal containers may be lifted in a VTL.

(3) Before the lift begins, the employer shall ensure that the two containers lifted as part of a VTL are empty.

Note to paragraph (i)(3): The lift begins immediately following the end of the prelift required by paragraph (i)(5) of this section. Thus, the weight may be determined during the prelift using a load indicating device meeting § 1917.46(a)(1)(i)(A) on the crane being used to lift the VTL.

(4) The lift shall be performed using either a shore-based container gantry crane or another type of crane that:

(i) Has the precision control necessary to restrain unintended rotation of the containers about any axis,

(ii) Is capable of handling the load volume and wind sail potential of VTLs, and

(iii) Is specifically designed to handle containers.

(5) The employer shall ensure that the crane operator pauses the lift when the vertically coupled containers have just been lifted above the supporting surface to assure that each interbox connector is properly engaged.

(6) Containers below deck may not be handled as a VTL.

(7) VTL operations may not be conducted when the wind speed exceeds the lesser of:

(i) 55 km/h (34 mph or 30 knots) or

(ii) The crane manufacturer's recommendation for maximum wind speed.

(8) The employer shall ensure that each interbox connector used in a VTL operation:

(i) Automatically locks into corner castings on containers but only unlocks manually (manual twistlocks or latchlocks are not permitted);

(ii) Is designed to indicate whether it is locked or unlocked when fitted into a corner casting;

(iii) Locks and releases in an identical direction and manner as all other interbox connectors in the VTL;

(iv) Has been tested and certificated by a competent authority authorized under § 1918.11 of this chapter (for interbox connectors that are part of a vessel's gear) or § 1917.50 (for other interbox connectors):

(A) As having a load-bearing surface area of 800 mm^2 when connected to a corner casting with an opening that is 65.0 mm wide; and

(B) As having a safe working load of 98 kN (10,000 kg) with a safety factor of five when the load is applied by means of two corner castings with openings that are 65.0 mm wide or equivalent devices;

(v) Has a certificate that is available for inspection and that attests that the interbox connector meets the strength criteria given in paragraph (i)(8)(iv) of this section; and

(vi) Is clearly and durably marked with its safe working load for lifting and an identifying number or mark that will enable it to be associated with its test certificate.

(9) The employer shall ensure that each container and interbox connector used in a VTL and each corner casting to which a connector will be coupled is inspected immediately before use in the VTL.

(i) Each employee performing the inspection shall be capable of detecting defects or weaknesses and be able to assess their importance in relation to the safety of VTL operations.

(ii) The inspection of each interbox connector shall include: a visual examination for obvious structural defects, such as cracks; a check of its physical operation to determine that the lock is fully functional with adequate spring tension on each head; and a check for excessive corrosion and deterioration.

(iii) The inspection of each container and each of its corner castings shall include: a visual examination for obvious structural defects, such as cracks; a check for excessive corrosion and deterioration; and a visual examination to ensure that the opening to which an interbox connector will be connected has not been enlarged, that the welds are in good condition, and that it is free from ice, mud or other debris.

(iv) The employer shall establish a system to ensure that each defective or damaged interbox connector is removed from service.

(v) An interbox connector that has been found to be defective or damaged shall be removed from service and may not be used in VTL operations until repaired.

(vi) A container with a corner casting that exhibits any of the problems listed in paragraph (i)(9)(iii) of this section may not be lifted in a VTL.

(10) No platform container may be lifted as part of a VTL unit.

(j) *Transporting vertically coupled containers.* (1) Equipment other than cranes used to transport vertically connected containers shall be either specifically designed for this application or evaluated by a qualified engineer and determined to be capable of operating safely in this mode of operation.

(2) The employer shall develop, implement, and maintain a written plan for transporting vertically connected containers. The written plan shall establish procedures to ensure safe operating and turning speeds and shall address all conditions in the terminal that could affect the safety of VTL-related operations, including communication and coordination among all employees involved in these operations.

(k) *Safe work zone.* The employer shall establish a safe work zone within which employees may not be present when vertically connected containers are in motion.

(1) The safe work zone shall be sufficient to protect employees in the event that a container drops or overturns.

(2) The written transport plan required by paragraph (j)(2) of this section shall include the safe work zone and procedures to ensure that employees are not in this zone when a VTL is in motion.

PART 1918—SAFETY AND HEALTH REGULATIONS FOR LONGSHORING

■ 3. The authority citation for Part 1918 is revised to read as follows:

Authority: Sections 4, 6, and 8 of the Occupational Safety and Health Act of 1970, 29 U.S.C. 653, 655, 657; Sec. 41, Longshore and Harbor Workers' Compensation Act, 33 U.S.C. 941; Secretary of Labor's Order No. 6–96 (62 FR 111), 5–2002 (67 FR 65008) , or 5–2007 (72 FR 31160), as applicable; and 29 CFR 1911.

Section 1918.90 also issued under 5 U.S.C. 553.

Section 1918.100 also issued under Sec. 29, Hazardous Materials Transportation Uniform Safety Act of 1990 (49 U.S.C. 1801–1819 and 5 U.S.C. 553).

■ 4. Section 1918.85 is amended by adding new paragraph (m) to read as follows:

§ 1918.85 Containerized cargo operations.

* * * * *

(m) *Vertical tandem lifts.* Operations involving the lifting of two or more intermodal containers by the top container shall be performed following § 1917.71(i) and (k)(1) of this chapter.

[FR Doc. E8–28644 Filed 12–9–08; 8:45 am]

BILLING CODE 4510–26–P

Federal Register

Wednesday,
December 10, 2008

Part IV

The President

Proclamation 8327—Establishment of the World War II Valor In the Pacific National Monument

Federal Register
Vol. 73, No. 238
Wednesday, December 10, 2008

Presidential Documents

Title 3—

The President

Proclamation 8327 of December 5, 2008

Establishment of the World War II Valor In the Pacific National Monument

By the President of the United States of America

A Proclamation

Beginning at Pearl Harbor with the day of infamy that saw the sinking of the USS ARIZONA and ending on the deck of the USS MISSOURI in Tokyo Bay, many of the key battles of World War II were waged on and near American shores and throughout the Pacific. We must always remember the debt we owe to the members of the Greatest Generation for our liberty. Their gift is an enduring peace that transformed enemies into steadfast allies in the cause of democracy and freedom around the globe.

Americans will never forget the harrowing sacrifices made in the Pacific by soldiers and civilians that began at dawn on December 7, 1941, at Pearl Harbor on the island of Oahu. The surprise attack killed more than 2,000 American military personnel and dozens of civilians and thrust the United States fully into World War II.

America responded and mobilized our forces to fight side-by-side with our allies in the European, Atlantic, and Pacific theaters. The United States Navy engaged in epic sea battles, such as Midway, and our Armed Forces fought extraordinary land battles for the possession of occupied islands. These battles led to significant loss of life for both sides, as well as for the island's native peoples. Battlegrounds such as Guadalcanal, Tarawa, Saipan, Guam, Peleliu, the Philippines, Iwo Jima, and Okinawa are remembered for the heroic sacrifices and valor displayed there.

The conflict raged as far north as the Alaskan territory. The United States ultimately won the encounter in the Aleutian Island chain but not without protracted and costly battles.

There were also sacrifices on the home front. Tens of millions of Americans rallied to support the war effort, often at great personal cost. Men and women of all backgrounds were called upon as industrial workers, volunteers, and civil servants. Many Americans valiantly supported the war effort even as they struggled for their own civil rights.

In commemoration of this pivotal period in our Nation's history, the World War II Valor in the Pacific National Monument adds nine historic sites to our national heritage of monuments and memorials representing various aspects of the war in the Pacific.

Five of those sites are in the Pearl Harbor area, which is the home of both the USS ARIZONA and the USS MISSOURI—milestones of the Pacific campaign that mark the beginning and the end of the war. The sites in this area include: the USS ARIZONA Memorial and Visitor Center, the USS UTAH Memorial, the USS OKLAHOMA Memorial, the six Chief Petty Officer Bungalows on Ford Island, and mooring quays F6, F7, and F8, which constituted part of Battleship Row. The USS ARIZONA and USS UTAH vessels will not be designated as part of the national monument, but instead will be retained by the Department of Defense (through the Department of the Navy) as the final resting place for those entombed there.

Three sites are located in Alaska's Aleutian Islands. The first is the crash site of a Consolidated B-24D Liberator bomber—an aircraft of a type that played a highly significant role in World War II—located on Atka Island. The second is the site of Imperial Japan's occupation of Kiska Island, beginning in June 1942, which marks the northern limit of Imperial Japan's expansion in the Pacific. The Kiska site includes historic relics such as Imperial Japanese coastal and antiaircraft defenses, camps, roads, an airfield, a submarine base, a seaplane base, and other installations, as well as the remains of Allied defenses, including runway facilities and gun batteries.

The third Aleutian designation is on Attu Island, the site of the only land battle fought in North America during World War II. It still retains the scars of the battle: thousands of shell and bomb craters in the tundra; Japanese trenches, foxholes, and gun encampments; American ammunition magazines and dumps; and spent cartridges, shrapnel, and shells located at the scenes of heavy fighting. Attu later served as a base for bombing missions against Japanese holdings.

The last of the nine designations will bring increased understanding of the high price paid by some Americans on the home front. The Tule Lake Segregation Center National Historic Landmark and nearby Camp Tule Lake in California were both used to house Japanese-Americans relocated from the west coast of the United States. They encompass the original segregation center's stockade, the War Relocation Authority Motor Pool, the Post Engineer's Yard and Motor Pool, a small part of the Military Police Compound, several historic structures used by internees and prisoners of war at Camp Tule Lake, and the sprawling landscape that forms the historic setting.

WHEREAS much of the Federal property within the World War II Valor in the Pacific National Monument is easily accessible to visitors from around the world;

WHEREAS the Secretary of the Interior should be authorized and directed to interpret the broader story of World War II in the Pacific in partnership with the Department of Defense, the States of Hawaii, Alaska, and California, and other governmental and non-profit organizations;

WHEREAS the World War II Valor in the Pacific National Monument will promote understanding of related resources, encourage continuing research, present interpretive opportunities and programs for visitors to better understand and honor the sacrifices borne by the Greatest Generation, and tell the story from Pearl Harbor to Peace;

WHEREAS section 2 of the Act of June 8, 1906 (34 Stat. 225, 16 U.S.C. 431) (the ''Antiquities Act'') authorizes the President, in his discretion, to declare by public proclamation historic landmarks, historic and prehistoric structures, and other objects of historic or scientific interest that are situated upon lands owned or controlled by the Government of the United States to be national monuments, and to reserve as a part thereof parcels of land, the limits of which in all cases shall be confined to the smallest area compatible with the proper care and management of the objects to be protected;

WHEREAS it is in the public interest to preserve the areas described above and on the attached maps as the World War II Valor in the Pacific National Monument;

NOW, THEREFORE, I, GEORGE W. BUSH, President of the United States of America, by the authority vested in me by section 2 of the Act of June 8, 1906 (34 Stat. 225, 16 U.S.C. 431), do proclaim that there are hereby set apart and reserved as the World War II Valor in the Pacific National Monument for the purpose of protecting the objects described above, all lands and interests in lands owned or controlled by the Government of the United States within the boundaries described on the accompanying maps, which are attached and form a part of this proclamation. The Federal lands and interests in land reserved consist of approximately 6,310 acres,

which is the smallest area compatible with the proper care and management of the objects to be protected.

All Federal lands and interests in lands within the boundaries of this monument are hereby appropriated and withdrawn from all forms of entry, location, selection, sale, leasing, or other disposition under the public land laws, including, but not limited to, withdrawal from location, entry, and patent under mining laws, and from disposition under all laws relating to mineral and geothermal leasing.

Management of the National Monument

The Secretary of the Interior shall manage the monument through the National Park Service and the U.S. Fish and Wildlife Service, pursuant to applicable legal authorities, to implement the purposes of this proclamation. The National Park Service shall generally administer the national monument, except that the U.S. Fish and Wildlife Service shall administer the portions of the national monument that are within a national wildlife refuge. The National Park Service and the U.S. Fish and Wildlife Service may prepare an agreement to share, consistent with applicable laws, whatever resources are necessary to properly manage the monument.

For the purposes of preserving, interpreting, and enhancing public understanding and appreciation of the national monument and the broader story of World War II in the Pacific, the Secretary of the Interior, in consultation with the Secretary of Defense, shall prepare a management plan within 3 years of the date of this proclamation.

The Secretary of the Interior shall have management responsibility for the monument sites and facilities in Hawaii within the boundaries designated on the accompanying maps to the extent necessary to implement this proclamation, including the responsibility to maintain and repair the Chief Petty Officer Bungalows and other monument facilities. The Department of Defense may retain the authority to control access to those sites. The Department of the Interior through the National Park Service and the Department of the Navy may execute an agreement to provide for the operational needs and responsibilities of each Department in implementing this proclamation.

Armed Forces Actions

1. The prohibitions required by this proclamation shall not restrict activities and exercises of the Armed Forces (including those carried out by the United States Coast Guard).

2. All activities and exercises of the Armed Forces shall be carried out in a manner that avoids, to the extent practicable and consistent with operational requirements, adverse impacts on monument resources and qualities.

3. In the event of threatened or actual destruction of, loss of, or injury to a monument resource or quality resulting from an incident, including but not limited to spills and groundings, caused by a component of the Department of Defense or any other Federal agency, the cognizant component shall promptly coordinate with the Secretary of the Interior for the purpose of taking appropriate actions to respond to and mitigate the harm and, if possible, restore or replace the monument resource or quality.

4. Nothing in this proclamation or any regulation implementing it shall limit or otherwise affect the Armed Forces' discretion to use, maintain, improve, or manage any real property under the administrative control of a Military Department or otherwise limit the availability of such real property for military mission purposes.

The establishment of this monument is subject to valid existing rights.

Nothing in this proclamation shall be deemed to revoke any existing withdrawal, reservation, or appropriation; however, the national monument shall be the dominant reservation.

Nothing in this proclamation shall alter the authority of any Federal agency to take action in the monument area where otherwise authorized under applicable legal authorities, except as provided by this proclamation.

Warning is hereby given to all unauthorized persons not to appropriate, injure, destroy, or remove any feature of this monument and not to locate or settle upon any lands thereof.

IN WITNESS WHEREOF, I have hereunto set my hand this fifth day of December, in the year of our Lord two thousand eight, and of the Independence of the United States of America the two hundred and thirty-third.

Map A – Atka Island

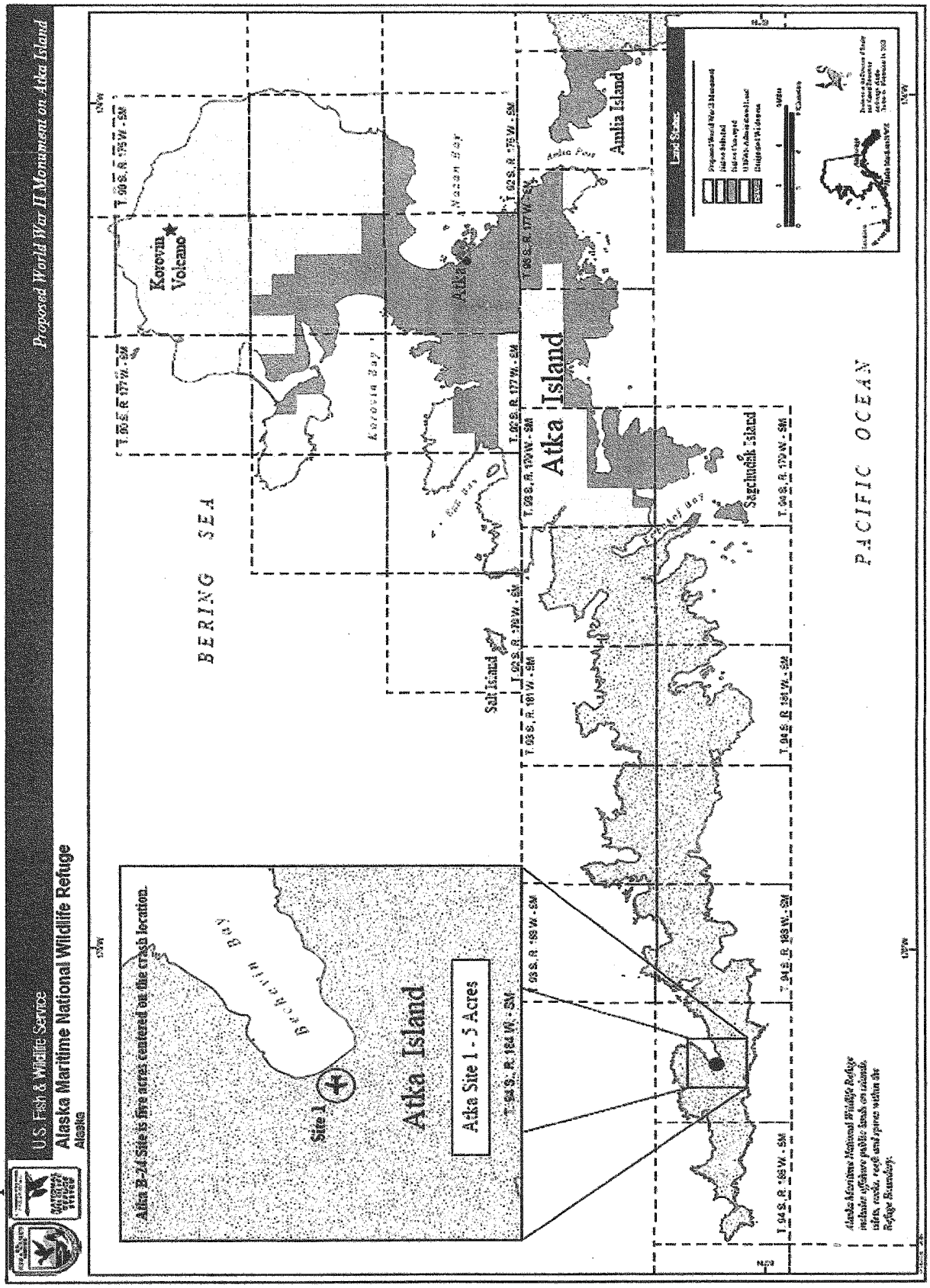

Map B – Kiska Island

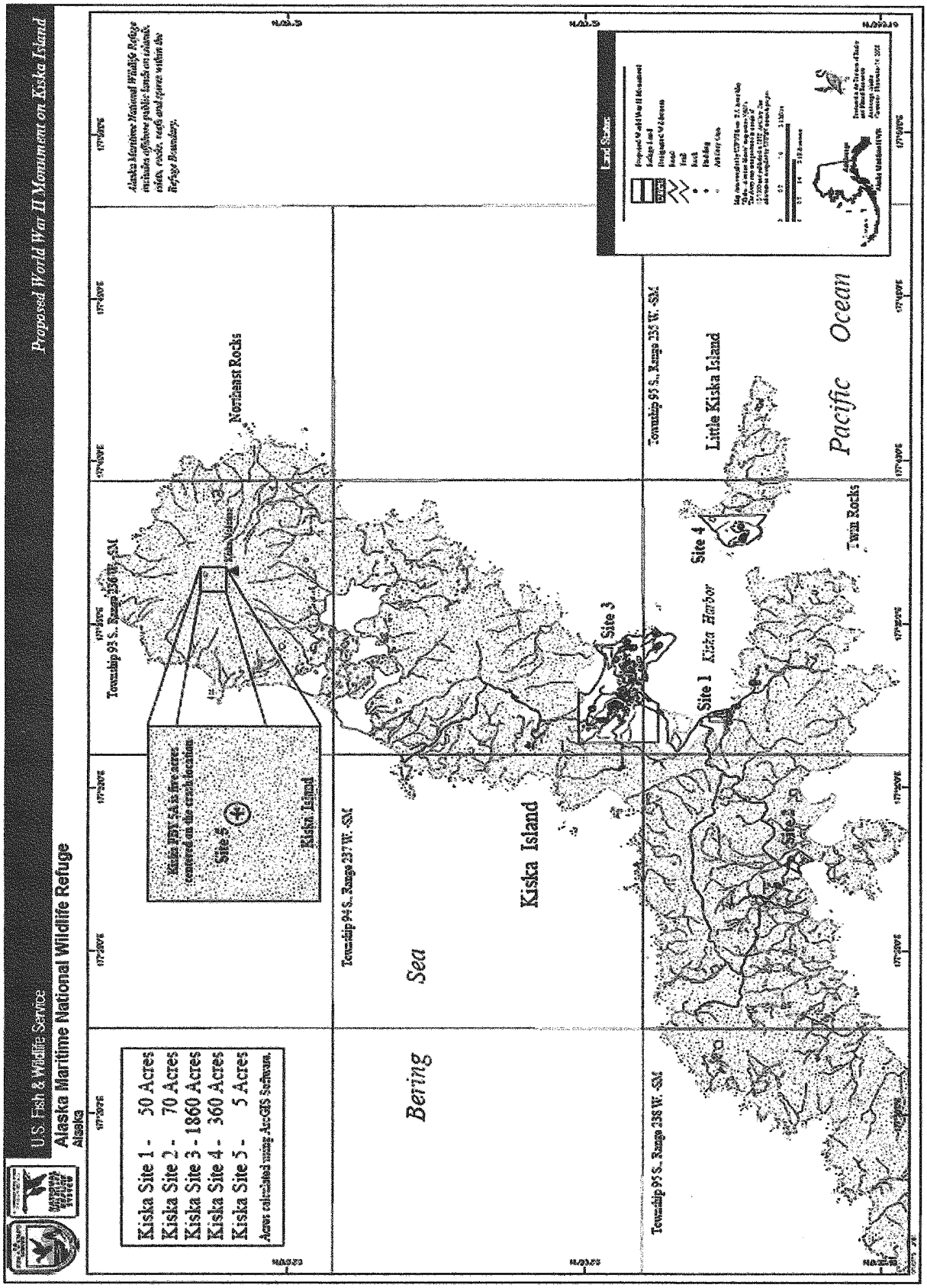

Map C – Attu Island

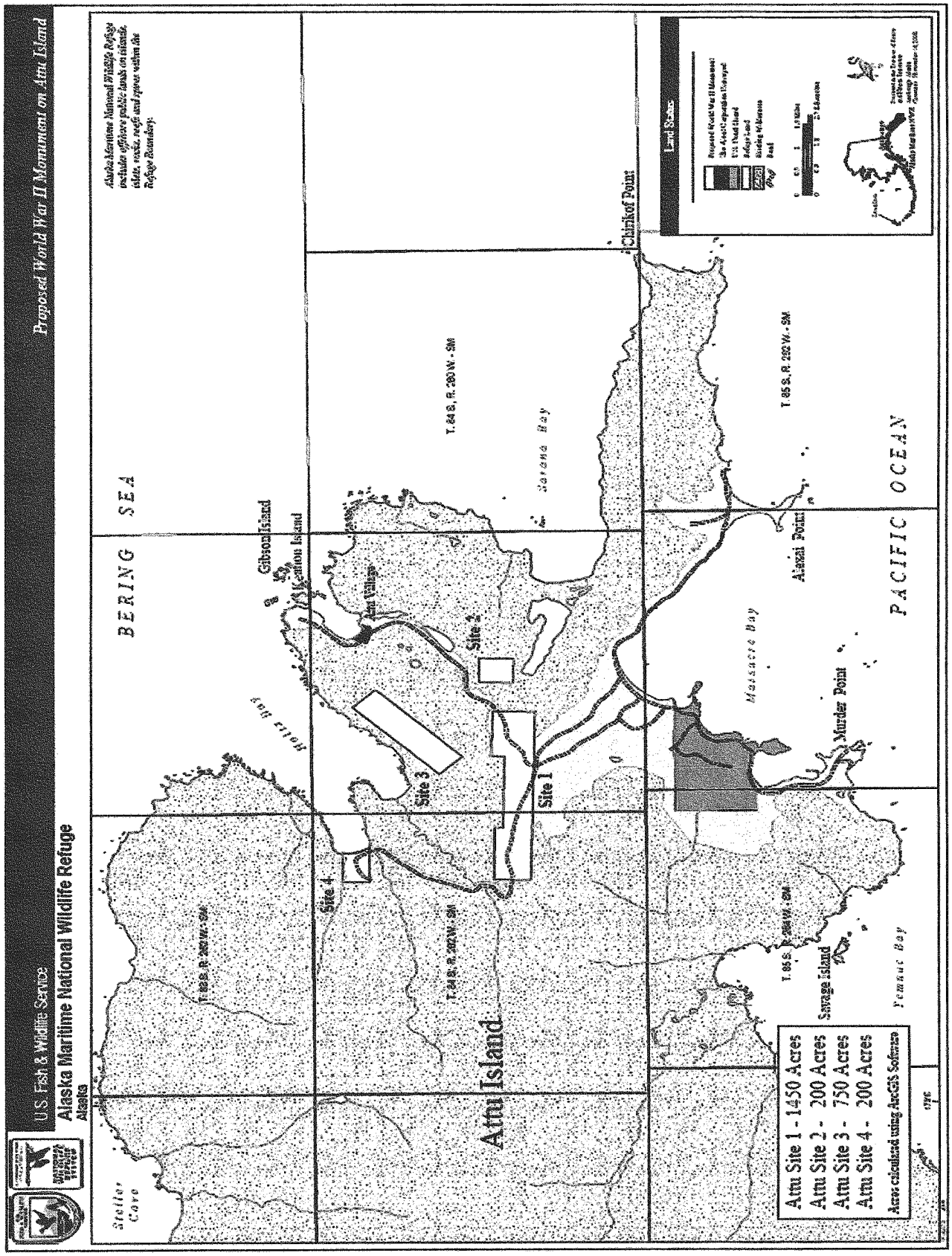

Map D – Tule Lake

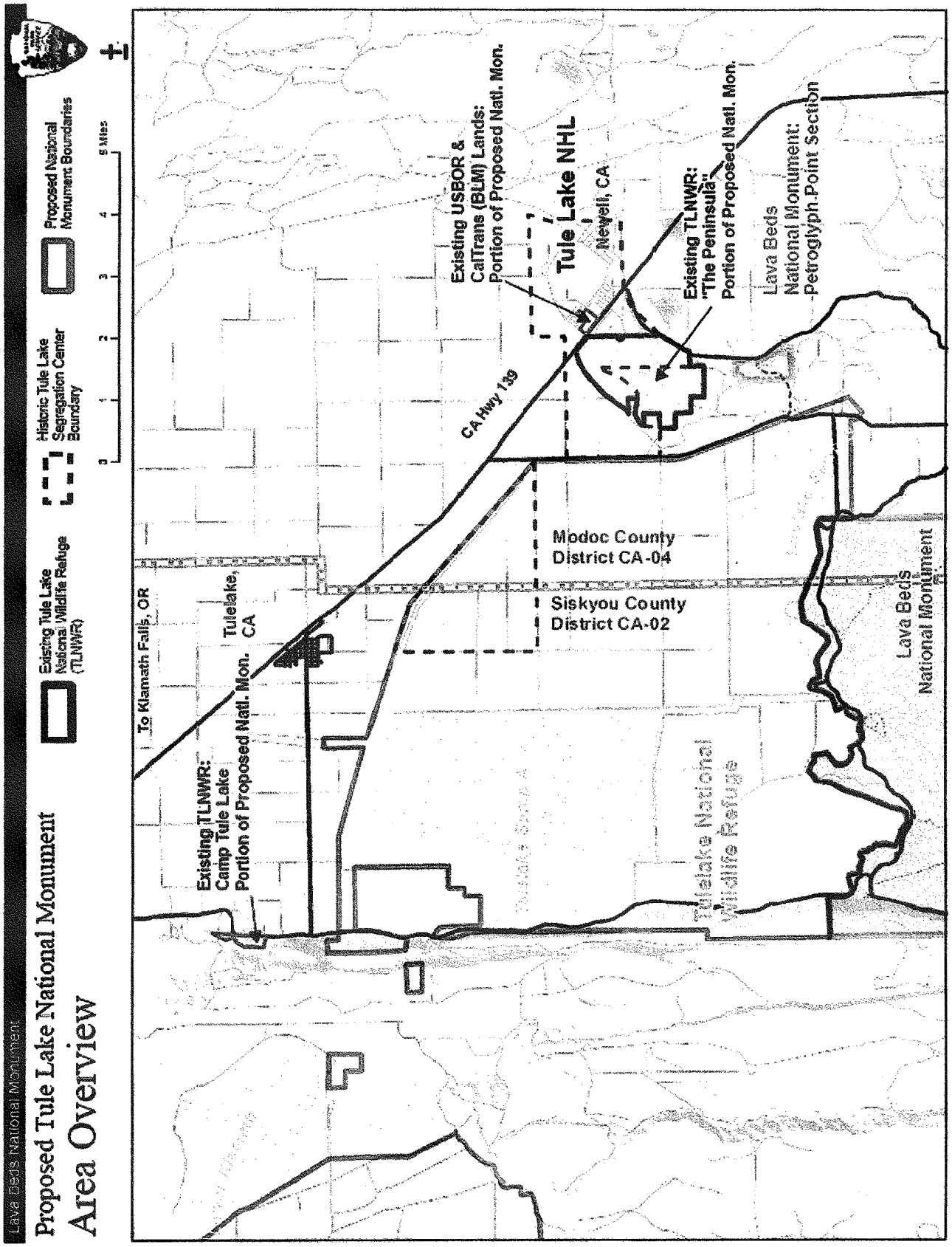

Map E - Halawa Landing and Pearl Harbor Visitor Center

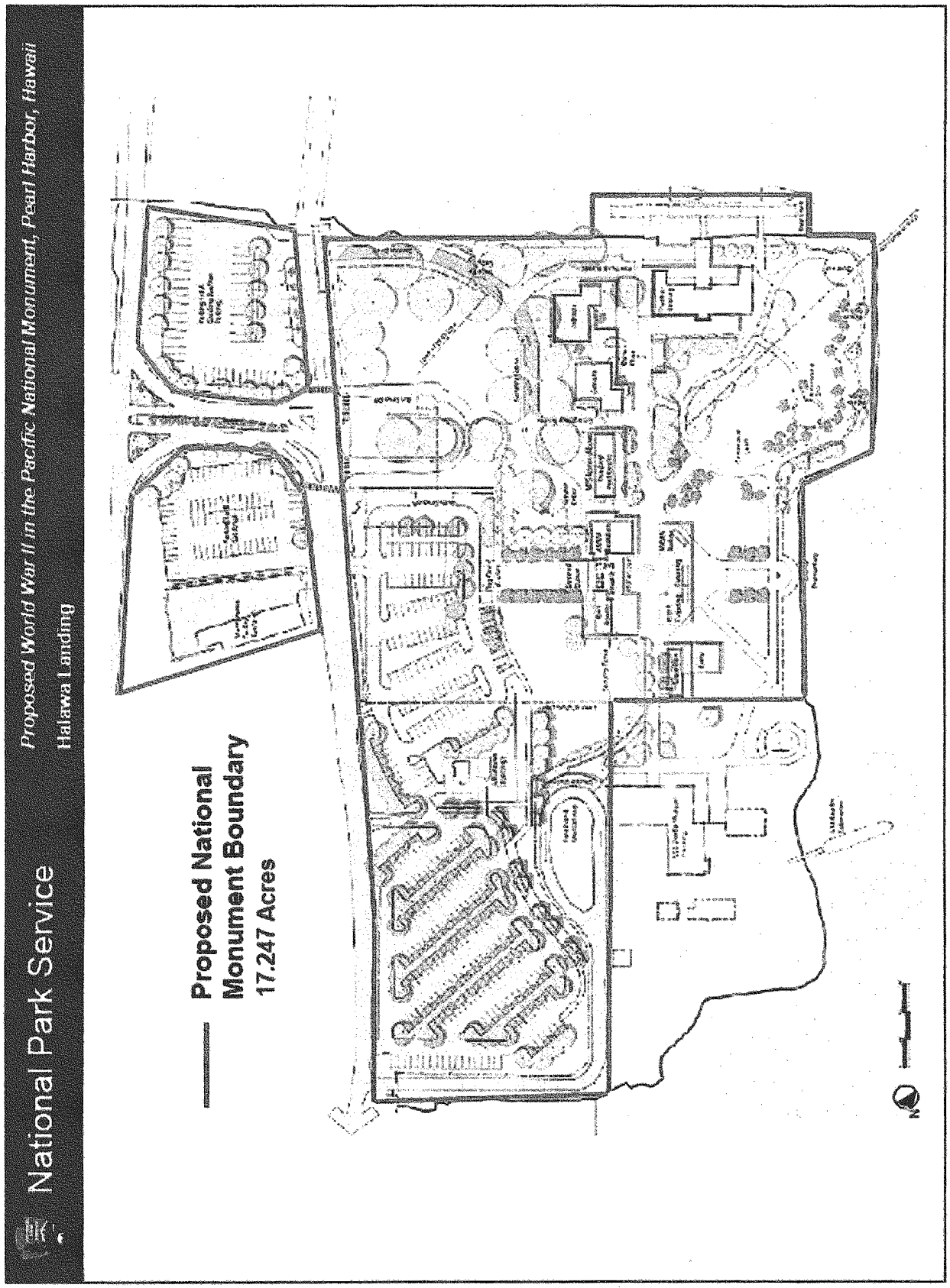

Map F - Bungalow and USS *Oklahoma* Memorial

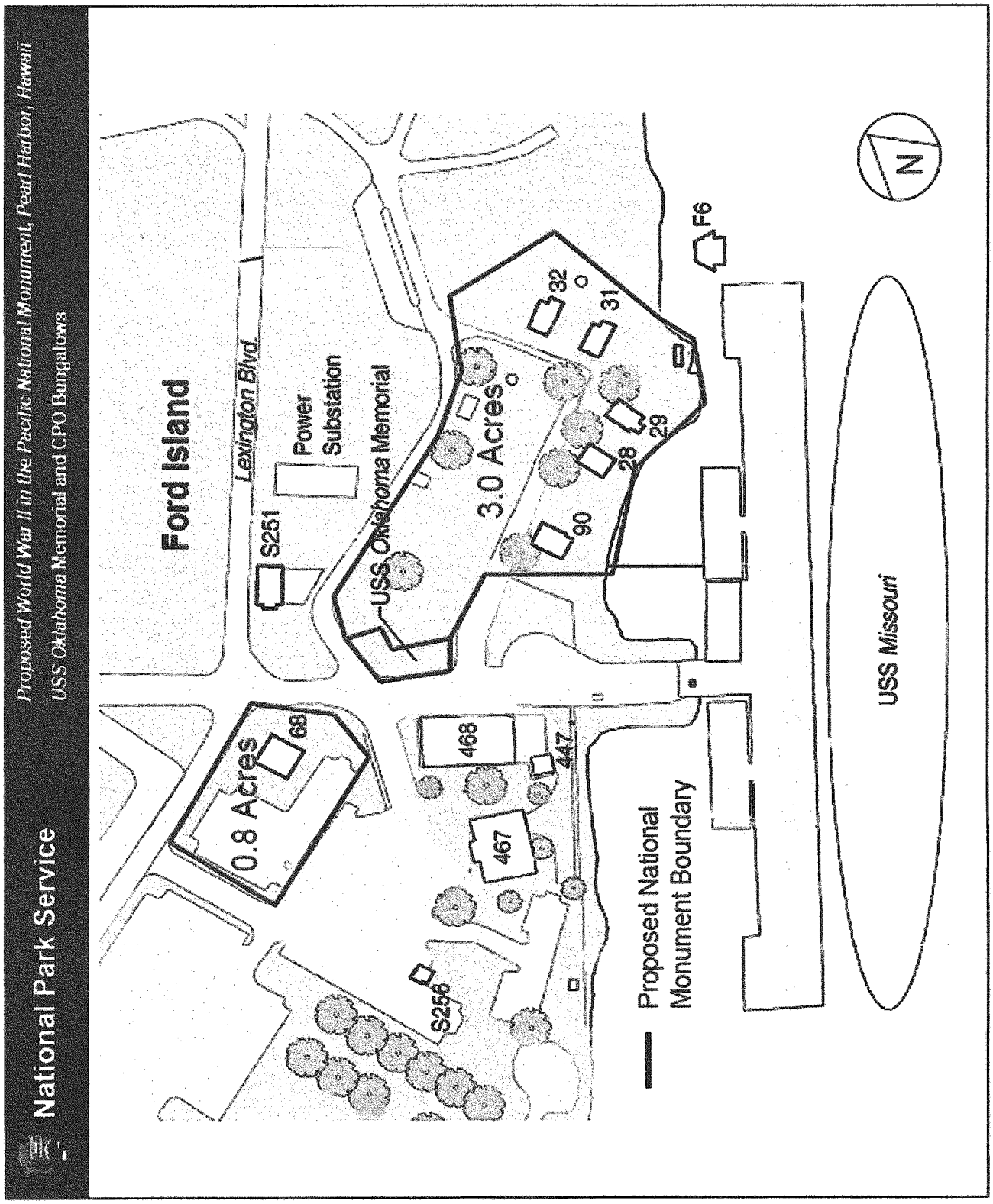

Map G - USS *Utah* Memorial

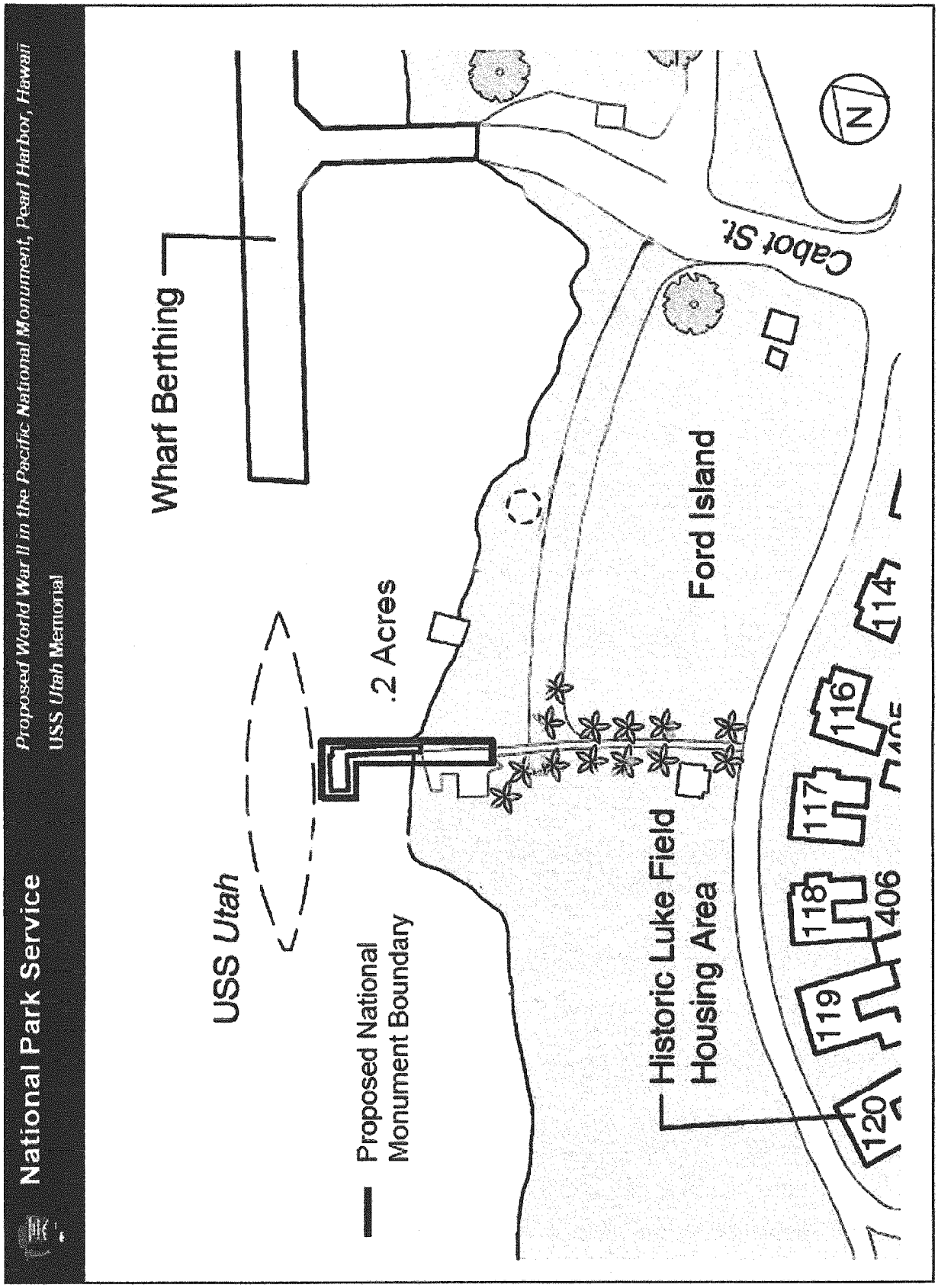

Map H – USS *Arizona* Memorial and Mooring Quays

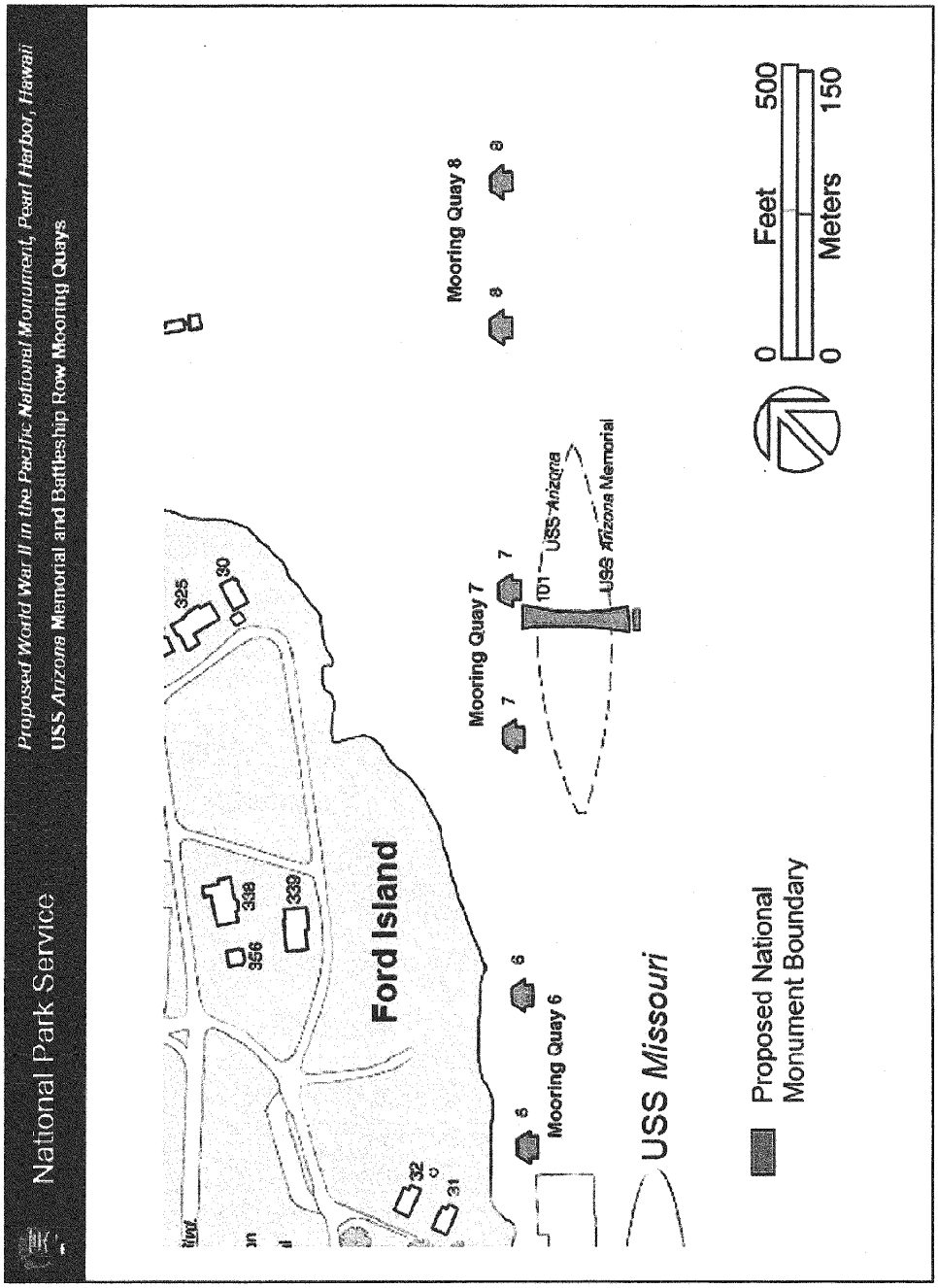

[FR Doc. E8–29344

Filed 12–9–08; 8:45 am]

Billing code 4310–10–C

Reader Aids

Federal Register

Vol. 73, No. 238

Wednesday, December 10, 2008

CUSTOMER SERVICE AND INFORMATION

Federal Register/Code of Federal Regulations	
General Information, indexes and other finding aids	**202–741–6000**
Laws	**741–6000**
Presidential Documents	
Executive orders and proclamations	**741–6000**
The United States Government Manual	**741–6000**
Other Services	
Electronic and on-line services (voice)	**741–6020**
Privacy Act Compilation	**741–6064**
Public Laws Update Service (numbers, dates, etc.)	**741–6043**
TTY for the deaf-and-hard-of-hearing	**741–6086**

ELECTRONIC RESEARCH

World Wide Web

Full text of the daily Federal Register, CFR and other publications is located at: **http://www.gpoaccess.gov/nara/index.html**

Federal Register information and research tools, including Public Inspection List, indexes, and links to GPO Access are located at: **http://www.archives.gov/federal1register**

E-mail

FEDREGTOC-L (Federal Register Table of Contents LISTSERV) is an open e-mail service that provides subscribers with a digital form of the Federal Register Table of Contents. The digital form of the Federal Register Table of Contents includes HTML and PDF links to the full text of each document.

To join or leave, go to **http://listserv.access.gpo.gov** and select *Online mailing list archives, FEDREGTOC-L, Join or leave the list (or change settings);* then follow the instructions.

PENS (Public Law Electronic Notification Service) is an e-mail service that notifies subscribers of recently enacted laws.

To subscribe, go to **http://listserv.gsa.gov/archives/publaws-l.html** and select *Join or leave the list (or change settings);* then follow the instructions.

FEDREGTOC-L and **PENS** are mailing lists only. We cannot respond to specific inquiries.

Reference questions. Send questions and comments about the Federal Register system to: **fedreg.info@nara.gov**

The Federal Register staff cannot interpret specific documents or regulations.

FEDERAL REGISTER PAGES AND DATE, DECEMBER

72687–73148 1
73149–73544 2
73545–73760 3
73761–73994 4
73995–74342 5
74343–74604 8
74605–74926 9
74927–75304 10

CFR PARTS AFFECTED DURING DECEMBER

At the end of each month, the Office of the Federal Register publishes separately a List of CFR Sections Affected (LSA), which lists parts and sections affected by documents published since the revision date of each title.

3 CFR

Proclamations:
8324 73149
8325 73151
8326 74925
8327 75293

Executive Orders:
12171 (amended by 13480) 73991
13480 73991

5 CFR

Proposed Rules:
315 74071
316 74071
532 74374
591 74858
9901 73606

6 CFR

Proposed Rules:
5 .....74632, 74633, 74635, 74637

7 CFR

250 74605
761 74343
762 74343
764 74343
767 74343
946 74346
984 .....73761, 73995
1430 73764

Proposed Rules:
319 74073
930 74073
1205 72747
1220 74078
1487 73617

8 CFR

299 74605

10 CFR

Proposed Rules:
430 74639
1004 74658
1010 72748

11 CFR

111 72687

12 CFR

308 73153
327 73158
701 73392
702 72688
704 72688

Proposed Rules:
226 74989

14 CFR

1 73768
25 73997
39 .....73165, 73168, 73169, 73545, 73782, 73785
91 73171
97 .....74927, 74928
101 73768
121 73171
125 73171
400 73768
401 73768
420 73768

Proposed Rules:
23 73195
39 .....73618, 74080, 74661, 74999, 75007, 75009
71 .....74376, 74377, 74378, 75011, 75013
234 74586
259 74586
399 74586

15 CFR

744 73999
760 74348
770 73547
774 73547
902 74003

18 CFR

284 .....72692, 73494

19 CFR

351 74930

20 CFR

Proposed Rules:
416 74663

21 CFR

101 74349
556 72714
558 72714
1300 73549
1315 73549
1316 73549

22 CFR

Proposed Rules:
62 75015

25 CFR

293 74004

26 CFR

301 73180

Proposed Rules:
1 .....73197, 74380
31 74082

28 CFR

28 74932
73 73181

29 CFR

1917 75246
1918 75246
4022 72715
4044 72716

Proposed Rules:

1926 73197

30 CFR

924 74943
938 72717

31 CFR

103 74010
560 73788

32 CFR

199 74945
706 ....72725, 73556, 73557

Proposed Rules:

185 73896

33 CFR

117 ....74018, 74966

Proposed Rules:

117 72752

34 CFR

99 74806
300 73006

36 CFR

2 74966
7 74606
212 74612

37 CFR

41 74972
381 72726

38 CFR

53 73558

39 CFR

Proposed Rules:

3001 72754

40 CFR

52 ....73562, 74019, 74027, 74029
63 72727
80 74403
112 74236
180 ....73580, 73586, 74972, 74978
220 74983
221 74983
222 74983
223 74983
224 74983
227 74983
228 74983
261 72912
262 72912
1045 73789
1054 73789
1065 73789

Proposed Rules:

Ch. I 73620
52 ....74096, 74097, 74098
60 ....72962, 73629
61 73629
63 ....72756, 73629, 73631
80 74350
180 73632
260 73520
261 73520
264 73520
265 73520
268 73520
270 73520
273 73520

42 CFR

440 73694

Proposed Rules:

84 ....75027, 75045

43 CFR

419 74031
429 74326
2300 74039
3800 73789

44 CFR

67 73182

Proposed Rules:

67 ....74666, 74673

45 CFR

301 74898
302 74898
303 74898
304 74898

Proposed Rules:

301 74408
302 74408
303 74408
305 74408
308 74408

46 CFR

Proposed Rules:

71 74426
114 74426
115 74426
122 74426
170 74426
171 74426
172 74426
174 74426
175 74426
176 74426
178 74426
179 74426
185 74426

47 CFR

51 72732
54 72732
61 72732
69 72732
73 ....73192, 74047

Proposed Rules:

73 73199

48 CFR

533 74613
552 74613

Proposed Rules:

536 73199
1804 73201
1845 73202
1852 ....73201, 73202

49 CFR

192 72737
229 74070
232 74070
383 73096
384 73096
390 73096
391 73096

Proposed Rules:

89 74098
213 73078
390 73129
391 73129
571 72758
573 74101
575 72758
579 ....72758, 74101

50 CFR

14 74615
17 ....73794, 74357
27 74966
229 73032
300 72737
404 73592
622 73192
648 ....74373, 74631
660 ....72739, 72740
679 74987

Proposed Rules:

17 ....73211, 74123, 74427, 74434, 74674, 74675, 75176
21 ....74445, 74447
226 74681
622 73219
665 75057
679 ....73222, 75059
680 74129

REMINDERS

The items in this list were editorially compiled as an aid to Federal Register users. Inclusion or exclusion from this list has no legal significance.

RULES GOING INTO EFFECT DECEMBER 10, 2008

COMMERCE DEPARTMENT

International Trade Administration

Withdrawal of the Regulatory Provisions Governing Targeted Dumping in Antidumping Duty Investigations; published 12-10-08

ENVIRONMENTAL PROTECTION AGENCY

Approval and Promulgation of Air Quality Implementation Plans:

Delaware; Control of Stationary Combustion Turbine Electric Generating Unit Emissions; published 11-10-08

Illinois; CILCO (AmerenEnergy) Edwards; published 11-10-08

Pesticide Tolerance:

Mefenpyr-diethyl and Metabolites; published 12-10-08

Pesticide Tolerances:

Novaluron; published 12-10-08

INTERIOR DEPARTMENT

Fish and Wildlife Service

General Regulations for Areas Administered by the National Park Service and the Fish and Wildlife Service; published 12-10-08

INTERIOR DEPARTMENT

National Park Service

General Regulations for Areas Administered by the National Park Service and the Fish and Wildlife Service; published 12-10-08

INTERIOR DEPARTMENT

Surface Mining Reclamation and Enforcement Office

Mississippi Regulatory Program; published 12-10-08

PERSONNEL MANAGEMENT OFFICE

Prevailing Rate Systems; Change in Nonappropriated Fund Federal Wage System Survey Schedule from Fiscal Year to Calendar Year; published 11-10-08

SOCIAL SECURITY ADMINISTRATION

Representative Payment Under Titles II, VIII and XVI of the Social Security Act; published 11-10-08

TRANSPORTATION DEPARTMENT

Federal Aviation Administration

Standard Instrument Approach Procedures, and Takeoff Minimums and Obstacle Departure Procedures; Miscellaneous Amendments; published 12-10-08

TREASURY DEPARTMENT

Comptroller of the Currency

Rules of Practice and Procedure; Civil Money Penalty Inflation Adjustments; published 11-10-08

VETERANS AFFAIRS DEPARTMENT

Schedule for Rating Disabilities; published 11-10-08

COMMENTS DUE NEXT WEEK

AGRICULTURE DEPARTMENT

Rural Business-Cooperative Service

Rural Development Grants; comments due by 12-15-08; published 10-15-08 [FR E8-23286]

AGRICULTURE DEPARTMENT

Rural Housing Service

Rural Development Grants; comments due by 12-15-08; published 10-15-08 [FR E8-23286]

AGRICULTURE DEPARTMENT

Rural Utilities Service

Amending the Household Water Well System Grant Program Regulations; comments due by 12-18-08; published 11-18-08 [FR E8-26769]

Rural Development Grants; comments due by 12-15-08; published 10-15-08 [FR E8-23286]

COMMERCE DEPARTMENT

National Oceanic and Atmospheric Administration

Atlantic Highly Migratory Species:

Atlantic Swordfish Quotas; comments due by 12-18-08; published 11-18-08 [FR E8-27337]

Fisheries of the Caribbean, Gulf of Mexico, and South Atlantic:

Amendments to the Spiny Lobster Fishery Management Plans for the Caribbean and Gulf of Mexico and South Atlantic; comments due by 12-15-08; published 10-29-08 [FR E8-25823]

Spiny Lobster (Panulirus argus) Resources of the Caribbean, Gulf of Mexico, and South Atlantic; Minimum Conservation Standards for Imported Spiny Lobster; comments due by 12-15-08; published 10-15-08 [FR E8-24484]

Fisheries of the Northeastern United States; Atlantic Mackerel, Squid, and Butterfish Fisheries:

Specifications and Management Measures; comments due by 12-17-08; published 11-17-08 [FR E8-27225]

Fisheries off West Coast States; Pacific Coast Groundfish Fishery:

Pacific Whiting Allocation; comments due by 12-16-08; published 12-1-08 [FR E8-28468]

Magnuson-Stevens Act Provisions; Scientific and Statistical Committees; Peer Review; National Standard Guidelines; comments due by 12-17-08; published 9-18-08 [FR E8-21837]

DEFENSE DEPARTMENT

Defense Acquisition Regulations System

Defense Federal Acquisition Regulation Supplement:

Clarification of Central Contractor Registration and Procurement Instrument Identification Data Requirements; comments due by 12-19-08; published 10-20-08 [FR E8-24486]

EDUCATION DEPARTMENT

Rehabilitation Training; comments due by 12-15-08; published 11-14-08 [FR E8-27136]

ENERGY DEPARTMENT

Energy Conservation Program:

Energy Conservation Standards for Certain Consumer Products and for Certain Commercial and Industrial Equipment; comments due by 12-16-08; published 10-17-08 [FR E8-23405]

ENVIRONMENTAL PROTECTION AGENCY

Approval and Promulgation of Air Quality Implementation Plans:

Virginia; Amendments to Ambient Air Quality Standards for Particulate Matter; comments due by 12-17-08; published 11-17-08 [FR E8-27192]

California State Implementation Plan, Ventura County Air Pollution Control District; Revisions; comments due by 12-19-08; published 11-19-08 [FR E8-27484]

Environmental Statements; Notice of Intent:

Coastal Nonpoint Pollution Control Programs; States and Territories—

Florida and South Carolina; Open for comments until further notice; published 2-11-08 [FR 08-00596]

Federal Antidegradation Policy Applicable to Waters of the United States within the Commonwealth of Pennsylvania; removal; comments due by 12-15-08; published 11-14-08 [FR E8-27209]

Removing the Federal Antidegradation Policy Applicable to Waters of the United States:

Commonwealth of Pennsylvania; comments due by 12-15-08; published 12-30-99 [FR E8-26951]

State Implementation Plans:

CA Revisions; Great Basin Unified Air Pollution Control District et al.; comments due by 12-18-08; published 11-18-08 [FR E8-27301]

FEDERAL COMMUNICATIONS COMMISSION

Radio Broadcasting Services:

Marquez, TX; comments due by 12-15-08; published 11-10-08 [FR E8-26741]

Silverpeak, NV; comments due by 12-15-08; published 11-7-08 [FR E8-26511]

Williston, SC; comments due by 12-15-08; published 11-10-08 [FR E8-26747]

FEDERAL DEPOSIT INSURANCE CORPORATION

Deposit Insurance Regulations:

Temporary Increase in Standard Coverage Amount; Mortgage Servicing Accounts; comments due by 12-16-08; published 10-17-08 [FR E8-24626]

FEDERAL HOUSING FINANCE BOARD

Affordable Housing Program Amendments

Federal Home Loan Bank Mortgage Refinancing Authority; comments due by 12-16-08; published 10-17-08 [FR E8-24320]

FEDERAL HOUSING FINANCING AGENCY

Affordable Housing Program Amendments

Federal Home Loan Bank Mortgage Refinancing Authority; comments due by 12-16-08; published 10-17-08 [FR E8-24320]

HEALTH AND HUMAN SERVICES DEPARTMENT

Food and Drug Administration

Applications for Food and Drug Administration Approval to Market a New Drug; Postmarketing Reports:

Reporting Information About Authorized Generic Drugs; Companion Document to Direct Final Rule; comments due by 12-15-08; published 9-29-08 [FR E8-22829]

Reporting Information About Authorized Generic Drugs; comments due by 12-15-08; published 9-29-08 [FR E8-22833]

HOMELAND SECURITY DEPARTMENT

Coast Guard

Safety Zones:

Fireworks Displays within the Fifth Coast Guard District; comments due by 12-15-08; published 11-14-08 [FR E8-27007]

Security Zone:

West Basin, Port Canaveral Harbor, Cape Canaveral, FL; comments due by 12-19-08; published 10-20-08 [FR E8-24808]

Security Zones; Escorted Vessels, Mobile, AL, Captain of the Port Zone; comments due by 12-15-08; published 11-13-08 [FR E8-26900]

HOMELAND SECURITY DEPARTMENT

Federal Emergency Management Agency

Agency Information Collection Activities; Proposals, Submissions, and Approvals; comments due by 12-15-08; published 10-15-08 [FR E8-24475]

Proposed Flood Elevation Determinations; comments due by 12-16-08; published 9-17-08 [FR E8-21687]

HOMELAND SECURITY DEPARTMENT

Privacy Act of 1974; Implementation of Exemptions; comments due by 12-15-08; published 11-14-08 [FR E8-27093]

HOUSING AND URBAN DEVELOPMENT DEPARTMENT

Agency Information Collection Activities; Proposals, Submissions, and Approvals:

Inspector Candidate Assessment Questionnaire; comments due by 12-15-08; published 10-15-08 [FR E8-24370]

Civil Money Penalties; Certain Prohibited Conduct; comments due by 12-16-08; published 10-17-08 [FR E8-24574]

Public Housing Operating Fund Program; Increased Terms of Energy Performance Contracts; comments due by 12-15-08; published 10-16-08 [FR E8-24573]

State Community Development Block Grant Program; Administrative Rule Changes; comments due by 12-16-08; published 10-17-08 [FR E8-24572]

INTERIOR DEPARTMENT

Fish and Wildlife Service

Endangered and Threatened Wildlife and Plants:

90-Day Finding on a Petition to List the Least Chub as Threatened or Endangered with Critical Habitat; comments due by 12-15-08; published 10-15-08 [FR E8-24467]

LABOR DEPARTMENT

Occupational Safety and Health Administration

Tree Care Operations; comments due by 12-17-08; published 9-18-08 [FR E8-21851]

SECURITIES AND EXCHANGE COMMISSION

Amendments to Regulation SHO; comments due by 12-16-08; published 10-17-08 [FR E8-24785]

SMALL BUSINESS ADMINISTRATION

Business Loan Program Regulations:

Incorporation of London Interbank Offered Rate Base Rate and Secondary Market Pool Interest Rate Changes; comments due by 12-15-08; published 11-13-08 [FR E8-26999]

TRANSPORTATION DEPARTMENT

Federal Aviation Administration

Airworthiness Directives:

Airbus Model A310 Series Airplanes; comments due by 12-15-08; published 11-13-08 [FR E8-26914]

Airbus Model A318, A319, A320, and A321 Series Airplanes; comments due by 12-17-08; published 11-17-08 [FR E8-27167]

BAE Systems (Operations) Limited (Jetstream) Model 4101 Airplanes; comments due by 12-17-08; published 11-17-08 [FR E8-27161]

Boeing Model 727 Airplanes; comments due by 12-15-08; published 10-29-08 [FR E8-25758]

Boeing Model 737-600, -700, -700C, -800, and -900 Series Airplanes; comments due by 12-15-08; published 10-30-08 [FR E8-25903]

Boeing Model 737-600, 700, 700C, 800, and 900 Series Airplanes; comments due by 12-15-08; published 10-31-08 [FR E8-25990]

Boeing Model 767 Airplanes; comments due by 12-16-08; published 11-21-08 [FR E8-27519]

Bombardier Model CL-600-1A11 (CL-600), CL-600-2A12 (CL-601), and CL-600-2B16 (CL-601-3A, CL-601-3R, and CL-604) Airplanes; comments due by 12-17-08; published 11-17-08 [FR E8-27162]

Bombardier Model CL 600 2B19 (Regional Jet Series 100 & 440) Airplanes; comments due by 12-15-08; published 11-14-08 [FR E8-26911]

Hawker Beechcraft Corporation Model MU 300 10 Airplanes and Model 400 and 400A Series Airplanes; and Raytheon (Mitsubishi) Model MU-300 Airplanes; comments due by 12-15-08; published 10-31-08 [FR E8-26000]

McDonnell Douglas Model 717-200 Airplanes; comments due by 12-15-08; published 10-31-08 [FR E8-25991]

Rolls-Royce plc RB211 Trent 553-61, 553A2-61, 556-61, 556A2-61, 556B-61, 556B2-61, 560-61, and 560A2-61 Turbofan Engines; comments due by 12-15-08; published 11-14-08 [FR E8-26200]

Proposed Establishment of Colored Federal Airway; Alaska; comments due by 12-15-08; published 10-30-08 [FR E8-25940]

Proposed Establishment of Special Air Traffic Rule, in the Vicinity of Luke AFB, AZ; Correction; comments due by 12-15-08; published 10-15-08 [FR E8-24373]

TREASURY DEPARTMENT

Foreign Assets Control Office

Licensing Procedures for Exportation of Agricultural Commodities, Medicine, and Medical Devices to Sudan and Iran; comments due by 12-17-08; published 11-17-08 [FR E8-27242]

TREASURY DEPARTMENT

Alcohol and Tobacco Tax and Trade Bureau

Proposed Expansions of the Russian River Valley and Northern Sonoma Viticultural Areas; Reopening of Comment Period; comments due by 12-19-08; published 10-29-08 [FR E8-25748]

VETERANS AFFAIRS DEPARTMENT

Special Ratings; comments due by 12-16-08; published 10-17-08 [FR E8-23825]

LIST OF PUBLIC LAWS

This is a continuing list of public bills from the current session of Congress which have become Federal laws. It may be used in conjunction with ''P L U S'' (Public Laws Update Service) on 202–741–6043. This list is also available online at *http://www.archives.gov/federal-register/laws.html*.

The text of laws is not published in the **Federal Register** but may be ordered in ''slip law'' (individual pamphlet) form from the Superintendent of Documents, U.S. Government Printing Office, Washington, DC 20402 (phone, 202–512–1808). The text will also be made available on the Internet from GPO Access at *http://www.gpoaccess.gov/plaws/index.html*. Some laws may not yet be available.

H.R. 2040/P.L. 110–451

Civil Rights Act of 1964 Commemorative Coin Act (Dec. 2, 2008; 122 Stat. 5021)

S. 602/P.L. 110–452

Child Safe Viewing Act of 2007 (Dec. 2, 2008; 122 Stat. 5025)

S. 1193/P.L. 110–453

To direct the Secretary of the Interior to take into trust 2 parcels of Federal land for the benefit of certain Indian Pueblos in the State of New Mexico, and for other purposes. (Dec. 2, 2008; 122 Stat. 5027)

Last List December 2, 2008

Public Laws Electronic Notification Service (PENS)

PENS is a free electronic mail notification service of newly enacted public laws. To subscribe, go to *http://listserv.gsa.gov/archives/publaws-l.html*

Note: This service is strictly for E-mail notification of new laws. The text of laws is not available through this service. **PENS** cannot respond to specific inquiries sent to this address.