Federal Register

6–23–09 Tuesday

Vol. 74 No. 119 June 23, 2009

Pages 29589–29930

The **FEDERAL REGISTER** (ISSN 0097–6326) is published daily, Monday through Friday, except official holidays, by the Office of the Federal Register, National Archives and Records Administration, Washington, DC 20408, under the Federal Register Act (44 U.S.C. Ch. 15) and the regulations of the Administrative Committee of the Federal Register (1 CFR Ch. I). The Superintendent of Documents, U.S. Government Printing Office, Washington, DC 20402 is the exclusive distributor of the official edition. Periodicals postage is paid at Washington, DC.

The **FEDERAL REGISTER** provides a uniform system for making available to the public regulations and legal notices issued by Federal agencies. These include Presidential proclamations and Executive Orders, Federal agency documents having general applicability and legal effect, documents required to be published by act of Congress, and other Federal agency documents of public interest.

Documents are on file for public inspection in the Office of the Federal Register the day before they are published, unless the issuing agency requests earlier filing. For a list of documents currently on file for public inspection, see *www.federalregister.gov.*

The seal of the National Archives and Records Administration authenticates the Federal Register as the official serial publication established under the Federal Register Act. Under 44 U.S.C. 1507, the contents of the **Federal Register** shall be judicially noticed.

The **Federal Register** is published in paper and on 24x microfiche. It is also available online at no charge as one of the databases on GPO Access, a service of the U.S. Government Printing Office.

The online edition of the **Federal Register** *www.gpoaccess.gov/nara,* available through GPO Access, is issued under the authority of the Administrative Committee of the Federal Register as the official legal equivalent of the paper and microfiche editions (44 U.S.C. 4101 and 1 CFR 5.10). It is updated by 6 a.m. each day the **Federal Register** is published and includes both text and graphics from Volume 59, Number 1 (January 2, 1994) forward.

For more information about GPO Access, contact the GPO Access User Support Team, call toll free 1-888-293-6498; DC area 202-512-1530; fax at 202-512-1262; or via e-mail at *gpoaccess@gpo.gov.* The Support Team is available between 7:00 a.m. and 9:00 p.m. Eastern Time, Monday–Friday, except official holidays.

The annual subscription price for the **Federal Register** paper edition is $749 plus postage, or $808, plus postage, for a combined **Federal Register, Federal Register** Index and List of CFR Sections Affected (LSA) subscription; the microfiche edition of the **Federal Register** including the **Federal Register** Index and LSA is $165, plus postage. Six month subscriptions are available for one-half the annual rate. The prevailing postal rates will be applied to orders according to the delivery method requested. The price of a single copy of the daily **Federal Register,** including postage, is based on the number of pages: $11 for an issue containing less than 200 pages; $22 for an issue containing 200 to 400 pages; and $33 for an issue containing more than 400 pages. Single issues of the microfiche edition may be purchased for $3 per copy, including postage. Remit check or money order, made payable to the Superintendent of Documents, or charge to your GPO Deposit Account, VISA, MasterCard, American Express, or Discover. Mail to: U.S. Government Printing Office—New Orders, P.O. Box 979050, St. Louis, MO 63197-9000; or call toll free 1-866-512-1800, DC area 202-512-1800; or go to the U.S. Government Online Bookstore site, see *bookstore.gpo.gov.*

There are no restrictions on the republication of material appearing in the **Federal Register.**

How To Cite This Publication: Use the volume number and the page number. Example: 74 FR 12345.

Postmaster: Send address changes to the Superintendent of Documents, Federal Register, U.S. Government Printing Office, Washington, DC 20402, along with the entire mailing label from the last issue received.

SUBSCRIPTIONS AND COPIES

PUBLIC

Subscriptions:

Paper or fiche	**202–512–1800**
Assistance with public subscriptions	**202–512–1806**
General online information	**202–512–1530; 1–888–293–6498**

Single copies/back copies:

Paper or fiche	**202–512–1800**
Assistance with public single copies	**1–866–512–1800 (Toll-Free)**

FEDERAL AGENCIES

Subscriptions:

Paper or fiche	**202–741–6005**
Assistance with Federal agency subscriptions	**202–741–6005**

FEDERAL REGISTER WORKSHOP

THE FEDERAL REGISTER: WHAT IT IS AND HOW TO USE IT

FOR: Any person who uses the Federal Register and Code of Federal Regulations.

WHO: Sponsored by the Office of the Federal Register.

WHAT: Free public briefings (approximately 3 hours) to present:

1. The regulatory process, with a focus on the Federal Register system and the public's role in the development of regulations.
2. The relationship between the Federal Register and Code of Federal Regulations.
3. The important elements of typical Federal Register documents.
4. An introduction to the finding aids of the FR/CFR system.

WHY: To provide the public with access to information necessary to research Federal agency regulations which directly affect them. There will be no discussion of specific agency regulations.

WHEN: Tuesday, July 14, 2009
9:00 a.m.–12:30 p.m.

WHERE: Office of the Federal Register
Conference Room, Suite 700
800 North Capitol Street, NW.
Washington, DC 20002

RESERVATIONS: (202) 741–6008

Printed on recycled paper.

Contents

Federal Register

Vol. 74, No. 119

Tuesday, June 23, 2009

Agriculture Department
See Animal and Plant Health Inspection Service
See Forest Service
See Grain Inspection, Packers and Stockyards Administration

Animal and Plant Health Inspection Service
NOTICES
Agency Information Collection Activities; Proposals, Submissions, and Approvals, 29656–29660

Antitrust Division
NOTICES
National Cooperative Research and Production Act (1993):
Cooperative Research Group on Clean Diesel V; Correction, 29718

Census Bureau
NOTICES
Privacy Act; Systems of Records, 29676–29678

Centers for Disease Control and Prevention
NOTICES
Meetings:
Disease, Disability, and Injury Prevention and Control Special Emphasis Panel, 29703, 29706

Centers for Medicare & Medicaid Services
NOTICES
Agency Information Collection Activities; Proposals, Submissions, and Approvals, 29700–29701
Meetings:
Hearing; Reconsideration of Disapproval of Washington State Plan Amendment (08–019), 29703–29704

Children and Families Administration
NOTICES
Agency Information Collection Activities; Proposals, Submissions, and Approvals, 29699–29702

Commerce Department
See Census Bureau
See International Trade Administration
See National Institute of Standards and Technology
See National Oceanic and Atmospheric Administration

Committee for the Implementation of Textile Agreements
NOTICES
Determination to Add a Product in Unrestricted Quantities to Annex 3.25:
Central America United States Free Trade Agreement, 29663–29664
Textile and Apparel Commercial Availability Provision, Determination:
Dominican Republic–Central America–United States Free Trade Agreement, 29664–29665

Corporation for National and Community Service
NOTICES
Agency Information Collection Activities; Proposals, Submissions, and Approvals, 29679

Defense Department
NOTICES
Federal Advisory Committee Charter:
Defense Policy Board, 29679–29680
Meetings:
Defense Audit Advisory Committee, 29680–29681
Defense Task Force on Sexual Assault in the Military Service; Correction, 29680

Drug Enforcement Administration
NOTICES
Importer of Controlled Substances; Applications, 29718–29719
Manufacturer of Controlled Substances; Applications, 29717–29720

Education Department
NOTICES
Agency Information Collection Activities; Proposals, Submissions, and Approvals, 29681–29682

Employment Standards Administration
NOTICES
Agency Information Collection Activities; Proposals, Submissions, and Approvals, 29721–29722

Energy Department
See Federal Energy Regulatory Commission
See Western Area Power Administration

Environmental Protection Agency
RULES
National Volatile Organic Compound Emission Standards for Aerosol Coatings, 29595–29607
PROPOSED RULES
EPAAR Prescription and Clauses–Government Property–Contract Property Administration, 29650–29655
NOTICES
Certain New Chemicals; Receipt and Status Information, 29686–29691
Consent Decrees:
Wildearth Guardians v. Jackson, 29691–29692
Meetings:
Clean Air Scientific Advisory Committee, 29693–29694
Science Advisory Board Ecological Processes and Effects Committee, 29692–29693
Proposed Approval of the Central Characterization Project's Remote-Handled Transuranic Waste Characterization Program at General Electric Vallecitos Nuclear Center, 29694–29697
Public Water Supply Supervision Program:
Program Revision for the State of Idaho, 29697–29698
Settlements:
W.R. Grace Superfund Site, Wilder, Campbell County, KY, 29698

Federal Aviation Administration
RULES
Special Conditions:
General Electric Company GEnx–2B Model Turbofan Engines; Correction, 29592

Standard Instrument Approach Procedures, and Takeoff Minimums and Obstacle Departure Procedures; Miscellaneous Amendments, 29592–29595
PROPOSED RULES
Airworthiness Directives:
Boeing Model 747–100, 747–100B, 747–200B, 747–200C, 747–200F, and 747SR Series Airplanes, 29630–29632
Bombardier Model CL–600–2A12 (CL–601) and CL–600–2B16 (CL 601–3A, CL–601–3R and CL–604) Airplanes, 29632–29634
NOTICES
Advisory Circular 33–7A:
Guidance for 30-Second and 2-Minute One-Engine-Inoperative (OEI) Ratings for Rotorcraft Turbine Engines, 29736

Federal Communications Commission
RULES
Relocation of 2 GHz Broadcast Auxiliary Service, 29607–29613
PROPOSED RULES
Improving Public Safety Communications in the 800 MHz Band, 29636–29650

Federal Energy Regulatory Commission
NOTICES
Applications:
Idaho Power Co., 29685
Filings:
Utt, James G., 29685–29686
Teleconferences and Meetings:
California Independent System Operator Corp., 29686

Federal Highway Administration
PROPOSED RULES
Discontinuance of Form FHWA–47, 29634–29636
NOTICES
Final Federal Agency Actions on Proposed Highway in Washington, 29737

Federal Railroad Administration
NOTICES
High-Speed Intercity Passenger Rail Program, 29900–29929

Fish and Wildlife Service
NOTICES
Comprehensive Conservation Plan and Environmental Assessment:
Texas Mid-Coast Refuge Complex, Brazoria and Matagorda Counties, TX, 29714–29715
Endangered Wildlife and Plants; Permits, 29715
Final Comprehensive Conservation Plan and Finding of No Significant Impact:
Sacramento, Delevan, Colusa, and Sutter National Wildlife Refuges, Glenn, Colusa, and Sutter Counties, CA, 29715–29716

Food and Drug Administration
NOTICES
Meetings:
Advisory Committee for Reproductive Health Drugs, 29705

Foreign Assets Control Office
RULES
Alphabetical Listing of Blocked Persons, Blocked Vessels, Specially Designated Nationals, etc., 29742–29860

Forest Service
NOTICES
Environmental Impact Statements; Intent:
Grand Mesa, Uncompahgre and Gunnison National Forests, etc., Hinsdale County, CO, 29661–29663

General Services Administration
NOTICES
Privacy Act; Systems of Records, 29698–29699

Grain Inspection, Packers and Stockyards Administration
NOTICES
Designation in the Northeast Texas Region, 29660

Health and Human Services Department
See Centers for Disease Control and Prevention
See Centers for Medicare & Medicaid Services
See Children and Families Administration
See Food and Drug Administration
See Health Resources and Services Administration
See National Institutes of Health
See Substance Abuse and Mental Health Services Administration
NOTICES
Meetings:
President's Council on Bioethics; Cancellation, 29699

Health Resources and Services Administration
NOTICES
Recruitment of Sites for Assignment of Corps Personnel Obligated under the National Health Service Corps Scholarship Program, 29708–29710

Homeland Security Department
See Transportation Security Administration
See U.S. Citizenship and Immigration Services

Information Security Oversight Office
NOTICES
Meetings:
Information Security Oversight Office Public Interest Declassification Board, 29729–29730

Interior Department
See Fish and Wildlife Service
See National Indian Gaming Commission

International Trade Administration
NOTICES
Antidumping:
Certain Helical Spring Lock Washers from the People's Republic of China, 29669–29670
Prestressed Concrete Steel Wire Strand from the People's Republic of China, 29665–29669
Countervailing Duties:
Prestressed Concrete Steel Wire Strand from the People's Republic of China, 29670–29674

International Trade Commission
NOTICES
Investigations:
Mobile Telephones and Wireless Communication Devices Featuring Digital Cameras, and Components, 29716
Products Advertised as Containing Creatine Ethyl Ester, 29717

Justice Department
See Antitrust Division

See Drug Enforcement Administration

Labor Department
See Employment Standards Administration
See Workers Compensation Programs Office
NOTICES
Promotion of Labor Rights and Employment in Pakistan, 29720

National Aeronautics and Space Administration
NOTICES
Agency Information Collection Activities; Proposals, Submissions, and Approvals, 29728–29729

National Archives and Records Administration
See Information Security Oversight Office

National Highway Traffic Safety Administration
RULES
Anthropomorphic Test Devices:
SID–IIs Side Impact Crash Test Dummy 5th Percentile Adult Female, 29862–29898
NOTICES
Agency Information Collection Activities; Proposals, Submissions, and Approvals, 29736–29737

National Indian Gaming Commission
NOTICES
Approved Class II and III Tribal Gaming Ordinances, 29711–29714

National Institute of Standards and Technology
NOTICES
Jointly Owned Invention Available for Non-Exclusive, Royalty-Free Licensing for Advanced Encryption Standard S-box Applications, 29675
Meetings:
Technology Innovation Program Advisory Board, 29675–29676

National Institutes of Health
NOTICES
Meetings:
Center for Scientific Review, 29702
National Cancer Institute, 29706
National Center for Complementary and Alternative Medicine, 29702–29703
National Human Genome Research Institute, 29706
National Institute of Neurological Disorders and Stroke, 29702
National Institute on Deafness and Other Communication Disorders, 29705

National Oceanic and Atmospheric Administration
NOTICES
General Provisions for Domestic Fisheries:
Application for Exempted Fishing Permit, 29674–29675
Taking Marine Mammals Incidental to Specified Activities:
Offshore Exploratory Drilling in the Beaufort Sea off Alaska, 29678–29679

National Science Foundation
NOTICES
Meetings; Sunshine Act, 29730

Nuclear Regulatory Commission
PROPOSED RULES
Export and Import of Nuclear Equipment and Material; Updates and Clarifications, 29614–29630
NOTICES
Environmental Assessment; Availability, etc.:
Union Carbide Corp., South Charleston, WV, 29730–29732
Facility Operating Licenses, etc.:
Crystal River Unit 3, Citrus County, FL, 29732–29734
Meetings; Sunshine Act, 29734–29735

Securities and Exchange Commission
NOTICES
Meetings; Sunshine Act, 29735

Sentencing Commission, United States
See United States Sentencing Commission

Small Business Administration
RULES
American Recovery and Reinvestment Act:
504 Loan Program Debt Refinancing, 29589–29592

State Department
NOTICES
Agency Information Collection Activities; Proposals, Submissions, and Approvals, 29735–29736

Substance Abuse and Mental Health Services Administration
NOTICES
National Registry of Evidence-based Programs and Practices:
Open Submission Period for Fiscal Year 2010, 29706–29708

Textile Agreements Implementation Committee
See Committee for the Implementation of Textile Agreements

Transportation Department
See Federal Aviation Administration
See Federal Highway Administration
See Federal Railroad Administration
See National Highway Traffic Safety Administration
See Transportation Security Administration

Transportation Security Administration
NOTICES
Agency Information Collection Activities; Proposals, Submissions, and Approvals, 29710–29711

Treasury Department
See Foreign Assets Control Office

U.S. Citizenship and Immigration Services
NOTICES
E-Verify Program Designated Agent Process; Request for Public Comment, 29711

United States Sentencing Commission
NOTICES
Sentencing Guidelines for United States Courts, 29737–29739

Veterans Affairs Department
NOTICES
Meetings:
Advisory Committee on Gulf War Veterans, 29739

Western Area Power Administration
NOTICES
Amistad and Falcon Projects Rate Order No. WAPA–143, 29682–29685

Workers Compensation Programs Office
NOTICES
Energy Employees Occupational Illness Compensation Program, 29722–29728

Separate Parts In This Issue

Part II
Treasury Department, Foreign Assets Control Office, 29742–29860

Part III
Transportation Department, National Highway Traffic Safety Administration, 29862–29898

Part IV
Transportation Department, Federal Railroad Administration, 29900–29929

Reader Aids

Consult the Reader Aids section at the end of this page for phone numbers, online resources, finding aids, reminders, and notice of recently enacted public laws.

To subscribe to the Federal Register Table of Contents LISTSERV electronic mailing list, go to http://listserv.access.gpo.gov and select Online mailing list archives, FEDREGTOC-L, Join or leave the list (or change settings); then follow the instructions.

CFR PARTS AFFECTED IN THIS ISSUE

A cumulative list of the parts affected this month can be found in the Reader Aids section at the end of this issue.

10 CFR

Proposed Rules:

110 29614

13 CFR

120 29589

14 CFR

33 29592

97 (2 documents) 29592, 29593

Proposed Rules:

39 (2 documents) 29630, 29632

23 CFR

Proposed Rules:

635 29634

31 CFR

Ch. V 29742

40 CFR

51 29595

59 29595

47 CFR

74 29607

78 29607

Proposed Rules:

74 29636

78 29636

48 CFR

Proposed Rules:

1545 29650

1552 29650

49 CFR

572 29862

Rules and Regulations

Federal Register
Vol. 74, No. 119
Tuesday, June 23, 2009

This section of the FEDERAL REGISTER contains regulatory documents having general applicability and legal effect, most of which are keyed to and codified in the Code of Federal Regulations, which is published under 50 titles pursuant to 44 U.S.C. 1510.

The Code of Federal Regulations is sold by the Superintendent of Documents. Prices of new books are listed in the first FEDERAL REGISTER issue of each week.

SMALL BUSINESS ADMINISTRATION

13 CFR Part 120

RIN 3245–AF91

American Recovery and Reinvestment Act: 504 Loan Program Debt Refinancing

AGENCY: U.S. Small Business Administration.

ACTION: Interim final rule with request for comments.

SUMMARY: This interim final rule implements section 504 of the American Recovery and Reinvestment Act of 2009 (Recovery Act), which authorizes projects approved for financing under Title V of the Small Business Investment Act to include a limited amount of debt refinancing if the project involves the expansion of a small business concern and meets certain other conditions. This interim final rule makes the existing 504 Loan Program rules consistent with section 504 of the Recovery Act.

DATES: *Effective Date:* This rule is effective June 23, 2009.

Comment Date: Comments must be received on or before July 23, 2009.

ADDRESSES: You may submit comments, identified by RIN 3245–AF91 by any of the following methods:

- *Federal eRulemaking* Portal: *http://www.regulations.gov.* Follow the instructions for submitting comments.
- *Mail:* Andrew B. McConnell Jr., Small Business Administration, Office of Financial Assistance, 409 Third Street, SW., 8th Floor, Washington, DC 20416.
- *Hand Delivery/Courier:* Andrew B. McConnell Jr., Small Business Administration, Office of Financial Assistance, 409 Third Street, SW., 8th Floor, Washington, DC 20416.

SBA will post all comments on *http://www.regulations.gov.*

If you wish to submit confidential business information (CBI) as defined in the User Notice at *http://www.regulations.gov,* please submit the information to Kelly Wilcox, Office of Performance Management, 409 Third Street, SW., 6th Floor, Washington, DC 20416, or send an e-mail to Andrew B. McConnell, Jr. at *recoveryact504debtrefi@sba.gov.* Highlight the information that you consider to be CBI and explain why you believe SBA should hold this information as confidential. SBA will review the information and make the final determination whether it will publish the information.

FOR FURTHER INFORMATION CONTACT: Andrew B. McConnell, Jr. at *recoveryact504debtrefi@sba.gov* or 202–205–7238.

SUPPLEMENTARY INFORMATION:

I. Background Information

The American Recovery and Reinvestment Act of 2009, Public Law 111–05, 123 Stat. 115 was enacted on February 17, 2009, to among other things, promote economic recovery by preserving and creating jobs, and assisting those most impacted by the severe economic conditions facing the nation. The U.S. Small Business Administration is one of several agencies that are intended to play a role in achieving these goals. The SBA received funding and authority through the Recovery Act to modify existing loan programs or establish new loan programs to help re-invigorate small business lending.

One of the provisions included in the Recovery Act provided new, permanent authority for refinancing community development loans under the 504 program. As amended by the Recovery Act, section 502(7)(A) of the Small Business Investment Act of 1958 (SBIA) allows financing approved for a 504 loan to include a limited amount of qualified debt refinancing, and section 502(7)(B) of the SBIA provides that the limited amount of qualified refinancing may not exceed 50 percent of the project cost of the expansion of a small business concern. As the 504 program is intended to assist the small business concern in expanding its business, this interim final rule broadly defines the phrase ''project involves expansion of a small business concern'' to include any project that involves the acquisition, construction or improvement of land, building or equipment for use by the small business concern. Section 502(7)(B) also sets forth certain conditions that a project must meet in order to be eligible for debt refinancing, and these conditions are included in this interim final rule with some additional definitions.

In addition, to protect the integrity of the 504 program and to minimize the risk to SBA of this new refinancing authority, SBA is amending the regulations to provide that certain loans cannot be approved under the authority delegated to Certified Development Companies (CDCs) under the Premier Certified Lenders Program (PCLP), if the applications include: (1) Waiving the requirement set forth in new section 120.882(e)(2) that the collateral securing refinanced debt must also secure the 504 loan; (2) approving a good cause exception to the general requirement set forth in the new section 120.882(e)(5) that there be at least a 10 percent reduction in the installment amount attributable to the debt being refinanced; and (3) refinancing loans held by the same CDC, the Third Party Lender financing the new project, or affiliates of either.

The debt refinancing authorized by the Recovery Act is available for loan applications received by SBA on or after the effective date of this rulemaking. Applications received or loans approved prior to that date may be modified to include debt refinancing provided that the related debenture has not been funded.

II. Section-by-Section Analysis

Section 120.882. SBA adds new paragraphs (e) and (f) to 120.882 to implement the new authority for refinancing existing eligible debt under the 504 loan program. These new provisions set forth the terms and conditions under which refinancing will be permitted in the 504 program, and define the phrase ''project involves expansion of a small business concern'' to include any project that involves the acquisition, construction or improvement of land, building or equipment for use by the small business concern.

Section 120.884. SBA amends § 120.884(a) to provide an exception to the general prohibition against using proceeds of the 504 loan for debt refinancing. In addition, current

paragraphs (b) and (c) will be redesignated as (c) and (d), respectively, and a new paragraph (b) will be added to provide that a CDC may not use 504 loan proceeds to pay any creditor in a position to sustain a loss causing a shift to SBA of all or part of a potential loss from an existing debt.

III. Justification for Publication as Interim Final Rule

In general, before issuing a final rule, SBA publishes the rule for public comment in accordance with the Administrative Procedure Act (APA), 5 U.S.C. 553. The APA provides an exception from the general rule where the agency finds good cause to omit public participation. 5 U.S.C. 553(c)(3)(B). The good cause requirement is satisfied when prior public participation can be shown to be impracticable, unnecessary, or contrary to the public interest. Under such circumstances, an agency may publish an interim final rule without soliciting public comment.

In enacting the good cause exception to standard rulemaking procedures, Congress recognized that emergency situations arise where an agency must issue a rule without public participation. The current turmoil in the financial markets is having a negative impact on the availability of financing for small businesses. SBA finds that good cause exists to publish this rule as an interim final rule in light of the urgent need to help small businesses sustain and survive during this economic downturn. This new refinancing authority will offer a significant opportunity for expanding businesses, allowing them to restructure existing debt into new 504 guaranteed loans that will expand their businesses and create jobs. It also has the potential to quickly free up critical capital for small business owners across the country, allowing them to continue to expand and stimulate the economy. This rule also amends the existing rules to make them consistent with section 504 of the Recovery Act, which was enacted and took effect on February 17, 2009. Advance solicitation of comments for this rulemaking would be unnecessary, impracticable, contrary to the public interest, and would harm those small businesses that need immediate access to capital.

Although this rule is being published as an interim final rule, comments are solicited from interested members of the public. These comments must be submitted on or before July 23, 2009. The SBA will consider these comments and the need for making any amendments as a result of these comments.

IV. Justification for Immediate Effective Date

The APA requires that ''publication or service of a substantive rule shall be made not less than 30 days before its effective date, except * * * as otherwise provided by the agency for good cause found and published with the rule.'' 5 U.S.C. 553(d)(3). The purpose of this provision is to provide interested and affected members of the public sufficient time to adjust their behavior before the rule takes effect. As this rule is implementing new authority and is expanding the 504 program's current requirements, there is no need for the public to adjust its behavior before the rule takes effect. SBA therefore finds that there is good cause for making this rule effective immediately instead of observing the 30-day period between publication and effective date.

Compliance With Executive Orders 12866, 12988, 13175 and 13132, the Paperwork Reduction Act (44 U.S.C., Ch. 35), and the Regulatory Flexibility Act (5 U.S.C. 601–612).

Executive Order 12866

The Office of Management and Budget (OMB) has determined that this rule constitutes a significant regulatory action for purposes of Executive Order 12866.

Executive Order 12988

This action meets applicable standards set forth in sections 3(a) and 3(b)(2) of Executive Order 12988, Civil Justice Reform, to minimize litigation, eliminate ambiguity, and reduce burden. The action does not have preemptive effect, and has retroactive effect only to the extent that the new debt refinancing authority will be made available to loan applications received, or loans approved, prior to the effective date of this rulemaking provided that the related debenture has not been funded.

Executive Order 13132

This rule does not have federalism implications as defined in Executive Order 13132. It will not have substantial direct effects on the States, on the relationship between the national government and the States, or on the distribution of power and responsibilities among the various levels of government, as specified in the Executive Order. As such it does not warrant the preparation of a Federalism Assessment.

Paperwork Reduction Act

The SBA has determined that this rule imposes additional reporting and recordkeeping requirements under the Paperwork Reduction Act, 44 U.S.C. Chapter 35. In order to make debt refinancing available as quickly as possible to assist those most impacted by the severe economic conditions facing the Nation, the agency has submitted three amended information collections to Office of Management and Budget (OMB) for review and approval under the emergency processing procedures in 5 CFR 1320.13. Respondents will be required to collect and provide to SBA certain information to support an application for debt refinancing under the section 504 loan program. This information is necessary to determine whether the application satisfies the conditions set forth in the Recovery Act and the implementing regulations and policies. The respondents also will be required to note on a closing document the amount approved for refinancing under the new regulations. The title, description and number of respondents, estimated annual cost and hour burdens imposed on the respondents, as a result of this collection of information, are outlined below.

I. *Title:* Application for Section 504 Loan (SBA Form 1244).

OMB Control Number: 3245–0071.

Description and Estimated Number of Respondents: This information collection will be submitted by the small businesses seeking to obtain financing, including the debt refinancing loans available as a result of the Recovery Act. SBA estimates a total of 9,100 small businesses will use this information collection.

Estimated Number of Responses: SBA estimates one application per small business concern; therefore this estimated total is also 9,100.

Estimated Time per Response: For applications submitted through the Abridged Standard Method, the current estimate is 2.08 hours per response; and for non-Abridged Standard method, 2.25 hours. As a result of the additional underwriting burden for the debt refinancing option SBA estimates these burdens to increase to 2.25 and 2.45 hours respectively.

Total Estimated Hour Burden: 21,210.

II. *Title:* Eligibility Information Required for PCLP Submission (SBA Form 2234C).

OMB Control Number: 3245–0346.

Description and Estimated Number of Respondents: Lenders in the Certified Development Company (CDC) Program (also referred to as the 504 Loan

Program). There are currently 27 of these lenders.

Estimated Number of Responses: 1700.

Estimated Time per Response: The current estimated burden is 40 minutes per response. As a result of the Recovery Act, the Agency estimates this burden to increase to 55 minutes.

Total Estimated Annual Hour Burden: 1275 hours.

III. *Title:* Servicing Agent Agreement (SBA Form 1506).

OMB Control Number: 3245–0193.

Description and Estimated Number of Respondents: This information is provided by the borrower, and Certified Development Company. Based on historical use of this form, SBA estimates 8,779 respondents annually.

Estimated Number of Responses: 8,403.

Estimated Time per Response: 1 hour based on current burden response rate; only de minis increase is expected as a result of the Recovery Act changes, since they require little or no additional effort from lenders.

Total Estimated Annual Hour Burden: 8,403.

SBA invites comments on: (1) Whether the proposed collection of information is necessary for the proper performance of SBA's functions, including whether the information will have a practical utility; (2) the accuracy of SBA's estimate of the burden of the proposed collections of information; (3) ways to enhance the quality, utility, and clarity of the information to be collected; and (4) ways to minimize the burden of the collection of information on respondents, including through the use of automated collection techniques, when appropriate, and other forms of information technology.

Please send comments by the closing date for comment for this interim final rule to SBA Desk Officer, Office of Management and Budget, Office of Information and Regulatory Affairs, 725 17th Street, NW., Washington, DC 20503 and to Andrew B. McConnell Jr., Small Business Administration, Office of Financial Assistance, 409 Third Street, SW., 8th Floor, Washington, DC 20416. If SBA receives approval for its emergency approval request, it will be followed by a request for clearance under normal procedures in accordance with 5 CFR 1320.10. Any comments received will be addressed at that time.

Regulatory Flexibility Act

Because this rule is an interim final rule, there is no requirement for SBA to prepare a Regulatory Flexibility Act (RFA) analysis. The RFA requires administrative agencies to consider the effect of their actions on small entities, small non-profit businesses, and small local governments. Pursuant to the RFA, when an agency issues a rule, the agency must prepare analysis that describes whether the impact of the rule will have a significant economic impact on a substantial number of small entities. However, the RFA requires such analysis only where notice and comment rulemaking is required.

List of Subjects in 13 CFR Part 120

Loan programs—business, Small businesses.

■ For the reasons stated in the preamble, SBA amends 13 CFR part 120 as follows:

PART 120—BUSINESS LOANS

■ 1. The authority for 13 CFR part 120 is revised to read as follows:

Authority: 15 U.S.C. 634(b) (6), (b) (7), (b) (14), (h), and note, 636(a), (h) and (m), 650, 687(f), 696(3), and 697(a) and (e); Public Law 111–5, 123 Stat. 115.

■ 2. Amend § 120.882 by adding new paragraphs (e) and (f) to read as follows:

§ 120.882 Eligible Project costs for 504 loans.

* * * * *

(e) If the project involves expansion of a small business concern, any amount of existing indebtedness that does not exceed 50 percent of the project cost of the expansion may be refinanced and added to the expansion cost if:

(1) The proceeds of the indebtedness were used to acquire land, including a building situated thereon, to construct a building thereon, or to purchase equipment. The assets acquired must be eligible for financing under the 504 loan program;

(2) The existing indebtedness is collateralized by fixed assets. The 504 eligible fixed assets collateralizing any debt to be refinanced or relating to the portion of debt being refinanced in the case of a partial refinance must also collateralize the 504 Loan unless SBA approves a waiver due to extraordinary circumstances. PCLP CDCs may not use their delegated authority to approve a loan requiring this waiver;

(3) The existing indebtedness was incurred for the benefit of the small business concern for which any new Project costs are incurred. Existing 7(a) and 504 loans may be refinanced under this section in accordance with SBA policies or procedures;

(4) The financing will be used only for refinancing existing indebtedness or costs relating to the project financed;

(5) The financing will provide a substantial benefit to the borrower when prepayment penalties, financing fees, and other financing costs are accounted for. For purposes of this paragraph, ''substantial benefit'' means that the portion of the new installment amount attributable to the debt being refinanced must be at least 10 percent less than the existing installment amount(s). Prepayment penalties, financing fees, and other financing costs must also be added to the amount being refinanced in calculating the percentage reduction in the new installment payment. Exceptions to the 10% reduction requirement may be approved by the D/FA or designee for good cause. PCLP CDCs may not use their delegated authority to approve a loan requiring this exception;

(6) The borrower has been current on all payments due on the existing debt for not less than 1 year preceding the date of refinancing. For purposes of this section, ''date of refinancing'' refers to the date the 504 loan is approved by SBA. Any unremedied delinquency after approval must be reported to SBA as an adverse change;

(7) The financing under section 504 will provide better terms or rate of interest than the existing indebtedness on the date of refinancing. For purposes of this paragraph, ''better terms or rate of interest'' may include longer maturity (but always commensurate with the assets' useful life), a lower interest rate committed on the Third Party Lender Loan or projected on the 504 loan, improved collateral conditions, or less restrictive loan covenants.

(8) The authority to approve the refinancing of same institution debt must be approved by SBA and is not delegated to the PCLP CDCs. For the purposes of this paragraph, ''same institution debt'' means any debt of the CDC or the Third Party Lender financing the new project, or of affiliates of either.

(f) For the purposes of paragraph (e), the phrase ''project involves expansion of a small business concern'' includes any project that involves the acquisition, construction or improvement of land, building or equipment for use by the small business concern.

■ 3. Amend § 120.884 as follows:

■ a. Revise paragraph (a);

■ b. Redesignate paragraphs (b) through (d) as (c) through (e) respectively; and

■ c. Add new paragraph (b).

§ 120.884 Ineligible costs for 504 loans.

* * * * *

(a) Debt refinancing (other than interim financing), except as provided in § 120.882(e).

(b) A CDC may not use 504 loan proceeds to pay any creditor in a position to sustain a loss causing a shift to SBA of all or part of a potential loss from an existing debt.

* * * * *

Dated: June 19, 2009.

Karen G. Mills,

Administrator.

[FR Doc. E9–14886 Filed 6–22–09; 8:45 am]

BILLING CODE 8025–01–P

DEPARTMENT OF TRANSPORTATION

Federal Aviation Administration

14 CFR Part 33

[Docket No. NE129; Special Conditions No. 33–007–SCI]

Special Conditions: General Electric Company GEnx–2B Model Turbofan Engines

AGENCY: Federal Aviation Administration (FAA), DOT.

ACTION: Final special conditions; correction.

SUMMARY: This document makes a correction to final special conditions, NE129, 33–007–SC, applicable to General Electric Company (GE) GEnx–2B67 and GEnx–2B69 model turbofan engines that was published in the **Federal Register** on April 24, 2009 (74 FR 18624). Two typographical errors occurred under the Background section and one typographical error under The Special Conditions section. This document corrects these errors. In all other respects, the original document remains the same.

DATES: The effective date of these special conditions is June 23, 2009.

SUPPLEMENTARY INFORMATION:

Background

A final special conditions applicable to the General Electric Company (GE) was published in the **Federal Register** on April 24, 2009 (74 FR 18624). The following corrections are needed:

On page 18625, in the left column in the Background, first paragraph, 7th line, the model ''GEnx–B54'' should be changed to ''GEnx–1B54''.

On page 18625, in the left column in the Background, 4th paragraph, 2nd line, the model ''GE90–11SB'' should be changed to ''GE90–115B''. On page 18626, center column in The Special Conditions, paragraph (e), 10th line, the term ''10 per'' should be changed to ''10^{-9} per''.

Issued in Burlington, Massachusetts, on June 12, 2009.

Peter A. White,

Acting Manager, Engine and Propeller Directorate, Aircraft Certification Service.

[FR Doc. E9–14618 Filed 6–22–09; 8:45 am]

BILLING CODE 4910–13–M

DEPARTMENT OF TRANSPORTATION

14 CFR Part 97

[Docket No. 30673; Amdt. No. 3327]

Standard Instrument Approach Procedures, and Takeoff Minimums and Obstacle Departure Procedures; Miscellaneous Amendments

AGENCY: Federal Aviation Administration (FAA), DOT.

ACTION: Final rule.

SUMMARY: This rule establishes, amends, suspends, or revokes Standard Instrument Approach Procedures (SIAPs) and associated Takeoff Minimums and Obstacle Departure Procedures for operations at certain airports. These regulatory actions are needed because of the adoption of new or revised criteria, or because of changes occurring in the National Airspace System, such as the commissioning of new navigational facilities, adding new obstacles, or changing air traffic requirements. These changes are designed to provide safe and efficient use of the navigable airspace and to promote safe flight operations under instrument flight rules at the affected airports.

DATES: This rule is effective June 23, 2009. The compliance date for each SIAP, associated Takeoff Minimums, and ODP is specified in the amendatory provisions.

The incorporation by reference of certain publications listed in the regulations is approved by the Director of the Federal Register as of June 23, 2009.

ADDRESSES: Availability of matter incorporated by reference in the amendment is as follows:

For Examination—

1. FAA Rules Docket, FAA Headquarters Building, 800 Independence Avenue, SW., Washington, DC 20591;

2. The FAA Regional Office of the region in which the affected airport is located;

3. The National Flight Procedures Office, 6500 South MacArthur Blvd., Oklahoma City, OK 73169 or

4. The National Archives and Records Administration (NARA). For information on the availability of this material at NARA, call 202–741–6030, or go to: *http://www.archives.gov/federal_register/code_of_federal_regulations/ibr_locations.html.*

Availability—All SIAPs are available online free of charge. Visit *nfdc.faa.gov* to register. Additionally, individual SIAP and Takeoff Minimums and ODP copies may be obtained from:

1. FAA Public Inquiry Center (APA–200), FAA Headquarters Building, 800 Independence Avenue, SW., Washington, DC 20591; or

2. The FAA Regional Office of the region in which the affected airport is located.

FOR FURTHER INFORMATION CONTACT: Harry J. Hodges, Flight Procedure Standards Branch (AFS–420) Flight Technologies and Programs Division, Flight Standards Service, Federal Aviation Administration, Mike Monroney Aeronautical Center, 6500 South MacArthur Blvd., Oklahoma City, OK 73169 (*Mail Address:* P.O. Box 25082, Oklahoma City, OK 73125) *telephone:* (405) 954–4164.

SUPPLEMENTARY INFORMATION: This rule amends Title 14, Code of Federal Regulations, Part 97 (14 CFR part 97) by amending the referenced SIAPs. The complete regulatory description of each SIAP is listed on the appropriate FAA Form 8260, as modified by the National Flight Data Center (FDC)/Permanent Notice to Airmen (P–NOTAM), and is incorporated by reference in the amendment under 5 U.S.C. 552(a), 1 CFR part 51, and § 97.20 of Title 14 of the Code of Federal Regulations.

The large number of SIAPs, their complex nature, and the need for a special format make their verbatim publication in the **Federal Register** expensive and impractical. Further, airmen do not use the regulatory text of the SIAPs, but refer to their graphic depiction on charts printed by publishers of aeronautical materials. Thus, the advantages of incorporation by reference are realized and publication of the complete description of each SIAP contained in FAA form documents is unnecessary. This amendment provides the affected CFR sections and specifies the types of SIAP and the corresponding effective dates. This amendment also identifies the airport and its location, the procedure and the amendment number.

The Rule

This amendment to 14 CFR part 97 is effective upon publication of each separate SIAP as amended in the transmittal. For safety and timeliness of change considerations, this amendment

incorporates only specific changes contained for each SIAP as modified by FDC/P–NOTAMs.

The SIAPs, as modified by FDC P–NOTAM, and contained in this amendment are based on the criteria contained in the U.S. Standard for Terminal Instrument Procedures (TERPS). In developing these changes to SIAPs, the TERPS criteria were applied only to specific conditions existing at the affected airports. All SIAP amendments in this rule have been previously issued by the FAA in a FDC NOTAM as an emergency action of immediate flight safety relating directly to published aeronautical charts. The circumstances which created the need for all these SIAP amendments requires making them effective in less than 30 days.

Because of the close and immediate relationship between these SIAPs and safety in air commerce, I find that notice and public procedure before adopting these SIAPs are impracticable and contrary to the public interest and, where applicable, that good cause exists for making these SIAPs effective in less than 30 days.

Conclusion

The FAA has determined that this regulation only involves an established body of technical regulations for which frequent and routine amendments are necessary to keep them operationally current. It, therefore- (1) is not a ''significant regulatory action'' under Executive Order 12866; (2) is not a ''significant rule'' under DOT regulatory Policies and Procedures (44 FR 11034; February 26, 1979); and (3) does not warrant preparation of a regulatory evaluation as the anticipated impact is so minimal. For the same reason, the FAA certifies that this amendment will not have a significant economic impact on a substantial number of small entities under the criteria of the Regulatory Flexibility Act.

List of Subjects in 14 CFR Part 97

Air traffic control, Airports, Incorporation by reference, and Navigation (air).

Issued in Washington, DC, on June 12, 2009.

John M. Allen,

Director, Flight Standards Service.

Adoption of the Amendment

■ Accordingly, pursuant to the authority delegated to me, Title 14, Code of Federal regulations, Part 97, 14 CFR part 97, is amended by amending Standard Instrument Approach Procedures, effective at 0901 UTC on the dates specified, as follows:

PART 97—STANDARD INSTRUMENT APPROACH PROCEDURES

■ 1. The authority citation for part 97 continues to read as follows:

Authority: 49 U.S.C. 106(g), 40103, 40106, 40113, 40114, 40120, 44502, 44514, 44701, 44719, 44721–44722.

■ 2. Part 97 is amended to read as follows:

By amending: § 97.23 VOR, VOR/DME, VOR or TACAN, and VOR/DME or TACAN; § 97.25 LOC, LOC/DME, LDA, LDA/DME, SDF, SDF/DME; § 97.27 NDB, NDB/DME; § 97.29 ILS, ILS/DME, MLS, MLS/DME, MLS/RNAV; § 97.31 RADAR SIAPs; § 97.33 RNAV SIAPs; and § 97.35 COPTER SIAPs, Identified as follows:

** * * Effective Upon Publication*

FDC date	State	City	Airport	FDC No.	Subject
06/02/09	MI	FREMONT	FREMONT MUNI	9/1459	RNAV (GPS) RWY 36, AMDT 1A.
06/02/09	MI	FREMONT	FREMONT MUNI	9/1460	RNAV (GPS) RWY 18, AMDT 1A.
06/02/09	MI	MENOMINEE	MENOMINEE–MARINETTE TWIN COUNTY.	9/1466	ILS RWY 3, AMDT 2A.
06/02/09	MI	MENOMINEE	MENOMINEE–MARINETTE TWIN COUNTY.	9/1467	RNAV (GPS) RWY 32, ORIG–A.
06/10/09	CA	MERCED	MERCED RGNL/MACREADY FIELD	9/2794	ILS OR LOC RWY 30, AMDT 14C.
06/10/09	CA	MERCED	MERCED RGNL/MACREADY FIELD	9/2795	LOC BC RWY 12, AMDT 10D.
06/10/09	CA	MERCED	MERCED RGNL/MACREADY FIELD	9/2796	GPS RWY 12, ORIG–C.

[FR Doc. E9–14555 Filed 6–22–09; 8:45 am]

BILLING CODE 4910–13–P

DEPARTMENT OF TRANSPORTATION

Federal Aviation Administration

14 CFR Part 97

[Docket No. 30672; Amdt. No 3326]

Standard Instrument Approach Procedures, and Takeoff Minimums and Obstacle Departure Procedures; Miscellaneous Amendments

AGENCY: Federal Aviation Administration (FAA), DOT.

ACTION: Final rule.

SUMMARY: This establishes, amends, suspends, or revokes Standard Instrument Approach Procedures (SIAPs) and associated Takeoff Minimums and Obstacle Departure Procedures for operations at certain airports. These regulatory actions are needed because of the adoption of new or revised criteria, or because of changes occurring in the National Airspace System, such as the commissioning of new navigational facilities, adding new obstacles, or changing air traffic requirements. These changes are designed to provide safe and efficient use of the navigable airspace and to promote safe flight operations under instrument flight rules at the affected airports.

DATES: This rule is effective June 23, 2009. The compliance date for each SIAP, associated Takeoff Minimums, and ODP is specified in the amendatory provisions.

The incorporation by reference of certain publications listed in the regulations is approved by the Director of the Federal Register as of June 23, 2009.

ADDRESSES: Availability of matters incorporated by reference in the amendment is as follows:

For Examination

1. FAA Rules Docket, FAA Headquarters Building, 800 Independence Avenue, SW., Washington, DC 20591;
2. The FAA Regional Office of the region in which the affected airport is located;
3. The National Flight Procedures Office, 6500 South MacArthur Blvd., Oklahoma City, OK 73169 or
4. The National Archives and Records Administration (NARA). For information on the availability of this material at NARA, call 202–741–6030, or go to: *http://www.archives.gov/federal_register/code_of_federal_regulations/ibr_locations.html.*

Availability

All SIAPs and Takeoff Minimums and ODPs are available online free of charge. Visit *http://www.nfdc.faa.gov* to register. Additionally, individual SIAP and Takeoff Minimums and ODP copies may be obtained from:

1. FAA Public Inquiry Center (APA–200), FAA Headquarters Building, 800 Independence Avenue, SW., Washington, DC 20591; or
2. The FAA Regional Office of the region in which the affected airport is located.

FOR FURTHER INFORMATION CONTACT: Harry J. Hodges, Flight Procedure Standards Branch (AFS–420), Flight Technologies and Programs Divisions, Flight Standards Service, Federal Aviation Administration, Mike Monroney Aeronautical Center, 6500 South MacArthur Blvd., Oklahoma City, OK 73169 (*Mail Address:* P.O. Box 25082, Oklahoma City, OK 73125) *Telephone:* (405) 954–4164.

SUPPLEMENTARY INFORMATION: This rule amends Title 14 of the Code of Federal Regulations, Part 97 (14 CFR part 97), by establishing, amending, suspending, or revoking SIAPS, Takeoff Minimums and/or ODPS. The complete regulators description of each SIAP and its associated Takeoff Minimums or ODP for an identified airport is listed on FAA form documents which are incorporated by reference in this amendment under 5 U.S.C. 552(a), 1 CFR part 51, and 14 CFR part 97.20. The applicable FAA Forms are FAA Forms 8260–3, 8260–4, 8260–5, 8260–15A, and 8260–15B when required by an entry on 8260–15A.

The large number of SIAPs, Takeoff Minimums and ODPs, in addition to their complex nature and the need for a special format make publication in the **Federal Register** expensive and impractical. Furthermore, airmen do not use the regulatory text of the SIAPs, Takeoff Minimums or ODPs, but instead refer to their depiction on charts printed by publishers of aeronautical materials. The advantages of incorporation by reference are realized and publication of the complete description of each SIAP, Takeoff Minimums and ODP listed on FAA forms is unnecessary. This amendment provides the affected CFR sections and specifies the types of SIAPs and the effective dates of the, associated Takeoff Minimums and ODPs. This amendment also identifies the airport and its location, the procedure, and the amendment number.

The Rule

This amendment to 14 CFR part 97 is effective upon publication of each separate SIAP, Takeoff Minimums and ODP as contained in the transmittal. Some SIAP and Takeoff Minimums and textual ODP amendments may have been issued previously by the FAA in a Flight Data Center (FDC) Notice to Airmen (NOTAM) as an emergency action of immediate flight safety relating directly to published aeronautical charts. The circumstances which created the need for some SIAP and Takeoff Minimums and ODP amendments may require making them effective in less than 30 days. For the remaining SIAPS and Takeoff Minimums and ODPS, an effective date at least 30 days after publication is provided.

Further, the SIAPs and Takeoff Minimums and ODPS contained in this amendment are based on the criteria contained in the U.S. Standard for Terminal Instrument Procedures (TERPS). In developing these SIAPS and Takeoff Minimums and ODPs, the TERPS criteria were applied to the conditions existing or anticipated at the affected airports. Because of the close and immediate relationship between these SIAPs, Takeoff Minimums and ODPs, and safety in air commerce, I find that notice and public procedures before adopting these SIAPS, Takeoff Minimums and ODPs are impracticable and contrary to the public interest and, where applicable, that good cause exists for making some SIAPs effective in less than 30 days.

Conclusion

The FAA has determined that this regulation only involves an established body of technical regulations for which frequent and routine amendments are necessary to keep them operationally current. It, therefore—(1) Is not a ''significant regulatory action'' under Executive Order 12866; (2) is not a ''significant rule'' under DOT Regulatory Policies and Procedures (44 FR 11034; February 26,1979); and (3) does not warrant preparation of a regulatory evaluation as the anticipated impact is so minimal. For the same reason, the FAA certifies that this amendment will not have a significant economic impact on a substantial number of small entities under the criteria of the Regulatory Flexibility Act.

List of Subjects in 14 CFR Part 97

Air Traffic Control, Airports, Incorporation by reference, and Navigation (Air).

Issued in Washington, DC, on June 12, 2009.

John M. Allen,

Director, Flight Standards Service.

Adoption of the Amendment

Accordingly, pursuant to the authority delegated to me, Title 14, Code of Federal Regulations, Part 97 (14 CFR part 97) is amended by establishing, amending, suspending, or revoking Standard Instrument Approach Procedures and/or Takeoff Minimums and/or Obstacle Departure Procedures effective at 0902 UTC on the dates specified, as follows:

PART 97—STANDARD INSTRUMENT APPROACH PROCEDURES

■ 1. The authority citation for part 97 continues to read as follows:

Authority: 49 U.S.C. 106(g), 40103, 40106, 40113, 40114, 40120, 44502, 44514, 44701, 44719, 44721–44722.

■ 2. Part 97 is amended to read as follows:

Effective 30 JUL 2009

Miami, FL, Miami Intl, ILS OR LOC RWY 27, Amdt 25.
Miami, FL, Miami Intl, RNAV (GPS) Z RWY 27, Amdt 2.
Miami, FL, Miami Intl, RNAV (RNP) Y RWY 27, Amdt 1.
Miami, FL, Opa-Locka Executive, Takeoff Minimums and Obstacle DP, Amdt 8.
Ormond Beach, FL, Ormond Beach Muni, Takeoff Minimums and Obstacle DP, Orig.
Tampa, FL, Peter O. Knight, Takeoff Minimums and Obstacle DP, Amdt 5.
Bainbridge, GA, Decatur County Industrial Air Park, Takeoff Minimums and Obstacle DP, Orig.
Ashland, KY, Ashland Rgnl, RNAV (GPS) RWY 28, Orig-A.
Millinocket, ME, Millinocket Muni, LOC RWY 29, Orig-C, CANCELLED.
Millinocket, ME, Millinocket Muni, NDB RWY 29, Amdt 4.
Millinocket, ME, Millinocket Muni, RNAV (GPS) RWY 29, Orig.
Millinocket, ME, Millinocket Muni, VOR RWY 29, Orig.
Millinocket, ME, Millinocket Muni, VOR OR GPS–A, Amdt 10B, CANCELLED.
Edenton, NC, Northeastern Rgnl, Takeoff Minimums and Obstacle DP, Orig.

Rocky Mount, NC, Rocky Mount-Wilson Rgnl, RNAV (GPS) RWY 4, Amdt 1.
Rocky Mount, NC, Rocky Mount-Wilson Rgnl, RNAV (GPS) RWY 22, Amdt 1.
Rocky Mount, NC, Rocky Mount-Wilson Rgnl, VOR/DME RWY 22, Amdt 3.
Norwich, NY, LT Warren Eaton, GPS RWY 1, Orig, CANCELLED.
Norwich, NY, LT Warren Eaton, RNAV (GPS) RWY 1, Orig.
Norwich, NY, LT Warren Eaton, RNAV (GPS) RWY 19, Orig.
Norwich, NY, LT Warren Eaton, VOR/DME RNAV OR GPS RWY 19, Amdt 2, CANCELLED.
Savannah, TN, Savannah-Hardin County, Takeoff Minimums and Obstacle DP, Amdt 3.
Rutland, VT, Rutland-Southern Vermont Rgnl, Takeoff Minimums and Obstacle DP, Amdt 3.
Morgantown, WV, Morgantown Muni-WLB Hart Field, RNAV (GPS) RWY 18, Amdt 2, CANCELLED.

Effective 27 AUG 2009

Akiak, AK, Akiak, AKIAK ONE Graphic Obstacle DP.
Akiak, AK, Akiak, Takeoff Minimums and Obstacle DP, Orig.
Allakaket, AK, Allakaket, Takeoff Minimums and Obstacle DP, Amdt 1.
Beaver, AK, Beaver, Takeoff Minimums and Obstacle DP, Orig.
Chalkyitsik, AK, Chalkyitsik, Takeoff Minimums and Obstacle DP, Orig.
Cold Bay, AK, Cold Bay, RNAV (GPS) RWY 14, Amdt 1.
Holy Cross, AK, Holy Cross, Takeoff Minimums and Obstacle DP, Amdt 2.
Kotlik, AK, Kotlik, Takeoff Minimums and Obstacle DP, Orig.
Russian Mission, AK, Russian Mission, Takeoff Minimums and Obstacle DP, Amdt 1.
Brinkley, AR, Frank Feeder Memorial, NDB–A, Amdt 2A, CANCELLED.
Albion, NE, Albion Muni, RNAV (GPS) RWY 33, Amdt 2.
New York, NY, La Guardia, VOR/DME–E, Amdt 2A, CANCELLED.
Reading, PA, Reading Rgnl/Carl A Spaatz Fld, GPS RWY 13, Orig-A, CANCELLED.
Reading, PA, Reading Rgnl/Carl A Spaatz Fld, GPS RWY 18, Orig-A, CANCELLED.
Reading, PA, Reading Rgnl/Carl A Spaatz Fld, ILS OR LOC RWY 13, Amdt 1.
Reading, PA, Reading Rgnl/Carl A Spaatz Fld, ILS OR LOC RWY 36, Amdt 30.
Reading, PA, Reading Rgnl/Carl A Spaatz Fld, RNAV (GPS) RWY 13, Orig.
Reading, PA, Reading Rgnl/Carl A Spaatz Fld, RNAV (GPS) RWY 18, Orig.
Reading, PA, Reading Rgnl/Carl A Spaatz Fld, RNAV (GPS) RWY 36, Orig.
Andrews, TX, Andrews County, GPS RWY 16, Orig-B, CANCELLED.
Andrews, TX, Andrews County, NDB RWY 16, Amdt 2A, CANCELLED.
Andrews, TX, Andrews County, RNAV (GPS) RWY 16, Orig.
Andrews, TX, Andrews County, Takeoff Minimums and Obstacle DP, Amdt 1.
Houston, TX, Lone Star Executive, RNAV (GPS) RWY 14, Orig.
Houston. TX, Sugar Land Rgnl, RNAV (GPS) RWY 17, Amdt 2.
Richmond/Ashland, VA, Hanover County Muni, Takeoff Minimums and Obstacle DP, Orig.
Winchester, VA, Winchester Regional, GPS RWY 14, Orig, CANCELLED.
Winchester, VA, Winchester Regional, ILS OR LOC RWY 32, Amdt 2.
Winchester, VA, Winchester Regional, RNAV (GPS) RWY 14, Orig.
Winchester, VA, Winchester Regional, RNAV (GPS) RWY 32, Orig.
Winchester, VA, Winchester Regional, VOR/DME–A, Amdt 5.
Clarksburg, WV, North Central West Virginia, RNAV (GPS) RWY 3, Orig.
Clarksburg, WV, North Central West Virginia, RNAV (GPS) RWY 21, Orig.

On May 28, 2009 (74 FR 101), the FAA published several Amendments in Docket No. 30667; Amdt No. 3222 to Part 97 of the Federal Aviation Regulations under section 97.33. The following entries are hereby rescinded originally published in TL 09–14 with an effective date of July 2, 2009:

Titusville, FL, Space Coast Regional, ILS OR LOC RWY 36, Amdt 11.
Titusville, FL, Space Coast Regional, RNAV (GPS) RWY 36, Orig.

[FR Doc. E9–14558 Filed 6–22–09; 8:45 am]

BILLING CODE 4910–13–P

ENVIRONMENTAL PROTECTION AGENCY

40 CFR Parts 51 and 59

[EPA–HQ–OAR–2006–0971; FRL–8920–7]

RIN 2060–AP33

National Volatile Organic Compound Emission Standards for Aerosol Coatings

AGENCY: Environmental Protection Agency (EPA).

ACTION: Final rule.

SUMMARY: This action amends the National Volatile Organic Compound Emission Standards for Aerosol Coatings (aerosol coatings reactivity rule), which establishes national reactivity-based emission standards for the aerosol coatings category (aerosol spray paints) under section 183(e) of the Clean Air Act. These amendments add compounds and associated reactivity factors to Table 2—Reactivity Factors based on petitions EPA received from regulated entities, and clarify which volatile organic compounds are to be quantified in compliance determinations. Additionally, this final rule makes certain changes related to the notice required for a company to certify that it will assume the responsibility for compliance with recordkeeping and reporting requirements for a regulated entity, and it also addresses which party is liable following such a certification. Further, in this action we make minor revisions and corrections to the aerosol coatings reactivity rule. Finally, in this action we are extending the deadline for submitting the initial notifications required in one section of the aerosol coatings regulations for 30 days, until July 31, 2009.

DATES: *Effective Date:* This final rule is effective on June 23, 2009.

ADDRESSES: EPA has established a docket for this action under Docket ID No. EPA–HQ–OAR–2006–0971. All documents in the docket are listed on the *http://www.regulations.gov* Web site. Although listed in the index, some information is not publicly available, *e.g.*, Confidential Business Information or other information whose disclosure is restricted by statute. Certain other material, such as copyrighted material, is not placed on the Internet and will be publicly available only in hard copy form. Publicly available docket materials are available either electronically through *http://www.regulations.gov* or in hard copy at the EPA Docket Center, Docket ID No. EPA–HQ–OAR–2006–0971, EPA/DC, EPA West, Room 3334, 1301 Constitution Ave., NW., Washington, DC. The Public Reading Room is open from 8:30 a.m. to 4:30 p.m., Monday through Friday, excluding legal holidays. The telephone number for the Public Reading Room is (202) 566–1744, and the telephone number for the Docket ID No. EPA–HQ–OAR–2006–0971 is (202) 566–9744.

FOR FURTHER INFORMATION CONTACT: For information concerning the aerosol coatings reactivity rule, contact Ms. J. Kaye Whitfield, U.S. EPA, Office of Air Quality Planning and Standards, Sector Policies and Programs Division, Natural Resources and Commerce Group (E143–03), Research Triangle Park, North Carolina 27711, telephone number: (919) 541–2509, facsimile number (919) 541–3470, e-mail address: *whitfield.kaye@epa.gov*. For information concerning the Clean Air Act (CAA) section 183(e) Consumer and Commercial Products Program, contact Mr. Bruce Moore, U.S. EPA, Office of Air Quality Planning and Standards, Sector Policies and Programs Division, Natural Resources and Commerce Group (E143–03), Research Triangle Park, North Carolina 27711, telephone number: (919) 541–5460, facsimile number (919) 541–3470, e-mail address: *moore.bruce@epa.gov*.

SUPPLEMENTARY INFORMATION:

Entities Potentially Affected by this Action. The entities potentially affected by this regulation encompass all steps in aerosol coatings operations. This includes manufacturers, processors, wholesale distributors and retailers who fall within the regulatory definition of ''distributor,'' importers of aerosol coatings for sale or distribution in the United States, and manufacturers, processors, wholesale distributors, and importers who supply the entities listed above with aerosol coatings for sale or distribution in interstate commerce in the United States. The entities potentially affected by this action include:

Category	NAICS code [a]	Examples of regulated entities
Paint and Coating Manufacturing	32551	Manufacturing of lacquers, varnishes, enamels, epoxy coatings, oil and alkyd vehicle, plastisols, polyurethane, primers, shellacs, stains, water repellant coatings.
All Other Miscellaneous Chemical Production and Preparation Manufacturing.	325998	Aerosol can filling, aerosol packaging services.

[a] North American Industry Classification System *http://www.census.gov/epcd/www/naics.html.*

This table is not intended to be exhaustive, but rather provides a guide for readers regarding entities likely to be affected by this action. To determine whether you would be affected by this action, you should examine the applicable industry description in section I.E of the promulgation preamble, published at 73 FR 15604 (March 24, 2008). If you have any questions regarding the applicability of this action to a particular entity, consult the appropriate EPA contact listed in the **FOR FURTHER INFORMATION CONTACT** section of this notice.

Docket. The docket number for the National Volatile Organic Compound Emission Standards for Aerosol Coatings (40 CFR parts 59 and 51, subpart E) is Docket ID No. EPA–HQ–OAR–2006–0971.

World Wide Web (WWW). In addition to being available in the docket, an electronic copy of this action will also be available on the WWW through the Technology Transfer Network (TTN). Following signature, a copy of the action will be posted on the TTN's policy and guidance page for newly proposed or promulgated rules at the following address: *http://www.epa.gov/ttn/oarpg/.* The TTN provides information and technology exchange in various areas of air pollution control.

Judicial Review. Under section 307(b)(1) of the CAA, judicial review of the final rule is available only by filing a petition for review in the U.S. Court of Appeals for the District of Columbia Circuit by August 24, 2009. Under CAA section 307(b)(2), the requirements established by this final action may not be challenged separately in any civil or criminal proceedings brought by EPA to enforce these requirements.

Section 307(d)(7)(B) of the CAA further provides that ''only an objection to a rule or procedure which was raised with reasonable specificity during the period for public comment (including any public hearing) may be raised during judicial review.'' This section also provides a mechanism for EPA to convene a proceeding for reconsideration, ''if the person raising the objection can demonstrate to EPA that it was impracticable to raise such an objection [within the period for public comment] or if the grounds for such objection arose after the period for public comment (but within the time specified for judicial review) and if such objection is of central relevance to the outcome of the rule.'' Any person seeking to make such a demonstration to EPA should submit a Petition for Reconsideration to the Office of the Administrator, U.S. EPA, Room 3000, Ariel Rios Building, 1200 Pennsylvania Ave., NW., Washington, DC 20460, with a copy to both the person(s) listed in the preceding **FOR FURTHER INFORMATION CONTACT** section, and the Air and Radiation Law Office, Office of General Counsel (Mail Code 2344A), U.S. EPA, 1200 Pennsylvania Ave., NW., Washington, DC 20004.

Organization of This Document. The information presented in this action is organized as follows:

I. Background
II. Summary of the Final Standards and Changes Since Proposal
A. Amendments to Tables 2A, 2B, and 2C—Reactivity Factors
B. Clarification to Part 59, Subpart E
C. The Certification Process for the Assumption of Recordkeeping and Reporting Obligations
D. Liability Following § 59.511(g) Certification
E. Other Revisions
F. Extension of Deadline for Initial Notifications and Finding and Statement of Good Cause
G. Basis for Making This Rule Effective on the Date of Publication
III. Response to Significant Comments
A. Table 2 to Subpart E of Part 59—Reactivity Factors
B. Assumption of Responsibility for Recordkeeping and Reporting
C. Form of the § 59.511(g) Notice
D. Liability Following § 59.511(g) Certification
E. Other
IV. Summary of Impacts
A. Environmental Impacts
B. Energy Impacts
C. Cost and Economic Impacts
V. Statutory and Executive Order Reviews
A. Executive Order 12866: Regulatory Planning and Review
B. Paperwork Reduction Act
C. Regulatory Flexibility Act
D. Unfunded Mandates Reform Act
E. Executive Order 13132: Federalism
F. Executive Order 13175: Consultation and Coordination With Indian Tribal Governments
G. Executive Order 13045: Protection of Children From Environmental Health and Safety Risks
H. Executive Order 13211: Actions Concerning Regulations That Significantly Affect Energy Supply, Distribution or Use
I. National Technology Transfer and Advancement Act
J. Executive Order 12898: Federal Actions To Address Environmental Justice in Minority Populations and Low-Income Populations
K. Congressional Review Act

I. Background

On March 24, 2008, EPA published national emission standards for aerosol spray paints under section 183(e) of the CAA (73 FR 15604, which are codified in the Code of Federal Regulations (CFR) at 40 CFR part 59, subpart E (sections 59.500–59.516)). Section 183(e) of the CAA requires the control of volatile organic compounds (VOC) emissions from certain categories of consumer and commercial products for purposes of reducing VOC emissions contributing to ozone formation and nonattainment of the ozone national ambient air quality standards. States have previously promulgated rules for aerosol spray paints based upon

reductions of VOC by mass and by relative reactivity. EPA concluded that a national rule based upon the relative reactivity approach achieves more reduction in ozone formation than may be achieved by a mass-based approach for this specific product category. The final aerosol coatings rule revised EPA's regulatory definition of VOC to include certain compounds that would otherwise be exempt, in order to account for all reactive compounds in aerosol coatings that contribute to ozone formation. Therefore, certain compounds that would not be VOC under the otherwise applicable definition count towards the applicable reactivity limits under the aerosol coatings regulation.

Originally, the compliance date for the action, as established in the rule (73 FR 15604), was January 1, 2009. Regulated entities were required to submit initial notification 90 days in advance of the compliance date; in this case, initial notifications were due on October 1, 2008.

Subsequently, on December 24, 2008, EPA published amendments (73 FR 78994) to the rule to move the applicability and initial compliance dates for aerosol coatings from January 1, 2009, to July 1, 2009, and make initial notifications due on the compliance date, as opposed to 90 days in advance of the compliance date. These changes were necessary to (1) allow EPA time to conduct this rulemaking, and add compounds (and their associated reactivity factors) that are currently used in aerosol coatings, but were not included in Tables 2A, 2B, or 2C; and (2) allow regulated entities sufficient time to develop initial notifications based on the revised tables.

The rule (73 FR 15604) also has a provision in § 59.511(j) that allows regulated entities to petition EPA to add compounds to Tables 2A, 2B, and 2C—Reactivity Factors of subpart E, 40 CFR part 59. One of this final action's objectives is to address petitions filed under this provision.

II. Summary of the Final Amendments and Changes Since Proposal

A. Amendments to Table 2A to Subpart E of Part 59—Reactivity Factors

In this action, EPA is finalizing the addition of 128 compounds and their reactivity factors to Table 2A in response to petitions received in accordance with § 59.511(j) of the rule. EPA also is adding Chemical Abstract Service (CAS) numbers for each compound or class of compounds listed in Table 2A to make it easier for regulated entities to find a specific chemical. In Table 2A of the proposed rule (72 FR 38951), EPA did not list CAS numbers for two entries: ''C8 Disubstituted Benzenes'' and ''C9 Styrenes.'' In this final rule, in response to inquiries from affected entities, EPA has added CAS numbers for these entries and listed chemical synonyms for selected entries. The reactivity factors for these compounds have not been changed. The final Table 2A lists ''C8 Disubstituted Benzenes (xylenes, mixed isomers)'' with CAS 1330–20–7 and RF 7.48, and ''C9 styrenes (vinyl toluene, mixed isomers)'' with CAS 25013–15–4 and RF 1.72. The final Table 2A is sorted in order of CAS number.

B. Clarification to Part 59, Subpart E

In the aerosol coatings reactivity rule, we amended the definition of VOC in 40 CFR 51.100(s) for the purposes of determining compliance with the regulation (as described in 40 CFR part 59—National Volatile Organic Compound Emission Standards for Consumer and Commercial Products) so that any organic compound in the volatile portion of an aerosol coatings is counted towards the product's reactivity-based limit. However, the text of § 51.100(s)(7) adopted in the March 24, 2008, rule was not clear that compounds listed in both §§ 51.100(s)(1) and 51.100(s)(5) were to be counted as VOC for determining compliance. In this final action, we are changing the previously amended definition of VOC in part 51 to clarify that compounds that are excluded from the definition of VOC under both 40 CFR 51.100(s)(1) and (s)(5) are to be counted as VOC for the purposes of determining compliance with the aerosol coatings reactivity rule in 40 CFR part 59, subpart E.

C. The Certification Process for the Assumption of Recordkeeping and Reporting Obligations

As provided in §§ 59.501(b)(4), 59.510(b) and 59.511(g), a manufacturer, importer or distributor may choose to certify that it will assume the responsibility of maintaining records and submitting reports required under this subpart for a regulated entity. To assume that responsibility, the entity making the certification submits a document as described in § 59.511(g). In this action, EPA will finalize the following amendments to § 59.511(g):

EPA is amending § 59.511(g) to call the certification document a ''notice'' rather than a ''report.'' EPA is finalizing this change because it believes that the word ''notice'' is a more accurate word to describe the document.

EPA is finalizing a method to ensure that both the certifying entity and the regulated entity have full knowledge of what responsibilities are being assumed by the certifying entity. Specifically, EPA is amending § 59.511(g) to provide that the certifying entity will sign the § 59.511(g) notice and then send the notice to EPA and to the regulated entity. EPA has concluded that this method will provide the right balance between (1) making the burden of providing the certification notice reasonable, so as not to discourage manufacturers and others from taking on the recordkeeping and reporting obligations of regulated entities, and (2) making sure that both parties are aware of what responsibilities the certifying entity is assuming from the regulated entity as a result of the notice.

In this final action, § 59.511(g)(3) will be amended to provide a more detailed description of what responsibilities are being assumed by the certifying entity and other related information about the division of responsibility between the certifying entity and regulated entity, and how the recordkeeping and reporting requirements will be met. Specifically, certification notices will be required to include identification of the products covered by the notice and the location or locations where the records will be maintained, among the other information required.

EPA is adding a provision to § 59.511(g) (to be numbered (g)(4)) requiring that the certifying document contain a statement that the certifying entity understands that the failure to fulfill the responsibilities that it is assuming may result in an enforcement action against it.

EPA is revising the provision that was § 59.511(g)(4) and will now appear in § 59.511(g)(5) to clarify that the certification notice must be signed by the responsible official for the certifying entity. Before this revision, the provision required the signature of the responsible official for ''the company'' which did not clearly identify the certifying entity as the entity signing the notice.

In addition to these amendments to § 59.511(g), EPA is amending certain provisions related to the notices in § 59.511(g):

EPA is adding the word ''distributors'' to § 59.501(b)(4) to make clear that distributors as well as manufacturers and importers can be a certifying entity. The language currently in § 59.501(b)(4) only refers to ''manufacturers and importers,'' while the language in § 59.511(g) refers to ''manufacturers, importers and distributors.'' This amendment will make these two

provisions consistent and avoid any confusion as to whether distributors may be a certifying entity.

EPA is amending § 59.510(b) to replace the phrase ''certifying manufacturer'' with ''certifying entity'' in order to make clear that § 59.510(b) applies to all certifying entities and not just those certifying entities who are manufacturers.

EPA requested comment on whether the 59.511(g) notice should be a certain form or contain certain language to fulfill the requirements of this section. Based on the comments received, the EPA is not imposing any specific language or format for the certification notices in the final rule. However, EPA intends to work with interested parties to develop an optional model for the certification notices. Further, EPA reserves the right to take action in the future if the Agency in the future determines that particular language or format should be a requirement we will propose amendments to the rule.

D. Liability Following § 59.511(g) Certification

This final rule allows a party referred to in this rule as the ''certifying entity,'' to assume certain recordkeeping and reporting requirements from a regulated entity. However, EPA believes it is essential to ensure that the recordkeeping and reporting responsibilities are fulfilled after this transfer occurs. To that end, in this final rule, both the certifying entity and regulated entity will have joint liability for the recordkeeping and reporting requirements covered by a notice submitted under § 59.511(g), such that both would be liable for the failure to keep records or submit reports and for inaccurate records or reports.

E. Other Revisions

Finally, in this action, we are finalizing minor revisions and edits to include corrections to EPA regional office addresses, and several minor changes and corrections to Table 2A. Specifically, we are finalizing the deletion for the listing for Di (2-ethylhexyl phthalate) (CAS 117–81–7) for which there is no applicable reactivity factor; eliminate a duplicate listing of Butanol (CAS 71–36–3); and correcting the CAS number for Isobutane (CAS 75–28–5) and the reactivity factor for Ethylene Glycol Monobutyl Ether [2-Butoxyethanol] (CAS 111–76–2). Given the multiple ways to name individual organic compounds, in this action, Table 2A has been sorted according to CAS number to make it easier for regulated entities to find a specific chemical.

III. Response to Significant Comments

During the public comment period, we received a total of three comment letters. A summary of all comments received on this rule, as well as complete responses to each of these comments are presented in the docket (EPA–HQ–OAR–2006–0971).

A. Table 2 to Subpart E of Part 59—Reactivity Factors

Comment: One commenter expressed concern about the time required to add chemical compounds to Table 2, given that reactivity factors may have to be updated in the future based on current research efforts by leading scientists.

Another commenter requested that the Table 2A values for four compounds be replaced with more recently determined values. The commenter states that obtaining ozone reduction benefits from the proposed reactivity based aerosol coatings rule requires that the reactivity factors assigned to the regulated compounds accurately represent how efficiently they form ozone. The commenter believes that the assigned reactivity factors are ''certainly and significantly in error,'' with the largest magnitude errors for compounds whose maximum incremental reactivity (MIR) values were upper limit MIR values.

Response: The commenters raise two important processes that will continue to require periodic regulatory action into the future: (1) The addition of compounds to Table 2, including those compounds for which reactivity factors have already been proposed by EPA, or are in use by other authorities (e.g., California Air Resources Board (CARB)) for this source category, and (2) the revision of the reactivity factors in Table 2 to reflect our evolving understanding of photochemical ozone formation.

The first issue, the addition of compounds to Table 2A for which reactivity factors have been established, is the main focus of this rulemaking. When EPA promulgated the final rule on March 24, 2008 (73 FR 15604), EPA anticipated the need to add compounds to Table 2, especially prior to the initial compliance date for the rule. Affected parties were encouraged to request additions to Table 2 by June 1, 2008, to ensure that the compounds were added prior to the initial compliance date. On December 24, 2008 (73 FR 78994), the compliance date was extended from October 1, 2008, to July 1, 2009. In this current rulemaking, we have responded to all of the requests for additions that we received prior to the April 2, 2009, proposal. Even after that date, EPA has continued to receive requests to add compounds to Table 2. We expect that the number of requests to add compounds will decline as regulated entities work to come into compliance with the new rule. However, EPA recognizes that there will be a continuing need to add compounds to Table 2 into the future as new compounds are identified for use in this source category.

The addition of compounds to Table 2 must be accomplished through formal rulemaking with opportunities for public comment. Given the resources involved in formal rulemaking, EPA does not believe that it is appropriate for the Agency to respond to each petition for addition of compounds with a separate rulemaking as we receive them. Therefore, EPA intends to issue a rulemaking addressing additions to Table 2, as appropriate.

The second action, updating the reactivity factors to reflect the evolving scientific information is beyond the scope of the current rulemaking. The reactivity scale used in both EPA's and CARB's aerosol coatings rules is based on the 2000 version of Carter's Maximum Incremental Reactivity (MIR) scale.[1] Since 2000, Carter has updated the MIR scale a number of times to incorporate new information about chemical reaction mechanisms and rates, and to incorporate new compounds. The commenter points to Carter's very recent update of the MIR scale completed in March 2009.[2] This analysis was completed for CARB, and CARB has not formally adopted these values to determine compliance with their aerosol coatings regulation.

At this time, the reactivity factors in EPA's Table 2 are consistent with those values used by CARB in its aerosol coatings regulation. We believe the reactivity factors currently in Table 2 should be retained to maintain consistency and stability of both CARB and EPA's reactivity-based regulations.

EPA recognizes that current reactivity factors may need to be revised in the future to reflect the most recent scientific information. Before adding new compounds or updating reactivity values for existing compounds in Table 2 through formal rulemaking procedures, EPA will ensure that the supporting data will have undergone appropriate scientific review. Before pursuing such a rulemaking, EPA will

[1] Carter, W.P.L., Additions and Corrections to the SAPRC–99 Maximum Incremental Reactivity (MIR) Scale, prepared for California Air Resources Board Contract No. 97–314, November 29, 2000.

[2] Carter, W.P.L. (2009) Updated Maximum Incremental Reactivity Scale for Regulatory Applications, prepared for California Air Resources Board, Contract 07–339, March 23, 2009.

work with CARB to determine an appropriate timeline and process for incorporating changes to the reactivity factors used in both our regulations and to determine, where appropriate and necessary, whether changes to the reactivity-based limits in those regulations should be made as well.

B. Assumption of Responsibility for Recordkeeping and Reporting

Comment: One commenter opposed adding a provision to § 59.511(g) requiring that the certification notice contain a statement that upon assuming the recordkeeping and reporting requirements in the rule, the certifying entity understands that the failure to fulfill these requirements may result in an enforcement action against it. The commenter stated that this statement is unnecessary because the regulations are clear that a certifying entity's election to maintain records and fulfill reporting requirements for a regulated entity is a regulatory requirement and that, as with any other regulatory requirement, failure to fulfill these requirements carries with it a regulatory penalty in the form of enforcement activity. The commenter further states that adding this regulatory requirement creates additional regulatory requirements and another potential violation in the event that the required statement is missing from a certifying entity's notice.

Response: EPA agrees that the current regulations provide that a certifying entity's notice that it will assume recordkeeping and reporting requirements for a regulated entity imposes a regulatory requirement on that certifying entity that could result in an enforcement action against it if the requirements are not met. However, EPA believes that the inclusion of an express statement to that effect in the certification notice under § 59.511(g) will assure that each entity signing a certification notice is aware of the potential consequences for failing to meet the obligations that it is taking on by signing the certification notice, even if the entity has not carefully read the regulations. Finally, neither this commenter nor anyone else has identified any substantial burden that will arise from including such a statement in the certification notice.

Comment: EPA received a comment opposing EPA's proposal to add language to § 59.511(g)(3) to clarify the responsibilities of the certifying entity. As the basis for their opposition, this commenter noted that the regulations indicate that ''any or all'' of the recordkeeping and reporting requirements can be assumed, and that certifying entities must be clear about the extent of the recordkeeping and reporting that they will assume. The commenter stated that there will be instances where several different manufacturers will make products for a single customer, in which case the manufacturer (the certifying entity) must clearly state which products or product lines they are assuming the recordkeeping and reporting responsibilities for. With such a clear statement of the certifying entity, the customer (the regulated entity) will then be able to take steps to be sure that any other products that are being made for it by other manufacturers are the subject of a § 59.511(g) notice from the appropriate manufacturer.

Response: The scenario described by this commenter—where a given regulated entity gets products from multiple suppliers, and so any certification notices from those suppliers must clearly state which products are covered by the notice—is exactly why EPA concludes that § 59.511(g)(3) should expressly require that the certification notice include an ''identification of the products covered by the notice.'' This identification of the scope of each certification notice will allow the regulated entity to determine which products are covered by certification notices (and, thus, are products for which the recordkeeping and reporting obligations will be fulfilled by a certifying entity) and which products have recordkeeping and reporting obligations that are still the responsibility of the regulated entity. Similarly, EPA will be able to review the notices and determine who has the recordkeeping and reporting responsibilities for the various products. Conversely, a certification notice that does not clearly identify the products covered by the notice will create confusion and ambiguity for all parties.

Comment: With respect to the alternative options for assuring that both the certifying entity and the regulated entity are aware of their responsibilities for recordkeeping and reporting following a certification notice, one commenter recommends that the certifying entity be required to send the § 59.511(g) notice to the regulated entity when it is submitted to EPA. The commenter supports this recommendation by explaining that, with this approach, the regulated entity will have the notice in its records, and the certifying entity will be able to comply with § 59.511(g) without waiting for a reply from the regulated entity. If the certifying entity sends the regulated entity a notice regarding these responsibilities, then both parties will have full knowledge of the responsibilities being assumed by the certifying entity. The alternative option proposed by EPA—to have both parties sign the certification notice before it is submitted to EPA—would be burdensome, according to the commenter. In support of this conclusion, the commenter gave the example of one manufacturer who makes products for over 400 different customers, and stated that obtaining the signature of all of these customers would be ''an overwhelming proposition.'' The commenter further notes that most manufacturers make private label products for customers and will be in the position of maintaining the records and fulfilling the reporting obligations for their customers.

Response: In choosing between the two options proposed, EPA has balanced the conflicting goals of (1) making the burden of providing the certification notice reasonable, so as not to discourage manufacturers and others from taking on the recordkeeping and reporting obligations of regulated entities, and (2) making sure that both parties are aware of what responsibilities are being shifted as a result of the notice. Although having both parties sign the notice fulfills the second goal, EPA's conclusion is that the option of having the certifying entity sign the notice and then send it to the regulated entity will provide the right balance between these two goals. In making this decision, EPA notes the following points in addition to the points discussed above. First, part of EPA's original basis for allowing certifying entities to assume the recordkeeping and reporting obligations was that the certifying entity may be able to fulfill the obligations more accurately, and with less burden than the regulated entity. This point is supported by one of this commenter's points on another issue: that it is the manufacturers who have the data and information that must be kept and reported (a point that commenters make in discussing their opposition to the joint liability of certifying entities and regulated entities, which is discussed below). Second, at the point in time when the certifying entity submits the certification notice to EPA with a copy to the regulated entity, the certifying entity becomes responsible for the recordkeeping and reporting requirements covered by the notice, even before the notice reaches the regulated entity. Thus, any lack of communications between the certifying entity and the regulated entity in advance of the notice being sent might result in some initial duplication of

effort, but will not result in any gap of recordkeeping and reporting.

C. Form of the § 59.511(g) Notice

Comment: EPA received comment that § 59.511(g) indicates the essential elements that must be included in the notice, and that these elements are clear and fairly concise. This commenter suggests that it is not necessary to require a specific form or format. Finally, the commenter states it is willing to work with EPA on a format that is acceptable to the Agency and user-friendly for the industry.

Response: At this time, EPA is not imposing any specific language or format for the certification notices, and intends to work with the commenter and other interested parties to develop an optional model for the certification notices. EPA may however, propose further amendments to the rule in the future if the Agency determines that particular language or format should be a requirement.

D. Liability Following § 59.511(g) Certification

Comment: One commenter does not believe that any additional language should be added regarding joint liability for the recordkeeping and reporting under § 59.511(g). The commenter states that, in most cases, all the data that needs to be maintained and reported is in the hands of the certifying entity. According to the commenter, the regulated entity, even if it wanted to, would not be able to fulfill the recordkeeping and reporting responsibilities. Because of this practical limitation, the commenter urges EPA to reject any additional language which imposes joint liability for a failure in the recordkeeping and reporting functions under § 59.511.

Response: Joint liability is a common enforcement approach under the CAA. Here, EPA believes that joint liability is essential to ensure that the recordkeeping and reporting responsibilities are fulfilled. This joint liability gives regulated entities the appropriate incentive to rely only on reputable parties to fulfill their recordkeeping and reporting responsibilities.

E. Other

Comment: EPA received comments from one commenter in a cover letter and through the resubmission of comments submitted in response to the July 16, 2007, proposed rule, ''National Volatile Organic Compound Emission Standards for Aerosol Coatings'' (40 CFR parts 51 and 59, subpart E; 72 FR 38952).

Response: With respect to the resubmission of its 2007 comments document, EPA took final action on the proposed rule on March 24, 2008 (40 CFR parts 51 and 59, subpart E; 73 FR 15621), and responded to the comments at that time. Moreover, the 2007 comments do not apply to the issues being considered in the current rulemaking.

Comment: In its cover letter, the commenter above makes three points. The first two points criticize statements that EPA made in its November 2007 Response to Comments document (which was prepared for the March 2008 final rule) and address issues that are outside the scope of the current rulemaking.

Finally, the commenter makes one point that specifically addresses the current rulemaking. The commenter states that EPA is significantly expanding the number of compounds on Table 2A in this rulemaking, and that this is a major change that should lead EPA to reconsider the fundamental approach that this regulation is taking. Specifically, the commenter contends that the rule will not achieve real ozone reductions in the areas that need the reductions, and that the rule encourages the substitution of hazardous air pollutants for other compounds used in aerosol coatings.

Response: With respect to the commenter's 2007 comments and the two comments that criticize aspects of EPA's November 2007 response to comments document, EPA will not address those comments here because they are outside the scope of this rulemaking. With respect to the comment that this rulemaking is a significant expansion of the rule that warrants a reconsideration of the fundamental approach in the March 24, 2008, final action, EPA does not dispute that this rulemaking is expanding the number of compounds on Table 2A, but the Agency disagrees that this is a major change in the rule, or a significant expansion of the scope of the rule that raises the issues that the commenter seeks to have EPA reconsider. Finally, EPA notes that CAA section 307(d)(7)(B) provides the proper vehicle for a person seeking reconsideration of issues from a past rule, and the commenter here has neither stated that it is proceeding under this provision nor explained why it believes it meets the threshold requirements for such reconsideration.

Comment: Another commenter requested a statement in the final rule that addresses the ''harmonization'' of CARB and US EPA MIR values, since both have either promulgated or proposed aerosol coatings rules that use these values.

Response: EPA agrees with the commenter that, in general, maintaining consistency between the reactivity factors used by EPA and CARB is important for the efficient and effective implementation of EPA and CARB's reactivity-based regulations. In developing this current regulation, EPA has made an effort to make the requirements as consistent as possible with the requirements of CARB's aerosol coatings regulation within the limits of our authority and responsibilities under the CAA. EPA and CARB's rules, however, are promulgated under different statutory authorities through separate formal rulemaking processes in different regulatory agencies; so, some differences can be expected. The reactivity factors that are currently included in EPA's rule are consistent with the reactivity values currently applied in CARB's aerosol coatings regulation. As discussed in Section III.A., EPA recognizes that the current reactivity factors may need to be revised in the future to reflect the evolving scientific information. As stated previously, before adding new compounds or updating reactivity values for existing compounds in Table 2 through formal rulemaking procedures, EPA will ensure that the supporting data will have undergone appropriate scientific review. Also, before pursuing such a revision, EPA will work with CARB to determine an appropriate timeline and process for incorporating changes to the reactivity factors used in both our regulations and to determine, where appropriate and necessary, whether changes to the reactivity-based limits in those regulations should be made as well.

F. 30-Day Extension of Deadline for Initial Notifications and Finding and Statement of Good Cause

In this final rule, EPA is extending the deadline for the initial notifications required under Section 59.511(b) for 30 days, until July 31, 2009. This extension is being granted without the notice and comment proceedings described in Section 307(d)(3) of the Clean Air Act for good cause, as authorized under Section 307(d)(1).[3]

[3] Under Section 307(d)(1), in the text that appears after the list of actions to which Section 307(d) applies, the statute provides that the requirements of Section 307(d) do not apply ''in the case of any rule or circumstance referred to in subparagraphs (A) or (B) of subsection 553(b) of Title 5.'' Section 553(b)(B) of Title 5 provides that notice and comment proceedings are not required ''when the agency for good cause finds (and incorporates that the finding and a brief statement of reasons thereof in the rule[ ] issued) that notice and public

EPA finds that good cause exists to extend the deadline for initial notifications by 30 days without notice and comment proceedings because (1) the amendments made in this rule affect the initial notifications under 59.511(b) and the certification notices allowed under Section 59.511(g) (which for practical reasons need to be submitted at or before the deadline for initial notifications), and (2) these amendments are being promulgated a short time before the previous deadline for initial notifications of July 1, 2009. Given these circumstances, the Agency has concluded that it would not be fair or in the public interest to require regulated entities to submit the initial notifications by July 1, 2009, or to expect those entities who are electing to submit certification notices to do so by July 1, 2009.

The Agency finds that good cause is shown here on the grounds that notice and comment proceedings are unnecessary. Courts have recognized that notice and comment is ''unnecessary'' where the rule is ''a minor rule or amendment in which the public is not particularly interested.'' *Texaco, Inc* v. *Federal Power Comm.,* 412 F.2d 740, 743 n.6 (3d Cir 1969) (quoting Attorney General's Manual on Administrative Act (1947) at 12–13). See also *Utility Solid Waste Activities Group* v. *EPA,* 236 F.3d 749, 755 (D.C. Cir. 2001) (''unnecessary'' applies to ''those situations in which the administrative rule is a routine determination, insignificant in nature and impact, and inconsequential to the industry and to the public.''); *Northern Arapahoe Tribe* v. *Hodel,* 808 F.2d 741, 751 (10th Cir. 1987) (' 'Unnecessary' means unnecessary so far as the public is concerned, as would be the case if a minor or merely technical amendment in which the public is not particularly interested were involved.'') (quoting S. Rep. No. 752, 79th Cong., 1st Sess. 14 (1945)). Here, EPA finds that the extension of the deadline for submitting initial notifications by 30 days is a minor amendment in which the public is not particularly interested because (1) it does not affect the compliance date for the rule, (2) it only affects the date by which EPA will receive certain reports from regulated entities, and (3) the extension of 30 days is short.[4] For these reasons, EPA finds that it has good cause to extend this deadline without notice and comment proceedings.

G. Basis for Making This Rule Effective on the Date of Publication

Section 553(d) of the Administrative Procedure Act (APA), 5 U.S.C. 553(b), generally provides that rules may not take effect earlier than 30 days after they are published in the **Federal Register**. However, EPA is issuing this final rule under section 307(d)(1) of the Clean Air Act, which states:

''The provisions of section 553 through 557 * * * of Title 5 shall not, except as expressly provided in this section, apply to actions to which this subsection applies.'' Thus, section 553(d) of the APA does not apply to this rule. EPA is nevertheless acting consistently with the policies underlying APA section 553(d) in making this rule effective on June 23, 2009. APA section 553(d)(3) provides an exception when the agency finds good cause exists for a period less than 30 days before effectiveness. We find good cause exists to make this rule effective upon publication because doing so alleviates potential confusion and implementation difficulties that could arise if these amendments were not in effect until 30 days after the date of publication. For example, the extension of the deadline for initial notifications needs to become effective before July 1, 2009 to avoid confusion and implementation difficulties.

IV. Summary of Impacts

This section presents a summary of the impacts expected as a result of this rule.

A. Environmental Impacts

There are no adverse environmental impacts anticipated from compliance with this rule.

B. Energy Impacts

There are no adverse energy impacts anticipated from compliance with this rule.

C. Cost and Economic Impacts

There are no adverse economic impacts anticipated from compliance with this rule.

V. Statutory and Executive Order Reviews

A. Executive Order 12866: Regulatory Planning and Review

Under Executive Order (EO) 12866 (58 FR 51735, October 4, 1993), this action is a ''significant regulatory action'' that raises novel legal or policy issues arising out of legal mandates, the President's priorities, or the principles set forth in the EO. Accordingly, EPA submitted this action to the Office of Management and Budget (OMB) for review under EO 12866 and any changes made in response to OMB recommendations have been documented in the docket for this action.

B. Paperwork Reduction Act

This action does not impose any new information collection burden; it only proposes amendments and minor corrections to the aerosol coatings reactivity rule by adding compounds and associated reactivity factors to Table 2—Reactivity Factors based on petitions EPA received from regulated entities; and clarifies which VOC are to be quantified in compliance determinations. Additionally, certain changes are being made related to the notice required for a company to certify that it will assume the responsibility for compliance with recordkeeping and reporting requirements for a regulated entity, and who is liable following such certification. Finally, in this action we make minor revisions and corrections to the aerosol coatings reactivity rule.

However, the OMB has previously approved the information collection requirements contained in the existing regulations, *i.e.,* the National Volatile Organic Compound Emission Standards for Aerosol Coatings, 40 CFR parts 51 and 59, subpart E (73 FR 15604, March 24, 2008) under the provisions of the *Paperwork Reduction Act,* 44 U.S.C. 3501 *et seq.* and has assigned OMB control number 2060–0617. The OMB control numbers for EPA's regulations in 40 CFR are listed in 40 CFR part 9.

C. Regulatory Flexibility Act

The Regulatory Flexibility Act (RFA) generally requires an agency to prepare a regulatory flexibility analysis of any rule subject to notice and comment rulemaking requirements under the Administrative Procedure Act or any other statute unless the agency certifies that the rule will not have a significant economic impact on a substantial number of small entities. Small entities include small businesses, small organizations, and small governmental jurisdictions.

For purposes of assessing the impacts of this rule on small entities, small entity is defined as: (1) A small business as defined by the Small Business Administration's (SBA) regulations at 13 CFR 121.201; (2) a small governmental jurisdiction that is a government of a city, county, town, school district or special district with a population of less than 50,000; and (3) a small

procedure thereon are impracticable, unnecessary, or contrary to public interest.''

[4] EPA further notes that when the Agency previously proposed a seven-month extension of the compliance date in November 2008, it received only one comment. See 73 FR 78,994, 78,995 (col. 2) (December 24, 2008). Because this significantly longer extension of the compliance date (not just the deadline for certain reports) resulted in only one comment, and because of the nature of that comment (*see* 73 FR at 78,992), EPA concludes that a notice and comment proceeding to extend the deadline for submitting initial notifications would not likely result in any comments.

organization that is any not-for-profit enterprise which is independently owned and operated and is not dominant in its field.

After considering the economic impacts of this rule on small entities, I certify that this action will not have a significant economic impact on a substantial number of small entities. This rule will not impose any new requirements on small entities. We have determined that small businesses will not incur any adverse impacts because EPA is only making minor corrections and amendments to the Aerosol Coatings rule, and these corrections and amendments do not create any new requirements or burdens. No costs are associated with these amendments. We continue to be interested in the potential impacts of the rule on small entities and welcome comments on issues related to such impacts.

D. Unfunded Mandates Reform Act

This rule does not contain a Federal mandate that may result in expenditures of $100 million or more for State, local, and Tribal governments, in the aggregate, or the private sector in any one year. This action only makes amendments and minor corrections to the aerosol coatings reactivity rule by adding compounds and associated reactivity factors to Table 2—Reactivity Factors based on petitions EPA received from regulated entities; and clarifies which VOC are to be quantified in compliance determinations. Additionally, certain changes are being made related to the notice required for a company to certify that it will assume the responsibility for compliance with recordkeeping and reporting requirements for a regulated entity, and who is liable following such certification. Finally, in this action we make minor revisions and corrections to the aerosol coatings reactivity rule. Thus, this rule is not subject to the requirements of sections 202 or 205 of the Unfunded Mandates Reform Act (UMRA).

This rule is also not subject to the requirements of section 203 of UMRA because it contains no regulatory requirements that might significantly or uniquely affect small governments. It only proposes amendments and minor corrections to the aerosol coatings reactivity rule by adding compounds and associated reactivity factors to Table 2—Reactivity Factors based on petitions EPA received from regulated entities; and clarifies which volatile organic compounds are to be quantified in compliance determinations. Additionally, certain changes are being made related to the notice required for a company to certify that it will assume the responsibility for compliance with recordkeeping and reporting requirements for a regulated entity, and who is liable following such certification. Finally, in this action we make minor revisions and corrections to the aerosol coatings reactivity rule.

E. Executive Order 13132: Federalism

EO 13132, entitled ''Federalism'' (64 FR 43255, August 10, 1999), requires EPA to develop an accountable process to ensure ''meaningful and timely input by State and local officials in the development of regulatory policies that have Federalism implications.'' ''Policies that have Federalism implications'' is defined in the EO to include regulations that have ''substantial direct effects on the States, on the relationship between the national government and the States, or on the distribution of power and responsibilities among the various levels of government.''

This rule does not have Federalism implications. It will not have substantial direct effects on the States, on the relationship between the national government and the States, or on the distribution of power and responsibilities among the various levels of government, as specified in EO 13132. This action only makes amendments and minor corrections to the aerosol coatings reactivity rule by adding compounds and associated reactivity factors to Table 2—Reactivity Factors based on petitions EPA received from regulated entities; and clarifies which VOC are to be quantified in compliance determinations. Additionally, certain changes are being made related to the notice required for a company to certify that it will assume the responsibility for compliance with recordkeeping and reporting requirements for a regulated entity, and who is liable following such certification. Finally, in this action we make minor revisions and corrections to the aerosol coatings reactivity rule.

Thus, EO 13132 does not apply to this rule.

In the spirit of EO 13132, and consistent with EPA policy to promote communications between EPA and State and local governments, EPA specifically solicits comment on this rule from State and local officials.

F. Executive Order 13175: Consultation and Coordination With Indian Tribal Governments

This action does not have tribal implications, as specified in EO 13175 (65 FR 67249, November 9, 2000). This action only makes amendments and minor corrections to the aerosol coatings reactivity rule by adding compounds and associated reactivity factors to Table 2—Reactivity Factors based on petitions EPA received from regulated entities; and clarifies which VOC are to be quantified in compliance determinations. Additionally, certain changes are being made related to the notice required for a company to certify that it will assume the responsibility for compliance with recordkeeping and reporting requirements for a regulated entity, and who is liable following such certification. Finally, in this action we make minor revisions and corrections to the aerosol coatings reactivity rule. Thus, EO 13175 does not apply to this action.

G. Executive Order 13045: Protection of Children From Environmental Health and Safety Risks

EPA interprets EO 13045 (62 FR 19885, April 23, 1997) as applying only to those regulatory actions that concern health or safety risks, such that the analysis required under section 5–501 of the EO has the potential to influence the regulation. This action is not subject to EO 13045 because it does not establish an environmental standard intended to mitigate health or safety risks.

H. Executive Order 13211: Actions Concerning Regulations That Significantly Affect Energy Supply, Distribution, or Use

This action is not a ''significant energy action'' as defined in EO 13211 (66 FR 28355 (May 22, 2001)), because it is not likely to have a significant adverse effect on the supply, distribution, or use of energy. Further, we have concluded that this rule is not likely to have any adverse energy effects because it only makes amendments and minor corrections to the aerosol coatings reactivity rule by adding compounds and associated reactivity factors to Table 2—Reactivity Factors based on petitions EPA received from regulated entities; and clarifies which VOC are to be quantified in compliance determinations. Additionally, certain changes are being made related to the notice required for a company to certify that it will assume the responsibility for compliance with recordkeeping and reporting requirements for a regulated entity, and who is liable following such certification. Finally, in this action we make minor revisions and corrections to the aerosol coatings reactivity rule.

I. National Technology Transfer and Advancement Act

Section 12(d) of the National Technology Transfer and Advancement

Act of 1995 (''NTTAA''), Public Law No. 104–113, 12(d) (15 U.S.C. 272 note) directs EPA to use voluntary consensus standards in its regulatory activities unless to do so would be inconsistent with applicable law or otherwise impractical. Voluntary consensus standards are technical standards (*e.g.,* materials specifications, test methods, sampling procedures, and business practices) that are developed or adopted by voluntary consensus standards bodies. NTTAA directs EPA to provide Congress, through OMB, explanations when the Agency decides not to use available and applicable voluntary consensus standards.

This rulemaking does not involve technical standards. Therefore, EPA is not considering the use of any voluntary consensus standards.

J. Executive Order 12898: Federal Actions To Address Environmental Justice in Minority Populations and Low-Income Populations

EO 12898 (59 FR 7629 (Feb. 16, 1994)) establishes Federal executive policy on environmental justice. Its main provision directs Federal agencies, to the greatest extent practicable and permitted by law, to make environmental justice part of their mission by identifying and addressing, as appropriate, disproportionately high and adverse human health or environmental effects of their programs, policies, and activities on minority populations and low-income populations in the United States.

EPA has concluded that it is not practicable to determine whether there would be disproportionately high and adverse human health or environmental effects on minority and/or low income populations from this rule. The rule only makes amendments and minor corrections to the aerosol coatings reactivity rule by adding compounds and associated reactivity factors to Table 2—Reactivity Factors based on petitions EPA received from regulated entities; and clarifies which VOC are to be quantified in compliance determinations. Additionally, certain changes are being made related to the notice required for a company to certify that it will assume the responsibility for compliance with recordkeeping and reporting requirements for a regulated entity, and who is liable following such certification. Finally, in this action we make minor revisions and corrections to the aerosol coatings reactivity rule.

K. Congressional Review Act

The Congressional Review Act, 5 U.S.C. 801 *et seq.,* as added by the Small Business Regulatory Enforcement Fairness Act of 1996, generally provides that before a rule may take effect, the agency promulgating the rule must submit a rule report, which includes a copy of the rule, to each House of the Congress and to the Comptroller General of the United States. The EPA will submit a report containing the final rule amendment and other required information to the U.S. Senate, the U.S. House of Representatives, and the Comptroller General of the United States prior to publication of this final rule amendment in the **Federal Register.** The final rule amendment is not a ''major rule'' as defined by 5 U.S.C. 804(2). This final rule is effective on June 23, 2009.

List of Subjects

40 CFR Part 51

Environmental protection, Administrative practice and procedure, Air pollution control, Carbon monoxide, Intergovernmental relations, Lead, Nitrogen dioxide, Ozone, Particulate matter, Reporting and recordkeeping requirements, Sulfur oxides, Volatile organic compound, Consumer products, Aerosol products, Aerosol coatings, Consumer and commercial products.

40 CFR Part 59

Environmental protection, Administrative practice and procedure, Air pollution control, Incorporation by reference, Intergovernmental relations, Reporting and recordkeeping requirements.

Dated: June 15, 2009.

Lisa P. Jackson,

Administrator.

■ For the reasons set out in the preamble, parts 51 and 59 of title 40, Chapter I of the Code of Federal Regulations are amended as follows:

PART 51—[AMENDED]

■ 1. The authority citation for part 51 continues to read as follows:

Authority: 23 U.S.C. 101; 42 U.S.C 7401–7671q.

■ 2. Section 51.100(s)(7) is revised to read as follows:

§ 51.100 Definitions.

* * * * *

(s) * * *

(7) For the purposes of determining compliance with EPA's aerosol coatings reactivity based regulation (as described in 40 CFR part 59—National Volatile Organic Compound Emission Standards for Consumer and Commercial Products) any organic compound in the volatile portion of an aerosol coating is counted towards the product's reactivity-based limit, as provided in 40 CFR part 59, subpart E. Therefore, the compounds that are used in aerosol coating products and that are identified in paragraphs (s)(1) or (s)(5) of this section as excluded from EPA's definition of VOC are to be counted towards a product's reactivity limit for the purposes of determining compliance with EPA's aerosol coatings reactivity-based national regulation, as provided in 40 CFR part 59, subpart E.

* * * * *

PART 59—[AMENDED]

■ 3. The authority citation for part 59 continues to read as follows:

Authority: 42 U.S.C 7414 and 7511b(e).

■ 4. Section 59.501 is amended by revising paragraph (b)(4) and the first sentence of paragraph (f)(3)(i) to read as follows:

§ 59.501 Am I subject to this subpart?

* * * * *

(b) * * *

(4) If you are a manufacturer, importer, or distributor, you can choose to certify that you will provide any or all of the recordkeeping and reporting requirements of §§ 59.510 and 59.511 by following the procedures of § 59.511(g) and (h).

* * * * *

(f) * * *

(3) * * *

(i) You must submit an initial notification no later than July 31, 2009, or on or before the date that you start manufacturing aerosol coating products that are sold in the United States, whichever is later. * * *

* * * * *

■ 5. Section 59.510 is amended by revising paragraph (b) to read as follows:

§ 59.510 What records am I required to maintain?

* * * * *

(b) By providing the written certification to the Administrator in accordance with § 59.511(g), the certifying entity accepts responsibility for compliance with the recordkeeping requirements of this section with respect to any products covered by the written certification, as detailed in the written certification. Failure to maintain the required records may result in enforcement action by EPA against the certifying entity in accordance with the enforcement provisions applicable to violation of these provisions by regulated entities. If the certifying entity revokes its certification, as allowed by § 59.511(h), the regulated entity must

assume responsibility for maintaining all records required by this section.

■ 6. Section 59.511 is amended as follows:

■ a. By revising the first sentence in paragraph (b) introductory text.

■ b. By revising the first sentence of paragraph (e) introductory text.

■ c. By revising paragraph (g) introductory text.

■ d. By revising paragraphs (g)(3) and (g)(4).

■ e. By adding paragraph (g)(5).

§ 59.511 What notifications and reports must I submit?

* * * * *

(b) You must submit an initial notification no later than July 31, 2009, or on or before the date that you first manufacture, distribute, or import aerosol coatings, whichever is later.* * *

* * * * *

(e) If you claim the exemption under § 59.501(e), you must submit an initial notification no later than July 31, 2009, or on or before the date that you first manufacture aerosol coatings, whichever is later. * * *

* * * * *

(g) If you are a manufacturer, importer, or distributor who chooses to certify that you will maintain records for a regulated entity for all or part of the purposes of § 59.510 and this section, you must submit a notice to the appropriate EPA Regional Office listed in § 59.512. At the same time that this notice is sent to the appropriate EPA Regional Office, a copy of the notice must be sent to the regulated entity for which you are accepting responsibility for recordkeeping and reporting requirements. After the certifying entity submits this notice to the appropriate EPA Regional Office, both the certifying entity and the regulated entity are liable for any failure to keep records or submit records and for any inaccurate records or reports covered by the notice, and one or both may be subject to an enforcement action in accordance with the enforcement provisions applicable to violation of these provisions. This notice must include the information contained in paragraphs (g)(1) though (g)(5) of this section.

* * * * *

(3) Description of specific requirements in § 59.510 and this section for which you are assuming responsibility and explanation of how all required information under this subpart will be maintained and submitted, as required, by you or the regulated entity; including identification of the products covered by the notice and the location or locations where the records will be maintained;

(4) A statement that the certifying entity understands that the failure to fulfill the responsibilities that it is assuming may result in an enforcement action against it in accordance with the enforcement provisions applicable to violation of these provisions by regulated entities; and

(5) The signature of the responsible official for the certifying entity.

* * * * *

■ 7. Section 59.512 is amended by revising the addresses for EPA Regions I, IV, VII, and VIII to read as follows:

§ 59.512 Addresses of EPA regional offices.

* * * * *

EPA Region I (Connecticut, Maine, Massachusetts, New Hampshire, Rhode Island, Vermont), Director, Office of Environmental Stewardship, 1 Congress St., Suite 1100, Boston, MA 02114–2023.

* * * * *

EPA Region IV (Alabama, Florida, Georgia, Kentucky, Mississippi, North Carolina, South Carolina, Tennessee), Director, Air Pesticides and Toxics, Management Division, Atlanta Federal Center, 61 Forsyth Street, SW., Atlanta, GA 30303–3104.

* * * * *

EPA Region VII (Iowa, Kansas, Missouri, Nebraska), Director, Air Toxics Division, 901 North 5th Street, Kansas City, KS 66101.

EPA Region VIII (Colorado, Montana, North Dakota, South Dakota, Utah, Wyoming), Director, Air and Toxics Division, 1595 Wynkoop Street, Denver, CO 80202–1129.

* * * * *

■ 8. Table 2A to subpart E of part 59—Reactivity Factors is revised to read as follows:

TABLE 2A TO SUBPART E OF PART 59—REACTIVITY FACTORS

Compound	CAS No.	Reactivity factor
Formaldehyde	50–00–0	8.97
Glycerol (1,2,3-Propanetriol)	56–81–5	3.27
Propylene Glycol	57–55–6	2.75
Ethanol	64–17–5	1.69
Formic Acid	64–18–6	0.08
Acetic Acid	64–19–7	0.71
Methanol	67–56–1	0.71
Isopropyl Alcohol (2-Propanol)	67–63–0	0.71
Acetone (Propanone)	67–64–1	0.43
n-Propanol (n-Propyl Alcohol)	71–23–8	2.74
n-Butyl Alcohol (Butanol)	71–36–3	3.34
n-Pentanol (Amyl Alcohol)	71–41–0	3.35
Benzene	71–43–2	0.81
1,1,1-Trichloroethane	71–55–6	0.00
Propane	74–98–6	0.56
Vinyl Chloride	75–01–4	2.92
Acetaldehyde	75–07–0	6.84
Methylene Chloride (Dichloromethane)	75–09–2	0.07
Ethylene Oxide	75–21–8	0.05
Isobutane	75–28–5	1.35
HFC-152A (1,1-Difluoroethane)	75–37–6	0.00
Propylene Oxide	75–56–9	0.32
t-Butyl Alcohol	75–65–0	0.45
Methyl t-Butyl Ketone	75–97–8	0.78
Isophorone (3,5,5-Trimethyl-2-Cyclohexenone)	78–59–1	10.58
Isopentane	78–78–4	1.68

TABLE 2A TO SUBPART E OF PART 59—REACTIVITY FACTORS—Continued

Compound	CAS No.	Reactivity factor
Isobutanol	78–83–1	2.24
2-Butanol (s-Butyl Alcohol)	78–92–2	1.60
Methyl Ethyl Ketone (2-Butanone)	78–93–3	1.49
Monoisopropanol Amine (1-Amino-2-Propanol)	78–96–6	13.42
Trichloroethylene	79–01–6	0.60
Propionic Acid	79–09–4	1.16
Acrylic Acid	79–10–7	11.66
Methyl Acetate	79–20–9	0.07
Nitroethane	79–24–3	12.79
Methacrylic Acid	79–41–4	18.78
a-Pinene (Pine Oil)	80–56–8	4.29
Methyl Methacrylate	80–62–6	15.84
Naphthalene	91–20–3	3.26
Xylene, ortho-	95–47–6	7.49
o-Cresol	95–48–7	2.34
1,2,4-Trimethylbenzene	95–63–6	7.18
3-Pentanone	96–22–0	1.45
Methyl Ethyl Ketoxime (Ethyl Methyl Ketone Oxime)	96–29–7	22.04
gamma-Butyrolactone	96–48–0	1.15
Ethyl Lactate	97–64–3	2.71
Isobutyl Isobutyrate	97–85–8	0.61
Isobutyl Methacrylate	97–86–9	8.99
Butyl Methacrylate	97–88–1	9.09
PCBTF (p-Trifluoromethyl-Cl-Benzene)	98–56–6	0.11
Cumene (Isopropyl Benzene)	98–82–8	2.32
a-Methyl Styrene	98–83–9	1.72
Ethyl Benzene	100–41–4	2.79
Styrene	100–42–5	1.95
Benzaldehyde	100–52–7	0.00
Triethanolamine	102–71–6	2.76
2-Ethyl-Hexyl Acetate	103–09–3	0.79
2-Ethyl-Hexyl Acrylate	103–11–7	2.42
2-Ethyl-1-Hexanol (Ethyl Hexyl Alcohol)	104–76–7	2.20
Ethyl Propionate	105–37–3	0.79
s-Butyl Acetate	105–46–4	1.43
n-Propyl Propionate	106–36–5	0.93
Xylene, para-	106–42–3	4.25
p-Dichlorobenzene	106–46–7	0.20
Dimethyl Succinate	106–65–0	0.23
1,2-Epoxybutane (Ethyl Oxirane)	106–88–7	1.02
n-Propyl Bromide	106–94–5	0.35
Butane	106–97–8	1.33
1,3-Butadiene	106–99–0	13.58
Ethylene Glycol	107–21–1	3.36
2–Methyl-2,4-Pentanediol	107–41–5	1.04
Isohexane Isomers	107–83–5	1.80
Methyl n-Propyl Ketone (2-Pentanone)	107–87–9	3.07
Propylene Glycol Monomethyl Ether (1-Methoxy-2-Propanol)	107–98–2	2.62
n,n-Dimethylethanolamine	108–01–0	4.76
1-Nitropropane	108–03–2	16.16
Vinyl Acetate	108–05–4	3.26
Methyl Isobutyl Ketone	108–10–1	4.31
Isopropyl Acetate	108–21–4	1.12
Propylene Carbonate (4-Methyl-1,3-Dioxolan-2one)	108–32–7	0.25
Xylene, meta-	108–38–3	10.61
Propylene Glycol Monomethyl Ether Acetate (1-Methoxy-2-Propyl Acetate)	108–65–6	1.71
1,3,5-Trimethyl Benzene	108–67–8	11.22
Di-Isobutyl Ketone (2,6-Dimethyl-4-Heptanone)	108–83–8	2.94
Methylcyclohexane	108–87–2	1.99
Toluene	108–88–3	3.97
Monochlorobenzene	108–90–7	0.36
Cyclohexanol	108–93–0	2.25
Cyclohexanone	108–94–1	1.61
n-Butyl Butyrate	109–21–7	1.12
Propyl Acetate	109–60–4	0.87
Pentane	109–66–0	1.54
Ethylene Glycol Monomethyl Ether (2-Methoxyethanol)	109–86–4	2.98
Tetrahydrofuran	109–99–9	4.95
Methyl Isoamyl Ketone (5-Methyl-2-Hexanone)	110–12–3	2.10
Isobutyl Acetate	110–19–0	0.67
Methyl Amyl Ketone	110–43–0	2.80

TABLE 2A TO SUBPART E OF PART 59—REACTIVITY FACTORS—Continued

Compound	CAS No.	Reactivity factor
Hexane	110–54–3	1.45
n-Propyl Formate	110–74–7	0.93
2-Ethoxyethanol	110–80–5	3.78
Cyclohexane	110–82–7	1.46
Morpholine	110–91–8	15.43
Dipropylene Glycol	110–98–5	2.48
Ethylene Glycol Monoethyl Ether Acetate (2-Ethoxyethyl Acetate)	111–15–9	1.90
Diethylenetriamine	111–40–0	13.03
Diethanolamine	111–42–2	4.05
Diethylene Glycol	111–46–6	3.55
n-Octane	111–65–9	1.11
2-Butoxy-1-Ethanol (Ethylene Glycol Monobutyl Ether)	111–76–2	2.90
Diethylene Glycol Methyl Ether (2-(2-Methoxyethoxy) Ethanol)	111–77–3	2.90
n-Nonane	111–84–2	0.95
2-(2-Ethoxyethoxy) Ethanol	111–90–0	3.19
Ethylene Glycol Monobutyl Ether Acetate (2-Butoxyethyl Acetate)	112–07–2	1.67
2-(2-Ethoxyethoxy) Ethyl Acetate	112–15–2	1.50
2-(2-Butoxyethoxy)-Ethanol	112–34–5	2.70
Dimethyl Ether	115–10–6	0.93
Triethylamine	121–44–8	16.60
2-Phenoxyethanol; Ethylene Glycol Phenyl Ether	122–99–6	3.61
Diacetone Alcohol	123–42–2	0.68
2,4-Pentanedione	123–54–6	1.02
Butanal	123–72–8	6.74
Butyl Acetate, n	123–86–4	0.89
2-(2-Butoxyethoxy) Ethyl Acetate	124–17–4	1.38
2-Amino-2-Methyl-1-Propanol	124–68–5	15.08
Perchloroethylene	127–18–4	0.04
Ethanolamine	141–43–5	5.97
Ethyl acetate	141–78–6	0.64
Heptane	142–82–5	1.28
n-Hexyl Acetate (Hexyl Acetate)	142–92–7	0.87
2-Ethyl Hexanoic Acid	149–57–5	4.41
1,2,3-Trimethyl Benzene	526–73–8	11.26
t-Butyl Acetate	540–88–5	0.20
Methyl Isobutyrate	547–63–7	0.70
Methyl Lactate	547–64–8	2.75
Methyl Propionate	554–12–1	0.71
1,2 Butanediol	584–03–2	2.21
n-Butyl Propionate	590–01–2	0.89
Methyl n-Butyl Ketone (2-Hexanone)	591–78–6	3.55
Ethyl Isopropyl Ether	625–54–7	3.86
Dimethyl Adipate	627–93–0	1.95
Methy n-Butyl Ether	628–28–4	3.66
Amyl Acetate (Pentyl Ethanoate, Pentyl Acetate)	628–63–7	0.96
Ethyl n-Butyl Ether	628–81–9	3.86
Ethyl t-Butyl Ether	637–92–3	2.11
1,3-Dioxolane	646–06–0	5.47
Ethyl-3-Ethoxypropionate	763–69–9	3.61
Methyl Pyrrolidone (n-Methyl-2-Pyrrolidone)	872–50–4	2.56
Dimethyl Gluterate	1119–40–0	0.51
C8 Disubstituted Benzenes (xylenes, mixed isomers)	1330–20–7	7.48
Ethylene Glycol 2-Ethylhexyl Ether [2-(2-Ethylhexyloxy) Ethanol]	1559–35–9	1.71
Propylene Glycol Monopropyl Ether (1-Propoxy-2-Propanol)	1569–01–3	2.86
Propylene Glycol Monoethyl Ether (1-Ethoxy-2-Propanol)	1569–02–4	3.25
2-Methoxy-1-Propanol	1589–47–5	3.01
Methyl t-Butyl Ether	1634–04–4	0.78
Ethylcyclohexane	1678–91–7	1.75
Isoamyl Isobutyrate	2050–01–3	0.89
2-Propoxyethanol (Ethylene Glycol Monopropyl Ether)	2807–30–9	3.52
n-Butoxy-2-Propanol	5131–66–8	2.70
d-Limonene (Dipentene or Orange Terpene)	5989–27–5	3.99
Dipropylene Glycol Methyl Ether Isomer (2-[2Methoxypropoxy]-1-Propanol)	13588–28–8	3.02
C9 Styrenes (Vinyl Toluene, mixed isomers)	25013–15–4	1.72
Texanol (1,3 Pentanediol, 2,2,4-Trimethyl, 1-Isobutyrate)	25265–77–4	0.89
Isodecyl Alcohol (8-Methyl-1-Nonanol)	25339–17–7	1.23
Tripropylene Glycol Monomethyl Ether	25498–49–1	1.90
Glycol Ether DPNB (1-(2-Butoxy-1-Methylethoxy) 2-Propanol)	29911–28–2	1.96
Propylene Glycol t-Butyl Ether (1-tert-Butoxy-2-Propanol)	57018–52–7	1.71
2-Methoxy-1-Propyl Acetate	70657–70–4	1.12
Oxo-Heptyl Acetate	90438–79–2	0.97

TABLE 2A TO SUBPART E OF PART 59—REACTIVITY FACTORS—Continued

Compound	CAS No.	Reactivity factor
2-tert-Butoxy-1-Propanol	94023–15–1	1.81
Oxo-Octyl Acetate	108419–32–5	0.96

[FR Doc. E9–14580 Filed 6–22–09; 8:45 am]

BILLING CODE 6560–50–P

FEDERAL COMMUNICATIONS COMMISSION

47 CFR Parts 74 and 78

[WT Docket No. 02–55; ET Docket Nos. 00–258, 95–18; FCC 09–49]

Relocation of 2 GHz Broadcast Auxiliary Service

AGENCY: Federal Communications Commission.

ACTION: Final rule.

SUMMARY: In this document the Commission waives the deadline by which Sprint Nextel must complete relocation of the broadcast auxiliary service (BAS) to frequencies above 2025 MHz until February 8, 2010. The Commission also eliminates the requirement that MSS entrants to the 2000–2020 MHz band may not begin operations until the BAS incumbents in the top 30 markets by population and all fixed BAS links in the 1990–2025 MHz band have been relocated. MSS entrants will be allowed to conduct operations in markets where the BAS incumbents have not been relocated only if they successfully coordinate with the BAS incumbents. In addition, the Commission waives the requirement that New ICO Satellite Services G.P. must first make available to the public commercial satellite service throughout its satellite's coverage area before it may commercially operate Ancillary Terrestrial Service (ATC) in conjunction with it satellite system.

DATES: Effective July 23, 2009.

FOR FURTHER INFORMATION CONTACT: Nicholas Oros, (202) 418–0636, e-mail *Nicholas.Oros@fcc.gov.*

SUPPLEMENTARY INFORMATION: This is a summary of the Commission's Report and Order and Order, WT Docket No. 02–55, ET Docket Nos. 00–258 and 95–18, FCC 09–49, adopted June 10, 2009, and released June 12, 2009. The full text of the document is available on the Commission's Internet site at *http://www.fcc.gov.* It is also available for inspection and copying during regular business hours in the FCC Reference Center (Room CY–A257), 445 12th St., SW., Washington, DC 20554. The full text may also be purchased from the Commission's duplication contractor, Best Copy and Printing Inc., Portals II, 445 12th St., SW., Room CY–B402, Washington, DC 20554, telephone (202) 488–5300; fax (202) 488–5563; e-mail *FCC@BCPIWEB.com.*

Summary of the Report and Order and Order

1. In this Report and Order and Order, the Commission waives the deadline by which Sprint Nextel must complete relocation of the broadcast auxiliary service (BAS) to frequencies above 2025 MHz until February 8, 2010. The BAS incumbents are being relocated so that new entrants such as the Mobile Satellite Service (MSS), Advanced Wireless Service (AWS), and Sprint Nextel can provide new and innovative services. In 2004, Sprint Nextel undertook the obligation to relocate the BAS incumbents within 30 months—i.e. by September 7, 2007. In March 2008 the Commission waived the BAS transition deadline until March 5, 2009. On February 12, 2009, Sprint Nextel, the Association for Maximum Service Television (MSTV), the National Association of Broadcasters (NAB), and the Society of Broadcast Engineers (SBE) filed a supplemental request that the BAS transition deadline be waived until February 7, 2010.

2. The Commission concludes that waiver of the BAS relocation deadline until February 8, 2010 is in the public interest for a number of reasons. The timely relocation of BAS licensees remains a necessary step for the full introduction of new services in the 1990–2025 MHz band, and Sprint Nextel remains the sole entity actively undertaking such relocations. No commenter has suggested an alternate plan by which BAS licensees can be relocated quicker in order to give new entrants full and complete access to the band. The pace of the BAS transition is constrained by the small number of manufacturers who make the BAS equipment, a shortage of qualified equipment installers and tower climbers, and coordination problems between the new radio equipment and preexisting controllers. The Commission concludes that a fair reading of the overall record indicates that Sprint Nextel has made considerable progress in the BAS relocation process that has proven to be a more complex undertaking than any party may have initially anticipated.

3. Further delays in BAS transition will frustrate our goal of providing opportunity for new entrants to begin offering service in the band and the Commission fully intends to take all necessary steps to ensure that the BAS licensees, Sprint Nextel, and the MSS operators act to complete the BAS relocation process in a timely manner. While the Commission intends to exercise appropriate enforcement action if Sprint Nextel is not able to complete the BAS transition by February 8, 2010 for reasons it could have reasonably avoided, we also believe that there should be appropriate consequences for BAS licensees for failure to complete the relocation by the new deadline. In the accompanying Further Notice, the Commission considers further modifying the BAS relocation rules to allow new entrants to begin unencumbered operations in the band before all BAS operations are relocated. The Commission also emphasize that, under existing relocation rules, MSS operators have an absolute responsibility to protect incumbent BAS licensees, and that it will consider taking vigorous enforcement action against any violations of this rule. Furthermore, the Commission reminds BAS licensees that under the Commission's rules they have an obligation to negotiate in good faith with Sprint Nextel and the other new entrants relocation agreements for the 1990–2025 MHz band. If a party believes that another party, whether a BAS licensee or a new entrant, is not negotiating in good faith, it may petition the Commission for a declaratory ruling.

4. As proposed in a March 2008 Further Notice of Proposed Rulemaking in this docket, in this Report and Order and Order the Commission also eliminates the requirements in §§ 74.690(e)(1)(i) and 78.40(f)(1)(i) of the Commission's Rules that MSS entrants relocate all BAS licensees in Nielsen Designated Market areas 1–30, as they existed on September 6, 2000, and all fixed BAS stations operating in the band on a primary basis prior to beginning

operations. Eliminating these requirements will allow the benefits of MSS—such as public safety service during disasters when terrestrial communications networks may be compromised and increased competition in wireless communications through the provision of new and unique mobile services—to be provided to the public sooner than what the rules currently allow. The delays in the relocation of BAS have increased the importance of finding opportunities that can allow MSS operators to begin to deploy robust commercial services.

5. The Commission recognizes that allowing the MSS entrants to operate on cleared spectrum before they have satisfied their cost sharing obligations to Sprint Nextel is a departure from prior Commission decisions on this issue. Nonetheless, the Commission concludes that, given the unique circumstances in this case, our decision to allow the MSS entrants to begin operations in the near term, before they may have satisfied their cost sharing reimbursement obligations, best serves the public interest. The Commission want to be clear, though, that our decision to allow the MSS entrants to begin operations before they may have satisfied their cost sharing obligations to Sprint Nextel in no way relieves them of these obligations. A guiding principle for relocation is that those entrants that benefit from cleared spectrum have an obligation to shoulder their portion of the costs to relocate incumbent operations. The Commission fully intends to apply that principle here, as set forth in the accompanying Further Notice.

6. The Commission also retains the rule that BAS licensees maintain primary status until they are relocated, decline relocation, or the BAS relocation rules sunset on December 13, 2013. The Commission also has not modified the requirement for MSS entrants to relocate the incumbent BAS licensees in markets 31–100 within three years of beginning operations and the remaining BAS licensees within five years.

7. The Commission's decision to modify §§ 74.690(e)(1)(i) and 78.40(f)(1)(i) makes it vital for us to effectively manage the interference environment during the period in which both MSS entrants and incumbent BAS licensees occupy the band. During the pendency of the BAS transition, BAS incumbents are primary in the band until they are relocated, they refuse relocation, or the relocation rules sunset on December 9, 2013. The Commission imposes the following requirements to protect the primary BAS operations: First, MSS entrants will be required to successfully coordinate any operations in nonrelocated markets with BAS incumbents in those markets prior to beginning service. Second, MSS entrants are prohibited from marketing their services to customers in markets where the BAS transition has not been completed. Third, the Commission prohibits MSS entrants from operating ATC networks in markets where the BAS transition is not complete.

8. Interference may also occur to BAS incumbents from MSS mobile terminals operating adjacent to markets where the BAS transition has not been completed. To address this possibility, the Commission has determined that MSS mobile terminals may not operate within line-of-sight of BAS receiver sites in markets where the BAS transition has not been completed, unless such use has been coordinated between the MSS operator and BAS licensee. In addition, the Commission will not allow the MSS entrants to operate ATC equipment within line-of-sight of a BAS receiver site for a market which has not been transitioned. MSS transponders must also accept any interference caused by BAS operations in uncleared markets.

9. The Commission expects BAS incumbents to act cooperatively to accommodate good faith proposals for MSS operation in markets where the BAS incumbents have not been relocated. Because not all BAS receive site information is available in the Commission's licensing databases, it expects BAS licensees to disclose to MSS the locations of these sites upon request in order to facilitate coordination. While the Commission believes that there may be instances where individual BAS licensees may be able to adjust the channels or bandwidth on which they operate or make other adjustments to accommodate MSS operations, the Commission emphasizes that BAS incumbents are not expected to agree to coordination proposals that would impair their ability to meet the electronic newsgathering needs of a particular market at a particular time or that would delay the scheduled relocation of BAS. To a certain extent, the Commission disagrees with MSTV and NAB that BAS operations should never reduce bandwidth or cease channel operation, if doing so is agreed to as part of coordination. However, the Commission does not expect broadcasters to retune or modify equipment to accommodate MSS when that equipment is already scheduled to be replaced, unless it will not divert resources from the BAS transition. The Commission will not permit an MSS entrant to approach the BAS incumbents in a particular market to coordinate operations until sixty days before the MSS entrant expects to provide commercial service in that market.

10. The Commission also determined that an MSS entrant will be required to coordinate with fixed BAS links that overlap the spectrum it will be using. Where the MSS entrant and BAS licensee determine by mutual agreement that harmful interference to the BAS fixed link will not occur, the MSS entrant will be able to operate in that market. It may not be possible in some cases for the MSS entrant to operate without causing interference to the fixed BAS link. In these situations, the MSS entrant will have to relocate the fixed BAS link before it may operate in that market.

11. New ICO Satellite Services G.P. (ICO), which has recently changed its name to New DBSD Satellite Services G.P., has been granted authority to operate ATC in conjunction with its satellite system conditioned on its commercial satellite service being available to the public throughout its satellite's coverage area, as required by § 25.149(b)(3). However, ICO can not satisfy this requirement until the BAS transition is complete because it may not market MSS where the BAS incumbents have not been relocated. ICO has requested a waiver of this requirement to allow it to begin ATC operations prior to the end of the BAS transition. The Commission grants ICO a limited waiver of this requirement, pending completion of the BAS transition. Once ICO begins to commercially offer satellite service in a market in which the BAS transition has been completed, ICO will be permitted to operate ATC in that market. Once the BAS transition has been completed, ICO may operate ATC service throughout its coverage area, provided that it is also offering commercial satellite service throughout its coverage area. The Commission also delegated authority to the Commission's International Bureau to grant a similar waiver to MSS operator TerreStar Networks Inc., if such a waiver is necessary.

Final Regulatory Flexibility Analysis

12. As required by the Regulatory Flexibility Act of 1980, as amended (RFA),[1] an Initial Regulatory Flexibility Analysis (IRFA) was incorporated in the

[1] *See* 5 U.S.C. 603. The RFA, *see* 5 U.S.C. 601–612, has been amended by the Small Business Regulatory Enforcement Fairness Act of 1996 (SBREFA), Public Law 104–121, Title II, 110 Stat. 857 (1996).

Further Notice of Proposed Rule Making (FNPRM).[2] The Commission sought written public comment on the proposals in the FNPRM, including comment on the IRFA.[3] No commenting parties specifically addressed the IRFA.[4] This present Final Regulatory Flexibility Analysis (FRFA) conforms to the RFA.[5]

A. Need for, and Objectives of, the Proposed Rules

13. In this Report and Order and Order, we eliminate the rule requiring that BAS in the top 30 markets by population and all fixed BAS links be transitioned before 2 GHz MSS operators may begin operations.[6] This rule change is necessary because of the changed circumstances since the rule was first adopted. When the rule was adopted the MSS entrants were the only new entrants to the band and were expected to relocate BAS in the top 30 markets before they could begin operations. Sprint Nextel and future AWS licensees have subsequently been allocated spectrum in the band. Sprint Nextel was expected to relocate the BAS incumbents by September 7, 2007. However, the BAS transition has been delayed and Sprint Nextel is now required to relocate BAS by February 8, 2010. Despite the fact that BAS incumbents have been relocated in many markets, the top 30 market rule continues to prevent the MSS entrants from beginning operations anywhere—even in markets where the spectrum is currently not being used. Elimination of the top 30 market rule will allow the benefits from MSS—such as public safety service during disasters when terrestrial networks may be compromised and increased competition wireless services—to be provided sooner.

14. Because BAS is a critical part of the broadcasting system by which information and entertainment is provided to the American public, the Report and Order and Order implements a number of requirements to help prevent interference to nonrelocated BAS incumbents from MSS until the transition is complete. The MSS entrants will only be permitted to operate in markets where the BAS incumbents have not been relocated if the MSS entrants successfully coordinate with the BAS incumbents. This coordination requirement also applies to MSS operations in a market where BAS has been relocated that are within line-of-sight of BAS receiver sites in adjacent markets that have not yet been transitioned. Furthermore, to simplify the coordination process, MSS will not be able to operate ATC systems or market services to customers in markets where the BAS incumbents have not been relocated.[7]

B. Summary of Significant Issues Raised by Public Comments in Response to the IRFA

15. There were no comments filed that specifically addressed the rules and policies proposed in the IRFA.

C. Description and Estimate of the Number of Small Entities to Which the Proposed Rules Will Apply

16. The RFA directs agencies to provide a description of and, where feasible, an estimate of the number of small entities that may be affected by the proposed rules, if adopted.[8] The RFA generally defines the term ''small entity'' as having the same meaning as the terms ''small business,'' ''small organization,'' and ''small governmental jurisdiction.'' [9] In addition, the term ''small business'' has the same meaning as the term ''small business concern'' under the Small Business Act.[10] A small business concern is one which: (1) Is independently owned and operated; (2) is not dominant in its field of operation; and (3) satisfies any additional criteria established by the SBA.[11]

17. The proposed rule modifications may affect the interest of BAS, LTTS, and CARS licensees (which we have been referring to throughout this document generically as ''BAS'') because these licensees are being relocated from the 1990–2025 MHz band by the new entrants. In addition, the rule modifications will affect the interest of the new entrants to the 1990–2025 MHz band: MSS, Sprint Nextel, and future AWS entrants to the band.

18. *BAS.* This service uses a variety of transmitters to relay broadcast programming to the public (through translator and booster stations) or within the program distribution chain (from a remote news gathering unit back to the stations). The BAS licensees in the 1990–2110 MHz band will ultimately be required to use only the 2020–2110 MHz portion of that band. It is unclear how many of the BAS licensees will be affected by our new rules.

19. The Commission has not developed a definition of small entities specific to BAS licensees. However, the U.S. Small Business Administration (SBA) has developed small business size standards. For BAS, we use the size standard for Television Broadcasting.[12] The SBA has developed a size standard for firms in this category, which is all firms having revenues less than $14 million. The only data which we have available for this category are for when the SBA size standard was for firms having revenues of less than $13.5 million. According to Commission staff review of the BIA Publications, Inc. Master Access Television Analyzer Database (BIA) on March 30, 2007, about 986 of an estimated 1,374 commercial television stations [13] (or approximately 72 percent) have revenues of $13.5 million or less and thus qualify as small entities under the SBA definition. Thus, under this standard, the majority of firms can be considered small.

20. *CARS.* The CARS licensees in the 1990–2110 MHz band will ultimately be required to use only the 2020–2110 MHz portion of that band. CARS licenses are issued to the owners or operators of cable television systems, cable networks, licensees of the BRS/EBS band, and private cable operators or other multichannel video programming distributors.[14] It is unclear how many of these will be affected by our new rules.

21. *Cable Television Distribution Services.* Since 2007, these services have been defined within the broad economic census category of Wired

[2] *See* Improving Public Safety Communications in the 800 MHz Band; Consolidating the 900 MHz Industrial/Land Transportation and Business Pool Channels, WT Docket No. 02–55, *Notice of Proposed Rulemaking,* 17 FCC Rcd 4873, 4927 (2002) (NPRM).

[3] *See id.* at 4920 ¶ 93.

[4] Business Autophones, Inc., Comments on IRFA (May 6, 2002) Skitronics, LLC, Comments on IRFA (May 6, 2002); Small Business in Telecommunications, Comments on IRFA (May 6, 2002).

[5] *See* 5 U.S.C. 604.

[6] The Report and Order and Order also waive the deadline by which Sprint Nextel must relocate the BAS incumbents until February 8, 2010.

[7] The Report and Order and Order does waive the commercial availability ATC gating requirement for ICO. This will allow ICO to operate ATC systems in transitioned BAS markets prior to its satellite service being available throughout its coverage area.

[8] 5 U.S.C. 603(b)(3).

[9] 5 U.S.C. 601(6).

[10] 5 U.S.C. 601(3) (incorporating by reference the definition of ''small business concern'' in 15 U.S.C. 632). Pursuant to the RFA, the statutory definition of a small business applies ''unless an agency, after consultation with the Office of Advocacy of the Small Business Administration and after opportunity for public comment, establishes one or more definitions of such term which are appropriate to the activities of the agency and publishes such definition(s) in the **Federal Register**.'' 5 U.S.C. 601(3).

[11] Small Business Act, 15 U.S.C. 632 (1996).

[12] 13 CFR 121.201, NAICS code 515120.

[13] Although we are using BIA's estimate for purposes of this revenue comparison, the Commission has estimated the number of licensed commercial television stations to be 1,374. *See* News Release, ''Broadcast Station Totals as of December 31, 2006'' (dated Jan. 26, 2007); *see http://www.fcc.gov/mb/audio/totals/bt061231.html.*

[14] 47 CFR 78.13.

Telecommunications Carriers; that category is defined as follows: ''This industry comprises establishments primarily engaged in operating and/or providing access to transmission facilities and infrastructure that they own and/or lease for the transmission of voice, data, text, sound, and video using wired telecommunications networks. Transmission facilities may be based on a single technology or a combination of technologies.'' [15] The SBA has developed a small business size standard for this category, which is: all such firms having 1,500 or fewer employees.[16] To gauge small business prevalence for these cable services we must, however, use current census data that are based on the previous category of Cable and Other Program Distribution and its associated size standard; that size standard was: all such firms having $13.5 million or less in annual receipts.[17] According to Census Bureau data for 2002, there were a total of 1,191 firms in this previous category that operated for the entire year.[18] Of this total, 1,087 firms had annual receipts of under $10 million, and 43 firms had receipts of $10 million or more but less than $25 million.[19] Thus, the majority of these firms can be considered small.

22. *Cable Companies and Systems.* The Commission has also developed its own small business size standards, for the purpose of cable rate regulation. Under the Commission's rules, a ''small cable company'' is one serving 400,000 or fewer subscribers, nationwide.[20] Industry data indicate that, of 1,076 cable operators nationwide, all but eleven are small under this size standard.[21] In addition, under the Commission's rules, a ''small system'' is a cable system serving 15,000 or fewer subscribers.[22] Industry data indicate that, of 7,208 systems nationwide, 6,139 systems have under 10,000 subscribers, and an additional 379 systems have 10,000–19,999 subscribers.[23] Thus, under this second size standard, most cable systems are small.

23. *Cable System Operators.* The Communications Act of 1934, as amended, also contains a size standard for small cable system operators, which is ''a cable operator that, directly or through an affiliate, serves in the aggregate fewer than 1 percent of all subscribers in the United States and is not affiliated with any entity or entities whose gross annual revenues in the aggregate exceed $250,000,000.'' [24] The Commission has determined that an operator serving fewer than 677,000 subscribers shall be deemed a small operator, if its annual revenues, when combined with the total annual revenues of all its affiliates, do not exceed $250 million in the aggregate.[25] Industry data indicate that, of 1,076 cable operators nationwide, all but ten are small under this size standard.[26] We note that the Commission neither requests nor collects information on whether cable system operators are affiliated with entities whose gross annual revenues exceed $250 million,[27] and therefore we are unable to estimate more accurately the number of cable system operators that would qualify as small under this size standard.

24. *Wireless Telecommunications Carriers (except satellite).* Wireless Telecommunications Carriers (except satellite), is a SBA standard which has a size standard of fewer than 1,500 employees.[28] Wireless cable systems use 2 GHz band frequencies of the Broadband Radio Service (''BRS''), formerly Multipoint Distribution Service (''MDS''), and the Educational Broadband Service (''EBS''), formerly Instructional Television Fixed Service (''ITFS''), to transmit video programming and provide broadband services to residential subscribers. These services were originally designed for the delivery of multichannel video programming, similar to that of traditional cable systems, but over the past several years licensees have focused their operations instead on providing two-way high-speed Internet access services. We estimate that the number of wireless cable subscribers is approximately 100,000, as of March 2005. As noted, within the category of Wireless Telecommunications Carriers (except satellite), such firms with fewer than 1,500 employees are considered to be small.[29] The data presented were acquired when the applicable SBA small business size standard was called Cable and Other Program Distribution, and which referred to all such firms having $13.5 million or less in annual receipts.[30] According to Census Bureau data for 2002, there were a total of 1,191 firms in this category that operated for the entire year.[31] Of this total, 1,087 firms had annual receipts of under $10 million, and 43 firms had receipts of $10 million or more but less than $25 million.[32] The SBA small business size standard for the broad census category of Wireless Telecommunications Carriers, which consists of such entities with fewer than 1,500 employees, appears applicable to MDS and ITFS.

25. The *Commission* has defined small MDS (now BRS) entities in the context of Commission license auctions. In the 1996 MDS auction, the Commission defined a small business as an entity that had annual average gross revenues of less than $40 million in the previous three calendar years. This definition of a small entity in the context of MDS auctions has been approved by the SBA. In the MDS auction, 67 bidders won 493 licenses. Of the 67 auction winners, 61 claimed status as a small business. At this time, the Commission estimates that of the 61 small business MDS auction winners, 48 remain small business licensees. In addition to the 48 small businesses that hold BTA authorizations, there are approximately 392 incumbent MDS licensees that have gross revenues that

[15] U.S. Census Bureau, 2007 NAICS Definitions, ''517110 Wired Telecommunications Carriers'' (partial definition); *http://www.census.gov/naics/2007/def/ND517110.HTM#N517110.*

[16] 13 CFR 121.201, NAICS code 517110.

[17] 13 CFR 121.201, NAICS code 517110.

[18] U.S. Census Bureau, 2002 Economic Census, Subject Series: Information, Table 4, Receipts Size of Firms for the United States: 2002, NAICS code 517510 (issued November 2005).

[19] *Id.* An additional 61 firms had annual receipts of $25 million or more.

[20] 47 CFR 76.901(e). The Commission determined that this size standard equates approximately to a size standard of $100 million or less in annual revenues. Implementation of Sections of the 1992 Cable Act: Rate Regulation, Sixth *Report and Order and Eleventh Order on Reconsideration,* 10 FCC Rcd 7393, 7408 (1995).

[21] These data are derived from: R.R. Bowker, *Broadcasting & Cable Yearbook 2006,* ''Top 25 Cable/Satellite Operators,'' pages A–8 & C–2 (data current as of June 30, 2005); Warren Communications News, *Television & Cable Factbook 2006,* ''Ownership of Cable Systems in the United States,'' pages D–1805 to D–1857.

[22] 47 CFR 76.901(c).

[23] Warren Communications News, *Television & Cable Factbook 2006,* ''U.S. Cable Systems by Subscriber Size,'' page F–2 (data current as of Oct. 2005). The data do not include 718 systems for which classifying data were not available.

[24] 47 U.S.C. 543(m)(2) *see* 47 CFR § 76.901(f) & nn. 1–3.

[25] 47 CFR 76.901(f); *see* Public Notice, *FCC Announces New Subscriber Count for the Definition of Small Cable Operator,* DA 01–158 (Cable Services Bureau, Jan. 24, 2001).

[26] These data are derived from: R.R. Bowker, *Broadcasting & Cable Yearbook 2006,* ''Top 25 Cable/Satellite Operators,'' pages A–8 & C–2 (data current as of June 30, 2005); Warren Communications News, *Television & Cable Factbook 2006,* ''Ownership of Cable Systems in the United States,'' pages D–1805 to D–1857.

[27] The Commission does receive such information on a case-by-case basis if a cable operator appeals a local franchise authority's finding that the operator does not qualify as a small cable operator pursuant to § 76.901(f) of the Commission's rules. *See* 47 CFR 76.909(b).

[28] 13 CFR 121.201, NAICS Code 517210. Standard for small business is 1,500 employees or fewer.

[29] 13 CFR 121.201, NAICS Code 517210.

[30] 13 CFR 121.201, NAICS Code 517110.

[31] U.S. Census Bureau, 2002 Economic Census, Subject Series: Information, Table 4, Receipts Size of Firms for the United States: 2002, NAICS code 517510 (issued November 2005).

[32] *Id.* An additional 61 firms had annual receipts of $25 million or more.

are not more than $40 million and are thus considered small entities. MDS licensees and wireless cable operators that did not receive their licenses as a result of the MDS auction fall under the SBA small business size standard for Wireless Telecommunications Carriers (except satellite).[33] As noted, within the category of Wireless Telecommunications Carriers, such firms with fewer than 1,500 employees are considered to be small.[34] The data presented were acquired when the applicable SBA small business size standard was called Cable and Other Program Distribution, and which referred to all such firms having $13.5 million or less in annual receipts.[35] According to Census Bureau data for 2002, there were a total of 1,191 firms in this category that operated for the entire year.[36] Of this total, 1,087 firms had annual receipts of under $10 million, and 43 firms had receipts of $10 million or more but less than $25 million.[37] Information available to us indicates that there are approximately 850 of these licensees and operators that do not generate revenue in excess of $13.5 million annually. Therefore, we estimate that there are approximately 850 small entity MDS (or BRS) providers, as defined by the SBA and the Commission's auction rules.

26. *Educational* institutions are included in this analysis as small entities; however, the Commission has not created a specific small business size standard for ITFS (now EBS). We estimate that there are currently 2,032 ITFS (or EBS) licensees, and all but 100 of the licenses are held by educational institutions. Thus, we estimate that at least 1,932 ITFS licensees are small entities.

27. *LTTS.* The Local Television Transmission Service (LTTS) in the 1990–2110 MHz band is used by communications common carriers to provide service to television broadcast stations, television broadcast networks, cable system operations, and cable network entities.[38] There are 45 LTTS licensees in the 1990–2110 MHz band, and these licensees will ultimately be required to use only the 2025–2110 MHz portion of that band. It is unclear how many of these will be affected by our new rules. The Commission has not yet defined a small business with respect to local television transmission services. For purposes of this IRFA, we will use the SBA's definition applicable to Wireless Telecommunications Carriers (except satellite). As noted, within the category of Wireless Telecommunications Carriers, (except satellite), such firms with fewer than 1,500 employees are considered to be small.[39] The data presented were acquired when the applicable SBA small business size standard was called Cellular and Other Wireless Telecommunications—which referred to all such firms having no more than 1,500 persons. According to Census Bureau data for 1997, there were 977 firms in this category, total, that operated for the entire year.[40] Of this total, 965 firms had employment of 999 or fewer employees, and an additional 12 firms had employment of 1,000 employees or more.[41] Thus, under this size standard, the majority of firms can be considered small.

28. *MSS.* There are two MSS operators in the 1990–2110 MHz band. These operators will provide services using the 2000–2020 MHz portion of the band. The SBA has developed a small business size for Satellite Telecommunications, which consist of all companies having annual revenues of less than $15 million.[42] Neither of the two MSS operators currently has revenues because one has not launched a satellite yet and the other is unable to provide service with its satellite because of the delays in the BAS transition. However, given that as of December 31, 2008, these MSS operators had assets of $1.341 billion and $664 million, respectively, we expect that both of these companies will have annual revenue of over $15 million once they are able to offer commercial services.[43] Consequently, we find that neither MSS operator is a small business. Small businesses often do not have the financial ability to become MSS system operators due to high implementation costs associated with launching and operating satellite systems and services.

29. *AWS.* The AWS licensees have not been issued and the Commission has no definite plans to issue these licensees. Presumably, some of the businesses which will eventually obtain AWS licensees will be small businesses. However, we have no means to estimate how many of these licensees will be small businesses.

30. *Sprint Nextel.* Sprint Nextel as a new entrant to the band will occupy spectrum from 1990–1995 MHz. The Report and Order and Order grants Sprint Nextel a waiver of the deadline by which it must relocate the BAS, CARS, and LTTS incumbents from the 1990–2025 MHz portion of the band. Sprint Nextel belongs to the SBA category Wireless Telecommunications Carriers (except satellite).[44] Businesses in this category are considered small if they have fewer than 1,500 employees.[45] As of December 31, 2008 Sprint Nextel had about 56,000 employees.[46] Consequently, we find that Sprint Nextel is not a small business.

D. Description of Projected Reporting, Recordkeeping, and Other Compliance Requirements for Small Entities

31. MSS entrants are required to coordinate their operations within line-of-sight of BAS receiver sites for those BAS licensees who have not yet been relocated. In addition, the MSS entrants may not operate ATC networks within line-of-sight of BAS receiver sites which have not yet been relocated. Because the locations of the BAS receiver sites are not in the Commission's databases, the BAS licensees are required to notify the MSS entrants of the location of the receiver sites upon request.

E. Steps Taken To Minimize the Significant Economic Impact on Small Entities, and Significant Alternatives Considered

32. The RFA requires an agency to describe any significant alternatives that it has considered in reaching its proposed approach, which may include the following four alternatives (among others): (1) The establishment of differing compliance or reporting requirements or timetables that take into account the resources available to small entities; (2) the clarification, consolidation, or simplification of compliance or reporting requirements

[33] 13 CFR 121.201, NAICS Code 517210.

[34] 13 CFR 121.201, NAICS Code 517210.

[35] 13 CFR 121.201, NAICS Code 517110.

[36] U.S. Census Bureau, 2002 Economic Census, Subject Series: Information, Table 4, Receipts Size of Firms for the United States: 2002, NAICS code 517510 (issued November 2005).

[37] *Id.* An additional 61 firms had annual receipts of $25 million or more.

[38] 47 CFR 101.803(b).

[39] 13 CFR 121.201, NAICS Code 517210.

[40] U.S. Census Bureau, 1997 Economic Census, Subject Series: Information, ''Employment Size of Firms Subject to Federal Income Tax: 1997,'' Table 5, NAICS code 517212 (issued Oct. 2000).

[41] *Id.* The census data do not provide a more precise estimate of the number of firms that have employment of 1,500 or fewer employees; the largest category provided is ''Firms with 1,000 employees or more.''

[42] 13 CFR 121.201, NAICS Code 517410.

[43] TerreStar Corp., SEC Form 10–K 2008 Annual Report, filed March 12, 2009 at F2; ICO Global Communications (Holdings) Limited, SEC Form 10–K 2008 Annual Report, filed March 31, 2009 at 52. ICO's subsidiary which controls its satellite covering the United States has recently filed for bankruptcy. ICO Global Communications (Holdings) Limited, SEC Form 8–K, filed May 15, 2009.

[44] 13 CFR 121.201, NAICS Code 517210.

[45] *Id.*

[46] Sprint Nextel Corp., SEC Form 10–K 2008 Annual Report, filed Feb. 27, 2009 at 14.

under the rule for small entities; (3) the use of performance, rather than design standards; and (4) an exemption from coverage of the rule, or any part thereof, for small entities.[47]

33. No parties have submitted comments indicating that there will be a disparate impact on small entities because of these rule changes. Because we have no evidence that small businesses will suffer disparate harm based on the rules we adopt today, based on the record now before us, we do not perceive a need for the Commission to take steps to minimize the adverse economic impact on small entities or consider alternatives to the rule amendments in the Report and Order and Order. In general, the BAS, CARS, and LTTS licensees may suffer harm in two ways from our amended rules: By suffering harmful interference to their transmissions from MSS entrants to the band or by having to expend resources to coordinate operations with the MSS entrants prior to completion of the BAS transition.[48]

34. The interest of BAS, CARS, and LTTS licensees would be affected by the proposed rule changes by either subjecting them to the threat of increased interference from MSS or by requiring MSS entrants to coordinate with the incumbents in order the operate in markets where the BAS incumbents have not yet been relocated to the new channel plan.[49] After the elimination of the top 30 market rule the nonrelocated BAS, CARS, and LTTS incumbents have primary status in the band until the band sunset date of December 9, 2013, while the new entrants will be secondary. As such, the new entrants will be required to avoid causing harmful interference to the nonrelocated BAS, CARS, and LTTS incumbents and will have to accept interference from the incumbents. Despite this requirement, there may be instances where the BAS, CARS, LTTS incumbents will experience harmful interference. Furthermore, the Commission expects the BAS, CARS, LTTS incumbents to act cooperatively to accommodate the MSS operators in nonrelocated markets to the greatest extent possible while not impairing their ability to make use of the spectrum.

35. The Commission notes that because the time period for exposure to potential interference is very short in duration, the potential of harmful interference actually occurring to BAS, CARS, and LTTS incumbents is small. All BAS, CARS, and LTTS incumbents are expected to be relocated by Sprint Nextel before the February 8, 2010 transition deadline. ICO has stated that they do not intend to offer commercial services during 2009.[50] TerreStar's operational milestone is not until August 30, 2009. The Commission expects that TerreStar will need a significant amount of time after its satellite is operational to begin providing commercial service. As a result, the amount of time that MSS will share spectrum with nonrelocated incumbents should be brief. As the transition progresses, fewer and fewer incumbents will remain unrelocated. Those BAS, CARS, and LTTS incumbents who have not been relocated are unlikely to receive harmful interference from MSS because of the coordination and non-interference requirements. Furthermore, any interference that does occur to incumbents will affect small entities in the same way that it affects large entities.

36. As for the coexistence of unrelocated BAS, CARS, and LTTS incumbents with MSS entrants until the incumbents are relocated, the unrelcoated BAS, CARS, and LTTS incumbents may have to expend some resources to coordinate operations with the MSS entrants. However, we do not expect that this coordination will be any more burdensome than the coordination that BAS licensees commonly do with other BAS incumbents. The requirement to coordinate with MSS entrants will affect all the BAS, CARS, and LTTS licensees equally, regardless of the size of these entities. We do not expect that BAS, CARS, and LTTS incumbents to suffer significant harm because they will not have to impair their use of the spectrum as a result of the coordination with the MSS entrants. Furthermore, if the MSS entrants can not successfully coordinate their use of the spectrum with the urnelocated incumbents, they will have to avoid use of the spectrum in markets where the incumbents have not been relocated.

37. Our primary concern in this proceeding continues to be balancing the needs of incumbent BAS licensees to provide service without suffering harmful interference and the introduction of new MSS in a timely manner. The Commission believes the slight hardship that may occur to BAS entities is justified by the benefit to the public of receiving MSS services earlier than they might have without the changes we are making to our rules.

38. However, because of our ongoing concern with avoiding arbitrary and unfair burdens on small entities, we considered a number of alternatives to the rules we are adopting. The Commission considered not eliminating the top 30 market rule. Because Sprint Nextel is not expected to relocate the last of the top 30 markets until the end of the BAS transition, this would have likely required MSS to wait until the BAS transition is complete before offering service to the public. In the meantime, a large amount of spectrum would have remained unused in the markets where the BAS incumbents have been relocated. The Commission believes it would not be in the public interest to allow this valuable spectrum to lie fallow. It also considered allowing BAS to operate only in those markets where the BAS incumbents had been relocated. The Commission concluded that allowing MSS operations in unrelocated markets with successful coordination was preferable to this approach because there will be instances in which coordination will permit sharing of the spectrum in markets where the BAS transition has not been completed.

F. Federal Rules That May Duplicate, Overlap or Conflict With the Proposed Rules

39. None.

Ordering Clauses

40. Pursuant to Sections 4(i), 5(c), 303(f), 332, 337 and 405 of the Communications Act of 1934, as amended, 47 U.S.C. 154(i), 155(c), 303(f), 332, 337 and 405, this Report and Order and Order *is adopted*. Parts 74 and 78 of the Commission's Rules are *amended* as specified in the Final Rules, effective July 23, 2009.

41. Pursuant to Sections 4(i), 5(c), 303(f), 332, 337 and 405 of the

[47] *See* 5 U.S.C. 603(c)(1–4).

[48] We do not believe that the BAS, CARS, and LTTS licensee will suffer a disparate impact from the two waivers we grant in the Report and Order and Order. The waiver of the deadline by which Sprint Nextel must relocate the BAS incumbents will benefit the BAS, CARS and LTTS licensees by making it more likely they will be relocated above 2025 MHz. If they are not relocated, the BAS, CARS, and LTTS will become secondary after the December 2013 sunset date. The waiver of the commercial availability ATC requirement for ICO will not affect the interest of BAS, CARS, and LTTS licensees because ICO is prohibited from operation ATC in markets where the incumbents have not been relocated and must avoid operating ATC networks within line-of-sight of BAS receiver sites that have not been relocated.

[49] We do not believe the interest of future AWS licensees will be negatively affected by the actions of the Report and Order and Order. However, because there are no definite plans to issue the AWS licenses, any consideration of the effects of the Report and Order and Order on the AWS licensees is necessarily speculative.

[50] ICO Global Communications (Holdings) Limited, SEC Form 10–K 2008 Annual Report, filed March 3, 2009 at 3; Grant of FCC Application for Space and Earth Station: Mod or AMD, File No. Sat–Mod–20080718–00143, granted Nov. 12, 2008.

Communications Act of 1934, as amended, 47 U.S.C. 154(i), 155(c), 303(f), 332, 337 and 405, this Further Notice of Proposed Rulemaking is *adopted*.

42. Pursuant to Sections 4(i) and (j) of the Communications Act of 1934, as amended, 47 CFR 154(i) and (j), and § 1.3 of the Commission's Rules, 47 CFR 1.3, that the waiver of the deadline by which Sprint Nextel must complete relocation of the broadcast auxiliary service to frequencies above 2025 MHz adopted in FCC 08–73, *is extended* until February 8, 2010.

43. The Supplemental Request is granted.

44. Pursuant to Sections 4(i) and (j) of the Communications Act of 1934, as amended, 47 CFR 154(i) and (j), and § 1.3 of the Commission's Rules, 47 CFR 1.3, that the waiver of the requirement under 47 CFR 25.149(b)(3) that New ICO Satellite Services G.P. (New DBSD Satellite Services G.P.) have commercially available satellite service in accordance with its coverage requirements as a prerequisite to offering ATC services is granted consistent with the terms of this order.

45. Pursuant to §§ 0.201, 0.203, 0.204, and 0.261 of the Commission's Rules, 47 CFR 0.201, 0.203, 0.204, 0.261, that authority to waive Section 25.149(b)(3) of the Commission rules, 47 CFR 25.149(b)(3) for TerreStar Networks Inc. is hereby *delegated* to the Commission's International Bureau.

46. Pursuant to Sections 4(i) and (j) of the Communications Act of 1934, as amended, 47 CFR 154(i) and (j), and Section 1.3 of the Commission's Rules, 47 CFR 1.3, that the Application for Review filed by Sprint Nextel of the grant of ATC authority to New ICO Satellite Services G.P. (New DBSD Satellite Services G.P.) *is dismissed*.

47. New ICO Satellite Services G.P.'s (New DBSD Satellite Services G.P.'s) request that we waive 47 CFR 74.690(e)(1)(i) of the Commission's rules *is dismissed*.

48. The Commission's Consumer and Governmental Affairs Bureau, Reference Information Center, *shall send* a copy of this *Report and Order and Order and Further Notice of Proposed Rulemaking,* including the Final Regulatory Flexibility Analysis and Initial Regulatory Flexibility Analysis, to the Chief Counsel for Advocacy of the Small Business Administration.

49. The Commission *shall send* a copy of this *Report and Order and Order and Further Notice of Proposed Rulemaking* in a report to be sent to Congress and the General Accounting Office pursuant to the Congressional Review Act, *see* 5 U.S.C. 801(a)(1)(A).

List of Subjects

47 CFR Part 74

Communications equipment, Reporting and recordkeeping requirements, and Television.

47 CFR Part 78

Cable television, Communications equipment, and Reporting and recordkeeping requirements.

Federal Communications Commission.

Marlene H. Dortch,

Secretary.

Final Rules

■ For the reasons discussed in the preamble, the Federal Communications Commission amends 47 CFR parts 74 and 78 to read as follows:

PART 74—EXPERIMENTAL RADIO, AUXILIARY, SPECIAL BROADCAST AND OTHER PROGRAM DISTRIBUTION SERVICES

■ 1. The authority citation for part 74 continues to read as follows:

Authority: 47 U.S.C. 154, 303, 307, 336(f), 336(h) and 554.

■ 2. Section 74.690 is amended by revising paragraph (e)(1)(i) to read as follows:

§ 74.690 Transition of the 1990–2025 MHz band from the Broadcast Auxiliary Service to emerging technologies.

* * * * *

(e) * * *

(1) * * *

(i) MSS licensees may relocate all Existing Licensees in Nielsen Designated Market Areas (DMAs) 1–30, as such DMAs existed on September 6, 2000, and all fixed stations operating in the 1990–2025 MHz band on a primary basis, except those Existing Licensees that decline relocation. Such relocation negotiations shall be conducted as ''mandatory negotiations,'' as that term is used in § 101.73 of this chapter. If these parties are unable to reach a negotiated agreement, MSS Licensees may involuntarily relocate such Existing Licensees and fixed stations after December 8, 2004.

* * * * *

PART 78—CABLE TELEVISION RELAY SERVICE

■ 3. The authority citation for part 78 continues to read as follows:

Authority: Secs. 2, 3, 4, 301, 303, 307, 308, 309, 48 Stat., as amended, 1064, 1065, 1066, 1081, 1082, 1083, 1084, 1085; 47 U.S.C. 152, 153, 154, 301, 303, 307, 308, 309.

■ 4. Section 78.40 is amended by revising paragraph (f)(1)(i) to read as follows:

§ 78.40 Transition of the 1990–2025 MHz band from the Cable Television Relay Service to emerging technologies.

* * * * *

(f) * * *

(1) * * *

(i) MSS licensees may relocate all Existing Licensees in Nielsen Designated Market Areas (DMAs) 1–30, as such DMAs existed on September 6, 2000, except those Existing Licensees that decline relocation. Such relocation negotiations shall be conducted as ''mandatory negotiations,'' as that term is used in § 101.73 of this chapter. If these parties are unable to reach a negotiated agreement, MSS Licensees may involuntarily relocate such Existing Licensees after December 8, 2004.

* * * * *

[FR Doc. E9–14760 Filed 6–22–09; 8:45 am]

BILLING CODE 6712–01–P

Proposed Rules

Federal Register

Vol. 74, No. 119

Tuesday, June 23, 2009

This section of the FEDERAL REGISTER contains notices to the public of the proposed issuance of rules and regulations. The purpose of these notices is to give interested persons an opportunity to participate in the rule making prior to the adoption of the final rules.

NUCLEAR REGULATORY COMMISSION

10 CFR Part 110

RIN 3150–AI16

[NRC–2008–0567]

Export and Import of Nuclear Equipment and Material; Updates and Clarifications

AGENCY: Nuclear Regulatory Commission.

ACTION: Proposed rule.

SUMMARY: The United States Nuclear Regulatory Commission (NRC) is proposing to amend its regulations that govern the export and import of nuclear equipment and material. In addition to updating, clarifying and correcting several provisions, this proposed rule would allow Category 1 and 2 quantities of materials listed in the Commission's regulations to be imported under a general license. The proposed rule would also revise the definition of ''radioactive waste'' and remove the definition of ''incidental radioactive material.''

DATES: The comment period for this proposed rule ends on September 8, 2009. Comments received after this date will be considered if it is practical to do so, but the NRC is only able to assure consideration for comments received on or before this date. Submit comments specific to the information collection aspects of this rule by July 23, 2009.

ADDRESSES: You may submit comments by any one of the following methods. Please include the number RIN 3150–AI16 in the subject line of your comments. Comments on rulemakings submitted in writing or in electronic form will be made available to the public in their entirety. Personal information, such as your name, address, telephone number, e-mail address, *etc.,* will not be removed from your submission.

Federal e-Rulemaking Portal: Go to *http://www.regulations.gov* and search for documents filed under Docket ID [NRC–2008–0567]. Address questions about NRC dockets to Carol Gallagher 301–415–5905; e-mail *Carol.Gallagher@nrc.gov*.

Mail comments to: Secretary, U.S. Nuclear Regulatory Commission, Washington, DC 20555–0001, *Attn:* Rulemakings and Adjudications Staff.

E-mail comments to: Rulemaking.Comments@nrc.gov. If you do not receive a reply e-mail confirming that we have received your comments, contact us directly at 301–415–1677.

Hand deliver comments to: 11555 Rockville Pike, Rockville, Maryland 20852, between 7:30 a.m. and 4:15 p.m., Federal workdays. (Telephone 301–415–1677)

Fax comments to: Secretary, U.S. Nuclear Regulatory Commission at 301–415–1101.

You may submit comments on the information collections by the methods indicated in the Paperwork Reduction Act Statement.

Publicly available documents related to this rulemaking may be viewed electronically on the public computers located at the NRC's Public Document Room (PDR), O–1 F21, One White Flint North, 11555 Rockville Pike, Rockville, Maryland. The PDR reproduction contractor will copy documents for a fee.

Publicly available documents created or received at the NRC after November 1, 1999, are available electronically at the NRC's Electronic Reading Room at *http://www.nrc.gov/reading-rm/adams.html*. From this site, the public can gain entry into ADAMS, which provides text and image files of NRC's public documents. If you do not have access to ADAMS or if there are problems in accessing the documents located in ADAMS, contact the PDR Reference staff at 1–800–397–4209, 301–415–4737 or by e-mail to *PDR.Resource@nrc.gov.*

FOR FURTHER INFORMATION CONTACT: Brooke G. Smith, International Policy Analyst, Office of International Programs, U.S. Nuclear Regulatory Commission, MS–04E21, Washington, DC 20555–0001; telephone: 301–415–2347; e-mail: *brooke.smith@nrc.gov*.

SUPPLEMENTARY INFORMATION:

I. Background and Discussion

The NRC is proposing to amend its regulations for the export and import of nuclear equipment and material in 10 CFR Part 110, Export and Import of Nuclear Equipment and Material. The proposed rule would update, clarify, and correct several provisions in 10 CFR Part 110 to improve NRC's regulatory framework for the export and import of nuclear equipment, material, and radioactive waste. It would also clarify and correct the regulations addressing the general license for the export of byproduct material. In addition, changes are proposed to the regulations governing the export and import of Category 1 and Category 2 quantities of radioactive materials listed in Appendix P to 10 CFR Part 110 and the definition of ''radioactive waste'' in 10 CFR Part 110. A discussion of the most significant changes follows.

A. Category 1 and 2 Quantities of Radioactive Material Listed in Appendix P to Part 110

On July 1, 2005, the NRC published a final rule that amended 10 CFR Part 110 to take into account provisions of the International Atomic Energy Agency (IAEA) Code of Conduct on the Safety and Security of Radioactive Sources (Code of Conduct), and the supplemental IAEA Guidance on the Import and Export of Radioactive Sources. The amendments provided for enhanced security for the export and import of Category 1 and Category 2 quantities of radioactive materials listed in a new Appendix P to 10 CFR Part 110 including new specific export and import licensing requirements, advance notification procedures prior to shipment, verification of the recipient facility's licensing status, and review of the adequacy of the receiving country's controls on radioactive sources.

These requirements became effective on December 28, 2005. Since these new requirements have been implemented, the NRC has reevaluated the need for a specific license for the import of Category 1 and 2 quantities of radioactive material to a U.S.-licensed user in light of enhancements made to the NRC's domestic regulatory framework. As a result, the NRC is proposing to amend 10 CFR Part 110 to allow imports of Category 1 and 2 quantities of materials listed in Appendix P under a general license. The proposed change would also align the NRC's regulations with the practices of other countries and is responsive to

the comments the NRC has received from U.S. licensees.

The most significant enhancement pertinent to these materials is the establishment of the National Source Tracking System (NSTS) that will track from ''cradle to grave'' transactions involving Category 1 and 2 radioactive sources (71 FR 65686; November 8, 2006). Licensees will be responsible for recording the manufacture, shipment, arrival, and disposal of all licensed and tracked Category 1 and 2 sources. For every nationally tracked source that is imported, the facility obtaining the source will be required to report the information to the NSTS by the close of the next business day after receipt of the imported source. The effective date for this proposed change to allow imports of Category 1 and 2 material under a general license would be delayed until the NSTS is fully operational; however, it is expected that the NSTS would be fully operational well before this proposed change is promulgated as a final rule. The current estimate for the launch of the NSTS (tracking of Category 1 and 2 sources) is January 31, 2009. With the NSTS in place, there will be much more information about imported sources available to the staff, reducing the need for a specific license.

Specifically, § 110.27(f) would be revised by removing the specific license requirement for imports of radioactive material listed in Table 1 of Appendix P to 10 CFR Part 110. Conforming changes are proposed to §§ 110.32, 110.43, and 110.50. Imports of radioactive material into the United States would continue to be contingent on the consignee being authorized to receive and possess the material under a general or specific NRC or Agreement State license. *See* § 110.27(a). Moreover, importers of Category 1 and 2 materials under a general license would still be subject to the notification requirements prior to shipment as required by § 110.50. The advance notifications of imports of Category 1 and 2 quantities of material, § 110.50(c) would be revised to require the exporting facility name, location, address, contact name and telephone number as part of the pre-shipment notification.

Additionally, § 110.50(c) would be revised to require advance notifications of imports to be submitted seven days in advance of shipment. This change would permit NRC staff adequate time to verify the information provided in the advance notification. Currently, the pre-shipment notification is at least seven days in advance of each shipment, to the extent practical, but in no case less than 24 hours in advance of each shipment.

Currently, at the time of the license application, for both Category 1 and Category 2 exports, the applicant for the export license is required to provide the NRC with pertinent documentation demonstrating that the recipient of the radioactive material has the necessary authorization under the laws and regulations of the importing country to receive and possess the material. For Category 2 exports, the NRC has waived this requirement for a number of licensees to allow the exporter to provide this authorization at the time of notification of shipment instead of at the time of the application. This waiver is consistent with the Code of Conduct and supplemental Guidance, under which the authorization from the importing country can be verified by the exporter of Category 2 material if permitted by the licensing agency.

The proposed rule would amend § 110.32 to allow the export licensee (for Category 2 material only) to verify the authorization from the importing country at the time of shipping instead of at the time of the license application. The regulations would continue to require licensees to send copies of the authorizations to the NRC.

B. Import and Export of Radioactive Waste

In 1995, the NRC promulgated a final rule requiring specific licenses for exports and imports of radioactive waste (60 FR 37555; July 21, 1995). Since that time, based on the Commission's extensive experience in implementing the rule, it became clear that the rule warrants revision. Specifically, the definition of radioactive waste in 10 CFR Part 110 is confusing and inconsistent with how the term is used domestically. Likewise, the term ''incidental radioactive material'' (IRM), as defined in 10 CFR Part 110, is unclear with regard to its scope, applicability, and relationship to radioactive waste. In particular, the meaning of the phrase ''recycling or resource recovery'' in the definition of IRM is unclear and difficult to apply because the concept of IRM is limited to 10 CFR Part 110. Consequently, the Commission is proposing changes to the definition of radioactive waste in § 110.2 to address these concerns. Among the proposed changes is the deletion of the definition of IRM from § 110.2 and incorporation of aspects of it in the revised definition of radioactive waste. These proposed changes to 10 CFR Part 110 will facilitate the licensing process for exports and imports of radioactive waste and improve the efficiency and consistency of licensing actions.

A specific license would be required for the export and import of radioactive waste if a specific radioactive material license is required to possess the material domestically in accordance with NRC's regulations in 10 CFR Chapter 1 (*e.g.,* Parts 30, 40, and 70). This revision would link the specific license requirement for the export and import of radioactive waste to those materials (in the form of waste) that require a specific license in accordance with NRC's domestic regulations. This would eliminate the need for a specific license to export or import materials that do not require a specific license to possess under NRC's regulations in 10 CFR Chapter 1. In addition, this proposed change would improve consistency and eliminate some of the differences between the domestic licensing requirements for possession and the licensing requirements for export and import.

The proposed changes would require a specific export or import license for any material that requires a specific NRC license to possess domestically, in accordance with the requirements in 10 CFR Chapter 1, that is exported or imported for the purposes of (1) disposal in a land disposal facility as defined in Part 61, a disposal area as defined in Appendix A to Part 40, or an equivalent facility; or (2) recycling, waste treatment or other waste management process that generates radioactive material for disposal in a land disposal facility as defined in Part 61, a disposal area as defined in Appendix A to Part 40, or an equivalent facility. This change would simplify the regulatory framework by clearly stating that exporting or importing material for recycling, waste treatment, or other waste management process that generates radioactive material for disposal in a Part 40 or Part 61 facility (or the equivalent) would require a specific export or import license.

This proposed rule would also delete the definition of ''incidental radioactive material'' from 10 CFR Part 110. The purpose of this proposed change would be to clarify the scope of ''radioactive waste'' and to address confusion created by the current definition of IRM. While the proposed rule would delete the definition of IRM, the rule does incorporate aspects of IRM into the revised definition of radioactive waste and the exclusions from that definition. For example, the current scope of the exclusion related to contamination on service equipment (including service tools) used in nuclear facilities (if the service equipment is being shipped for use in another nuclear facility and not for waste management purposes or

disposal) would be expanded and broadened to include some of the material that currently falls under the definition of IRM such as launderable protective clothing.

There are three exclusions from the current definition of ''radioactive waste.'' Under the proposed rule, the three exclusions would be retained, with some modifications, and two new exclusions are proposed. The five proposed exclusions are set forth below:

1. Radioactive material in sealed sources or devices containing sealed sources being returned to any manufacturer, distributor or other entity which is authorized to receive and possess them. Under the current exclusion, the scope is limited to sources or devices being returned to a manufacturer. The proposed change would allow the return of sources or devices to distributors and other appropriately authorized entities. Licensing and notification requirements for Category 1 and Category 2 quantities of material listed in Table 1 of Appendix P would apply where applicable.

2. A contaminate on any non-radioactive material used in nuclear facilities, if the item is being shipped for recovery and beneficial use of the non-radioactive component in a nuclear facility and not solely for waste management purposes or disposal. The current scope of the exclusion related to contamination on service equipment (including service tools) used in nuclear facilities (if the service equipment is being shipped for use in another nuclear facility and not for waste management purposes or disposal) would be expanded and broadened to include some of the material that currently falls under the definition of IRM such as launderable protective clothing.

3. Materials exempted from regulation by the Nuclear Regulatory Commission or equivalent Agreement State regulations. This proposed exclusion is consistent with the previously mentioned revision that links the requirement for a specific import or export license for radioactive waste to the specific licensing requirements in 10 CFR Chapter 1 (*e.g.,* Parts 30, 40, and 70). This change would eliminate some differences between NRC's export and import regulations and domestic regulation of the same material or equipment.

4. Materials generated or used in a U.S. Government waste research and development testing program under international arrangements. No changes are proposed to this exclusion.

5. Materials being returned by or for the U.S. Government or military to a facility that is authorized to possess the material. This proposed exclusion recognizes that the U.S. Government or military will, in certain circumstances, seek to return material to the United States. Material returned must be to a facility that is authorized to possess the material.

C. General License for the Export of Byproduct Material

The NRC staff regularly receives questions from the regulated community regarding the application of § 110.23, General license for the export of byproduct material. Our experience has demonstrated the need to revise several requirements for the export of byproduct material in order to clarify the requirements and to address inconsistencies inadvertently resulting from prior changes made to the section in 1994 (September 26, 1994; 59 FR 48994) and 2000 (November 22, 2000; 65 FR 70287).

Prior to 1994, a general license was issued to any person to export any byproduct material, except for tritium, polonium-210, neptunium-237, and americium-241, to any country not listed in § 110.28 (embargoed destinations). In 1994, the NRC revoked the general license for Nuclear Supplier Group (NSG)-controlled alpha-emitters and International Atomic Energy List of the Coordinating Committee on Multilateral Export Controls (COCOM)-controlled transuranic isotopes. The NRC established a new general license to permit the export of the specified alpha-emitting radionuclides to countries which are members of the NSG and to permit the export of the specified alpha-emitting radionuclides to most other countries when in a device, or in a source for use in a device, containing less than 3.7×10^{-3} terabecquerels (TBq) (100 millicuries (mCi)) of alpha activity per device or source. (10 CFR Part 71, Appendix A, provides specific activities in terabequerels per gram and in curies per gram.) The alpha-emitting radionuclides added to § 110.23 (a)(2) in 1994 were:

Actinium-225.
Actinium-227.
Californium-248.
Californium-250.
Californium-252.
Curium-240.
Curium-241.
Curium-242.
Curium-243.
Curium-244.
Einsteinium-252.
Einsteinium-253.
Einsteinium-254.
Einsteinium-255.
Fermium-257.
Gadolinium-148.
Mendelevium-258.
Polonium-208.
Polonium-209.
Polonium-210.
Radium-223.

The NRC also revoked the general license for americium-242m, californium-249, californium-251, curium-245, and curium-247 (transuranic isotopes) to conform NRC's regulations with the COCOM control list.

At the final rule stage, curium-246 was added to § 110.23(a)(1) (1994) which had the effect of restricting the general license for curium-246 to a specified activity level. It appears that this restriction was in error. Curium-246 is not on the NSG-control list or the COCOM-control list. Further, there is no discussion in the final rule (or the proposed rule) in 1994 of restricting the general license for curium-246 at a specified activity level. Therefore, this proposed rule would remove the limitation on the general license for export. Curium-246, at any activity level, could be exported under a general license to any country not listed in § 110.28 (embargoed destination).

As a result of the 2000 amendments, the NSG-controlled and COCOM-controlled radionuclides were merged into § 110.23(a)(2) (2000). Americium-241 and neptunium-237 were included in this section even though they were not NSG- or COCOM-controlled. All of the radioisotopes listed in that section could be exported under a general license up to 3.7×10^{-3} TBq (100 millicuries).

In the proposed rule, new § 110.23(a)(2) would contain the requirements for COCOM-controlled radionuclides and new § 110.23(a)(4) would contain the general license for the NSG-controlled alpha-emitting radionuclides.

The general license for americium-241 would also be revised. In 2000, when § 110.23 was clarified for ease of reading, americium-241 (and neptunium-237) were included in the ''merged'' list of NSG- and COCOM-controlled radionuclides even though they were not NSG- or COCOM-controlled (*see* § 110.23(a)(2) (2000)). The effect of the 2000 amendments was to restrict the general license for exports of americium-241 to 3.7×10^{-3} TBq (100 mCi). Prior to the changes in 2000, there were no activity restrictions on exports to countries not listed in §§ 110.29 (restricted destinations) and 110.28 (embargoed destinations). Americium-241 exports under a general license could not exceed 3.7×10^{-2} TBq

(one curie) per shipment or 3.7 TBq (100 curies) per year to any one country listed in § 110.29. For exports to § 110.29 countries that exceeded the limit above, the americium-241 must be contained in petroleum exploration or industrial process control equipment in quantities not exceeding 0.74 TBq (20 curies) per device or 7.4 TBq (200 curies) per year to any one restricted country.

In 2005, the Commission published a final rule that conformed NRC's export and import regulations to the provisions of the IAEA Code of Conduct and supplemental Guidance (July 5, 2005; 70 FR 37985). The specific radioactive material and quantities added by this rule are listed in Table 1 of Appendix P to 10 CFR Part 110. Americium-241 is one of the materials listed in this table. As a result of the 2005 rule, an NRC specific license was required to export (and import) these radioactive materials at Category 2 and above quantities. For americium-241, the Category 2 threshold limit was set at 0.6 TBq (16 Ci). As part of the 2005 rulemaking, changes were made to the general license for americium-241 in an effort to conform it to the threshold for americium-241 in Table 1 of Appendix P. The staff is now proposing to remove americium-241 from § 110.23 (a)(2) which currently controls it at 3.7×10^{-3} TBq (100 mCi) and rewrite the general license for americium-241 in proposed § 110.23(a)(5) to address the inconsistencies inadvertently resulting from prior changes to the section and to take into account the Appendix P thresholds for americium-241.

Likewise, the general license for the export of neptunium-237 would be revised to address inconsistencies resulting from prior rule changes. Under this proposed rule the general license for the export of neptunium-237 would cover shipments that do not exceed one gram for individual shipment and do not exceed a cumulative total of 10 grams per year to any one country. The general license would be found in § 110.23(a)(6) of this proposed rule.

We also reexamined the general license to export tritium. Several editorial changes are proposed for the general license in an effort to make it more readable. Over the years, the various restrictions applying to the general license to export tritium had been merged into a single subparagraph—currently, § 110.23 (a)(6). In this proposed rule, the general license for tritium has been divided into four sections, § 110.23(a)(8)(i) through (a)(8)(iv), for clarity.

II. Section-by-Section Analysis

Subpart A—General Provisions

Section 110.1, Purpose and scope. The proposed rule would remove paragraph (b)(2). None of the items controlled by the Department of State pursuant to 22 CFR Parts 120 through 130, ''International Traffic in Arms Regulations'' (ITAR), are within the scope of the NRC's regulations. Also, the citations in paragraphs (b)(3) and (b)(4) would be corrected.

Section 110.2, Definitions. The proposed rule would revise the definitions for *Agreement for cooperation, Atomic Energy Act, Classified Information, Conversion facility, Depleted uranium, Effective kilograms of special nuclear material, Embargoed, Executive Branch, General license, Heels, Medical isotope, Natural uranium, Non-Nuclear Weapons State, NRC Public Document Room, Obligations, Physical security, Radioactive waste, Radiopharmaceutical, Recipient Country, Restricted destinations,* and *Specific license* to make editorial changes. The proposed revision to the definition of radioactive waste is discussed in detail in Section 1.B of this document. The definitions for *Bulk material, Low-level waste compact,* and *Nuclear Suppliers Group* would be added for clarification purposes. In addition, the proposed rule would remove the definition of *Incidental radioactive material* as discussed in Section 1.B of this document.

Section 110.4, Communications. Changes would be made to update a reference to an NRC Web site URL.

Section 110.6, Retransfers. The proposed rule would add language to clarify the scope of the provisions to be consistent with the requirements of the Atomic Energy Act. Paragraph (b) would be amended to update the address for the Department of Energy.

Section 110.7, Information collection requirements: OMB approval. Changes would restructure the section for clarification and would make a minor editorial change.

Section 110.7a, Completeness and accuracy information. The proposed rule would make an editorial change to paragraph (b).

Subpart B—Exemptions

Section 110.10, General. The proposed rule would amend paragraph (c) to clarify that an exemption does not relieve any person from complying with the regulations of other U.S. Federal and/or State Government agencies.

Section 110.11, Export of IAEA safeguards samples. Editorial changes are proposed to the text.

Subpart C—Licenses

Section 110.19, Types of licenses. The proposed rule would amend paragraph (a) by removing the last sentence regarding compliance with other applicable regulations. The requirement that general and specific licensees are subject to other applicable laws or regulations is already addressed in § 110.50(a). This proposed rule would also remove paragraph (b) which relates to exports of incidental radioactive material.

Section 110.20, General license information. The proposed rule would remove references to ''incidental radioactive material'' and correct citations in paragraph (a). Paragraph (d) would be amended to preclude use of generally licensed material in any illegal or inappropriate activity such as use in a radiological dispersion device, diversion of material or equipment, and other malicious acts.

Section 110.21, General license for the export of special nuclear material. The proposed rule would remove the general license provision related to the export of incidental radioactive material in paragraph (e) and make editorial changes to paragraphs (a), (b), and (c).

Section 110.22, General license for the export of source material. The proposed rule would make editorial changes, correct internal reference errors in paragraphs (a), (b), (c), (d), (e), and (f), and would add a reference to paragraph (e) to the text of paragraph (f). The amendment would remove the general license provision related to the export of incidental radioactive material in paragraph (g).

Section 110.23, General license for the export of byproduct material. The proposed rule would make editorial and organizational changes to clarify requirements. No new substantive requirements are proposed. These changes are discussed in detail in Section I.C of this document.

Section 110.24, General license for the export of deuterium. Proposed editorial changes would clarify the text to improve readability.

The proposed rule would amend 10 CFR Part 110, by adding and reserving § 110.25. This change is made to clarify that there is not a printing error in 10 CFR Part 110 and reserve this section for possible future changes to the regulations.

Section 110.26, General license for the export of nuclear reactor components. The proposed rule would amend § 110.26 by restructuring paragraph (a)

to clarify that the general license covers components solely of U.S. origin. Paragraph (a)(1) would be removed, and the text incorporated into paragraph (a). Paragraphs (a)(2) and (a)(3) would be redesignated as (a)(1) and (a)(2), respectively. New paragraph (a)(2) would be amended to allow a component to be returned to the United States after final fabrication or repair or to be used in a nuclear power or research reactor in one of the destinations listed in the section. This would allow, for example, a component that was sent to Japan for final fabrication or repair to be sent to Spain for use in a nuclear power or research reactor in that country. The list of destinations in paragraph (a) would be moved to new paragraph (b). The subsequent paragraphs would be renumbered accordingly.

New paragraph (b) would be revised to include additional destinations to which exports may be sent under a general license. These destinations are Cyprus, Estonia, Hungary, Malta, Poland, Slovak Republic, and Slovenia. The United States has received broad generic assurances from EURATOM which would also apply to these new EURATOM member countries for purposes of section 109b. of the Atomic Energy Act.

Section 110.27, General license for imports. The proposed rule would amend § 110.27 by removing paragraphs (a)(1) and (a)(2). NRC's import regulations do not apply to the Department of Energy for activities authorized by sections 54, 64, 82, and 91 of the Atomic Energy Act. This includes activities conducted under a contract with the Department of Energy. We are proposing to remove paragraph (a)(2) because a general license should not be required for the import of byproduct, source, or special nuclear material when that same material is exempt from NRC domestic licensing requirements. The current inconsistency between NRC's import licensing requirements and NRC's domestic licensing requirements is a source of confusion. This change would clarify that material that is exempt or else not subject to domestic licensing requirements (*e.g.,* § 31.18 and § 40.13) would not require a general or specific import license unless otherwise mandated in 10 CFR Part 110.

Paragraph (b) would be revised to clarify that the 100 kilograms per shipment limit only applies to the material and does not include the weight of the container. As revised, this paragraph would state that the general license in paragraph (a) does not authorize the import of source or special nuclear material in the form of irradiated fuel if the total weight of the material exceeds 100 kilograms per shipment.

Section 110.27 would be revised at paragraph (f) by removing the specific license requirement for imports of radioactive material listed in Table 1 of Appendix P to 10 CFR Part 110. As discussed in detail in Section I.A of this document, this proposed rule would allow Category 1 and Category 2 quantities of radioactive materials to be imported under a general license.

Section 110.30, Members of the Nuclear Suppliers Group. The proposed rule would update the list of Nuclear Suppliers Group members by adding ''China,'' ''Croatia,'' ''Estonia,'' ''Kazakhstan,'' ''Lithuania,'' and ''Malta.''

Section 110.31, Application for a specific license. The proposed rule would amend this section to require requests for an exemption from a licensing requirement to be filed on NRC Form 7. This is consistent with NRC regulations that require all licensing requests (*i.e.,* exports, imports, combined export/import, amendment, and renewal applications) to be made using NRC Form 7. *See* 71 FR 19102; April 13, 2006.

Section 110.31 would be changed to require a request for an exemption from a licensing requirement to be accompanied by the appropriate fee in accordance with the fee schedule in § 170.21 and § 170.31. This change is consistent with the Fiscal Year 2007 NRC Fee Rule which established a flat fee for requests for exemptions from NRC's export and import licensing requirements. *See* 72 FR 31402; June 6, 2007. This change would update 10 CFR Part 110 to reflect recent changes to the fee schedule in 10 CFR Part 170.

Additionally, the proposed rule would add a signature requirement to § 110.31 that each application submitted on NRC Form 7 must be signed by the applicant or licensee or a person duly authorized to act for and on behalf of the applicant or licensee. This proposed change is consistent with requirements related to applications for specific licenses in other parts of NRC's regulations. It would also clarify that a signature is required to certify the veracity of information submitted to the agency on the NRC Form 7.

Finally, the order of paragraphs (b) and (c) would be reversed so that § 110.31 flows in a more logical manner where the requirement for an application for a specific license to export or import or a request for an exemption from a licensing requirement precedes the requirement that such an application or request be accompanied by the appropriate license fee. In paragraph (b), as revised, ''combined export/import'' would be removed to be consistent with the proposal to allow imports of Category 1 and 2 materials listed in Table 1 of Appendix P of 10 CFR Part 110 under general license.

Section 110.32, Information required on an application for a specific license/ NRC Form 7. The proposed rule change to paragraph (b) would clarify that the name and address of any other party, including the supplier of the equipment or material, if different from the applicant, must be provided on the application. Paragraphs (f)(1) and (f)(2) would be amended for consistency purposes. Specifically, for the export of nuclear equipment to a foreign reactor, a license application would include the name of the facility so the NRC would know whether Executive Branch review is required, per § 110.41(a)(7).

This section would also be amended to clarify that applicants for the import of radioactive waste must provide the classification of that waste as defined in 10 CFR 61.55 when the waste is being imported for direct disposal. If the waste is being imported for treatment or management at an NRC or Agreement State licensed waste processor, classification, as defined in 10 CFR 61.55, is not required. Rather, a detailed characterization (physical and chemical characteristics) of the waste being imported for treatment or management must be provided in the application.

Paragraph (g) would be deleted to conform this section with the proposed change which would allow Category 1 and Category 2 quantities of radioactive materials to be imported under a general license. This proposed change is discussed in more detail in Section I.A of this document and in the section-by-section analysis for § 110.27.

Paragraph (h) would be redesignated as new paragraph (g) and would allow the exporter of Category 2 quantities of material listed in Table 1 of Appendix P to provide the pertinent documentation that the recipient of the material has the necessary authorization under the laws and regulations of the importing country to receive and possess the material to the NRC at least 24 hours prior to the shipment. These changes are discussed in Section I.A of this document. The requirement that the applicant for a Category 1 export license provide the NRC, at the time the application is submitted, with pertinent documentation demonstrating that the recipient of the radioactive material has the necessary authorization (usually in the form of a license) under the laws and regulations of the importing country

to receive and possess the material would remain unchanged.

Subpart D—Review of License Applications

Section 110.40, Commission review. The proposed rule would amend this section to reduce the number of export license applications that require Commission review and would, instead, focus Commission review on the export license applications that raise significant policy issues. For example, mandatory Commission review of export applications for nuclear grade graphite for nuclear end use and 1,000 kilograms or more of deuterium oxide would no longer be required unless the export raises an important policy issue. The proposed change also would increase the proposed export of one effective kilogram of high-enriched uranium, plutonium or uranium-233 to five effective kilograms for mandatory Commission review. The change would mandate Commission review of import license applications that raise significant policy issues. By focusing on policy issues, this proposed change would increase efficiency and reduce fees on routine NRC export applications. Any export that is subject to special limitations as determined by the staff or the Executive Branch would be considered one that raises an important policy issue and would continue to require Commission review. This proposed rule would add a requirement for Commission review of export applications of material listed in Table 1 of Appendix P to 10 CFR Part 110 involving exceptional circumstances, as defined in § 110.42, or Category 1 quantities of material to any country listed in § 110.28.

Section 110.41, Executive Branch review. The proposed rule would amend § 110.41 to make a minor editorial change and to require Executive Branch review of exports raising significant policy issues, including exports of radioactive material listed in Table 1 of Appendix P to 10 CFR Part 110 involving exceptional circumstances as defined in § 110.42. Also, the export of radioactive material listed Table 1 of Appendix P to any country listed in §§ 110.28 or 110.29 would require the review of the Executive Branch in accordance with § 110.41(a)(9).

Section 110.43, Import licensing criteria. The proposed rule would amend § 110.43 to clarify that, with respect to the import of radioactive waste, the NRC consults with the host State(s), and, if applicable, the appropriate low-level waste compact commission(s) to confirm that an appropriate facility has agreed to accept and is authorized to possess the waste for management or disposal. Commission policy, as noted in the 1995 final rule on the export and import of radioactive waste, states that:

> The NRC will not grant an import license for waste intended for disposal unless it is clear that the waste will be accepted by a disposal facility, host State, and compact (where applicable). This will be part of the determination regarding the appropriateness of the facility that has agreed to accept the waste for management or disposal.

See Final Rule, Import and Export of Radioactive Waste, 60 FR 27556 (July 21, 1995). This proposed change would address the questions that the NRC receives on the scope of the host State and low-level waste compact commission's (if applicable) role regarding the NRC's review of import applications for radioactive waste.

Additionally, the proposed rule would amend § 110.43 to remove the import licensing criteria related to the imports of radioactive material listed in Appendix P. This change conforms § 110.43 with the proposed change to allow Category 1 and Category 2 quantities of radioactive materials to be imported under a general license. This change is discussed in more detail in Section I.A to this document and in the section-by-section analysis for § 110.27.

Section 110.44, Physical security standards. The proposed rule would correct the Web site reference for the National Archives and Records Administration. Changes are proposed to § 110.44(b)(1) that would clarify that the Commission determinations on the adequacy of physical security measures are based on receipt by the appropriate U.S. Executive Branch agency of written assurances from the relevant recipient country governments that physical security measures for providing protection at least comparable to the recommendations set forth in INFCIRC/225/Rev. 4 (corrected).

Section 110.45, Issuance or denial of license. The proposed rule would amend this section to remove the parenthetical text in paragraph (a) that states ''If an Executive Order provides an exemption pursuant to section 126a of the Atomic Energy Act, proposed exports to EURATOM countries are not required to meet the criteria in § 110.42(a)(4) and (5)''. This is no longer needed because the Agreement for Cooperation in the Peaceful Uses of Nuclear Energy Between the European Energy Community (EURATOM) and the United States of America that went into effect in 1995 obviates the need for a presidential exemption.

The proposed rule would make conforming changes to paragraph (b)(4), which would be consistent with the proposed changes to § 110.43(d), regarding the issuance of an import license of radioactive waste. Paragraph (b)(5) would be removed to eliminate the criteria related to the imports of radioactive material listed in Appendix P to 10 CFR Part 110. This change would conform § 110.45 with the proposed change to allow Category 1 and Category 2 quantities of radioactive materials to be imported under a general license. This change is discussed in more detail in Section I.A to this document and in the section-by-section analysis for § 110.27. Additionally, § 110.45(d) would be amended to clarify that the provisions in this paragraph do not apply to Commission decisions regarding license applications for specific licenses to export radioactive material listed in Table 1 of Appendix P to 10 CFR Part 110.

Subpart E—License Terms and Related Provisions

Section 110.50, Terms. The proposed rule would make several editorial, clarifying, and conforming changes to this section. In paragraph (a)(1), proposed changes would clarify that each license is subject to all applicable provisions of the Atomic Energy Act or other applicable law. Paragraph (a)(4) would be rewritten and renumbered (a)(5) to make clear that each license issued by the NRC for the export or import of nuclear material authorizes only the export or import of that nuclear material and accompanying packaging, fuel element, hardware, or other associated devices or products. Paragraph (b)(5) would be revised to remove reference to 10 CFR Parts 40, 70, 71, and 73 and renumbered as paragraph (a)(3). This license term applies to both general and specific licenses and should be found in paragraph (a).

In paragraph (b)(2), proposed changes would clarify that a licensee may export or import only for the purpose(s) and/or end-use(s) stated in the specific export or import license issued by the NRC. Paragraph (b)(3) would be amended by adding a new paragraph (b)(3)(i) and renumbering current paragraphs (b)(3)(i) and (b)(3)(ii) as (b)(3)(ii) and (b)(3)(iii), respectively. New paragraph (b)(3)(i) would clarify that prior to shipment of certain nuclear material or equipment that has associated with it export controls imposed by other countries (foreign-obligated material or equipment), a license amendment may be required to authorize the shipment. Alternatively, the licensee could give the NRC 40 days

advance notice of the intended shipment.

Paragraph (b)(4) would be redesignated as new paragraph (c) and would include the requirements for advanced notifications related to the export or import of radioactive material listed in Table 1 of Appendix P to 10 CFR Part 110. Proposed changes to the advance notification requirements would conform this section with the proposed change to allow Category 1 and Category 2 quantities of radioactive materials to be imported under a general license. This change is discussed in more detail in Section I.A of this document and in the section-by-section analysis for § 110.27. Additionally, editorial changes are proposed to update the Web site information for the Office of International Programs and to provide specific details on where to send the information required for export and import notifications.

Section 110.51, Amendment and renewal of licenses. The proposed rule would amend § 110.51 to separate the requirements for license amendments and renewals into separate paragraphs. This proposed change would clarify the differences in requirements between amendment and renewal requests and improve readability of the section. No substantive changes are proposed.

Section 110.53, United States address, records, and inspections. The proposed rule would clarify that both general and specific licensees are required to have an office in the United States where papers may be served and where records required by the Commission will be maintained. Also, it is proposed to add similar clarifying language to paragraph (b) of this section that license applicants and both general and specific licenses shall maintain records concerning its exports and imports. Clarifying language would also be added that byproduct material records must be retained for three years after the date of each export or import shipment.

Subpart F—Violations and Enforcement

Sections 110.60, Violations, 110.66, Enforcement hearing, and 110.67, Criminal penalties. Proposed changes would make non-substantive changes for purposes of consistency and clarification.

Subpart G—Public Notification and Availability of Documents and Records

Section 110.70, Public notice of receipt of an application. The proposed rule would amend this section to clarify that the Commission will publish in the **Federal Register** a notice of receipt for applications for amendment or renewal for the export of the nuclear equipment and material listed in § 110.70(b)(1) through (b)(5) and for applications for amendment or renewal for the import of radioactive waste. Once a notice has been published, the Commission would not publish in the **Federal Register** proposed minor amendments to the application or license. Proposed minor amendments would be posted on NRC's Web site.

Subpart H—Public Participation Procedures Concerning License Applications

Section 110.80, Basis for hearings. The proposed rule would amend this section to correct the omission of the word import from the section. This change would clarify that the procedures in 10 CFR Part 110 constitute the exclusive basis for hearings on export and import license applications.

Section 110.81, Written comments. Proposed changes would clarify that 30 days after public notice of receipt of the application means 30 days after the application is posted on the NRC Web site at *http://www.nrc.gov* or in the **Federal Register** for those applications required to be published in the **Federal Register**.

Section 110.82, Hearing request or intervention petition. This section would be amended to add language stating that hearing requests and intervention petitions are considered timely when filed no later than 30 days after publication of notice on the NRC Web site. This change would be consistent with § 110.70, which states that the Commission will notice the receipt of each specific license application for an export or import by making a copy available at the NRC Web site, *http://www.nrc.gov.* Paragraphs (c)(2) and (c)(3) would be renumbered accordingly.

Subpart I—Hearings

Section 110.112, Reporter and transcript for an oral hearing. The proposed rule would clarify the scope of information that will be made available at the NRC Web site or Public Document Room. Any portions of the transcript for an oral hearing containing classified information, Restricted Data, Safeguards information, proprietary information, or other sensitive unclassified information will not be made available to the public.

Appendix L to Part 110—Illustrative List of Byproduct Material Under NRC Export/Import Licensing Authority

Appendix L would be amended by revising the list of byproduct material to include several radionuclides that are now classified as byproduct material as a result of the Energy Policy Act of 2005, which expanded the definition of byproduct material in Section 11e. of the Atomic Energy Act.

Agreement State Compatibility

Under the ''Policy Statement on Adequacy and Compatibility of Agreement State Programs'' approved by the Commission on June 30, 1997, and published in the **Federal Register** on September 3, 1997 (62 FR 46517), this rule is classified as Compatibility Category ''NRC.'' Compatibility is not required for Category ''NRC'' regulations. The NRC program elements in this category are those that relate directly to areas of regulation reserved to the NRC by the Atomic Energy Act of 1954, as amended (AEA), or the provisions of Title 10 of the Code of Federal Regulations. Although an Agreement State may not adopt program elements reserved to NRC, it may wish to inform its licensees of certain requirements via a mechanism that is consistent with the particular State's administrative procedure laws but does not confer regulatory authority on the State.

Plain Language

The Presidential Memorandum ''Plain Language in Government Writing'' published June 10, 1998 (63 FR 31883), directed that the Government's documents be in clear and accessible language. The NRC requests comments on this proposed rule specifically with respect to the clarity and effectiveness of the language used. Comments should be sent to the address listed under the **ADDRESSES** heading.

Voluntary Consensus Standards

The National Technology Transfer and Advancement Act of 1995 (Pub. L. 104–113) requires that Federal Agencies use technical standards that are developed or adopted by voluntary consensus standards bodies unless using such a standard is inconsistent with applicable law or otherwise impractical. This action does not constitute the establishment of a standard for which the use of a voluntary consensus standard would be applicable.

Environmental Impact: Categorical Exclusion

The NRC has determined that this final rule is the type of action described in categorical exclusion 10 CFR 51.22(c)(1). Therefore, neither an environmental impact statement nor an environmental assessment has been prepared for this proposed rule.

Paperwork Reduction Act Statement

This proposed rule decreases the information collection burden on licensees to update, clarify, and correct several provisions. The public burden for this information collection is estimated to be a reduction of 6 hours, which is insignificant. Because the burden for this information collection is insignificant, Office of Management and Budget (OMB) approval of the proposed rule is not required. Existing requirements were approved by the Office of Management and Budget, approval number 3150–0036.

Abstract

The NRC is proposing to amend its regulations that govern the export and import of nuclear equipment and material. In addition to updating, clarifying, and correcting several provisions, the proposed rule would allow Category 1 and 2 quantities of material to be imported, and a general license.

The U.S. Nuclear Regulatory Commission is seeking public comment on the potential impact of the information collections contained in this proposed rule and on the following issues:

1. Is the proposed information collection necessary for the proper performance of the functions of the NRC, including whether the information will have practical utility?
2. Is the estimate of burden accurate?
3. Is there a way to enhance the quality, utility, and clarity of the information to be collected?
4. How can the burden of the information collection be minimized, including the use of automated collection techniques?

A copy of the NRC Form 670, ''Information Required for Making an Insignificant Burden Determination To Support a Decision That OMB Clearance Is Not Required,'' may be viewed free of charge at the NRC Public Document Room, One White Flint North, 11555 Rockville Pike, Room O–1 F21, Rockville, MD 20852. The NRC Form 670 and rule are available at the NRC worldwide Web site: *http://www.nrc.gov/public-involve/doc-comment/omb/index.html* for 60 days after the signature date of this notice.

Send comments on any aspect of these proposed information collections, including suggestions for reducing the burden and on the above issues, by July 23, 2009 to the Records and FOIA/Privacy Services Branch (T–5 F52), U.S. Nuclear Regulatory Commission, Washington, DC 20555–0001, or by Internet electronic mail to *INFOCOLLECTS.RESOURCE@NRC.GOV* and to Christine J. Kymn, the Desk Officer, Office of Information and Regulatory Affairs, NEOB–10202, (3150–0036), Office of Management and Budget, Washington, DC 20503. Comments received after this date will be considered if it is practical to do so, but assurance of consideration cannot be given to comments received after this date. You may also e-mail comments to *Christine_J._KymnAomb.eop.gov* or comment by telephone at 202–395–4638.

Public Protection Notification

The NRC may not conduct or sponsor, and a person is not required to respond to, a request for information or an information collection requirement unless the requesting document displays a currently valid OMB control number.

Regulatory Analysis

The NRC is proposing to amend its regulations at 10 CFR Part 110 to update, clarify, and correct several provisions in an effort to improve NRC's regulatory framework for the export and import of nuclear equipment, material, and radioactive waste. Most of these changes are administrative in nature and would result in no changes to the information collection burden or costs to the public. In addition to updating, clarifying and correcting several provisions of 10 CFR Part 110, this proposed rule would allow imports of Category 1 and 2 quantities of material under a general license instead of a specific license. The proposed rule would also revise the definition of ''radioactive waste.'' In addition, the Commission is proposing to delete the definition of ''incidental radioactive material'' and incorporate aspects of it in the revised definition of ''radioactive waste.'' These proposed changes to 10 CFR Part 110 will facilitate the licensing process for exports and imports of radioactive waste and improve the efficiency and consistency of licensing actions. These changes are not expected to result in a significant increase to the information collection burden or costs to the public.

Regulatory Flexibility Certification

As required by the Regulatory Flexibility Act of 1980, (5 U.S.C. 605(b)), the Commission certifies that this rule would not, if promulgated, have a significant economic impact on a substantial number of small entities. This rule would affect only companies exporting or importing nuclear equipment, material, and radioactive waste to and from the United States and do not fall within the scope of the definition of ''small entities'' set forth in the Regulatory Flexibility Act (5 U.S.C. 601(3)), or the Size Standards established by the NRC (10 CFR 2.810).

Backfit Analysis

The NRC has determined that a backfit analysis is not required for this rule because these amendments would not involve any provisions that would impose backfits as defined in 10 CFR Chapter I.

List of Subjects in 10 CFR Part 110

Administrative practice and procedure, Classified information, Criminal penalties, Export, Import, Intergovernmental relations, Nuclear materials, Nuclear power plants and reactors, Reporting and recordkeeping requirements, Scientific equipment.

For the reasons set out in the preamble and under the authority of the Atomic Energy Act of 1954, as amended; the Energy Reorganization Act of 1974, as amended; and 5 U.S.C. 553, the NRC is proposing to adopt the following amendments to 10 CFR Part 110.

PART 110—EXPORT AND IMPORT OF NUCLEAR EQUIPMENT AND MATERIAL

1. The authority citation for Part 110 continues to read as follows:

Authority: Secs. 51, 53, 54, 57, 63, 64, 65, 81, 82, 103, 104, 109, 111, 126, 127, 128, 129, 134, 161, 181, 182, 183, 187, 189, 68 Stat. 929, 930, 931, 932, 933, 936, 937, 948, 953, 954, 955, 956, as amended (42 U.S.C. 2071, 2073, 2074, 2077, 2092–2095, 2111, 2112, 2133, 2134, 2139, 2139a, 2141, 2154–2158, 2201, 2231–2233, 2237, 2239); sec. 201, 88 Stat. 1242, as amended (42 U.S.C. 5841; sec 5, Pub. L. 101–575, 104 Stat 2835 (42 U.S.C. 2243); sec. 1704, 112 Stat. 2750 (44 U.S.C. 3504 note); Energy Policy Act of 2005; Pub. L. 109–58, 119 Stat. 594 (2005).

Sections 110.1(b)(2) and 110.1(b)(3) also issued under Pub. L. 96–92, 93 Stat. 710 (22 U.S.C. 2403). Section 110.11 also issued under sec. 122, 68 Stat. 939 (42 U.S.C. 2152) and secs. 54c and 57d, 88 Stat. 473, 475 (42 U.S.C. 2074). Section 110.27 also issued under sec. 309(a), Pub. L. 99–440. Section 110.50(b)(3) also issued under sec. 123, 92 Stat. 142 (42 U.S.C. 2153). Section 110.51 also issued under sec. 184, 68 Stat. 954, as amended (42 U.S.C. 2234). Section 110.52 also issued under sec. 186, 68 Stat. 955 (42 U.S.C. 2236). Sections 110.80–110.113 also issued under 5 U.S.C. 552, 554. Sections 110.130–110.135 also issued under 5 U.S.C. 553. Sections 110.2 and 110.42(a)(9) also issued under sec. 903, Pub. L. 102–496 (42 U.S.C. 2151 *et seq.*).

2. In § 110.1, paragraphs (b)(2), (b)(3), (b)(4) and (b)(5) are revised to read as follows:

§ 110.1 Purpose and scope.

* * * * *

(b) * * *

(2) Persons who export uranium depleted in the isotope-235 and incorporated in commodities solely to take advantage of high density or pyrophoric characteristics. These persons are subject to the controls of the Department of Commerce under the Export Administration Act, as continued in force under Executive Order 13222 (August 22, 2001), as extended;

(3) Persons who export nuclear referral list commodities such as bulk zirconium, rotor and bellows equipment, maraging steel, nuclear reactor related equipment, including process control systems and simulators. These persons are subject to the licensing authority of the Department of Commerce pursuant to 15 CFR Part 730 *et seq.*;

(4) Persons who import deuterium, nuclear grade graphite, or nuclear equipment other than production or utilization facilities. A uranium enrichment facility is not a production facility for the purposes of import; and

(5) Shipments which are only passing through the U.S. (in bond shipments) do not require an NRC import or export license; however, they must comply with the Department of Transportation/IAEA packaging, and State transportation requirements.

* * * * *

3. In § 110.2:

a. The definition of ''Incidental radioactive material'' is removed;

b. The definitions of ''Agreement for cooperation'', ''Atomic Energy Act'', ''Classified Information'', ''Conversion facility'', ''Depleted uranium'', ''Effective kilograms of special nuclear material'', ''Embargoed'', ''Executive Branch'', ''General license'', ''Heels'', ''Medical isotope'', ''Natural uranium'', ''Non-Nuclear Weapons State'', ''NRC Public Document Room'', ''Obligations'', ''Physical security'', ''Radioactive waste'', ''Radiopharmaceutical'', ''Recipient Country'', ''Restricted destinations'', and ''Specific license'' are revised; and

c. The definitions of ''Bulk material'', ''Low-level waste compact'', and ''Nuclear Suppliers Group'' are added in alphabetical order.

The revisions and additions read as follows:

§ 110.2 Definitions.

* * * * *

Agreement for cooperation means any agreement with another nation or group of nations concluded under section 123 of the Atomic Energy Act.

Atomic Energy Act means the Atomic Energy Act of 1954, as amended (42 U.S.C. 2011 *et seq.*).

Bulk Material means any quantity of any one or more of the radionuclides listed in Table 1 of Appendix P to this part in a form that is:

(1) Not a Category 1 radioactive source;

(2) Not a Category 2 radioactive source;

(3) Not plutonium-238; and

(4) Deemed to pose a risk similar to or greater than a Category 2 radioactive source.

* * * * *

Classified Information means Classified National Security Information under Executive Order 12958, as amended, or any successor Executive Order and Restricted Data under the Atomic Energy Act.

* * * * *

Conversion facility means any facility for the transformation from one uranium chemical species to another, including conversion of uranium ore concentrates to uranium trioxide (UO3), conversion of UO3 to uranium dioxide (UO2), conversion of uranium oxides to uranium tetrafluoride (UF4) or uranium hexafluoride (UF6), conversion of UF4 to UF6, conversion of UF6 to UF4, conversion of UF4 to uranium metal, and conversion of uranium fluorides to UO2.

Depleted uranium means uranium having a percentage of uranium-235 less than the naturally occurring distribution of uranium-235 found in natural uranium (less than 0.711 weight percent uranium-235). It is obtained from spent (used) fuel elements or as byproduct tails or residues from uranium isotope separation.

* * * * *

Effective kilograms of special nuclear material means:

(1) For plutonium and uranium-233, their weight in kilograms;

(2) For uranium enriched 1 percent or greater in the isotope uranium-235, its element weight in kilograms multiplied by the square of its enrichment expressed as a decimal weight fraction; and

(3) For uranium enriched below 1 percent in the isotope uranium-235, its element weight in kilograms multiplied by 0.0001.

Embargoed means that no nuclear material or equipment can be exported to certain countries under an NRC general license. Exports to embargoed countries must be pursuant to a specific license issued by the NRC and require Executive Branch review pursuant to § 110.41.

* * * * *

Executive Branch means the Departments of State, Energy, Defense and Commerce.

* * * * *

General license means an export or import license effective without the filing of a specific application with the Commission or the issuance of licensing documents to a particular person. A general license is a type of license issued through rulemaking by the NRC and is not an exemption from the requirements in this part. A general license does not relieve a person from complying with other applicable NRC, Federal, and State requirements.

Heels means small quantities of natural, depleted or low-enriched uranium (to a maximum of 20 percent), in the form of uranium hexafluoride (UF6) left in emptied transport cylinders being returned to suppliers after delivery of the product.

* * * * *

Low-level waste compact, as used in this Part, means a compact entered into by two or more States pursuant to the Low-Level Radioactive Waste Policy Amendments Act of 1985.

* * * * *

Medical isotope, for the purposes of § 110.42(a)(9), includes molybdenum-99, iodine-131, xenon-133, and other radioactive materials used to produce a radiopharmaceutical for diagnostic, therapeutic procedures or for research and development.

Natural uranium means uranium as found in nature, containing about 0.711 percent of uranium-235, 99.283 percent of uranium-238, and a trace (0.006 percent) of uranium-234.

* * * * *

Non-Nuclear Weapon State means any State not a nuclear weapon State as defined in the Treaty on the Non-Proliferation of Nuclear Weapons.

Nuclear Weapon State means any State which has manufactured and exploded a nuclear weapon or other nuclear explosive device prior to January 1, 1967. (China, France, Russia, United Kingdom, United States)

* * * * *

NRC Public Document Room means the facility at One White Flint North, 11555 Rockville Pike (first floor), Rockville, Maryland, where certain public records of the NRC that were made available for public inspection in paper or microfiche prior to the implementation of the NRC Agencywide Documents Access and Management System, commonly referred to as ADAMS, will remain available for public inspection. It is also the place where NRC makes computer terminals available to access the Publicly

Available Records System (PARS) component of ADAMS on the NRC Web site, *http://www.nrc.gov*, and where copies can be viewed or ordered for a fee as set forth in § 9.35 of this chapter. The facility is staffed with reference librarians to assist the public in identifying and locating documents and in using the NRC Web site and ADAMS. The NRC Public Document Room is open from 7:45 a.m. to 4:15 p.m., Monday through Friday, except on Federal holidays. Reference service and access to documents may also be requested by telephone (301–415–4737 or 800–397–4209) between 8:30 a.m. and 4:15 p.m., or by e-mail (*PDR.Resource@nrc.gov*), facsimile (301–415–3548), or letter (NRC Public Document Room, One White Flint North, 11555 Rockville Pike (first floor), Rockville, Maryland 20852–2738).

* * * * *

Nuclear Suppliers Group (NSG) is a group of nuclear supplier countries which seeks to contribute to the non-proliferation of nuclear weapons through the implementation of Guidelines for nuclear exports and nuclear-related exports.

Obligations means the commitments undertaken by the U.S. Government under Atomic Energy Act section 123 agreements for cooperation in the peaceful uses of atomic energy. Imports and exports of material or equipment pursuant to such agreements are subject to these commitments, which in some cases involve an exchange of information on imports, exports, retransfers with foreign governments, peaceful end-use assurances, and other conditions placed on the transfer of the material or equipment. The U.S. Government informs the licensee of obligations attached to material or equipment being imported into the U.S. and approves changes to those obligations.

* * * * *

Physical security or *Physical protection* means measures to reasonably ensure that source or special nuclear material will only be used for authorized purposes and to prevent theft or sabotage.

* * * * *

Radioactive waste, for the purposes of this part, means any material that contains or is contaminated with source, byproduct, or special nuclear material that by its possession would require a specific radioactive material license in accordance with this Chapter and is imported or exported for the purposes of disposal in a land disposal facility as defined in 10 CFR Part 61, a disposal area as defined in Appendix A to 10 CFR Part 40, or an equivalent facility; or recycling, waste treatment or other waste management process that generates radioactive material for disposal in a land disposal facility as defined in 10 CFR Part 61, a disposal area as defined in Appendix A to10 CFR Part 40, or an equivalent facility. Radioactive waste does not include radioactive material that is—

(1) Contained in a sealed source, or device containing a sealed source, that is being returned to a manufacturer, distributor or other entity which is authorized to receive and possess the sealed source or the device containing a sealed source;

(2) A contaminant on any non-radioactive material used in a nuclear facility (including service tools and protective clothing), if the material is being shipped for recovery and beneficial use of the non-radioactive material in a nuclear facility and not solely for waste management purposes or disposal.

(3) Exempted from regulation by the Nuclear Regulatory Commission or equivalent Agreement State regulations.

(4) Generated or used in a U.S. Government waste research and development testing program under international arrangements; or

(5) Being returned by or for the U.S. Government or military to a facility that is authorized to possess the material.

Radiopharmaceutical, for the purposes of § 110.42(a)(9), means a radioactive isotope that contains byproduct material combined with chemical or biological material and is designed to accumulate temporarily in a part of the body for therapeutic purposes or for enabling the production of a useful image for use in a diagnosis of a medical condition.

Recipient Country, for the purposes of § 110.42(a)(9), means Canada, Belgium, France, Germany, and the Netherlands.

Restricted destinations means countries that are listed in 10 CFR 110.29 based on recommendations from the Executive Branch. These countries may receive exports of certain materials and quantities under a general license, but some exports to restricted destinations will require issuance of a specific license by the NRC including Executive Branch review pursuant to § 110.41.

* * * * *

Specific license means an export or import license document issued to a named person and authorizing the export or import of specified nuclear equipment or materials based upon the review and approval of an NRC Form 7 application filed pursuant to this part and other related submittals in support of the application.

* * * * *

4. Section 110.4 is revised to read as follows:

§ 110.4 Communications.

Except where otherwise specified in this part, all communications and reports concerning the regulations in this part should be addressed to the Deputy Director of the NRC's Office of International Programs, either by telephone to 301–415–2344; by mail to the U.S. Nuclear Regulatory Commission, Washington, DC 20555–0001; by hand delivery to the NRC's offices at 11555 Rockville Pike, Rockville, Maryland 20852; or, where practicable, by electronic submission, for example, via Electronic Information Exchange, or CD–ROM. Electronic submissions must be made in a manner that enables the NRC to receive, read, authenticate, distribute, and archive the submission, and process and retrieve it a single page at a time. Detailed guidance on making electronic submissions can be obtained by visiting the NRC's Web site at *http://www.nrc.gov/site-help/e-submittals.html,* by e-mail to *EIE.Resource@nrc.gov,* or by writing the Office of Information Services, U.S. Nuclear Regulatory Commission, Washington, DC 20555–0001. The guidance discusses, among other topics, the formats the NRC can accept, the use of electronic signatures, and the treatment of nonpublic information.

5. Section 110.6 is revised to read as follows:

§ 110.6 Retransfers.

(a) Retransfer of any nuclear equipment listed in § 110.8, source material, or special nuclear material, including special nuclear material produced through the use of U.S.-obligated equipment, requires authorization by the Department of Energy, unless the export to the new destination is authorized by the NRC under a specific or general license or an exemption from licensing requirements. Under certain agreements for cooperation, Department of Energy authorization also is required for the retransfer of special nuclear material produced through the use of non-U.S.-supplied nuclear material in U.S.-supplied utilization facilities. Department of Energy authorization is also required for the retransfer of obligated nuclear equipment and material (*see* definition of ''obligations'' in § 110.2).

(b) Requests for authority to retransfer are processed by the Department of

Energy, National Nuclear Security Administration, Office of International Regimes and Agreements, Washington, DC 20585.

6. In § 110.7, paragraph (c) is revised to read as follows:

§ 110.7 Information collection requirements: OMB approval.

* * * * *

(c) This part contains information collection requirements in addition to those approved under the control number specified in paragraph (a) of this section. The information collection requirements contained in §§ 110.19, 110.20, 110.21, 110.22, 110.23, 110.31, 110.32, and 110.51, and NRC Form 7 are approved under control number 3150–0027.

7. In § 110.7a, paragraph (b) is revised to read as follows:

§ 110.7a Completeness and accuracy of information.

* * * * *

(b) Each licensee or applicant for a license shall notify the Commission of information identified by the applicant or licensee as having for the regulated activity a significant implication for public health and safety or common defense and security. An applicant or licensee violates this paragraph if the applicant or licensee fails to notify the Commission of information that the applicant or licensee has identified as having a significant implication for public health and safety or common defense and security. Notification shall be provided to the Administrator of the appropriate Regional Office within two working days of identifying the information. This requirement is not applicable to information which is already required to be provided to the Commission by other reporting or updating requirements.

8. In § 110.10, paragraph (c) is revised to read as follows:

§ 110.10 General.

* * * * *

(c) The granting of an exemption does not relieve any person from complying with the regulations of other U.S. Federal and/or State government agencies applicable to exports or imports under their authority.

9. Section 110.11 is revised to read as follows:

§ 110.11 Export of IAEA safeguards samples.

A person is exempt from the requirements for a license to export special nuclear material set forth in sections 53 and 54d. of the Atomic Energy Act and from the regulations in this Part to the extent that the person exports special nuclear material in IAEA safeguards samples, if the samples are exported in accordance with § 75.8 of this chapter, or a comparable Department of Energy order, and are in quantities not exceeding a combined total of 100 grams of contained plutonium, uranium-233 and uranium-235 per facility per year. This exemption does not relieve any person from complying with Parts 71 or 73 of this chapter or any Commission order under section 201(a) of the Energy Reorganization Act of 1974 (42 U.S.C. 5841(a)).

10. Section 110.19 is revised to read as follows:

§ 110.19 Types of licenses.

Licenses for the export and import of nuclear equipment and material in this part consist of general licenses and specific licenses. A general license is effective without the filing of an application with the Commission or the issuance of licensing documents to a particular person. A specific license is issued to a named person and is effective upon approval by the Commission of an application filed pursuant to the regulations in this part and issuance of licensing documents to the applicant.

11. In § 110.20, paragraphs (a) and (d) are revised to read as follows:

§ 110.20 General license information.

(a) A person may use an NRC general license as authority to export or import nuclear equipment or material, if the nuclear equipment or material to be exported or imported is covered by the NRC general licenses described in §§ 110.21 through 110.27. If an export or import is not covered by the NRC general licenses described in §§ 110.21 through 110.27, a person must file an application with the Commission for a specific license in accordance with §§ 110.31 through 110.32.

* * * * *

(d) A general license for export may not be used if the exporter knows, or has reason to believe, that the material will be used in any illegal activity or any activity related to isotope separation, chemical reprocessing, heavy water production or the fabrication of nuclear fuel containing plutonium, unless these activities are generically authorized under an appropriate agreement for cooperation.

* * * * *

12. In § 110.21 paragraph (e) is removed and paragrahs (a)(3), (a)(4), (b), and (c) are revised to read as follows:

§ 110.21 General license for the export of special nuclear material.

(a) * * *

(3) Special nuclear material, other than plutonium-236 and plutonium-238, in sensing components in instruments, if no more than 3 grams of enriched uranium or 0.1 gram of plutonium or uranium-233 are contained in each sensing component.

(4) Plutonium-236 and plutonium-238 when contained in a device, or a source for use in a device, in quantities of less than 3.7×10^{-3} TBq (100 millicuries) of alpha activity (189 micrograms plutonium-236, 5.88 milligrams plutonium-238) per device or source.

(b) Except as provided in paragraph (d) of this section, a general license is issued to any person to export the following to any country not listed in § 110.28 or § 110.29:

(1) Special nuclear material, other than plutonium-236 and plutonium-238, in individual shipments of 0.001 effective kilogram or less (*e.g.,* 1.0 gram of plutonium, uranium-233 or uranium-235, or 10 kilograms of 1 percent enriched uranium), not to exceed 0.1 effective kilogram per year to any one country.

(2) Special nuclear material in fuel elements as replacements for damaged or defective unirradiated fuel elements previously exported under a specific license, subject to the same terms as the original export license and the condition that the replaced fuel elements must be returned to the United States within a reasonable time period.

(3) Uranium, enriched to less than 20 percent in uranium-235, in the form of uranium hexafluoride (UF6) heels in cylinders being returned to suppliers in EURATOM.

(c) Except as provided in paragraph (d) of this section, a general license is issued to any person to export plutonium-236 or plutonium-238 to any country listed in § 110.30 in individual shipments of 1 gram or less, not to exceed 100 grams per year to any one country.

* * * * *

13. Section 110.22 is revised to read as follows:

§ 110.22 General license for the export of source material.

(a) Except as provided in paragraph (f) of this section, a general license is issued to any person to export the following to any country not listed in § 110.28:

(1) Uranium or thorium, other than uranium-230, uranium-232, thorium-227, and thorium-228, in any substance in concentrations of less than 0.05 percent by weight.

(2) Thorium, other than thorium-227 and thorium-228, in incandescent gas mantles or in alloys in concentrations of 5 percent or less.

(3) Thorium-227, thorium-228, uranium-230, and uranium-232 when contained in a device, or a source for use in a device, in quantities of less than 3.7×10^{-3} TBq (100 millicuries) of alpha activity (3.12 micrograms thorium-227, 122 micrograms thorium-228, 3.7 micrograms uranium-230, 4.7 milligrams uranium-232) per device or source.

(b) Except as provided in paragraph (f) of this section, a general license is issued to any person to export uranium or thorium, other than uranium-230, uranium-232, thorium-227, or thorium-228, in individual shipments of 10 kilograms or less to any country not listed in § 110.28 or § 110.29, not to exceed 1,000 kilograms per year to any one country or 500 kilograms per year to any one country when the uranium or thorium is Canadian-obligated.

(c) A general license is issued to any person to export uranium, enriched to less than 20 percent in uranium-235, in the form of uranium hexafluoride (UF_6) heels in cylinders being returned to suppliers in EURATOM.

(d) Except as provided in paragraph (f) of this section, a general license is issued to any person to export uranium or thorium, other than uranium-230, uranium-232, thorium-227, or thorium-228, in individual shipments of 1 kilogram or less to any country listed in § 110.29, not to exceed 100 kilograms per year to any one country.

(e) Except as provided in paragraph (f) of this section, a general license is issued to any person to export uranium-230, uranium-232, thorium-227, or thorium-228 in individual shipments of 10 kilograms or less to any country listed in § 110.30, not to exceed 1,000 kilograms per year to any one country or 500 kilograms per year to any one country when the uranium or thorium is Canadian-obligated.

(f) Paragraphs (a), (b), (c), (d), and (e) of this section do not authorize the export under general license of source material in radioactive waste.

14. Section 110.23 is revised to read as follows:

§ 110.23 General license for the export of byproduct material.

(a) A general license is issued to any person to export byproduct material (*see* appendix L to this part) to any country not listed in § 110.28 and subject to the following limitations:

(1) The general license in this section does not authorize the export of byproduct material in the form of radioactive waste.

(2) The general license in this section does not authorize the export of the following radionuclides:

Americium-242m
Californium-249
Californium-251
Curium-245
Curium-247

(3) For byproduct materials listed in Table 1 of Appendix P to this part, individual shipments under a general license for export must be less than the terabecquerel (TBq) values specified in Category 2 of Table 1 unless a more restrictive requirement applies.

(4) The general license is issued for exports of the following radionuclides when contained in a device, or a source for use in a device, in quantities of less than 3.7×10^{-3} TBq (100 millicuries) of alpha activity per device or source, unless the export is to a country listed in § 110.30:

Actinium-225
Actinium-227
Californium-248
Californium-250
Californium-252
Californium-253
Californium-254
Curium-240
Curium-241
Curium-242
Curium-243
Curium-244
Einsteinium-252
Einsteinium-253
Einsteinium-254
Einsteinium-255
Fermium-257
Gadolinium-148
Mendelevium-258
Neptunium-235
Polonium-208
Polonium-209
Polonium-210
Radium-223

(5)(i) For americium-241, exports under the general license to a country listed in § 110.29 must not exceed 3.7×10^{-2} TBq (one curie) per shipment.

(ii) For americium-241, exports under the general license to a country listed in § 110.29 that exceed 3.7×10^{-2} TBq (one curie) per shipment, must be contained in industrial process control equipment or petroleum exploration equipment in quantities not exceeding 0.60 TBq (16 curies) per device and not exceeding 7.4 TBq/year (200 curies/year) to any one country.

(iii) All exports of americium are subject to the reporting requirements listed in paragraph (b) of this section.

(6) For neptunium-235 and -237, exports under the general license must not exceed one gram for individual shipment and must not exceed a cumulative total of 10 grams per year to any one country. All exports of neptunium are subject to the reporting requirements listed in paragraph (b) of this section.

(7) For polonium-210, exports under the general license, when contained in static eliminators, must not exceed 3.7 TBq (100 curies) per individual shipment.

(8)(i) For tritium in any dispersed form (*e.g.,* luminescent light sources and paint, accelerator targets, calibration standards, labeled compounds), exports under the general license must not exceed 0.37 TBq (10 curies (1.03 milligrams)) per item, not to exceed 37 TBq (1,000 curies (103 milligrams)) per shipment, or 370 TBq (10,000 curies (1.03 grams)) per year to any one country.

(ii) For tritium in any dispersed form (*e.g.,* luminescent light sources and paint, accelerator targets, calibration standards, labeled compounds), exports under the general license to the countries listed in § 110.30 must not exceed the quantity of 1.48 TBq (40 curies (4.12 milligrams)) per item, not to exceed 37 TBq (1,000 curies (103 milligrams)) per shipment or 370 TBq (10,000 curies (1.03 grams)) per year to any one country.

(iii) For tritium in luminescent safety devices installed in an aircraft, exports under the general license must not exceed 1.48 TBq (40 curies (4.12 milligrams) per light source.

(iv) The general license in this section does not authorize the export of tritium for recovery or recycle purposes.

(b) Persons making exports under the general license established by paragraph (a) of this section or under a specific license shall submit by February 1 of each year one copy of a report of all americium and neptunium shipments during the previous calendar year. This report shall be submitted to the Deputy Director, Office of International Programs at the address provided in § 110.4. The report must include:

(1) A description of the material, including quantity in TBq and grams;

(2) Approximate shipment dates; and

(3) A list of recipient countries, end users, and intended use keyed to the items shipped.

15. Section 110.24 is revised to read as follows:

§ 110.24 General license for the export of deuterium.

(a) A general license is issued to any person to export to any country not listed in § 110.28 or § 110.29 deuterium in individual shipments of 10 kilograms

or less (50 kilograms of heavy water). No person may export more than 200 kilograms (1,000 kilograms of heavy water) per year to any one country.

(b) A general license is issued to any person to export to any country listed in § 110.29 deuterium in individual shipments of 1 kilogram or less (5 kilograms of heavy water). No person may export more than 5 kilograms (25 kilograms of heavy water) per year to any one country listed in § 110.29.

§ 110.25 [Reserved]

16. Section 110.25 is added and reserved.

17. Section 110.26 is revised to read as follows:

§ 110.26 General license for the export of nuclear reactor components.

(a) A general license is issued to any person to export to a destination listed in paragraph (b) of this section any nuclear reactor component of U.S. origin described in paragraphs (5) through (9) of Appendix A to this part if—

(1) The component can be used in a light or heavy water-moderated power or research reactor; or

(2) The component is in semifabricated form and will be undergoing final fabrication or repair in those countries for either subsequent return to the United States for use in a nuclear power or research reactor in the United States or in one of the destinations listed in paragraph (b) of this section.

(b) The export of nuclear reactor components under the general license established in paragraph (a) of this section is approved to the following destinations:

Austria
Belgium
Bulgaria
Canada
Cyprus
Czech Republic
Denmark
Estonia
Finland
France
Germany
Greece
Hungary
Indonesia
Ireland
Italy
Japan
Latvia
Lithuania
Luxembourg
Malta
Netherlands
New Zealand
Philippines
Poland
Portugal
Republic of Korea
Romania
Slovak Republic
Slovenia
Spain
Sweden
Switzerland
Taiwan
United Kingdom

(c) This general license does not authorize the export of components, in final or semi-fabricated form, for research reactors capable of continuous operation above 5 MW thermal.

(d) This general license does not authorize the export of essentially complete reactors through piecemeal exports of facility components. When individual exports of components would amount in the aggregate to export of an essentially complete nuclear reactor, a facility export license is required.

(e) Persons making exports under the general license established by paragraph (a) of this section shall submit by February 1 of each year one copy of a report of all components shipped during the previous calendar year. This report must include:

(1) A description of the components keyed to the categories listed in appendix A to this part.

(2) Approximate shipment dates.

(3) A list of recipient countries and end users keyed to the items shipped.

18. In § 110.27, paragraphs (a), (b), and (f) are revised to read as follows:

§ 110.27 General license for import.

(a) Except as provided in paragraphs (b) and (c) of this section, a general license is issued to any person to import byproduct, source, or special nuclear material if the U.S. consignee is authorized to receive and possess the material under a general or specific NRC or Agreement State license issued by the Commission or a State with which the Commission has entered into an agreement under Section 274b. of the Atomic Energy Act.

(b) The general license in paragraph (a) of this section does not authorize the import of source or special nuclear material in the form of irradiated fuel if the total weight of the material exceeds 100 kilograms per shipment.

* * * * *

(f) Importers of radioactive material listed in Appendix P to this part must provide the notifications required by § 110.50.

§ 110.30 [Amended]

19. Section 110.30 is amended by adding ''China'', ''Croatia'', ''Estonia'', ''Kazakhstan'', ''Lithuania'', and ''Malta'' in alphabetical order.

20. Section 110.31 is revised to read as follows:

§ 110.31 Application for a specific license.

(a) A person shall file an application for a specific license to export or import with the Deputy Director of the NRC's Office of International Programs, using an appropriate method listed in § 110.4.

(b) Applications for export, import, combined export/import, amendment or renewal licenses or a request for an exemption from a licensing requirement under 10 CFR Part 110 shall be filed on NRC Form 7.

(c) An application for a specific license to export or import or a request for an exemption from a licensing requirement must be accompanied by the appropriate fee in accordance with the fee schedule in § 170.21 and § 170.31 of this chapter. A license application will not be processed unless the specified fee is received.

(d) Each application on NRC Form 7 shall be signed by the applicant or licensee or a person duly authorized to act for and on behalf of the applicant or licensee.

(e) Each person shall provide in the license application, as appropriate, the information specified in § 110.32. The Commission also may require the submission of additional information if necessary to complete its review.

(f) An application may cover multiple shipments and destinations.

(g) The applicant shall withdraw an application when it is no longer needed. The Commission's official files retain all documents related to a withdrawn application.

21. Section 110.32 is revised to read as follows:

§ 110.32 Information required in an application for a specific license/NRC Form 7.

(a) Name and address of applicant.

(b) Name and address of any other party, including the supplier of equipment or material, if different from the applicant.

(c) Country of origin of equipment or material, and any other countries that have processed the material prior to its import into the U.S.

Note: This is meant to include all obligations attached to the material, according to the definition of obligations in § 110.2. Licensees must keep records of obligations attached to material which they own or is in their possession.

(d) Names and addresses of all intermediate and ultimate consignees, other than intermediate consignees performing shipping services only.

(e) Dates of proposed first and last shipments.

(f) Description of the equipment or material including, as appropriate, the following:

(1) Maximum quantity of material in grams or kilograms (terabequerels or TBq for byproduct material) and its chemical and physical form.

(2) For enriched uranium, the maximum weight percentage of enrichment and maximum weight of contained uranium-235.

(3) For nuclear equipment, the name of the facility and its total dollar value.

(4) For nuclear reactors, the name of the facility, its design power level and its total dollar value.

(5) For proposed exports or imports of radioactive waste, the volume, physical and chemical characteristics, route of transit of shipment, classification (as defined in § 61.55 of this chapter) if imported or exported for direct disposal, and ultimate disposition (including forms of management or treatment) of the waste.

(6) For proposed imports of radioactive waste, the industrial or other process responsible for generation of the waste, and the status of the arrangements for disposition (*e.g.,* any agreement by a low-level waste compact commission or State to accept the material for management purposes or disposal).

(7) Description of end use by all consignees in sufficient detail to permit accurate evaluation of the justification for the proposed export or import, including the need for shipment by the dates specified.

(g)(1) For proposed exports of Category 1 quantities of material listed in Table 1 of Appendix P to this part, pertinent documentation that the recipient of the material has the necessary authorization under the laws and regulations of the importing country to receive and possess the material.

(2) For proposed exports of Category 2 quantities of material listed in Table 1 of Appendix P to this part, pertinent documentation that the recipient of the material has the necessary authorization under the laws and regulations of the importing country to receive and possess the material. This documentation must be provided to the NRC at least 24 hours prior to the shipment.

(3) Pertinent documentation shall consist of a copy of the recipient's authorization to receive and possess the material to be exported or a confirmation from the government of the importing country that the recipient is so authorized. The recipient authorization shall include the following information:

(i) Name of the recipient;

(ii) Recipient location and legal address or principal place of business;

(iii) Relevant radionuclides and radioactivity being imported or that the recipient is authorized to receive and possess;

(iv) Uses, if appropriate; and

(v) The expiration date of the recipient's authorization (if any).

22. Section 110.40 is revised to read as follows:

§ 110.40 Commission review.

(a) Immediately after receipt of a license application for an export or import requiring a specific license under this part, the Commission will initiate its licensing review and, to the maximum extent feasible, will expeditiously process the application concurrently with any applicable review by the Executive Branch.

(b) The Commission shall review a license application for export of the following:

(1) A production or utilization facility.

(2) More than five effective kilograms of high-enriched uranium, plutonium or uranium-233.

(3) An export involving assistance to end uses related to isotope separation, chemical reprocessing, heavy water production, advanced reactors, or the fabrication of nuclear fuel containing plutonium, except for exports of source material or low-enriched uranium to EURATOM or Japan for enrichment up to 5 percent in the isotope uranium-235, and those categories of exports which the Commission has approved in advance as constituting permitted incidental assistance.

(4) The initial export to a country since March 10, 1978 of source or special nuclear material for nuclear end use.

(5) An initial export to any country listed in § 110.28 or § 110.29 involving over:

(i) 10 grams of plutonium, uranium-233 or high-enriched uranium;

(ii) 1 effective kilogram of low-enriched uranium;

(iii) 250 kilograms of source material or heavy water; or

(iv) 37 TBq (1,000 curies) of tritium.

(6) The export of radioactive material listed in Table 1 of Appendix P of this part involving:

(i) Exceptional circumstances in § 110.42(e); or

(ii) Category 1 quantities of material to any country listed in § 110.28.

(c) The Commission will review export and import license applications raising significant policy issues.

(d) If the Commission has not completed action on a license application within 60 days after receipt of the Executive Branch judgment, as provided for in § 110.41, or the license application when an Executive Branch judgment is not required, it will inform the applicant in writing of the reason for delay and, as appropriate, provide follow-up reports.

23. In § 110.41, paragraphs (a)(2) and (a)(10) are revised to read as follows:

§ 110.41 Executive Branch review.

(a) * * *

(2) More than one effective kilogram of high-enriched uranium or 10 grams of plutonium or uranium-233.

* * * * *

(10) An export raising significant policy issues or subject to special limitations as determined by the Commission or the Executive Branch, including exports of radioactive material listed in Table 1 of Appendix P to this part involving exceptional circumstances in § 110.42(e).

* * * * *

24. In § 110.43, paragraphs (e) and (f) are removed and paragraph (d) is revised to read as follows:

§ 110.43 Import licensing criteria.

* * * * *

(d) With respect to the import of radioactive waste, an appropriate facility has agreed to accept and is authorized to possess the waste for management or disposal as confirmed by NRC consultations with the host State(s) and, if applicable, the low-level waste compact commission(s).

25. Section 110.44 is revised to read as follows:

§ 110.44 Physical security standards.

(a) Physical security measures in recipient countries must provide protection at least comparable to the recommendations in the current version of IAEA publication INFCIRC/225/Rev. 4 (corrected), June 1999, ''The Physical Protection of Nuclear Material and Nuclear Facilities,'' and is incorporated by reference in this part. This incorporation by reference was approved by the Director of the Office of the Federal Register in accordance with 5 U.S.C. 552(a) and 1 CFR part 51. Notice of any changes made to the material incorporated by reference will be published in the **Federal Register**. Copies of INFCIRC/225/Rev. 4 may be obtained from the Deputy Director, Office of International Programs, U.S. Nuclear Regulatory Commission, Washington, DC 20555–0001, and are available for inspection at the NRC library, 11545 Rockville Pike, Rockville,

Maryland 20852–2738. A copy is available for inspection at the National Archives and Records Administration (NARA). For information on the availability of this material at NARA, call 202–741–6030, or go to: *http://www.archives.gov/federal_register/cfr/ibr-locations.html.*

(b) Commission determinations on the adequacy of physical security measures are based on:

(1) Receipt by the appropriate U.S. Executive Branch Agency of written assurances from the relevant recipient country government that physical security measures providing protection at least comparable to the recommendations set forth in INFCIRC/225/Rev. 4 (corrected).

(2) Information obtained through country visits, information exchanges, or other sources. Determinations are made on a country-wide basis and are subject to continuing review. Appendix M to this part describes the different categories of nuclear material to which physical security measures are applied.

26. In § 110.45, paragraphs (a), (b) and (d) are revised to read as follows:

§ 110.45 Issuance or denial of license.

(a) The Commission will issue an export license if it has been notified by the State Department that it is the judgment of the Executive Branch that the proposed export will not be inimical to the common defense and security; and

(1) Finds, based upon a reasonable judgment of the assurances provided and other information available to the Federal government, that the applicable criteria in § 110.42, or their equivalent, are met; or

(2) Finds that there are no material changed circumstances associated with an export license application (except for byproduct material applications) from those existing at the time of issuance of a prior license to export to the same country, if the prior license was issued under the provisions of paragraph (a)(1) of this section.

(b) The Commission will issue an import license if it finds that:

(1) The proposed import will not be inimical to the common defense and security;

(2) The proposed import will not constitute an unreasonable risk to the public health and safety;

(3) The requirements of subpart A of part 51 of this chapter (to the extent applicable to the proposed import) have been satisfied; and

(4) With respect to a proposed import of radioactive waste, an appropriate facility has agreed to accept and is authorized to possess the waste for management and disposal as confirmed by NRC consultations with the host State and, if applicable, the low-level waste compact commission.

* * * * *

(d) If, after receiving the Executive Branch judgment that the issuance of a proposed export license will not be inimical to the common defense and security, the Commission does not issue the proposed license on a timely basis because it is unable to make the statutory determinations required under the Atomic Energy Act, the Commission will publicly issue a decision to that effect and will submit the license application to the President. The Commission's decision will include an explanation of the basis for the decision and any dissenting or separate views. The provisions in this paragraph do not apply to Commission decisions regarding applications for specific licenses to export byproduct material, including radioactive material listed in Table 1 of Appendix P to this part, or radioactive waste.

* * * * *

27. Section 110.50 is revised to read as follows:

§ 110.50 Terms.

(a) *General and specific licenses.* (1) Each license is subject to all applicable provisions of the Atomic Energy Act or other applicable law and to all applicable rules, regulations, decisions and orders of the Commission.

(2) Each license is subject to amendment, suspension, revocation or incorporation of separate conditions when required by amendments of the Atomic Energy Act or other applicable law, or by other rules, regulations, decisions or orders issued in accordance with the terms of the Atomic Energy Act or other applicable law.

(3) A licensee authorized to export or import nuclear material is responsible for compliance with applicable requirements of this chapter, unless a domestic licensee of the Commission has assumed that responsibility and the Commission has been so notified.

(4) Each license authorizes export or import only and does not authorize any person to receive title to, acquire, receive, possess, deliver, use, transport or transfer any nuclear equipment or material subject to this part.

(5) Each license issued by the NRC for the export or import of nuclear material authorizes only the export or import of that nuclear material and accompanying packaging, fuel element, hardware, or other associated devices or products.

(6) No nuclear equipment license confers authority to export or import nuclear material.

(7) Each nuclear equipment export license authorizes the export of only those items required for use in the foreign nuclear installation for which the items are intended.

(8) A licensee shall not proceed to export or import and shall notify the Commission promptly if he knows or has reason to believe that the packaging requirements of part 71 of this chapter have not been met.

(b) *Specific licenses.* (1) Each specific license will have an expiration date.

(2) A licensee may export or import only for the purpose(s) and/or end-use(s) stated in the specific export or import license issued by NRC.

(3) Unless a license specifically authorizes the export of certain foreign-obligated nuclear material or equipment, a licensee may not ship such material or equipment until:

(i) The licensee has requested and the Commission has issued an amendment to the license authorizing such shipment; or

(ii) The licensee has given at least 40 days advance notice of the intended shipment in writing to the Deputy Director, Office of International Programs (OIP); and

(iii) The Deputy Director, OIP has:

(A) Obtained confirmation, through either the Department of Energy or State, that the foreign government in question has given its consent to the intended shipment pursuant to its agreement for cooperation with the United States; and

(B) Communicated this in writing to the licensee.

(c) *Advanced notification.* (1) A licensee authorized to export or import the radioactive material listed in Appendix P to this part is responsible for notifying NRC and, in cases of exports, the government of the importing country in advance of each shipment. A list of points of contact in importing countries is available at NRC's Office of International Programs Web site, accessible on the NRC Public Web site at *http://www.nrc.gov.*

(2) The NRC's office responsible for receiving advance notifications for all export and import shipments is the NRC Operations Center. Notifications are to be e-mailed to *Hoo.Hoc@nrc.gov* (preferred method) or faxed to 301–816–5151. In the subject line of the e-mail or on the fax cover page include ''10 CFR 110.50(c) Notification.'' To contact the NRC Operations Center, use the same e-mail address or call 301–816–5100. Difficulties notifying the NRC Operations Center must be promptly reported to the Office of International Programs at 301–415–2336.

(3) Notifications may be electronic or in writing on business stationery, and must contain or be accompanied by the information which follows.

(i) For export notifications:

(A) 10 CFR part 110 export license number and expiration date;

(B) Name of the individual and licensee making the notification, address, and telephone number;

(C) Foreign recipient name, address, and end use location(s) (if different than recipient's address);

(D) Radionuclides and activity level in TBq, both for single and aggregate shipments;

(E) Make, model and serial number, for any Category 1 and 2 sealed sources, if available;

(F) End use in the importing country, if known;

(G) Shipment date;

(H) A copy of the foreign recipient's authorization or confirmation of that authorization from the government of the importing country as required by § 110.32(h) unless the authorization has already been provided to the NRC.

(ii) For import notifications:

(A) Name of individual and licensee making the notification, address, and telephone number;

(B) Recipient name, location, and address (if different than above);

(C) Name, location, address, contact name and telephone number for exporting facility;

(D) Radionuclides and activity level in TBq, both for single and aggregate shipments;

(E) Make, model and serial number, radionuclide, and activity level for any Category 1 and 2 sealed sources, if available;

(F) End use in the U.S.;

(G) Shipment date from exporting facility and estimated arrival date at the end use location;

(H) NRC or Agreement State license number to possess the import in the U.S. and expiration date.

(4) Export notifications must be received by the NRC at least 7 days in advance of each shipment, to the extent practical, but in no case less than 24 hours in advance of each shipment. Import notifications must be received by the NRC at least 7 days in advance of each shipment.

(5) Advance notifications containing the above information must be controlled, handled, and transmitted in accordance with § 2.390 of this chapter and other applicable NRC requirements governing protection of sensitive information.

(d) A specific license may be transferred, disposed of or assigned to another person only with the approval of the Commission by license amendment.

28. Section 110.51 is revised to read as follows:

§ 110.51 Amendment and renewal of licenses.

(a) *Amendments.* (1) Applications for amendment of a specific license shall be filed on NRC Form 7 in accordance with §§ 110.31 and 110.32 and shall specify the respects in which the licensee desires the license to be amended and the grounds for such amendment.

(2) An amendment is not required for:

(i) Changes in monetary value (but not amount or quantity);

(ii) Changes in the names and/or mailing addresses within the same countries of the intermediate or ultimate consignees listed on the license; or

(iii) The addition of intermediate consignees in any of the importing countries specified in the license (for a nuclear equipment license only).

(b) *Renewals.* (1) Applications for renewal of a specific license shall be filed on NRC Form 7 in accordance with §§ 110.31 and 110.32.

(2) If an application to renew a license is submitted 30 days or more before the license expires, the license remains valid until the Commission acts on the renewal application. An expired license is not renewable.

(c) *General.* In considering an application by a licensee to renew or amend a license, the Commission will apply, as appropriate, the same procedures and criteria it uses for initial license applications.

29. In § 110.53, paragraphs (a) and (b)(1) are revised to read as follows:

§ 110.53 United States address, records, and inspections.

(a) Each licensee (general or specific) shall have an office in the United States where papers may be served and where records required by the Commission will be maintained.

(b)(1) Each license applicant or licensee (general or specific) shall maintain records concerning his exports or imports. The licensee shall retain these records for five years after each export or import except that byproduct material records must be retained for three years after the date of each export or import shipment.

* * * * *

30. Section 110.60 is revised to read as follows:

§ 110.60 Violations.

(a) The Commission may obtain an injunction or other court order to prevent a violation of the provisions of—

(1) The Atomic Energy Act;

(2) Title II of the Energy Reorganization Act of 1974; or

(3) A regulation or order pursuant to those Acts.

(b) The Commission may obtain a court order for the payment of a civil penalty imposed under section 234 of the Atomic Energy Act:

(1) For violations of:

(i) Sections 53, 57, 62, 63, 81, 82, 101, 103, 104, 107, or 109 of the Atomic Energy Act;

(ii) Section 206 of the Energy Reorganization Act;

(iii) Any rule, regulation, or order issued pursuant to the sections specified in paragraph (b)(1)(i) of this section;

(iv) Any term, condition, or limitation of any license issued under the sections specified in paragraph (b)(1)(i) of this section.

(2) For any violation for which a license may be revoked under section 186 of the Atomic Energy Act of 1954.

31. In § 110.66, paragraph (b) is revised to read as follows:

§ 110.66 Enforcement hearing.

* * * * *

(b) A hearing pursuant to this subpart will be conducted under the procedures in subpart G of part 2 of this chapter.

32. In § 110.67, paragraph (a) is revised to read as follows:

§ 110.67 Criminal penalties.

(a) Section 223 of the Atomic Energy Act provides for criminal sanctions for willful violation of, attempted violation of, or conspiracy to violate, any regulation issued under sections 161b., 161i., or 161o. of the Atomic Energy Act. For purposes of section 223, all the regulations in part 110 are issued under one or more of sections 161b, 161i, or 161o, except for the sections listed in paragraph (b) of this section.

* * * * *

33. Section 110.70 is revised to read as follows:

§ 110.70 Public notice of receipt of an application.

(a) The Commission will notice the receipt of each license application, including applications for amendment or renewal, for an export or import for which a specific license is required by making a copy available at the NRC Web site, *http://www.nrc.gov.*

(b) The Commission will also publish in the **Federal Register** a notice of receipt of each license application, including applications for amendment or renewal but not applications for minor amendments, to export the following:

(1) A production or utilization facility.

(2) Five effective kilograms or more of plutonium, high-enriched uranium or uranium-233.

(3) 10,000 kilograms or more of heavy water. (*Note:* Does not apply to exports of heavy water to Canada.)

(4) Nuclear grade graphite for nuclear end use.

(5) Radioactive waste.

(c) The Commission will also publish in the **Federal Register** a notice of receipt of a license application, including applications for amendment or renewal but not applications for minor amendments, for an import of radioactive waste for which a specific license is required.

34. Section 110.80 is revised to read as follows:

§ 110.80 Basis for hearings.

The procedures in this part will constitute the exclusive basis for hearings on export and import license applications.

35. In § 110.81, paragraph (b) is revised to read as follows:

§ 110.81 Written comments.

* * * * *

(b) These comments should be submitted within 30 days after public notice of receipt of the application on the NRC Web site or in the **Federal Register** and addressed to the Secretary, U.S. Nuclear Regulatory Commission, Washington, DC 20555–0001, *Attention:* Rulemakings and Adjudications Staff.

* * * * *

36. In § 110.82, paragraph (c) is revised to read as follows:

§ 110.82 Hearing request or intervention petition.

* * * * *

(c) Hearing requests and intervention petitions will be considered timely only if filed not later than:

(1) 30 days after notice of receipt in the **Federal Register**, for those applications published in the **Federal Register**;

(2) 30 days after publication of notice on the NRC Web site at *http://www.nrc.gov;*

(3) 30 days after notice of receipt in the Public Document Room; or

(4) Such other time as may be provided by the Commission.

37. In § 110.112, paragraph (b) is revised to read as follows:

§ 110.112 Reporter and transcript for an oral hearing.

* * * * *

(b) Except for any portions containing classified information, Restricted Data, Safeguards Information, proprietary information, or other sensitive unclassified information, transcripts will be made available at the NRC Web site, *http://www.nrc.gov,* and/or at the NRC Public Document Room.

* * * * *

Appendix L to Part 110 [Amended]

38. Appendix L to part 110 is amended by adding ''Carbon 11 (C 11)'', ''Cesium 129 (Cs 129)'', ''Cobalt 57 (Co 57)'', ''Gallium 67 (Ga 67)'', ''Gold 195 (Au 195)'', ''Indium 111 (In 111)'', ''Iodine 123 (I 123)'', ''Iron 52 (Fe 52)'', ''Nitrogen 13 (N 13)'', ''Oxygen 15 (O 15)'', ''Potassium 43 (K 43)'', ''Rubidium 81 (Rb 81)'', ''Yttrium 87 (Y 87)'', and ''Yttrium 88 (Y 88)'' in alphabetical order.

Dated at Rockville, Maryland, this 17th day of June 2009.

For the Nuclear Regulatory Commission.

Annette Vietti-Cook,

Secretary of the Commission.

[FR Doc. E9–14679 Filed 6–22–09; 8:45 am]

BILLING CODE 7590–01–P

DEPARTMENT OF TRANSPORTATION

Federal Aviation Administration

14 CFR Part 39

[Docket No. FAA–2009–0553; Directorate Identifier 2008–NM–199–AD]

RIN 2120–AA64

Airworthiness Directives; Boeing Model 747–100, 747–100B, 747–200B, 747–200C, 747–200F, and 747SR Series Airplanes

AGENCY: Federal Aviation Administration (FAA), DOT.

ACTION: Notice of proposed rulemaking (NPRM).

SUMMARY: We propose to adopt a new airworthiness directive (AD) for certain Boeing Model 747–100, 747–100B, 747–200B, 747–200C, 747–200F, and 747SR series airplanes. This proposed AD would require a one-time general visual inspection for missing fasteners in certain stringer-to-stringer clip joints at the station (STA) 760 through STA 940 frames, and related investigative and corrective actions if necessary. This proposed AD results from a report of broken and cracked frame shear ties, cracks on the frame doubler and frame web, and missing fasteners in the stringer (S)–10L stringer-to-stringer clip joint at the STA 820 frame. We are proposing this AD to detect and correct missing fasteners in the stringer-to-stringer clip joints, which could result in shear tie and skin cracks and rapid in-flight decompression of the airplane.

DATES: We must receive comments on this proposed AD by August 7, 2009.

ADDRESSES: You may send comments by any of the following methods:

- *Federal eRulemaking Portal:* Go to *http://www.regulations.gov*. Follow the instructions for submitting comments.
- *Fax:* 202–493–2251.
- *Mail:* U.S. Department of Transportation, Docket Operations, M–30, West Building Ground Floor, Room W12–140, 1200 New Jersey Avenue, SE., Washington, DC 20590.
- *Hand Delivery:* U.S. Department of Transportation, Docket Operations, M–30, West Building Ground Floor, Room W12–140, 1200 New Jersey Avenue, SE., Washington, DC 20590, between 9 a.m. and 5 p.m., Monday through Friday, except Federal holidays.

For service information identified in this AD, contact Boeing Commercial Airplanes, P.O. Box 3707, Seattle, Washington 98124–2207; telephone 206–544–9990; fax 206–766–5682; e-mail *DDCS@boeing.com*; Internet *https://www.myboeingfleet.com.* You may review copies of the referenced service information at the FAA, Transport Airplane Directorate, 1601 Lind Avenue, SW., Renton, Washington. For information on the availability of this material at the FAA, call 425–227–1221 or 425–227–1152.

Examining the AD Docket

You may examine the AD docket on the Internet at *http://www.regulations.gov*; or in person at the Docket Management Facility between 9 a.m. and 5 p.m., Monday through Friday, except Federal holidays. The AD docket contains this proposed AD, the regulatory evaluation, any comments received, and other information. The street address for the Docket Office (telephone 800–647–5527) is in the **ADDRESSES** section. Comments will be available in the AD docket shortly after receipt.

FOR FURTHER INFORMATION CONTACT: Ivan Li, Aerospace Engineer, Airframe Branch, ANM–120S, FAA, Seattle Aircraft Certification Office, 1601 Lind Avenue, SW., Renton, Washington 98057–3356; telephone (425) 917–6437; fax (425) 917–6590.

SUPPLEMENTARY INFORMATION:

Comments Invited

We invite you to send any written relevant data, views, or arguments about this proposed AD. Send your comments to an address listed under the **ADDRESSES** section. Include ''Docket No. FAA–2009–0553; Directorate Identifier 2008–NM–199–AD'' at the beginning of your comments. We specifically invite comments on the overall regulatory, economic, environmental, and energy

aspects of this proposed AD. We will consider all comments received by the closing date and may amend this proposed AD because of those comments.

We will post all comments we receive, without change, to *http://www.regulations.gov,* including any personal information you provide. We will also post a report summarizing each substantive verbal contact we receive about this proposed AD.

Discussion

We have received a report indicating that, during routine maintenance, two operators found broken and cracked frame shear ties at the station (STA) 820 frame between stringer (S)–10AL and S–11L. Also, cracks were found on the frame doubler and frame web near S–11L. Further inspection showed missing fasteners in the S–10L stringer-to-stringer clip joint at the STA 820 frame. The cracks and missing fasteners were found on airplanes that had accumulated 16,087 and 16,421 total flight cycles.

Boeing analysis shows that the cracks were caused by increased load on the shear ties because of the missing fasteners in the stringer-to-stringer clip joint. Boeing investigation shows that similar cracking could occur in the frames adjacent to the tension ties if the stringer clip fasteners are not installed. Cracks in the shear ties, if not detected and corrected, could result in skin cracks and rapid in-flight decompression of the airplane.

Relevant Service Information

We have reviewed Boeing Alert Service Bulletin 747–53A2751, dated October 9, 2008. The service bulletin describes procedures for a one-time general visual inspection for missing fasteners in the S–10, S–10A, and S–11 stringer-to-stringer clip joints at the STA 760 through STA 940 frames, detailed and surface high frequency eddy current inspections to detect cracking of the adjacent frame and skin structure, installation of missing fasteners, and repairs of the shear ties, frame web, and/or skin. For airplanes on which the repair was done, the service bulletin describes procedures for detailed inspections to detect cracks of the repairs and the adjacent structure within 10 inches of the repairs. The service bulletin also specifies a detailed inspection of the repair and adjacent structure every 3,000 flight cycles.

FAA's Determination and Requirements of this Proposed AD

We are proposing this AD because we evaluated all relevant information and determined the unsafe condition described previously is likely to exist or develop in other products of the same type design. This proposed AD would require accomplishing the actions specified in the service information described previously, except as discussed under ''Differences Between the Proposed AD and Service Bulletin.''

Differences Between the Proposed AD and Service Bulletin

The service bulletin specifies to contact the manufacturer for instructions on how to repair certain conditions, but this proposed AD would require repairing those conditions in one of the following ways:

- Using a method that we approve; or
- Using data that meet the certification basis of the airplane, and that have been approved by an Authorized Representative for the Boeing Commercial Airplanes Delegation Option Authorization Organization whom we have authorized to make those findings.

Costs of Compliance

We estimate that this proposed AD would affect 84 airplanes of U.S. registry. The following table provides the estimated costs for U.S. operators to comply with this proposed AD.

ESTIMATED COSTS

Action	Work hours	Average labor rate per hour	Parts	Cost per product	Number of U.S.-registered airplanes	Fleet cost
Inspection	4	$80	$0	$320 per inspection cycle	84	$26,880 per inspection cycle.

Authority for This Rulemaking

Title 49 of the United States Code specifies the FAA's authority to issue rules on aviation safety. Subtitle I, section 106, describes the authority of the FAA Administrator. ''Subtitle VII: Aviation Programs,'' describes in more detail the scope of the Agency's authority.

We are issuing this rulemaking under the authority described in ''Subtitle VII, Part A, Subpart III, Section 44701: General requirements.'' Under that section, Congress charges the FAA with promoting safe flight of civil aircraft in air commerce by prescribing regulations for practices, methods, and procedures the Administrator finds necessary for safety in air commerce. This regulation is within the scope of that authority because it addresses an unsafe condition that is likely to exist or develop on products identified in this rulemaking action.

Regulatory Findings

We determined that this proposed AD would not have federalism implications under Executive Order 13132. This proposed AD would not have a substantial direct effect on the States, on the relationship between the national Government and the States, or on the distribution of power and responsibilities among the various levels of government.

For the reasons discussed above, I certify this proposed regulation:

1. Is not a ''significant regulatory action'' under Executive Order 12866,
2. Is not a ''significant rule'' under the DOT Regulatory Policies and Procedures (44 FR 11034, February 26, 1979), and
3. Will not have a significant economic impact, positive or negative, on a substantial number of small entities under the criteria of the Regulatory Flexibility Act.

You can find our regulatory evaluation and the estimated costs of compliance in the AD Docket.

List of Subjects in 14 CFR Part 39

Air transportation, Aircraft, Aviation safety, Incorporation by reference, Safety.

The Proposed Amendment

Accordingly, under the authority delegated to me by the Administrator, the FAA proposes to amend 14 CFR part 39 as follows:

PART 39—AIRWORTHINESS DIRECTIVES

1. The authority citation for part 39 continues to read as follows:

Authority: 49 U.S.C. 106(g), 40113, 44701.

§ 39.13 [Amended]

2. The FAA amends § 39.13 by adding the following new AD:

Boeing: Docket No. FAA–2009–0553; Directorate Identifier 2008–NM–199–AD.

Comments Due Date

(a) We must receive comments by August 7, 2009.

Affected ADs

(b) None.

Applicability

(c) This AD applies to Boeing Model 747–100, 747–100B, 747–200B, 747–200C, 747–200F, and 747SR series airplanes, certificated in any category; as identified in Boeing Alert Service Bulletin 747–53A2751, dated October 9, 2008.

Subject

(d) Air Transport Association (ATA) of America Code 53: Fuselage.

Unsafe Condition

(e) This AD results from a report of broken and cracked frame shear ties, cracks on the frame doubler and frame web, and missing fasteners in the stringer (S)–10L stringer-to-stringer clip joint at the station (STA) 820 frame. We are proposing this AD to detect and correct missing fasteners at the stringer-to-stringer clip joints, which could result in shear tie and skin cracks and rapid in-flight decompression of the airplane.

Compliance

(f) Comply with this AD within the compliance times specified, unless already done.

Inspection for Missing Fasteners

(g) Within 3,000 flight cycles after the effective date of this AD: Do a one-time general visual inspection for missing fasteners in the left and right side S–10, S–10A, and S–11 stringer-to-stringer clip joints at the STA 760 through 940 frames, in accordance with the Accomplishment Instructions of Boeing Alert Service Bulletin 747–53A2751, dated October 9, 2008. If any fasteners are missing, before further flight, do detailed and surface high frequency eddy current inspections to detect cracking of the adjacent frame and skin structure in accordance with the Accomplishment Instructions of the service bulletin. Install all missing fasteners before further flight.

(h) If any crack is found during the inspection required by paragraph (g) of this AD: Before further flight, repair any cracked shear ties, frame web, and/or skin in accordance with Boeing Service Bulletin 747–53A2751, dated October 9, 2008.

(i) If any repair is done in accordance with paragraph (h) of this AD, before 20,000 total flight cycles or within 3,000 flight cycles from the repair installation, whichever occurs later: Do a detailed inspection of the repair(s) and the adjacent structure within 10 inches of the repair(s) for cracking. Repeat the inspection thereafter at intervals not to exceed 3,000 flight cycles. If any crack is found during this inspection, before further flight, repair using a method approved in accordance with the procedures specified in paragraph (j) of this AD.

Alternative Methods of Compliance (AMOCs)

(j)(1) The Manager, Seattle Aircraft Certification Office (ACO), FAA, has the authority to approve AMOCs for this AD, if requested using the procedures found in 14 CFR 39.19. Send information to *Attn:* Ivan Li, Aerospace Engineer, Airframe Branch, ANM–120S, FAA, Seattle Aircraft Certification Office, 1601 Lind Avenue, SW., Renton, Washington 98057–3356; telephone (425) 917–6437; fax (425) 917–6590. Or, e-mail information to *9-ANM-Seattle-ACO-AMOC-Requests@faa.gov*.

(2) To request a different method of compliance or a different compliance time for this AD, follow the procedures in 14 CFR 39.19. Before using any approved AMOC on any airplane to which the AMOC applies, notify your principal maintenance inspector (PMI) or principal avionics inspector (PAI), as appropriate, in the FAA Flight Standards District Office (FSDO), or lacking a principal inspector, your local FSDO. The AMOC approval letter must specifically reference this AD.

(3) An AMOC that provides an acceptable level of safety may be used for any repair required by this AD, if it is approved by an Authorized Representative for the Boeing Commercial Airplanes Delegation Option Authorization Organization who has been authorized by the Manager, Seattle ACO, to make those findings. For a repair method to be approved, the repair must meet the certification basis of the airplane, and the approval must specifically refer to this AD.

Issued in Renton, Washington, on June 15, 2009.

Dorr M. Anderson,

Acting Manager, Transport Airplane Directorate, Aircraft Certification Service.

[FR Doc. E9–14677 Filed 6–22–09; 8:45 am]

BILLING CODE 4910–13–P

DEPARTMENT OF TRANSPORTATION

Federal Aviation Administration

14 CFR Part 39

[Docket No. FAA–2009–0565; Directorate Identifier 2008–NM–217–AD]

RIN 2120–AA64

Airworthiness Directives; Bombardier Model CL–600–2A12 (CL–601) and CL–600–2B16 (CL–601–3A, CL–601–3R, and CL–604) Airplanes

AGENCY: Federal Aviation Administration (FAA), DOT.

ACTION: Notice of proposed rulemaking (NPRM).

SUMMARY: We propose to adopt a new airworthiness directive (AD) for the products listed above. This proposed AD results from mandatory continuing airworthiness information (MCAI) originated by an aviation authority of another country to identify and correct an unsafe condition on an aviation product. The MCAI describes the unsafe condition as:

[I]ncidents of throttle jam and engine shutdowns, caused by premature wear of the rack and pinion mechanism of part number (P/N) 2100140–005 and –007 Engine Throttle Control Gearbox (ETCG), installed on Bombardier CL–601 and 604 aircraft.

* * * * *

The proposed AD would require actions that are intended to address the unsafe condition described in the MCAI.

DATES: We must receive comments on this proposed AD by July 23, 2009.

ADDRESSES: You may send comments by any of the following methods:

- *Federal eRulemaking Portal:* Go to *http://www.regulations.gov*. Follow the instructions for submitting comments.
- *Fax:* (202) 493–2251.
- *Mail:* U.S. Department of Transportation, Docket Operations, M–30, West Building Ground Floor, Room W12–140, 1200 New Jersey Avenue, SE., Washington, DC 20590.
- *Hand Delivery:* U.S. Department of Transportation, Docket Operations, M–30, West Building Ground Floor, Room W12–40, 1200 New Jersey Avenue, SE., Washington, DC, between 9 a.m. and 5 p.m., Monday through Friday, except Federal holidays.

For service information identified in this proposed AD, contact Bombardier, Inc., 400 Côte-Vertu Road West, Dorval, Québec H4S 1Y9, Canada; telephone 514–855–5000; fax 514–855–7401; e-mail *thd.crj@aero.bombardier.com*; Internet *http://www.bombardier.com*. You may review copies of the referenced service information at the FAA, Transport Airplane Directorate, 1601 Lind Avenue, SW., Renton, Washington. For information on the availability of this material at the FAA, call 425–227–1221 or 425–227–1152.

Examining the AD Docket

You may examine the AD docket on the Internet at *http://www.regulations.gov*; or in person at the Docket Operations office between 9 a.m. and 5 p.m., Monday through Friday, except Federal holidays. The AD docket contains this proposed AD, the regulatory evaluation, any comments received, and other information. The street address for the Docket Operations office (telephone (800) 647–5527) is in the **ADDRESSES** section. Comments will be available in the AD docket shortly after receipt.

FOR FURTHER INFORMATION CONTACT: Rocco Viselli, Aerospace Engineer,

Airframe and Propulsion Branch, ANE–171, FAA, New York Aircraft Certification Office, 1600 Stewart Avenue, Suite 410, Westbury, New York 11590; telephone (516) 228–7331; fax (516) 794–5531.

SUPPLEMENTARY INFORMATION:

Comments Invited

We invite you to send any written relevant data, views, or arguments about this proposed AD. Send your comments to an address listed under the **ADDRESSES** section. Include ''Docket No. FAA–2009–0565; Directorate Identifier 2008–NM–217–AD'' at the beginning of your comments. We specifically invite comments on the overall regulatory, economic, environmental, and energy aspects of this proposed AD. We will consider all comments received by the closing date and may amend this proposed AD based on those comments.

We will post all comments we receive, without change, to *http://www.regulations.gov*, including any personal information you provide. We will also post a report summarizing each substantive verbal contact we receive about this proposed AD.

Discussion

Transport Canada Civil Aviation (TCCA), which is the aviation authority for Canada, has issued Canadian Airworthiness Directive CF–2008–32R2, dated November 17, 2008 (referred to after this as ''the MCAI''), to correct an unsafe condition for the specified products. The MCAI states:

> There have been various reported incidents of throttle jam and engine shutdowns, caused by premature wear of the rack and pinion mechanism of part number (P/N) 2100140–005 and –007 Engine Throttle Control Gearbox (ETCG), installed on Bombardier CL–601 and 604 aircraft.
>
> Bombardier issued service bulletins (SB) 601–0583 (CL601/601–3A, –3R) and 604–76–004 (CL 604), introducing periodic inspection of the affected ETCG rack and pinion mechanisms for wear.
>
> Subject inspection requirement tasks have now been incorporated into the applicable CL601 and CL604 Time Limits Maintenance Checks (TLMCs) through Temporary Revisions (TR), TR 5–236 (for CL601), TR 5–236 (for CL601–3A & –3R) and TR 5–2–40 (for CL604).

The required action is revising the Airworthiness Limitations Section of the Instructions for Continued Airworthiness to incorporate new repetitive functional tests of the ETCG. You may obtain further information by examining the MCAI in the AD docket.

Relevant Service Information

Bombardier has issued Temporary Revision 5–236, dated July 25, 2008, to Section 5–10–30 of Chapter 5 of the Canadair Challenger Time Limits/Maintenance Checks, PSP 601–5; Temporary Revision 5–2–40, dated July 28, 2008, to Section 5–10–40 of Chapter 5 of the Canadair Challenger CL–604 Time Limits/Maintenance Checks; and Temporary Revision 5–236, dated March 22, 2007, to Section 5–10–30 of Chapter 5 of the Canadair Challenger Time Limits/Maintenance Checks, PSP 601A–5. The actions described in this service information are intended to correct the unsafe condition identified in the MCAI.

FAA's Determination and Requirements of This Proposed AD

This product has been approved by the aviation authority of another country, and is approved for operation in the United States. Pursuant to our bilateral agreement with the State of Design Authority, we have been notified of the unsafe condition described in the MCAI and service information referenced above. We are proposing this AD because we evaluated all pertinent information and determined an unsafe condition exists and is likely to exist or develop on other products of the same type design.

Differences Between This AD and the MCAI or Service Information

We have reviewed the MCAI and related service information and, in general, agree with their substance. But we might have found it necessary to use different words from those in the MCAI to ensure the AD is clear for U.S. operators and is enforceable. In making these changes, we do not intend to differ substantively from the information provided in the MCAI and related service information.

We might also have proposed different actions in this AD from those in the MCAI in order to follow FAA policies. Any such differences are highlighted in a Note within the proposed AD.

Costs of Compliance

Based on the service information, we estimate that this proposed AD would affect about 377 products of U.S. registry. We also estimate that it would take about 1 work-hour per product to comply with the basic requirements of this proposed AD. The average labor rate is $80 per work-hour. Based on these figures, we estimate the cost of the proposed AD on U.S. operators to be $30,160, or $80 per product.

Authority for This Rulemaking

Title 49 of the United States Code specifies the FAA's authority to issue rules on aviation safety. Subtitle I, section 106, describes the authority of the FAA Administrator. ''Subtitle VII: Aviation Programs,'' describes in more detail the scope of the Agency's authority.

We are issuing this rulemaking under the authority described in ''Subtitle VII, Part A, Subpart III, Section 44701: General requirements.'' Under that section, Congress charges the FAA with promoting safe flight of civil aircraft in air commerce by prescribing regulations for practices, methods, and procedures the Administrator finds necessary for safety in air commerce. This regulation is within the scope of that authority because it addresses an unsafe condition that is likely to exist or develop on products identified in this rulemaking action.

Regulatory Findings

We determined that this proposed AD would not have federalism implications under Executive Order 13132. This proposed AD would not have a substantial direct effect on the States, on the relationship between the national Government and the States, or on the distribution of power and responsibilities among the various levels of government.

For the reasons discussed above, I certify this proposed regulation:

1. Is not a ''significant regulatory action'' under Executive Order 12866;

2. Is not a ''significant rule'' under the DOT Regulatory Policies and Procedures (44 FR 11034, February 26, 1979); and

3. Will not have a significant economic impact, positive or negative, on a substantial number of small entities under the criteria of the Regulatory Flexibility Act.

We prepared a regulatory evaluation of the estimated costs to comply with this proposed AD and placed it in the AD docket.

List of Subjects in 14 CFR Part 39

Air transportation, Aircraft, Aviation safety, Incorporation by reference, Safety.

The Proposed Amendment

Accordingly, under the authority delegated to me by the Administrator, the FAA proposes to amend 14 CFR part 39 as follows:

PART 39—AIRWORTHINESS DIRECTIVES

1. The authority citation for part 39 continues to read as follows:

Authority: 49 U.S.C. 106(g), 40113, 44701.

§ 39.13 [Amended]

2. The FAA amends § 39.13 by adding the following new AD:

Bombardier, Inc. (Formerly Canadair):

Docket No. FAA–2009–0565; Directorate Identifier 2008–NM–217–AD.

Comments Due Date

(a) We must receive comments by July 23, 2009.

Affected ADs

(b) None.

Applicability

(c) This AD applies to all Bombardier Model CL–600–2A12 (CL–601) and CL–600–2B16 (CL–601–3A, CL–601–3R, and CL–604) airplanes, certificated in any category.

Subject

(d) Air Transport Association (ATA) of America Code 76: Engine controls.

Reason

(e) The mandatory continuing airworthiness information (MCAI) states:

There have been various reported incidents of throttle jam and engine shutdowns, caused by premature wear of the rack and pinion mechanism of part number (P/N) 2100140–005 and –007 Engine Throttle Control Gearbox (ETCG), installed on Bombardier CL–601 and 604 aircraft.

Bombardier issued service bulletins (SB) 601–0583 (CL601/601–3A, –3R) and 604–76–004 (CL 604), introducing periodic inspection of the affected ETCG rack and pinion mechanisms for wear.

Subject inspection requirement tasks have now been incorporated into the applicable CL601 and CL604 Time Limits Maintenance Checks (TLMCs) through Temporary Revisions (TR), TR 5–236 (for CL601), TR 5–236 (for CL601–3A & –3R) ant TR 5–2–40 (for CL604).

The required action is revising the Airworthiness Limitations Section of the Instructions for Continued Airworthiness to incorporate new repetitive functional tests of the ETCG.

Actions and Compliance

(f) Unless already done, do the following actions.

(1) Within 30 days after the effective date of this AD: Revise the Airworthiness Limitations section of the Instructions for Continued Airworthiness by incorporating the applicable task in the TR listed in Table 1 of this AD.

TABLE 1—TEMPORARY REVISIONS TO THE AIRWORTHINESS LIMITATIONS SECTION

For Bombardier model—	Use Canadair Challenger Temporary Revision—	Dated—	To the airworthiness limitations section of—
CL–600–2A12 (CL–601) airplanes	5–236	July 25, 2008	Section 5–10–30 of Chapter 5 of the Canadair Challenger Time Limits/Maintenance Checks, PSP 601–5.
CL–600–2B16 (CL–601–3A, and CL–601–3R) airplanes.	5–236	March 22, 2007	Section 5–10–30 of Chapter 5 of the Canadair Challenger Time Limits/Maintenance Checks, PSP 601A–5.
CL–600–2B16 (CL–604) airplanes	5–2–40	July 28, 2008	Section 5–10–40 of Chapter 5 of the Canadair Challenger CL–604 Time Limits/Maintenance Checks.

(2) For the new TLMC tasks identified in Canadair Challenger Temporary Revision 5–236, dated July 25, 2008; Temporary Revision 5–2–40, dated July 28, 2008; and Temporary Revision 5–236, dated March 22, 2007: Initial compliance with the new TLMC tasks must be carried out in accordance with the phase-in schedule detailed in the Canadair Challenger TRs 5–236 and TR 5–2–40, as applicable, after the effective date of this AD. Thereafter, except as provided by paragraph (g)(1) of this AD, no alternative TLMC task intervals may be used.

(3) When information in a TR specified in paragraph (f)(1) has been included in the general revisions of the applicable Airworthiness Limitations section, the TR may be removed from that Airworthiness Limitations section of the Instruction for Continued Airworthiness.

FAA AD Differences

Note 1: This AD differs from the MCAI and/or service information as follows: No differences.

Other FAA AD Provisions

(g) The following provisions also apply to this AD:

(1) *Alternative Methods of Compliance (AMOCs):* The Manager, New York Aircraft Certification Office (ACO), FAA, has the authority to approve AMOCs for this AD, if requested using the procedures found in 14 CFR 39.19. Send information to ATTN: Rocco Viselli, Aerospace Engineer, Airframe and Propulsion Branch, ANE–171, FAA, New York Aircraft Certification Office, 1600 Stewart Avenue, Suite 410, Westbury, New York 11590; telephone (516) 228–7331; fax (516) 794–5531. Before using any approved AMOC on any airplane to which the AMOC applies, notify your principal maintenance inspector (PMI) or principal avionics inspector (PAI), as appropriate, or lacking a principal inspector, your local Flight Standards District Office. The AMOC approval letter must specifically reference this AD.

(2) *Airworthy Product:* For any requirement in this AD to obtain corrective actions from a manufacturer or other source, use these actions if they are FAA-approved. Corrective actions are considered FAA-approved if they are approved by the State of Design Authority (or their delegated agent). You are required to assure the product is airworthy before it is returned to service.

(3) *Reporting Requirements:* For any reporting requirement in this AD, under the provisions of the Paperwork Reduction Act, the Office of Management and Budget (OMB) has approved the information collection requirements and has assigned OMB Control Number 2120–0056.

Related Information

(h) Refer to MCAI Canadian Airworthiness Directive CF–2008–32R2, dated November 17, 2008; Canadair Challenger Temporary Revision 5–236, dated July 25, 2008; Canadair Challenger CL–604 Temporary Revision 5–2–40, dated July 28, 2008; and Canadair Challenger Temporary Revision 5–236, dated March 22, 2007; for related information.

Issued in Renton, WA, on June 15, 2009.

Dorr M. Anderson,

Acting Manager, Transport Airplane Directorate, Aircraft Certification Service.

[FR Doc. E9–14678 Filed 6–22–09; 8:45 am]

BILLING CODE 4910–13–P

DEPARTMENT OF TRANSPORTATION

Federal Highway Administration

23 CFR Part 635

[FHWA Docket No. FHWA–2009–0029]

RIN 2125–AF31

Discontinuance of Form FHWA–47

AGENCY: Federal Highway Administration (FHWA), DOT.

ACTION: Notice of proposed rulemaking; request for comments.

SUMMARY: This NPRM proposes to eliminate regulations which require

contractors on National Highway System (NHS) projects of $1 million or more to submit Form FHWA–47. Since the FHWA no longer uses this information, the FHWA is proposing to eliminate this reporting requirement.

DATES: Comments must be received on or before July 23, 2009. Late-filed comments will be considered to the extent practicable.

ADDRESSES: Mail or hand deliver comments to the U.S. Department of Transportation, Dockets Management Facility, 1200 New Jersey Avenue, SE., Washington, DC 20590, or submit electronically at *http://www.regulations.gov* or fax comments to (202) 493–2251. All comments should include the docket number that appears in the heading of this document. All comments received will be available for examination and copying at the above address from 9 a.m. to 5 p.m., et., Monday through Friday, except Federal holidays. Those desiring notification of receipt of comments must include a self-addressed, stamped postcard or may print the acknowledgment page that appears after submitting comments electronically. Anyone is able to search the electronic form of all comments received into any of our dockets by the name of the individual submitting the comment (or signing the comment, if submitted on behalf of an association, business, labor union, *etc.*). You may review DOT's complete Privacy Act Statement in the **Federal Register** published on April 11, 2000 (Volume 65, Number 70, Page 19477–78), or you may visit *http://dms.dot.gov*.

FOR FURTHER INFORMATION CONTACT: Mr. Robert S. Wright, Office of Program Administration, (202) 366–4630; or Mr. Michael Harkins, Office of the Chief Counsel (202) 366–4928, Federal Highway Administration, 1200 New Jersey Ave., SE., Washington, DC 20590. Office hours are from 7:45 a.m. to 4:15 p.m., e.t., Monday through Friday, except Federal holidays.

SUPPLEMENTARY INFORMATION:

Electronic Access and Filing

You may submit or retrieve comments online through the Federal Rulemaking portal at: *http://www.regulations.gov*. Electronic submission and retrieval help and guidelines are available under the help section of the Web site. It is available 24 hours each day, 365 days each year. Please follow the instructions. An electronic copy of this document also may be downloaded from the Office of the Federal Register's home page at: *http://www.archives.gov* and the Government Printing Office's Web page at: *http://www.access.gpo.gov/nara*.

Background

During a 2003 Government Accountability Office (GAO) review of the States' highway construction costs, the GAO reviewed the FHWA's bid price data collection requirements. In a November 2003 report, GAO made recommendations to FHWA to review the usefulness and accuracy and/or under reporting of the bid price data collected.[1] In response to GAO's review the FHWA Office of Infrastructure, Office of Program Administration, in collaboration with the Office of Transportation Policy Studies, hired a consultant to review the need, quality, and value of the current data collections system in partnership with the American Association of State Highway and Transportation Officials. This review also included data collected for material and labor prices and bid tabulation. As a result, FHWA has decided to discontinue the reporting requirements for the Form FHWA–45, Bid Price Data; Form FHWA–47, Statement of Materials and Labor Used by Contractors on Highway Construction Involving Federal Funds; and Form FHWA–810, Bid Tabulation Data. This decision is documented in a May 22, 2007, policy memorandum (*see http://www.fhwa.dot.gov/federalaid/052207.cfm*) as well as in a change to the Federal-Aid Policy Guide through Transmittal 38, dated July 3, 2007 (*see http://www.fhwa.dot.gov/legsregs/directives/fapg/1trans38.htm*).

Form FHWA–45, Bid Price Data, was collected on NHS projects over $500,000. Form FHWA–45 served as a means to compute the highway construction bid price index, which is published in the document ''Price Trends for Federal-aid Highway Construction.''[2] The data were used in our ''Highway Statistics''[3] publication and by other outside sources. With the discontinuance of the Form FHWA–45, the future of FHWA's construction price trends reporting has been temporarily suspended. Currently, the FHWA has a contract for the development of a new highway construction cost indexing system, which will involve the use of the Oman System Bid Tabs data. This system utilizes construction price data extracted directly from State DOT data bases. Targeted completion for the new reporting system to be online is late FY 2009–early FY 2010.

Form FHWA–810, Bid Tabulation Data, was collected on all NHS projects. The data from the Form FHWA–810 have been used to compute national summaries on the largest contract awards and contract size statistics. The data were also used to produce State-by-State summaries on contracts awards, number of bids and average number of bids.

Section 635.126 of title 23, Code of Federal Regulations, requires Form FHWA–47, Statement of Materials and Labor Used by Contractors on Highway Construction Involving Federal Funds, which is the subject of this NPRM, to be collected on all NHS projects over $1,000,000. Form FHWA–47 served as a means to collect data related to the quantities of materials, supplies and labor used for various types of highway construction. The data reported on this form were used primarily to compute usage factors for these various materials, supplies, and labor. These factors were used to determine the economic impacts of cuts or increases in the cost of Federal-aid highway construction. Since the FHWA no longer intends to use the information submitted through Form FHWA–47, the FHWA proposes to delete section 635.126 of title 23, Code of Federal Regulations.

Executive Order 12866 (Regulatory Planning and Review) and DOT Regulatory Policies and Procedures

The FHWA has determined that this action would not be a significant regulatory action within the meaning of Executive Order 12866 or significant within the meaning of U.S. Department of Transportation regulatory policies and procedures. The enacted change is not anticipated to adversely affect, in any material way, any sector of the economy. The FHWA expects that the enacted change will alleviate confusion and provide policy consistency and clarity at little or no additional expense to public agencies or the motoring public. In addition, the enacted change would not create a serious inconsistency with another agency's action or materially alter the budgetary impact of any entitlements, grants, user fees, or loan programs. Therefore, a full regulatory evaluation is not required.

Regulatory Flexibility Act

In compliance with the Regulatory Flexibility Act (Pub. L. 96–354, 5 U.S.C. 601–612), FHWA has evaluated the effects of this change on small entities and has determined that this action would not have a significant economic

[1] *See* GAO–04–113R. (*http://www.gao.gov/new.items/d04113r.pdf*)

[2] *See* Price Trends for Federal-aid Highway Construction (*http://www.fhwa.dot.gov/programadmin/pricetrends.cfm*).

[3] *See* Highway Statistics (*http://www.fhwa.dot.gov/policy/ohpi/hss/hsspubs.cfm*).

impact on a substantial number of small entities.

Unfunded Mandates Reform Act of 1995

This proposed rule would not impose unfunded mandates as defined by the Unfunded Mandates Reform Act of 1995 (Pub. L. 104–4, 109 Stat. 48, March 22, 1995). This proposed action would not result in the expenditure by State, local, and Tribal governments, in the aggregate, or by the private sector, of $128.1 million or more in any 1 year (2 U.S.C. 1532) period to comply with these changes.

Executive Order 13132 (Federalism)

This action has been analyzed in accordance with the principles and criteria contained in Executive Order 13132 dated August 4, 1999, and FHWA has determined that this action would not have sufficient federalism implications to warrant the preparation of a federalism assessment. The FHWA has also determined that this rulemaking will not preempt any State law or State regulation or affect the States' ability to discharge traditional State governmental functions.

Executive Order 13175 (Tribal Consultation)

The FHWA has analyzed this action under Executive Order 13175, dated November 6, 2000, and believes that it would not have substantial direct effects on one or more Indian Tribes; would not impose substantial direct compliance costs on Indian Tribal governments; and would not preempt Tribal law. Therefore, a Tribal summary impact statement is not required.

Executive Order 13211 (Energy Effects)

The FHWA has analyzed this action under Executive Order 13211, Actions Concerning Regulations That Significantly Affect Energy Supply, Distribution, or Use. The FHWA has determined that it is not a significant energy action under that order because it is not likely to have a significant adverse effect on the supply, distribution, or use of energy. Therefore, a Statement of Energy Effects under Executive Order 13211 is not required.

Executive Order 12372 (Intergovernmental Review)

Catalog of Federal Domestic Assistance program Number 20.205, Highway Planning and Construction. The regulations implementing Executive Order 12372 regarding intergovernmental consultation on Federal programs and activities do apply to this program.

Paperwork Reduction Act

Under the Paperwork Reduction Act of 1995 (PRA) (44 U.S.C. 3501, *et seq.*), Federal agencies must obtain approval from the Office of Management and Budget (OMB) for each collection of information they conduct, sponsor, or require through regulations. Form FHWA–47 was previously approved under OMB Control Number 2125–0033 in July 1998, and was associated with 5 burden hours. We allowed this control number to expire because we no longer needed the information. Since this action eliminates a current reporting requirement and does not require any entity to write or submit new reports, the FHWA request for approval from OMB under the provisions of the PRA is not required.

Executive Order 12988 (Civil Justice Reform)

This action meets applicable standards in sections 3(a) and 3(b)(2) of Executive Order 12988, Civil Justice Reform, to minimize litigation, eliminate ambiguity, and reduce burden.

Executive Order 13045 (Protection of Children)

The FHWA has analyzed this action under Executive Order 13045, Protection of Children from Environmental Health Risks and Safety Risks. The FHWA certifies that this action would not concern an environmental risk to health or safety that may disproportionately affect children.

Executive Order 12630 (Taking of Private Property)

The FHWA does not anticipate that this action would effect a taking of private property or otherwise have taking implications under Executive Order 12630, Governmental Actions and Interference with Constitutionally Protected Property Rights.

National Environmental Policy Act

The FHWA has analyzed this action for the purpose of the National Environmental Policy Act of 1969 (42 U.S.C. 4321–4347) and has determined that it would not have any effect on the quality of the environment.

Regulation Identification Number

A regulation identification number (RIN) is assigned to each regulatory action listed in the Unified Agenda of Federal Regulations. The Regulatory Information Service Center publishes the Unified Agenda in April and October of each year. The RIN contained in the heading of this document can be used to cross reference this action with the Unified Agenda.

List of Subjects in 23 CFR Part 635

Contract Procedures, Force Account Construction, Physical Construction Authorization, General Material Requirements.

Issued on: June 9, 2009.

Jeffrey F. Paniati,

Acting Deputy Administrator, Federal Highway Administration.

In consideration of the foregoing, the FHWA proposes to amend chapter I of title 23, Code of Federal Regulations, as set forth below:

PART 635—CONSTRUCTION AND MAINTENANCE

1. The authority citation of part 635 continues to read as follows:

Authority: Sec. 1503 of Public Law 109–59, 119 Stat. 1144; 23 U.S.C. 101 (note), 109, 112, 113, 114, 116, 119, 128, and 315; 31 U.S.C. 6505; 42 U.S.C. 3334, 4601 *et seq.;* Sec. 1041(a), Public Law 102–240, 105 Stat. 1914; 23 CFR 1.32; 49 CFR 1.48(b).

§ 635.126 [Removed and Reserved]

2. Remove and reserve § 635.126.

[FR Doc. E9–14669 Filed 6–22–09; 8:45 am]

BILLING CODE 4910–22–P

FEDERAL COMMUNICATIONS COMMISSION

47 CFR Parts 74 and 78

[WT Docket No. 02–55, ET Docket Nos. 00–258 and 95–18; FCC 09–49]

Improving Public Safety Communications in the 800 MHz Band

AGENCY: Federal Communications Commission.

ACTION: Proposed rule.

SUMMARY: In this document the Commission proposes to modify our cost sharing requirements for the 2 GHz BAS band because the circumstances surrounding the BAS transition are very different than what was expected when the cost sharing requirements were adopted. The Commission believes that the best course of action is to propose new requirements that will address the ambiguity of applying the literal language of the current requirements to the changed circumstances, as well as balance the responsibilities for and benefits of relocating incumbent BAS operations among all new entrants in the band based on the Commission's relocation policies set forth in the *Emerging Technologies* proceeding.

DATES: Comments must be filed on or before July 14, 2009, and reply comments must be filed on or before July 24, 2009.

ADDRESSES: You may submit comments, identified by ET Docket No. WT 02–55, ET Docket No. 00–258 and ET Docket No. 95–18, by any of the following methods:

- *Federal eRulemaking Portal: http://www.regulations.gov.* Follow the instructions for submitting comments.
- *Federal Communications Commission's Web Site: http://www.fcc.gov/cgb/ecfs/.* Follow the instructions for submitting comments.
- *E-mail: [Optional: Include the E-mail address only if you plan to accept comments from the public].* Include the docket number(s) in the subject line of the message.
- *Mail: [Optional: Include the mailing address for paper, disk, or CD–ROM submissions needed/requested by your Bureau or Office. Do not include the Office of the Secretary's mailing address here.]*
- *People with Disabilities:* Contact the FCC to request reasonable accommodations (accessible format documents, sign language interpreters, CART, etc.) by e-mail: *FCC504@fcc.gov* or phone: 202–418–0530 or TTY: 202–418–0432.

For detailed instructions for submitting comments and additional information on the rulemaking process, see the **SUPPLEMENTARY INFORMATION** section of this document.

FOR FURTHER INFORMATION CONTACT: Nicholas Oros, Office of Engineering and Technology, (202) 418–0636, e-mail: *Nicholas.Oros@fcc.gov,* TTY (202) 418–2989.

SUPPLEMENTARY INFORMATION: This is a summary of the Commission's *Further NPRM of Proposed Rule Making,* WT Docket No. 02–55, ET Docket No. 00–258 and ET Docket No. 95–18, FCC 09–49, adopted June 10, 2009, and released June 12, 2009. The full text of this document is available for public inspection and copying during regular business hours in the Commission's Reference Information Center, Portals II, 445 12th Street, SW., (Room CY–A257), Washington, DC 20554. The complete text of this document also may be purchased from the Commission's copy contractor, Best Copy and Printing, Inc., Portals II, 445 12th Street, SW., Room, CY–B402, Washington, DC 20554, telephone (202) 488–5300, facsimile (202) 488–5563 or via e-mail *FCC@BCPIWEB.com.* The full text may also be downloaded at: *http://www.fcc.gov.*

Pursuant to §§ 1.415 and 1.419 of the Commission's rules, 47 CFR 1.415, 1.419, interested parties may file comments and reply comments on or before the dates indicated on the first page of this document. Comments may be filed using: (1) The Commission's Electronic Comment Filing System (ECFS), (2) the Federal Government's eRulemaking Portal, or (3) by filing paper copies. *See Electronic Filing of Documents in Rulemaking Proceedings,* 63 FR 24121 (1998).

- *Electronic Filers:* Comments may be filed electronically using the Internet by accessing the ECFS*: http://www.fcc.gov/cgb/ecfs/* or the Federal eRulemaking Portal: *http://www.regulations.gov.* Filers should follow the instructions provided on the Web site for submitting comments.
- For ECFS filers, if multiple docket or rulemaking numbers appear in the caption of this proceeding, filers must transmit one electronic copy of the comments for each docket or rulemaking number referenced in the caption. In completing the transmittal screen, filers should include their full name, U.S. Postal Service mailing address, and the applicable docket or rulemaking number. Parties may also submit an electronic comment by Internet e-mail. To get filing instructions, filers should send an e-mail to *ecfs@fcc.gov,* and include the following words in the body of the message, ''get form.'' A sample form and directions will be sent in response.
- *Paper Filers:* Parties who choose to file by paper must file an original and four copies of each filing. If more than one docket or rulemaking number appears in the caption of this proceeding, filers must submit two additional copies for each additional docket or rulemaking number.

Filings can be sent by hand or messenger delivery, by commercial overnight courier, or by first-class or overnight U.S. Postal Service mail (although we continue to experience delays in receiving U.S. Postal Service mail). All filings must be addressed to the Commission's Secretary, Office of the Secretary, Federal Communications Commission.

- The Commission's contractor will receive hand-delivered or messenger-delivered paper filings for the Commission's Secretary at 236 Massachusetts Avenue, NE., Suite 110, Washington, DC 20002. The filing hours at this location are 8 a.m. to 7 p.m. All hand deliveries must be held together with rubber bands or fasteners. Any envelopes must be disposed of before entering the building.
- Commercial overnight mail (other than U.S. Postal Service Express Mail and Priority Mail) must be sent to 9300 East Hampton Drive, Capitol Heights, MD 20743.
- U.S. Postal Service first-class, Express, and Priority mail should be addressed to 445 12th Street, SW., Washington DC 20554.

People With Disabilities: To request materials in accessible formats for people with disabilities (braille, large print, electronic files, audio format), send an e-mail to *fcc504@fcc.gov* or call the Consumer & Governmental Affairs Bureau at 202–418–0530 (voice), 202–418–0432 (tty). Filings and comments are also available for public inspection and copying during regular business hours at the FCC Reference Information Center, Portals II, 445 12th Street, SW., room CY–A257, Washington, DC 20554. They may also be purchased from the Commission's duplicating contractor, Best Copy and Printing, Inc., Portals II, 445 12th Street, SW., Room CY–B402, Washington, DC 20554, telephone: (202) 488–5300, fax: (202) 488–5563, or via e-mail *http://www.bcpiweb.com.*

Summary of Further NPRM of Proposed Rulemaking

1. In this Further NPRM of Proposed Rulemaking (Further NPRM), the Commission proposes to modify our cost sharing requirements for the 2 GHz BAS band because the circumstances surrounding the BAS transition are very different than what was expected when the cost sharing requirements were adopted. Sprint Nextel has asked us to issue a declaratory ruling regarding the cost sharing obligations between itself and the MSS and AWS–2 entrants in the band, but we decline to do so at this time. The Commission believes that the best course of action is to propose new requirements that will address the ambiguity of applying the literal language of the current requirements to the changed circumstances, as well as balance the responsibilities for and benefits of relocating incumbent BAS operations among all new entrants in the band based on the Commission's relocation policies set forth in the *Emerging Technologies* proceeding.

2. In the Report and Order and Order, the Commission allowed MSS entrants to operate in markets where the BAS incumbents have not been relocated only if they successfully coordinate operations with the BAS incumbents. In this Further NPRM the Commission seeks comment on whether MSS can operate on an unrestricted and secondary basis in nonrelocated BAS markets.

3. In this Further NPRM, the Commission also proposes to modify the current rules regarding the MSS entrants' obligation to relocate the BAS incumbents to take into account our decision in the Report and Order and Order herein to eliminate the top 30 market rule. Under the current rules, after the top 30 markets are relocated, the MSS entrants are required to complete relocation of the BAS incumbents in markets 31 and above within either three or five years of beginning operations, depending on the size of the BAS market. The Commission proposes to maintain this independent obligation on MSS entrants to relocate BAS incumbents in all markets. The Further NPRM also addresses the independent obligation of AWS entrants to relocate BAS incumbents in the band.

4. Finally, the Commission also seeks comment on whether it should further modify the BAS relocation rules to allow new entrants to begin unencumbered operations in the band before all BAS operations are relocated. The BAS transition is taking longer than initially anticipated and delaying the introduction of new services in the band. The Commission seeks comment on incentives to encourage BAS licensees to complete the relocation process promptly and without unnecessary delay.

A. Cost Sharing

5. In 2003, when fifteen megahertz of spectrum in the 1990–2000 MHz and 2020–2025 MHz bands was reallocated from MSS to Fixed and Mobile services to be used for new terrestrial services, *i.e.,* AWS–2, the Commission decided that responsibility for BAS relocation would be shared between the MSS entrants and the other new entrants to the band. In 2004, Sprint Nextel was assigned five megahertz of this spectrum in the 1990–1995 MHz band (as well as the paired 1910–1915 MHz band) in exchange for giving up spectrum it held in the 800 MHz band. Sprint Nextel also was given the obligation to relocate the BAS incumbents from the entire 35 megahertz of spectrum in the 1990–2025 MHz band, as well as the realignment of the 800 MHz band to resolve ongoing interference between public safety and commercial operations in that band. To ensure that Sprint Nextel did not receive an undeserved windfall by receiving the 1.9 GHz spectrum, Sprint Nextel was required to make an ''anti-windfall'' payment to the U.S. Treasury if the fair value of the spectrum it received, as determined by the Commission ($4.86 billion), exceeded the total of (i) the value the Commission attributed to the 800 MHz spectrum Sprint Nextel was vacating ($2.059 billion); (ii) the costs paid by Sprint Nextel to realign the 800 MHz band; and (iii) the costs paid by Sprint Nextel to clear incumbent users from the BAS spectrum (as well as the paired 1910–1915 MHz band). The Commission required Sprint Nextel to pay any monies owed to the U.S. Treasury under this calculation as part of a ''true-up'' that was originally scheduled to be accomplished within six months of the end of the 36 month 800 MHz transition period. The 36 month 800 MHz transition deadline was later established as June 26, 2008 with the true-up to occur by December 26, 2008. The Commission noted that Sprint Nextel was to complete the relocation of the BAS incumbents by September 7, 2007, prior to both the 800 MHz transition date and the subsequent true-up date.

6. In the 2004 *800 MHz R&O,* 69 FR 67823, November 22, 2005, the Commission provided that the earlier entrant to the band who relocated BAS, whether Sprint Nextel or MSS, could receive reimbursement from a later entrant for the band clearing costs consistent with the *Emerging Technology* relocation principles. However, the unique situation that led to the assignment of the 1.9 GHz spectrum to Sprint Nextel required the Commission to establish additional procedures for the band. Specifically, the Commission established in the *800 MHz R&O* that Sprint Nextel is ''entitled to seek *pro rata* reimbursement * * * from MSS licensees that enter the band'' prior to the end of the 800 MHz 36-month reconfiguration period, and it required Sprint Nextel to notify the MSS entrants of its intention to seek cost sharing. The Commission provided that if Sprint Nextel receives a cost sharing reimbursement from the MSS entrants, the amount is to be deducted from the costs it can claim credit for as BAS relocation expenses in the 800 MHz true-up. Sprint Nextel's right to receive reimbursement from MSS was limited to the costs of clearing the top thirty markets and all fixed BAS facilities, regardless of market size, based on an MSS entrant's *pro rata* share of the 1990–2025 MHz spectrum involved. The Commission notes that when Sprint Nextel undertook its commitment to relocate the BAS licensees, the Commission did not, remove the obligation of the MSS entrants to relocate the BAS licensees, nor did it eliminate the procedures that had already been put in place for doing so. Indeed, the Commission provided an opportunity for the MSS entrants to relocate BAS incumbents, particularly in the top 30 markets, so that they would not be delayed in satisfying their entry requirements. Sprint Nextel, in turn, is required to reimburse MSS entrants for a *pro rata* share of any relocation costs MSS entrants incur if they participate in the relocation of BAS before Sprint Nextel has completed its clearing of the BAS band. When the decision was made to permit Sprint Nextel to use the 1990–1995 MHz band, no BAS licensees had been relocated by the MSS entrants, and there is no evidence that the MSS entrants exercised their right to relocate any BAS incumbents subsequent to the Commission's decision.

7. In the *800 MHz MO&O, 70 FR 76704, December 28, 2005,* adopted in October 2005, the Commission affirmed its decision regarding the obligations of the MSS entrants to reimburse Sprint Nextel. The Commission pointed out that ''[Sprint] Nextel, as the first entrant, is entitled to seek *pro rata* reimbursement of eligible clearing costs from subsequent entrants, including MSS licensees.'' The Commission explained that ''it decided to end the reimbursement obligations of other entrants to [Sprint] Nextel, and any reimbursement by [Sprint] Nextel to other entrants, at the end of the 800 MHz band true-up period for administrative efficiency in the accounting process and because of the unique circumstances in [Sprint] Nextel's receipt of BAS spectrum.'' Finally, the Commission rejected a request that it move up the date by which MSS entrants had to ''enter the band'' in order for Sprint Nextel to obtain cost sharing from them, and instead decided to ''maintain the schedule previously established, *i.e.,* the true-up period.''

8. As noted, ten megahertz of the 2 GHz BAS spectrum (1995–2000 MHz and 2020–2025 MHz) has been reallocated for use by future AWS–2 licensees. In the *AWS Sixth R&O,* 69 FR 62615, October 27, 2004, the Commission established obligations for the future AWS licensees to reimburse Sprint Nextel for the BAS transition costs. As with the MSS entrants, Sprint Nextel ''is entitled to seek *pro rata* reimbursement of eligible clearing costs incurred during its 36-month 800 MHz reconfiguration period from AWS licensees that enter the band prior to the end of that period.'' Sprint Nextel ''is not entitled to reimbursement'' from the AWS licensees ''after receiving credit for its relocation cost at the 800 MHz true-up.'' The *AWS–2 NPRM of Proposed Rulemaking (AWS–2 NPRM),* 69 FR 63489, November 2, 2004, for

service rules for the AWS–2 licensees was issued concurrently with the *AWS Sixth R&O.* The *AWS–2 NPRM* states that ''we also note that if [Sprint] Nextel has received credit for BAS relocation costs in the 800 MHz true-up, late-entering AWS licensees will not have any reimbursement obligation to Nextel for such costs.'' The *AWS–2 NPRM* sought comment on a number of issues regarding cost-sharing between the AWS entrants and other new entrants to the band. These issues include whether a timetable should be adopted for AWS entrants to relocate BAS; how the reimbursement rights and obligations of each AWS licensee could be most efficiently and equitably allocated, whether on the basis of the geographic area or population covered by each license, or the value of each license as indicated by the winning auction bid, or by some other means; how the relocation costs should be allocated if not all AWS licenses are issued; how later arriving AWS licensees should be treated; and how an accounting between MSS and AWS licensees should occur.

9. Since the time the Commission adopted or proposed cost sharing procedures for Sprint Nextel, MSS, and AWS–2 in the 2 GHz BAS band, many of the assumptions underlying those procedures have not occurred. The 800 MHz transition, which was to be completed within 36 months (June 26, 2008) is not yet complete. The Commission has granted individual 800 MHz licensees waivers of the rebanding deadline, but has not modified the completion date itself. The original ''true-up date'' for calculating the anti-windfall payment, which was linked to the completion of 800 MHz rebanding and set to occur by December 26, 2008, was modified by the Commission in December 2008. The true-up is currently scheduled to occur by July 1, 2009, but it may be delayed further and could occur before 800 MHz rebanding is completed. Sprint Nextel has not completed the BAS relocation, and the BAS transition deadline has been modified several times, most recently to June 10, 2009.

10. In a letter filed June 25, 2008, Sprint Nextel asks the Commission to make a number of adjustments in deadlines and procedures that are tied to the June 26, 2008 end date of the 36-month 800 MHz reconfiguration period. Sprint Nextel posits that these deadlines should be adjusted due to the extension of the BAS relocation deadline and the grant of a large number of waivers of the 800 MHz rebanding deadline to public safety licensees. In particular, Sprint Nextel notes that the *800 MHz R&O* contains references relating the June 26, 2008 rebanding date to the MSS reimbursement obligation to Sprint Nextel for BAS relocation costs, and it requests that these references be harmonized with the postponed true-up date. On the same date, Sprint Nextel filed a lawsuit against ICO and TerreStar in the Eastern District of Virginia seeking *pro rata* reimbursement of its BAS relocation costs. On August 29, 2008, the court referred the case to the Commission and stayed all proceedings pending further decision by the Commission.

11. TerreStar responded to Sprint Nextel's June 25, 2008 letter on September 8, 2008, and ICO responded on September 9, 2008. TerreStar and ICO both argue that the MSS entrants' reimbursement obligation to Sprint Nextel terminated on June 26, 2008. TerreStar and ICO also argue that the Commission limited Sprint Nextel's ability to recover costs from MSS as part of striking ''an appropriate balance'' between Sprint Nextel and the MSS entrants' interests. ICO states that the Commission expected Sprint Nextel to complete the BAS relocation and MSS to begin operations long before reimbursement to Sprint Nextel was due on June 26, 2008. With the long delay in BAS relocation, ICO claims that MSS has no ability to earn revenue prior to the reimbursement due date or the certainty needed to plan to do so. TerreStar argues that, when the *800 MHz R&O* was adopted, Sprint Nextel could not have had a reasonable expectation of recouping expenses from TerreStar and TerreStar had a justifiable expectation that it would not have to pay these expenses because TerreStar's satellite operational milestone was after June 26, 2008; thus, it did not ''enter the band'' before the cost sharing obligation terminated. TerreStar claims that establishing a new date to terminate the cost sharing obligation would upset its settled expectations, reward Sprint Nextel for not completing the 800 MHz reconfiguration on time, and jeopardize TerreStar's initiation of service. ICO claims that because Sprint Nextel has delayed in completing the BAS relocation by the original date, the requirement that BAS in the top 30 markets be relocated before MSS can begin operations has not been satisfied, and thus ICO can not ''enter the band'' and incur a cost sharing obligation even though its satellite was successfully launched and found operational in May 2008.

12. On October 8, 2008, Sprint Nextel filed a letter asking for a declaratory ruling affirming that TerreStar and ICO must reimburse Sprint Nextel for a *pro rata* share of the eligible BAS relocation costs. Sprint Nextel argues that the reimbursement obligation did not end or ''sunset'' on June 26, 2008, as TerreStar and ICO claim, but extends at least through the end of the BAS and 800 MHz relocation projects. Sprint Nextel claims that the cost sharing obligation was connected to the end of the 800 MHz reconfiguration to avoid a windfall to Sprint Nextel and facilitate the accounting in the true-up, which has been extended, and the relevance of the June 26, 2008 date has been superseded by the extended BAS and 800 MHz deadlines. Sprint Nextel points out that TerreStar and ICO have been on NPRM of their obligations for years and cannot have reasonably expected that they would be able to circumvent the Commission's long-standing cost sharing principles. Even if one assumed that the reimbursement obligation sunset on June 26, 2008, Sprint Nextel claims that both ICO and TerreStar have entered the band by that date: ICO by transmissions from its satellite and TerreStar through its licensing activities, system build out, testing, satellite construction, and ATC operations. Sprint Nextel also requests that if it does not owe any payment to the U.S. treasury for the spectrum it is receiving, the Commission should establish 2015 as the BAS relocation reimbursement sunset date.

13. The requirements that the Commission adopted for cost sharing among Sprint Nextel, MSS and AWS–2 entrants were based on a number of assumptions regarding the transition of the 2 GHz and 800 MHz bands, MSS and AWS–2 entry, and the true-up. As reflected in the current requirements, the BAS relocation was contemplated to be complete within thirty months, and thus the Commission expected the BAS relocation to be finished by September 7, 2007, well before the end of the 800 MHz 36-month reconfiguration period, which was ultimately slated to end on June 26, 2008. Because ICO's satellite operational milestone was July 2007 and TerreStar's was November 2008 when the requirements were adopted, the Commission also expected that one and possibly both MSS operators would participate in the BAS relocation process, especially in clearing the top 30 markets, so that they would be able to commence service quickly once their satellites were successfully launched, possibly before the end of the 800 MHz reconfiguration period. Indeed, the Commission's requirements provided an opportunity for the MSS entrants to relocate BAS incumbents even while ordering Sprint Nextel to undertake the same task, and required that Sprint

Nextel reimburse the MSS entrants for any relocation expenses they incurred. For its band clearing efforts, Sprint Nextel would have been able to seek reimbursement for a portion of the relocation costs from the MSS and AWS–2 entrants who entered the band prior to the end of the 800 MHz thirty-six month reconfiguration period on June 26, 2008. The Commission also expected that the total cost of the BAS relocation, 1910–1915 MHz band clearing, and 800 MHz transition would be such that Sprint Nextel would have to make an anti-windfall payment to the United States Treasury even after receiving credit for all of its band clearing and transition costs. Consequently, even if the MSS entrants and AWS–2 licensees did not have to reimburse Sprint Nextel for BAS clearing costs because of delayed entry into the band, the Commission would have anticipated that Sprint Nextel would suffer no adverse financial consequence because the amount of the anti-windfall payment that Sprint Nextel would have to make would be reduced by the amount of any BAS relocation cost not reimbursed by the MSS entrants.

14. The circumstances now surrounding the 2 GHz band BAS transition are very different than what the Commission expected when the cost sharing requirements were adopted and explained in the *800 MHz R&O.* Neither the 800 MHz transition nor the BAS relocation has yet been completed. While the 800 MHz thirty-six month reconfiguration date of June 26, 2008 has never officially been extended, Sprint Nextel and numerous 800 MHz licensees have received waivers of that date. Moreover, the 800 MHz true-up date, which was set to occur within six months after the 800 MHz reconfiguration date, has been extended to July 1, 2009 and may be delayed further. The expected relocation costs for the 800 MHz transition is so large that Sprint Nextel does not now expect to make an anti-windfall payment.

15. In this context, the underlying assumptions of the approach taken by the Commission in the *800 MHz R&O* did not occur, such that a narrow, literal interpretation of certain language in the Commission's decision would not correspond to the stated purposes and structure of the cost sharing principles set forth in the *800 MHz R&O* and other decisions regarding the shared responsibilities of new entrants for BAS relocation. Certain specific language cannot be reasonably applied to the current circumstances.

16. On the one hand, a narrow literal interpretation of certain language in the *800 MHz R&O* could be argued as suggesting that Sprint Nextel may only be entitled to seek *pro rata* reimbursement to the extent that the MSS and AWS–2 licensees entered the 2 GHz band before the then-contemplated 36-month 800 MHz rebanding period ended, a date later established to be June 26, 2008. Moreover, because the Commission has never defined what ''entered the band'' means, applying this interpretation is problematic.

17. On the other hand, such an interpretation of the deadline would arguably undermine the stated purposes of the BAS cost-sharing regime set up by the Commission in the *800 MHz R&O,* where it discussed its decision as generally consistent with the cost-sharing principle that the licensees that ultimately benefit from the spectrum cleared by the first entrant shall bear the cost of reimbursing the first entrant for that benefit, though modified to fit the particular concerns raised in the 800 Rebanding proceeding. Specifically, as stated in the 2005 *800 MHz MO&O,* the Commission modified the traditional *Emerging Technologies* cost-sharing policy that new entrants who ultimately benefit from having the spectrum cleared should pay their share of band-clearing costs only to the extent necessary to provide ''administrative efficiency in the accounting process'' and to take into account ''the unique circumstances in Nextel's receipt of the BAS spectrum.'' In other words, the Commission limited the time that Sprint Nextel could receive reimbursements from MSS entrants so that Sprint Nextel could not get a double benefit, *i.e.,* receive reimbursements from MSS after it had received credit for these expenses in the true up. The Commission clearly allowed for the possibility that the MSS entrants would incur a cost-sharing obligation, and Sprint Nextel was explicitly allowed to pursue cost sharing from the MSS entrants by giving them NPRM within one year of adoption of the *800 MHz R&O.*

18. Nothing in the text of the relevant orders suggests that the Commission limited the time in which Sprint Nextel could seek reimbursements from MSS entrants to provide an independent benefit to MSS entrants, *e.g.,* to subsidize them or provide them certainty about their business costs. Thus, the Commission finds that the MSS entrants' cost sharing obligations must be interpreted in light of the unanticipated changed circumstances, and these obligations should not be tied to a deadline that is no longer relevant. In short, MSS entrants should pay a *pro rata* share of the BAS relocation costs unless doing so would allow Sprint Nextel to be reimbursed twice (by both the Treasury and the MSS and AWS–2 licensees). Accordingly, the most logical and appropriate interpretation of the language in the 800 MHz orders is that the MSS entrants must pay their *pro rata* share of BAS relocation costs to the extent that they enter the band before the 800 MHz rebanding or true up is complete. The difficulty with applying this interpretation is that there is no future date certain for completing either the 800 MHz rebanding or the true up.

19. The Commission thus declines to resolve the conflict between Sprint Nextel and the MSS entrants by issuing a declaratory ruling. It concludes that, given the changed circumstances surrounding the 2 GHz BAS relocation and the ambiguity between certain language in the *800 MHz R&O* and the overall purposes and structure of the BAS cost-sharing regime caused by the changed circumstances, the best course of action is to propose clearly delineated cost sharing requirements reflecting these changed circumstances to balance the responsibilities for and benefits of relocating incumbent BAS operations among Sprint Nextel, MSS, and AWS–2 based on the Commission's relocation policies set forth in the *Emerging Technologies* proceeding.

20. This Further NPRM provides an opportunity for us to address issues that are ambiguous or not specifically addressed by the current requirements. In particular, we reach the following tentative conclusions:

- Sprint Nextel may either obtain cost sharing for an eligible expense from MSS or AWS–2 entrants when those licensees ''enter the band'' *or* take credit for that expense against the anti-windfall payment to the Treasury (true-up) for the 5 megahertz of BAS spectrum (1990–1995 MHz) it obtained as part of the 800 MHz band realignment.
- The attachment of the cost sharing obligation between Sprint Nextel and MSS and AWS–2 would follow traditional *Emerging Technologies* policies, *i.e.,* the obligation to share costs among new entrants would continue to the BAS sunset date (December 9, 2013); any entity that ''enters the band'' prior to that date would be obligated to reimburse the earlier entrant that incurred the relocation expense a proportional share of cost based on the amount of spectrum assigned to it.
- As in the current requirements, the MSS cost sharing obligation to Sprint Nextel would be limited to the top 30 markets by population and all fixed BAS links.

• An MSS entrant would be deemed to have ''entered the band'' for incurring a cost sharing obligation when its satellite is found operational under its authorization milestone.

• For cost sharing purposes, Sprint Nextel would be required to share with other new entrants information on the relocation costs it has incurred as documented in its annual external audit of 2 GHz band clearing expenses and as provided to the 800 MHz Transition Administrator, as required by the *800 MHz R&O.*

21. The overall approach proposed seeks to balance the BAS relocation costs among all new entrants based on the benefit each receives of the total of 35 megahertz of cleared spectrum, consistent with our *Emerging Technologies* policies. Following BAS relocation, MSS will have access to 20 megahertz in the 2000–2020 MHz band (4/7), AWS–2 will have 10 megahertz in the 1995–2000 and 2020–2025 MHz bands (2/7), and Sprint Nextel will have 5 megahertz in the 1990–1995 MHz band (1/7). These basic proportions inform our proposals. As the Commission decided in the *800 MHz R&O,* this approach will follow the traditional relocation principle that the licensees that ultimately benefit from the spectrum cleared by the first entrant shall bear the cost of reimbursing the first entrant for the accrual of that benefit.

22. As is the case with our current requirements, the Commission tentatively concludes that Sprint Nextel may not both receive reimbursement from another new entrant and take credit for the same BAS relocation cost at the 800 MHz true-up. If another new entrant enters the band before the true-up and Sprint Nextel obtains reimbursement for relocation costs from the new entrant, Sprint Nextel may not obtain credit against the anti-windfall payment for the reimbursed costs. Further, the Commission tentatively concludes that any new entrant to the band who incurs relocation cost will be able to obtain *pro rata* reimbursement from other new entrants who enter the band prior to the BAS band sunset date of December 9, 2013. In other words, the cost-sharing obligation will no longer be linked to the 800 MHz thirty-six month reconfiguration period or the 800 MHz true-up date. Extending the relocation obligation to the BAS sunset date provides certainty to all new entrants, rather than linking the obligation to the 800 MHz thirty-six month reconfiguration period or the 800 MHz true-up date, since the timing of both of these events is less certain. Thus, the Commission tentatively concludes that the attachment of the cost sharing obligation between Sprint Nextel and MSS and AWS–2 should follow the traditional *Emerging Technologies* policies in obligating new entrants to share the costs of relocating the BAS incumbents. A later entrant's cost-sharing obligation to the earlier entrant who cleared the spectrum shall be in proportion to the spectrum assigned to the later entrant. For example, if a future AWS licensee is assigned 5 megahertz of spectrum in the band on a nationwide basis, the licensee will be responsible for 1/7 of the total spectrum clearing costs if it enters the band before the sunset date.

23. In the *800 MHz R&O,* the MSS entrants' cost sharing obligation to Sprint Nextel was limited to the cost of clearing the thirty largest markets (by population) and all fixed BAS links. This was done because the MSS entrants were required to clear the thirty largest markets and all fixed BAS links before they could begin operations, but were not required to relocate BAS in the other markets until later. Because this exception to the general cost-sharing principle was clearly established in the *800 MHz R&O* in 2004, we propose to continue to limit the MSS entrants' cost-sharing obligation in this way even though we are now eliminating the top 30 market rule.

24. Consequently, the Commission tentatively concludes that Sprint Nextel's right to seek reimbursement from any MSS entrant entering before the sunset date will be limited to the costs Sprint Nextel incurred for clearing the top thirty markets and for relocating all fixed BAS facilities, regardless of market size, and to an MSS entrant's *pro rata* share of the 1990–2025 MHz spectrum. Sprint Nextel claims that under this approach MSS would only be responsible for approximately 27 percent of the total BAS relocation expenses, which is substantially less than the 57 percent of the cleared BAS spectrum assigned to the two MSS entrants. The Commission also seeks comment on whether it should require MSS entrants to pay a *pro rata* share of all BAS relocation costs, regardless of market size.

25. In addition, regarding MSS-to-MSS cost sharing, under the original requirements for MSS entrants to relocate the BAS incumbents, all MSS entrants share in the relocation costs on a *pro rata* basis depending on the amount of spectrum each is assigned. Later entering MSS operators are required to reimburse the earlier MSS entrants who clear the spectrum a *pro rata* share of the earlier MSS entrants' band clearing costs. After the BAS transition is completed, all of the MSS entrants are to ''true-up'' their costs to ensure that each MSS entrant pays a *pro rata* share of the relocation costs based on the amount of spectrum assigned. The Commission proposes to retain these MSS-to-MSS cost sharing requirements. The Commission notes that these inter-service and intra-service cost sharing requirements can work in tandem. For example, if Sprint Nextel was reimbursed from only one MSS entrant, that entrant could in turn seek reimbursement of what it owed Sprint Nextel from another MSS entrant. It appears that Sprint Nextel has asked both ICO and TerreStar to pay equal amounts of relocation costs based on their equal amount of assigned spectrum (*i.e.,* ten megahertz each), consistent with current requirements. The Commisssion seeks comment on whether Sprint Nextel should be allowed to request relocation costs for BAS operations in all of the 20 megahertz of spectrum allocated for MSS from a single MSS entrant that may, in turn, seek reimbursement from another MSS entrant.

26. The Commission also tentatively concludes that AWS–2 licensees will be responsible for reimbursing earlier entrants for relocating BAS operations in their assigned geographic areas, but determining how to apportion a licensee's *pro rata* share will depend on future Commission action to adopt service rules for the AWS licensees in the 1995–2000 MHz and 2020–2025 MHz band. These licenses may be issued either on a nationwide basis or for geographic areas, and could include all or only a portion of the allocated bandwidth. If licenses are issued for geographic areas, the geographic areas are not likely to coincide with the BAS market boundaries and licenses for geographic areas may be issued at different times. Another factor that our service rules will have to address is apportioning the reimbursement costs fairly among AWS licensees. For example, some licensees' service areas cover cleared spectrum for which Sprint Nextel may claim a credit at the true-up, thus preventing Sprint from seeking cost sharing from those AWS licensees. Other AWS licensees' service areas may cover cleared spectrum not claimed by Sprint for a true up credit and thus subject to cost sharing. These factors will complicate the calculation of cost sharing for the AWS entrants to the band. In the 2004 *AWS–2 NPRM* on service rules for the AWS entrants to the band, the Commission sought comment on a number of issues regarding the licensing scheme for the AWS entrants

and the cost-sharing obligations between the AWS entrants and other new entrants to the band. Because the licensing scheme for the AWS entrants to the band has not yet been determined, we are not making proposals here for apportioning an AWS licensee's *pro rata* share for cost-sharing with other new service entrants or between AWS–2 entrants beyond those made in the 2004 *AWS–2 NPRM.* The Commission intends to adopt specific cost-sharing procedures for the AWS entrants when service rules are adopted for the 1995–2000 MHz and 2020–2025 MHz bands.

27. The cost sharing scheme that the Commission adopted in 2004 required that MSS and AWS entrants reimburse Sprint Nextel for the BAS relocation costs after they ''enter the band,'' but did not define the term. For clearing other bands under our *Emerging Technologies* policies, the Commission's rules usually make a distinction between determining when a new entrant must relocate an incumbent operation before it can operate and when a new entrant incurs a cost sharing obligation to an earlier entrant who relocated an incumbent. Generally, Commission rules rely on an interference analysis to determine when a new entrant must relocate an incumbent. On the other hand, a later entrant is generally required to share in the cost that an earlier entrant has incurred in relocating an incumbent if the subsequent entrant would have been in a position to have caused interference to the incumbent. Because the incumbent has already been relocated, the cost sharing determination is not usually based on a rigorous interference analysis but often on a simplified proximity test for ease in administration. The rules may vary from these general principles depending on the technical characteristics of the specific services involved in the relocation.

28. Because the Commission has already determined that MSS and AWS–2 entry in the 2 GHz band requires that all BAS operations in the band be relocated to avoid interference between the new and incumbent services, we only need to determine here when a new entrant ''enters the band'' for purposes of the attachment of the cost sharing obligation. In this regard, we are mindful that in other bands a new entrant incurs a cost sharing obligation at the time the subsequent entrant would be in a position to have caused interference to the now relocated incumbent.

29. With this principle in mind, the Commission tentatively concludes to adopt the following requirements for determining when the MSS entrants have ''entered the band.'' The Commission proposes that an MSS entrant will have entered the band and incurred a cost sharing obligation when it certifies that its satellite is operational for purposes of meeting its operational milestone. For the 2000–2020 MHz band, a satellite is considered operational based upon the occurrence of transmissions between the satellite and an authorized earth station using the 2000–2020 MHz and 2180–2200 MHz bands. The satellite systems which the MSS entrants are deploying are capable of providing nationwide coverage. The customer equipment transmitting to the satellites in this band are therefore capable of causing interference to any of the BAS incumbents in the local area in which that equipment is used. The MSS entrants having an operational satellite is therefore analogous to the Personal Communications Service (PCS) or AWS entrants building a base station in proximity to the incumbent fixed microwave links in the prior spectrum clearings. Like the PCS and AWS entrants, an MSS entrant with an operational satellite is in a position to cause interference to the incumbents and therefore should incur a cost sharing obligation to an earlier entrant who has relocated the incumbents. Simplicity of administration is especially important in the case of BAS because there is no clearinghouse to determine when a party has ''entered the band'' or to parse out the relocation costs on a BAS receiver site-by-site basis.

30. The AWS entrants will operate terrestrial networks and thus the definition of ''enter the band'' which the Commission proposes for the MSS entrants would not be appropriate for AWS. Although no service rules have been adopted for the AWS portions of the 1990–2025 MHz band, the Commission expects that the AWS entrants will deploy terrestrial networks wherein fixed base stations communicate with mobile radios. Because both the AWS entrants and BAS incumbents will employ mobile radios, the interference scenarios will be more complicated than with the fixed point-to-point microwave incumbents being relocated in the PCS, AWS, and MSS downlink bands addressed by other relocation rules. Furthermore, there is no clearinghouse for the BAS relocation that will be able to determine when interference between the AWS entrants and previously relocated BAS incumbents would likely occur. These two facts—the complicated interference scenarios and lack of clearinghouse—require that the test for determining when AWS entrants incur a cost sharing obligation be simple and easy to apply.

31. As one option, the Commission proposes to specify that AWS entrants in the 1990–2025 MHz band be found to have ''entered the band'' and incur a cost sharing obligation upon grant of the long form applications for their licenses. This would provide a clear and easy-to-administer standard and provide certainty for all parties involved. While this proposed requirement does depart somewhat from other relocation rules, it is not entirely inconsistent. Because of the mobile nature of BAS, once the AWS entrant is licensed any deployment of its services could potentially have resulted in interference to mobile BAS incumbents.

32. The Commission also seeks comment on an alternate approach for when AWS entrants should be found to ''enter the band.'' An AWS entrant in the 1990–2025 MHz band could be found to ''enter the band'' and incur a cost sharing obligation when it activates a base station in an AWS–2 license area that overlaps a cleared DMA. The Commission notes that this alternate approach presents a number of issues that could make it difficult to implement. Because there is no clearinghouse for the 1990–2025 MHz band, there currently is no entity that is responsible for tracking when the AWS–2 licensee activates a base station and for determining which DMA's are overlapped by the base station. Each DMA will potentially have a separate ''enter the band'' date, and it is likely that, whatever service rules we ultimately adopt for this band, any given AWS–2 licensee would trigger numerous ''enter the band'' dates. Consequently, the Commission seeks comment on whether, under this approach, an AWS–2 licensee that activates a first base station should incur a cost sharing obligation only for relocating BAS in that DMA or should it incur its entire cost sharing obligation for all DMAs that overlap its service area. Also, under this approach AWS–2 licensees could potentially delay the initiation of service, and thus seek to avoid incurring a cost sharing obligation, until after the BAS sunset date of December 9, 2013, making it more difficult for Sprint Nextel to decide whether to take credit for BAS relocation cost in the 800 MHz true-up because of the uncertainty as to whether AWS–2 licensees will share in the cost of the BAS relocation. The Commission seeks comment on how, if we adopt this alternative approach, we could prevent

AWS–2 licensees from avoiding their cost sharing obligation through delay. If AWS–2 licensee's are able to avoid incurring a cost sharing obligation through delay, the Commission also seeks comment on how to make it easier for Sprint Nextel to determine whether to take credit for BAS relocation cost in the 800 MHz true-up despite the uncertainty as to whether the AWS–2 will share in the BAS relocation cost.

33. When the Commission adopted the requirements allowing Sprint Nextel to pursue reimbursement of BAS relocation costs from MSS and AWS entrants, it did not specify when the MSS and AWS entrants would owe reimbursement to Sprint Nextel. Generally, in other band clearings the later new entrant has to pay its reimbursement costs when beginning operations or shortly thereafter. For example, in the relocation of fixed microwave links by AWS entrants in the 2110–2150 MHz band and by MSS entrants in the 2180–2200 MHz band (this is the paired downlink band for the MSS at issue in this proceeding), the AWS and MSS entrant must notify a clearinghouse prior to initiating operations. The clearinghouse determines if the AWS or MSS entrant must reimburse a prior new entrant for moving an incumbent licensee, and the AWS or MSS entrant has 30 days to pay the reimbursement costs. Similar rules are followed for the relocation of BRS incumbents in the 2150–2162 MHz band by AWS entrants.

34. As the Commission discussed in the Further NPRM, there are unique circumstances in this case that require additional consideration. The Commission has already determined to permit MSS entrants to begin operations in the near term, even if this were to occur before they have actually satisfied the cost sharing reimbursement obligations that would attach under our proposals here. Here, we seek comment on various approaches that the Commission might take concerning when such reimbursements are owed.

35. If the Commission were to apply a similar scheme as that followed by our relocation rules in other bands with the BAS transition in the 2 GHz band, once the later entrant has entered the band, it may not begin operations until it has reimbursed the earlier entrant that relocated BAS incumbents for the later entrant's *pro rata* share of the relocation costs for all BAS markets that have been transitioned as of the date that the later entrant entered the band (or, in the case of MSS, the later of these two dates: the date MSS is determined to have entered the band or the earliest date MSS is permitted to begin operations under our rules). Thereafter, as the BAS relocation continues and each additional BAS market is transitioned to the new channel plan, the new entrant would have to pay its share of the cost of transitioning that market within thirty days of being notified of the market transitioning or cease operations in that band. Under this approach, it may be more reasonable to expect an MSS entrant to pay reimbursement costs only when a BAS market is cleared and it can operate on a primary basis, rather than to pay these costs on a per station basis in nonrelocated BAS markets where it may operate only on a secondary basis. The entrant who is relocating the BAS incumbents could have the responsibility of notifying the other new entrants and the Commission of the transition of each BAS market. The Commission seeks comment generally on this approach, or variations to it.

36. The Commission also seeks comment, given the unique circumstances in this case, on alternative approaches for when MSS entrants should be required to reimburse Sprint Nextel for their *pro rata* share of the BAS relocation costs. Because the MSS entrants have not yet begun to provide commercial services, they do not have an established revenue stream. Consequently, it may be difficult for the MSS entrants to reimburse Sprint Nextel immediately for their *pro rata* share of costs for all of the markets that have transitioned when the MSS entrant enters the band or begins service, as proposed. Rather than require that, when an MSS entrant is ready to begin operations, it pay its reimbursement share for all markets cleared when it either entered the band or was permitted to begin operations under the rules, should MSS entrants only initially have to pay reimbursement costs for those markets in which they choose to operate? If so, what schedule should they follow for reimbursing costs associated with the remaining markets—when they start providing service in those markets, or under a different timetable? The Commission also seeks comment on establishing a reimbursement scheme that is not specifically tied to MSS entry in each market. For example, should MSS entrants be allowed to delay payment of some portion of their *pro rata* share of reimbursement costs until the BAS relocation is complete, or some other date? Would this provide some needed certainty to MSS entrants that they could begin operating? Should the MSS entrants' payments be linked to the pace of the BAS transition—*e.g.,* as additional BAS markets are transitioned, should MSS entrants be required to make additional payments? The Commission also seeks comment on how any of these approaches would affect the true-up, particularly if Sprint Nextel is owed monies that MSS entrants have not yet paid when the true-up occurs. More generally, the Commission also seeks comment on whether any of these approaches would undermine our goal of ensuring that later entrants reimburse, on a *pro rata* basis, the first entrant that paid for relocation, and on what actions we should take if MSS entrants fail to pay.

37. Finally, the Commission tentatively concludes that, for cost sharing purposes, Sprint Nextel would be required to share with other new entrants information on the relocation costs it has incurred as documented in its annual external audit of 2 GHz band clearing expenses and as provided to the 800 MHz Transition Administrator, as required by the *800 MHz R&O.* As part of the financial reconciliation process in the 800 MHz true-up, Sprint Nextel is required to conduct an annual external audit of its 2 GHz band clearing expenses and to provide this audit to the Transition Administrator for the 800 MHz rebanding and true-up. Sprint Nextel also is to report to the Transition Administrator the amount of reimbursement it receives from other entrants to the band. With this information, the Transition Administrator will be able to ensure that Sprint Nextel receives the proper amount of credit against the anti-windfall payment for BAS relocation. However, the annual external audit provides data on total expenses, rather than by market, and the Transition Administrator is under no obligation to analyze, audit or verify the data that Sprint Nextel supplies on the cost of clearing the 2 GHz spectrum. Furthermore, if an MSS or AWS licensee enters the band after the true-up occurs, the Transition Administrator will not be present to calculate the amount that Sprint Nextel claims the new entrant owes. To facilitate the cost sharing process, the Commission proposes to require that Sprint Nextel share with any other new entrant who owes it relocation reimbursement information about its relocation costs as documented in its annual external audit and as provided to the Transition Administrator. Similarly, if a new entrant other than Sprint Nextel relocates a BAS incumbent and seeks cost sharing from later entrants, the first entrant would be required to provide the later entrants with documented

relocation costs. The Commission seeks comment.

38. The Commission seeks comment on all of the proposed changes to the cost-sharing requirements for the 1990–2025 MHz BAS relocation. It seeks comment on this proposal as well as alternative proposals.

B. BAS–MSS Spectrum Sharing

39. In the accompanying Report and Order and Order, the Commission eliminated the top 30 market rule which prevented the MSS entrants from beginning operations before the BAS incumbents in the thirty largest markets by population and fixed BAS links in all markets had been relocated. The MSS entrants are now able to operate with primary status in those markets where the BAS incumbents have been relocated to the new channel plan and with secondary status in nonrelocated markets subject to coordination.

40. The Commission concluded that coordination was necessary in nonrelocated markets because we were not persuaded by the record that MSS could conduct unrestricted operations in these markets without causing interference to the BAS incumbents. TerreStar asserts that, based on its probabilistic analysis, interference from MSS handsets to BAS operations is unlikely to occur, and thus suggests that coordination may not be necessary. Rather, it would cease operations if a BAS incumbent experiences interference. MSTV disputes these claims. The Commission is concerned that if interference occurs to BAS licensees in nonrelocated markets, that interference will harm BAS operations and could prove difficult to resolve because the location of the handset which is the source of the interference may not be easily determined. Such interference could have a significant impact given the number of major markets that will transition toward the end of Sprint Nextel's relocation schedule. Nonetheless, the Commission invites additional analysis on whether MSS can operate on an unrestricted and secondary basis in nonrelocated BAS markets. Commenters should include evidence on the likelihood of harmful interference occurring to the nonrelocated BAS incumbents from MSS operations.

41. In the Report and Order and Order the Commission also recognizes that interference could occur to BAS incumbents in a nonrelocated market from MSS operations in an adjacent market where BAS has been relocated. Consequently, it requires that MSS may not operate mobile terminals within line-of-sight of BAS receive sites in markets where the BAS transition has not been completed, absent coordination. The Commission seeks comment on whether this requirement continues to be necessary.

C. MSS Relocation Obligations

42. Our current rules provide that the MSS entrants may not begin operations until BAS in the top 30 markets and all fixed BAS links have been relocated. Once an MSS entrant begins operations, all of the MSS entrants jointly have the responsibility to relocate the BAS incumbents in markets 31–100 within three years and the remaining markets (*i.e.,* 101 and above) within five years. The rule establishes a relocation obligation on MSS that is independent of other new entrants' relocation activity in the band, and provides a market tier approach for completing the BAS relocation that is pegged to beginning operations when the top 30 markets and fixed links are relocated.

43. The accompanying Report and Order and Order removes the requirement that BAS in the top 30 markets and all fixed BAS links must be relocated before MSS can begin operations, but maintains the obligation for the MSS entrants to relocate the BAS incumbents once an MSS entrant begins operations. Thus, this rule needs further modification to specify when an MSS entrant ''begins operations'' for purposes of completing BAS relocation and to account for the relocation of markets 1–30 along with markets 31–100.

44. The Commission proposes to trigger the obligation of an individual MSS operator to relocate BAS incumbents within three or five years, depending on market size—*i.e.,* markets 1–100 within three years, and the remaining markets within five years—on the later of these two dates: When the MSS operator certifies, prior to the BAS sunset date of December 9, 2013, that its satellite system is operational for purposes of meeting its operational milestone; or the date when the top 30 market rule is eliminated. The Commission believes that this is appropriate because once the satellite system is certified operational and the top 30 market rule has been eliminated, an MSS entrant will be in the position to make use of the spectrum. Furthermore, the criteria will be easy to apply because the MSS entrant must notify the Commission when it accomplishes its operational milestone and the elimination of the top 30 market rule will be effective thirty days after publication of the Report and Order and Order in the **Federal Register.** The Commission notes that the obligation to relocate the BAS incumbents within three and five years, depending on market size, is a joint obligation of all the MSS entrants and not just the entrant who has begun operations. Consequently, both MSS entrants will have an obligation to relocate the BAS incumbents in markets 1–100 within three years and the remaining markets within five years.

45. The Commission also proposes to specify that once the MSS entrants have incurred an obligation to relocate the BAS incumbents within the three and five year periods, the occurrence of the December 9, 2013 sunset date will not serve to terminate that obligation. The Commission views this approach as appropriate to ensure that all eligible BAS incumbents who are entitled to relocation are fairly compensated.

46. Finally, the Commission notes that our rules currently are silent on what consequences the MSS entrants face for not meeting the three and five year relocation deadlines. The Commission seeks comment on what consequences, if any, should be applied for failure to meet these deadlines.

D. BAS Relocation Process

47. The bimonthly status reports which Sprint Nextel has filed on the progress of the BAS transition show that BAS relocation activity slows between the time when replacement equipment is ordered for installation by individual licensees, and when all licensees in a market retune to the new channel plan. The reports have cited a number of different reasons for the delays in completing relocation, such as weather conditions, the availability and scheduling of installers, and so on. However, some market delays are due to a single BAS licensee in a market that has lagged in cooperating with the BAS transition and a handful of BAS licensees that have failed to execute frequency relocation agreements.

48. The Commission is concerned that some BAS licensees may not be making a good faith effort to complete the BAS transition in a timely manner. Because of the integrated nature of BAS, all BAS licensees in a market must transition as a group. Consequently, the failure of one BAS licensee to cooperate in the transition can delay many other BAS incumbents from completing the transition. Given that the BAS transition has taken far longer than anyone has expected, the Commission seeks comment on incentives it might apply to encourage all BAS incumbents to diligently work toward completing the BAS transition so as not to delay further the introduction of new services in the band.

49. Under our current rules, the BAS incumbents are primary until they are relocated, they refuse relocation, or the BAS relocation rules sunset on December 9, 2013. Because individual BAS licensees may delay the transition, the Commission seeks comment on the following proposal. If a BAS licensee has not completed relocation by February 9, 2010, the Commission could change its status for interference purposes, but continue to require that new entrants who incur a relocation and cost sharing obligation fulfill this obligation. Thus, Sprint Nextel, MSS and AWS–2 entrants would continue to have an obligation to relocate those BAS incumbents whose initial applications were filed prior to June 27, 2000 and who have primary status in the band.

50. The interference status between a nonrelocated BAS licensee and a new entrant, whether Sprint Nextel, MSS, or AWS–2, could be modified in one of several different ways. First, nonrelocated BAS incumbents could become secondary in the 1990–2025 MHz band and Sprint Nextel, MSS and AWS entrants primary as of February 9, 2010. This would allow Sprint Nextel, MSS and AWS–2 entrants to provide unimpeded commercial service. The nonrelocated BAS incumbent would be able to continue operations in the band if the new entrants are not ready to begin using the band or if the BAS incumbent can operate without causing harmful interference to the new entrants. Second, the Commission could require the nonrelocated BAS incumbent to cease operations in the 1990–2025 MHz band as of February 9, 2010. This proposal has similarities to the BAS relocation rules prior to 2004. Third, the Commission could make the nonrelocated BAS licensee and the new entrants co-primary in the 1990–2025 MHz band as of February 9, 2010. Because a later arriving co-primary licensee must protect the operations of an existing co-primary licensee, the new entrants, whether Sprint Nextel, MSS, or AWS–2, would have to avoid causing interference to the existing BAS systems and accept interference from the BAS licensee. The Commission seeks comment on these approaches, or possible alternative approaches.

51. If the Commission adopts either the first or second of the procedures described, it seeks comment on whether we should look favorably upon waiver request from individual nonrelocated BAS licensees to allow them to maintain their primary status and continue operations if enforcing the rule would cause hardship or otherwise not serve the public interest. The BAS licensee could, for example show that the BAS spectrum in its market is so heavily used that there is no other available channel or that circumstances beyond the incumbent's control have prevented the incumbent from completing the transition by the deadline.

Initial Regulatory Flexibility Analysis

1. 52. As required by the Regulatory Flexibility Act of 1980, as amended (RFA),[1] the Commission has prepared this present Initial Regulatory Flexibility Analysis (IRFA) of the possible significant economic impact on a substantial number of small entities by the policies and rules proposed in this Further Notice of Proposed Rule Making (Further NPRM). Written public comments are requested on this IRFA. Comments must be identified as responses to the IRFA and must be filed by the deadlines for comments provided in the Further NPRM. The Commission will send a copy of this Further NPRM, including this IRFA, to the Chief Counsel for Advocacy of the Small Business Administration (SBA).[2]

A. Need for, and Objectives of, the Proposed Rules

53. In this Further Notice of Proposed Rulemaking, the Commission seeks comment on tentative conclusions and proposals for modifying and clarifying the Commission's requirements for the new entrants to the 1990–2025 MHz band to share the cost of relocating the incumbent BAS licensees from that band. The BAS incumbents are being removed from the 1990–2025 MHz band to make way for Sprint Nextel, MSS entrants, and future AWS licensees. Sprint Nextel, who will occupy the 1990–1995 MHz spectrum, is required to relocate the BAS incumbents from the band by February 8, 2010. The MSS entrants (ICO and TerreStar), who will occupy the 2000–2020 MHz spectrum, are also obligated to relocate the BAS incumbents before they may begin operations. The AWS licenses for the 1995–2000 MHz and 2020–2025 MHz have not yet been issued.

54. The cost sharing requirements for the BAS relocation must be modified because circumstances surrounding the relocation have significantly changed since the requirements were adopted. When the current cost sharing requirements were adopted in 2004, Sprint Nextel was expected to have completed the BAS transition by September 7, 2007; one or both of the MSS entrants was expected to have entered the band and incurred a cost sharing obligation to Sprint; the reconfiguration of the 800 MHz band, which Sprint Nextel was also undertaking, would have been completed by June 26, 2008; and Sprint Nextel was expected to be able to receive credit for the BAS relocation costs not reimbursed by MSS and AWS licenses toward the value of spectrum it was receiving. None of these assumptions have in fact been correct. Furthermore, the current requirements have a number of ambiguities, such as not specifying a standard for determining how MSS and AWS licenses incur a cost sharing obligation to Sprint Nextel and not specifying when reimbursement of BAS relocation expenses is to occur.

55. The Further NPRM tentatively concludes that Sprint Nextel may not both receive reimbursement for cost sharing from other new entrants and receive credit for the same relocation costs against the value of the spectrum it is receiving. The MSS and AWS–2 entrants can incur a relocation obligation until the band relocation rules sunset on December 9, 2013. The Further NPRM tentatively concludes that an MSS entrant will incur an obligation to reimburse Sprint for BAS relocation costs when it certifies that its satellite is operational for purposes of meeting its operational milestone. As for AWS licensees, the Further NPRM proposes that AWS entrants will incur a cost sharing obligation upon grant of their long form application for their licenses, but also seeks comment on whether the AWS licensees should incur a cost sharing obligation when they activate a base station in an area that overlaps a DMA where the BAS incumbents have been relocated. The Further NPRM also seeks comment on whether once the AWS and MSS entrants incur a cost sharing obligation, they may not begin operations until they have reimbursed the party who relocated the BAS incumbents for their *pro rata* share of relocation costs for BAS markets that have transitioned when they incur the cost sharing obligation. As the BAS relocation continues and each additional BAS market is transitioned, the new entrant must pay their share of relocation costs within 30 days of being notified of the market transitioning. The Further NPRM also seeks comment on alternative proposals on when AWS and MSS entrants should be required to reimburse earlier entrants for their share of the BAS relocation costs.

56. In addition, the Further NPRM tentatively concludes that the MSS

[1] *See* 5 U.S.C. 603. The RFA, *see* 5 U.S.C. 601–612, has been amended by the Small Business Regulatory Enforcement Fairness Act of 1996 (SBREFA), Public Law 104–121, Title II, 110 Stat. 847 (1996).

[2] *See* 5 U.S.C. 603(a).

entrants' reimbursement obligation to Sprint Nextel should continue to be limited to a *pro rata* share of the costs of relocating BAS in the thirty largest markets (by population) and all fixed BAS links. The FNPRM seeks comment on whether this limitation on the MSS entrants' liability should be removed. Furthermore, the Further NPRM proposes to retain the MSS-to-MSS cost sharing, under which the MSS entrants are to ''true-up'' their cost after the BAS transition is complete to ensure that that each MSS entrant pays a *pro rata* share of the relocation cost depending on the amount to spectrum assigned. The Further NPRM also seeks comment on allowing Sprint Nextel to recover BAS relocation costs from one of the MSS entrants for BAS operations on 20 MHz of spectrum (the entire MSS allocation in the band), after which that MSS entrants could seek reimbursement from the other MSS entrant. The Further NPRM tentatively concludes that Sprint Nextel be required to share with other new entrants from whom it is seeking reimbursement, information about its relocation cost as documented in its annual external audit and as Sprint Nextel provides to the Transition Administrator of the 800 MHz transition. Furthermore, the Further NPRM proposes that if new entrants other than Sprint Nextel relocate BAS incumbents and seek reimbursement from other new entrants, the first entrant must provide the later entrants with documented relocation costs.

57. The current relocation rules require that the MSS entrants relocate BAS incumbents in markets 31–100 within three years of beginning operations and markets above 100 within five years of beginning operations. The Further NPRM proposes that the MSS entrants be required to relocate BAS incumbents in markets 1–30 within three years of beginning operations, as they are currently required to do for BAS incumbents in markets 31–100. For purposes of this rule, the FNPRM proposes that ''beginning operations'' be defined as the later of two dates: when an MSS operator certifies that its satellite is operational for purposes of meeting its operational milestone; or the date when the top 30 market rule is eliminated. The Further NPRM also proposes that the December 9, 2013 sunset date for the band not serve to terminate this obligation once it has been incurred. In addition, the Further NPRM seeks comment on what consequences, if any, should be applied for the failure of MSS entrants to meet these deadlines.

58. The Futher NPRM also seeks comment on incentives for all BAS incumbents to work diligently toward completing the BAS transition. The Further NPRM seeks comments on several approaches to changing the interference status of the BAS incumbents: Nonrelocated BAS could become secondary while Sprint Nextel, MSS, and AWS could become primary in the 1990–2025 MHz band on February 9, 2010; Nonrelocated BAS could be required to cease operation in the 1990–2025 MHz band on February 9, 2010; Nonrelocated BAS could become co-primary with Sprint Nextel, MSS, and AWS in the 1990–2025 MHz band on February 9, 2010. If any of these approaches are adopted, the Further NPRM seeks comment on whether we should look favorably upon waiver request from nonrelocated BAS licensees to allow them to maintain primary status and continue operations if enforcing the rule would cause hardship or otherwise not serve the public interest. Furthermore, the Further NPRM invites additional analysis of whether MSS entrants should be able to operate on an unrestricted and secondary basis in nonrelocated BAS markets instead of just when MSS entrants can successfully coordinate with nonrelocated BAS incumbents.

B. Legal Basis

59. The proposed action is taken pursuant to Sections 4(i), 5(c), 303(f), 332, 337 and 405 of the Communications Act of 1934, as amended, 47 U.S.C. 154(i), 155(c), 303(f), 332, 337 and 405.

C. Description and Estimate of the Number of Small Entities To Which the Proposed Rules Will Apply

60. The RFA directs agencies to provide a description of and, where feasible, an estimate of the number of small entities that may be affected by the proposed rules, if adopted.[3] The RFA generally defines the term ''small entity'' as having the same meaning as the terms ''small business,'' ''small organization,'' and ''small governmental jurisdiction.''[4] In addition, the term ''small business'' has the same meaning as the term ''small business concern'' under the Small Business Act.[5] A small business concern is one which: (1) Is independently owned and operated; (2) is not dominant in its field of operation; and (3) satisfies any additional criteria established by the SBA.[6]

61. The RFA directs agencies to provide a description of and, where feasible, an estimate of the number of small entities that may be affected by the proposed rules, if adopted.[7] The RFA generally defines the term ''small entity'' as having the same meaning as the terms ''small business,'' ''small organization,'' and ''small governmental jurisdiction.''[8] In addition, the term ''small business'' has the same meaning as the term ''small business concern'' under the Small Business Act.[9] A small business concern is one which: (1) Is independently owned and operated; (2) is not dominant in its field of operation; and (3) satisfies any additional criteria established by the SBA.[10]

62. The proposed rule modifications may affect the interest of BAS, LTTS, and CARS licensees (which we have been referring to throughout this document generically as ''BAS'') because these licensees are being relocated from the 1990–2025 MHz band by the new entrants. In addition, the rule modifications will affect the interest of the new entrants to the 1990–2025 MHz band: MSS, Sprint Nextel, and future AWS entrants to the band.

63. BAS. This service uses a variety of transmitters to relay broadcast programming to the public (through translator and booster stations) or within the program distribution chain (from a remote news gathering unit back to the stations). The BAS licensees in the 1990–2110 MHz band will ultimately be required to use only the 2020–2110 MHz portion of that band. It is unclear how many of the BAS licensees will be affected by our new rules.

64. The Commission has not developed a definition of small entities specific to BAS licensees. However, the U.S. Small Business Administration (SBA) has developed small business size

[3] 5 U.S.C. 603(b)(3).

[4] 5 U.S.C. 601(6).

[5] 5 U.S.C. 601(3) (incorporating by reference the definition of ''small business concern'' in 15 U.S.C. 632). Pursuant to the RFA, the statutory definition of a small business applies ''unless an agency, after consultation with the Office of Advocacy of the Small Business Administration and after opportunity for public comment, establishes one or more definitions of such term which are appropriate to the activities of the agency and publishes such definition(s) in the **Federal Register**.'' 5 U.S.C. 601(3).

[6] Small Business Act, 15 U.S.C. 632 (1996).

[7] 5 U.S.C. 603(b)(3).

[8] 5 U.S.C. 601(6).

[9] 5 U.S.C. 601(3) (incorporating by reference the definition of ''small business concern'' in 15 U.S.C. 632). Pursuant to the RFA, the statutory definition of a small business applies ''unless an agency, after consultation with the Office of Advocacy of the Small Business Administration and after opportunity for public comment, establishes one or more definitions of such term which are appropriate to the activities of the agency and publishes such definition(s) in the **Federal Register**.'' 5 U.S.C. 601(3).

[10] Small Business Act, 15 U.S.C. 632 (1996).

standards. For BAS, we use the size standard for Television Broadcasting.[11] The SBA has developed a size standard for firms in this category, which is all firms having revenues less than $14 million. The only data which we have available for this category are for when the SBA size standard was for firms having revenues of less than $13.5 million. According to Commission staff review of the BIA Publications, Inc. Master Access Television Analyzer Database (BIA) on March 30, 2007, about 986 of an estimated 1,374 commercial television stations [12] (or approximately 72 percent) have revenues of $13.5 million or less and thus qualify as small entities under the SBA definition. Thus, under this standard, the majority of firms can be considered small.

65. *CARS.* The CARS licensees in the 1990–2110 MHz band will ultimately be required to use only the 2020–2110 MHz portion of that band. CARS licenses are issued to the owners or operators of cable television systems, cable networks, licensees of the BRS/EBS band, and private cable operators or other multichannel video programming distributors.[13] It is unclear how many of these will be affected by our new rules.

66. *Cable Television Distribution Services.* Since 2007, these services have been defined within the broad economic census category of Wired Telecommunications Carriers; that category is defined as follows: ''This industry comprises establishments primarily engaged in operating and/or providing access to transmission facilities and infrastructure that they own and/or lease for the transmission of voice, data, text, sound, and video using wired telecommunications networks. Transmission facilities may be based on a single technology or a combination of technologies.'' [14] The SBA has developed a small business size standard for this category, which is: all such firms having 1,500 or fewer employees.[15] To gauge small business prevalence for these cable services we must, however, use current census data that are based on the previous category of Cable and Other Program Distribution and its associated size standard; that size standard was: all such firms having $13.5 million or less in annual receipts.[16] According to Census Bureau data for 2002, there were a total of 1,191 firms in this previous category that operated for the entire year.[17] Of this total, 1,087 firms had annual receipts of under $10 million, and 43 firms had receipts of $10 million or more but less than $25 million.[18] Thus, the majority of these firms can be considered small.

67. *Cable Companies and Systems.* The Commission has also developed its own small business size standards, for the purpose of cable rate regulation. Under the Commission's rules, a ''small cable company'' is one serving 400,000 or fewer subscribers, nationwide.[19] Industry data indicate that, of 1,076 cable operators nationwide, all but eleven are small under this size standard.[20] In addition, under the Commission's rules, a ''small system'' is a cable system serving 15,000 or fewer subscribers.[21] Industry data indicate that, of 7,208 systems nationwide, 6,139 systems have under 10,000 subscribers, and an additional 379 systems have 10,000–19,999 subscribers.[22] Thus, under this second size standard, most cable systems are small.

68. *Cable System Operators.* The Communications Act of 1934, as amended, also contains a size standard for small cable system operators, which is ''a cable operator that, directly or through an affiliate, serves in the aggregate fewer than 1 percent of all subscribers in the United States and is not affiliated with any entity or entities whose gross annual revenues in the aggregate exceed $250,000,000.'' [23] The Commission has determined that an operator serving fewer than 677,000 subscribers shall be deemed a small operator, if its annual revenues, when combined with the total annual revenues of all its affiliates, do not exceed $250 million in the aggregate.[24] Industry data indicate that, of 1,076 cable operators nationwide, all but ten are small under this size standard.[25] We note that the Commission neither requests nor collects information on whether cable system operators are affiliated with entities whose gross annual revenues exceed $250 million,[26] and therefore we are unable to estimate more accurately the number of cable system operators that would qualify as small under this size standard.

69. *Wireless Telecommunications Carriers (except satellite).* Wireless Telecommunications Carriers (except satellite) is an SBA standard which has a size standard of fewer than 1500 employees.[27] Wireless cable systems use 2 GHz band frequencies of the Broadband Radio Service (''BRS''), formerly Multipoint Distribution Service (''MDS''), and the Educational Broadband Service (''EBS''), formerly Instructional Television Fixed Service (''ITFS''), to transmit video programming and provide broadband services to residential subscribers. These services were originally designed for the delivery of multichannel video programming, similar to that of traditional cable systems, but over the past several years licensees have focused their operations instead on providing two-way high-speed Internet access services. We estimate that the number of wireless cable subscribers is approximately 100,000, as of March 2005. As noted, within the category of Wireless Telecommunications Carriers, except satellite, such firms with fewer than 1500 employees are considered to be small.[28] The data presented were acquired when the applicable SBA small business size standard was called Cable and Other Program Distribution,

[11] 13 CFR 121.201, NAICS code 515120.

[12] Although we are using BIA's estimate for purposes of this revenue comparison, the Commission has estimated the number of licensed commercial television stations to be 1374. *See* News Release, ''Broadcast Station Totals as of December 31, 2006'' (dated Jan. 26, 2007); *see http://www.fcc.gov/mb/audio/totals/bt061231.html.*

[13] 47 CFR 78.13.

[14] U.S. Census Bureau, 2007 NAICS Definitions, ''517110 Wired Telecommunications Carriers'' (partial definition); *http://www.census.gov/naics/2007/def/ND517110.HTM#N517110.*

[15] 13 CFR 121.201, NAICS code 517110.

[16] 13 CFR 121.201, NAICS code 517110.

[17] U.S. Census Bureau, 2002 Economic Census, Subject Series: Information, Table 4, Receipts Size of Firms for the United States: 2002, NAICS code 517510 (issued November 2005).

[18] *Id.* An additional 61 firms had annual receipts of $25 million or more.

[19] 47 CFR 76.901(e). The Commission determined that this size standard equates approximately to a size standard of $100 million or less in annual revenues. Implementation of Sections of the 1992 Cable Act: Rate Regulation, *Sixth Report and Order and Eleventh Order on Reconsideration,* 10 FCC Rcd 7393, 7408 (1995).

[20] These data are derived from: R.R. Bowker, *Broadcasting & Cable Yearbook 2006,* ''Top 25 Cable/Satellite Operators,'' pages A–8 & C–2 (data current as of June 30, 2005); Warren Communications News, *Television & Cable Factbook 2006,* ''Ownership of Cable Systems in the United States,'' pages D–1805 to D–1857.

[21] 47 CFR 76.901(c).

[22] Warren Communications News, *Television & Cable Factbook 2006,* ''U.S. Cable Systems by Subscriber Size,'' page F–2 (data current as of Oct. 2005). The data do not include 718 systems for which classifying data were not available.

[23] 47 U.S.C. 543(m)(2); *see* 47 CFR 76.901(f) & nn. 1–3.

[24] 47 CFR 76.901(f); *see* Public NPRM, *FCC Announces New Subscriber Count for the Definition of Small Cable Operator,* DA 01–158 (Cable Services Bureau, Jan. 24, 2001).

[25] These data are derived from: R.R. Bowker, *Broadcasting & Cable Yearbook 2006,* ''Top 25 Cable/Satellite Operators,'' pages A–8 & C–2 (data current as of June 30, 2005); Warren Communications News, *Television & Cable Factbook 2006,* ''Ownership of Cable Systems in the United States,'' pages D–1805 to D–1857.

[26] The Commission does receive such information on a case-by-case basis if a cable operator appeals a local franchise authority's finding that the operator does not qualify as a small cable operator pursuant to 76.901(f) of the Commission's rules. *See* 47 CFR 76.909(b).

[27] 13 CFR 121.201, NAICS Code 517210. Standard for small business is 1500 employees or fewer.

[28] 13 CFR 121.201, NAICS Code 517210.

and which referred to all such firms having $13.5 million or less in annual receipts.[29] According to Census Bureau data for 2002, there were a total of 1,191 firms in this category that operated for the entire year.[30] Of this total, 1,087 firms had annual receipts of under $10 million, and 43 firms had receipts of $10 million or more but less than $25 million.[31] The SBA small business size standard for the broad census category of Wireless Telecommunications Carriers, which consists of such entities with fewer than 1,500 employees, appears applicable to MDS and ITFS.

70. The Commission has defined small MDS (now BRS) entities in the context of Commission license auctions. In the 1996 MDS auction, the Commission defined a small business as an entity that had annual average gross revenues of less than $40 million in the previous three calendar years. This definition of a small entity in the context of MDS auctions has been approved by the SBA. In the MDS auction, 67 bidders won 493 licenses. Of the 67 auction winners, 61 claimed status as a small business. At this time, the Commission estimates that of the 61 small business MDS auction winners, 48 remain small business licensees. In addition to the 48 small businesses that hold BTA authorizations, there are approximately 392 incumbent MDS licensees that have gross revenues that are not more than $40 million and are thus considered small entities. MDS licensees and wireless cable operators that did not receive their licenses as a result of the MDS auction fall under the SBA small business size standard for Wireless Telecommunications Carriers (except satellite).[32] As noted, within the category of Wireless Telecommunications Carriers, such firms with fewer than 1500 employees are considered to be small.[33] The data presented were acquired when the applicable SBA small business size standard was called Cable and Other Program Distribution, and which referred to all such firms having $13.5 million or less in annual receipts.[34] According to Census Bureau data for 2002, there were a total of 1,191 firms in this category that operated for the entire year.[35] Of this total, 1,087 firms had annual receipts of under $10 million, and 43 firms had receipts of $10 million or more but less than $25 million.[36] Information available to us indicates that there are approximately 850 of these licensees and operators that do not generate revenue in excess of $13.5 million annually. Therefore, we estimate that there are approximately 850 small entity MDS (or BRS) providers, as defined by the SBA and the Commission's auction rules.

71. Educational institutions are included in this analysis as small entities; however, the Commission has not created a specific small business size standard for ITFS (now EBS). We estimate that there are currently 2,032 ITFS (or EBS) licensees, and all but 100 of the licenses are held by educational institutions. Thus, we estimate that at least 1,932 ITFS licensees are small entities.

72. *LTTS.* The Local Television Transmission Service (LTTS) in the 1990–2110 MHz band is used by communications common carriers to provide service to television broadcast stations, television broadcast networks, cable system operations, and cable network entities.[37] There are 45 LTTS licensees in the 1990–2110 MHz band, and these licensees will ultimately be required to use only the 2025–2110 MHz portion of that band. It is unclear how many of these will be affected by our new rules. The Commission has not yet defined a small business with respect to local television transmission services. For purposes of this IRFA, we will use the SBA's definition applicable to Wireless Telecommunications Carriers (except satellite). As noted, within the category of Wireless Telecommunications Carriers, except satellite, such firms with fewer than 1500 employees are considered to be small.[38] The data presented were acquired when the applicable SBA small business size standard was called Cellular and Other Wireless Telecommunications—which referred to all such firms having no more than 1,500 persons. According to Census Bureau data for 1997, there were 977 firms in this category, total, that operated for the entire year.[39] Of this total, 965 firms had employment of 999 or fewer employees, and an additional 12 firms had employment of 1,000 employees or more.[40] Thus, under this size standard, the majority of firms can be considered small.

73. *MSS.* There are two MSS operators in the 1990–2110 MHz band. These operators will provide services using the 2000–2020 MHz portion of the band. The SBA has developed a small business size for Satellite Telecommunications, which consist of all companies having annual revenues of less than $15 million.[41] Neither of the two MSS operators currently has revenues because one has not launched a satellite yet and the other is unable to provide service with its satellite because of the delays in the BAS transition. However, given that as of December 31, 2008, these MSS operators had assets of $1.341 billion and $664 million, respectively, we expect that both of these companies will have annual revenue of over $15 million once they are able to offer commercial services.[42] Consequently, we find that neither MSS operator is a small business. Small businesses often do not have the financial ability to become MSS system operators due to high implementation costs associated with launching and operating satellite systems and services.

74. *AWS.* The AWS licensees have not been issued and the Commission has no definite plans to issue these licensees. Presumably some of the businesses which will eventually obtain AWS licensees will be small businesses. However, we have no means to estimate how many of these licensees will be small businesses.

75. *Sprint Nextel.* Sprint Nextel as a new entrant to the band will occupy spectrum from 1990–1995 MHz. The Report and Order and Order grants Sprint Nextel a waiver of the deadline by which it must relocate the BAS, CARS, and LTTS incumbents from the 1990–2025 MHz portion of the band. Sprint Nextel belongs to the SBA category Wireless Telecommunications Carriers (except satellite).[43] Businesses in this category are considered small if

[29] 13 CFR 121.201, NAICS Code 517110.

[30] U.S. Census Bureau, 2002 Economic Census, Subject Series: Information, Table 4, Receipts Size of Firms for the United States: 2002, NAICS code 517510 (issued November 2005).

[31] *Id.* An additional 61 firms had annual receipts of $25 million or more.

[32] 13 CFR 121.201, NAICS Code 517210.

[33] 13 CFR 121.201, NAICS Code 517210.

[34] 13 CFR 121.201, NAICS Code 517110.

[35] U.S. Census Bureau, 2002 Economic Census, Subject Series: Information, Table 4, Receipts Size of Firms for the United States: 2002, NAICS code 517510 (issued November 2005).

[36] *Id.* An additional 61 firms had annual receipts of $25 million or more.

[37] 47 CFR 101.803(b).

[38] 13 CFR 121.201, NAICS Code 517210.

[39] U.S. Census Bureau, 1997 Economic Census, Subject Series: Information, ''Employment Size of Firms Subject to Federal Income Tax: 1997,'' Table 5, NAICS code 517212 (issued Oct. 2000).

[40] *Id.* The census data do not provide a more precise estimate of the number of firms that have employment of 1,500 or fewer employees; the largest category provided is ''Firms with 1,000 employees or more.''

[41] 13 CFR 121.201, NAICS Code 517410.

[42] TerreStar Corp., SEC Form 10–K 2008 Annual Report, filed March 12, 2009 at F2; ICO Global Communications (Holdings) Limited, SEC Form 10–K 2008 Annual Report, filed March 31, 2009 at 52. ICO's subsidiary which controls its satellite covering the United States has recently filed for bankruptcy. ICO Global Communications (Holdings) Limited, Form 8–K, filed May 15, 2009.

[43] 13 CFR 121.201, NAICS Code 517210.

they have fewer than 1500 employees.[44] As of December 31, 2008 Sprint Nextel had about 56,000 employees.[45] Consequently, we find that Sprint Nextel is not a small business.

D. Description of Projected Reporting, Recordkeeping, and Other Compliance Requirements for Small Entities

76. The FNPRM proposes that if a new entrant other than Sprint Nextel relocates BAS, CARS, or LTTS incumbents and seeks cost sharing from a new entrant who enters the band later, then the first new entrant must provide the later new entrant with documentation of the relocation costs. The new entrants to whom this requirement applies may be an MSS operator or a future AWS licensee. Some of the future AWS licensees may be small entities.

E. Steps Taken To Minimize the Significant Economic Impact on Small Entities, and Significant Alternatives Considered

77. Our primary concern in this FNPRM, which we release at the same time we release the Report and Order and Order, continues to be balancing the needs of incumbent BAS, CARS, and LTTS licensees to provide service without suffering harmful interference and the introduction of new MSS in a timely manner. The interest of the BAS, CARS, and LTTS licensees would be affected if one of the approaches for modifying the interference status of the nonrelocated BAS, CARS, and LTTS incumbents on February 9, 2010 is adopted: such as making the nonrelocated BAS, CARS, and LTTS incumbents secondary; requiring them to discontinue operations; or making them co-primary with the new entrants. The potential harm to BAS, CARS, and LTTS will depend on the particular changes made to the rules and the progress of Sprint Nextel in relocating the BAS, CARS, and LTTS incumbents. If Sprint Nextel is able to relocate all of the BAS, CARS, and LTTS incumbents by the February 8, 2010, then no BAS, CARS, and LTTS licensees will be harmed by the proposed changes. However, if not all of the BAS, CARS, and LTTS incumbents are relocated by February 8, 2010, the changes to the remaining incumbents' interference status on February 9, 2010 may cause significant economic harm to these incumbents.

78. The degree of harm suffered by nonrelocated BAS, CARS, and LTTS incumbents will depend on many factors. If the BAS, CARS, and LTTS incumbents' interference status is changed to co-primary, they would suffer no economic harm because, as the first primary licensees to enter the band, they would enjoy interference protection from the new entrants and would not have to avoid interfering with new entrants. If the nonrelocated BAS, CARS, and LTTS incumbents' status is changed to secondary, the BAS, CARS, and LTTS incumbents would still be able to operate their equipment as long as they do not cause interference to the primary users of the band. If the nonrelocated BAS, CARS, and LTTS incumbents are required to discontinue operations, they will suffer economic harm. BAS is used primarily for electronic newsgathering and fixed television relay links. If the BAS incumbents are not able to use their BAS equipment, the quality of their newscast may be affected and they would have to find alternate means of replacing the relay links. If CARS licensees are not able to use their equipment, they may have difficulty in delivering their cable television programming.

79. The possible change in the incumbents' interference status as of February 9, 2010 will affect any BAS, CARS, or LTTS incumbents who have not been relocated from the 1990–2025 MHz band by that date. This status change will affect all incumbent licensees equally. Consequently, we do not believe that the proposed rule changes will have a disparate impact on small entities.

80. Because of the integrated nature of BAS, CARS, and LTTS, all licensees in a market must transition to the new band plan at the same time. As a result, a single licensee who lags behind its peers in completing the transition could cause inconvenience and hardship to the new entrants as well as the other incumbent licensees in the market. Consequently, in the FNPRM the Commission seeks comment on changing the interference status of nonrelocated BAS, CARS, and LTTS incumbents despite the potential of these incumbents experiencing interference or having to discontinue use of part of their licensed spectrum.

81. Nonetheless, however, we note that the number of BAS, CARS, and LTTS incumbents that will be affected by the change in interference status should be small because Sprint Nextel is required to complete the BAS transition by February 8, 2010. To minimize the potential hardship to BAS, CARS, and LTTS incumbents, we seek comment on whether we should look favorably on requests from individual incumbents for waiver of the change of the interference status in the event that it would cause hardship or not be in the public interest. In addition, the possible change in the interference status of the BAS, CARS, and LTTS incumbents would not change the obligation of the new entrants to relocate the remaining incumbents until the band sunset date of December 9, 2013.

82. Most of the proposals in the FNPRM address the cost sharing obligations between the MSS entrants, AWS entrants, and Sprint Nextel. However, the interest of BAS, CARS, and LTTS licensees would be positively affected by making it more likely that these licensees in the thirty largest markets will be relocated to the new channel plan. The FNPRM proposes adding the requirement that MSS entrants relocate BAS, CARS, and LTTS in markets 1–30 within three years of beginning operations. Because BAS, CARS, and LTTS that are not relocated by the band sunset date of December 9, 2013 become secondary, increasing the likelihood that BAS, CARS, and LTTS will be relocated by MSS is a potential benefit for the incumbents—especially since the MSS entrants will be required to provide the relocated incumbents with comparable facilities. Note that because Sprint Nextel has an obligation to relocate the BAS, CARS, and LTTS incumbents by February 8, 2010, the MSS entrants may not have to relocate the incumbents.

83. The proposals made in the FNPRM may affect the interest of future AWS licensees in the band, some of whom may be small businesses. However, because these licenses have not been issued, we have no means to determine whether the proposals will have a disparate impact on these potentially small businesses. We also have no means to determine what steps would minimize the impact on any of these potentially small businesses.

F. Federal Rules That May Duplicate, Overlap or Conflict With the Proposed Rules

84. None.

Ordering Clauses

85. Pursuant to Sections 4(i), 5(c), 303(f), 332, 337 and 405 of the Communications Act of 1934, as amended, 47 U.S.C. 154(i), 155(c), 303(f), 332, 337 and 405, this Further NPRM of Proposed Rulemaking *is adopted*.

86. The Commission's Consumer and Governmental Affairs Bureau, Reference Information Center, *shall send* a copy of this *Report and Order and Order and*

[44] *Id.*

[45] Sprint Nextel Corp., SEC Form 10–K 2008 Annual Report, filed Feb. 27, 2009 at 14.

Further NPRM of Proposed Rulemaking, including the Initial Regulatory Flexibility Analysis, to the Chief Counsel for Advocacy of the Small Business Administration.

Federal Communications Commission.

Marlene H. Dortch,

Secretary.

[FR Doc. E9–14757 Filed 6–22–09; 8:45 am]

BILLING CODE 6712–01–P

ENVIRONMENTAL PROTECTION AGENCY

48 CFR Parts 1545 and 1552

[EPA–HQ–OARM–2008–0817; FRL–8906–4]

EPAAR Prescription and Clauses—Government Property—Contract Property Administration

AGENCY: Environmental Protection Agency (EPA).

ACTION: Proposed rule.

SUMMARY: The Environmental Protection Agency (EPA) amends the EPA Acquisition Regulation (EPAAR) to update policy, procedures, and contract clauses. The proposed rule consolidates the EPAAR physical property clauses (Decontamination, Fabrication, and Government Property), re-designates the prescription number in the data clause, and updates the roles and responsibilities of the contractor, DCMA and CPC.

DATES: Comments must be received on or before July 23, 2009.

ADDRESSES: Submit your comments, identified by Docket ID No. EPA–HQ–OARM–2008–0817, by one of the following methods:

- *http://www.regulations.gov:* Follow the on-line instructions for submitting comments.
- *E-mail:* docket.oei@epa.gov.
- *Fax:* (202) 566–1753.
- *Mail:* EPA–HQ–OARM–2008–0817, OEI Docket, Environmental Protection Agency, 2822T, 1200 Pennsylvania Ave., NW., Washington, DC 20460. Please include a total of three (3) copies.
- *Hand Delivery:* EPA Docket Center-Attention OEI Docket, EPA West, Room B102, 1301 Constitution Ave., NW., Washington, DC 20004. Such deliveries are only accepted during the Docket's normal hours of operation, and special arrangements should be made for deliveries of boxed information.

Instructions: Direct your comments to Docket ID No. EPA–HQ–OARM–2008–0817. EPA's policy is that all comments received will be included in the public docket without change, and may be made available online at *http://www.regulations.gov,* including any personal information provided, unless the comment includes information claimed to be Confidential Business Information (CBI) or other information whose disclosure is restricted by statute. Do not submit information that you consider to be CBI or otherwise protected through *http://www.regulations.gov* or e-mail. The *http://www.regulations.gov* Web site is an ''anonymous access'' system, which means EPA will not know your identity or contact information unless you provide it in the body of your comment. If you send an e-mail comment directly to EPA without going through *www.regulations.gov*, your e-mail address will be automatically captured and included as part of the comment that is placed in the public docket, and made available on the Internet. If you submit an electronic comment, EPA recommends that you include your name and other contact information in the body of your comment, and with any disk or CD–ROM you submit. If EPA cannot read your comment due to technical difficulties, and cannot contact you for clarification, EPA may not be able to consider your comment. Electronic files should avoid the use of special characters, any form of encryption, and be free of any defects or viruses. For additional information about EPA's public docket, visit the EPA Docket Center homepage at *http://www.epa.gov/epahome/dockets.htm.*

Docket: All documents in the docket are listed in the *http://www.regulations.gov* index. Although listed in the index, some information is not publicly available, *e.g.,* CBI or other information whose disclosure is restricted by statute. Certain other material, such as copyrighted material, will be publicly available only in hard copy. Publicly available docket materials are available either electronically in *http://www.regulations.gov,* or in hard copy at the Government Property-Contract Property Administration Docket, EPA/DC, EPA West, Room 3334, 1301 Constitution Ave., NW., Washington, DC. The Public Reading Room is open from 8:30 a.m. to 4:30 p.m., Monday through Friday, excluding legal holidays. The telephone number for the Public Reading Room is (202) 566–1744, and the telephone number for the EPA Docket Center is (202) 566–1752. This Docket Facility is open from 8:30 a.m. to 4:30 p.m. Monday through Friday, excluding legal holidays.

FOR FURTHER INFORMATION CONTACT: Iris Redmon, Policy, Training and Oversight Division, Acquisition, Policy and Training Service Center (3802R), Environmental Protection Agency, 1200 Pennsylvania Ave., NW., Washington, DC 20460; *telephone number:* 202–564–2644; *fax number:* 202–565–2475; *e-mail address: redmon.iris@epa.gov.*

SUPPLEMENTARY INFORMATION:

I. General Information

1. *Submitting CBI.* Do not submit this information to EPA through *http://www.regulations.gov* or e-mail. Clearly mark the part or all of the information that you claim to be CBI. For CBI information in a disk or CD–ROM that you mail to EPA, mark the outside of the disk or CD–ROM as CBI, and then identify electronically within the disk or CD–ROM the specific information that is claimed as CBI. In addition to one complete version of the comment that includes information claimed as CBI, a copy of the comment that does not contain the information claimed as CBI must be submitted for inclusion in the public docket.

Information so marked will not be disclosed except in accordance with procedures set forth in 40 CFR Part 2.

2. *Tips for Preparing Your Comments.* When submitting comments, remember to:

- Identify the rulemaking by docket number and other identifying information (subject heading, **Federal Register** date and page number).
- Follow directions—The agency may ask you to respond to specific questions or organize comments by referencing a Code of Federal Regulations (CFR) part or section number.
- Explain why you agree or disagree, suggest alternatives, and substitute language for your requested changes.
- Describe any assumptions and provide any technical information and/or data that you used.
- If you estimate potential costs or burdens, explain how you arrived at your estimate in sufficient detail to allow for it to be reproduced.
- Provide specific examples to illustrate your concerns, and suggest alternatives.
- Explain your views as clearly as possible, avoiding the use of profanity or personal threats.
- Make sure to submit your comments by the comment period deadline identified.

II. Background

The Federal Acquisition Regulation (FAR) on Government Property was revised June 14, 2007. This revision removed the previous restriction on providing government property for contract performance, and gave

contracting officers more flexibility in their determination to provide property. Accordingly, in order to assist EPA contracting officers involved in providing Government Property and contract property administration, it is necessary to amend the EPAAR to incorporate guidance on their use.

The administrative amendments are necessary for two reasons: First, align Agency Government Property policy and procedures with the Federal Acquisition Regulation Part 45, Government Property revision; and second, encourage contractors to use commercial standards for managing and recording property.

III. Proposed Rule

This proposed rule would make the following administrative changes to the government property clause prescription and clauses: (1) Re-designate the EPAAR prescription number 1545.106 as 1545.107 and change the prescription reference in 1552.245–71 Government Furnished Data; (2) consolidate the information in 1552.245–73 Government Property (GP) and 1552.245–72–Fabrication or Acquisition of Nonexpendable Property with 1552.245–70 Decontamination; (3) change the name of 1552.245–70 from Decontamination to Government Property; and (4) remove 1545.106 prescription, 1552.245–73 Government Property, and 1552.245–72 Fabrication or Acquisition of Nonexpendable Property.

IV. Statutory and Executive Order Reviews

A. Executive Order 12866: Regulatory Planning and Review

This proposed rule is not a significant regulatory action for the purposes of Executive Order 12866; therefore, no review is required by the Office of Information and Regulatory Affairs within the Office of Management and Budget (OMB).

B. Paperwork Reduction Act

The Paperwork Reduction Act does not apply because this rule does not contain information requirements that require the approval of OMB under the Paperwork Reduction Act of 1980 (44 U.S.C. 3501 *et seq.*).

C. Regulatory Flexibility Act (RFA), as Amended by the Small Business Regulatory Enforcement Fairness Act of 1996 (SBREFA), 5 U.S.C. 601 et seq.

The RFA generally requires an agency to prepare a regulatory flexibility analysis of any rule subject to notice and comment rulemaking requirements under the Administrative Procedure Act or any other statute, unless the agency certifies that the rule will not have a significant economic impact on a substantial number of small entities. Small entities include small businesses, small organizations, and small governmental jurisdictions.

For purposes of assessing the impact of today's proposed rule on small entities, ''small entity'' is defined as: (1) A small business that meets the definition of a small business found in the Small Business Act and codified at 13 CFR 121.201; (2) a small governmental jurisdiction that is a government of a city, county, town, school district or special district with a population of less than 50,000; or (3) a small organization that is any not-for-profit enterprise which is independently owned and operated, and is not dominant in its field.

After considering the economic impacts of today's proposed rule on small entities, I certify that this action will not have a significant economic impact on a substantial number of small entities. In determining whether a rule has a significant economic impact on a substantial number of small entities, the impact of concern is any significant adverse economic impact on small entities, because the primary purpose of the regulatory flexibility analyses is to identify and address regulatory alternatives ''which minimize any significant economic impact of the proposed rule on small entities'' 5 U.S.C. 603 and 604. Thus, an agency may certify that a rule will not have a significant economic impact on a substantial number of small entities if the rule relieves regulatory burden, or otherwise has a positive economic effect on all of the small entities subject to the rule. Since providing government property will be available equally to large and small entities, this rule will not have a significant economic impact on small entities.

D. Unfunded Mandates Reform Act

Title II of the Unfunded Mandates Reform Act of 1995 (UMRA), Public Law 104–4, establishes requirements for Federal agencies to assess their regulatory actions on State, local, and Tribal governments, and the private sector. This proposed rule does not contain a Federal mandate that may result in expenditures of $100 million or more for State, local, and Tribal governments, in the aggregate, or the private sector in one year. Any private sector costs for this action relate to paperwork requirements and associated expenditures that are far below the level established for UMRA applicability. Thus, this proposed rule is not subject to the requirements of sections 202 and 205 of the UMRA.

E. Executive Order 13132: Federalism

Executive Order 13132, entitled, ''Federalism'' (64 FR 43255, August 10, 1999), requires EPA to develop an accountable process to ensure ''meaningful and timely input by State and local officials in the development of regulatory policies that have federalism implications.'' ''Policies that have federalism implications'' are defined in the Executive Order to include regulations that have ''substantial direct effects on the States, on the relationship between the national Government and the States, or on the distribution of power and responsibilities among the various levels of government.''

Under section 6 of Executive Order 13132, EPA may not issue a regulation that has federalism implications, that imposes substantial direct compliance costs, and that is not required by statute, unless the Federal Government provides the funds necessary to pay the direct compliance costs incurred by State and local governments, or EPA consults with State and local officials early in the process of developing the proposed regulation. EPA also may not issue a regulation that has federalism implications, and preempts State law, unless the Agency consults with State and local officials early in the process of developing the proposed regulation.

This proposed rule does not have federalism implications. It will not have substantial direct effects on the States, on the relationship between the national government and the States, or on the distribution of power and responsibilities among the various levels of government, as specified in Executive Order 13132. This proposed rule would amend the EPAAR to provide guidance on providing government property and make other administrative changes. Thus, the requirements of section 6 of the Executive Order do not apply to this proposed rule.

F. Executive Order 13175: Consultation and Coordination With Indian Tribal Governments

Executive Order 13175, entitled ''Consultation and Coordination with Indian Tribal Governments'' (65 FR 67249, November 6, 2000), requires EPA to develop an accountable process to ensure ''meaningful and timely input by Tribal officials in the development of regulatory policies that have Tribal implications.'' ''Policies that have Tribal implications'' are defined in the Executive Order to include regulations that have ''substantial direct effects on

one or more Indian Tribes, on the relationship between the Federal Government and the Indian Tribes, or on the distribution of power and responsibilities between the Federal Government and Indian Tribes.''

This proposed rule does not have Tribal implications. It will not have substantial direct effects on Tribal governments, on the relationship between the Federal Government and Indian Tribes, or on the distribution of power and responsibilities between the Federal Government and Indian Tribes, as specified in Executive Order 13175. Thus, Executive Order 13175 does not apply to this proposed rule.

In the spirit of Executive Order 13175, and consistent with EPA policy to promote communication between EPA and Tribal governments, EPA specifically solicits additional comment on this proposed rule from Tribal officials.

G. Executive Order 13045

Executive Order 13045, ''Protection of Children from Environmental Health Risks and Safety Risks'' (62 FR 19885, April 23,1997) applies to any rule that: (1) Is determined to be ''economically significant'' as defined under Executive Order 12866; and (2) concerns an environmental health or safety risk that EPA has reason to believe may have a disproportionate effect on children. If the regulatory action meets both criteria the Agency must evaluate the environmental health or safety effects of the planned rule on children, and explain why the planned regulation is preferable to other potentially effective and reasonably feasible alternatives considered by the Agency.

This action is not subject to Executive Order 13045 (62 FR 19885, April 23, 1997), because it is not economically significant as defined in Executive Order 12866, and it does not involve decisions on environmental health or safety risk.

H. National Technology Transfer and Advancement Act of 1995

Section 12(d) of the National Technology Transfer and Advancement Act of 1995 (NTTAA), Public Law 104–113, section 12(d) (15 U.S.C. 272 note), directs EPA to use voluntary consensus standards in its regulatory activities, unless to do so would be inconsistent with applicable law, or otherwise impractical. Voluntary consensus standards are technical standards (*e.g.,* materials specifications, test methods, sampling procedures and business practices) that are developed or adopted by voluntary consensus standards bodies. The NTTAA directs EPA to provide Congress, through OMB, explanations when the Agency decides not to use available and applicable voluntary consensus standards.

This proposed rule will use the voluntary standards and or/industry leading practices and standards for Government property management except where inconsistent with law or regulation, as stated in FAR 52.245–1(b).

I. Executive Order 13211: Actions Concerning Regulations That Significantly Affect Energy Supply, Distribution or Use

This proposed rule is not subject to Executive Order 13211, ''Actions Concerning Regulations That Significantly Affect Energy Supply, Distribution or Use'' (66 FR 28335 (May 22, 2001)), because it is not a significant regulatory action under Executive Order 12866.

List of Subjects in 48 CFR Parts 1545 and 1552

Environmental protection, Government procurement.

Dated: May 6, 2009.

John C. Gherardini III,

Acting Director, Office of Acquisition Management.

Therefore, 48 CFR Chapter 15 is proposed to be amended as set forth below:

PART 1545—GOVERNMENT PROPERTY

1. The authority citation for part 1545 continues to read as follows:

Authority: Sec. 205(c), 63 Stat. 390, as amended, 40 U.S.C. 486(c).

Subpart 1545.1—General

2. Redesignate section 1545.106 as section 1545.107, and revise the newly redesignated section to read as follows.

§ 1545.107 Government property clauses.

(a) The Contracting Officer shall insert the contract clause at 1552.245–70:

(1) When it is anticipated that a Contractor will use Government-furnished or Contractor-acquired property in the cleanup of hazardous material as defined in Federal Standard No. 313, or, the toxic chemicals listed 40 CFR 372.65, in the environment.

(2) In all cost-type solicitations and contracts regardless of whether Government property is initially provided, and in all fixed-price solicitations and contracts whenever Government-furnished property is provided.

(b) The Contracting Officer shall insert the contract clause at 1552.245–71, Government-Furnished Data, in any contract in which the Government is to furnish data to the Contractor. The data to be provided shall be identified in the clause.

PART 1552—SOLICITATION PROVISIONS AND CONTRACT CLAUSES

4. The authority citation for part 1552 continues to read as follows:

Authority: 5 U.S.C. 301; Sec. 205(c), 63 Stat. 390, as amended, 40 U.S.C. 486(c); and 41 U.S.C. 418b.

Subpart 1552.2—Texts of Provisions and Clauses

5. Revise section 1552.245–70 to read as follows:

§ 1552.245–70 Government property.

As prescribed in 1545.107(a), insert a clause substantially the same as follows:

Government Property

(a) The contractor shall not fabricate or acquire, on behalf of the Government, either directly or indirectly through a subcontract, any item of property without prior written approval from the Contracting Officer. If the Contracting Officer authorizes the contractor to acquire and/or fabricate equipment for use in the performance of this contract, the equipment shall be subject to the provisions of the ''Government Property'' clause and listed on the contract via contract modification.

(b) If the Government provides item(s) of Government property to the contractor for use in the performance of this contract, this property shall be used and maintained by the contractor in accordance with the provisions of the ''Government Property'' clause.

The ''EPA Contract Property Administration Requirements'' provided below apply to this contract.

U.S. Environmental Protection Agency

Contract Property Administration Requirements (CPAR)

1. *Purpose.* This document sets forth the requirements for the U.S. Environmental Protection Agency (EPA) contractors performing Government property management responsibilities under EPA contracts. These requirements supplement those contained in the Government Property clause(s) and Part 45 Government Property of the Federal Acquisition Regulation (FAR).

2. *Contract Property Administration (CPAR).*

a. *EPA Delegation.* EPA delegates all contract property administration to the EPA Contract Property Coordinator

(CPC). The delegations apply to all EPA contracts issued with or that have the potential to receive, purchase or acquire Government Property or include the Government Property clauses. In addition to administering all contract property, the CPC provides technical expertise and assistance to the Contracting Officer (CO) and Contracting Officer Technical Representative (COTR) relative to Government Property.

b. *DCMA Re-delegation.* The CPC may re-delegate contract property management oversight to the Defense Contract Management Agency (DCMA) for property administration and plant clearance. Upon acceptance of the delegation, DCMA will provide notification to the contractor identifying the assigned property administrator (PA) and plant clearance officer (PLCO). The DCMA PA is available to the contractor for assistance in all matters of property administration.

Notwithstanding the delegation, as necessary, the contractor may contact the EPA CO. In the event of a disagreement between the contractor and the DCMA PA, the contractor should seek resolution from the CO. Unless otherwise directed in the contract, or this document, all originals of written information or reports, except direct correspondence between the contractor and the DCMA PA, relative to Government property, should be forwarded to the administrative CO assigned to this contract and the CPC.

c. *Disagreements.* Notwithstanding the delegation (s), as necessary, the contractor may contact the CO. In the event of a disagreement between the contractor and the PA or the CPC the contractor should seek resolution from the CO.

3. *Requests for Government Property.*

In accordance with FAR 45.102, the contractor shall furnish all property required for performing Government contracts. If a contractor believes that Government property is required for performance of the contract, the contractor shall submit a written request to the CO. At a minimum, the request shall contain the following elements:

a. Contract number for which the property is required.

b. An item(s) description, quantity and estimated cost.

c. Certification that no like contractor property exists which could be utilized.

d. A detailed description of the task-related purpose of the property.

e. Explanation of negative impact if property is not provided by the Government.

f. Lease versus purchase analysis shall be furnished with the request to acquire property on behalf of the Government, with the exception of requests for material purchases. The contractor may not proceed with acquisition of property on behalf of the Government until receipt of written authorization from the Contracting Officer.

4. *Transfer of Government Property.* When the contractor receives Government Property (GP), the contractor should receive, from the transferor, (either EPA or another contractor) all of the applicable data elements (Attachment 1 of this clause) needed to maintain the required records. Prior to signing an acceptance document for the property, the receiving contractor should perform a complete inventory of the property. Responsibility, as well as accountability, passes with the signed acceptance, in accordance with FAR 45.106. When, at the written direction of the CO, via contract modification, the contractor transfers Government Property to another contractor, or another Agency, the contractor shall provide the applicable data elements (Attachment 1 of this clause).

5. *Records of Government Property.*

a. In accordance with FAR 52.245–1, the contractor shall create and maintain records of all Government property, regardless of value, including property provided to and in the possession of a subcontractor. Material provided by the Government or acquired by the contractor and billed as a direct charge to the contract is Government property and records must be established as such.

b. The Contractor shall identify all Superfund property and designate it as such both on the item and on the Government property record. If it is not practicable to tag the item, the contractor shall write the ID number on a tag, card or other entity that may be kept with the item or in a file.

c. Support documentation used for posting entries to the property record shall provide complete, current and auditable data. Entries shall be posted to the record in a timely manner following an action.

d. For Government vehicles, in addition to the data elements required by EPA, the contractor shall also comply with the General Services Administration (GSA) and Department of Energy (DOE) record and report requirements supplied with all EPA provided motor vehicles. If the above requirements were not provided with the vehicle, the contractor shall notify the designated CPC and the Fleet Manager.

e. When Government property is disclosed to be in the management and/or control of the contractor but not provided under any contract, the contractor shall record and report the property in accordance with FAR 52.245–1.

6. *Inventories of Government Property.* The contractor shall conduct a complete physical inventory of EPA property at least once per year. The contractor shall report the results of the inventory, including any discrepancies, to the CO. Reconciliation of discrepancies shall be completed in accordance with the schedule negotiated with the CO. See section 10 herein, Contract Closeout, for information on final inventories.

7. *Reports of Government Property.* EPA requires an annual summary report, for each contract, by contract number, of Government property in the contractor's possession. The annual summary is due as of September 30th of each year, and upon contract termination or expiration.

a. For each classification listed on the EPA Property Report form, with the exception of material, the contractor shall provide the total acquisition cost and total quantity. If there are zero items in a classification, or if there is an ending balance of zero, the classification must be listed with zeros in the quantity and acquisition cost columns.

b. For material, the contractor shall provide the total acquisition cost only.

c. Property classified as Plant Equipment, Superfund and Special Test Equipment must be reported on two separate lines. The first line shall include the total acquisition cost and quantity of all items or systems with a unit acquisition cost of $25,000 or more. The second line shall include the total acquisition cost and quantity of all items with a unit acquisition cost of less than $25,000.

d. For items comprising a system, which is defined as ''a group of interacting items functioning as a complex whole,'' the contractor may maintain the record as a system noting all components of the system under the main component or maintain individual records for each item. However, for the annual report of Government property the components must be reported as a system with one total dollar amount for the system, if that system total is $25,000 or more.

e. The reports are to be received at EPA by the CPC by October 5th of each year.

f. Distribution shall be as follows:

Original to: CPC.

One copy: CO.

g. Contractors are required to comply with GSA and DOE special reporting requirements for motor vehicles. A statement of these requirements will be

provided by the EPA Facility Management and Services Division (FMSD) concurrent with receipt of each vehicle.

h. The contractor shall provide detailed reports on an as-needed basis, as may be requested by the CO or the CPC.

8. *Disposition of Government Property.* The disposition process is composed of three distinct phases: Identification, reporting, and final disposition.

a. *Identification.* The disposition process begins with the contractor identifying Government property that is no longer required for contract performance. Effective contract property management systems provide for identification of excess as it occurs. Once Government property has been determined to be excess to the accountable contract, it must be screened against the contractor's other EPA contracts for further use. If the property may be reutilized, the contractor shall notify the CO in writing. Government property will be transferred via contract modifications to other contracts only when the COs on both the current contract and the receiving contract authorize the transfer.

b. *Reporting.*

(i) *EPA.* Government property shall be reported in accordance with FAR 52.245–1. The Standard Form, SF 1428, Inventory Disposal Schedule, provides the format for reporting excess Government property. Instructions for completing and when to use the form may be found at FAR 52.245–1 (j). Forward the completed SF 1428 to the CPC. The SF 1428 is available at *http://www.arnet.gov/far/current/html/FormsStandard54.html.* Superfund property must contain a Superfund notification and the following language must be displayed on the form: ''Note to CO: Reimbursement to the EPA Superfund is required.''

(ii) *DCMA.* If the EPA contract has been re-delegated to DCMA, the excess items will be entered into the Plant Clearance Automated Reutilization Screening System (PCARSS). Access and information pertaining to this system may be addressed to the DCMA Plant Clearance Officer (PLCO).

c. *Disposition Instructions.*

(i) *Retention.* When Government property is identified as excess, the CO may direct the contractor in writing to retain all or part of the excess Government Property under the current contract for possible future requirements.

(ii) *Return to EPA.* When Government property is identified as excess, the CO may direct the contractor in writing to return those items to EPA inventory. The contractor shall ship/deliver the property in accordance with the instructions provided by the CO.

(iii) *Transfer.* When Government property is identified as excess, the CO may direct the contractor in writing to transfer the property to another EPA contractor. The contractor shall transfer the property by shipping it in accordance with the instructions provided by the CO. To effect transfer of accountability, the contractor shall provide the recipient of the property with the applicable data elements set forth in Attachment 1 of this clause.

(iv) *Sale.* If GSA or the DCMA PLCO conducts a sale of the excess Government property, the contractor shall allow prospective bidders access to property offered for sale.

(v) *Abandonment.* Abandoned property must be disposed of in a manner that does not endanger the health and safety of the public.

If the contract is delegated to DCMA and the contractor has input EPA property into the PCARSS system, the EPA Property Utilization Officer (PUO) shall notify the CO. The CO shall notify the contractor in writing of those items EPA would like to retain, have returned or transferred to another EPA contractor. The contractor shall notify the DCMA PLCO and request withdrawal of those items from the inventory schedule.

The contractor shall update the Government property record to indicate the disposition of the item and to close the record. The contractor shall also obtain either a signed receipt or proof of shipment from the recipient.

The contractor shall notify the CO when all actions pertaining to disposition have been completed. The contractor shall complete an EPA Property report with changes, to include supporting documentation of completed disposition actions and submit it to the CPC.

9. *Decontamination.* In addition to the requirements of the ''Government Property'' clause and prior to performing disposition of any EPA Government Property, the contractor shall certify in writing that the property is free from contamination by any hazardous or toxic substances.

10. *Contract Closeout.* The contractor shall complete a physical inventory of all Government property at contract completion and the results, including any discrepancies, shall be reported to the CO. If the contract is delegated to DCMA, the physical inventory report will be submitted to the EPA CO and a copy submitted to the DCMA PA.

In the case of a terminated contract, the contractor shall comply with the inventory requirements set forth in the applicable termination clause. The results of the inventory, as well as a detailed inventory listing, must be forwarded to the CO and if delegated, a copy to the DCMA PA.

In order to expedite the disposal process, contractors may be required to, or may elect to submit to the CPC, an inventory schedule for disposal purposes up to six (6) months prior to contract completion. If such an inventory schedule is prepared, the contractor must indicate the earliest date that each item may be disposed. The contractor shall update all property records to show disposal action. The contractor shall notify the CO, and, if delegated, the DCMA PA, in writing, when all work has been completed under the contract and all Government property accountable to the contract has been disposed. The contractor shall complete a FINAL EPA Property report with all supporting documentation to the CPC.

Attachment 1

Required Data Element—In addition to the requirements of FAR 52.245–1(f)(vi), Reports of Government Property, the contractor is required to maintain, and report the following data elements for EPA Government property (all elements are not applicable to material):

Name and address of the administrative Contracting Officer.

Name of the contractor representative.

Business type.

Name and address of the contract property coordinator.

Superfund (Yes/No).

No. of Subcontractor/Alternate Locations.

Note: For items comprising a system which is defined as ''a group of interacting items functioning as a complex whole,'' the contractor may maintain the record as a system noting all components of the system under the main component or maintain individual records for each item. However, for the Annual Report of Government Property, the components must be reported as a system with one total dollar amount for the system, if that system total is $25,000 or more.

(End of clause.)

6. Revise section 1552.245–71 to read as follows:

§ 1552.245–71 Government-furnished data.

As prescribed in 1545.107 (b), insert the following contract clause in any contract that the Government is to furnish the Contractor data. Identify in the clause the data to be provided.

Government-Furnished Data

(a) The Government shall deliver to the Contractor the Government-furnished data described in the contract. If the data, suitable for its intended use, is not delivered to the Contractor, the Contracting Officer shall equitably adjust affected provisions of this contract in accordance with the ''Changes'' clause when:

(1) The Contractor submits a timely written request for an equitable adjustment; and

(2) The facts warrant an equitable adjustment.

(b) Title to Government-furnished data shall remain in the Government.

(c) The Contractor shall use the Government-furnished data only in connection with this contract.

(d) The following data will be furnished to the Contractor on or about the time indicated:

(End of clause.)

§ 1552.245–72 and § 1552.245–73 [Removed]

7. Remove sections 1552.245–72 and 1552.245–73.

[FR Doc. E9–14460 Filed 6–22–09; 8:45 am]

BILLING CODE 6560–50–P

Notices

Federal Register

Vol. 74, No. 119

Tuesday, June 23, 2009

This section of the FEDERAL REGISTER contains documents other than rules or proposed rules that are applicable to the public. Notices of hearings and investigations, committee meetings, agency decisions and rulings, delegations of authority, filing of petitions and applications and agency statements of organization and functions are examples of documents appearing in this section.

DEPARTMENT OF AGRICULTURE

Animal and Plant Health Inspection Service

[Docket No. APHIS–2009–0045]

Notice of Request for Approval of an Information Collection; National Animal Health Monitoring System; Poultry 2010 Study

AGENCY: Animal and Plant Health Inspection Service, USDA.

ACTION: New information collection; comment request.

SUMMARY: In accordance with the Paperwork Reduction Act of 1995, this notice announces the Animal and Plant Health Inspection Service's intention to initiate an information collection to support the National Animal Health Monitoring System; Poultry 2010 Study.

DATES: We will consider all comments that we receive on or before August 24, 2009.

ADDRESSES: You may submit comments by either of the following methods:

- *Federal eRulemaking Portal:* Go to *http://www.regulations.gov/fdmspublic/component/main?main=DocketDetail&d=APHIS-2009-0045* to submit or view comments and to view supporting and related materials available electronically.
- *Postal Mail/Commercial Delivery:* Please send two copies of your comment to Docket No. APHIS–2009–0045, Regulatory Analysis and Development, PPD, APHIS, Station 3A–03.8, 4700 River Road, Unit 118, Riverdale, MD 20737–1238. Please state that your comment refers to Docket No. APHIS–2009–0045.

Reading Room: You may read any comments that we receive on this docket in our reading room. The reading room is located in room 1141 of the USDA South Building, 14th Street and Independence Avenue, SW., Washington, DC. Normal reading room hours are 8 a.m. to 4:30 p.m., Monday through Friday, except holidays. To be sure someone is there to help you, please call (202) 690–2817 before coming.

Other Information: Additional information about APHIS and its programs is available on the Internet at *http://www.aphis.usda.gov*.

FOR FURTHER INFORMATION CONTACT: For information on the Poultry 2010 Study, contact Ms. Sandra Warnken, Management and Program Analyst, Centers for Epidemiology and Animal Health, VS, APHIS, 2150 Centre Avenue, Building B MS 2E3, Fort Collins, CO 80526; (970) 494–7193. For copies of more detailed information on the information collection, contact Mrs. Celeste Sickles, APHIS' Information Collection Coordinator, at (301) 851–2908.

SUPPLEMENTARY INFORMATION:

Title: National Animal Health Monitoring System; Poultry 2010 Study.

OMB Number: 0579–xxxx.

Type of Request: Approval of a new information collection.

Abstract: Under the Animal Health Protection Act (7 U.S.C. 8301 *et seq.*), the Animal and Plant Health Inspection Service (APHIS) of the United States Department of Agriculture is authorized, among other things, to protect the health of our Nation's livestock and poultry populations by preventing the introduction and interstate spread of serious diseases and pests of livestock and for eradicating such diseases from the United States when feasible. In connection with this mission, the Animal and Plant Health Inspection Service (APHIS) operates the National Animal Health Monitoring System (NAHMS), which collects nationally representative, statistically valid, and scientifically sound data on the prevalence and economic importance of livestock diseases and associated risk factors.

NAHMS' national studies have evolved into a collaborative industry and government initiative to help determine the most effective means of preventing and controlling diseases of livestock, including poultry. APHIS is the only agency responsible for collecting data on poultry health. Participation in any NAHMS study is voluntary, and all data are confidential.

APHIS plans to conduct the Poultry 2010 Study as part of an ongoing series of NAHMS studies on the U.S. poultry population. The purpose of the study is to collect information through questionnaires and biologic sampling to:

- Describe the structure of commercial poultry industries, including interactions, movements, and biosecurity practices. Describe farm-level practices for chicken primary breeder and multiplier flocks. Identify critical management practices associated with exclusion of disease (such as Mycoplasma).
- Estimate the prevalence and identify risk factors associated with clostridial dermatitis (cellulitis/gangrenous dermatitis) on turkey grower farms.
- Estimate the size of the urban chicken population in four States. Describe bird health, movement, and biosecurity practices of urban chicken flocks.

The 51 companies targeted for the study account for approximately 85 percent of broiler meat, 71 percent of layers, and 76 percent of turkeys slaughtered for human consumption. The study will consist of an online company-level questionnaire; an online farm-level questionnaire regarding chicken primary breeder and multiplier flocks; and an on-farm questionnaire, including biologic sampling for turkey grower flocks, completed by either a company veterinarian or farm manager. Additionally, an APHIS employee or APHIS-designated representative will conduct a phone survey to estimate the size of the urban chicken population in California, Colorado, Florida, and New York, and make available a questionnaire addressing health and management practices to consumers purchasing chicken feed at feed and/or pet supply stores in those States.

Information from this study will be analyzed and organized into descriptive reports, and information sheets will be derived from those reports. Information sheets will be disseminated to and used by poultry producers, animal health officials, private veterinary practitioners, animal industry groups, policymakers, public health officials, multimedia, academia, and others to improve poultry productivity and competitiveness. The data will help APHIS address emerging issues and inform poultry disease spread simulation models.

We are asking the Office of Management and Budget (OMB) to

approve our use of these information collection activities for 3 years.

The purpose of this notice is to solicit comments from the public (as well as affected agencies) concerning our information collection. These comments will help us:

(1) Evaluate whether the collection of information is necessary for the proper performance of the functions of the Agency, including whether the information will have practical utility;

(2) Evaluate the accuracy of our estimate of the burden of the information collection, including the validity of the methodology and assumptions used;

(3) Enhance the quality, utility, and clarity of the information to be collected; and

(4) Minimize the burden of the information collection on those who are to respond, through use, as appropriate, of automated, electronic, mechanical, and other collection technologies, e.g., permitting electronic submission of responses.

Estimate of burden: The public reporting burden for this collection of information is estimated to average 0.050099 hours per response.

Respondents: U.S. poultry producers, urban chicken owners, consumers who purchase chicken feed, company veterinarians, farm managers, APHIS-designated representatives.

Estimated annual number of respondents: 52,651.

Estimated annual number of responses per respondent: 1.04178.

Estimated annual number of responses: 54,851.

Estimated total annual burden on respondents: 2,748 hours. (Due to averaging, the total annual burden hours may not equal the product of the annual number of responses multiplied by the reporting burden per response.)

All responses to this notice will be summarized and included in the request for OMB approval. All comments will also become a matter of public record.

Done in Washington, DC, this 17th day of June 2009.

Kevin Shea,

Acting Administrator, Animal and Plant Health Inspection Service.

[FR Doc. E9–14714 Filed 6–22–09; 8:45 am]

BILLING CODE 3410–34–P

DEPARTMENT OF AGRICULTURE

Animal and Plant Health Inspection Service

[Docket No. APHIS–2009–0044]

Notice of Request for Extension of Approval of an Information Collection; Beetle Busters Survey; Asian Longhorned Beetle Cooperative Eradication Program

AGENCY: Animal and Plant Health Inspection Service, USDA.

ACTION: Extension of approval of an information collection; comment request.

SUMMARY: In accordance with the Paperwork Reduction Act of 1995, this notice announces the Animal and Plant Health Inspection Service's intention to request an extension of approval of an information collection associated with the Asian longhorned beetle cooperative eradication program.

DATES: We will consider all comments that we receive on or before August 24, 2009.

ADDRESSES: You may submit comments by either of the following methods:

- *Federal eRulemaking Portal:* Go to *http://www.regulations.gov/fdmspublic/component/main?main=DocketDetail&d=APHIS-2009-0044* to submit or view comments and to view supporting and related materials available electronically.
- *Postal Mail/Commercial Delivery:* Please send two copies of your comment to Docket No. APHIS–2009–0044, Regulatory Analysis and Development, PPD, APHIS, Station 3A–03.8, 4700 River Road, Unit 118, Riverdale, MD 20737–1238. Please state that your comment refers to Docket No. APHIS–2009–0044.

Reading Room: You may read any comments that we receive on this docket in our reading room. The reading room is located in room 1141 of the USDA South Building, 14th Street and Independence Avenue, SW., Washington, DC. Normal reading room hours are 8 a.m. to 4:30 p.m., Monday through Friday, except holidays. To be sure someone is there to help you, please call (202) 690–2817 before coming.

Other Information: Additional information about APHIS and its programs is available on the Internet at *http://www.aphis.usda.gov.*

FOR FURTHER INFORMATION CONTACT: For information on the Beetle Busters Survey, contact Ms. Suzanne Bond, Assistant Director, Public Affairs, LPA, APHIS, 4700 River Road, Unit 51, Riverdale, MD 20737; (301) 734–5175. For copies of more detailed information on the information collection, contact Mrs. Celeste Sickles, APHIS' Information Collection Coordinator, at (301) 851–2908.

SUPPLEMENTARY INFORMATION:

Title: Beetle Busters Survey; Asian Longhorned Beetle Cooperative Eradication Program.

OMB Number: 0579–0311.

Type of Request: Extension of approval of an information collection.

Abstract: The Asian longhorned beetle (ALB, *Anoplophora glabripennis*), an insect native to China, Japan, Korea, and the Isle of Hainan, is a destructive pest of hardwood trees. It attacks many healthy hardwood trees, including maple, horse chestnut, birch, poplar, willow, and elm. The beetle bores into the heartwood of a host tree, eventually killing the tree. Immature beetles bore into tree trunks and branches, causing heavy sap flow from wounds and sawdust accumulation at tree bases. They feed on, and over-winter in, the interiors of trees. Adult beetles emerge in the spring and summer months from round holes approximately three-eighths of an inch in diameter (about the size of a dime) that they bore through branches and trunks of trees. After emerging, adult beetles feed for 2 to 3 days and then mate. Adult females then lay eggs in oviposition sites that they make on the branches of trees. A new generation of ALB is produced each year. If this pest moves into the hardwood forests of the United States, the nursery, maple syrup, and forest product industries could experience severe economic losses. In addition, urban and forest ALB infestations will result in environmental damage, aesthetic deterioration, and a reduction in public enjoyment of recreational spaces. If the ALB were to become established in North America, approximately 1.2 billion trees would be at risk of being infested, resulting in potential losses of up to $669 billion.

The U.S. Department of Agriculture's Animal and Plant Health Inspection Service (APHIS) has administered an ALB Cooperative Eradication Program (the program) since 1996 to eradicate this destructive pest from the United States. Areas found to be infested are quarantined, and the movement of host material from the area is restricted to prevent the spread of the ALB. Infested host material is removed or treated. Successful eradication efforts have resulted in a number of infested areas being removed from quarantine, and, over the years, the program has made steady progress. However, the ALB

continues to be a serious threat, and APHIS believes that public support is crucial to eradication efforts.

In this regard, APHIS enlists the public's assistance in reporting the presence or absence of the ALB in their local areas. APHIS invites members of the public to report the results of any surveys they conduct using a simple on-line form on the Internet to record sightings and nonsightings. Such reports of surveys for the ALB conducted by members of the general public, nature organizations, school groups, garden clubs, and others help APHIS develop a history of the ALB's presence and activity in particular areas and supplement the work done by the program's surveyors. If the public reports signs of the ALB, APHIS takes appropriate steps to determine whether the ALB is indeed present in the area and to what extent. In turn, negative reports help APHIS affirm the absence of ALB in a particular area and facilitate progress towards deregulation of the area.

We are asking the Office of Management and Budget (OMB) to approve our use of this information collection activity for an additional 3 years.

The purpose of this notice is to solicit comments from the public (as well as affected agencies) concerning our information collection. These comments will help us:

(1) Evaluate whether the collection of information is necessary for the proper performance of the functions of the Agency, including whether the information will have practical utility;

(2) Evaluate the accuracy of our estimate of the burden of the collection of information, including the validity of the methodology and assumptions used;

(3) Enhance the quality, utility, and clarity of the information to be collected; and

(4) Minimize the burden of the collection of information on those who are to respond, through use, as appropriate, of automated, electronic, mechanical, and other collection technologies; e.g., permitting electronic submission of responses.

Estimate of burden: The public reporting burden for this collection of information is estimated to average 0.1129774 hours per response.

Respondents: General public, nature organizations, school groups, and garden clubs.

Estimated annual number of respondents: 5,000.

Estimated annual number of responses per respondent: 1.0002.

Estimated annual number of responses: 5,001.

Estimated total annual burden on respondents: 565 hours. (Due to averaging, the total annual burden hours may not equal the product of the annual number of responses multiplied by the reporting burden per response.)

All responses to this notice will be summarized and included in the request for OMB approval. All comments will also become a matter of public record.

Done in Washington, DC, this 17th day of June 2009.

Kevin Shea,

Acting Administrator, Animal and Plant Health Inspection Service.

[FR Doc. E9–14715 Filed 6–22–09; 8:45 am]

BILLING CODE 3410–34–P

DEPARTMENT OF AGRICULTURE

Animal and Plant Health Inspection Service

[Docket No. APHIS–2009–0038]

Notice of Request for Approval of an Information Collection; National Animal Health Monitoring System; Catfish 2010 Study

AGENCY: Animal and Plant Health Inspection Service, USDA.

ACTION: New information collection; comment request.

SUMMARY: In accordance with the Paperwork Reduction Act of 1995, this notice announces the Animal and Plant Health Inspection Service's intention to initiate an information collection to support the National Animal Health Monitoring System Catfish 2010 Study.

DATES: We will consider all comments that we receive on or before August 24, 2009.

ADDRESSES: You may submit comments by either of the following methods:

- *Federal eRulemaking Portal:* Go to *http://www.regulations.gov/fdmspublic/component/main?main=DocketDetail&d=APHIS–2009–0038* to submit or view comments and to view supporting and related materials available electronically.
- *Postal Mail/Commercial Delivery:* Please send two copies of your comment to Docket No. APHIS–2009–0038, Regulatory Analysis and Development, PPD, APHIS, Station 3A–03.8, 4700 River Road, Unit 118, Riverdale, MD 20737–1238. Please state that your comment refers to Docket No. APHIS–2009–0038.

Reading Room: You may read any comments that we receive on this docket in our reading room. The reading room is located in room 1141 of the USDA South Building, 14th Street and Independence Avenue, SW., Washington, DC. Normal reading room hours are 8 a.m. to 4:30 p.m., Monday through Friday, except holidays. To be sure someone is there to help you, please call (202) 690–2817 before coming.

Other Information: Additional information about APHIS and its programs is available on the Internet at *http://www.aphis.usda.gov*.

FOR FURTHER INFORMATION CONTACT: For information on the Catfish 2010 Study, contact Ms. Sandra Warnken, Management and Program Analyst, Centers for Epidemiology and Animal Health, VS, APHIS, 2150 Centre Avenue, Building B MS 2E3, Fort Collins, CO 80526; (970) 494–7193. For copies of more detailed information on the information collection, contact Mrs. Celeste Sickles, APHIS' Information Collection Coordinator, at (301) 851–2908.

SUPPLEMENTARY INFORMATION:

Title: National Animal Health Monitoring System; Catfish 2010 Study.

OMB Number: 0579–xxxx.

Type of Request: Approval of a new information collection.

Abstract: Under the Animal Health Protection Act (7 U.S.C. 8301 *et seq.*), the Animal and Plant Health Inspection Service (APHIS) of the United States Department of Agriculture (USDA) is authorized, among other things, to protect the health of our Nation's livestock and poultry populations by preventing the introduction and interstate spread of serious diseases and pests of livestock and for eradicating such diseases from the United States when feasible. In connection with this mission, APHIS operates the National Animal Health Monitoring System (NAHMS), which collects nationally representative, statistically valid, and scientifically sound data on the prevalence and economic importance of livestock diseases and associated risk factors.

NAHMS' national studies have evolved into a collaborative industry and government initiative to help determine the most effective means of preventing and controlling diseases of livestock, including farm-raised fish. APHIS is the only agency responsible for collecting data on aquaculture health. Participation in any NAHMS study is voluntary, and all data are confidential.

APHIS plans to conduct the Catfish 2010 study (Catfish 2010) as part of an ongoing series of NAHMS studies on the U.S. aquaculture population. The purpose of Catfish 2010 is to support the catfish farming industry by providing

current information on production methods and catfish health status. The study includes objectives to:

• Describe foodsize fish production practices, including stocking, feeding, pond management, and general practices.

• Examine fingerling production practices, including brood stock management, hatchery management, vaccination practices, fingerling pond management, and stocking and feeding practices.

• Describe the prevalence of disease problems in fingerling and foodsize fish, disease control and treatment practices, and risk factors associated with disease.

• Develop baseline information on the use of hybrid channel x blue catfish production by the industry.

• Evaluate trends in foodsize fish and fingerling management practices from 2003 to 2010.

Catfish 2010 will take place on farms in Alabama, Arkansas, Louisiana, and Mississippi, which account for 91.6 percent of 2008 total catfish sales and 90.9 percent of the water surface acres for catfish production (National Agricultural Statistics Service, USDA, Catfish Production Report, January 2009). The type, quantity, and frequency of data collected by NAHMS through this study are unique in the United States. A comparable study of the catfish industry was conducted by NAHMS in 2003. No other entity/source is collecting and analyzing data on the health of the U.S. catfish industry. The potential benefits to the industry from Catfish 2010 include increased production through enhanced pond management and increased consumer confidence in quality through disease reduction.

Information from this study will be disseminated to and used by aquaculture producers, animal health officials, private veterinary practitioners, animal industry groups, policymakers, public health officials, multimedia, educational institutions, and others to improve aquaculture productivity and competitiveness.

We are asking the Office of Management and Budget (OMB) to approve our use of these information collection activities for 3 years.

The purpose of this notice is to solicit comments from the public (as well as affected agencies) concerning our information collection. These comments will help us:

(1) Evaluate whether the collection of information is necessary for the proper performance of the functions of the Agency, including whether the information will have practical utility;

(2) Evaluate the accuracy of our estimate of the burden of the information collection, including the validity of the methodology and assumptions used;

(3) Enhance the quality, utility, and clarity of the information to be collected; and

(4) Minimize the burden of the information collection on those who are to respond, through use, as appropriate, of automated, electronic, mechanical, and other collection technologies, e.g., permitting electronic submission of responses.

Estimate of burden: The public reporting burden for this collection of information is estimated to average 0.4103174 hours per response.

Respondents: Aquaculture industry personnel and company and independent producers.

Estimated annual number of respondents: 700.

Estimated annual number of responses per respondent: 1.8.

Estimated annual number of responses: 1,260.

Estimated total annual burden on respondents: 517 hours. (Due to averaging, the total annual burden hours may not equal the product of the annual number of responses multiplied by the reporting burden per response.)

All responses to this notice will be summarized and included in the request for OMB approval. All comments will also become a matter of public record.

Done in Washington, DC, this 17th day of June 2009.

Kevin Shea,

Acting Administrator, Animal and Plant Health Inspection Service.

[FR Doc. E9–14717 Filed 6–22–09; 8:45 am]

BILLING CODE 3410–34–P

DEPARTMENT OF AGRICULTURE

Animal and Plant Health Inspection Service

[Docket No. APHIS–2009–0041]

Notice of Request for Extension of Approval of an Information Collection; Certification Program for Imported Articles of Pelargonium spp. and Solanum spp. to Prevent the Introduction of Potato Brown Rot

AGENCY: Animal and Plant Health Inspection Service, USDA.

ACTION: Extension of approval of an information collection; comment request.

SUMMARY: In accordance with the Paperwork Reduction Act of 1995, this notice announces the Animal and Plant Health Inspection Service's intention to request an extension of approval of an information collection associated with regulations for a certification program for imported articles of *Pelargonium* spp. and *Solanum* spp. to prevent the introduction of potato brown rot into the United States.

DATES: We will consider all comments that we receive on or before August 24, 2009.

ADDRESSES: You may submit comments by either of the following methods:

• *Federal eRulemaking Portal:* Go to *http://www.regulations.gov/fdmspublic/component/main?main=DocketDetail&d=APHIS-2009–0041* to submit or view comments and to view supporting and related materials available electronically.

• *Postal Mail/Commercial Delivery:* Please send two copies of your comment to Docket No. APHIS–2009–0041, Regulatory Analysis and Development, PPD, APHIS, Station 3A–03.8, 4700 River Road, Unit 118, Riverdale, MD 20737–1238. Please state that your comment refers to Docket No. APHIS–2009–0041.

Reading Room: You may read any comments that we receive on this docket in our reading room. The reading room is located in room 1141 of the USDA South Building, 14th Street and Independence Avenue, SW., Washington, DC. Normal reading room hours are 8 a.m. to 4:30 p.m., Monday through Friday, except holidays. To be sure someone is there to help you, please call (202) 690–2817 before coming.

Other Information: Additional information about APHIS and its programs is available on the Internet at *http://www.aphis.usda.gov.*

FOR FURTHER INFORMATION CONTACT: For information on regulations to prevent the introduction of potato brown rot into the United States, contact Mr. Vedpal Malik, Senior Agriculturalist, Quarantine Policy, Analysis and Support, PPQ, APHIS, 4700 River Road, Unit 60, Riverdale, MD 20732–1231; (301) 734–6774. For copies of more detailed information on the information collection, contact Mrs. Celeste Sickles, APHIS' Information Collection Coordinator, at (301) 851–2908.

SUPPLEMENTARY INFORMATION:

Title: Certification Program for Imported Articles of *Pelargonium* spp. and *Solanum* spp. to Prevent the Introduction of Potato Brown Rot.

OMB Number: 0579–0221.

Type of Request: Extension of approval of an information collection.

Abstract: Under the Plant Protection Act (7 U.S.C. 7701 *et seq.*), the Animal

and Plant Health Inspection Service is authorized to prohibit or restrict the importation of plants, plant products, plant pests, and other articles to prevent the introduction of plant pests and noxious weeds into the United States.

The regulations in 7 CFR part 319 prohibit or restrict the importation of certain plants and plant products into the United States to prevent the introduction of plant pests. The regulations contained in ''Subpart—Nursery Stock, Plants, Roots, Bulbs, Seeds, and Other Plant Products,'' 319.37 through 319.37–14 (referred to below as the regulations), restrict, among other things, the importation of living plants, plant parts, seeds, and plant cuttings for propagation.

The regulations include a certification program for articles of *Pelargonium* spp. and *Solanum* spp. imported from countries where the bacterium *Ralstonia solanacearum* race 3 biovar 2 is known to occur. The requirements of the certification program were designed to ensure that *Ralstonia solanacearum* race 3 biovar 2 will not be introduced into the United States through the importation of articles of *Pelargonium* spp. and *Solanum* spp. This bacterial strain causes potato brown rot, which causes potatoes to rot through, making them unusable and seriously affecting potato yields.

The certification program requires the collection of information through phytosanitary certificates, trust funds, and compliance agreements.

We are asking the Office of Management and Budget (OMB) to approve our use of these information collection activities for an additional 3 years.

The purpose of this notice is to solicit comments from the public (as well as affected agencies) concerning our information collection. These comments will help us:

(1) Evaluate whether the collection of information is necessary for the proper performance of the functions of the Agency, including whether the information will have practical utility;

(2) Evaluate the accuracy of our estimate of the burden of the collection of information, including the validity of the methodology and assumptions used;

(3) Enhance the quality, utility, and clarity of the information to be collected; and

(4) Minimize the burden of the collection of information on those who are to respond, through use, as appropriate, of automated, electronic, mechanical, and other collection technologies; *e.g.,* permitting electronic submission of responses.

Estimate of burden: The public reporting burden for this collection of information is estimated to average 1 hour per response.

Respondents: Importers and foreign national plant protection organizations.

Estimated annual number of respondents: 27.

Estimated annual number of responses per respondent: 37.851851.

Estimated annual number of responses: 1,022.

Estimated total annual burden on respondents: 1,022 hours. (Due to averaging, the total annual burden hours may not equal the product of the annual number of responses multiplied by the reporting burden per response.)

All responses to this notice will be summarized and included in the request for OMB approval. All comments will also become a matter of public record.

Done in Washington, DC, this 17th day of June 2009.

Kevin Shea,

Acting Administrator, Animal and Plant Health Inspection Service.

[FR Doc. E9–14716 Filed 6–22–09; 8:45 am]

BILLING CODE 3410–34–P

DEPARTMENT OF AGRICULTURE

Grain Inspection, Packers and Stockyards Administration

Designation in the Northeast Texas Region

AGENCY: Grain Inspection, Packers and Stockyards Administration, USDA.

ACTION: Notice.

SUMMARY: Central Illinois Grain Inspection, Inc. (Central Illinois), d/b/a Lone Star Grain Inspection in Texas, has requested that the Grain Inspection, Packers and Stockyards Administration (GIPSA) amend its designation to remove the northeast Texas region from its assigned geographic area. GIPSA is amending Central Illinois' designation and is designating Gulf Country Inspection Service, Inc. (Gulf Country) to provide official services in the northeast Texas area.

DATES: *Effective Date:* June 23, 2009.

ADDRESSES: USDA, GIPSA, Compliance Division, STOP 3604, Room 1647–S, 1400 Independence Avenue, SW., Washington, DC 20250–3604.

FOR FURTHER INFORMATION CONTACT: Thomas C. O'Connor at 202–720–8262 or e-mail *Thomas.C.OConnor@usda.gov.*

SUPPLEMENTARY INFORMATION: Section 7(f)(1) of the United States Grain Standards Act (USGSA or Act) (7 U.S.C. 71–87k) authorizes GIPSA's Administrator to designate a qualified applicant to provide official services in a specified area after determining that the applicant is better able than any other applicant to provide such official services.

Under section 7(g)(1) of the USGSA, designations of official agencies are effective for a period not longer than 3 years unless terminated by the Secretary, but may be renewed according to the criteria and procedures prescribed in section 7(f) of the Act.

Central Illinois was selected to perform official services in the northeast Texas area effective April 20, 2009 (see 74 FR 17940). Gulf Country also applied for designation in that action. However, on May 18, 2009, Central Illinois requested that its designation be amended to remove the northeast Texas area from its geographic area, the same geographic area that was subject to the previous designation action. Given these circumstances GIPSA, again, evaluated all available information regarding the designation criteria in Section 7(f)(1) of the USGSA (7 U.S.C. 79(f)(1)) and determined that Gulf Country is able to provide official services in the geographic area specified below, effective June 23, 2009. This designation terminates December 31, 2010. The designation of Central Illinois is amended consistent with this action.

Pursuant to Section 7(f)(2) of the Act, the following geographic area in the State of Texas is assigned to Gulf Country:

- Bounded on the North by the northern Young, Jack, Montague, Cooke, Grayson, Fannin, Lamar, Red River, Morris, and Marion County lines east to the Texas State line;
- Bounded on the East by the eastern Texas State line south to the southern Shelby County line;
- Bounded on the South by the southern Shelby, Rusk, Smith, Henderson, Navarro, Hill, Bosque, Hamilton, and Mills County lines west to the western Mills county line; and
- Bounded on the West by the western Mills, Comanche, Eastland, Stephens, and Young County lines north to the northern Young County line.

Interested persons may obtain official services by contacting Gulf Country via mail at 6852 Talbot Parkway, Dallas, TX 75232 or phone at 214–500–5212.

Authority: 7 U.S.C. 71–87k.

J. Dudley Butler,

Administrator, Grain Inspection, Packers and Stockyards Administrator.

[FR Doc. E9–14650 Filed 6–22–09; 8:45 am]

BILLING CODE 3410–KD–P

DEPARTMENT OF AGRICULTURE

Forest Service

Grand Mesa, Uncompahgre and Gunnison National Forests Norwood Ranger District; Alta Town-site Road and Utilities Access, ''Alta Access Project,'' Hinsdale County, CO

AGENCY: Forest Service, USDA.

ACTION: Notice of Intent to Prepare an Environmental Impact Statement.

SUMMARY: A application for access to the town-site of Alta, Colorado under Alaska National Interest Lands Conservation Act (ANILCA) has been submitted for approval. The Forest Service (USFS) will prepare an Environmental Impact Statement (EIS) to assess and disclose the environmental effects of improved road and utilities access to the private inholdings at Alta, Colorado.

The Grand Mesa, Uncompahgre and Gunnison (GMUG) National Forest is initiating an environmental analysis in response to an application submitted by Silver Mountain Industries, Inc (SMI) for road and utility improvements, and year round access to SMI owned properties at and around the town-site of Alta. The SMI Property is located about one mile south of the incorporated limits of the Town of Mountain Village, in San Miguel County, Colorado. This project is commonly referred to as the Alta Access project. SMI is planning the development of 28 residential lots on 540 acres of SMI owned private land at Alta. The application to the Forest Service for road and utility improvements is to support this planned residential development. The SMI cluster development plan has been approved by the San Miguel County Board of County Commissioners. Portions of the proposed road improvements would occur on National Forest System (NFS) lands; others would occur on private property over which the Forest Service has easements for existing National Forest System Road (NFSR) 632.

The Colorado Department of Transportation (CDOT) has determined that the existing intersection of Alta Access Road with State Highway 145 fails to meet AASHTO road design standards, is unsafe, and needs to be corrected.

The Alta Access Road is designated as both NFSR 632 and San Miguel County Road 64F. This road is currently used primarily by persons visiting the USFS managed Alta Lakes dispersed recreation area. SMI visitation generates modest traffic on the road, as do visits or trips to other privately owned lands in the area.

SMI claims, and the Forest Service agrees, that SMI does have a right of access to their property under the ANILCA. No Inventoried Roadless areas are affected by this proposal.

The Forest Service will prepare an Environmental Impact Statement (EIS) to assess and disclose the environmental effects of access and utilities development of the Alta Access Project.

The EIS will comply with the requirements of the National Environmental Policy Act (42 U.S.C. sections 4321–4370a), the National Forest Management Act (16 U.S.C. 1600–1614), and their implementing regulations.

DATES: Comments concerning the proposal and the scope of the analysis will be accepted and considered at any time after publication of this notice in the **Federal Register** and prior to a decision being made. To be most helpful in the design of the analysis, comments should be received within 45 days of publication of this NOI in the **Federal Register**. An initial scoping for this project was done with a comment period extending from mid-March to April 20, before it was determined that an EIS would be necessary. Comments submitted to the Forest Service during that scoping period will be considered fully, and do not need to be resubmitted.The draft EIS is expected to be filed with the Environmental Protection Agency (EPA) and available for public review during October 2009. When a draft EIS is available the EPA will publish a Notice of Availability (NOA) in the **Federal Register**. The comment period on the draft EIS will be for a period of not less than 45 days from the date the EPA publishes the NOA in the **Federal Register**. The final EIS is expected to be available in January 2010.

ADDRESSES: Send written comments to Jeff Burch, Grand Mesa, Uncompahgre and Gunnison National Forest, Supervisor's Office, 2250 Highway 50, Delta, CO 81416. Electronic mail (e-mail) may be sent to *comments-rocky-mountain-gmug@fs.fed.us* and FAX may be sent to (970) 874–6698. *Telephone:* (970) 874–6649.

FOR FURTHER INFORMATION CONTACT: Jeff Burch, Environmental Coordinator, Grand Mesa, Uncompahgre and Gunnison National Forests, 2250 Highway 50, Delta, Colorado 81416. *Telephone:* (970) 874–6649.

SUPPLEMENTARY INFORMATION:

Purpose and Need for Action

The primary purpose and need for this project is to provide adequate access to the SMI property at Alta, as required by the Alaska National Interest Lands Conservation Act (ANILCA).

There is a need to correct unsafe conditions with regard to the current design of the intersection with State Highway 145, and the location of the first segment of NFSR 632 above the State Highway. There is also a need to provide adequate access to secure reasonable use and enjoyment of the county approved subdivision located at Alta, including year round access. Current access is not maintained in winter, nor will it provide for the predicted year-round increase in use.

There is a need to reach SMI privately owned land with natural gas and phone/fiber optic services.

Proposed Action/Preliminary Alternatives

In general terms, the proposed Alta Access Road and Utility improvements would entail granting SMI authority for the following actions on National Forest System lands: (1) Making improvements to Alta Access Road and Highway 145 Intersection, (2) relocating the lower section of the Alta Access Road and decommissioning the portion of existing road that has been replaced; (3) making improvements to the upper section of Alta access Road; (4) establishing road and utility easements across two short segments of National Forest of odd shaped ownership, for internal subdivision purposes; (5) long term use and maintenance of the proposed road and utility improvements; (6) granting a driveway easement access for an adjoining private land parcel; and (7) permitting SMI to erect private signs along NFSR 632 directing people to their subdivision.

See http://www.fs.fed.us/r2/gmug/policy/lands/alta/FinalScopingMap_low_rez.pdf for a map showing the project vicinity and proposed action elements.

More specifically, the proposed action follows:

1. Road construction/reconstruction of NFSR 632 to provide access to Alta Townsite.

a. Reconstruction of the intersection of NFSR 632 and Hwy 145 to comply with the AASHTO standards and in compliance with CDOT requirements. The relocated Alta Access Road/Hwy 145 Intersection is proposed by SMI to occur approximately 50 feet to the north of the existing Alta Access Road/Hwy 145 Intersection within the area of the Hwy 145 ROW. An alternative being

considered is locating this intersection at the point of intersection of the old highway with Hwy 145, which is approximately ½ mile north of the existing intersection, across from the entrance to Sunshine campground. In either case this intersection with the highway would require construction of turning lanes and/or blending lanes on Hwy 145.

b. Relocation and construction as two 9-foot lanes, either paved or gravel, with 2 foot shoulders on either side, of the lower segment of NFSR 632 commencing at the Hwy 145 intersection and continuing to a point where it reconnects with the existing alignment. See Attached Map. Use of retaining walls would be emphasized to provide stability and reduce the area impacted, rather than expansive cuts and fills. Options to be considered in the analysis include the level of/standard of construction this road would be built to, including paving or gravel, width, turning radius of curves, design speed, and treatment of cut and fill.

c. Obliteration of, or decommissioning of, the segment of NFSR 632 that is being replaced. Options to be considered would address the level of ground disturbance for rehabilitation of this road alignment, or the use of it as a trail.

d. Re-construction as two 9 foot lanes, either paved or gravel, with 2-foot shoulders on either side plus ditches and other drainage structures, of the upper segment of NFSR 632 from the point where the relocated lower section joins the existing road, on the existing alignment to the SMI Property. Use of retaining walls would be consistent with the new construction, also to provide stability. Options in terms of road standards considered for this segment are the same as just above.

2. Use, repair and maintain the newly constructed/reconstructed road for year round access to Alta. This would include snowplowing.

3. Issuance of easements for, and construction of, short segments of road crossing National Forest System lands of internal subdivision roads and utility extensions at two locations. These are the small triangle shaped inclusion of NFS land, and a short segment where lower road crosses NFS to reach SMI. These would be built to the same standards as internal roads and utilities within the Alta subdivision.

4. Installation, operation, use, repair, and maintenance of utilities (specifically natural gas, phone/fiber optic) to the SMI property. Alternative routes for this access are (a) Along the old Boomerang Road from Mountain Village (this is the preferred route by the proponent), and (b) along the newly constructed and reconstructed NFSR 632 from Hwy 145.

5. ''Signage'' at the intersection of NFSR 632 with Hwy 145 indicating that this is the location of the access to Alta Subdivision.

6. Maintenance of a short segment of the old road alignment, instead of obliterating it with the replaced segment of lower NFSR 632, to serve as a driveway for property owner Richard Mayo.

As part of SMI proposals to mitigate impacts to winter recreation use of the Alta Lakes area, SMI has indicated plans to build a public parking area along the Alta Lakes access road, on SMI land to replace the parking that now takes place at the intersection with Hwy 145. As proposed by SMI, this parking area would accommodate approximately the same number of cars parking as are currently using the area at the bottom of the road near the highway.

Alaska National Interest Lands Conservation Act (ANILCA) of 1980

Section 1323 of ANILCA granted non-federal landowners the statutory right of access over public lands administered by the BLM (in Alaska only), and National Forest System lands anywhere, when such lands are needed to provide for the reasonable use and enjoyment of non-federal lands. The landowner's statutory right of access is limited to that which is adequate to secure to the owner the reasonable use and enjoyment of the subject non-federal land. The right of access is also subject to the reasonable rules and regulations of the Secretaries of Interior and Agriculture.

An ANILCA access situation exists where NFS lands are the only reasonable option available for the landowner to access their land for its reasonable use and enjoyment. In such cases, the Forest Service is obligated by the statute to grant such an access. However, the Forest Service has discretion in determining the location, design, and type of access that it will grant across Federal land. The type of access should be consistent with access to similarly situated lands in the area.

Lead and Cooperating Agencies

The Forest Service is the lead agency. San Miguel County and the Colorado Department of Transportation have been invited to become cooperating agencies. San Miguel County has declined. Colorado DOT has not responded.

Responsible Official

The Forest Supervisor of the Grand Mesa, Uncompahgre and Gunnison National Forests Charles S. Richmond, 2250 Highway 50, Delta, Colorado 81416 is the official responsible for making the decision on this action. He will document his decision and rationale in a Record of Decision.

Nature of Decision To Be Made

Several specific decisions are to be made through this process:

(1) Whether to authorize new construction of a segment of road, as proposed, connecting Highway 145 with upper portion of Alta Lakes road, or to authorize this segment of road elsewhere.

(2) Whether to authorize the upgrade of the upper portion of Alta Lakes road (NFSR 632) to just below the town-site of Alta, as proposed.

(3) Associated with 1 through 2 above, subject to what terms and conditions in terms of standards/specifications of construction and maintenance.

(4) What to do with the abandoned segment of NFSR 632.

(5) Whether, and by what route, and subject to what conditions to allow utilities access for phone/fiber optic and natural gas to the SMI property.

All of items 1–3 just above are being taken up under authorities of the Alaska National Interest Lands Act (ANICLA) as amended, and associated regulations at 36 CFR 251.

Scoping Process

Scoping for this project will consist of this notice in the **Federal Register**, mailing of this notice to parties known to be interested, a news release for publication in local newspapers, and notification of local elected representatives. At this time no public meetings are planned.

Preliminary Issues

The following have been identified as preliminary issues: Effects of road reconstruction, maintenance and use on Threatened or Engangered species (lynx); effects of potential road alignment along old highway location in terms of safety, effects to wetlands, impacts to private lands; what to do with the segment of the road that would be abandoned; effects of utilities installation along old Boomerang road on wildlife, and the redisturbance of the Boomerang road; and the effects of the proposed action on changing the character of the area.

Permits or Licenses Required

Additional permits or licenses which may be required in addition to Forest

Service authorizations include, but are not limited to the following: Permit from Colorado Department of Transportation for highway access; San Miguel County subdivision approval for the subdivision of private lands being accessed.

Comment Requested

This notice of intent initiates the scoping process which guides the development of the environmental impact statement. Public scoping describing the proposed ANILCA access to Alta town-site is being initiated with this Notice of Intent. Comments from this scoping effort will be reviewed to identify potential issues for this analysis. While comments are welcome at any time, comments received within 45 days of the publication of this notice in the **Federal Register** will be most useful for the identification of issues and the analysis of alternatives. The name and mailing address of commenters should be provided with their comments so that future documents pertaining to this environmental analysis and the decision can be provided to interested parties.

In the final EIS, the Forest Service will respond to any comments, received during the public review of the draft EIS, that pertain to the environmental analysis. Those comments and the Forest Service responses will be disclosed and discussed in the final EIS and will be considered when the final decision about this proposal is made.

Early Notice of Importance of Public Participation in Subsequent Environmental Review: A draft environmental impact statement will be prepared for comment. The comment period on the draft environmental impact statement will be 45 days from the date the Environmental Protection Agency publishes the notice of availability in the **Federal Register**.

The Forest Service believes, at this early stage, it is important to give reviewers notice of several court rulings related to public participation in the environmental review process. First, reviewers of draft environmental impact statements must structure their participation in the environmental review of the proposal so that it is meaningful and alerts an agency to the reviewer's position and contentions. *Vermont Yankee Nuclear Power Corp.* v. *NRDC,* 435 U.S. 519, 553 (1978). Also, environmental objections that could be raised at the draft environmental impact statement stage but that are not raised until after completion of the final environmental impact statement may be waived or dismissed by the courts. *City of Angoon* v. *Hodel,* 803 F.2d 1016, 1022 (9th Cir. 1986) and *Wisconsin Heritages, Inc.* v. *Harris,* 490 F. Supp. 1334, 1338 (E.D. Wis. 1980). Because of these court rulings, it is very important that those interested in this proposed action participate by the close of the 45-day comment period so that substantive comments and objections are made available to the Forest Service at a time when it can meaningfully consider them and respond to them in the final environmental impact statement.

To assist the Forest Service in identifying and considering issues and concerns on the proposed action, comments on the draft environmental impact statement should be as specific as possible. It is also helpful if comments refer to specific pages or chapters of the draft statement. Comments may also address the adequacy of the draft environmental impact statement or the merits of the alternatives formulated and discussed in the statement. Reviewers may wish to refer to the Council on Environmental Quality Regulations for implementing the procedural provisions of the National Environmental Policy Act at 40 CFR 1503.3 in addressing these points.

Comments received, including the names and addresses of those who comment, will be considered part of the public record on this proposal and will be available for public inspection.

Dated: June 4, 2009.

Sherry Hazelhurst,

Deputy Forest Supervisor.

[FR Doc. E9–14732 Filed 6–22–09; 8:45 am]

BILLING CODE 3410–11–P

COMMITTEE FOR THE IMPLEMENTATION OF TEXTILE AGREEMENTS

Determination Under the Textile and Apparel Commercial Availability Provision of the Dominican Republic-Central America-United States Free Trade Agreement (CAFTA–DR Agreement)

June 18, 2009.

AGENCY: The Committee for the Implementation of Textile Agreements.

ACTION: Determination to add a product in unrestricted quantities to Annex 3.25 of the CAFTA-DR Agreement.

EFFECTIVE DATE: June 23, 2009.

SUMMARY: The Committee for the Implementation of Textile Agreements (''CITA'') has determined that certain yarn dyed, plaid poplin fabric, as specified below, is not available in commercial quantities in a timely manner in the CAFTA-DR countries. The product will be added to the list in Annex 3.25 of the CAFTA-DR Agreement in unrestricted quantities.

FOR FURTHER INFORMATION CONTACT: Laurie Mease, Office of Textiles and Apparel, U.S. Department of Commerce, (202) 482-2043.

FOR FURTHER INFORMATION ON-LINE: http://web.ita.doc.gov/tacgi/CaftaReqTrack.nsf. Reference number: 120.2009.05.15.Fabric.SS&AforCintasCorp.

SUPPLEMENTARY INFORMATION:

Authority: The CAFTA-DR Agreement; Section 203(o)(4) of the Dominican Republic-Central America-United States Free Trade Agreement Implementation Act (CAFTA-DR Implementation Act), Pub. Law 109-53; the Statement of Administrative Action (SAA), accompanying the CAFTA-DR Implementation Act; and Presidential Proclamations 7987 (February 28, 2006) and 7996 (March 31, 2006).

BACKGROUND:

The CAFTA-DR Agreement provides a list in Annex 3.25 for fabrics, yarns, and fibers that the Parties to the CAFTA-DR Agreement have determined are not available in commercial quantities in a timely manner in the territory of any Party. The CAFTA-DR Agreement provides that this list may be modified pursuant to Article 3.25(4)-(5), when the President of the United States determines that a fabric, yarn, or fiber is not available in commercial quantities in a timely manner in the territory of any Party. See Annex 3.25 of the CAFTA-DR Agreement; see also section 203(o)(4)(C) of the CAFTA-DR Implementation Act.

The CAFTA-DR Implementation Act requires the President to establish procedures governing the submission of a request and providing opportunity for interested entities to submit comments and supporting evidence before a commercial availability determination is made. In Presidential Proclamations 7987 and 7996, the President delegated to CITA the authority under section 203(o)(4) of CAFTA-DR Implementation Act for modifying the Annex 3.25 list. On September 15, 2008, CITA published modified procedures it would follow in considering requests to modify the Annex 3.25 list of products determined to be not commercially available in the territory of any Party to CAFTA-DR (Modifications to Procedures for Considering Requests Under the Commercial Availability Provision of the Dominican Republic-Central America-United States Free Trade Agreement, 73 FR 53200) (''procedures'').

On May 15, 2009, the Chairman of CITA received a Request for a

Commercial Availability Determination (''Request'') from Sorini, Samet & Associates (''SS&A'') for Cintas Corporation for certain yarn dyed plaid poplin fabrics. On May 19, 2009, in accordance with CITA's procedures, CITA notified interested parties of the Request, which was posted on the dedicated website for CAFTA-DR Commercial Availability proceedings. In its notification, CITA advised that any Response with an Offer to Supply (''Response'') must be submitted by June 1, 2009, and any Rebuttal Comments to a Response (''Rebuttal'') must be submitted by June 5, 2009. No interested entity submitted a Response to the Request advising CITA of its objection to the Request and its ability to supply the subject product.

In accordance with section 203(o)(4)(C) of the CAFTA-DR Implementation Act, and Section 8(c)(2) of CITA's procedures, as no interested entity submitted a Response objecting to the Request and demonstrating its ability to supply the subject product, CITA has determined to add the specified fabric to the list in Annex 3.25 of the CAFTA-DR Agreement.

The subject product has been added to the list in Annex 3.25 of the CAFTA-DR Agreement in unrestricted quantities. A revised list has been posted on the dedicated website for CAFTA-DR Commercial Availability proceedings.

Specifications: Certain Yarn Dyed Plaid Poplin Fabric

HTSUS: 5513.31
Fiber Content: 64% to 67% polyester; 33% to 36% cotton
Yarn size, warp: Ring spun 49/1 to 53/1 metric: 64% to 67% polyester; 33% to 36% cotton
Yarn size, filling: Ring spun 49/1 to 53/1 metric: 64% to 67% polyester; 33% to 36% cotton
Thread count: 34.5 to 38 ends x 21 to 23 picks per centimeter
Weave type: Plain
Fabric Weight: 127 to 140 grams per square meter
Fabric Width: 156 to 170 centimeters, cuttable
Coloration: Warp stripes, filling yarns dyed multiple colors
Finishing Processes: Moisture management, pre-cure permanent press, 10% mechanical stretch in filling direction

Kim-Bang Nguyen,

Acting Chairman, Committee for the Implementation of Textile Agreements.

[FR Doc. E9–14728 Filed 6–22–09; 8:45 am]

BILLING CODE 3510–DS

COMMITTEE FOR THE IMPLEMENTATION OF TEXTILE AGREEMENTS

Determination Under the Textile and Apparel Commercial Availability Provision of the Dominican Republic-Central America-United States Free Trade Agreement (CAFTA–DR Agreement)

June 18, 2009.

AGENCY: The Committee for the Implementation of Textile Agreements.

ACTION: Determination to add a product in unrestricted quantities to Annex 3.25 of the CAFTA–DR Agreement.

EFFECTIVE DATE: June 23, 2009.

SUMMARY: The Committee for the Implementation of Textile Agreements (''CITA'') has determined that certain cotton stretch woven fabric, as specified below, is not available in commercial quantities in a timely manner in the CAFTA–DR countries. The product will be added to the list in Annex 3.25 of the CAFTA–DR Agreement in unrestricted quantities.

FOR FURTHER INFORMATION CONTACT: Maria Dybczak, Office of Textiles and Apparel, U.S. Department of Commerce, (202) 482–3651.

FOR FURTHER INFORMATION ON-LINE: http://web.ita.doc.gov/tacgi/CaftaReqTrack.nsf. Reference number: 117.2009.05.13.Fabric.AmericanDesign Industries.

SUPPLEMENTARY INFORMATION:

Authority: The CAFTA–DR Agreement; Section 203(o)(4) of the Dominican Republic-Central America-United States Free Trade Agreement Implementation Act (CAFTA–DR Implementation Act), Pub. Law 109–53; the Statement of Administrative Action (SAA), accompanying the CAFTA–DR Implementation Act; and Presidential Proclamations 7987 (February 28, 2006) and 7996 (March 31, 2006).

BACKGROUND:

The CAFTA–DR Agreement provides a list in Annex 3.25 for fabrics, yarns, and fibers that the Parties to the CAFTA–DR Agreement have determined are not available in commercial quantities in a timely manner in the territory of any Party. The CAFTA–DR Agreement provides that this list may be modified pursuant to Article 3.25(4)–(5), when the President of the United States determines that a fabric, yarn, or fiber is not available in commercial quantities in a timely manner in the territory of any Party. See Annex 3.25 of the CAFTA–DR Agreement; see also section 203(o)(4)(C) of the CAFTA–DR Implementation Act.

The CAFTA–DR Implementation Act requires the President to establish procedures governing the submission of a request and providing opportunity for interested entities to submit comments and supporting evidence before a commercial availability determination is made. In Presidential Proclamations 7987 and 7996, the President delegated to CITA the authority under section 203(o)(4) of CAFTA–DR Implementation Act for modifying the Annex 3.25 list. On September 15, 2008, CITA published modified procedures it would follow in considering requests to modify the Annex 3.25 list of products determined to be not commercially available in the territory of any Party to CAFTA–DR (Modifications to Procedures for Considering Requests Under the Commercial Availability Provision of the Dominican Republic-Central America-United States Free Trade Agreement, 73 FR 53200) (''procedures'').

On May 13, 2009, the Chairman of CITA received a Request for a Commercial Availability determination (''Request'') from American Design Industries (''ADI'') for certain cotton stretch woven fabrics. On May 15, 2009, in accordance with CITA's procedures (73 FR 53200, September 15, 2008), CITA notified interested parties of the Request, which was posted on the dedicated website for CAFTA–DR Commercial Availability proceedings. In its notification, CITA advised that any Response with an Offer to Supply (''Response'') must be submitted by May 28, 2009, and any rebuttal to a Response (''Rebuttal'') must be submitted by June 3, 2009. No interested entity submitted a Response to the Request advising CITA of its objection to the Request and its ability to supply the subject product.

In accordance with section 203(o)(4)(C) of the CAFTA–DR Implementation Act, and Section 8(c)(2) of CITA's procedures, as no interested entity submitted a Response objecting to the Request and demonstrating its ability to supply the subject product, CITA has determined to add the specified fabric to the list in Annex 3.25 of the CAFTA–DR Agreement.

The subject product has been added to the list in Annex 3.25 of the CAFTA–DR Agreement in unrestricted quantities. A revised list has been posted on the dedicated website for CAFTA–DR Commercial Availability proceedings.

Specifications: Certain Cotton Stretch Woven Fabric

HTS: 5209.39.0090 and 5209.39.0080
Fiber Content: 96% to 97% cotton/4% to 3% spandex

Average Yarn Number: 38/IMC–40/IMC; 61/IMC
Thread Count: 77 warp ends x 20 filling picks per square centimeter
Weave Type: Stretch Dobby
Weight: 208.17–254.43 grams/m2
Width: 124.46 to 132.08 centimeters
Finish: Piece Dyed
Variance allowance of up to three percent for content, ten percent for yarn size, ten percent for thread count, ten percent for fabric weight, and ten percent for fabric width.

Kim-Bang Nguyen,

Acting Chairman, Committee for the Implementation of Textile Agreements.

[FR Doc. E9–14754 Filed 6–22–09; 8:45 am]

BILLING CODE 3510–DS

DEPARTMENT OF COMMERCE

International Trade Administration

[A–570–945]

Prestressed Concrete Steel Wire Strand From the People's Republic of China: Initiation of Antidumping Duty Investigation

AGENCY: Import Administration, International Trade Administration, Department of Commerce.

DATES: *Effective Date:* June 23, 2009.

FOR FURTHER INFORMATION CONTACT: Alex Villanueva, AD/CVD Operations, Office 9, International Trade Administration, U.S. Department of Commerce, 14th Street and Constitution Avenue, NW., Washington, DC 20230; *telephone:* (202) 482–3208.

SUPPLEMENTARY INFORMATION:

The Petition

On May 27, 2009, the Department of Commerce (''the Department'') received an antidumping duty (''AD'') petition concerning imports of prestressed concrete steel wire strand (''PC strand'') from the People's Republic of China (''PRC'') filed in proper form by American Spring Wire Corp., Insteel Wire Products Company, and Sumiden Wire Products Corp., (collectively, ''Petitioners'').[1] On June 1, 2009, the Department issued a request for additional information and clarification of certain areas of the Petition. Based on the Department's request, Petitioners filed supplements to the Petition on June 4, 2009 (''Supplement to the AD Petition'' and ''Supplement to the AD/CVD Petitions). On June 8, 2009, the Department requested further clarifications of industry support and producers/exporters identified in the Petitions. Based on the Department's request, Petitioners filed supplements to the Petition on June 9, 2009 (''Second Supplement to the AD/CVD Petitions''). On June 12, 2009 the Department again asked for clarification regarding the scope. Based on the Department's request, Petitioners filed an additional supplement to the Petition on June 15, 2009 (''Third Supplement to the AD/CVD Petitions'').

In accordance with section 732(b) of the Tariff Act of 1930, as amended (''the Act''), Petitioners allege that imports of PC strand from the PRC are being, or are likely to be, sold in the United States at less than fair value, within the meaning of section 731 of the Act, and that such imports materially injure, or threaten material injury to, an industry in the United States.

The Department finds that Petitioners filed the Petition on behalf of the domestic industry because Petitioners are interested parties as defined in section 771(9)(C) of the Act, and that they have demonstrated sufficient industry support with respect to the investigation that they are requesting the Department to initiate (see ''Determination of Industry Support for the Petition'' below).

Scope of Investigation

The products covered by this investigation are PC strand from the PRC. For a full description of the scope of the investigation, please see the ''Scope of Investigation'' in Appendix I of this notice.

Comments on Scope of Investigation

During our review of the Petition, we discussed the scope with Petitioners to ensure that it is an accurate reflection of the products for which the domestic industry is seeking relief. Moreover, as discussed in the preamble to the regulations (*Antidumping Duties; Countervailing Duties; Final Rule, 62 FR 27296, 27323* (May 19, 1997)), we are setting aside a period for interested parties to raise issues regarding product coverage. The Department encourages all interested parties to submit such comments by July 6, 2009, twenty calendar days from the signature date of this notice. Comments should be addressed to Import Administration's APO/Dockets Unit, Room 1870, U.S. Department of Commerce, 14th Street and Constitution Avenue, NW., Washington, DC 20230. The period of scope consultations is intended to provide the Department with ample opportunity to consider all comments and to consult with parties prior to the issuance of the preliminary determinations.

Comments on Product Characteristics for Antidumping Duty Questionnaires

We are requesting comments from interested parties regarding the appropriate physical characteristics of PC strand to be reported in response to the Department's antidumping questionnaires. This information will be used to identify the key physical characteristics of the subject merchandise in order to more accurately report the relevant factors and costs of production, as well as to develop appropriate product comparison criteria.

Interested parties may provide any information or comments that they feel are relevant to the development of an accurate listing of physical characteristics. Specifically, they may provide comments as to which characteristics are appropriate to use as (1) general product characteristics and (2) the product comparison criteria. We note that it is not always appropriate to use all product characteristics as product comparison criteria. We base product comparison criteria on meaningful commercial differences among products. In other words, while there may be some physical product characteristics utilized by manufacturers to describe PC strand, it may be that only a select few product characteristics take into account commercially meaningful physical characteristics. In addition, interested parties may comment on the order in which the physical characteristics should be used in product matching. Generally, the Department attempts to list the most important physical characteristics first and the least important characteristics last.

In order to consider the suggestions of interested parties in developing and issuing the antidumping duty questionnaires, we must receive comments at the above-referenced address by July 6, 2009. Additionally, rebuttal comments must be received by July 13, 2009.

Determination of Industry Support for the Petition

Section 732(b)(1) of the Act requires that a petition be filed on behalf of the domestic industry. Section 732(c)(4)(A) of the Act provides that a petition meets this requirement if the domestic producers or workers who support the petition account for: (i) At least 25 percent of the total production of the domestic like product; and (ii) more than 50 percent of the production of the domestic like product produced by that portion of the industry expressing support for, or opposition to, the

[1] *See* Petitions for the Imposition of Antidumping and Countervailing Duties: Prestressed Concrete Steel Wire Strand From the People's Republic of China, dated May 27, 2009 (the Petition).

petition. Moreover, section 732(c)(4)(D) of the Act provides that, if the petition does not establish support of domestic producers or workers accounting for more than 50 percent of the total production of the domestic like product, the Department shall: (i) Poll the industry or rely on other information in order to determine if there is support for the petition, as required by subparagraph (A), or (ii) determine industry support using a statistically valid sampling method to poll the industry.

Section 771(4)(A) of the Act defines the ''industry'' as the producers as a whole of a domestic like product. Thus, to determine whether a petition has the requisite industry support, the statute directs the Department to look to producers and workers who produce the domestic like product. The International Trade Commission (''ITC''), which is responsible for determining whether ''the domestic industry'' has been injured, must also determine what constitutes a domestic like product in order to define the industry. While both the Department and the ITC must apply the same statutory definition regarding the domestic like product (See section 771(10) of the Act), they do so for different purposes and pursuant to a separate and distinct authority. In addition, the Department's determination is subject to limitations of time and information. Although this may result in different definitions of the like product, such differences do not render the decision of either agency contrary to law.[2]

Section 771(10) of the Act defines the domestic like product as ''a product which is like, or in the absence of like, most similar in characteristics and uses with, the article subject to an investigation under this subtitle.'' Thus, the reference point from which the domestic like product analysis begins is ''the article subject to an investigation,'' (*i.e.,* the class or kind of merchandise to be investigated, which normally will be the scope as defined in the petition).

With regard to the domestic like product, Petitioners do not offer a definition of domestic like product distinct from the scope of the investigation. Based on our analysis of the information submitted on the record, we have determined that PC strand constitutes a single domestic like product and we have analyzed industry support in terms of that domestic like product.[3]

In determining whether Petitioners have standing under section 732(c)(4)(A), we considered the industry support data contained in the Petition with reference to the domestic like product as defined in the ''Scope of Investigation'' section above. To establish industry support, Petitioners provided their production of the domestic like product for the year 2008, and compared this to total production of the domestic like product for the entire domestic industry.[4] Petitioners calculated total domestic production based on their own production plus information provided by the two other non-petitioning companies that produce the domestic like product in the United States, who are supporters of the Petition.[5]

Our review of the data provided in the Petition, supplemental submissions, and other information readily available to the Department indicates that Petitioners have established industry support. First, the Petition established support from domestic producers (or workers) accounting for more than 50 percent of the total production of the domestic like product and, as such, the Department is not required to take further action in order to evaluate industry support (*e.g.,* polling).[6] Second, the domestic producers (or workers) have met the statutory criteria for industry support under section 732(c)(4)(A)(i) of the Act because the domestic producers (or workers) who support the Petitions account for at least 25 percent of the total production of the domestic like product.[7] Finally, the domestic producers (or workers) have met the statutory criteria for industry support under section 732(c)(4)(A)(ii) of the Act because the domestic producers (or workers) who support the Petition account for more than 50 percent of the production of the domestic like product produced by that portion of the industry expressing support for, or opposition to, the Petition. Accordingly, the Department determines that the Petition was filed on behalf of the domestic industry within the meaning of section 732(b)(1) of the Act.[8]

The Department finds that Petitioners filed the Petition on behalf of the domestic industry because they are interested parties as defined in section 771(9)(C) of the Act and they have demonstrated sufficient industry support with respect to the antidumping investigation that they are requesting the Department initiate.[9]

Allegations and Evidence of Material Injury and Causation

Petitioners allege that the U.S. industry producing the domestic like product is being materially injured, or is threatened with material injury, by reason of the imports of the subject merchandise sold at less than normal value (''NV''). In addition, Petitioners allege that subject imports exceed the negligibility threshold provided for under section 771(24)(A) of the Act.

Petitioners contend that the industry's injured condition is illustrated by reduced market share, increased import penetration, underselling and price depressing and suppressing effects, lost sales and revenue, reduced production, capacity, and capacity utilization, reduced employment, and an overall decline in financial performance. We have assessed the allegations and supporting evidence regarding material injury, threat of material injury, and causation, and we have determined that these allegations are properly supported by adequate evidence and meet the statutory requirements for initiation.[10]

Period of Investigation

In accordance with 19 CFR 351.204(b)(1), because this Petition was filed on May 27, 2009, the anticipated period of investigation (''POI'') is October 1, 2008, through March 31, 2009.

Allegations of Sales at Less Than Fair Value

The following is a description of the allegations of sales at less than fair value upon which the Department has based its decision to initiate an investigation with respect to the PRC. The sources of data for the deductions and adjustments relating to U.S. price and normal value (''NV'') are discussed in the Initiation Checklist. Should the need arise to use any of this information as facts available under section 776 of the Act, we may

[2] *See USEC, Inc.* v. *United States,* 132 F. Supp. 2d 1, 8 (CIT 2001), citing *Algoma Steel Corp. Ltd.* v. *United States,* 688 F. Supp. 639, 644 (CIT 1988), *aff'd* 865 F.2d 240 (Fed. Cir. 1989), *cert. denied* 492 U.S. 919 (1989).

[3] For a discussion of the domestic like product analysis in this case, *see* Antidumping Duty Investigation Initiation Checklist: PC Strand from the PRC (''Initiation Checklist'') at Attachment II (''Industry Support''), dated concurrently with this notice and on file in the Central Records Unit (''CRU''), Room 1117 of the main Department of Commerce building.

[4] *See* Volume I of the Petition, at 4, and Exhibit General-1.

[5] *See* Volume I of the Petition, at Exhibit General-1, and Supplement to the AD/CVD Petitions, at 5–6, and Attachment 3, and Second Supplement to the AD/CVD Petitions, at 5, and Attachment 1; *see also* Initiation Checklist as Attachment II, Industry Support.

[6] *See* Section 732(c)(4)(D) of the Act, and Initiation Checklist at Attachment 2.

[7] *See* Initiation Checklist at Attachment II.

[8] *See id.*

[9] *See id.*

[10] *See* Initiation Checklist at Attachment 3.

reexamine the information and revise the margin calculations, if appropriate.

Export Price

Petitioners calculated export prices (''EPs'') for PC strand of various diameters: ⅜″ diameter, ½″ diameter and 0.6″ diameter. These were based on price quotes obtained through offers of sale. Petitioner presented affidavits for the offers for sale attesting that the offers were made during the POI.[11]

To calculate the net U.S. EP, Petitioners deducted from the starting U.S. prices ocean freight and insurance charges, U.S. port fees, foreign brokerage and, as appropriate, a re-seller mark-up. U.S. inland freight costs were also deducted when such information was available. We have not made any additional deductions.

Petitioners calculated per-unit ocean freight and insurance using import statistics reported by the U.S. International Trade Commission Dataweb. As for U.S. port fees, Petitioners included the 0.21 percent ad valorem harbor maintenance fee as well as the 0.125 percent merchandise processing fee. Foreign brokerage was calculated using the Department's methodology in *Certain Kitchen Appliance Shelving and Racks from the People's Republic of China* and then converted to the appropriate unit.[12] Petitioners calculated re-seller mark-ups based on industry knowledge, choosing a lower value in order to produce a conservative estimate. Lastly, U.S. inland freight was calculated based on Petitioners' experience delivering PC strand inside the United States and the number of miles from the closest U.S. port to the location of the U.S. customer.[13]

Normal Value

Petitioners state that in every previous less-than-fair value investigation involving merchandise from the PRC, the Department has concluded that the PRC is a non-market economy country (''NME'') and, as the Department has not revoked this determination, its NME status remains in effect today.[14] The Department has previously examined the PRC's market status and determined that NME status should continue for the PRC.[15] In addition, in recent antidumping duty investigations, the Department has continued to determine that the PRC is an NME country.[16]

In accordance with section 771(18)(C)(i) of the Act, the presumption of NME status remains in effect until revoked by the Department. The presumption of NME status for the PRC has not been revoked by the Department and, therefore, remains in effect for purposes of the initiation of this investigation. Accordingly, the NV of the product is appropriately based on factors of production valued in a surrogate market economy country, in accordance with section 773(c) of the Act. In the course of this investigation, all parties will have the opportunity to provide relevant information related to the issues of the PRC's NME status and the granting of separate rates to individual exporters.

Petitioners argue that India is the appropriate surrogate country for the PRC because it is at a comparable level of economic development and it has two major producers of PC strand.[17] Petitioners state that the Department has determined in previous antidumping duty investigations and administrative reviews that India is at a level of development comparable to the PRC.[18] Petitioners also assert that there are two major producers of the subject merchandise in India, the Tata Steel Group and the Usha Martin Group.[19]

Based on the information provided by Petitioners, the Department believes that the use of India as a surrogate country is appropriate for purposes of initiation. However, after initiation of the investigation, interested parties will have the opportunity to submit comments regarding surrogate country selection and, pursuant to 19 CFR 351.301(c)(3)(i), will be provided an opportunity to submit publicly available information to value factors of production within 40 days after the date of publication of the preliminary determination.

Petitioners provided dumping margin calculations using the Department's NME methodology as required by 19 CFR 351.202(b)(7)(i)(C) and 19 CFR 351.408. Petitioners calculated three NVs for PC strand, including diameters of ⅜″, ½″, and 0.6″.

Petitioners valued the factors of production using reasonably available, public surrogate country data, including India import data from the Monthly Statistics of the Foreign Trade of India (''MSFTI'') as compiled by the World Trade Atlas (WTA) from the period May 2008 through October 2008, the most current data available, information regarding labor costs on the Department's Web site, the *International Energy Agency Statistics,* and information from the 2007/2008 unconsolidated financial reports of the Tata Steel Group and the Usha Martin Group.[20] To calculate the consumption rates, the Petitioners used the consumption rates for U.S. producers during the POI.[21]

Petitioners state that they valued hot-rolled, high-carbon steel wire rod using the WTA data, which was then converted to the appropriate unit.[22] Petitioners valued electricity using Indian electricity rates disseminated by the *International Energy Agency.*[23] Petitioners valued labor using the wage rate data published on the Department's Web site, at *http://ia.ita.doc.gov*.[24] Petitioners valued natural gas according to Indian import data compiled by the WTA.[25]

Where Petitioners were unable to find input prices contemporaneous with the POI, Petitioners adjusted for inflation using the wholesale price index for India, as published by the International Monetary Fund.[26] Petitioners used exchange rates, as reported by the Federal Reserve, to convert Indian Rupees to U.S. Dollars.[27]

Petitioners based factory overhead, selling, general and administrative expenses (''SG&A''), and profit, on the financial ratios of the Tata Steel Group and the Usha Martin Group as both companies are significant producers of

[11] *See* Initiation Checklist for further discussion.

[12] *See* Memorandum from Katie Marksberry to The File, regarding Investigation of Certain Kitchen Appliance Shelving and Racks from the People's Republic of China: Surrogate Value Determination, dated February 26, 2009, at 17.

[13] *See* Initiation Checklist for further discussion.

[14] *See* Volume II–A of the Petition, at 47.

[15] *See* Memorandum from the Office of Policy to David M. Spooner, Assistant Secretary for Import Administration, regarding The People's Republic of China Status as a Non-Market Economy, dated May 15, 2006. This document is available online at *http://ia.ita.doc.gov/download/prc-nme-status/prc-nme-status-memo.pdf.*

[16] *See Certain Circular Welded Carbon Quality Steel Line Pipe from the People's Republic of China: Final Determination of Sales at Less Than Fair Value,* 74 FR 14514 (March 31, 2009); *Frontseating Service Valves from the People's Republic of China: Final Determination of Sales at Less Than Fair Value and Final Negative Determination of Critical Circumstances,* 74 FR 10886 (March 13, 2009); *1–Hydroxyethylidene-1, 1–Diphosphonic Acid From the People's Republic of China: Final Determination of Sales at Less Than Fair Value,* 74 FR 10545 (March 11, 2009).

[17] *See* Volume II–A of the Petition, at 47–49.

[18] *See id.*

[19] *See id.*

[20] *See* Volume II–A of the Petition, at 51–54.

[21] *See* Volume II–A of the Petition, at 49–50, and Exhibit AD–6.

[22] *See* Volume II–A of the Petition, at 52, and Supplement to the AD Petition, at 5.

[23] *See* Volume II–A of the Petition, at 53, and Exhibit AD–7.

[24] *See* Volume II–A of the Petition, at 52, and Exhibits AD–6 and AD–7.

[25] *See* Volume II–A of the Petition, at 53, and Exhibit AD–7.

[26] *See* Volume II–A of the Petition, at 51, and Exhibit AD–7.

[27] *See id.*

PC strand.[28] The ratios were obtained from each respective company's 2007/2008 unconsolidated financial reports and then averaged together.[29]

Fair-Value Comparisons

Based on the data provided by Petitioners, there is reason to believe that imports of PC strand from the PRC are being, or are likely to be, sold in the United States at less than fair value. Based on comparisons of EP to NV as revised above, the estimated dumping margins for the PRC range from 140.16 percent to 314.59 percent.[30]

Initiation of Antidumping Investigation

Based upon the examination of the Petition concerning PC strand from the PRC and other information reasonably available to the Department, the Department finds that the Petition meets the requirements of section 732 of the Act. Therefore, we are initiating an antidumping duty investigation to determine whether imports of PC strand from the PRC are being, or are likely to be, sold in the United States at less than fair value. In accordance with section 733(b)(1)(A) of the Act, unless postponed, we will make our preliminary determinations no later than 140 days after the date of this initiation.

Targeted-Dumping Allegations

On December 10, 2008, the Department issued an interim final rule for the purpose of withdrawing 19 CFR 351.414(f) and (g), the regulatory provisions governing the targeted-dumping analysis in antidumping duty investigations, and the corresponding regulation governing the deadline for targeted-dumping allegations, 19 CFR 351.301(d)(5).[31] The Department stated that ''{w}ithdrawal will allow the Department to exercise the discretion intended by the statute and, thereby, develop a practice that will allow interested parties to pursue all statutory avenues of relief in this area.'' [32]

In order to accomplish this objective, if any interested party wishes to make a targeted-dumping allegation in this investigation pursuant to section 777A(d)(1)(B) of the Act, such allegation is due no later than 45 days before the scheduled date of the preliminary determination.

Respondent Selection

The Department will request quantity and value information from the exporters and producers identified in the Petition with complete contact information. The quantity and value data received from NME exporters/producers will be used as the basis to select the mandatory respondents.

The Department requires that the respondents submit a response to both the quantity and value questionnaire and the separate-rate application by the respective deadlines in order to receive consideration for separate-rate status.[33] Appendix II of this notice contains the quantity and value questionnaire that must be submitted by all NME exporters/producers no later than July 7, 2009. In addition, the Department will post the quantity and value questionnaire along with the filing instructions on the Department's Web site, at *http://ia.ita.doc.gov/ia-highlights-and-news.html.*

Separate Rates

In order to obtain separate-rate status in an NME investigation, exporters and producers must submit a separate-rate status application.[34] The specific requirements for submitting the separate-rate application in this investigation are outlined in detail in the application itself, available on the Department's Web site at *http://ia.ita.doc.gov/ia-highlights-and-news.html* on the date of publication of this initiation notice in the **Federal Register.** The separate-rate application will be due sixty (60) days from the date of publication of this initiation notice in the **Federal Register**.

Use of Combination Rates in an NME Investigation

The Department will calculate combination rates for certain respondents that are eligible for a separate rate in this investigation. The Separate Rates/Combination Rates Bulletin states:

{w}hile continuing the practice of assigning separate rates only to exporters, all separate rates that the Department will now assign in its NME investigations will be specific to those producers that supplied the exporter during the period of investigation. Note, however, that one rate is calculated for the exporter and all of the producers which supplied subject merchandise to it during the period of investigation. This practice applies both to mandatory respondents receiving an individually calculated separate rate as well as the pool of non-investigated firms receiving the weighted-average of the individually calculated rates. This practice is referred to as the application of combination rates because such rates apply to specific combinations of exporters and one or more producers. The cash-deposit rate assigned to an exporter will apply only to merchandise both exported by the firm in question and produced by a firm that supplied the exporter during the period of investigation.[35]

Distribution of Copies of the Petition

In accordance with section 732(b)(3)(A) of the Act and 19 CFR 351.202(f), a copy of the public version of the Petition has been provided to the representatives of the Government of the PRC. Because of the particularly large number of producers/exporters identified in the Petition, the Department considers the service of the public version of the Petition to the foreign producers/exporters satisfied by the delivery of the public version to the Government of the PRC, consistent with 19 CFR 351.203(c)(2).

ITC Notification

We have notified the ITC of our initiation, as required by section 732(d) of the Act.

Preliminary Determination by the International Trade Commission

The ITC will preliminarily determine, no later than July 13, 2009,[36] whether there is a reasonable indication that imports of PC strand from the PRC materially injure, or threaten material injury to, a U.S. industry. A negative ITC determination covering all classes or kinds of merchandise covered by the Petition would result in the investigation being terminated. Otherwise, this investigation will proceed according to statutory and regulatory time limits.

This notice is issued and published pursuant to section 777(i) of the Act.

[28] *See* Volume II–A of the Petition, at 48–49; *see also* Supplement to the AD Petition, dated June 4, 2009, at 2–5.

[29] *See* Volume II–A of the Petition, at 53–54, and Exhibit AD–8; *see also* Supplement to the AD Petition, dated June 4, 2009, at 6.

[30] *See* Supplement to the AD Petition, at Exhibit Supp. AD–1.

[31] *See Withdrawal of the Regulatory Provisions Governing Targeted Dumping in Antidumping Duty Investigations*, 73 FR 74930 (December 10, 2008).

[32] *Id.* at 74931.

[33] *See Circular Welded Austenitic Stainless Pressure Pipe from the People's Republic of China: Initiation of Antidumping Duty Investigation*, 73 FR 10221, 10225 (February 26, 2008); and *Initiation of Antidumping Duty Investigation: Certain Artist Canvas From the People's Republic of China*, 70 FR 21996, 21999 (April 28, 2005).

[34] *See Certain Circular Welded Carbon Quality Steel Line Pipe from the Republic of Korea and the People's Republic of China: Initiation of Antidumping Duty Investigations*, 73 FR 23188, 23193 (April 29, 2008). (''*Certain Circular Welded Carbon Quality Steel Line Pipe from the PRC*'').

[35] *See* Import Administration Policy Bulletin, Number: 05.1, ''Separate-Rates Practice and Application of Combination Rates in Antidumping Investigations involving Non-Market Economy Countries,'' dated April 5, 2005, available on the Department's Web site at *http://ia.ita.doc.gov/policy/bull05-1.pdf*; *See also Certain Circular Welded Carbon Quality Steel Line Pipe from the PRC*, 73 FR 23188, 23193.

[36] Where the deadline falls on a weekend/holiday, the appropriate date is the next business day.

Dated: June 16, 2009.

Ronald K. Lorentzen,

Acting Assistant Secretary for Import Administration.

Appendix I

Scope of the Investigation

For purposes of this investigation, prestressed concrete steel wire strand (PC strand) is steel wire strand, other than of stainless steel, which is suitable for use in, but not limited to, prestressed concrete (both pretensioned and post-tensioned) applications. The scope of this investigation encompasses all types and diameters of PC strand whether uncoated (uncovered) or coated (covered) by any substance, including but not limited to, grease, plastic sheath, or epoxy. This merchandise includes, but is not limited to, PC strand produced to the American Society for Testing and Materials (ASTM) A–416 specification, or comparable domestic or foreign specifications. PC strand made from galvanized wire is excluded from the scope if the zinc and/or zinc oxide coating meets or exceeds the 0.40 oz./ft^2; standard set forth in ASTM–A–475.

The PC strand subject to this investigation is currently classifiable under subheadings 7312.10.3010 and 7312.10.3012 of the Harmonized Tariff Schedule of the United States (HTSUS). Although the HTSUS subheadings are provided for convenience and customs purposes, the written description of the scope of this investigation is dispositive.

Appendix II

Where it is not practicable to examine all known exporters/producers of subject merchandise, section 777A(c)(2) of the Tariff Act of 1930, as amended, permits us to investigate (1) a sample of exporters, producers, or types of products that is statistically valid based on the information available at the time of selection, or (2) exporters and producers accounting for the largest volume of the subject merchandise that can reasonably be examined.

In the chart below, please provide the total quantity and total value of all your sales of merchandise covered by the scope of this investigation (*see* ''Scope of Investigation'' section of this notice), produced in the PRC, and exported/shipped to the United States during the period October 1, 2008, through March 31, 2009.

Market	Total quantity in kilograms	Terms of sale	Total value in U.S. dollars
United States:			
1. Export Price Sales			
2. a. Exporter Name			
b. Address			
c. Contact			
d. Phone No.			
e. Fax No.			
3. Constructed Export Price Sales			
4. Further Manufactured			
Total Sales			

Total Quantity:

• Please report quantity on a kilograms basis. If any conversions were used, please provide the conversion formula and source.

Terms of Sales:

• Please report all sales on the same terms (*e.g.*, free on board at port of export).

Total Value:

• All sales values should be reported in U.S. dollars. Please indicate any exchange rates used and their respective dates and sources.

Export Price Sales:

• Generally, a U.S. sale is classified as an export price sale when the first sale to an unaffiliated customer occurs before importation into the United States.

• Please include any sales exported by your company directly to the United States.

• Please include any sales exported by your company to a third-country market economy reseller where you had knowledge that the merchandise was destined to be resold to the United States.

• If you are a producer of subject merchandise, please include any sales manufactured by your company that were subsequently exported by an affiliated exporter to the United States.

• Please do not include any sales of subject merchandise manufactured in Hong Kong in your figures.

Constructed Export Price Sales:

• Generally, a U.S. sale is classified as a constructed export price sale when the first sale to an unaffiliated customer occurs after importation. However, if the first sale to the unaffiliated customer is made by a person in the United States affiliated with the foreign exporter, constructed export price applies even if the sale occurs prior to importation.

• Please include any sales exported by your company directly to the United States.

• Please include any sales exported by your company to a third-country market economy reseller where you had knowledge that the merchandise was destined to be resold to the United States.

• If you are a producer of subject merchandise, please include any sales manufactured by your company that were subsequently exported by an affiliated exporter to the United States.

• Please do not include any sales of subject merchandise manufactured in Hong Kong in your figures.

Further Manufactured:

• Sales of further manufactured or assembled (including re-packaged) merchandise is merchandise that undergoes further manufacture or assembly in the United States before being sold to the first unaffiliated customer.

• Further manufacture or assembly costs include amounts incurred for direct materials, labor and overhead, plus amounts for general and administrative expense, interest expense, and additional packing expense incurred in the country of further manufacture, as well as all costs involved in moving the product from the U.S. port of entry to the further manufacturer.

[FR Doc. E9–14721 Filed 6–22–09; 8:45 am]

BILLING CODE 3510–DS–P

DEPARTMENT OF COMMERCE

International Trade Administration

[A–570–822]

Certain Helical Spring Lock Washers from the People's Republic of China: Extension of Time Limit for the Preliminary Results of the 2007–2008 Antidumping Duty Administrative Review

AGENCY: Import Administration, International Trade Administration, Department of Commerce

EFFECTIVE DATE: June 23, 2009.

FOR FURTHER INFORMATION CONTACT: Shelly Atkinson or Brandon Farlander, AD/CVD Operations, Office 1, Import Administration, International Trade Administration, U.S. Department of Commerce, 14th Street and Constitution Avenue, NW, Washington DC 20230; telephone (202) 482–0116 or (202)482–0182, respectively.

SUPPLEMENTARY INFORMATION:

Background

On November 24, 2008, the Department of Commerce (''the Department'') published a notice of initiation of an administrative review of the antidumping duty order on certain helical spring lock washers from the People's Republic of China covering the period October 1, 2007, through September 30, 2008. *See Initiation of Antidumping and Countervailing Duty Administrative Reviews*, 73 FR 70964 (November 24, 2008). The preliminary results for this administrative review are currently due no later than July 3, 2009.

Extension of Time Limits for Preliminary Results

Section 751(a)(3)(A) of the Tariff Act of 1930, as amended (''the Act''), requires the Department to issue the preliminary results of an administrative review within 245 days after the last day of the anniversary month of an antidumping duty order for which a review is requested and issue the final results within 120 days after the date on which the preliminary results are published. However, if it is not practicable to complete the review within the time period, section 751(a)(3)(A) of the Act allows the Department to extend these deadlines to a maximum of 365 days and 180 days, respectively.

Because the Department is analyzing the questionnaire response and will issue a supplemental questionnaire shortly, it is not practicable to complete the preliminary results of this review within the original time limit (*i.e.*, July 3, 2009). Therefore, the Department is extending the time limit for completion of the preliminary results to no later than November 2, 2009,[1] in accordance with section 751(a)(3)(A) of the Act.

We are issuing and publishing this notice in accordance with sections 751(a)(3)(A) and 777(i)(1) of the Act.

Dated: June 12, 2009.

John M. Andersen,

Acting Deputy Assistant Secretary for Antidumping and Countervailing Duty Operations.

[FR Doc. E9–14730 Filed 6–22–09; 8:45 am]

BILLING CODE 3510–DS–S

[1] 120 days from July 3, 2009, is October 31, 2009. However, Department practice dictates that where a deadline falls on a weekend, the appropriate deadline is the next business day. *See Notice of Clarification: Application of ''Next Business Day'' Rule for Administrative Determination Deadlines Pursuant to the Tariff Act of 1930, As Amended*, 70 FR 24533 (May 10, 2005).

DEPARTMENT OF COMMERCE

International Trade Administration

[C–570–946]

Prestressed Concrete Steel Wire Strand From the People's Republic of China: Initiation of Countervailing Duty Investigation

AGENCY: Import Administration, International Trade Administration, Department of Commerce.

DATES: *Effective Date:* June 16, 2009.

FOR FURTHER INFORMATION CONTACT: Robert Copyak, AD/CVD Operations, Office 3, Import Administration, International Trade Administration, U.S. Department of Commerce, 14th Street and Constitution Avenue, NW., Room 4014, Washington, DC 20230; telephone: (202) 482–2209.

SUPPLEMENTARY INFORMATION:

The Petition

On May 27, 2009, the Department of Commerce (''Department'') received a petition filed in proper form by American Spring Wire Corp., Insteel Wire Products Company, and Sumiden Wire Products Corp (collectively, ''Petitioners''), domestic producers of prestressed concrete steel wire strand (''PC Strand''). On June 1, 2009, the Department issued a request for additional information and clarification of certain areas of the Petition. Based on the Department's request, Petitioners filed supplements to the Petition on June 4, 2009 (''Supplement to the AD Petition'' and ''Supplement to the AD/CVD Petitions''). On June 4, 2009, the Department requested further clarification of Petitioners' subsidy allegations. Based on the Department's request, Petitioners filed supplements to the countervailing duty (''CVD'') petition on June 11, 2009 (''Supplement to the CVD Petition''). On June 8, 2009, the Department requested further clarifications of industry support and producers/exporters identified in the Petitions. Based on the Department's request, Petitioners filed supplements to the Petition on June 9, 2009 (''Second Supplement to the AD/CVD Petitions''). On June 12, 2009 the Department again asked for clarification regarding the scope. Based on the Department's request, Petitioners filed an additional supplement to the Petition on June 15, 2009 (''Third Supplement to the AD/CVD Petitions'').

In accordance with section 702(b)(1) of the Tariff Act of 1930, as amended (''the Act''), Petitioners allege that manufacturers, producers, or exporters of PC Strand in the People's Republic of China (''PRC'') receive countervailable subsidies within the meaning of section 701 of the Act, and that such imports are materially injuring, or threatening material injury to, an industry in the United States.

The Department finds that Petitioners filed the Petition on behalf of the domestic industry because they are interested parties as defined in section 771(9)(C) of the Act, and Petitioners have demonstrated sufficient industry support with respect to the CVD investigation (*see* ''Determination of Industry Support for the Petition'' section below).

Period of Investigation

The period of investigation is January 1, 2008, through December 31, 2008.

Scope of Investigation

The products covered by this investigation are PC Strand from the PRC. For a full description of the scope of the investigation, please see the ''Scope of the Investigation'' in Appendix I of this notice.

Comments on Scope of Investigation

During our review of the Petition, we discussed the scope with Petitioners to ensure that it is an accurate reflection of the products for which the domestic industry is seeking relief. Moreover, as discussed in the preamble to the regulations (*Antidumping Duties; Countervailing Duties; Final Rule,* 62 FR 27296, 27323 (May 19, 1997)), we are setting aside a period for interested parties to raise issues regarding product coverage. The Department encourages all interested parties to submit such comments by July 6, 2009, twenty calendar days from the signature date of this notice. Comments should be addressed to Import Administration's APO/Dockets Unit, Room 1870, U.S. Department of Commerce, 14th Street and Constitution Avenue, NW., Washington, DC 20230. The period of scope consultations is intended to provide the Department with ample opportunity to consider all comments and to consult with parties prior to the issuance of the preliminary determinations.

Consultations

Pursuant to section 702(b)(4)(A)(ii) of the Act, the Department invited representatives of the Government of the PRC for consultations with respect to the CVD Petition. The Department held these consultations in Washington, DC, on June 1, 2009. *See* the Memorandum from Dana S. Mermelstein to the Files, entitled, ''Countervailing Duty Petitions on Pre-Stressed Concrete Steel Wire

Strand and Certain Grating from the People's Republic of China: Consultations with the Government of the People's Republic of China,'' (June 3, 2009), which is on file in the Central Records Unit (''CRU'') of the main Department of Commerce building, Room 1117.

Determination of Industry Support for the Petition

Section 702(b)(1) of the Act requires that a petition be filed on behalf of the domestic industry. Section 702(c)(4)(A) of the Act provides that a petition meets this requirement if the domestic producers or workers who support the petition account for: (i) At least 25 percent of the total production of the domestic like product; and (ii) more than 50 percent of the production of the domestic like product produced by that portion of the industry expressing support for, or opposition to, the petition. Moreover, section 702(c)(4)(D) of the Act provides that, if the petition does not establish support of domestic producers or workers accounting for more than 50 percent of the total production of the domestic like product, the Department shall: (i) Poll the industry or rely on other information in order to determine if there is support for the petition, as required by subparagraph (A); or (ii) determine industry support using a statistically valid sampling method.

Section 771(4)(A) of the Act defines the ''industry'' as the producers as a whole of a domestic like product. Thus, to determine whether a petition has the requisite industry support, the statute directs the Department to look to producers and workers who produce the domestic like product. The U.S. International Trade Commission (''ITC''), which is responsible for determining whether ''the domestic industry'' has been injured, must also determine what constitutes a domestic like product in order to define the industry. While both the Department and the ITC must apply the same statutory definition regarding the domestic like product (section 771(10) of the Act), they do so for different purposes and pursuant to a separate and distinct authority. In addition, the Department's determination is subject to limitations of time and information. Although this may result in different definitions of the like product, such differences do not render the decision of either agency contrary to law. *See USEC, Inc.* v. *United States,* 132 F. Supp. 2d 1, 8 (CIT 2001), citing *Algoma Steel Corp. Ltd.* v. *United States,* 688 F. Supp. 639, 644 (CIT 1988), *aff'd* 865 F.2d 240 (Fed. Cir. 1989), *cert. denied* 492 U.S. 919 (1989).

Section 771(10) of the Act defines the domestic like product as ''a product which is like, or in the absence of like, most similar in characteristics and uses with, the article subject to an investigation under this subtitle.'' Thus, the reference point from which the domestic like product analysis begins is ''the article subject to an investigation'' (*i.e.,* the class or kind of merchandise to be investigated, which normally will be the scope as defined in the petition).

With regard to the domestic like product, Petitioners do not offer a definition of domestic like product distinct from the scope of the investigation. Based on our analysis of the information submitted on the record, we have determined that PC strand constitutes a single domestic like product and we have analyzed industry support in terms of that domestic like product. For a discussion of the domestic like product analysis in this case, *see* Countervailing Duty Investigation Initiation Checklist: PC Strand from the PRC (''Initiation Checklist'') at Attachment II (''Industry Support''), dated concurrently with this notice and on file in the Central Records Unit (''CRU''), Room 1117 of the main Department of Commerce building.

In determining whether Petitioners have standing, under section 702(c)(4)(A) of the Act, we considered the industry support data contained in the Petition with reference to the domestic like product as defined in the ''Scope of Investigation'' section above. To establish industry support, Petitioners provided their production of the domestic like product for the year 2008, and compared this to total production of the domestic like product for the entire domestic industry. *See* Volume I of the Petition, at 4, and Exhibit General-1. Petitioners calculated total domestic production based on their own production plus information provided by the two other non-petitioning companies that produce the domestic like product in the United States, who are supporters of the Petition. *See* Volume I of the Petition, at Exhibit General-1, and Supplement to the AD/CVD Petitions, at 5–6, and Attachment 3, and Second Supplement to the AD/CVD Petitions, dated June 9, 2009, at 5, and Attachment 1; *see also* Initiation Checklist as Attachment II, Industry Support.

Our review of the data provided in the Petition, supplemental submissions, and other information readily available to the Department indicates that Petitioners have established industry support. First, the Petition established support from domestic producers (or workers) accounting for more than 50 percent of the total production of the domestic like product and, as such, the Department is not required to take further action in order to evaluate industry support (*e.g.,* polling). *See* section 702(c)(4)(D) of the Act and Initiation Checklist at Attachment II. Second, the domestic producers (or workers) have met the statutory criteria for industry support under section 702(c)(4)(A)(i) of the Act because the domestic producers (or workers) who support the Petitions account for at least 25 percent of the total production of the domestic like product. *See* Initiation Checklist at Attachment II. Finally, the domestic producers (or workers) have met the statutory criteria for industry support under section 702(c)(4)(A)(ii) of the Act because the domestic producers (or workers) who support the Petition account for more than 50 percent of the production of the domestic like product produced by that portion of the industry expressing support for, or opposition to, the Petition. Accordingly, the Department determines that the Petition was filed on behalf of the domestic industry within the meaning of section 702(b)(1) of the Act. *See id.*

The Department finds that Petitioners filed the Petition on behalf of the domestic industry because they are interested parties as defined in section 771(9)(C) of the Act and they have demonstrated sufficient industry support with respect to the antidumping investigation that they are requesting the Department initiate. *See id.*

Allegations and Evidence of Material Injury and Causation

Petitioners allege that imports of PC strand from the PRC are benefitting from countervailable subsidies and that such imports are causing or threaten to cause, material injury to the domestic industries producing PC strand. In addition, Petitioners allege that subsidized imports exceed the negligibility threshold provided for under section 771(24)(A) of the Act.

Petitioners contend that the industry's injured condition is illustrated by reduced market share, increased import penetration, underselling and price depressing and suppressing effects, lost sales and revenue, reduced production, capacity, and capacity utilization, reduced employment, and an overall decline in financial performance. We have assessed the allegations and supporting evidence regarding material injury, threat of material injury, and causation, and we have determined that these allegations are properly supported by adequate evidence and meet the

statutory requirements for initiation. *See* Initiation Checklist at Attachment III (Analysis of Allegations and Evidence of Material Injury and Causation for the Petition).

Initiation of Countervailing Duty Investigation

Section 702(b) of the Act requires the Department to initiate a CVD proceeding whenever an interested party files a petition on behalf of an industry that: (1) Alleges the elements necessary for an imposition of a duty under section 701(a) of the Act; and (2) is accompanied by information reasonably available to the petitioner(s) supporting the allegations.

The Department has examined the CVD Petition on PC Strand from the PRC and finds that it complies with the requirements of section 702(b) of the Act. Therefore, in accordance with section 702(b) of the Act, we are initiating a CVD investigation to determine whether manufacturers, producers, or exporters of PC Strand in the PRC receive countervailable subsidies. For a discussion of evidence supporting our initiation determination, *see* Initiation Checklist.

We are including in our investigation the following programs alleged in the petition to have provided countervailable subsidies to producers and exporters of the subject merchandise in the PRC:

A. Loan Programs

1. Policy Lending at the Federal Level to PC Strand Industry.
2. Policy Lending at the Provincial and Municipal Level.
3. Preferential Loans for State-Owned Enterprises.
4. Treasury Bond Loans.
5. Honorable Enterprises Program.
6. Preferential Loans for Key Projects and Technologies.

B. Government Provision of Goods and Services for Less Than Adequate Remuneration (LTAR)

1. Government Provision of Wire Rod for LTAR.
2. Provision of Land Use Rights for LTAR to Foreign Invested Enterprises (''FIEs'') in Jiangxi and the City of Xinyu.
3. Federal Provision of Electricity for LTAR.
4. Provision of Electricity and Water at LTAR for FIEs and ''Technologically Advanced'' Enterprises by Jiangsu Province.

C. Income and Other Direct Taxes

1. Income Tax Credits for Domestically Owned Companies Purchasing Domestically Produced Equipment.
2. Income Tax Exemption for Investment in Domestic Technological Renovation.
3. Reduction in or exemption from Fixed Assets Investment Orientation Regulatory Tax.

D. Indirect Tax and Tariff Exemption Programs

1. Stamp Exemption on Share Transfers Under Non-Tradable Share Reform.
2. Deed Tax Exemption for State Owned Enterprises (SOEs) Undergoing Mergers or Restructurings.
3. Export Incentive Payments Characterized as ''VAT Rebates.''
4. Import Tariff and VAT Exemptions for FIEs and Certain Domestic Enterprises Using Imported Equipment in Encouraged Industries.
5. Import Tariff and VAT Refunds to Promote the Development of Equipment Manufacturing in China.

E. Grant Programs

1. The State Key Technology Project Fund.
2. Subsidies for Development of Famous Export Brands and China World Top Brands.
3. Sub-Central Government Programs to Promote Famous Export Brands and China World Top Brands.
4. Exemptions for SOEs from Distributing Dividends to the State.
5. Grants to Loss-Making SOEs.
6. Program to Rebate Antidumping Fees.

F. Preferential Income Tax Subsidies for Foreign Invested Entities (FIEs)

1. Two Free, Three Half Program.
2. Income Tax Exemption Program for Export-Oriented FIEs.
3. Local Income Tax Exemption and Reduction Programs for ''Productive'' Foreign-Invested Enterprises.
4. Preferential Tax Programs for Foreign-Invested Enterprises Recognized as High or New Technology Enterprises.
5. Income Tax Subsidies for FIE's Based on Geographic Location.
6. VAT Refunds for FIE's Purchasing Domestically-Produced Equipment.

For further information explaining why the Department is investigating these programs, *see* the Initiation Checklist.

We are not including in our investigation the following programs alleged to benefit producers and exporters of the subject merchandise in the PRC:

A. Export Loans

Petitioners allege that in *Line Pipe from the PRC,* the Department found that a number of companies benefitted from export-contingent loans from SOCBs and that Chinese PC strand producers would be eligible for such loans. *See Circular Welded Carbon Quality Steel Line Pipe from the People's Republic of China: Final Affirmative Countervailing Duty Determination,* 73 FR 70961 (Nov. 24, 2008) (''*Line Pipe from the PRC*''), and accompanying Issues and Decision Memorandum (Line Pipe from PRC Decision Memorandum) at ''Export Loans'' section. According to Petitioners, this program has not been eliminated by any reforms to the Chinese banking system. Petitioners support their allegation by citing to *Line Pipe from the PRC.* However, in a subsequent initiation of a CVD investigation, the Department made clear the producers identified in that petition were the same as those investigated in *Line Pipe from the PRC. See Certain Oil Country Tubular Goods from the People's Republic of China: Initiation of Countervailing Duty Investigation,* 74 FR 20678 (May 5, 2009) (''*OCTG Initiation*''), and accompanying Initiation Checklist (OCTG Initiation Checklist) at ''Export Loans'' section. The producers investigated in *Line Pipe from the PRC* and identified in the *OCTG Initiation* are not identified in the petition filed on the record of this proceeding. Therefore, we find that the support relied on in the OCTG Initiation to initiate an investigation of export loans does not apply to the facts of this proceeding. The petitioners have provided insufficient evidence indicating that PC strand producers can benefit from this alleged program.

B. Stamp Tax Exemption and Waiver of Administrative Charges for SOEs Undergoing Mergers or Restructurings

Petitioners allege that the GOC imposes charges on companies that undergo a restructuring or reorganization in China for various administrative items that include a business registration change, trademark registration change, tax registration, property rights, and land registration. Petitioners allege that, pursuant to Cai Shui (2003) No. 184 and Ji Jia Fei (1998) No. 1077, SOEs are exempted from certain fees associated with land registration, such as land registration fees, survey fees, and measurement registration fees. The legislation cited by petitioners refers to stamp tax exemptions provided by the

municipality of Shenzhen. The petitioners did not provide copies of Cai Shui (2003) No. 184 and Ji Jia Fei (1998) No. 1077. The only documentation provided by petitioners refers to stamp tax exemptions provided by the municipality of Shenzhen. However, petitioners have not identified a producer of PC strand that is located in the municipality of Shenzhen.

C. Export Assistance Grants

Petitioners allege that the Department found this program conferred countervailable benefits on Chinese pipe producers in the *CWP from the PRC* investigation.[1] Petitioners contend that there is no reason to believe this program has been terminated, and the Department should investigate it accordingly. Aside from citing to *CWP from the PRC,* petitioners have not identified the administrating authority that is allegedly providing the export assistance grants. Therefore, Petitioners have not provided any indication whether the program is administered at the municipal, provincial, or Federal level. Nor have the petitioners shown that PC strand producers are located within the area or regions in which these assistance grants are made available.

D. Provision of Land to SOEs for Less Than Adequate Remuneration

According to petitioners, the Department initiated an investigation of the provision of land to SOEs for LTAR in *OTR Tires from the PRC.*[2] Petitioners contend that, to the extent that it does not consider this program a subset of the provision of land for LTAR generally, the Department should investigate this as a separate program. Petitioners' sole support for this allegation is the Department's initiation in the *OTR from the PRC Initiation,* which we find does not constitute sufficient evidence that PC strand producers can benefit from this alleged program. We note that the information reviewed by the Department in the *OTR from the PRC Initiation,* included company-specific information pertaining to OTR producers as well as other documentation that is not on the record of the current proceeding.

E. Government Provision of Land at Less Than Adequate Remuneration to Companies Located in Development Zones

Petitioners allege that local and provincial governments sell land for LTAR to firms located in designated geographical areas. We have recommended initiating an investigation into the Province of Jiangxi and the City of Xinyu's provision of land to FIEs for less than adequate remuneration in the context of the ''Provision of Land Use Rights for Less Than Adequate Remuneration'' program. Further, petitioner has provided no additional information to support its allegation of the provision of land for LTAR to companies located in other geographical regions outside the Province of Jiangxi and the City of Xinyu.

F. Government Restraints on Exports of Wire Rod

Petitioners allege that the GOC imposes export restrictions, such as export quotas, related export licensing and bidding requirements, minimum export prices and export duties, on the raw materials used for producing PC strand. Petitioners contend that these restrictions have resulted in artificially suppressing raw material prices of wire rod within the PRC. Petitioners have not adequately shown how these particular export taxes and licenses constitute entrustment or direction of private entities by the GOC to provide a financial contribution to producers of subject merchandise. Moreover, petitioners have not provided sufficient data regarding historic price and export trends demonstrating, *e.g.,* price decreases or decreased exports (as a whole, from China) correlated with the imposition of the alleged export restraints.

G. Tax Reduction for Enterprises Making Little Profit

According to China's WTO subsidies notification, enterprises with annual taxable incomes between RMB 30,000 and 100,000 are eligible for a 3 percent reduction in their annual income tax rate. Petitioners have not established with reasonably available information that ''enterprises making little profit'' are a *de jure* specific group because petitioners have provided no explanation of why companies with access to this program comprise an enterprise or industry, or group of enterprises or industries. *See, e.g., Preamble to Countervailing Duty Regulations,* 63 FR 65348, 65357 (November 25, 1998) ''* * * because the user represented numerous and diverse industries, the program was found not to be specific.''

H. China's Enforced Undervaluation of Its Currency

Petitioners allege that the GOC-maintained exchange rate effectively prevents the appreciation of the Chinese currency (''RMB'') against the U.S. dollar. In addition, petitioners allege that the GOC requires that foreign exchange earned from export activities be converted to RMB at the government prescribed rate. Therefore, when producers in the PRC sell their dollars at official foreign exchange banks, as required by law, the producers receive more RMB than they otherwise would if the value of the RMB were set by market mechanisms. Petitioners have not sufficiently alleged the elements necessary for the imposition of a countervailing duty and did not support the allegation with reasonably available information.

Respondent Selection

For this investigation, the Department expects to select respondents based on U.S. Customs and Border Protection (CBP) data for U.S. imports during the period of investigation. We intend to make our decision regarding respondent selection within 20 days of publication of this **Federal Register** notice. The Department invites comments regarding the CBP data and respondent selection within seven calendar days of publication of this **Federal Register** notice.

Distribution of Copies of the Petition

In accordance with section 702(b)(4)(A)(i) of the Act, a copy of the public version of the petition has been provided to the Government of the PRC. As soon as and to the extent practicable, we will attempt to provide a copy of the public version of the petition to each exporter named in the petition, consistent with section 351.203(c)(2) of the Department's regulations.

ITC Notification

We have notified the ITC of our initiation, as required by section 702(d) of the Act.

Preliminary Determination by the ITC

The ITC will preliminarily determine, within 25 days after the date on which it receives notice of the initiation, whether there is a reasonable indication that imports of subsidized PC Strand from the PRC are causing material

[1] *See Circular Welded Carbon Quality Steel Pipe from the People's Republic of China: Final Affirmative Countervailing Duty Determination and Final Affirmative Determination of Critical Circumstances,* 73 FR 31966 (June 5, 2008) (''*CWP from the PRC*''), and accompanying Issues and Decision Memorandum (CWP from the PRC Decision Memorandum) at ''Export Assistance Grants.''

[2] *Citation to Certain New Pneumatic Off-the-Road Tires From the People's Republic of China: Initiation of Countervailing Duty Investigation,* 72 FR 44122, 44124 (August 7, 2007) (''*OTR from the PRC Initiation*''), and accompanying Initiation Checklist (OTR from the PRC Initiation Checklist) at ''Provision of Land and Utilities to SOEs for Less than Adequate Remuneration.''

injury, or threatening to cause material injury, to a U.S. industry. *See* section 703(a)(2) of the Act. A negative ITC determination will result in the investigation being terminated; otherwise, the investigation will proceed according to statutory and regulatory time limits.

This notice is issued and published pursuant to section 777(i) of the Act.

Dated: June 16, 2009.

Ronald K. Lorentzen,

Acting Assistant Secretary for Import Administration.

Appendix I

Scope of the Investigation

For purposes of this investigation, prestressed concrete steel wire strand (PC strand) is steel wire strand, other than of stainless steel, which is suitable for use in, but not limited to, prestressed concrete (both pretensioned and post-tensioned) applications. The scope of this investigation encompasses all types and diameters of PC strand whether uncoated (uncovered) or coated (covered) by any substance, including but not limited to, grease, plastic sheath, or epoxy. This merchandise includes, but is not limited to, PC strand produced to the American Society for Testing and Materials (ASTM) A–416 specification, or comparable domestic or foreign specifications. PC strand made from galvanized wire is excluded from the scope if the zinc and/or zinc oxide coating meets or exceeds the 0.40 oz./ft^2 standard set forth in ASTM–A–475.

The PC strand subject to this investigation is currently classifiable under subheadings 7312.10.3010 and 7312.10.3012 of the Harmonized Tariff Schedule of the United States (HTSUS). Although the HTSUS subheadings are provided for convenience and customs purposes, the written description of the scope of this investigation is dispositive.

[FR Doc. E9–14743 Filed 6–22–09; 8:45 am]

BILLING CODE 3510–DS–P

DEPARTMENT OF COMMERCE

National Oceanic and Atmospheric Administration

RIN 0648–XP88

Magnuson–Stevens Act Provisions; General Provisions for Domestic Fisheries; Application for Exempted Fishing Permit

AGENCY: National Marine Fisheries Service (NMFS), National Oceanic and Atmospheric Administration (NOAA), Commerce.

ACTION: Notice; request for comments.

SUMMARY: The Assistant Regional Administrator for Sustainable Fisheries, Northeast Region, NMFS, has made a preliminary determination that the subject exempted fishing permit (EFP) application contains all the required information and warrants further consideration. Therefore, NMFS announces that the Assistant Regional Administrator proposes to recommend that an EFP be issued that would allow four commercial fishing vessel to conduct fishing operations that are otherwise restricted by the regulations governing the fisheries of the Northeastern United States. The EFP, which would enable the applicants to land more than one standard tote of female red crabs and to conduct at–sea sampling and tagging, would allow for exemptions for up to four vessels from the Atlantic Deep–sea Red Crab Fishery Management Plan (FMP).

Regulations under the Magnuson–Stevens Fishery Conservation and Management Act require publication of this notification to provide interested parties the opportunity to comment on applications for proposed EFPs.

DATES: Comments must be received on or before July 8, 2009.

ADDRESSES: Comments on this notice may be submitted by e–mail to *RedCrabEFP@noaa.gov*. Include in the subject line of the e–mail comment the following document identifier: ''Comments on Red Crab EFP.'' Written comments should be sent to Patricia A. Kurkul, Regional Administrator, NMFS, Northeast Regional Office, 55 Great Republic Drive, Gloucester, MA 01930. Mark the outside of the envelope ''Comments on Red Crab EFP.'' Comments may also be sent via facsimile (fax) to (978) 281–9135.

FOR FURTHER INFORMATION CONTACT: Moira Kelly, Fishery Policy Analyst, phone: 978–281–9218, fax: 978–281–9135.

SUPPLEMENTARY INFORMATION: An application for an EFP was submitted on November 19, 2008, by Dr. Richard Wahle of the Bigelow Laboratory for Ocean Sciences; Dr. Yong Chen of the School of Marine Sciences, University of Maine; and Mr. Jon Williams of the New England Red Crab Harvesters' Association. A supplementary proposal was received on February 10, 2009, that provided greater detail on the harvest of female red crabs (*Chaceon quinquidens*).

This project is fully funded by the New England Red Crab Harvesters' Association. The primary goal of the experimental fishery is to begin harvesting non–egg bearing females to expand the red crab market and increase efficiency in the harvesting process. In addition, an experimental fishery that includes non–egg bearing females would provide an opportunity to conduct at–sea sampling, renewed tagging, and model development to better evaluate the growth and reproductive performance of the population, as well as the impact of current and proposed harvesting on yields and egg production. This aspect of the project would be conducted by an onboard researcher under the direction of Dr. Wahle. The objectives of this project are as follows:

1. Characterize regional variability in the reproductive characteristics of the red crab population along the geographic range of the fishery on the New England and mid–Atlantic shelf break;
2. Conduct tagging to evaluate growth rates that will facilitate the development of growth and yield and egg production models for the fishery; and
3. Develop yield and egg per recruit models to identify potential biological reference points for red crab stock assessment and to evaluate impacts of fishing on the female red crab resource.

The experimental design calls for normal commercial fishing operations, with the addition of retaining females. The research and experimental fishing would occur within the constraints of the current management measures, including possession limits and days–at–sea limits. The research would occur during normal fishing operations by sampling the catch to evaluate the size and sex composition of the catch, including the number of egg–bearing females. Further, the applicants propose to tag up to 20,000 crabs over 2 years to analyze growth. In order to allow for sufficient numbers of crabs for the tagging project, a small number of traps would be fitted with small mesh to trap smaller crabs. All crabs would be sorted and weighed, and crabs of marketable size would be retained for sale. All discards would be released as quickly as practicable to reduce incidental mortality. All at–sea research would be conducted from one of the four active red crab fishing vessels, fishing under that vessel's DAS.

The applicant may make requests to NMFS for minor modifications and extensions to the EFP throughout the year. EFP modifications and extensions may be granted by NMFS without further notice if they are deemed essential to facilitate completion of the proposed research and result in only a minimal change in the scope or impact of the initially approved EFP request. In accordance with NOAA Administrative Order 216–6, a Categorical Exclusion or other appropriate NEPA document would be completed prior to the issuance of the EFP. Further review and consultation may be necessary before a

final determination is made to issue the EFP. After publication of this document in the **Federal Register**, the EFP, if approved, may become effective following a 15-day public comment period.

Authority: 16 U.S.C. 1801 *et seq.*

Dated: June 17, 2009.

Kristen C. Koch,

Acting Director, Office of Sustainable Fisheries, National Marine Fisheries Service.

[FR Doc. E9–14722 Filed 6–22–09; 8:45 am]

BILLING CODE 3510–22–S

DEPARTMENT OF COMMERCE

National Institute of Standards and Technology

Jointly Owned Invention Available for Non-Exclusive, Royalty-Free Licensing for Advanced Encryption Standard S-box Applications

AGENCY: National Institute of Standards and Technology, Commerce.

ACTION: Notice of jointly owned invention available for non-exclusive, royalty-free licensing for Advanced Encryption Standard S-box applications.

SUMMARY: The invention listed below is jointly owned by the U.S. Government, as represented by the Department of Commerce, and the University of Southern Denmark. The Department of Commerce's interest in the invention is available for non-exclusive, royalty-free licensing in the Field of Use of Advanced Encryption Standard S-box applications, in accordance with 35 U.S.C. 207 and 37 CFR part 404 to achieve expeditious commercialization of results of federally funded research and development.

FOR FURTHER INFORMATION CONTACT: Technical and licensing information on this invention may be obtained by writing to: National Institute of Standards and Technology, Office of Technology Partnerships, Building 820, Room 213, Gaithersburg, MD 20899. Information is also available via telephone: 301–975–3084, fax 301–975–3482, or e- mail: *brenda.thomasson@nist.gov.* Any request for information should include the NIST Docket number or Patent number and title for the invention as indicated below. The invention available for licensing is:

[Patent Number Application No. 12/367,660 filed February 9, 2009]

[NIST DOCKET NUMBER: 08–033]

Title: A New Technique for Combinational Circuit Optimization and a New Circuit for the S-Box of AES.

Abstract: A method of simplifying a combinational circuit establishes an initial combinational circuit operable to calculate a set of target signals. A quantity of multiplication operations performed in a first portion of the initial combinational circuit is reduced to create a first, simplified combinational circuit. The first portion includes only multiplication operations and addition operations. A quantity of addition operations performed in a second portion of the first, simplified combinational circuit is reduced to create a second, simplified combinational circuit. The second portion includes only addition operations. Also, the second, simplified combinational circuit is operable to calculate the target signals using fewer operations than the initial combinational circuit.

A computer-implemented method of simplifying a plurality of formulas establishes a plurality of formulas. The formulas include only addition operations, and the formulas correspond to a portion of a combinational circuit including only addition operations. A basis set including a plurality of input signals is defined. Using a computer, a distance vector is determined that includes one value for each of the plurality of formulas, the one value corresponding to a number of addition operations necessary to calculate a corresponding formula using signals from the basis set. Using the computer, two basis vectors are determined whose sum, when added to the distance vector, reduces at least one value in the distance vector, and the sum is added to the basis set. The steps of determining two basis vectors whose sum, when added to the basis set, reduces at least one value in the distance vector, and adding the sum to the basis set may be selectively repeated until the basis set includes sums corresponding to each of the plurality of formulas.

A combinational circuit for a Substitution-Box for the Advanced Encryption Standard having a total of 115 Boolean gates comprises a first, input portion, a second portion coupled to the first, input portion, and a third, output portion coupled to the second portion. The first, input portion has 23 XOR gates. The second portion has 30 XOR gate and 32 AND gates, and computes the non-linear component of inversion in GF(256). Also, in the second portion 11 of the 30 XOR gates and 5 of the 32 AND gates are operable to perform inversion in GF(16). The third, output portion has 26 XOR gates and 4 XNOR gates.

Dated: June 18, 2009.

Patrick Gallagher,

Deputy Director.

[FR Doc. E9–14734 Filed 6–22–09; 8:45 am]

BILLING CODE 3510–13–P

DEPARTMENT OF COMMERCE

National Institute of Standards and Technology

Technology Innovation Program Advisory Board

AGENCY: National Institute of Standards and Technology; Department of Commerce.

ACTION: Notice of public meeting.

SUMMARY: Pursuant to the Federal Advisory Committee Act, 5 U.S.C. app., notice is hereby given that the Technology Innovation Program Advisory Board, National Institute of Standards and Technology (NIST) will meet Tuesday, July 7, 2009 from 8:30 a.m. to 3 p.m. The Technology Innovation Program (TIP) Advisory Board is composed of ten members appointed by the Director of NIST who are eminent in such fields as business, research, science and technology, engineering, education, and management consulting. The purpose of this meeting is to review and make recommendations regarding general policy for the Technology Innovation Program, its organization, its budget, and its programs within the framework of applicable national policies as set forth by the President and the Congress. The agenda will include a TIP Update. Agenda may change to accommodate Board business.

DATES: The meeting will convene Tuesday, July 7, at 8:30 a.m. and will adjourn at 3 p.m. on Tuesday, July 7, 2009.

ADDRESSES: The meeting will be held at the National Institute of Standards and Technology, Administration Building, Employees' Lounge, Gaithersburg, Maryland 20899. Please note admittance instructions under the **SUPPLEMENTARY INFORMATION** section of this notice.

FOR FURTHER INFORMATION CONTACT: JoEllen Hansroth, National Institute of Standards and Technology, Gaithersburg, Maryland 20899–4700, telephone number (301) 975–2162. JoEllen's e-mail address is *joellen.hansroth@nist.gov.*

SUPPLEMENTARY INFORMATION: The agenda will include a TIP Update. The agenda may change to accommodate Board business. The final agenda will be

posted on the TIP Web site at: *http://www.nist.gov/tip/*.

Individuals and representatives of organizations who would like to offer comments and suggestions related to the Committee's affairs are invited to request a place on the agenda. On July 7, 2009, approximately one-half hour will be reserved for public comments, and speaking times will be assigned on a first-come, first-serve basis. The amount of time per speaker will be determined by the number of requests received, but is likely to be about 3 minutes each. Questions from the public will not be considered during this period. Speakers who wish to expand upon their oral statements, those who had wished to speak but could not be accommodated on the agenda, and those who were unable to attend in person are invited to submit written statements to the TIP Advisory Board, National Institute of Standards and Technology, 100 Bureau Drive, MS 4700, Gaithersburg, Maryland 20899–8610, via fax at (301) 975–4032, or electronically by e-mail to (*lorel.wisniewski@nist.gov*).

All visitors to the National Institute of Standards and Technology site will have to pre-register to be admitted. Please submit your name, time of arrival, e-mail address and phone number to JoEllen Hansroth no later than Wednesday, July 1, and she will provide you with instructions for admittance. Ms. Hansroth's e-mail address is *joellen.hansroth@nist.gov* and her phone number is 301–975–2162.

Dated: June 18, 2009.

Patrick Gallagher,

Deputy Director.

[FR Doc. E9–14733 Filed 6–22–09; 8:45 am]

BILLING CODE 3510–13–P

DEPARTMENT OF COMMERCE

Census Bureau

[Docket No. 090514913–9954–01]

Privacy Act of 1974; System of Records

AGENCY: U.S. Census Bureau, Department of Commerce.

ACTION: Notice of New Privacy Act System of Records; Commerce/Census-12, Foreign Trade Statistics.

SUMMARY: In accordance with the Privacy Act of 1974, as amended, Title 5, United States Code (U.S.C.) 552a(e)(4) and (11); and Office of Management and Budget (OMB) Circular A–130, Appendix I, ''Federal Agency Responsibilities for Maintaining Records About Individuals'', the Department of Commerce is issuing notice of intent to establish a new system of records entitled Commerce/Census-12, Foreign Trade Statistics. We invite public comment on the proposed new system announced in this publication.

DATES: *Comment Date:* To be considered, written comments on the proposed new system must be submitted on or before July 23, 2009.

Effective Date: Unless comments dictate otherwise, the new system will become effective as proposed on the date of publication of a subsequent notice in the **Federal Register**.

ADDRESSES: *Please address comments to:* Chief Privacy Officer, Privacy Office, Room HQ–8H168, U.S. Census Bureau, Washington, DC 20233–3700.

SUPPLEMENTARY INFORMATION: The purpose of this system of records is to account for the collection, maintenance and use of social security numbers (SSN) for a limited number of individuals, small business owners and sole proprietors without paid employees, where an employer identification number (EIN) does not exist. The Foreign Trade Statistics system and its component parts support the production of the monthly ''International Trade in Goods and Services'' report, a principal economic indicator, as authorized by Title 13, U.S.C., Section 301. The system consists of (1) the import and export transaction-level records and subsets thereof compiled for production review and control, research, analysis, investigation and customer service purposes, (2) source data systems including the Automated Export System (AES), the Internet front-end system AES*Direct,* and the Automated Foreign Trade Zone Reporting Program (AFTZRP), (3) extract files from U.S. Customs and Border Protection (CBP) systems including the Automated Commercial System (ACS) and the e-214 system for collecting Foreign Trade Zone admissions information, (4) information keyed from paper documents including the CBP Form 7501, Entry Summary; the CBP Form 214, Foreign Trade Zone Admission document; and Commerce Form 7525–V, the Shipper's Export Declaration (SED); and (5) information received from Statistics Canada under the terms of the U.S. and Canada data exchange agreement.

Commerce/Census–12

SYSTEM NAME:

Foreign Trade Statistics.

SECURITY CLASSIFICATION:

None.

SYSTEM LOCATION:

Automated Export System (AES), Automated Commercial System (ACS), e-214 System—U.S. Customs and Border Protection (CBP) National Data Center, Washington, DC.

AES*Direct*—Flagship Customs Services, contractor subject to Title 13 restrictions, Silver Spring, Maryland.

Import and Export Transaction Level Files—U.S. Census Bureau Headquarters, Suitland, Maryland and Census Bureau Computer Center, Bowie, Maryland.

CATEGORIES OF INDIVIDUALS COVERED BY THE SYSTEM:

Individuals engaged in the importation or exportation of merchandise including but not limited to the Importer of Record, the U.S. Principal Party in Interest (USPPI); the authorized agent of the importer, USPPI or Foreign Principal Party in Interest; consignees (including consignee, intermediate consignee and ultimate consignee); and the filer and the transmitter of an automated record. **Note:** Nearly all of the transactions covered by this system involve only business enterprises. However, a small percentage of transactions involve individuals engaged in the importation or exportation of goods. Such transactions may involve transportation of personal items or business activities.

CATEGORIES OF RECORDS IN THE SYSTEM:

Records maintained on individuals engaged in import or foreign trade zone activities include the following data fields: Name, address, telephone number, social security number (SSN), and border crossing number or passport number. Records maintained on individuals engaged in export activities include the following data fields: Name, address, telephone number, e-mail address, and an identifier (employer identification number (EIN) or SSN, border crossing number, or passport number). The remaining information collected contains details of the shipment and its transportation into or out of the United States, or between the United States and Puerto Rico or the U.S. Virgin Islands.

AUTHORITIES FOR MAINTENANCE OF THE SYSTEM:

Title 13, U.S.C., Chapter 9; and Foreign Trade Statistical Regulations or its successor document, the Foreign Trade Regulations, both in Title 15, CFR part 30; and Title 19, CFR 24.5.

PURPOSE(S):

The records in this system of records are used by the Census Bureau to compile the U.S. merchandise trade

statistics, a key component of the monthly U.S. International Trade in Goods and Services report (FT–900) and to provide information needed for related statistical programs of other agencies. In addition, the records in this system of records are also used by other Federal agencies to enforce U.S. export laws and regulations, to evaluate the impact of trade agreements and to monitor compliance with such agreements.

ROUTINE USES OF RECORDS MAINTAINED IN THE SYSTEM, INCLUDING CATEGORIES OF USERS AND THE PURPOSES OF SUCH USES:

1. By Census Bureau staff for use in the compilation of U.S. international trade statistics and related research and analysis, and to provide customer assistance to members of the trade community in areas such as AES filing and interpretation of the Foreign Trade Statistics Regulations and its successor, the Foreign Trade Regulations. Information from this system is matched against information in the Census Bureau's Business Register to develop data products describing the characteristics of companies that export. However, since this project does not use any Business Register subsets that contain information about individuals, (nor does any subset of the Business Register contain SSNs), no information about individuals is incorporated in the data tabulations that comprise the Exporter Database.

2. By authorized sworn staff of Flagship Customs Services (FCS) for purposes of operating the AES*Direct* system and providing customer service to AES*Direct* filers. FCS staff's access is limited to the information filed through the AES*Direct*.

3. Provided to the U.S. Bureau of Labor Statistics, the U.S. Army Corps of Engineers, U.S. Maritime Administration, Bureau of Economic Analysis, the U.S. Foreign Agricultural Service, the U.S. Federal Reserve Board and other U.S. government agencies, as authorized by a National Interest Determination (NID), for statistical purposes.

4. Provided, with authorization by CBP, to Statistics Canada (for imports from Canada only) for statistical purposes only in accordance with the terms of the U.S.—Canada Data Exchange agreement. No name, address or other identifying information is provided beyond an altered version of the importer identifier, so that no actual SSN is provided.

5. Provided to the U.S. Department of Justice (U.S. Attorneys) and U.S. courts, the U.S. Bureau of Industry and Security, the U.S. Department of Homeland Security, the U.S. Office of Naval Intelligence, the U.S. Maritime Administration, the U.S. Department of State, the Office of the U.S. Trade Representative, or other government agency, as authorized by NIDs, for purposes of enforcing U.S. export laws and regulations through analysis, investigation and prosecution of violations or other circumstances where the Secretary of Commerce or Census Bureau Director determines that withholding the information would be contrary to the national interest.

6. Provided, with authorization from CBP for import information and as authorized by an NID for export information, to the U.S. Office of Textiles and Apparel to monitor the implementation of textile agreements.

7. Provided, when authorized by NID, to appropriate agencies, entities and persons when (1) the Census Bureau suspects or has confirmed that the security or confidentiality of information in the system of records has been compromised; (2) the Census Bureau has determined that as a result of the suspected or confirmed compromise there is a risk of harm to economic or property interests, identity theft or fraud, or harm to the security or integrity of this system or other systems or programs (whether maintained by the Census Bureau or another agency or entity) that rely upon the compromised information; and (3) the disclosure made to such agencies, entities and persons is reasonably necessary to assist in connection with the Census Bureau's efforts to respond to the suspected or confirmed compromise and prevent, minimize or remedy such harm.

DISCLOSURE TO CONSUMER REPORTING AGENCIES:

None.

POLICIES AND PRACTICES FOR STORING, RETRIEVING, ACCESSING, RETAINING, AND DISPOSING OF RECORDS IN THE SYSTEM:

STORAGE:

The AES, AES*Direct* and the FT–900 systems have all been certified under the Federal Information Processing Standard requirements in accordance with the National Institute of Standards and Technology guidelines. Records are stored in a secure computerized system and on magnetic media; output data will use either electronic or paper media. Source data sets containing personal identifiers are maintained in a secure restricted-access environment. Access is controlled by use of usernames and passwords to ensure that system users may only access the information they are authorized to see. All communications between filers and the Census Bureau are encrypted. Access control lists and unique usernames and passwords, in accordance with Federal computer security guidelines; protect all data extracted by the Census Bureau from the AES.

RETRIEVABILITY:

Records of individuals may be retrieved by name, address, telephone number, SSN or the alternate identifier.

SAFEGUARDS:

The U.S. Census Bureau is committed to respecting respondent privacy and protecting confidentiality. Through the Data Stewardship Program, it has implemented management, operational, and technical controls and practices to ensure high-level data protection to respondents of our census and surveys. All U.S. Census Bureau employees, contractors and other special sworn staff under Title 13, U.S.C. 23(c) are subject to the restrictions, penalties, and prohibitions of Title 13, U.S.C., Chapter 9; 15 CFR part 30; the Privacy Act of 1974 (Title 5, U.S.C. 552a(b)(4)); Title 18, U.S.C. 1905; Title 26, U.S.C. 7213; and Title 42, U.S.C. 1306. When confidentiality or penalty provisions differ, the most stringent provisions apply to protect the data. Census Bureau employees and contractors are regularly advised of the regulations issued pursuant to Title 13, U.S.C. and other relevant statutes governing confidentiality of the data. The Trade Secrets Act, 18 U.S.C. 1905 provides for penalties of up to $100,000 or imprisonment for no more than one year, or both for any unauthorized release of confidential data. Furthermore, the use of unsecured telecommunications to transmit individually identifiable information is prohibited.

Pursuant to Title 13, U.S.C. 301(g), Shipper's Export Declaration (SED) (or any successor document) are exempt from public disclosure unless the Secretary of Commerce (whose authority has been delegated to the Census Bureau Director) determines that such an exemption would be contrary to the national interest. Releases under such NIDs have been limited to U.S. government agencies. Both the NID and the implementing Memorandum of Understanding (MOU) place strict limits upon the use of SED information, including prohibiting public disclosure except to U.S. courts when necessary to prosecute a violation of U.S. export laws and regulations. Several levels of Census Bureau management up to and including the Director review all such requests before the NID is issued. Prior to providing data to an agency pursuant

to an NID, and periodically thereafter, the Census Bureau conducts a safeguard review, including an on-site inspection, to ensure that the information provided will be adequately protected and used solely for the purposes authorized. The terms of the MOU governing the U.S.-Canada Data Exchange prohibit use of the data for any nonstatistical purpose. The import data obtained by the Census Bureau are collected under the authority of the CBP and are kept confidential by the Census Bureau, as required by law, unless disclosure is authorized by the CBP. Parties to U.S. import or export transactions that believe the published statistics disclose their confidential business information may contact the Chief, Foreign Trade Division, U.S. Census Bureau, Washington, DC 20233, 301–763–2255 to request that measures be taken to protect their information.

Access to the databases covered by this notice reside on servers/hardware reflected in the security plans and system documentation maintained by the IT Directorate. All software running on the servers is Census Bureau approved and further resides in environments that are certified and accredited. In addition to periodic virus scans, the systems are subjected to security reviews and audits. Access to the databases covered by this notice is controlled through the use of documented processes requiring the use of usernames and passwords to ensure that system users may only access the information they are authorized to see. Usernames and passwords comply with Census Bureau IT Security Policy, which includes standards for password complexity, how often they must be changed, etc. In the AES and the AES*Direct,* access is further limited by user roles, which restrict users' access to the information required to fulfill their responsibilities. Access to all databases covered by this notice is further restricted through use of access control lists.

RETENTION AND DISPOSAL:

Forms from which transaction level data are keyed are retained for three years. Consistent with 15 CFR part 30, the export transaction level records will be available to USPPIs and their agents, and authorized U.S. Federal agencies for five years unless there is a legal requirement established through a court order. In which case, the records will be retained until that order is no longer in effect. Both import and export transaction level records will be available internally indefinitely, with records archived within the Census Bureau when direct access is no longer needed. Electronic summary files are kept for 20 years or disposed of sooner if deemed no longer needed.

SYSTEM MANAGER AND ADDRESS:

Associate Director for Economic Programs, U.S. Census Bureau, 4600 Silver Hill Road, Washington, DC 20233–8000.

NOTIFICATION PROCEDURE:

To determine if this system contains records relating to you, write to: Freedom of Information Act Officer, U.S. Census Bureau, 4600 Silver Hill Road, Washington, DC 20233 or telephone 888–206–6463.

RECORD ACCESS PROCEDURES:

Individuals seeking notification of and access to any record contained in this system of records, or seeking to contest its content must submit a request in writing addressed to the Freedom of Information Act Officer at the address above. The envelope or fax cover sheet should be clearly marked ''Privacy Act Access Request.'' The request should include a general description of the records sought and must include the requester's full name, current address and contact information. Requests for notification or access should not be sent via e-mail. The request must be signed and either notarized or submitted under penalty of perjury. Additionally, outside of the Privacy Act procedures, USPPIs or their authorized agents can obtain access to the records they filed, or that were filed on their behalf by contacting the Chief, Foreign Trade Division, U.S. Census Bureau at 4600 Silver Hill Road, Washington, DC 20233; telephoning 301–763–2255; or secure faxing 301–763–8835.

CONTESTING RECORD PROCEDURES:

See ''Record Access Procedures'' above.

RECORD SOURCE CATEGORIES:

Individuals involved in import and export transactions covered in U.S. Census Bureau Foreign Trade statistics.

EXEMPTIONS CLAIMED FOR SYSTEM:

None.

Dated: June 17, 2009.

Brenda Dolan,

Department of Commerce, Freedom of Information/Privacy Act Officer.

[FR Doc. E9–14663 Filed 6–22–09; 8:45 am]

BILLING CODE 3510–07–P

DEPARTMENT OF COMMERCE

National Oceanic and Atmospheric Administration

RIN 0648–XP79

Taking Marine Mammals Incidental to Specified Activities; Offshore Exploratory Drilling in the Beaufort Sea off Alaska

AGENCY: National Marine Fisheries Service (NMFS), National Oceanic and Atmospheric Administration (NOAA), Commerce.

ACTION: Notice; withdrawal of an incidental take authorization application.

SUMMARY: Notice is hereby given that Shell Offshore, Inc. (Shell) has withdrawn its application for an Incidental Harassment Authorization (IHA). The following action is related to a proposed IHA to Shell for the take of small numbers of marine mammals, by Level B harassment, incidental to conducting open-water offshore exploratory drilling on outer continental shelf (OCS) oil lease blocks in the Beaufort Sea off Alaska during the 2008/2009 open-water season.

ADDRESSES: The documents and the application related to this action are available by writing to P. Michael Payne, Chief, Permits, Conservation, and Education Division, Office of Protected Resources, National Marine Fisheries Service, 1315 East-West Highway, Silver Spring, MD 20910–3225, or by telephoning the contact listed here.

A copy of the application containing a list of the references used in this document may be obtained by writing to the address specified above, telephoning the contact listed below (see **FOR FURTHER INFORMATION CONTACT**), or online at: *http://www.nmfs.noaa.gov/pr/permits/incidental.htm*. Documents cited in this notice may be viewed, by appointment, during regular business hours, at the aforementioned address.

FOR FURTHER INFORMATION CONTACT: Candace Nachman or Ken Hollingshead, NMFS, 301–713–2289.

SUPPLEMENTARY INFORMATION: On February 24, 2008, NMFS received a revision to Shell's October 19, 2007, application requesting an IHA. The requested IHA was for an authorization to take, by Level B harassment, small numbers of several species of marine mammals incidental to conducting open-water offshore exploratory drilling on OCS oil lease blocks in the Beaufort Sea off Alaska during the 2008/2009 open-water season. On May 13, 2009,

Shell informed NMFS that they would no longer be conducting exploratory drilling in the 2008/2009 season and requested the withdrawal of their IHA application. During the time since submitting its January 2007 Beaufort Sea OCS Lease Exploration Plan for 2007–2009 to the Minerals Management Service, Shell's priority exploration drilling locations for its Beaufort Sea leases have changed.

Dated: June 10, 2009.

James H. Lecky,

Director, Office of Protected Resources, National Marine Fisheries Service.

[FR Doc. E9–14719 Filed 6–22–09; 8:45 am]

BILLING CODE 3510–22–S

CORPORATION FOR NATIONAL AND COMMUNITY SERVICE

Information Collection; Submission for OMB Review, Comment Request

AGENCY: Corporation for National and Community Service.

ACTION: Notice.

SUMMARY: The Corporation for National and Community Service (hereinafter the ''Corporation''), has submitted a public information collection request (ICR) entitled ''AmeriCorps State and National Application and Reporting Instructions for Recovery Act Funding'' to the Office of Management and Budget (OMB) for review and approval in accordance with the Paperwork Reduction Act of 1995, Public Law 104–13, (44 U.S.C. Chapter 35). Copies of this ICR, with applicable supporting documentation, may be obtained by calling the Corporation for National and Community Service, Ms. Amy Borgstrom at (202) 606–6930. Individuals who use a telecommunications device for the deaf (TTY–TDD) may call (202) 565–2799 between 8:30 a.m. and 5 p.m. eastern time, Monday through Friday.

ADDRESSES: Comments may be submitted, identified by the title of the information collection activity, to the Office of Information and Regulatory Affairs, Attn: Ms. Sharon Mar, OMB Desk Officer for the Corporation for National and Community Service, by any of the following two methods within 30 days from the date of publication in this **Federal Register**.

(1) *By fax to:* (202) 395–6974, Attention: Ms. Sharon Mar, OMB Desk Officer for the Corporation for National and Community Service; and

(2) *Electronically by e-mail to: smar@omb.eop.gov.*

SUPPLEMENTARY INFORMATION: The OMB is particularly interested in comments which:

- Evaluate whether the proposed collection of information is necessary for the proper performance of the functions of the Corporation, including whether the information will have practical utility;
- Evaluate the accuracy of the agency's estimate of the burden of the proposed collection of information, including the validity of the methodology and assumptions used;
- Propose ways to enhance the quality, utility, and clarity of the information to be collected; and
- Propose ways to minimize the burden of the collection of information on those who are to respond, including through the use of appropriate automated, electronic, mechanical, or other technological collection techniques or other forms of information technology, *e.g.,* permitting electronic submissions of responses.

Comments

A 60-day public comment Notice was published in the **Federal Register** on Wednesday, April 1, 2009. This comment period ended June 1, 2009. No comments were received.

Description: The Corporation seeks to renew the AmeriCorps State and National Application Instructions for Recovery Act Funding. The purpose of this guidance is to assist current AmeriCorps State and National grantees in accessing American Recovery and Reinvestment Act funds to engage AmeriCorps members and community volunteers in efforts to stimulate the economy and to report on their activities. The current form is due to expire on September 30, 2009.

Type of Review: Renewal, previously granted emergency approval by OMB on March 19, 2009.

Agency: Corporation for National and Community Service.

Title: AmeriCorps State and National Recovery Act Funding Application and Reporting Instructions.

OMB Number: 3045–0132.

Agency Number: None.

Affected Public: Nonprofit organizations, State, Local and Tribal governments.

Total Respondents: 250 respondents.

Frequency: Once for applications and quarterly for one year for reports.

Average Time per Response: 8 hours.

Estimated Total Burden Hours: 10,000 hours.

Total Burden Cost (capital/startup): None.

Total Burden Cost (operating/maintenance): None.

Dated: June 16, 2009.

Lois Nembhard,

Acting Director AmeriCorps State and National.

[FR Doc. E9–14738 Filed 6–22–09; 8:45 am]

BILLING CODE 6050–$$–P

DEPARTMENT OF DEFENSE

Office of the Secretary

Federal Advisory Committee Charter

AGENCY: Department of Defense.

ACTION: Notice.

SUMMARY: Under the provisions of the Federal Advisory Committee Act of 1972, (5 U.S.C. Appendix, as amended), the Sunshine in the Government Act of 1976 (5 U.S.C. 552b, as amended), and 41 CFR 102–3.65, the Department of Defense gives notice that it intends to renew the charter for the Defense Policy Board.

FOR FURTHER INFORMATION CONTACT: Contact Jim Freeman, DoD Committee Management Office, 703–601–6128.

SUPPLEMENTARY INFORMATION: The Defense Policy Board, pursuant to 41 CFR 102–3.50(d), is a discretionary Federal advisory committee established to provide the Secretary of Defense and the Deputy Secretary of Defense, through the Under Secretary of Defense for Policy, independent, informed advice and opinion concerning matters of defense policy.

The Board will focus on: (a) Issues central to strategic DoD planning; (b) policy implications of U.S. force structure and force modernization and transformation on DoD's ability to execute U.S. defense strategy; (c) U.S. regional defense policies; and (d) any other research and analysis of topics raised by the Secretary of Defense, Deputy Secretary or Under Secretary of Defense for Policy.

The Under Secretary of Defense (Policy) may act upon the Board's advice and recommendations.

The Defense Policy Board shall be comprised of no more than twenty-eight members, who have distinguished backgrounds in national security affairs, and no more than four of the members shall be Federal officers or employees.

Board members appointed by the Secretary of Defense, who are not full-time Federal officers or employees, shall be appointed as experts and consultants under the authority of 5 U.S.C 3109, and serve as Special Government Employees. Board members will be appointed to serve a term of two years, and their consultant appointments will be renewed annually. With the

exception of travel and per diem for official travel, Board members shall serve without compensation.

The Secretary of Defense shall select the Board's Chairperson from the membership at large. In addition, the Under Secretary of Defense for Policy may appoint consultants to advise the Board and Board's task forces and these individuals shall have no voting privileges.

The Defense Policy Board shall meet at the call of the Board's Designated Federal Officer, in consultation with the Chairperson and the Under Secretary of Defense for Policy. The Designated Federal Officer shall be a full-time or permanent part-time DoD employee, and shall be appointed in accordance with established DoD policies and procedures. The Designated Federal Officer or duly appointed Alternate Designated Federal Officer shall attend all Board meetings and subcommittee meetings.

The Defense Policy Board shall be authorized to establish subcommittees, as necessary and consistent with its mission, and these subcommittees or working groups shall operate under the provisions of the Federal Advisory Committee Act of 1972 (5 U.S.C., Appendix, as amended), the Sunshine in the Government Act of 1976 (5 U.S.C. 552b, as amended), and other appropriate Federal regulations.

Such subcommittees or workgroups shall not work independently of the chartered Board, and shall report all their recommendations and advice to the Defense Policy Board for full deliberation and discussion. Subcommittees or workgroups have no authority to make decisions on behalf of the chartered Board nor can they report directly to the Department of Defense or any Federal officers or employees who are not members of the Defense Policy Board.

Pursuant to 41 CFR 102–3.105(j) and 102–3.140, the public or interested organizations may submit written statements to the Defense Policy Board membership about the committee's mission and functions. Written statements may be submitted at any time or in response to the stated agenda of planned meeting of the Defense Policy Board.

All written statements shall be submitted to the Designated Federal Officer for the Defense Policy Board, and this individual will ensure that the written statements are provided to the membership for their consideration. Contact information for the Designated Federal Officer can be obtained from the GSA's FACA Database—*https://www.fido.gov/facadatabase/public.asp.*

The Designated Federal Officer, pursuant to 41 CFR 102–3.150, will announce planned meetings of the Defense Policy Board. The Designated Federal Officer, at that time, may provide additional guidance on the submission of written statements that are in response to the stated agenda for the planned meeting in question.

Dated: June 9, 2009.

Morgan E. Frazier,

Alternate OSD Federal Register, Liaison Officer, Department of Defense.

[FR Doc. E9–14095 Filed 6–22–09; 8:45 am]

BILLING CODE 5001–06–P

DEPARTMENT OF DEFENSE

Office of the Secretary

Defense Task Force on Sexual Assault in the Military Service

AGENCY: Office of the Under Secretary of Defense (Personnel and Readiness), DoD.

ACTION: Notice of meeting; correction.

SUMMARY: The Department of Defense published a notice May 29, 2009 (74 FR 25719) announcing a meeting of the Defense Task Force on Sexual Assault in the Military Services. This notice is being published to provide an updated agenda for the meeting.

FOR FURTHER INFORMATION CONTACT: Michael Molnar, Deputy to the Executive Director; 2850 Eisenhower Avenue, Suite 100, Alexandria, Virginia 22314; phone (888) 325–6640; fax (703) 325–6710; *michael.molnar@wso.whs.mil.*

SUPPLEMENTARY INFORMATION:

Agenda

Thursday, June 25, 2009

8 a.m.–8:05 a.m.—Welcome and Administrative Remarks.
8:05 a.m.–8:10 a.m.—Opening Remarks.
8:10 a.m.–8:45 a.m.—Plan of the Day.
8:45 a.m.–9 a.m.—Break.
9 a.m.–10 a.m.—Quick Compass Briefing.
10 a.m.–12 p.m.—Subcommittee Work.
12 p.m.–1 p.m.—Noon Meal.
1 p.m.–2 p.m.—Cross-Subcommittee Briefs.
2 p.m.–2:15 p.m.—Break.
2:15 p.m.–4:15 p.m.—Ad Hoc Subcommittee work.
4:15 p.m.–4:30 p.m.—Wrap-Up.

Friday, June 26, 2009

8 a.m.–8:05 a.m.—Welcome and Administrative Remarks.
8:05 a.m.–8:10 a.m.—Opening Remarks.
8:10 a.m.–9:10 a.m.—Drill Sergeant and Instructor Briefing.
9:10 a.m.–9:20 a.m.—Break.
9:20 a.m.–10:20 a.m.—Public Comment Period.
10:20 a.m.–10:30 a.m.—Break.
10:30 a.m.–11:30 a.m.—Subcommittee work.
11:30 a.m.–12:30 p.m.—Noon Meal.
12:30 p.m.–2 p.m.—Project Planning and Tentative Report Writing Process Decisions.
2 p.m.–2:15 p.m.—Break.
2:15 p.m.–4:15 p.m.—Continuation of Project Planning and Tentative Report Writing Process Decisions.
4:15 p.m.–4:30 p.m.—Wrap-up.

Due to scheduling changes the Defense Task Force on Sexual Assault in the Military Services was unable to announce the agenda changes in the **Federal Register** for the 15-calendar days required by 41 CFR 102–3.150(a). Accordingly, the Committee Management Officer for the Department of Defense, pursuant to 41 CFR 102–3.150(b), waives the 15-calendar day notification requirement.

Dated: June 17, 2009.

Morgan E. Frazier,

Alternate OSD Federal Register Liaison Officer, Department of Defense.

[FR Doc. E9–14671 Filed 6–22–09; 8:45 am]

BILLING CODE 5001–06–P

DEPARTMENT OF DEFENSE

Office of the Secretary

Defense Audit Advisory Committee (DAAC)

AGENCY: Under Secretary of Defense (Comptroller), DoD.

ACTION: Meeting notice.

SUMMARY: Under the provisions of the Federal Advisory Committee Act of 1972 (5 U.S.C., Appendix, as amended), the Government in the Sunshine Act of 1976 (5 U.S.C. 552b, as amended), and 41 CFR 102–3.150, the Department of Defense announces the following Federal advisory committee meeting of the Defense Audit Advisory Committee will be held.

DATES: Tuesday, July 21, 2009 beginning at 3 p.m. and ending at 5 p.m.

ADDRESSES: Pentagon, Room 3E754, Washington, DC. (Escort required, see below.)

FOR FURTHER INFORMATION CONTACT: The Committee's Designated Federal Officer (DFO) is Dave Smith, Office of the Under Secretary of Defense (Comptroller) (OUSD(C)), 1155 Defense Pentagon, Room 3C653A, Washington, DC 20301–1155, *dave.smith2@osd.mil,* (703) 695–7000. For meeting

information please contact Katie Ingebretson, OUSD(C), 1155 Defense Pentagon, Room 3E768, Washington, DC 20301–1155, *Katie.ingebretson@osd.mil,* (703) 614–2039.

SUPPLEMENTARY INFORMATION:

(a) Purpose

The mission of the DAAC is to provide the Secretary of Defense, through the Under Secretary of Defense (Comptroller)/Chief Financial Officer, independent advice and recommendations on DoD financial management to include financial reporting processes, systems of internal controls, audit processes, and processes for monitoring compliance with relevant laws and regulations.

(b) Agenda

Below is the agenda for the July 21, 2009 meeting:

3 p.m. Introduction and welcome.
3:05 Swearing in of the Committee Members.
3:10 Federal Advisory Committee Act (FACA) Review.

Open Session

3:15 Comments by DAAC Chairman.
3:30 Key DoD Financial Management initiatives.
3:50 Financial information and audit readiness: progress and next steps.
4:05 Discussion topics:
- Roles and responsibilities during the audit.
- Thoughts on making financial statements more useful to DoD managers.
- Other government and private sector models.
- Thoughts on publicizing the positive aspects of DoD financial management.

4:50 Next steps for Committee.
4:55 Closing Remarks.

(c) Accessibility to the Meeting

Pursuant to 5 U.S.C. 552b and 41 CFR 102–3.140 through 102–3.165, and the availability of space, this meeting is open to the public. Seating is on a first-come basis. Members of the public who wish to attend the meeting must contact Ms. Ingebretson at the number listed in this FR notice no later than noon on Monday, July 15th to arrange a Pentagon escort. Public attendees are required to arrive at the Pentagon Metro Entrance by 2 p.m. and complete security screening by 2:15 p.m. Security screening requires two forms of identification: (1) A government-issued photo I.D., and (2) any type of secondary I.D. which verifies the individual's name (*i.e.*, debit card, credit card, work badge, social security card).

Special Accommodations: Individuals requiring special accommodations to access the public meeting should contact Ms. Ingebretson at least five business days prior to the meeting so that appropriate arrangements can be made.

(d) Procedures for Providing Written Comments

Pursuant to 41 CFR 102–3.105(j) and 102–3.140, and section 10(a)(3) of the Federal Advisory Committee Act of 1972, the public or interested organizations may submit written comments to the Committee about its mission and topics pertaining to this public session.

Written comments are accepted until the date of the meeting, however, written comments should be received by the DFO at least five business days prior to the meeting date so that the comments may be made available to the Committee members for their consideration prior to the meeting. Written comments should be submitted via e-mail to the address for the DFO given in this notice in the following formats (Adobe Acrobat, WordPerfect, or Word format).

Please Note: Since the Committee operates under the provisions of the Federal Advisory Committee Act, as amended, all written comments will be treated as public documents and will be made available for public inspection, up to and including being posted on the OUSD(C) Web site.

Dated: June 17, 2009.

Morgan E. Frazier,

Alternate OSD Federal Register Liaison Officer, Department of Defense.

[FR Doc. E9–14672 Filed 6–22–09; 8:45 am]

BILLING CODE 5001–06–P

DEPARTMENT OF EDUCATION

Notice of Proposed Information Collection Requests

AGENCY: Department of Education.

ACTION: Notice of Proposed Information Collection Requests.

SUMMARY: The Director, Information Collection Clearance Division, Regulatory Information Management Services, Office of Management, invites comments on the proposed information collection requests as required by the Paperwork Reduction Act of 1995.

DATES: An emergency review has been requested in accordance with the Act (44 U.S.C. Chapter 3507 (j)), since public harm is reasonably likely to result if normal clearance procedures are followed. Approval by the Office of Management and Budget (OMB) has been requested by June 30, 2009.

ADDRESSES: Written comments regarding the emergency review should be addressed to the Office of Information and Regulatory Affairs, Attention: Education Desk Officer, Office of Management and Budget; 725 17th Street, NW., Room 10222, New Executive Office Building, Washington, DC 20503 or e-mailed to *oira_submission@omb.eop.gov* or faxed to (202) 395–5806.

SUPPLEMENTARY INFORMATION: Section 3506 of the Paperwork Reduction Act of 1995 (44 U.S.C. Chapter 35) requires that the Director of OMB provide interested Federal agencies and the public an early opportunity to comment on information collection requests. The Office of Management and Budget (OMB) may amend or waive the requirement for public consultation to the extent that public participation in the approval process would defeat the purpose of the information collection, violate State or Federal law, or substantially interfere with any agency's ability to perform its statutory obligations. The Director, Information Collection Clearance Division, Regulatory Information Management Services, Office of Management, publishes this notice containing proposed information collection requests at the beginning of the Departmental review of the information collection. Each proposed information collection, grouped by office, contains the following: (1) Type of review requested, *e.g.,* new, revision, extension, existing or reinstatement; (2) Title; (3) Summary of the collection; (4) Description of the need for, and proposed use of, the information; (5) Respondents and frequency of collection; and (6) Reporting and/or Recordkeeping burden. ED invites public comment.

The Department of Education is especially interested in public comment addressing the following issues: (1) Is this collection necessary to the proper functions of the Department; (2) will this information be processed and used in a timely manner; (3) is the estimate of burden accurate; (4) how might the Department enhance the quality, utility, and clarity of the information to be collected; and (5) how might the Department minimize the burden of this collection on respondents, including through the use of information technology.

Dated: June 18, 2009.

Angela C. Arrington,

Director, Information Collection Clearance Division, Regulatory Information Management Services, Office of Management.

Office of Elementary and Secondary Education

Type of Review: New.

Title: Evaluation and Accountability Reports for Title II, Part D of ESEA.

Abstract: This submission requests emergency approval to require States to submit to the Department two written reports: (1) The State's most recent Ed Tech evaluation report; and (2) A description of the States System of Accountability for Ed Tech funds which will include: (a) A description of how the SEA will ensure, for school years (SYs) 2009–2010 and 2010–2011, that LEAs and eligible local entities that receive Ed Tech funds (either competitively or by formula) are meeting their evaluation responsibilities; and (b) a description of the process and accountability measures that the SEA will use, for SYs 2009–2010 and 2010–2011, to evaluate the effectiveness of Ed Tech-supported activities.

Additional Information: Approval is needed by June 30, 2009 so that the Department can issue relevant program guidance and accountability reporting requirements on July 1, 2009, when the Department issues the Title II, D ARRA grant awards. The Department has had to work under extremely tight timelines to develop program reporting requirements consistent with the unprecedented accountability and transparency ARRA demands. The Department wants to apprise States of the reporting requirements as soon as possible so that States will have sufficient time to comply. Issuing the reporting requirements along with the awards on July 1 gives States approximately 90 calendar days to comply with the requirements.

Frequency: Annually.

Affected Public: State, Local, or Tribal Gov't, SEAs or LEAs.

Reporting and Recordkeeping Hour Burden:

Responses: 53.

Burden Hours: 583.

Requests for copies of the proposed information collection request may be accessed from *http://edicsweb.ed.gov,* by selecting the ''Browse Pending Collections'' link and by clicking on link number 4073. When you access the information collection, click on ''Download Attachments'' to view. Written requests for information should be addressed to U.S. Department of Education, 400 Maryland Avenue, SW., LBJ, Washington, DC 20202–4537. Requests may also be electronically mailed to the Internet address *ICDocketMgr@ed.gov* or faxed to 202–401–0920. Please specify the complete title of the information collection when making your request.

Comments regarding burden and/or the collection activity requirements should be electronically mailed to *ICDocketMgr@ed.gov.* Individuals who use a telecommunications device for the deaf (TDD) may call the Federal Information Relay Service (FIRS) at 1–800–877–8339.

[FR Doc. E9–14751 Filed 6–22–09; 8:45 am]

BILLING CODE 4000–01–P

DEPARTMENT OF ENERGY

Western Area Power Administration

Amistad and Falcon Projects Rate Order No. WAPA–143

AGENCY: Western Area Power Administration, DOE.

ACTION: Notice of Order Concerning a Power Rate Formula.

SUMMARY: The Deputy Secretary of Energy confirmed and approved Rate Order No. WAPA–143 placing a power rate formula for the Amistad and Falcon Projects of the Western Area Power Administration (Western) into effect on an interim basis. The provisional power rate formula will be in effect on an interim basis until the Federal Energy Regulatory Commission (FERC) confirms, approves, and places it into effect on a final basis, or until the power rate formula is replaced by another power rate formula.

DATES: The provisional rate formula will be placed into effect on an interim basis on June 8, 2009, and will be in effect until the FERC confirms, approves, and places the provisional rate formula into effect on a final basis through June 7, 2014, or until superseded.

FOR FURTHER INFORMATION CONTACT: Mr. Bradley S. Warren, CRSP Manager, Colorado River Storage Project Management Center, Western Area Power Administration, 150 East Social Hall Avenue, Suite 300, Salt Lake City, UT 84111–1580, (801) 524–5493, e-mail *warren@wapa.gov*, or Ms. Carol Loftin, Rates Manager, Colorado River Storage Project Management Center, Western Area Power Administration, 150 East Social Hall Avenue, Suite 300, Salt Lake City, UT 84111–1580, (801) 524–6380, e-mail *loftinc@wapa.gov*.

SUPPLEMENTARY INFORMATION: The Amistad and Falcon Dams are features of international water storage projects located on the Rio Grande River between Texas and Mexico. Under the terms of Contract No. 7–07–50–P0890 (Contract) dated August 9, 1977, Western marketed the power from these dams to two electric cooperatives, South Texas Electric Cooperative, Inc. (STEC or Customer), and Medina Electric Cooperative (MEC). Under an October 19, 1995, amendment to the Contract, MEC notified Western that it had transferred its generation and transmission facilities to STEC and would be a distribution cooperative served by STEC and requested that MEC's interest in the Contract be assigned to STEC. Western approved the Contract amendment. The power rate formula of the Contract was approved by the Federal Power Commission (FPC), predecessor to FERC, in Docket No. E–9566 on August 12, 1977 (59 FPC 1653), for a 5-year period effective on the date of initial operation of the Amistad Power Plant, June 8, 1983.[1]

According to article 9(a) of the Contract, Western calculates the annual installment to be paid by the Customer, for the power generated at the Amistad and Falcon power plants on or before August 31 of the year preceding the fiscal year to which it pertains, and codifies this amount in a revised Exhibit A to the Contract. Each annual installment pays the annual amortized portion of the United States' investment in the Amistad and Falcon hydroelectric facilities with interest, and the associated operation, maintenance, and administrative costs. This repayment schedule is not dependent upon the power and energy made available for sale or the rate of generation each year.

By Delegation Order No. 00–037.00, effective December 6, 2001, the Secretary of Energy delegated: (1) The authority to develop power and transmission rates to Western's Administrator, (2) the authority to confirm, approve, and place such rates into effect on an interim basis to the Deputy Secretary, and (3) the authority to confirm, approve, and place into effect on a final basis, to remand, or to disapprove such rates to FERC. Existing Department of Energy procedures for public participation in power rate adjustments (10 CFR 903) were published on September 18, 1985.

[1] A 5-year rate renewal of this same rate formula through June 7, 1993, was approved by FERC on July 20, 1988, at 44 FERC ¶ 62,058. Subsequent 5-year renewals of the rate formula have been approved by FERC. The most recent approval was on January 31, 2005, in Docket No. EF04–5101–000, which approved the same rate formula through June 7, 2009 (110 FERC ¶ 62,083).

Under Delegation Order Nos. 00–037.00 and 00–001.00C, 10 CFR part 903, and 18 CFR part 300, I hereby confirm, approve, and place Rate Order No. WAPA–143 into effect on an interim basis. The rate formula will be promptly submitted to FERC for confirmation and approval on a final basis.

Dated: Jun 15, 2009.

Daniel B. Poneman,

Deputy Secretary.

Department Of Energy

Secretary

Rate Order No. WAPA–143.

In the Matter of: Western Area Power Administration Power Rate Formula Adjustment for the Amistad and Falcon Projects: Order Confirming, Approving, and Placing the Power Rate Formula for Amistad and Falcon Projects Into Effect on an Interim Basis

This renewal of this power rate formula for the Amistad and Falcon Projects of the Western Area Power Administration (Western) was established in accordance with section 302 of the Department of Energy (DOE) Organization Act (42 U.S.C. 7152). This Act transferred to and vested in the Secretary of Energy the power marketing functions of the Secretary of the Department of the Interior and the Bureau of Reclamation (Reclamation) under the Reclamation Act of 1902 (ch. 1093, 32 Stat. 388), as amended and supplemented by subsequent laws, particularly section 9(c) of the Reclamation Act of 1939 (43 U.S.C. 485h(c)), and other acts that specifically apply to the project involved.

By Delegation Order No. 00–037.00, effective December 6, 2001, the Secretary of Energy delegated: (1) The authority to develop power and transmission rates to Western's Administrator, (2) the authority to confirm, approve, and place such rates into effect on an interim basis to the Deputy Secretary of Energy, and (3) the authority to confirm, approve, and place into effect on a final basis, to remand, or to disapprove such rates to the Federal Energy Regulatory Commission (FERC). Existing DOE procedures for public participation in power rate adjustments (10 CFR part 903) were published on September 18, 1985.

Acronyms and Definitions

As used in this Rate Order, the following acronyms and definitions apply:

Contract: Contract No. 7–07–50–P0890 dated August 9, 1977, and amended on October 19, 2005, between Western and South Texas Electric Cooperative.
Customer: South Texas Electric Cooperative, Inc.
DOE: Department of Energy.
DOE Order RA 6120.2: An order outlining power marketing administration financial reporting and ratemaking procedures.
FERC: Federal Energy Regulatory Commission.
FPC: Federal Power Commission—Predecessor to FERC.
FY: Fiscal year is the period from October 1 to September 30.
MEC: Medina Electric Cooperative.
NEPA: National Environmental Policy Act of 1969 (42 U.S.C. 4321, *et seq.*).
O&M: Operation and maintenance.
PRS: Power repayment study.
Reclamation: United States Department of Interior, Bureau of Reclamation.
Secretary: Secretary of Energy.
STEC: South Texas Electric Cooperative, Inc.
U.S. Section: United States Section of the International Boundary and Water Commission.
Western: United States Department of Energy, Western Area Power Administration.

Effective Date

The power rate formula will take effect June 8, 2009, and will remain in effect until June 7, 2014, pending approval by FERC on a final basis.

Public Notice and Comment

Subsection 903.23(a) of 10 CFR 903 does not require either a consultation and comment period, or public information or comment forums for rate extensions. Western considers this rate order a rate extension since the power rate formula is not changing; rather it is going through the course of a 5-year renewal. Western's sole customer under this rate extension, South Texas Electric Cooperative, Inc. (Customer or STEC), expressed its desire to continue using the power rate formula through an e-mail dated December 8, 2008. In addition, on April 2, 2009, Western met with the Customer in Nursery, Texas, where Western notified it of Western's intent to continue the power rate formula. Western also discussed the number of years covered in the annual installments, operation and maintenance funding, answered questions, and received comments and suggestions. The Customer expressed support for a renewal of the power rate formula.

Project Description

The Amistad and Falcon Dams are features of international water storage projects located on the Rio Grande River between Texas and Mexico. Western markets the power from these dams under the terms of Contract No. 7–07–50–P0890 (Contract), dated August 9, 1977.

On August 12, 1977, in Docket No. E–9566, the Federal Power Commission (FPC) approved for a 5-year period the power rate formula contained in the Contract between Reclamation, and two electric cooperatives, STEC and Medina Electric Cooperative (MEC), to become effective on the date of initial operation of Amistad Power Plant (59 FPC 1653). The effective date of the FPC order was June 8, 1983. STEC and MEC agreed to purchase all of the output of the Amistad and Falcon Power Plants and to pay the United States an annual installment as discussed in the Contract for a 50-year period, beginning when electric service initially became available from Amistad.

On October 1, 1977, the power marketing functions of Reclamation were transferred to Western and Western became responsible for the administration of the Contract. Western, STEC and MEC executed Supplement No. 1 to the Contract on April 10, 1986, to clarify the method for determining the annual installment consistent with DOE Order No. RA 6120.2. Those clarifications address repayment of Falcon hydroelectric facilities within the remaining period, establish interest during construction at seven (7) percent, discuss capitalization of major replacements and additions at current interest rates, and specify the actual date of initial service as June 8, 1983.

Under an October 19, 1995, amendment to the Contract, MEC notified Western that it had transferred its generation and transmission facilities to STEC and would be a distribution cooperative served by STEC and requested that MEC's interest in the Contract be assigned to STEC. Western approved the Contract amendment.

Supplement No. 1 required the amount of each annual installment be established in advance by the contracting officer in consultation with the U.S. Section and submitted to STEC as Exhibit A on or before August 31 of the year preceding the appropriate FY in accordance with the following:

The amount of each annual installment shall be the sum of:

(1) An annual repayment installment including interest, to amortize within the remaining period, the unpaid United States investment in the Falcon hydroelectric facilities and in the penstocks at Amistad Dam; plus

(2) An annual installment to amortize over a 50-year period, the United States actual total investment costs with interest, for hydroelectric power facilities, not including penstocks, at Amistad Dam to be under the jurisdiction of the U.S. Section, including the costs of engineering plans, supervision, administration of construction, and interest during construction * * * and

(3) The annual operation, maintenance, replacement, and administration costs of the

U.S. Section and the administration costs of Western related directly or indirectly to the United States power facilities at Amistad Dam and at Falcon Dam, provided that such costs shall be based on prudent and businesslike management practices and in accordance with established electric industry operation and maintenance practices * * *

The billing procedures contained in Supplement No. 1 require Western to submit an invoice to the Customer for each monthly payment toward the annual installment on or before the tenth day of the month for which such payment is due. Payments are due and payable by the Customer on the first day of the following month. Western divides the calculated annual installment by twelve and bills the Customer monthly for this amount.

As detailed above, the rate formula of the Contract was approved by the FPC, for a 5-year period beginning June 8, 1983, and subsequent 5-year renewals of the power rate formula have been approved by FERC through June 7, 2009.[1] Consequently, FERC's approval is now sought for an additional 5-year period. The effective dates are scheduled to be June 8, 2009, through June 7, 2014.

Power Repayment Studies

The Contract requires that Western calculate the annual installment to be paid by the Customer for the power generated at the Amistad and Falcon Power Plants, in consultation with the United States Section of the International Boundary and Water Commission (U.S. Section), and submit it to the Customer in the form of a contract exhibit on or before August 31 of the year preceding the FY to which it pertains.

Western calculates the annual installment based on 2 years of data. The calculation includes the projected costs of the rate installment year (future FY) and an adjustment from the last historic FY. The adjustment is the surplus or deficit that occurs in the last historic FY when actual costs and repayment obligations are subtracted from actual revenues. This surplus or deficit is combined with the projected rate installment year costs to arrive at the rate installment.

Statement of Revenue and Related Expenses

The following table provides a summary of revenues and expenses for the current power rate formula and the actual revenues and expenses for the same period.

AMISTAD/FALCON COMPARISON OF 6-YEAR REVENUES AND EXPENSES FY 2004–2009

($000)

Item	Projected from FY 2004 PRS	[1]Actual from FY 2008 PRS	Difference
Total Revenues	28,825	29,702	877
Revenues Distribution:			
O&M	14,479	14,273	(206)
Interest	11,629	11,743	114
Repayment	2,717	2,775	58
(Deficit)/Surplus	.....	911	911
Total Revenue Distribution	28,825	29,702	877

[1] Although this rate process seeks approval for a 5-year period (FY 2009–2014), 6 years of data are shown in the above table due to FY 2009 data being an estimate, and is used for the current 2009 rate installment.

The following table provides a summary of the projected revenues and expenses during the provisional power rate formula period.

AMISTAD/FALCON 6-YEAR PROJECTIONS[1] REVENUES AND EXPENSES

($000)

	FY 2009–2014
Total Revenues	28,789
Revenue Distribution:	
O&M	14,080
Interest	11,035
Investment Repayment	3,674
Total	28,789

[1] Although this rate process seeks approval for a 5-year period (FY 2009–2014), 6 years of data are shown in the above table due to FY 2009 data being an estimate, and is used for the current 2009 rate installment.

Availability of Information

Information regarding this power rate formula renewal, including a PRS, letters, e-mail, and other supporting material made or kept by Western and used to develop the power rate formula, is available for public review at the Colorado River Storage Project Management Center, Western Area Power Administration, 150 East Social Hall Avenue, Suite 300, Salt Lake City, UT 84111. Some of these documents are available at *http://www.wapa.gov/crsp/ratescrsp/adjustments.htm* under CRSP Rate Adjustment documents for the Amistad and Falcon Projects section.

Ratemaking Procedure Requirements

Environmental Compliance

In compliance with the National Environmental Policy Act (NEPA) of 1969 (42 U.S.C. 4321, *et seq.*); Council on Environmental Quality Regulations (40 CFR parts 1500–1508); and DOE NEPA Regulations (10 CFR part 1021), Western has determined that this action is categorically excluded from the preparation of an environmental assessment or environmental impact statement.

Determination Under Executive Order 12866

Western has an exemption from centralized regulatory review under Executive Order 12866; accordingly, no clearance of this notice by the Office of Management and Budget is required.

Submission to Federal Energy Regulatory Commission

The interim rate formula renewal herein confirmed, approved, and placed into effect on an interim basis, together with supporting documents, will be submitted to FERC for confirmation and approval on a final basis.

Order

In view of the foregoing and under the authority delegated to me, I confirm and approve and place into effect on an

[1] A 5-year rate renewal of this same rate formula through June 7, 1993, was approved by FERC on July 20, 1988, at 44 FERC § 62,058. Subsequent 5-year renewals of the rate formula have been approved by FERC. The most recent approval was on January 31, 2005, in Docket No. EF04–5101–000, which approved the same rate formula through June 7, 2009 (110 FERC 62,083).

interim basis a renewal of the rate formula, effective June 8, 2009. The rate formula shall remain in effect on an interim basis, pending FERC's confirmation and approval of this or a substitute rate formula on a final basis through June 7, 2014.

Dated: June 15, 2009.

Daniel B. Poneman.

Deputy Secretary.

[FR Doc. E9–14683 Filed 6–22–09; 8:45 am]

BILLING CODE 6450–01–P

DEPARTMENT OF ENERGY

Federal Energy Regulatory Commission

[Project No. 503–048]

Idaho Power Company; Notice of Application Ready for Environmental Analysis and Soliciting Comments, Recommendations, Terms and Conditions, and Prescriptions

June 16, 2009.

Take notice that the following hydroelectric application has been filed with the Commission and is available for public inspection.

a. *Type of Application:* New license.

b. *Project No.:* 503–048.

c. *Date filed:* June 26, 2008.

d. *Applicant:* Idaho Power Company.

e. *Name of Project:* Swan Falls Project.

f. *Location:* On the Snake River in Ada and Owyhee counties, Idaho, about 35 miles southwest of Boise. The project occupies federal lands administered by the Bureau of Land Management.

g. *Filed Pursuant to:* Federal Power Act 16 USC 791 (a)–825(r).

h. *Applicant Contact:* Mr. Rex Blackburn, Senior Vice President and General Counsel, Idaho Power Company, P.O. Box 70, Boise, Idaho, 83707, *rblackburn@idahopower.com.*

i. *FERC Contact:* Jim Puglisi, (202) 502–6241, *james.puglisi@ferc.gov.*

j. Deadline for filing comments, recommendations, terms and conditions, and prescriptions is 60 days from the issuance of this notice; reply comments are due 105 days from the issuance date of this notice.

All documents (original and eight copies) should be filed with: Kimberly D. Bose, Secretary, Federal Energy Regulatory Commission, 888 First Street, NE., Washington, DC 20426.

The Commission's Rules of Practice require all intervenors filing documents with the Commission to serve a copy of that document on each person on the official service list for the project. Further, if an intervenor files comments or documents with the Commission relating to the merits of an issue that may affect the responsibilities of a particular resource agency, they must also serve a copy of the document on that resource agency.

Comments, recommendations, terms and conditions, and prescriptions may be filed electronically via the Internet in lieu of paper. The Commission strongly encourages electronic filings. See CFR 385.2001(a)(1)(iii) and the instructions on the Commission's Web site (*http://www.ferc.gov/docs-filing/ferconline.asp*) under the ''e-filing'' link. For a simpler method of submitting text only comments, click on ''Quick Comment.''

k. This application has been accepted, and is ready for environmental analysis at this time.

l. The project consists of: (1) A 1,218-foot-long concrete gravity and rock-fill dam composed of an abutment embankment, a spillway section, a center island, the old powerhouse section, the intermediate dam, and the new powerhouse; (2) a 12-mile-long 1,525-acre reservoir with a normal maximum water surface elevation of 2,314 feet mean sea level (msl); (3) twelve equal-width, concrete spillways with a capacity of 105,112 cubic feet per second (cfs) at reservoir elevation 2,318 msl, divided into two sections (western and eastern)—the western section, contiguous with the abutment embankment, is a gated, concrete ogee section with eight radial gates, and the eastern section, which is adjacent to the island, contains four radial gates; (4) two concrete flow channels; (5) two pit-bulb turbine generators with a nameplate rating of 25 MW; (6) a powerhouse completed in 1994; (7) a 1,400-foot-long, 120-foot-wide excavated tailrace channel; (8) a 33,600-kilovolt ampere (kVA) main power transformer; (9) a 1-mile-long, 138-kilovolt (kV) transmission line; and (10) appurtenant equipment. The estimated average annual energy production from the project is about 125,720 megawatt-hours (MWh), with an average monthly generation ranging from 8,740 MWh in June to 11,750 MWh in January. The applicant proposes to continue the run-of-river operations of the project with a minor change to the minimum flow regime and continuation of the existing ramping rate restrictions. The applicant also proposes a net reduction in the acreage within the project boundary.

m. A copy of the application is available for review at the Commission in the Public Reference Room or may be viewed on the Commission's Web site at *http://www.ferc.gov* using the ''eLibrary'' link. Enter the docket number excluding the last three digits in the docket number field to access the document. For assistance, contact FERC Online Support at *FERCOnlineSupport@ferc.gov* or toll-free at 1–866–208–3676, or for TTY, (202) 502–8659. A copy is also available for inspection and reproduction at the address in item h above.

All filings must (1) bear in all capital letters the title ''COMMENTS'', ''REPLY COMMENTS'', ''RECOMMENDATIONS,'' ''TERMS AND CONDITIONS,'' or ''PRESCRIPTIONS;'' (2) set forth in the heading the name of the applicant and the project number of the application to which the filing responds; (3) furnish the name, address, and telephone number of the person submitting the filing; and (4) otherwise comply with the requirements of 18 CFR 385.2001 through 385.2005. All comments, recommendations, terms and conditions or prescriptions must set forth their evidentiary basis and otherwise comply with the requirements of 18 CFR 4.34(b). Agencies may obtain copies of the application directly from the applicant. Each filing must be accompanied by proof of service on all persons listed on the service list prepared by the Commission in this proceeding, in accordance with 18 CFR 4.34(b), and 385.2010.

You may also register online at *http://www.ferc.gov/docs-filing/esubscription.asp* to be notified via e-mail of new filings and issuances related to this or other pending projects. For assistance, contact FERC Online Support.

n. A license applicant must file no later than 60 days following the date of issuance of this notice: (1) A copy of the water quality certification; (2) a copy of the request for certification, including proof of the date on which the certifying agency received the request; or (3) evidence of waiver of water quality certification.

Kimberly D. Bose,

Secretary.

[FR Doc. E9–14652 Filed 6–22–09; 8:45 am]

BILLING CODE 6717–01–P

DEPARTMENT OF ENERGY

Federal Energy Regulatory Commission

[Docket No. ID–6107–000]

Utt, James G.; Notice of Filing

June 16, 2009.

Take notice that on June 15, 2009, James Utt filed an application for authorization to hold interlocking

positions, pursuant to section 305(b) of the Federal Power Act, 16 U.S.C. 825d (2006); part 45 of the regulations of the Federal Energy Regulatory Commission, 18 CFR part 35 (2008); and Commission Order No. 664, *Commission Authorization to Hold Interlocking Positions,* Order No. 664, 70 Fed. Reg. 55717 (September 23, 2005), FERC Stats. & Regs. 31,194, 112 FERC 61,298 (2005), *order denying reh'g,* Order No. 669–A, 114 FERC 61,142 (2006).

Any person desiring to intervene or to protest this filing must file in accordance with Rules 211 and 214 of the Commission's Rules of Practice and Procedure (18 CFR 385.211, 385.214). Protests will be considered by the Commission in determining the appropriate action to be taken, but will not serve to make protestants parties to the proceeding. Any person wishing to become a party must file a notice of intervention or motion to intervene, as appropriate. Such notices, motions, or protests must be filed on or before the comment date. On or before the comment date, it is not necessary to serve motions to intervene or protests on persons other than the Applicant.

The Commission encourages electronic submission of protests and interventions in lieu of paper using the ''eFiling'' link at *http://www.ferc.gov.* Persons unable to file electronically should submit an original and 14 copies of the protest or intervention to the Federal Energy Regulatory Commission, 888 First Street, NE., Washington, DC 20426.

This filing is accessible on-line at *http://www.ferc.gov*, using the ''eLibrary'' link and is available for review in the Commission's Public Reference Room in Washington, DC. There is an ''eSubscription'' link on the Web site that enables subscribers to receive e-mail notification when a document is added to a subscribed docket(s). For assistance with any FERC Online service, please e-mail *FERCOnlineSupport@ferc.gov*, or call (866) 208–3676 (toll free). For TTY, call (202) 502–8659.

Comment Date: 5 p.m. Eastern Time on June 25, 2009.

Kimberly D. Bose,

Secretary.

[FR Doc. E9–14653 Filed 6–22–09; 8:45 am]

BILLING CODE 6717–01–P

DEPARTMENT OF ENERGY

Federal Energy Regulatory Commission

[Docket Nos. ER06–615–000; ER07–1257–000; ER08–1113–000; ER08–1178–000; ER09–241–000]

California Independent System Operator Corporation; Notice of FERC Staff Attendance

June 16, 2009.

The Federal Energy Regulatory Commission (Commission) hereby gives notice that on the following dates members of its staff will participate in teleconferences and meetings to be conducted by the California Independent System Operator (CAISO). The agenda and other documents for the teleconferences and meetings are available on the CAISO's Web site, *http://www.caiso.com.*

June 17, 2009	Settlements and Market Clearing User Group.
	Congestion Revenue Rights.
	Meeting of Market Surveillance Committee.
June 18, 2009	Market Issues.
June 19, 2009	Market Initiatives Roadmap.
June 23, 2009	Systems Interface User Group.
	BPM Change Management.
June 24, 2009	Congestion Revenue Rights.
	Settlements and Market Clearing User Group.
	Release Planning Workshop.
June 25, 2009	Market Issues.
June 26, 2009	Participating Intermittent Resource Program.
June 30, 2009	Systems Interface User Group.
	Comparable Treatment of Generation and non Generation for Ancillary Services.

Sponsored by the CAISO, the teleconferences and meetings are open to all market participants, and Commission staff's attendance is part of the Commission's ongoing outreach efforts. The teleconferences and meetings may discuss matters at issue in the above captioned dockets.

For further information, contact Saeed Farrokhpay at *saeed.farrokhpay@ferc.gov;* (916) 294–0322 or Maury Kruth at *maury.kruth@ferc.gov,* (916) 294–0275.

Kimberly D. Bose,

Secretary.

[FR Doc. E9–14654 Filed 6–22–09; 8:45 am]

BILLING CODE 6717–01–P

ENVIRONMENTAL PROTECTION AGENCY

[EPA–HQ–OPPT–2009–0309; FRL–8422–8]

Certain New Chemicals; Receipt and Status Information

AGENCY: Environmental Protection Agency (EPA).

ACTION: Notice.

SUMMARY: Section 5 of the Toxic Substances Control Act (TSCA) requires any person who intends to manufacture (defined by statute to include import) a new chemical (i.e., a chemical not on the TSCA Inventory) to notify EPA and comply with the statutory provisions pertaining to the manufacture of new chemicals. Under sections 5(d)(2) and 5(d)(3) of TSCA, EPA is required to publish a notice of receipt of a premanufacture notice (PMN) or an application for a test marketing exemption (TME), and to publish periodic status reports on the chemicals under review and the receipt of notices of commencement to manufacture those chemicals. This status report, which covers the period from April 27, 2009 through May 22, 2009, consists of the PMNs and TME, both pending or expired, and the notices of commencement to manufacture a new chemical that the Agency has received under TSCA section 5 during this time period.

DATES: Comments identified by the specific PMN number or TME number, must be received on or before July 23, 2009.

ADDRESSES: Submit your comments, identified by docket identification (ID)

number EPA–HQ–OPPT–2009–0309, by one of the following methods:

• *Federal eRulemaking Portal*: *http://www.regulations.gov*. Follow the on-line instructions for submitting comments.

• *Mail*: Document Control Office (7407M), Office of Pollution Prevention and Toxics (OPPT), Environmental Protection Agency, 1200 Pennsylvania Ave., NW., Washington, DC 20460–0001.

• *Hand Delivery*: OPPT Document Control Office (DCO), EPA East Bldg., Rm. 6428, 1201 Constitution Ave., NW., Washington, DC. Attention: Docket ID Number EPA–HQ–OPPT–2009–0309. The DCO is open from 8 a.m. to 4 p.m., Monday through Friday, excluding legal holidays. The telephone number for the DCO is (202) 564–8930. Such deliveries are only accepted during the DCO's normal hours of operation, and special arrangements should be made for deliveries of boxed information.

Instructions: Direct your comments to docket ID number EPA–HQ–OPPT–2009–0309. EPA's policy is that all comments received will be included in the docket without change and may be made available on-line at *http://www.regulations.gov*, including any personal information provided, unless the comment includes information claimed to be Confidential Business Information (CBI) or other information whose disclosure is restricted by statute. Do not submit information that you consider to be CBI or otherwise protected through regulations.gov or e-mail. The regulations.gov website is an ''anonymous access'' system, which means EPA will not know your identity or contact information unless you provide it in the body of your comment. If you send an e-mail comment directly to EPA without going through regulations.gov, your e-mail address will be automatically captured and included as part of the comment that is placed in the docket and made available on the Internet. If you submit an electronic comment, EPA recommends that you include your name and other contact information in the body of your comment and with any disk or CD-ROM you submit. If EPA cannot read your comment due to technical difficulties and cannot contact you for clarification, EPA may not be able to consider your comment. Electronic files should avoid the use of special characters, any form of encryption, and be free of any defects or viruses. For additional information about EPA's public docket, visit the EPA Docket Center homepage at *http://www.epa.gov/epahome/dockets.htm*.

Docket: All documents in the docket are listed in the docket index available in regulations.gov. To access the electronic docket, go to *http://www.regulations.gov*, select ''Advanced Search,'' then ''Docket Search.'' Insert the docket ID number where indicated and select the ''Submit'' button. Follow the instructions on the regulations.gov website to view the docket index or access available documents. Although listed in the index, some information is not publicly available, e.g., CBI or other information whose disclosure is restricted by statute. Certain other material, such as copyrighted material, will be publicly available only in hard copy. Publicly available docket materials are available electronically at *http://www.regulations.gov*, or, if only available in hard copy, at the OPPT Docket. The OPPT Docket is located in the EPA Docket Center (EPA/DC) at Rm. 3334, EPA West Bldg., 1301 Constitution Ave., NW., Washington, DC. The EPA/DC Public Reading Room hours of operation are 8:30 a.m. to 4:30 p.m., Monday through Friday, excluding Federal holidays. The telephone number of the EPA/DC Public Reading Room is (202) 566–1744, and the telephone number for the OPPT Docket is (202) 566–0280. Docket visitors are required to show photographic identification, pass through a metal detector, and sign the EPA visitor log. All visitor bags are processed through an X-ray machine and subject to search. Visitors will be provided an EPA/DC badge that must be visible at all times in the building and returned upon departure.

FOR FURTHER INFORMATION CONTACT: Colby Lintner, Regulatory Coordinator, Environmental Assistance Division, Office of Pollution Prevention and Toxics (7408M), Environmental Protection Agency, 1200 Pennsylvania Ave., NW., Washington, DC 20460–0001; telephone number: (202) 554–1404; e-mail address: *TSCA-Hotline@epa.gov*.

SUPPLEMENTARY INFORMATION:

I. General Information

A. Does This Action Apply to Me?

This action is directed to the public in general. As such, the Agency has not attempted to describe the specific entities that this action may apply to. Although others may be affected, this action applies directly to the submitter of the premanufacture notices addressed in the action. If you have any questions regarding the applicability of this action to a particular entity, consult the person listed under **FOR FURTHER INFORMATION CONTACT**.

B. What Should I Consider as I Prepare My Comments for EPA?

1. *Submitting CBI*. Do not submit this information to EPA through regulations.gov or e-mail. Clearly mark the part or all of the information that you claim to be CBI. For CBI information in a disk or CD-ROM that you mail to EPA, mark the outside of the disk or CD-ROM that you mail to EPA, mark the outside of the disk or CD-ROM as CBI and then identify electronically within the disk or CD-ROM the specific information that is claimed as CBI. In addition to one complete version of the comment that includes information claimed as CBI, a copy of the comment that does not contain the information claimed as CBI must be submitted for inclusion in the public docket. Information so marked will not be disclosed except in accordance with procedures set forth in 40 CFR part 2.

2. *Tips for preparing your comments*. When submitting comments, remember to:

i. Identify the document by docket ID number and other identifying information (subject heading, **Federal Register** date and page number).

ii. Follow directions. The Agency may ask you to respond to specific questions or organize comments by referencing a Code of Federal Regulations (CFR) part or section number.

iii. Explain why you agree or disagree; suggest alternatives and substitute language for your requested changes.

iv. Describe any assumptions and provide any technical information and/or data that you used.

v. If you estimate potential costs or burdens, explain how you arrived at your estimate in sufficient detail to allow for it to be reproduced.

vi. Provide specific examples to illustrate your concerns and suggest alternatives.

vii. Explain your views as clearly as possible, avoiding the use of profanity or personal threats.

viii. Make sure to submit your comments by the comment period deadline identified.

II. Why is EPA Taking This Action?

Section 5 of TSCA requires any person who intends to manufacture (defined by statute to include import) a new chemical (i.e., a chemical not on the TSCA Inventory to notify EPA and comply with the statutory provisions pertaining to the manufacture of new chemicals. Under sections 5(d)(2) and 5(d)(3) of TSCA, EPA is required to publish a notice of receipt of a PMN or an application for a TME and to publish periodic status reports on the chemicals

under review and the receipt of notices of commencement to manufacture those chemicals. This status report, which covers the period from April 27, 2009 through May 22, 2009, consists of the PMNs and TME, both pending or expired, and the notices of commencement to manufacture a new chemical that the Agency has received under TSCA section 5 during this time period.

III. Receipt and Status Report for PMNs

This status report identifies the PMNs and TME, both pending or expired, and the notices of commencement to manufacture a new chemical that the Agency has received under TSCA section 5 during this time period. If you are interested in information that is not included in the following tables, you may contact EPA as described in Unit I. to access additional non-CBI information that may be available.

In Table I of this unit, EPA provides the following information (to the extent that such information is not claimed as CBI) on the PMNs received by EPA during this period: the EPA case number assigned to the PMN; the date the PMN was received by EPA; the projected end date for EPA's review of the PMN; the submitting manufacturer; the potential uses identified by the manufacturer in the PMN; and the chemical identity.

I. 50 PREMANUFACTURE NOTICES RECEIVED FROM: 4/27/09 TO 5/22/09

Case No.	Received Date	Projected Notice End Date	Manufacturer/Importer	Use	Chemical
P–09–0332	04/27/09	07/25/09	CBI	(G) Open, non-dispersive (resin)	(G) Phosphonic acid ester
P–09–0333	04/29/09	07/27/09	CBI	(G) Antiswelling agent for clay	(G) Benzyl chloride quaternary of poly alkoxylated poly amine
P–09–0334	04/30/09	07/28/09	Symrise Inc.	(S) Ingredient in fragrance products	(S) 8*AH*-2,4*A*-methanonaphthalene-8*A*-ol, octahydro-1,1,5,5-tetramethyl-
P–09–0335	04/30/09	07/28/09	Rahn USA Corp.	(S) Ultra violet / eletro beam inks. The PMN substance acts as an additive in such blends; ultra violet / eletro beam coatings. The PMN substance acts as an additive in such blends; ultra violet / electro beam putty / sealent. The PMN substance acts as a reactive resin in such blends; ultra violet /eletro beam adhesives. The PMN substance acts as a reactive resin in such blends; ultra violet / eletro beam = ultra violet / electron beam reactive formulations	(G) Solution of a high molecular polymer
P–09–0336	05/01/09	07/29/09	CBI	(G) Plastic film	(G) Alkyl dioic acid polymer with alkyl diol, .alpha.-hydro-.omega.-hydroxypoly(oxy-alkyldiyl), aromatic isocyanate, alkyl diol
P–09–0337	05/01/09	07/29/09	CBI	(G) Polyol component in polyester resin synthesis - destructive use	(G) Polyol, polyester polyol
P–09–0338	05/01/09	07/29/09	CBI	(G) Polymer, binder	(G) Acrylic co-polymer
P–09–0339	05/01/09	07/29/09	CBI	(G) Open, non-dispersive use (rubber used as binder)	(G) Chlorinated rubber
P–09–0340	05/06/09	08/03/09	Cytec Industries Inc.	(G) Epoxy binding resin	(G) Alkanedioic acid, polymer with polyethylene glycol and carbomoncycle epoxy resin.
P–09–0341	05/06/09	08/03/09	CBI	(G) Industrial wood coating	(G) Multifuctional acrylate
P–09–0342	05/06/09	08/03/09	The Dow Chemical Company	(G) Stabilizer	(G) Fatty acid salt
P–09–0343	05/06/09	08/03/09	The Dow Chemical Company	(G) Stabilizer	(G) Fatty acid salt
P–09–0344	05/06/09	08/03/09	The Dow Chemical Company	(G) Stabilizer	(G) Fatty acid salt
P–09–0345	05/06/09	08/03/09	The Dow Chemical Company	(G) Stabilizer	(G) Fatty acid salt
P–09–0346	05/06/09	08/03/09	The Dow Chemical Company	(G) Stabilizer	(G) Fatty acid salt
P–09–0347	05/07/09	08/04/09	CBI	(G) Lubricant	(G) Alkyl diphenyl ether
P–09–0348	05/08/09	08/05/09	CBI	(G) Additive, open, non-dispersive use	(G) Polyether modified potassium polystyrene maleate
P–09–0349	05/08/09	08/05/09	CBI	(G) Additive, open, non-dispersive use	(G) Polyether modified fatty acid dimer
P–09–0350	05/08/09	08/05/09	Firmenich Inc	(S) Aroma for use in fragrance mixtures, which in turn are used in perfumes, soaps, cleansers, etc.	(S) Oils, evodia rutaecarpa
P–09–0351	05/08/09	08/05/09	Forbo Adhesives, LLC	(G) Hot melt adhesive	(G) Isocyanate functional polyester urethane polymer

I. 50 PREMANUFACTURE NOTICES RECEIVED FROM: 4/27/09 TO 5/22/09—Continued

Case No.	Received Date	Projected Notice End Date	Manufacturer/Importer	Use	Chemical
P–09–0352	05/07/09	08/04/09	CBI	(G) Pigment additive for industrial coatings and ink manufacture and for plastics compounding	(G) Naphthalenesulfonic acid, [(chloro-methyl-sulfophenyl)diazenyl]-hydroxy-metal salt
P–09–0353	05/07/09	08/04/09	CBI	(G) Pigment additive for industrial coatings and ink manufacture and for plastics compounding	(G) Naphthalenesulfonic acid, [(methyl-sulfophenyl)diazenyl]-hydroxy-metal salt
P–09–0354	05/07/09	08/04/09	CBI	(G) Pigment additive for industrial coatings and ink manufacture and for plastics compounding	(G) Naphthalenesulfonic acid, [(chloro-methyl-sulfophenyl)diazenyl]-hydroxy-metal salt
P–09–0355	05/07/09	08/04/09	CBI	(G) Pigment additive for industrial coatings and ink manufacture and for plastics compounding	(G) Naphthalenesulfonic acid, [(methyl-sulfophenyl)diazenyl]-hydroxy-metal salt
P–09–0356	05/11/09	08/08/09	CBI	(G) Adhesion promoter, corrosion inhibitor	(G) Zirconium lysine complex
P–09–0357	05/11/09	08/08/09	CBI	(G) Destructive use in fuels	(G) Polyester
P–09–0358	05/13/09	08/10/09	CBI	(G) Industrial cleaning solution	(G) Alkyl ammonium oxyhalide
P–09–0359	05/13/09	08/10/09	CBI	(S) Raw material used in ultra violet curable inks and coatings	(G) Methylene bis-(4-cyclohexylisocyanate), oligomeric reaction products with polyester polyol and hydroxyethyl acrylate and 2,2-bis(hydroxymethyl) propionic acid, compound with amine
P–09–0360	05/13/09	08/10/09	CBI	(S) Raw material used in ultra violet curable inks and coatings	(G) Methylene bis-(4-cyclohexylisocyanate), oligomeric reaction products with polyester polyol and hydroxyethyl acrylate and 2,2-bis(hydroxymethyl) propionic acid
P–09–0361	05/13/09	08/10/09	Sasol North America	(S) 1. Concentrate for use in emulsion polymerization to produce latex polymers; 2. Emulsion polymerization to produce latex polymers	(S) Poly(oxy-1,2-ethanediyl), .alpha.-sulfo-.omega.-(tridecyloxy)-, branched, ammonium salts
P–09–0362	05/13/09	08/10/09	Sasol North America	(S) 1. Concentrate for use in emulsion polymerization to produce latex polymers; 2. Emulsion polymerization to produce latex polymers	(S) Poly(oxy-1,2-ethanediyl), .alpha.-sulfo-.omega.-(tridecyloxy)-, branched, sodium salts
P–09–0363	05/14/09	08/11/09	CBI	(G) Additive for the leather industry	(G) Polyalkenyl derivates of aliphatic dicarboxylic anhydride, imides with melamine
P–09–0364	05/14/09	08/11/09	CBI	(G) Additive for the leather industry	(G) Alkenoic acid, polymer with alkyl alkenoates, sodium salt
P–09–0365	05/13/09	08/10/09	CBI	(G) Performance chemical for oilfield applications	(G) Oils, reaction products with amine and aldehyde
P–09–0366	05/14/09	08/11/09	CBI	(S) Intermediate product used as a component of multipurpose additive in gasoline	(G) Fatty acids, reaction products with alkanolamine
P–09–0367	05/14/09	08/11/09	CBI	(G) Multipurpose additive for gasoline	(G) Fatty acids, reaction products with alkanolamine and alkyloxide
P–09–0368	05/14/09	08/11/09	3M	(G) Monomer	(G) Fluorochemical acrylate
P–09–0369	05/15/09	08/12/09	Cytec Industries Inc.	(G) Binder for ink formulations	(G) Acrylated acrylic copolymer
P–09–0370	05/18/09	08/15/09	CBI	(S) MDI prepolymer for filter application	(G) Polyester modified mdi prepolymer
P–09–0371	05/18/09	08/15/09	CBI	(G) Destructive use	(G) Organic acid metal halide complex
P–09–0372	05/18/09	08/15/09	Firmenich Inc.	(S) Aroma for use in fragrances mixtures, which in turn are used in perfumes, soaps, cleansers, etc.	(S) Oils, spartium junceum
P–09–0373	05/19/09	08/16/09	Tessenderlo Kerley, Inc.	(S) Agricultural, to supply the micronutrient manganese to selected agricultural crops.	(S) Thiosulfuric acid (H2S2O3), manganese(2+) salt (1:1)
P–09–0374	05/19/09	08/16/09	CBI	(G) Coating additive	(G) Fatty acids, polymers with adipic acid, 1,6-hexandiol, 3-hydroxy-2-(hydroxymethyl)-2-methylpropanoic acid and 1,1′-methylenebis[4-isocyanatocyclohexane], compounds with triethylamine
P–09–0375	05/19/09	08/16/09	CBI	(G) Plasticizer for adhesive and sealant	(S) Nonadecane, 9-methylene-

I. 50 PREMANUFACTURE NOTICES RECEIVED FROM: 4/27/09 TO 5/22/09—Continued

Case No.	Received Date	Projected Notice End Date	Manufacturer/Importer	Use	Chemical
P–09–0376	05/19/09	08/16/09	CBI	(G) Viscosity adjustors	(S) Nonadecane, 9-methyl-
P–09–0377	05/19/09	08/16/09	CBI	(G) Polymer, binder	(G) Acrylic co-polymer
P–09–0378	05/20/09	08/17/09	CBI	(G) Solvent	(G) Hydrofluorocarbon
P–09–0379	05/21/09	08/18/09	Rahn USA Corp.	(S) Ultra violet / eletro beam inks. The PMN substance acts as an additive in such blends; ultra violet / eletro beam coating. The PMN substance acts as an additive in such blends; ultra violet / eletro beam = ultra violet / electron beam reactive formulations	(G) High molecular weight polyester
P–09–0380	05/21/09	08/18/09	CBI	(G) Paper coating additive	(G) Barium, dialkyl 2-sulfobutanedioate phosphate complexes
P–09–0381	05/21/09	08/18/09	CBI	(G) Binder resin for use in printing applications open/non-dispersive use	(G) Polycarbonate diol

In Table II of this unit, EPA provides the following information (to the extent that such information is not claimed as CBI) on the TMEs received:

II. 3 TEST MARKETING EXEMPTION NOTICES RECEIVED FROM: 4/27/09 TO 5/22/09

Case No.	Received Date	Projected Notice End Date	Manufacturer/Importer	Use	Chemical
T–09–0009	05/05/09	06/18/09	Forbo Adhesives, LLC	(G) Liquid polyurethane adhesive	(G) Isocyanate functional urethane polymer
T–09–0010	05/06/09	06/19/09	Cytec Industries Inc.	(G) Epoxy binding resin	(G) Alkanedioic acid, polymer with polyethylene glycol and carbomoncycle epoxy resin.
T–09–0011	05/15/09	06/28/09	Cytec Industries Inc.	(G) Binder for ink formulations	(G) Acrylated acrylic copolymer

In Table III of this unit, EPA provides the following information (to the extent that such information is not claimed as CBI) on the Notices of Commencement to manufacture received:

III. 18 NOTICES OF COMMENCEMENT FROM: 4/27/09 TO 5/22/09

Case No.	Received Date	Commencement Notice End Date	Chemical
P–05–0198	04/29/09	03/24/09	(G) Quaternized styrene polymer
P–06–0036	05/07/09	04/11/09	(G) Rutile, tin zinc
P–06–0037	05/07/09	04/11/09	(G) Rutile, tin zinc
P–06–0405	04/29/09	04/10/09	(G) Alkanoylamide
P–06–0742	04/29/09	04/06/09	(G) Amines branched and linear alkyl
P–07–0234	04/29/09	03/30/09	(G) Acrylic esters
P–08–0154	05/20/09	04/29/09	(G) Polymer of fatty acids methyl esters hydroformylation products, hydrogenated, with alkylene oxides
P–08–0234	05/04/09	04/20/09	(G) Bisphenol A - epichlorohydrin amine copolymer
P–08–0313	05/04/09	04/21/09	(G) Alkylene siloxanes and silicones reaction products with siloxanes and silicones
P–08–0475	05/06/09	04/09/09	(G) Vinyl acetate - acrylic copolymer
P–08–0511	05/08/09	04/27/09	(G) Modified acrylonitrile, butadiene polymer, hydrogenated
P–08–0520	05/05/09	04/15/09	(G) Aromatic isocyanate
P–08–0527	05/06/09	04/03/09	(G) Vinyl acetate - acrylic copolymer
P–08–0657	05/20/09	05/02/09	(G) Fatty acids, C_{18}-unsaturated, dimers, polymers with diamines and monoacids
P–08–0679	04/28/09	04/16/09	(G) Furandione polymer with ethenylbenzene, alkyl ester
P–08–0691	04/27/09	04/14/09	(G) Vinyl acetate copolymer
P–09–0105	04/30/09	04/06/09	(G) Halo substituted benzonitrile
P–09–0130	05/19/09	05/08/09	(S) Soybean oil, epoxidized, reaction products with diethanolamine
P–09–0178	05/06/09	04/29/09	(G) Fatty acids, dimers, polymers with alkane diol, dihydroxyfunctional monocarboxylic acid, alkyl isocyanate, alkanediol, aromatic anhydride, glycol ether and alkanetriol, compounds with amino alcohol

III. 18 NOTICES OF COMMENCEMENT FROM: 4/27/09 TO 5/22/09—Continued

Case No.	Received Date	Commencement Notice End Date	Chemical
P–09–0181	05/14/09	05/06/09	(G) Dimer fatty acids, polymers with alkane diol, alkyl glycol, carboxylic acid anhydride, glycol ether and alcohol

List of Subjects

Environmental protection, Chemicals, Premanufacturer notices.

Dated: June 16, 2009.

Chandler Sirmons,

Acting Director, Information Management Division, Office of Pollution Prevention and Toxics.

[FR Doc. E9–14700 Filed 6–22–09; 8:45 am]

BILLING CODE 6560–50–S

ENVIRONMENTAL PROTECTION AGENCY

[FRL–8922–3]

Proposed Consent Decree, Clean Air Act Citizen Suit

AGENCY: Environmental Protection Agency.

ACTION: Notice of Proposed Consent Decree; Request for Public Comment.

SUMMARY: In accordance with section 113(g) of the Clean Air Act, as amended (''CAA'' or ''Act''), 42 U.S.C. 7413(g), notice is hereby given of a proposed consent decree to address a lawsuit filed by Wildearth Guardians in the United States District Court for the District of Columbia: *Wildearth Guardians* v. *Jackson,* No.1:08-cv-02253, (D. D.C.). Wildearth Guardians filed a deadline suit to compel the Administrator to respond to an administrative petition seeking EPA's objection to a CAA Title V operating permit issued by the Colorado Department of Public Health and the Environment, Air Pollution Control Division to Anadarko Petroleum Corporation to operate their Frederick Natural Gas Compressor Station in Weld County, Colorado. Under the terms of the proposed consent decree, EPA has agreed to respond to the petition by September 14, 2009.

DATES: Written comments on the proposed consent decree must be received by *July 23, 2009.*

ADDRESSES: Submit your comments, identified by Docket ID number EPA–HQ–OGC–2009–0355, online at *http://www.regulations.gov* (EPA's preferred method); by e-mail to *oei.docket@epa.gov;* by mail to EPA Docket Center, Environmental Protection Agency, Mailcode: 2822T, 1200 Pennsylvania Ave., NW., Washington, DC 20460–0001; or by hand delivery or courier to EPA Docket Center, EPA West, Room 3334, 1301 Constitution Ave., NW., Washington, DC, between 8:30 a.m. and 4:30 p.m. Monday through Friday, excluding legal holidays. Comments on a disk or CD–ROM should be formatted in Word or ASCII file, avoiding the use of special characters and any form of encryption, and may be mailed to the mailing address above.

FOR FURTHER INFORMATION CONTACT: Sheila Igoe, Office of General Counsel (Mail Code 2344A), U.S. Environmental Protection Agency, 1200 Pennsylvania Ave., NW., Washington, DC 20460; telephone: (202) 564–5513; fax number (202) 564–5603; e-mail address: *igoe.sheila@epa.gov.*

SUPPLEMENTARY INFORMATION:

I. Additional Information About the Proposed Consent Decree

This proposed consent decree would resolve a lawsuit seeking a response to an administrative petition to object to a CAA Title V permit issued by the Colorado Department of Public Health and the Environment, Air Pollution Control Division to Anadarko Petroleum Corporation to operate their Frederick Natural Gas Compressor Station in Weld County, Colorado. Under the terms of the proposed consent decree, EPA has agreed to respond to the petition by September 14, 2009. In addition, the proposed consent decree states that within fifteen (15) business days EPA shall deliver notice of such action to the Office of the Federal Register for prompt publication.

For a period of thirty (30) days following the date of publication of this notice, the Agency will accept written comments relating to the proposed consent decree from persons who were not named as parties or intervenors to the litigation in question. EPA or the Department of Justice may withdraw or withhold consent to the proposed consent decree if the comments disclose facts or considerations that indicate that such consent is inappropriate, improper, inadequate, or inconsistent with the requirements of the Act. Unless EPA or the Department of Justice determines, based on any comment submitted, that consent to this consent decree should be withdrawn, the terms of the decree will be affirmed.

II. Additional Information About Commenting on the Proposed Consent Decree

A. How Can I Get a Copy of the Consent Decree?

The official public docket for this action (identified by Docket ID No. EPA–HQ–OGC–2009–0355) contains a copy of the proposed consent decree. The official public docket is available for public viewing at the Office of Environmental Information (OEI) Docket in the EPA Docket Center, EPA West, Room 3334, 1301 Constitution Ave., NW., Washington, DC. The EPA Docket Center Public Reading Room is open from 8:30 a.m. to 4:30 p.m., Monday through Friday, excluding legal holidays. The telephone number for the Public Reading Room is (202) 566–1744, and the telephone number for the OEI Docket is (202) 566–1752.

An electronic version of the public docket is available through *http://www.regulations.gov.* You may use the *http://www.regulations.gov* to submit or view public comments, access the index listing of the contents of the official public docket, and to access those documents in the public docket that are available electronically. Once in the system, select ''search,'' then key in the appropriate docket identification number.

It is important to note that EPA's policy is that public comments, whether submitted electronically or in paper, will be made available for public viewing online at *http://www.regulations.gov* without change, unless the comment contains copyrighted material, CBI, or other information whose disclosure is restricted by statute. Information claimed as CBI and other information whose disclosure is restricted by statute is not included in the official public docket or in the electronic public docket. EPA's policy is that copyrighted material, including copyrighted material contained in a public comment, will not be placed in EPA's electronic public docket but will be available only in printed, paper form in the official public docket. Although not all docket

materials may be available electronically, you may still access any of the publicly available docket materials through the EPA Docket Center.

B. How and to Whom Do I Submit Comments?

You may submit comments as provided in the **ADDRESSES** section. Please ensure that your comments are submitted within the specified comment period. Comments received after the close of the comment period will be marked ''late.'' EPA is not required to consider these late comments.

If you submit an electronic comment, EPA recommends that you include your name, mailing address, and an e-mail address or other contact information in the body of your comment and with any disk or CD ROM you submit. This ensures that you can be identified as the submitter of the comment and allows EPA to contact you in case EPA cannot read your comment due to technical difficulties or needs further information on the substance of your comment. Any identifying or contact information provided in the body of a comment will be included as part of the comment that is placed in the official public docket, and made available in EPA's electronic public docket. If EPA cannot read your comment due to technical difficulties and cannot contact you for clarification, EPA may not be able to consider your comment.

Use of the *http://www.regulations.gov* Web site to submit comments to EPA electronically is EPA's preferred method for receiving comments. The electronic public docket system is an ''anonymous access'' system, which means EPA will not know your identity, e-mail address, or other contact information unless you provide it in the body of your comment. In contrast to EPA's electronic public docket, EPA's electronic mail (e-mail) system is not an ''anonymous access'' system. If you send an e-mail comment directly to the Docket without going through *http://www.regulations.gov,* your e-mail address is automatically captured and included as part of the comment that is placed in the official public docket, and made available in EPA's electronic public docket.

Dated: June 16, 2009.

Richard B. Ossias,

Associate General Counsel.

[FR Doc. E9–14710 Filed 6–22–09; 8:45 am]

BILLING CODE 6560–50–P

ENVIRONMENTAL PROTECTION AGENCY

[FRL–8921–8]

Science Advisory Board Staff Office Notification of an Upcoming Meeting of the Science Advisory Board Ecological Processes and Effects Committee

AGENCY: Environmental Protection Agency (EPA).

ACTION: Notice.

SUMMARY: The Environmental Protection Agency (EPA or Agency) Science Advisory Board (SAB) Staff Office announces a public meeting of the SAB Ecological Processes and Effects Committee to provide advice on EPA's implementation of the Ecosystem Services Research Program.

DATES: The meeting dates are Tuesday, July 14, 2009 from 9 a.m. to 5 p.m. (Eastern Time) and Wednesday, July 15, 2009 from 8:30 a.m. to 12 noon (Eastern Time).

ADDRESSES: The meeting will be held at the SAB Conference Center, 1025 F Street, NW., Room 3705, Washington, DC 20004.

FOR FURTHER INFORMATION CONTACT: Members of the public who wish to obtain further information about this meeting must contact Dr. Thomas Armitage, Designated Federal Officer (DFO). Dr. Armitage may be contacted at the EPA Science Advisory Board (1400F), U.S. Environmental Protection Agency, 1200 Pennsylvania Avenue, NW., Washington, DC 20460; or via telephone/voice mail; (202) 343–9995; fax (202) 233–0643; or e-mail at *armitage.thomas@epa.gov.* Any inquiry regarding EPA's Ecosystem Services Research Program should be directed to Dr. Rick Linthurst of EPA's Office of Research and Development at *linthurst.rick@epa.gov* or (919) 541–4909. General information about the EPA SAB, as well as any updates concerning the meeting announced in this notice, may be found on the SAB Web site at *http://www.epa.gov/sab.*

SUPPLEMENTARY INFORMATION: Pursuant to the Federal Advisory Committee Act, Public Law 92–463, notice is hereby given that the SAB Ecological Processes and Effects Committee will hold a public meeting to provide consultative comment on implementation of EPA's Ecosystem Services Research Program. The SAB was established by 42 U.S.C. 4365 to provide independent scientific and technical advice to the Administrator on the technical basis for Agency positions and regulations. The SAB is a Federal Advisory Committee chartered under the Federal Advisory Committee Act (FACA), as amended, 5 U.S.C., App. 2. The SAB will comply with the provisions of FACA and all appropriate SAB Staff Office procedural policies.

Background: In February 2008, The EPA Office of Research and Development (ORD) released a draft Ecological Research Program Multi-Year Plan that established EPA's long-term and annual goals for ecological research. This draft Multi-Year Plan is available on the EPA Office of Research and Development Web site at *http://epa.gov/ord/esrp/pdfs/ERP–MYP-complete-draft-v5.pdf.* The Multi-Year Plan described a new direction for the Agency's Ecological Research Program intended to fill the need for a better understanding of the implications of human impacts on ecosystems and the services they provide. The redirected Ecological Research Program is building on past research efforts in ecosystem monitoring, restoration, and functioning to develop operational methods for incorporating quantitative information on ecosystem services into decision making.

In 2008 the SAB Ecological Processes and Effects Committee reviewed EPA's draft Ecological Research Program Multi-year Plan. The findings and recommendations of that SAB review are available on the SAB Web site at *http://www.epa.gov/sab* (*see* report EPA–SAB–08–011). The SAB Staff Office selected several additional SAB committee members with expertise in valuing ecosystem services to augment the expertise on the Ecological Processes and Effects Committee for that advisory activity.

The ORD has requested further consultation with the SAB regarding the implementation of the Ecosystem Services Research program. This consultation will be conducted by the augmented SAB Ecological Processes and Effects Committee. The purpose of the upcoming meeting of this Committee is to provide consultative advice on the current direction of high priority areas of the Ecosystem Services Research Program and the specific research projects that have been undertaken. The roster and biosketches of Committee members are posted on the SAB Web site at *http://www.epa.gov/sab.*

Availability of Meeting Materials: The meeting agenda, charge to the SAB Committee, and other meeting material will be posted on the SAB Web site at *https://www.epa.gov/sab* in advance of the meeting.

Procedures for Providing Public Input: Interested members of the public may submit relevant written or oral

information on the topic of this advisory activity, and/or the group conducting the activity, for the SAB to consider during the advisory process.

Oral Statements: In general, individuals or groups requesting an oral presentation at a public meeting will be limited to five minutes per speaker, with no more than a total of one hour for all speakers. Interested parties should contact Dr. Armitage, DFO, in writing (preferably via e-mail) at the contact information noted above by July 6, 2009 to be placed on a list of public speakers for the meeting. *Written Statements:* Written statements should be received in the SAB Staff Office by July 6, 2009 so that the information may be made available to the SAB Committee members for their consideration. Written statements should be supplied to the DFO in the following formats: one hard copy with original signature, and one electronic copy via e-mail (acceptable file format: Adobe Acrobat PDF, WordPerfect, MS Word, MS PowerPoint, or Rich Text files in IBM–PC/Windows 98/2000/XP format). Submitters are requested to provide two versions of each document submitted with and without signatures, because the SAB Staff Office does not publish documents with signatures on its Web sites.

Accessibility: For information on access or services for individuals with disabilities, please contact Dr. Armitage at the phone number or e-mail address noted above, preferably at least ten days prior to the meeting to give EPA as much time as possible to process your request.

Dated: June 16, 2009.

Anthony F. Maciorowski,

Deputy Director, EPA Science Advisory Board Staff Office.

[FR Doc. E9–14713 Filed 6–22–09; 8:45 am]

BILLING CODE 6560–50–P

ENVIRONMENTAL PROTECTION AGENCY

[FRL–8921–9]

Science Advisory Board Staff Office; Clean Air Scientific Advisory Committee (CASAC); NO_x & SO_x Secondary NAAQS Review Panel Meeting and CASAC Teleconference

AGENCY: Environmental Protection Agency (EPA).

ACTION: Notice.

SUMMARY: The Environmental Protection Agency (EPA) Science Advisory Board (SAB) Staff Office announces a public meeting of the Clean Air Scientific Advisory Committee Oxides of Nitrogen (NO_x) and Sulfur Oxides (SO_x) Secondary National Ambient Air Quality Standards (NAAQS) Review Panel (CASAC Panel) to peer review EPA's *Risk and Exposure Assessment for Review of the Secondary National Ambient Air Quality Standards for Oxides of Nitrogen and Oxides of Sulfur: Second Draft (EPA–452/P–09–004a).* The chartered CASAC will subsequently hold a public teleconference to review and approve the Panel's report.

DATES: The CASAC Panel will meet from 8:30 a.m. Wednesday, July 22, 2009 through 3 p.m. Thursday, July 23, 2009 (Eastern Time). The chartered CASAC will meet by public teleconference from 10 a.m. to 12 p.m. on August 20, 2009 (Eastern Time).

Location: The July 22–23, 2009 public meeting will take place at the Marriott at Research Triangle Park, 4700 Guardian Drive, Durham, NC 27703, telephone (919) 941–6200. The August 20, 2009 public teleconference will be conducted by telephone only.

FOR FURTHER INFORMATION CONTACT: Any member of the public who wishes to submit a written or brief oral statement or wants further information concerning the July 22–23, 2009 meeting may contact Ms. Kyndall Barry, Designated Federal Officer (DFO), EPA Science Advisory Board (1400F), U.S. Environmental Protection Agency, 1200 Pennsylvania Avenue, NW., Washington, DC 20460; via telephone/voice mail (202) 343–9868; fax (202) 233–0643; or e-mail at *barry.kyndall@epa.gov.* For information on the CASAC teleconference on August 20, 2009, please contact Dr. Holly Stallworth, Designated Federal Officer (DFO), at the above listed address; via telephone/voice mail (202) 343–9867 or e-mail at *stallworth.holly@epa.gov.* General information concerning the CASAC and the CASAC documents can be found on the EPA Web site at *http://www.epa.gov/casac.*

SUPPLEMENTARY INFORMATION:

Background: Pursuant to the Federal Advisory Committee Act, Public Law 92–463 5 U.S.C., App. 2 (FACA), notice is hereby given that a CASAC Panel will hold a public meeting to peer review EPA's *Risk and Exposure Assessment for Review of the Secondary National Ambient Air Quality Standards for Oxides of Nitrogen and Oxides of Sulfur: Second Draft* and that the chartered CASAC will hold a public teleconference to review and approve the Panel's draft report. The CASAC was established under section 109(d)(2) of the Clean Air Act (CAA or Act) (42 U.S.C. 7409) as an independent scientific advisory committee. CASAC provides advice, information and recommendations on the scientific and technical aspects of air quality criteria and national ambient air quality standards (NAAQS) under sections 108 and 109 of the Act. The CASAC and CASAC Panel will comply with the provisions of FACA and all appropriate SAB Staff Office procedural policies.

Section 109(d)(1) of the CAA requires that the Agency periodically review and revise, as appropriate, the air quality criteria and the NAAQS for the six ''criteria'' air pollutants, including NO_x and SO_x. EPA is in the process of reviewing the secondary NAAQS for NO_x and SO_x. Welfare effects as defined in the CAA include, but are not limited to, effects on soils, water, wildlife, vegetation, visibility, weather, and climate, as well as effects on materials, economic values, and personal comfort and well-being.

CASAC has previously provided consultative advice on EPA's *Draft Plan for Review of the Secondary National Ambient Air Quality Standards for Nitrogen Dioxide and Sulfur Dioxide* and conducted peer reviews of the first and second drafts of EPA's *Integrated Science Assessment fox Oxides of Nitrogen and Sulfur—Environmental Criteria.* CASAC also provided consultative advice on EPA's *Scope and Methods Plan for Risk/Exposure Assessment* and conducted a peer review of EPA's *Risk and Exposure Assessment for Review of the Secondary National Ambient Air Quality Standards for Oxides of Nitrogen and Oxides of Sulfur: First Draft.* The CASAC advisory reports are available on the EPA Web site at *http://www.epa.gov/casac.*

The purpose of the July 22–23, 2009 meeting is for the CASAC Panel to conduct a peer review of EPA's *Risk and Exposure Assessment for Review of the Secondary National Ambient Air Quality Standards for Oxides of Nitrogen and Oxides of Sulfur: Second Draft.* The chartered CASAC will review and approve the Panel's draft report on the REA by public conference call on August 20, 2009.

Technical Contacts: Any questions concerning EPA's *Risk and Exposure Assessment for Review of the Secondary National Ambient Air Quality Standards for Oxides of Nitrogen and Oxides of Sulfur: Second Draft* should be directed to Dr. Anne Rea, OAR, by telephone at (919) 541–0053, or e-mail *rea.anne@epa.gov.*

Availability of Meeting Materials: EPA–OAR's *Risk and Exposure Assessment for Review of the Secondary*

National Ambient Air Quality Standards for Oxides of Nitrogen and Oxides of Sulfur: Second Draft can be accessed at *http://www.epa.gov/ttn/naaqs/standards/no2so2sec/cr_rea.html.* The agenda and other materials for the CASAC meetings will be posted on the SAB Web site at *http://www.epa.gov/casac.*

Procedures for Providing Public Input: Interested members of the public may submit relevant written or oral information for consideration on the topics included in this advisory activity. *Oral Statements:* In general, individuals or groups requesting an oral presentation at the public meeting will be limited to five minutes per speaker, with no more than a total of one hour for all speakers. Public statements during the teleconference will be limited to three minutes per speaker, with no more than a total of thirty minutes for all speakers. To be placed on the public speaker list for the July 22–23, 2009 meeting, interested parties should notify Ms. Kyndall Barry, DFO, by e-mail no later than July 17, 2009. To be placed on the public speaker list for the August 20, 2009 teleconference, interested parties should notify Dr. Holly Stallworth, DFO, by e-mail no later than August 14, 2009. *Written Statements:* Written statements for the July 22–23, 2009 received in the SAB Staff Office by July 17, 2009, so that the information may be made available to the CASAC Panel for its consideration prior to this meeting. For the teleconference meeting of the chartered CASAC on August 20, 2009, statements should be received in the SAB Staff Office by August 14, 2009. Written statements should be supplied to the appropriate DFO in the following formats: one hard copy with original signature and one electronic copy via e-mail (acceptable file format: Adobe Acrobat PDF, MS Word, WordPerfect, MS PowerPoint, or Rich Text files in IBM–PC/Windows 98/2000/XP format). Submitters are requested to provide versions of each document submitted with and without signatures, because the SAB Staff Office does not publish documents with signatures on its Web sites.

Accessibility: For information on access or services for individuals with disabilities, please contact Ms. Barry at the phone number or e-mail address noted above, preferably at least ten days prior to the face-to-face meeting, to give EPA as much time as possible to process your request.

Dated: June 17, 2009.

Anthony F. Maciorowski,

Deputy Director, EPA Science Advisory Board Staff Office.

[FR Doc. E9–14712 Filed 6–22–09; 8:45 am]

BILLING CODE 6560–50–P

ENVIRONMENTAL PROTECTION AGENCY

[EPA–HQ–OAR–2009–0372; FRL–8921–7]

Proposed Approval of the Central Characterization Project's Remote-Handled Transuranic Waste Characterization Program at General Electric Vallecitos Nuclear Center

AGENCY: Environmental Protection Agency.

ACTION: Notice of availability; opening of public comment period.

SUMMARY: The Environmental Protection Agency (EPA or the Agency) is announcing the availability of, and soliciting public comments for 45 days on, the proposed approval of the radioactive, remote-handled (RH), transuranic (TRU) waste characterization program implemented by the Central Characterization Project (CCP) at General Electric Vallecitos Nuclear Center in Sunol, California. This waste is intended for disposal at the Waste Isolation Pilot Plant (WIPP) in New Mexico.

In accordance with the WIPP Compliance Criteria, EPA evaluated the characterization of RH TRU debris waste from GEVNC–CCP during an inspection conducted on December 2–4, 2008. Using the systems and processes developed as part of the U.S. Department of Energy's (DOE's) Carlsbad Field Office (CBFO) program, EPA verified whether DOE could adequately characterize RH TRU waste, consistent with the Compliance Criteria. The results of EPA's evaluation of GEVNC–CCP's RH program and its proposed approval are described in the Agency's inspection report, which is available for review in the public dockets listed in **ADDRESSES**. We will consider public comments received on or before the due date mentioned in **DATES**.

This notice summarizes the waste characterization processes evaluated by EPA and EPA's proposed approval. As required by the 40 CFR 194.8, at the end of a 45-day comment period EPA will evaluate public comments received, and if appropriate, finalize the reports responding to the relevant public comments, and issue a final report and approval letter to DOE.

DATES: Comments must be received on or before August 7, 2009.

ADDRESSES: Submit your comments, identified by Docket ID No. EPA–HQ–OAR–2009–0372, by one of the following methods:

- *http://www.regulations.gov:* Follow the on-line instructions for submitting comments.
- *E-mail:* to *a-and-r-docket@epa.gov*.
- *Fax:* 202–566–1741.
- *Mail:* Air and Radiation Docket and Information Center, Environmental Protection Agency, Mailcode: 6102T, 1200 Pennsylvania Ave., NW., Washington, DC 20460.

Instructions: Direct your comments to Attn: Docket ID No. EPA–HQ–OAR–2009–0372. The Agency's policy is that all comments received will be included in the public docket without change and may be made available online at *http://www.regulations.gov,* including any personal information provided, unless the comment includes information claimed to be Confidential Business Information (CBI) or other information whose disclosure is restricted by statute. Do not submit information that you consider to be CBI or otherwise protected through *http://www.regulations.gov* or e-mail. The *http://www.regulations.gov* Web site is an ''anonymous access'' system, which means EPA will not know your identity or contact information unless you provide it in the body of your comment. If you send an e-mail comment directly to EPA without going through *http://www.regulations.gov* your e-mail address will be automatically captured and included as part of the comment that is placed in the public docket and made available on the Internet. If you submit an electronic comment, EPA recommends that you include your name and other contact information in the body of your comment and with any disk or CD–ROM you submit. If EPA cannot read your comment due to technical difficulties and cannot contact you for clarification, EPA may not be able to consider your comment. Electronic files should avoid the use of special characters, any form of encryption, and be free of any defects or viruses. For additional information about EPA's public docket visit the EPA Docket Center homepage at *http://www.epa.gov/epahome/dockets.htm.*

Docket: All documents in the docket are listed in the *http://www.regulations.gov* index. Although listed in the index, some information is not publicly available, *e.g.,* CBI or other information whose disclosure is restricted by statute. Certain other material, such as copyrighted material,

will be publicly available only in hard copy. Publicly available docket materials are available either electronically at *http://www.regulations.gov.* As provided in EPA's regulations at 40 CFR part 2, and in accordance with normal EPA docket procedures, if copies of any docket materials are requested, a reasonable fee may be charged for photocopying.

FOR FURTHER INFORMATION CONTACT: Rajani Joglekar or Ed Feltcorn, Radiation Protection Division, Center for Waste Management and Regulations, Mail Code 6608J, U.S. Environmental Protection Agency, 1200 Pennsylvania Avenue, Washington, DC 20460; *telephone number:* 202–343–9601; *fax number:* 202–343–2305; *e-mail address:* <*joglekar.rajani@epa.gov*> or <*feltcorn.ed@epa.gov*>.

SUPPLEMENTARY INFORMATION:

I. General Information

A. What Should I Consider as I Prepare My Comments for EPA?

1. *Submitting CBI.* Do not submit this information to EPA through *http://www.regulations.gov* or e-mail. Clearly mark the part or all of the information that you claim to be CBI. For CBI information in a disk or CD–ROM that you mail to EPA, mark the outside of the disk or CD–ROM as CBI and then identify electronically within the disk or CD–ROM the specific information that is claimed as CBI. In addition to one complete version of the comment that includes information claimed as CBI, a copy of the comment that does not contain the information claimed as CBI must be submitted for inclusion in the public docket. Information so marked will not be disclosed except in accordance with procedures set forth in 40 CFR part 2.

2. *Tips for Preparing Your Comments.* When submitting comments, remember to:

- Identify the rulemaking by docket number and other identifying information (subject heading, **Federal Register** date and page number).
- Follow directions—The agency may ask you to respond to specific questions or organize comments by referencing a Code of Federal Regulations (CFR) part or section number.
- Explain why you agree or disagree; suggest alternatives and substitute language for your requested changes.
- Describe any assumptions and provide any technical information and/or data that you used.
- If you estimate potential costs or burdens, explain how you arrived at your estimate in sufficient detail to allow for it to be reproduced.
- Provide specific examples to illustrate your concerns, and suggest alternatives.
- Explain your views as clearly as possible, avoiding the use of profanity or personal threats.
- Make sure to submit your comments by the comment period deadline identified.

II. Background

DOE is developing the WIPP, near Carlsbad in southeastern New Mexico, as a deep geologic repository for disposal of TRU radioactive waste. As defined by the WIPP Land Withdrawal Act (LWA) of 1992 (Pub. L. No. 102–579), as amended (Pub. L. No. 104–201), TRU waste consists of materials with radionuclides that have atomic numbers greater than 92 (with half-lives greater than twenty years), in concentrations greater than 100 nanocuries of alpha-emitting TRU isotopes per gram of waste. Much of the existing TRU waste consists of items contaminated during the production of nuclear weapons, such as rags, equipment, tools, and sludges.

TRU waste is itself divided into two categories, based on its level of radioactivity. Contact-handled (CH) TRU waste accounts for about 97 percent of the volume of TRU waste currently destined for the WIPP. It is packaged in 55-gallon metal drums or in metal boxes and can be handled under controlled conditions without any shielding beyond the container itself. The maximum radiation dose at the surface of a CH TRU waste container is 200 millirems per hour. CH waste primarily emits alpha particles that are easily shielded by a sheet of paper or the outer layer of a person's skin.

Remote-handled (RH) TRU waste emits more radiation than CH TRU waste and must therefore be both handled and transported in specially shielded containers. Surface radiation levels of unshielded containers of remote-handled transuranic waste exceed 200 millirems per hour. RH waste primarily emits gamma radiation, which is very penetrating and requires concrete, lead, or steel to block it.

On May 13, 1998, EPA issued a final certification of compliance for the WIPP facility. The final rule was published in the **Federal Register** on May 18, 1998 (63 FR 27354). EPA officially recertified WIPP on March 29, 2006 (71 FR 18015). Both the certification and recertification determined that WIPP complies with the Agency's radioactive waste disposal regulations at 40 CFR part 191, subparts B and C, and is therefore safe to contain TRU waste.

The final WIPP certification decision includes conditions that (1) prohibit shipment of TRU waste for disposal at WIPP from any site other than the Los Alamos National Laboratories (LANL) until the EPA determines that the site has established and executed a quality assurance program, in accordance with 194.22(a)(2)(i), 194.24(c)(3), and 194.24(c)(5) for waste characterization activities and assumptions (Condition 2 of Appendix A to 40 CFR part 194); and (2) (with the exception of specific, limited waste streams and equipment at LANL) prohibit shipment of TRU waste for disposal at WIPP (from LANL or any other site) until EPA has approved the procedures developed to comply with the waste characterization requirements of 194.22(c)(4) (Condition 3 of Appendix A to 40 CFR part 194). The EPA's approval process for waste generator sites is described in Section 194.8 (revised July 2004).

Condition 3 of the WIPP Certification Decision requires EPA to conduct independent inspections at DOE's waste generator/storage sites of their TRU waste characterization capabilities before approving their program and the waste for disposal at the WIPP. EPA's inspection and approval process gives EPA (a) discretion in establishing technical priorities, (b) the ability to accommodate variation in the site's waste characterization capabilities, and (c) flexibility in scheduling site waste characterization inspections.

As described in Section 194.8(b), EPA's baseline inspections evaluate each waste characterization process component (equipment, procedures, and personnel training/experience) for its adequacy and appropriateness in characterizing TRU waste destined for disposal at WIPP. During an inspection, the site demonstrates its capabilities to characterize TRU waste(s) and its ability to comply with the regulatory limits and tracking requirements under 194.24. A baseline inspection may describe any limitations on approved waste streams or waste characterization processes [§ 194.8(b)(2)(iii)]. In addition, a baseline inspection approval must specify what subsequent waste characterization program changes or expansion should be reported to EPA [§ 194.8(b)(4)]. The Agency is required to assign Tier 1 (T1) and Tier 2 (T2) designations to the reportable changes depending on their potential impact on data quality. A T1 designation requires that the site must notify EPA of proposed changes to the approved components of an individual waste characterization process (such as radioassay equipment or personnel), and EPA must also approve the change

before it can be implemented. A waste characterization element with a T2 designation allows the site to implement changes to the approved components of individual waste characterization processes (such as visual examination procedures) but requires EPA notification. The Agency may choose to inspect the site to evaluate technical adequacy before approval. EPA inspections conducted to evaluate T1 or T2 changes are follow-up inspections under the authority of § 194.24(h). In addition to the follow-up inspections, if warranted, EPA may opt to conduct continued compliance inspections at TRU waste sites with a baseline approval under the authority of § 194.24(h).

The site inspection and approval process outlined in § 194.8 requires EPA to issue a **Federal Register** notice proposing the baseline compliance decision, docket the inspection report for public review, and seek public comment on the proposed decision for a period of 45 days. The report must describe the waste characterization processes EPA inspected at the site, as well as their compliance with § 194.24 requirements.

III. Proposed Baseline Compliance Decision

EPA has performed a baseline inspection of RH TRU waste characterization activities at GEVNC–CCP (EPA Inspection No. EPA–GEVNC–CCP–RH–12.08–8). The purpose of EPA's inspection was to verify that the waste characterization program implemented at GEVNC–CCP for characterizing RH TRU, retrievably-stored, debris waste is technically adequate and meets the regulatory requirements at 40 CFR 194.24.

The RH waste that DOE is proposing for WIPP disposal is from the decontamination and demolition (D&D) of Hot Cell 4 in Building 102 at GEVNC between 2008 and 2009. The hot cells were used primarily for non-destructive examination of fuel materials and the production of radionuclide sources. The examinations consisted mainly of post-irradiation examination (PIE) of uranium fuel and reactor components until 1982. Since then, the hot cell has been used for the production of radionuclide sources.

Initially, CCP was not prepared for the EPA inspection and did not provide sufficient objective evidence for the Agency's evaluation during the inspection. This resulted in EPA identifying several significant issues. EPA concluded that the inspection could not be completed and that extensive documentation revisions were necessary. In early 2009, CCP provided revised documentation in the form of additional technical information and objective evidence in response to the outstanding issues EPA had identified previously. These are discussed in EPA's GEVNC Inspection Report (EPA DOCKET NO: A–98–49, II–A4–113) available in the regulatory docket accompanying this FR notice.

The inspection scope covered only one RH waste stream (GEVNC.01); no additional RH TRU waste is to be generated during the D&D of the Hot Cell 4. This inspection's focus was to evaluate the acceptable knowledge (AK) records that had been assembled to document RH TRU WC activities, in conjunction with the development of scaling factors, dose-to-curie (DTC) and visual examination (VE) to confirm physical and radiological contents of individual TRU RH debris waste containers, and the use of the WIPP Waste Information System (WWIS) to report and track waste information. This inspection was similar to previous EPA inspections of CCP WC activities at RH waste sites (see Air Docket Nos. A–98–49, II–A4–72; A–98–49, II–A4–73; A–98–49, II–A4–96; A–98–49, II–A4–104; and A–98–49, II–A4–111). Today's proposed baseline approval, therefore, is limited to one retrievably-stored RH TRU debris waste stream (GEVNC.01).

The EPA inspection team identified one finding and five concerns related to WC processes GEVNC–CCP implemented to characterize RH debris waste (see Attachments B.1 through B.6 of the accompanying inspection report). GEVNC–CCP revised a number of specific documents to address the EPA finding and concerns.

After reviewing the documents provided by DOE through early 2009, EPA determined that the GEVNC–CCP RH WC program was technically adequate and that all concerns have been resolved. Therefore, EPA is proposing to approve the following GEVNC–CCP RH WC program components implemented to characterize GEVNC RH Waste Stream GEVNC.01 only:

(1) The AK process for the RH TRU debris waste stream designated as Waste Stream GEVNC.01 generated during the D&D of Hot Cell 4

(2) The radiological characterization process using DTC and scaling factors for assigning radionuclide values to Waste Stream GEVNC.01 that is documented in CCP–AK–GEV–501, Revision 1, as supported by the revised calculation packages and detailed in EPA's GEVNC Inspection Report mentioned above

(3) The VE process to identify waste material parameters (WMPs) and the physical form of the waste

(4) The WWIS to submit data for both characterization and certification for RH TRU waste

(5) The attainment of pertinent data quality objectives (DQOs)

Since all the RH waste at GEVNC is only one debris waste stream from D&D activities, no Tier 1 (T1) changes for the EPA-evaluated waste characterization components are needed. No additional RH TRU debris waste streams requiring characterization by CCP for disposal at the Waste Isolation Pilot Plant will be generated. Following an EPA inspection, CCP and other TRU sites routinely revise WC procedures as additional waste containers are characterized and waste-related information is generated. EPA refers to these changes as Tier 2 (T2) changes that require EPA review at regular intervals. The waste stream at GEVNC to be disposed of at the WIPP is of limited volume, and as of the date of this proposed report, more than 75% of the waste has been characterized and packaged. Soon after the CBFO issues a certification, all of the RH TRU waste will be disposed. No additional RH debris waste characterization will occur once the debris from D&D activity is characterized and disposed of at WIPP. The quarterly notification of T2 changes required of other waste characterization sites is not applicable to GEVNC–CCP. In lieu of a quarterly T2 changes submission, however, a one-time T2 information submission to EPA will be necessary. Therefore, no later than four weeks after the last shipment of RH debris waste from the site, GEVNC–CCP must provide applicable T2 changes included in Table 1 below to EPA for review.

GEVNC has indicated that a small quantity of debris from the D&D operation may qualify as contact-handled (CH) TRU debris (i.e., not meeting the external dose rate criterion for RH TRU). It is expected that GEVNC–CCP will ship these CH debris containers to CCP at the Idaho National Laboratory (INL–CCP) for characterization as CH waste prior to disposal at the WIPP. EPA notification prior to shipment concerning these CH waste containers is necessary. In addition, upon characterizing these GEVNC CH containers, INL–CCP must provide EPA documentation on how CH container-specific AK information was handled, non destructive assay (NDA) data on the individual drums, and other supporting information, as appropriate.

TABLE 1—TIERING OF RH TRU WC PROCESSES IMPLEMENTED BY GEVNC–CCP, BASED ON DECEMBER 2–4, 2008 BASELINE INSPECTION

RH WC process elements	GEVNC–CCP RH WC—T1 changes	GEVNC–CCP RH WC—T2 changes *
Acceptable Knowledge (AK)	None **	Notification and submission of the following items: —Correlation and Surrogate Summary Form; (AK 2) —Revisions to the AK Summary CCP–AK–GEV–500, including changes to the associated Reference List; (AK 6) —Updates and revisions to CCP–AK–GEV–501; (AK 12) —Revision of reference M007; (AK 12) —Additional discrepancy resolutions; (AK 13) —Final Waste Stream Profile Form and related attachments, and subsequent change requests; (AK 14) —AK Accuracy reports for this waste stream; (AK 15).
Radiological Characterization, Dose-to-Curie (DTC), and the application of radionuclide-specific scaling factors.	None **	Notification and submission of the following items: —Revisions of CCP–AK–GEV–501 or CCP–TP–504 that require CBFO approval; (RC 3) —Generation of measurement data for any GEVNC RH TRU container(s) that subsequently qualifies as CH and is subject to NDA; (RC 8).
Visual Examination (VE)	None **	Notification and submission of the following items: —Any change to VE procedure(s) that requires CBFO approval; (VE 2); ***
WIPP Waste Information System (WWIS).	None at this time	Notification and submission of the following items: —Changes to WWIS procedure(s) that require CBFO approval; (WWIS 2); *** —Changes to the Excel spreadsheet titled WWIS Data Entry Summary Characterization and Certification; (WWIS 2).

* All applicable T2 changes must be provided to EPA within four (4) weeks of completion of the last shipment of GEVNC RH debris proposed for approval to WIPP for disposal.
** No additional RH waste from GEVNC will be characterized using the site processes evaluated during the inspection.
*** Excluding changes that are editorial in nature or are required to address administrative concerns.

IV. Availability of the Baseline Inspection Report for Public Comment

EPA has placed the report discussing the results of the Agency's inspection of GEVNC–CCP in the public docket as described in **ADDRESSES**. In accordance with 40 CFR 194.8, EPA is providing the public 45 days to comment on these documents. The Agency requests comments on the proposed approval decision, as described in the inspection report. EPA will accept public comment on this notice and supplemental information as described in Section 1.B. above. EPA will not make a determination of compliance before the 45-day comment period ends. At the end of the public comment period, EPA will evaluate all relevant public comments and revise the inspection report as necessary. If appropriate, the Agency will then issue a final approval letter and inspection report, both of which will be posted on the WIPP Web site.

Information on the certification decision is filed in the official EPA Air Docket, Docket No. A–93–02 and is available for review in Washington, DC, and at the three EPA WIPP informational docket locations in Albuquerque, Carlsbad, and Santa Fe, New Mexico. The dockets in New Mexico contain only major items from the official Air Docket in Washington, DC, plus those documents added to the official Air Docket since the October 1992 enactment of the WIPP LWA.

Dated: June 12, 2009.

Elizabeth Cotsworth,

Director, Office of Radiation and Indoor Air.

[FR Doc. E9–14706 Filed 6–22–09; 8:45 am]

BILLING CODE 6560–50–P

ENVIRONMENTAL PROTECTION AGENCY

[FRL–8921–3]

Public Water Supply Supervision Program; Program Revision for the State of Idaho

AGENCY: Environmental Protection Agency (EPA).

ACTION: Notice of Tentative Approval.

SUMMARY: Notice is hereby given that the State of Idaho has revised its approved State Public Water Supply Supervision Primacy Program. Idaho has adopted regulations analogous to EPA's Variance and Exemptions Rule, Stage 2 Disinfectants and Disinfection Byproducts Rule, Long Term 2 Enhanced Surface Water Treatment Rule, Ground Water Rule, and Lead and Copper Short-Term Regulatory Revisions and Clarifications Rule. EPA has determined that these revisions are no less stringent than the corresponding federal regulations. Therefore, EPA intends to approve these State program revisions. By approving these rules, EPA does not intend to affect the rights of Federally recognized Indian tribes within ''Indian country'' as defined by 18 U.S.C. 1151, nor does it intend to limit existing rights of the State of Idaho.

All interested parties may request a public hearing. A request for a public hearing must be submitted by July 23, 2009 to the Regional Administrator at the EPA address shown below. Frivolous or insubstantial requests for a hearing may be denied by the Regional Administrator.

However, if a substantial request for a public hearing is made by July 23, 2009, a public hearing will be held. If no timely and appropriate request for a hearing is received and the Regional Administrator does not elect to hold a hearing on her own motion, this determination shall become final and effective on July 23, 2009.

Any request for a public hearing shall include the following information: (1) The name, address, and telephone number of the individual, organization, or other entity requesting a hearing; (2) a brief statement of the requesting person's interest in the Regional Administrator's determination and a brief statement of the information that the requesting person intends to submit at such hearing; (3) the signature of the

individual making the request, or, if the request is made on behalf of an organization or other entity, the signature of a responsible official of the organization or other entity.

ADDRESSES: All documents relating to this determination are available for inspection between the hours of 9 a.m. and 4 p.m., Monday through Friday, at the Idaho Department of Environmental Quality, 1410 North Hilton, Boise, Idaho 83706 and between the hours of 9 a.m.–12 p.m. and 1–4 p.m. at the EPA Region 10 Library, 1200 Sixth Avenue, Seattle, Washington 98101.

FOR FURTHER INFORMATION CONTACT: Wendy Marshall, EPA Region 10, Drinking Water Unit, at the Seattle address given above; telephone (206) 553–1890.

Authority: Section 1420 of the Safe Drinking Water Act, as amended (1996), and 40 CFR Part 142 of the National Primary Drinking Water Regulations.

Dated: June 15, 2009.

Michelle L. Pirzadeh,

Acting Regional Administrator.

[FR Doc. E9–14746 Filed 6–22–09; 8:45 am]

BILLING CODE 6560–50–P

ENVIRONMENTAL PROTECTION AGENCY

[Docket# EPA–RO4–SFUND–2009–0375, FRL–8922–1]

W.R. Grace Superfund Site, Wilder, Campbell County, KY; Notice of Settlement

AGENCY: Environmental Protection Agency.

ACTION: Notice of settlement.

SUMMARY: Under Section 122(h)(1) of the Comprehensive Environmental Response, Compensation and Liability Act (CERCLA), the United States Environmental Protection Agency has entered into a settlement for reimbursement of past response costs concerning the W.R. Grace Superfund Site located in Wilder, Campbell County, Kentucky for publication.

DATES: The Agency will consider public comments on the settlement until July 23, 2009. The Agency will consider all comments received and may modify or withdraw its consent to the settlement if comments received disclose facts or considerations which indicate that the settlement is inappropriate, improper, or inadequate.

ADDRESSES: Copies of the settlement are available from Ms. Paula V. Painter. Submit your comments, identified by Docket ID No. EPA–RO4–SFUND–2009–0375 or Site name W.R. Grace Superfund Site by one of the following methods:

- *http://www.regulations.gov:* Follow the on-line instructions for submitting comments.
- *http://www.epa.gov/region4/waste/sf/enforce.htm.*
- *E-mail: Painter.Paula@epa.gov.*

FOR FURTHER INFORMATION CONTACT: Paula V. Painter at 404/562–8887.

Dated: June 5, 2009.

Anita L. Davis,

Chief, Superfund Enforcement & Information Management Branch, Superfund Division.

[FR Doc. E9–14711 Filed 6–22–09; 8:45 am]

BILLING CODE 6560–50–P

GENERAL SERVICES ADMINISTRATION

Privacy Act of 1974; Revised Privacy Act System of Records

AGENCY: General Services Administration.

ACTION: Notice of a revised Privacy Act system of records.

SUMMARY: The General Services Administration (GSA) is publishing a notice of revision to the system of records Emergency Management Records (GSA/HRO–9). The revision includes information on the new vendor that stores emergency management records. The purpose of the revised system is to ensure an up-to-date communication capability by GSA nationwide, and facilitate continuity of critical GSA missions and functions in emergency situations. The system covers all GSA employees and contractors, as well as key governmental and non-governmental persons essential to carrying out emergency functions.

DATES: Effective July 23, 2009.

FOR FURTHER INFORMATION CONTACT: Call or e-mail the GSA Privacy Act Officer: telephone 202–208–1317; e-mail *gsa.privacyact@gsa.gov.*

ADDRESSES: GSA Privacy Act Officer (CIB), General Services Administration, 1800 F Street, NW., Washington, DC 20405.

SUPPLEMENTARY INFORMATION: GSA reviewed this Privacy Act system of records to ensure that it is relevant, necessary, accurate, up-to-date, and covered by the appropriate legal or regulatory authority. Nothing in the revised system notice indicates a change in authorities or practices regarding the collection and maintenance of information, nor do the changes impact individuals' rights to access or amend their records in the systems of records.

Dated: June 17, 2009.

James L. Atwater,

Director, Information Resources and Privacy Management Division (CIB).

GSA/HRO–9

SYSTEM NAME:

Emergency Management Records (GSA/HRO–9).

SYSTEM LOCATION:

The system is located at the vendor location in the Quest Hosting primary data center located in Glendale, CA. Everbridge Notification Alert & Accountability System (NAAS) is the responsibility of the GSA Office of Emergency Response and Recovery, located at 1800 F Street, NW., Washington, DC 20405. System records are located in the GSA Central Office and regional offices with assigned emergency management responsibilities.

CATEGORIES OF INDIVIDUALS COVERED BY THE SYSTEM:

All GSA employees, contractors, and other key governmental and non-governmental persons essential to carrying out emergency activities or with a need to know of actions taken by GSA in an emergency.

CATEGORIES OF RECORDS IN THE SYSTEM:

The records, composed of emergency notification rosters and files, may consist of paper records and/or electronic databases, including the Emergency Management Information Database (EMID), the Quick Notify database, and continuity of operations (COOP) files. The data is consolidated into a centralized emergency contact database to expedite communication. Personal information in the system records includes name; office, cell, and home telephone numbers; out-of-area contact telephone numbers; home e-mail address; and home fax number. System records also may include special needs information such as medical, mobility, and transportation requirements by individuals. Additional information may include official titles and emergency assignments for individuals in the system.

AUTHORITIES FOR MAINTENANCE:

40 U.S.C. Chapters 1 & 3: Executive Order No. 12656, as amended, Assignment of Emergency Preparedness Responsibilities (Nov. 18, 1988); Directive on National Continuity Policy, 43 Weekly Compilation of Presidential Documents 593 (May 14, 2007).

PURPOSE:

To maintain current information on GSA employees and other persons

covered by this system for use by persons with emergency management responsibilities to notify officials, employees, and other affected individuals of conditions that require their urgent attention during a public or personal emergency.

ROUTINE USES OF THE SYSTEM RECORDS, INCLUDING CATEGORIES OF USERS AND THEIR PURPOSES FOR USING THE SYSTEM:

a. In any legal proceeding, where pertinent, to which GSA is a party before a court or administrative body.

b. To a Federal agency in connection with the hiring or retention of an employee; the issuance of a security clearance; the reporting of an investigation; the letting of a contract; or the issuance of a grant, license, or other benefit to the extent that the information is relevant and necessary to a decision.

c. To the Office of Personnel Management (OPM), the Office of Management and Budget (OMB), or the Government Accountability Office (GAO) when the information is required for program evaluation purposes.

d. To a Member of Congress or staff on behalf of and at the request of the individual who is the subject of the record.

e. To an expert, consultant, or contractor of GSA in the performance of a Federal duty to which the information is relevant.

f. To the National Archives and Records Administration (NARA) for records management purposes.

g. To appropriate agencies, entities, and persons when (1) the Agency suspects or has confirmed that the security or confidentiality of information in the system of records has been compromised; (2) the Agency has determined that as a result of the suspected or confirmed compromise there is a risk of harm to economic or property interests, identity theft or fraud, or harm to the security or integrity of this system or other systems or programs (whether maintained by GSA or another agency or entity) that rely upon the compromised information; and (3) the disclosure made to such agencies, entities, and persons is reasonably necessary to assist in connection with GSA's efforts to respond to the suspected or confirmed compromise and prevent, minimize, or remedy such harm.

h. To disclose information to a Federal, State, local, or foreign agency responsible for investigating, prosecuting, enforcing, or carrying out a statute, rule, regulation, or order, where the agency becomes aware of a violation or potential violation of civil or criminal law or regulation.

i. To disclose information to an appeal, grievance, or formal complaints examiner; equal employment opportunity investigator; arbitrator; union official or other official engaged in investigating or settling a grievance, complaint, or appeal filed by an employee.

POLICIES AND PRACTICES FOR STORING, RETRIEVING, ACCESSING, RETAINING, AND DISPOSING OF SYSTEM RECORDS:

STORAGE:

System records are located in the GSA Central Office and regional offices with assigned emergency management responsibilities.

RETRIEVABILITY:

Records may be retrieved by name, organization, location, teleworking capability, or special medical or other health or safety need of an individual.

SAFEGUARDS:

When not in use by an authorized person, the records are secured from unauthorized access. Paper records are placed in lockable file cabinets or in secured areas. Electronic records are protected by passwords, access codes, and other appropriate technical security measures.

RETENTION AND DISPOSAL:

Disposal of system records is according to the Handbook, GSA Records Maintenance and Disposition System (CIO P 1820.1), and the requirements of the National Archives and Records Administration.

SYSTEM MANAGER AND ADDRESS:

The Director, Office of Emergency Response and Recovery, Disaster Support Division, 1800 F Street, NW., Washington, DC 20405. GSA services, staff offices and regions are responsible for the integrity of data within their jurisdictions.

NOTIFICATION PROCEDURE:

Individuals may determine whether the system contains their records by submitting a request to the System Manager or the appropriate Service, Staff Office, or regional official.

RECORDS ACCESS PROCEDURES:

An individual may obtain information on the procedures for gaining access to their records from the System Manager or the appropriate Service, Staff Office, or regional official.

CONTESTING RECORD PROCEDURES:

Individuals wishing to request amendment of their records should contact the System Manager or the appropriate Service, Staff Office, or regional official. GSA rules for contesting the content of a record and appealing an initial decision are in 41 CFR 105–60.

RECORD SOURCES CATEGORIES:

The records contain information provided by the individuals themselves, and it is all voluntary information.

[FR Doc. E9–14639 Filed 6–22–09; 8:45 am]

BILLING CODE 6820–34–P

DEPARTMENT OF HEALTH AND HUMAN SERVICES

Public Meeting of the President's Council on Bioethics; Cancellation

AGENCY: Department of Health and Human Services, Office of the Secretary, Office of Public Health and Science, The President's Council on Bioethics.

ACTION: Notice.

SUMMARY: A notice was published in the **Federal Register** on Friday, May 29, 2009, Vol. 74, No. 102, to announce that a meeting of the President's Council on Bioethics was scheduled to be held on Thursday, June 25, 2009, and Friday, June 26, 2009. This meeting has been cancelled in its entirety. Currently, there are no plans to reschedule this meeting.

FOR FURTHER INFORMATION CONTACT: Ms. Diane M. Gianelli, Director of Communications, The President's Council on Bioethics, 1425 New York Avenue, NW., Suite C100, Washington, DC 20005; *telephone:* (202) 296–4669; *e-mail: info@bioethics.gov.; Web site: http://www.bioethics.gov.*

Dated: June 18, 2009.

F. Daniel Davis,

Executive Director, The President's Council on Bioethics.

[FR Doc. E9–14775 Filed 6–22–09; 8:45 am]

BILLING CODE 4154–06–P

DEPARTMENT OF HEALTH AND HUMAN SERVICES

Administration for Children and Families

Submission for OMB Review; Comment Request

Title: Temporary Assistance for Needy Families/National Directory of New Hires Match Results Report.

OMB No.: 0970–0311.

Description: Section 453(j)(3) of the Social Security Act (the Act) allows for matching between the National Directory of New Hires (maintained by the Federal Office of Child Support Enforcement (OCSE) and State TANF

Agencies for purposes of carrying out responsibilities under programs funded under part A of Title IV of the Act. To assist OCSE and the Office of Family Assistance (OFA) in measuring savings to the TANF program attributable to the use of NDNH data matches, the State TANF Agencies have agreed to provide OCSE with a written description of the performance outputs and outcomes attributable to the State TANF Agency's use of NDNH match results. This information will help OCSE demonstrate how the NDNH supports the OCSE's mission and strategic goals.

Respondents: State TANF Agencies.

ANNUAL BURDEN ESTIMATES

Instrument	Number of respondents	Number of responses per respondent	Average burden hours per response	Total burden hours
TANF/NDNH Match Results Report	40	4	0.17	27.20

Estimated Total Annual Burden Hours: 27.20.

Additional Information: Copies of the proposed collection may be obtained by writing to the Administration for Children and Families, Office of Administration, Office of Information Services, 370 L'Enfant Promenade, SW., Washington, DC 20447, *Attn:* ACF Reports Clearance Officer. All requests should be identified by the title of the information collection. *E-mail address: infocollection@acf.hhs.gov.*

OMB Comment: OMB is required to make a decision concerning the collection of information between 30 and 60 days after publication of this document in the **Federal Register**. Therefore, a comment is best assured of having its full effect if OMB receives it within 30 days of publication. Written comments and recommendations for the proposed information collection should be sent directly to the following: Office of Management and Budget, Paperwork Reduction Project, *Fax:* 202–395–7245, *Attn:* Desk Officer for the Administration for Children and Families.

Dated: June 17, 2009.

Janean Chambers,

Reports Clearance Officer.

[FR Doc. E9–14637 Filed 6–22–09; 8:45 am]

BILLING CODE 4184–01–P

DEPARTMENT OF HEALTH AND HUMAN SERVICES

Centers for Medicare and Medicaid Services

[Document Identifier CMS–10291]

Emergency Clearance: Public Information Collection Requirements Submitted to the Office of Management and Budget (OMB)

AGENCY: Center for Medicare and Medicaid Services, HHS.

In compliance with the requirement of section 3506(c)(2)(A) of the Paperwork Reduction Act of 1995, the Centers for Medicare and Medicaid Services (CMS), Department of Health and Human Services, is publishing the following summary of proposed collections for public comment. Interested persons are invited to send comments regarding this burden estimate or any other aspect of this collection of information, including any of the following subjects: (1) The necessity and utility of the proposed information collection for the proper performance of the agency's functions; (2) the accuracy of the estimated burden; (3) ways to enhance the quality, utility, and clarity of the information to be collected; and (4) the use of automated collection techniques or other forms of information technology to minimize the information collection burden.

1. *Type of Information Collection Request:* New collection; *Title of Information Collection:* State Collection and Reporting of Dental Provider and Benefit Package Information; *Form Number:* CMS–10291 (OMB#: 0938—New); *Use:* Section 501 of the Children's Health Insurance Program Reauthorization Act (CHIPRA) requires the Secretary to work with States, pediatric dentists, and other dental providers to include, no later than August 4, 2009, on the Insure Kids Now (IKN) Web site, a ''current and accurate list of all dentists and providers within each State that provide dental services to children enrolled in the State plan (or waiver) under Medicaid or the State child health plan (or waiver) under CHIP. Section 501 of CHIPRA also requires the Secretary to ensure the list is updated at least quarterly and includes the description of the dental services provided under Medicaid or CHIP and whether the services are provided through a State plan or waiver. The Secretary shall also post on the IKN Web site State specific information on available dental benefits. This information collection requirement will allow States to begin collecting the information on the dental providers and dental benefits in accordance with CHIPRA. *Frequency:* Yearly and Quarterly; *Affected Public:* State, Tribal and Local governments; *Number of Respondents:* 51; *Total Annual Responses:* 255; *Total Annual Hours:* 9,180. (For policy questions regarding this collection contact Nancy Goetschius at 410–786–0707. For all other issues call 410–786–1326.)

CMS is requesting OMB review and approval of this collection by *June 26, 2009,* with a 180-day approval period. Written comments and recommendations will be considered from the public if received by the individuals designated below by the noted deadline below.

To obtain copies of the supporting statement and any related forms for the proposed paperwork collections referenced above, access CMS's Web site address at *http://www.cms.hhs.gov/PaperworkReductionActof1995* or E-mail your request, including your address, phone number, OMB number, and CMS document identifier, to *Paperwork@cms.hhs.gov*, or call the Reports Clearance Office on (410) 786–1326.

In commenting on the proposed information collections please reference the document identifier or OMB control number. To be assured consideration, comments and recommendations must be submitted in one of the following ways by *July 6, 2009:*

1. *Electronically.* You may submit your comments electronically to *http://www.regulations.gov.* Follow the instructions for ''Comment or Submission'' or ''More Search Options'' to find the information collection document(s) accepting comments.

2. *By regular mail.* You may mail written comments to the following address:

CMS, Office of Strategic Operations and Regulatory Affairs, Division of Regulations Development, *Attention:* Document Identifier/OMB Control Number (CMS–10285), Room C4–26–05, 7500 Security Boulevard,

Baltimore, Maryland 21244–1850. and,

OMB Office of Information and Regulatory Affairs, *Attention:* CMS Desk Officer, New Executive Office Building, Room 10235, Washington, DC 20503. *Fax Number:* (202) 395–6974.

Dated: June 16, 2009.

Michelle Shortt,

Director, Regulations Development Group, Office of Strategic Operations and Regulatory Affairs.

[FR Doc. E9–14736 Filed 6–22–09; 8:45 am]

BILLING CODE 4120–01–P

DEPARTMENT OF HEALTH AND HUMAN SERVICES

Administration for Children and Families

Submission for OMB Review; Comment Request

Title: National Survey of Child and Adolescent Well-Being Second Cohort (NSCAW II).

OMB No.: 0970–0202.

Description: The Department of Health and Human Services (HHS) intends to collect follow-up data on a sample of children and families for the National Survey of Child and Adolescent Well-Being (NSCAW). The NSCAW was authorized under Section 427 of the Personal Responsibility and Work Opportunities Reconciliation Act of 1996. The NSCAW is the only source of nationally representative, firsthand information about the functioning and well-being, service needs, and service utilization of children and families who come to the attention of the child welfare system. Information is collected about children's cognitive, social, emotional, behavioral, and adaptive functioning, as well as family and community factors that are likely to influence their functioning. Family service needs and service utilization also are addressed in the data collection.

Selection of the current NSCAW sample and baseline data collection began in 2007 with a final anticipated sample size of 5,700 children. The proposed data collection will allow for follow-up of this sample 18 months post-baseline, and will follow the same format as that used in the baseline round and will employ, with only modest revisions, the same instruments that were used in the previous round. Data from NSCAW are made available to the research community through licensing arrangements from the National Data Archive on Child Abuse and Neglect at Cornell University.

Respondents: Children and their associated permanent or foster caregivers, caseworkers, and teachers.

ANNUAL BURDEN ESTIMATES

Instrument	Number of respondents	Number of responses per respondent	Average burden hours per response	Total burden hours
Child Interview	1,424	1	1.33	1,894
Caregiver Interview	1,424	1	1.9	2,706
Caseworker Interview	285	3	1	855
Teacher Questionnaire	855	1	.50	428

Estimated Total Annual Burden Hours: 5,882.

Additional Information: Copies of the proposed collection may be obtained by writing to the Administration for Children and Families, Office of Planning, Research and Evaluation, 370 L'Enfant Promenade, SW., Washington, DC 20447, Attn: OPRE Reports Clearance Officer. All requests should be identified by the title of the information collection. E-mail address: *OPREinfocollectiori@acf.hhs.gov.*

OMB Comment: OMB is required to make a decision concerning the collection of information between 30 and 60 days after publication of this document in the **Federal Register**. Therefore, a comment is best assured of having its full effect if OMB receives it within 30 days of publication. Written comments and recommendations for the proposed information collection should be sent directly to the following:

Office of Management and Budget Paperwork Reduction Project, Fax: 202–395–6974, Attn: Desk Officer for the Administration for Children and Families.

Dated: June 17, 2009.

Seth F. Chamberlain,

OPRE Reports Clearance Officer.

[FR Doc. E9–14625 Filed 6–22–09; 8:45 am]

BILLING CODE 4184–01–M

DEPARTMENT OF HEALTH AND HUMAN SERVICES

Administration for Children and Families

Proposed Information Collection Activity; Comment Request

Title: Cross-Site Evaluation of the Children's Bureau Grantee.

Cluster: Supporting Evidence-Based Home Visiting Programs to Prevent Child Maltreatment (EBHV).

OMB No.: New Collection.

Description: The Administration for Children and Families (ACF), U.S. Department of Health and Human Services (HHS), is proposing this cross-site evaluation data collection activity to identify successful strategies for adopting, implementing, and sustaining high-quality home visitation programs to prevent child maltreatment. An evaluation study will address four domains: (1) Systems change to develop infrastructure, (2) fidelity to home visiting models, (3) costs, and (4) family and child outcomes (via a review of grantee analysis reports). A process study will focus on the broader grant initiative to understand how programs plan and develop the infrastructure needed to support home visitation services and how programs ensure service quality.

Information will be collected through biennial site visits, semi-annual progress reports, and monthly entries into a web-based data system. Site visits will include interviews with key grantee staff and stakeholders involved in the execution of the grant and in the efforts to make system changes. Progress report cross-site evaluation data will capture the costs of home visiting and provide additional information on systems change. Web-based data entry will include EBHV program and participant characteristics along with systems change updates on goals and operations every six months. Additionally, cross-

site data will be collected via questionnaires on the home visit relationship and a systems partnership survey.

Respondents: EBHV grantee and key staff (*i.e.,* evaluators, home visitors and supervisors), partners, and home visiting participants.

ANNUAL BURDEN ESTIMATES

Instrument	Annual number of respondents	Number of responses per respondents	Average burden hour per response	Estimated annual burden hours
EBHV grantee and key staff-partner interview guide	249	2	1.6	797
EBHV grantee progress report evaluation data	17	2	8.00	272
EBHV grantee web-based data entry system	17	12	9.50	1,938
Participant home visiting relationship questionnaire	2,000	2	0.25	1,000
Home Visitor home visiting relationship questionnaire	2,000	2	0.25	1,000
EBHV grantee-partner systems partnership survey	142	2	0.33	94

Estimated Total Burden Hours: 5,101.

In compliance with the requirements of Section 3506(c)(2)(A) of the Paperwork Reduction Act of 1995, the Administration for Children and Families is soliciting public comment on the specific aspects of the information collection described above. Copies of the proposed collection of information can be obtained and comments may be forwarded by writing to the Administration for Children and Families, Office of Planning, Research and Evaluation, 370 L'Enfant Promenade, SW., Washington, DC 20447, Attn: OPRE Reports Clearance Officer. E-mail address: *OPREinfocollection@acf.hhs.gov.* All requests should be identified by the title of the information collection.

The Department specifically requests comments on (a) Whether the proposed collection of information is necessary for the proper performance of the functions of the agency, including whether the information shall have practical utility; (b) the accuracy of the agency's estimate of the burden of the proposed collection of information; (c) the quality, utility, and clarity of the information to be collected; and (d) ways to minimize the burden of the collection of information on respondents, including through the use of automated collection techniques or other forms of information technology. Consideration will be given to comments and suggestions submitted within 60 days of this publication.

Dated: June 17, 2009.

Seth F. Chamberlain,

OPRE Reports Clearance Officer.

[FR Doc. E9–14624 Filed 6–22–09; 8:45 am]

BILLING CODE 4184–01–M

DEPARTMENT OF HEALTH AND HUMAN SERVICES

National Institutes of Health

Center for Scientific Review; Amended Notice of Meeting

Notice is hereby given of a change in the meeting of the Center for Scientific Review Special Emphasis Panel, June 29, 2009, 2 p.m. to June 29, 2009, 5 p.m., National Institutes of Health, 6701 Rockledge Drive, Bethesda, MD, 20892 which was published in the **Federal Register** on June 11, 2009, 74 FR 27806–27808.

The meeting time on June 29, 2009 has been changed to 11 a.m. to 12:30 p.m. The meeting date and location remain the same. The meeting is closed to the public.

Jennifer Spaeth,

Director, Office of Federal Advisory Committee Policy.

[FR Doc. E9–14694 Filed 6–22–09; 8:45 am]

BILLING CODE 4140–01–P

DEPARTMENT OF HEALTH AND HUMAN SERVICES

National Institutes of Health

National Institute of Neurological Disorders and Stroke; Notice of Closed Meeting

Pursuant to section 10(d) of the Federal Advisory Committee Act, as amended (5 U.S.C. App.), notice is hereby given of the following meeting.

The meeting will be closed to the public in accordance with the provisions set forth in sections 552b(c)(4) and 552b(c)(6), Title 5 U.S.C., as amended. The grant applications and the discussions could disclose confidential trade secrets or commercial property such as patentable material, and personal information concerning individuals associated with the grant applications, the disclosure of which would constitute a clearly unwarranted invasion of personal privacy.

Name of Committee: National Institute of Neurological Disorders and Stroke Special Emphasis Panel. ARRA Supplement Review Panel.

Date: June 26, 2009.

Time: 3 p.m. to 5 p.m.

Agenda: To review and evaluate grant applications.

Place: State Plaza Hotel, 2117 E Street, NW., Washington, DC 20037.

Contact Person: Ernest W Lyons, PhD, Scientific Review Administrator, Scientific Review Branch, NINDS/NIH/DHHS, Neuroscience Center, 6001 Executive Blvd., Suite 3208, MSC 9529, Bethesda, MD 20892–9529. 301–496–4056. *lyonse@ninds.nih.gov.*

This notice is being published less than 15 days prior to the meeting due to the timing limitations imposed by the review and funding cycle.

(Catalogue of Federal Domestic Assistance Program Nos. 93.853, Clinical Research Related to Neurological Disorders; 93.854, Biological Basis Research in the Neurosciences; 93.701, ARRA Related Biomedical Research and Research Support Awards., National Institutes of Health, HHS)

Dated: June 17, 2009.

Jennifer Spaeth,

Director, Office of Federal Advisory Committee Policy.

[FR Doc. E9–14696 Filed 6–22–09; 8:45 am]

BILLING CODE 4140–01–P

DEPARTMENT OF HEALTH AND HUMAN SERVICES

National Institutes of Health

National Center for Complementary & Alternative Medicine; Notice of Closed Meetings

Pursuant to section 10(d) of the Federal Advisory Committee Act, as amended (5 U.S.C. App.), notice is hereby given of the following meetings.

The meetings will be closed to the public in accordance with the

provisions set forth in sections 552b(c)(4) and 552b(c)(6), Title 5 U.S.C., as amended. The grant applications and the discussions could disclose confidential trade secrets or commercial property such as patentable material, and personal information concerning individuals associated with the grant applications, the disclosure of which would constitute a clearly unwarranted invasion of personal privacy.

Name of Committee: National Center for Complementary and Alternative Medicine Special Emphasis Panel; RFA AT09–002 Translational Tools for Clinical Studies of CAM Interventions.

Date: July 15, 2009.

Time: 12 p.m. to 5 p.m.

Agenda: To review and evaluate grant applications.

Place: National Institutes of Health, Two Democracy Plaza, 6707 Democracy Boulevard, Bethesda, MD 20892, (Telephone Conference Call).

Contact Person: Ray Bramhall, PhD, Scientific Review Officer, National Center for Complementary and Alternative Medicine, 6707 Democracy Blvd., Suite 401, Bethesda, MD 20892, *bramhallr@mail.nih.gov.*

Name of Committee: National Center for Complementary and Alternative Medicine Special Emphasis Panel; Botanical Centers.

Date: August 2–3, 2009.

Time: 5 p.m. to 5 p.m.

Agenda: To review and evaluate grant applications.

Place: Courtyard Marriott Washingtonian Center, 204 Boardwalk Place, Gaithersburg, MD 20814.

Contact Person: Martina Schmidt, PhD, Scientific Review Officer, Office of Scientific Review, National Center for Complementary & Alternative Medicine, NIH, 6707 Democracy Blvd., Suite 401, Bethesda, MD 20892, 301–594–3456, *schmidma@mail.nih.gov.*

(Catalogue of Federal Domestic Assistance Program Nos. 93.213, Research and Training in Complementary and Alternative Medicine, National Institutes of Health, HHS)

Dated: June 17, 2009.

Jennifer Spaeth,

Director, Office of Federal Advisory Committee Policy.

[FR Doc. E9–14701 Filed 6–22–09; 8:45 am]

BILLING CODE 4140–01–P

DEPARTMENT OF HEALTH AND HUMAN SERVICES

Centers for Disease Control and Prevention

Disease, Disability, and Injury Prevention and Control Special Emphasis Panel (SEP): American Recovery and Reinvestment Act (ARRA)-Section 317 Immunization Program: Strengthening the Evidence Base Measuring Effectiveness of Two Dose of Varicella Vaccine, Funding Opportunity Announcement (FOA) IP04–11601ARRA09, Initial Review

In accordance with Section 10(a)(2) of the Federal Advisory Committee Act (Pub. L. 92–463), the Centers for Disease Control and Prevention (CDC) announces the aforementioned meeting.

Time and Date: 12 p.m.–2 p.m., July 28, 2009 (Closed).

Place: Teleconference.

Status: The meeting will be closed to the public in accordance with provisions set forth in Section 552b(c) (4) and (6), Title 5 U.S.C., and the Determination of the Director, Management Analysis and Services Office, CDC, pursuant to Public Law 92–463.

Matters to be Discussed: The meeting will include the initial review, discussion, and evaluation of ''ARRA-Section 317 Immunization Program: Strengthening the Evidence Base Measuring Effectiveness of Two Dose of Varicella Vaccine, FOA IP04–11601ARRA09.''

For More Information Contact: Wendy Carr, PhD, CDC, 1600 Clifton Road, NE., Mailstop E60, Atlanta, GA 30333, Telephone: (404) 498–2276.

The Director, Management Analysis and Services Office, has been delegated the authority to sign **Federal Register** notices pertaining to announcements of meetings and other committee management activities, for both CDC and the Agency for Toxic Substances and Disease Registry.

Dated: June 12, 2009.

Elaine L. Baker,

Director, Management Analysis and Services Office Centers for Disease Control and Prevention.

[FR Doc. E9–14664 Filed 6–22–09; 8:45 am]

BILLING CODE 4163–18–P

DEPARTMENT OF HEALTH AND HUMAN SERVICES

Centers for Disease Control and Prevention

Disease, Disability, and Injury Prevention and Control Special Emphasis Panel (SEP): Translating Research To Protect Health Through Health Promotion, Prevention, and Preparedness, Panel D, Funding Opportunity Announcement (FOA) CD09–001, Initial Review

In accordance with section 10(a)(2) of the Federal Advisory Committee Act (Pub. L. 92–463), the Centers for Disease Control and Prevention (CDC) announces the aforementioned meeting:

Time and Date: 9 a.m.–5 p.m., July 21, 2009 (Closed). 9 a.m.–1 p.m., July 22, 2009 (Closed).

Place: W Hotel, Midtown, 188 14th Street, NE., Atlanta, Georgia 30361, Telephone: (404) 892–6000.

Status: The meeting will be closed to the public in accordance with provisions set forth in section 552b(c)(4) and (6), Title 5 U.S.C., and the Determination of the Director, Management Analysis and Services Office, CDC, pursuant to Public Law 92–463.

Matters To Be Discussed: The meeting will include the initial review, discussion, and evaluation of ''Translating Research to Protect Health through Health Promotion, Prevention, and Preparedness, Panel D, FOA CD09–001, initial review.''

For More Information Contact: Christine J. Morrison, PhD, Scientific Review Administrator, CDC, 1600 Clifton Road, NE., Mailstop D72, Atlanta, GA 30333, Telephone (404) 639–3098.

The Director, Management Analysis and Services Office, has been delegated the authority to sign **Federal Register** notices pertaining to announcements of meetings and other committee management activities, for both CDC and the Agency for Toxic Substances and Disease Registry.

Dated: June 15, 2009.

Elaine L. Baker,

Director, Management Analysis and Services Office, Centers for Disease Control and Prevention.

[FR Doc. E9–14659 Filed 6–22–09; 8:45 am]

BILLING CODE 4163–18–P

DEPARTMENT OF HEALTH AND HUMAN SERVICES

Centers for Medicare & Medicaid Services

Notice of Hearing: Reconsideration of Disapproval of Washington State Plan Amendment (SPA) 08–019

AGENCY: Centers for Medicare & Medicaid Services (CMS), HHS.

ACTION: Notice of Hearing.

SUMMARY: This notice announces an administrative hearing to be held on August 4, 2009, at the CMS Seattle Regional Office, 2201 Sixth Avenue, MS/RX–43, Seattle, Washington 98121, to reconsider CMS' decision to disapprove Washington SPA 08–019.

CLOSING DATE: Requests to participate in the hearing as a party must be received by the presiding officer by 15 days after publication.

FOR FURTHER INFORMATION CONTACT: Benjamin Cohen, Presiding Officer, CMS, 2520 Lord Baltimore Drive, Suite L, Baltimore, Maryland 21244, *Telephone:* (410) 786–3169.

SUPPLEMENTARY INFORMATION: This notice announces an administrative hearing to reconsider CMS' decision to disapprove Washington SPA 08–019 which was received by CMS on September 23, 2008, and disapproved on March 6, 2009. The SPA proposed to increase dispensing fees for pharmacies from $4.20 to $4.24 for high-volume pharmacies, $4.51 to $4.56 for mid-volume pharmacies, $5.20 to $5.25 for low-volume pharmacies, and $5.20 to $5.25 for unit dose systems.

As submitted, SPA 08–019 has raised concerns regarding compliance with section 1902(a)(30) of the Social Security Act (the Act) and implementing regulatory requirements. Section 1902(a)(30)(A) of the Act requires that States have methods and procedures in place to assure that payments are consistent with efficiency, economy, and quality of care.

Under that authority, the Secretary has issued regulations prescribing State rate-setting procedures and requirements. Longstanding requirements (presently codified at 42 CFR 447.512 and 447.514, and previously codified at 42 CFR 447.331 and 447.332) provide that the State is responsible for demonstrating that the dispensing fees are reasonable. The State has not provided that demonstration. In addition, Federal regulations at 42 CFR 447.205 require that a State provide public notice of any significant proposed change in its methods and standards for setting payment rates for services. In support of this amendment, the State believes that issuing a memorandum to providers online meets the public requirements. We believe that this does not meet the Federal standard. We believe public notice promotes transparency and openness in this process and allows the public to be fully aware of the State's actions.

Based on the above, and after consultation with the Secretary of the Department of Health and Human Services as required under Federal regulations at 42 CFR 430.15(c)(2), Washington SPA 08–019 was disapproved.

The following issues will be considered at the hearing:

- Whether Washington provided adequate public notice for setting payment rates for services as required at 42 CFR 447.205.
- Whether Washington met the longstanding requirement (presently codified at 42 CFR 447.512 and 447.514, and previously codified in 42 CFR 447.331 and 447.332) that the State is responsible for demonstrating that the proposed increased dispensing fees are reasonable.

Section 1116 of the Act and Federal regulations at 42 CFR Part 430, establish Department procedures that provide an administrative hearing for reconsideration of a disapproval of a State plan or plan amendment. CMS is required to publish a copy of the notice to a State Medicaid agency that informs the agency of the time and place of the hearing, and the issues to be considered. If CMS subsequently notifies the agency of additional issues that will be considered at the hearing, we will also publish that notice.

Any individual or group that wants to participate in the hearing as a party must petition the presiding officer within 15 days after publication of this notice, in accordance with the requirements contained at 42 CFR 430.76(b)(2). Any interested person or organization that wants to participate as amicus curiae must petition the presiding officer before the hearing begins in accordance with the requirements contained at 42 CFR 430.76(c). If the hearing is later rescheduled, the presiding officer will notify all participants.

The notice to the State of Washington announcing an administrative hearing to reconsider the disapproval of its SPA reads as follows:

Ms. Susan Dreyfus
Secretary
Department of Social and Health Services
P.O. Box 45010
Olympia, WA 98504–5010

Dear Ms. Dreyfus:

I am responding to your request for reconsideration of the decision to disapprove the Washington State plan amendment (SPA) 08–019, which was received by the Centers for Medicare & Medicaid Services on September 23, 2008, and disapproved on March 6, 2009. The SPA proposed to increase dispensing fees for pharmacies from $4.20 to $4.24 for high-volume pharmacies, $4.51 to $4.56 for mid-volume pharmacies, $5.20 to $5.25 for low-volume pharmacies, and $5.20 to $5.25 for unit dose systems.

The following issues will be considered at the hearing:

- Whether Washington provided adequate public notice for setting payment rates for services as required at 42 CFR 447.205.
- Whether Washington met the longstanding requirement (presently codified at 42 CFR 447.512 and 447.514, and previously codified in 42 CFR 447.331 and 447.332) that the State is responsible for demonstrating that the proposed increased dispensing fees are reasonable.

I am scheduling a hearing on your request for reconsideration to be held on August 4, 2009, at the Centers for Medicare & Medicaid Services' Seattle Regional Office, 2201 Sixth Avenue, MS/RX–43, Seattle, Washington 98121, in order to reconsider the decision to disapprove SPA 08–019. If this date is not acceptable, we would be glad to set another date that is mutually agreeable to the parties. The hearing will be governed by the procedures prescribed by Federal regulations at 42 CFR Part 430.

I am designating Mr. Benjamin Cohen as the presiding officer. If these arrangements present any problems, please contact the presiding officer at (410) 786–3169. In order to facilitate any communication which may be necessary among the parties to the hearing, please notify the presiding officer to indicate acceptability of the hearing date that has been scheduled and provide names of the individuals who will represent the State at the hearing.

Sincerely,

Charlene Frizzera

Acting Administrator

Section 1116 of the Social Security Act (42 U.S.C. section 1316; 42 CFR section 430.18)

(Catalog of Federal Domestic Assistance program No. 13.714, Medicaid Assistance Program.)

Dated: June 16, 2009.

Charlene Frizzera,

Acting Administrator, Centers for Medicare & Medicaid Services.

[FR Doc. E9–14776 Filed 6–22–09; 8:45 am]

BILLING CODE P

DEPARTMENT OF HEALTH AND HUMAN SERVICES

Food and Drug Administration

[Docket No. FDA–2009–N–0664]

Advisory Committee for Reproductive Health Drugs; Notice of Meeting

AGENCY: Food and Drug Administration, HHS.

ACTION: Notice.

This notice announces a forthcoming meeting of a public advisory committee of the Food and Drug Administration (FDA). The meeting will be open to the public.

Name of Committee: Advisory Committee for Reproductive Health Drugs.

General Function of the Committee: To provide advice and recommendations to the agency on FDA's regulatory issues.

Date and Time: The meeting will be held on August 13, 2009, from 8 a.m. to 4:30 p.m.

Location: Hilton Washington DC North/Gaithersburg, The Ballrooms, 620 Perry Pkwy, Gaithersburg, MD. The hotel phone number is 301–977–8900.

Contact: Kalyani Bhatt, Center for Drug Evaluation and Research (HFD–21), Food and Drug Administration, 5600 Fishers Lane, (for express delivery, 5630 Fishers Lane, rm. 1093) Rockville, MD 20857, 301–827–7001, fax: 301–827–6776, e-mail: *Kalyani.Bhatt@fda.hhs.gov*, or FDA Advisory Committee Information Line, 1–800–741–8138 (301–443–0572) in Washington, DC area), code 3014512537. Please call the Information Line for up-to-date information on this meeting. A notice in the **Federal Register** about last minute modifications that impact a previously announced advisory committee meeting cannot always be published quickly enough to provide timely notice. Therefore, you should always check the agency's Web site and call the appropriate advisory committee hot line/phone line to learn about possible modifications before coming to the meeting.

Agenda: The committee will discuss new biologics license applications (BLAs) 125–320, 125–331, 125–332, and 125–333, proposed trade name PROLIA (denosumab) subcutaneous injection, 60 milligrams (mg), Amgen Inc., for the proposed indications of the treatment and prevention of osteoporosis in postmenopausal women, and the treatment and prevention of bone loss in patients undergoing hormone ablation for prostate or breast cancer. Hormone ablation is a term used to encompass therapies for hormone sensitive breast or prostate cancer administered to decrease sex hormone (estrogen or testosterone) levels. These therapies can result in increased bone loss.

FDA intends to make background material available to the public no later than 2 business days before the meeting. If FDA is unable to post the background material on its Web site prior to the meeting, the background material will be made publicly available at the location of the advisory committee meeting, and the background material will be posted on FDA's Web site after the meeting. Background material is available at *http://www.fda.gov/AdvisoryCommittees/Calendar/default.htm*, click on the year 2009 and scroll down to the appropriate advisory committee link.

Procedure: Interested persons may present data, information, or views, orally or in writing, on issues pending before the committee. Written submissions may be made to the contact person on or before July 30, 2009. Oral presentations from the public will be scheduled between approximately 1 p.m. and 2 p.m. Those desiring to make formal oral presentations should notify the contact person and submit a brief statement of the general nature of the evidence or arguments they wish to present, the names and addresses of proposed participants, and an indication of the approximate time requested to make their presentation on or before July 22, 2009. Time allotted for each presentation may be limited. If the number of registrants requesting to speak is greater than can be reasonably accommodated during the scheduled open public hearing session, FDA may conduct a lottery to determine the speakers for the scheduled open public hearing session. The contact person will notify interested persons regarding their request to speak by July 23, 2009.

Persons attending FDA's advisory committee meetings are advised that the agency is not responsible for providing access to electrical outlets.

FDA welcomes the attendance of the public at its advisory committee meetings and will make every effort to accommodate persons with physical disabilities or special needs. If you require special accommodations due to a disability, please contact Kalyani Bhatt at least 7 days in advance of the meeting.

FDA is committed to the orderly conduct of its advisory committee meetings. Please visit our Web site at *http://www.fda.gov/AdvisoryCommittees/AboutAdvisoryCommittees/ucm111462.htm* for procedures on public conduct during advisory committee meetings.

Notice of this meeting is given under the Federal Advisory Committee Act (5 U.S.C. app. 2).

Dated: June 11, 2009.

Randall W. Lutter,

Deputy Commissioner for Policy.

[FR Doc. E9–14638 Filed 6–22–09; 8:45 am]

BILLING CODE 4160–01–S

DEPARTMENT OF HEALTH AND HUMAN SERVICES

National Institutes of Health

National Institute on Deafness and Other Communication Disorders; Notice of Closed Meeting

Pursuant to section 10(d) of the Federal Advisory Committee Act, as amended (5 U.S.C. App.), notice is hereby given of the following meeting.

The meeting will be closed to the public in accordance with the provisions set forth in sections 552b(c)(4) and 552b(c)(6), Title 5 U.S.C., as amended. The grant applications and the discussions could disclose confidential trade secrets or commercial property such as patentable material, and personal information concerning individuals associated with the grant applications, the disclosure of which would constitute a clearly unwarranted invasion of personal privacy.

Name of Committee: National Institute on Deafness and Other Communication Disorders Special Emphasis Panel; ARRA P30 Faculty Recruitment.

Date: July 13, 2009.

Time: 8 a.m. to 5 p.m.

Agenda: To review and evaluate grant applications.

Place: Hyatt Regency Bethesda, One Bethesda Metro Center, 7400 Wisconsin Avenue, Bethesda, MD 20814.

Contact Person: Christine A. Livingston, PhD, Scientific Review Officer, Division of Extramural Activities, National Institutes of Health/NIDCD, 6120 Executive Blvd., MSC 7180, Bethesda, MD 20892, (301) 496–8683, *livingsc@mail.nih.gov.*

(Catalogue of Federal Domestic Assistance Program Nos. 93.173, Biological Research Related to Deafness and Communicative Disorders; 93.701, ARRA Related Biomedical Research and Research Support Awards, National Institutes of Health, HHS)

Dated: June 16, 2009.

Jennifer Spaeth,

Director, Office of Federal Advisory Committee Policy.

[FR Doc. E9–14616 Filed 6–22–09; 8:45 am]

BILLING CODE 4140–01–M

DEPARTMENT OF HEALTH AND HUMAN SERVICES

Centers for Disease Control and Prevention

Disease, Disability, and Injury Prevention and Control Special Emphasis Panel (SEP): Annual Estimates of Influenza Vaccine Effectiveness for Preventing Laboratory Confirmed Influenza in the United States, Funding Opportunity Announcement (FOA) IP08–00101SUPP10, Initial Review

In accordance with section 10(a)(2) of the Federal Advisory Committee Act (Pub. L. 92–463), the Centers for Disease Control and Prevention (CDC) announces the aforementioned meeting.

Time and Date: 1 p.m.–3 p.m., August 12, 2009 (Closed).

Place: Teleconference.

Status: The meeting will be closed to the public in accordance with provisions set forth in section 552b(c)(4) and (6), Title 5 U.S.C., and the Determination of the Director, Management Analysis and Services Office, CDC, pursuant to Public Law 92–463.

Matters To Be Discussed: The meeting will include the initial review, discussion, and evaluation of ''Annual Estimates of Influenza Vaccine Effectiveness for Preventing Laboratory Confirmed Influenza in the United States, FOA IP08–00101SUPP10.''

For More Information Contact: Gregory Anderson, M.P.H., M.S., CDC, 1600 Clifton Road, NE., Mailstop E60, Atlanta, GA 30333, Telephone: (404) 498–2275.

The Director, Management Analysis and Services Office, has been delegated the authority to sign **Federal Register** notices pertaining to announcements of meetings and other committee management activities, for both CDC and the Agency for Toxic Substances and Disease Registry.

Dated: June 12, 2009.

Elaine L. Baker,

Director, Management Analysis and Services Office, Centers for Disease Control and Prevention.

[FR Doc. E9–14658 Filed 6–22–09; 8:45 am]

BILLING CODE 4163–18–P

DEPARTMENT OF HEALTH AND HUMAN SERVICES

National Institutes of Health

National Cancer Institute; Notice of Closed Meeting

Pursuant to section 10(d) of the Federal Advisory Committee Act, as amended (5 U.S.C. App.), notice is hereby given of the following meeting.

The meeting will be closed to the public in accordance with the provisions set forth in sections 552b(c)(4) and 552b(c)(6), Title 5 U.S.C., as amended. The grant applications and the discussions could disclose confidential trade secrets or commercial property such as patentable material, and personal information concerning individuals associated with the grant applications, the disclosure of which would constitute a clearly unwarranted invasion of personal privacy.

Name of Committee: National Cancer Institute Special Emphasis Panel, NCI–ARRA P30 Biomedical Research Core Centers Review.

Date: July 20–21, 2009.

Time: 8 a.m. to 5 p.m.

Agenda: To review and evaluate grant applications.

Place: Marriott Bethesda North Hotel & Conference Center, Bethesda, MD 20852.

Contact Person: Bratin K. Saha, PhD, Scientific Review Officer, Program Coordination and Referral Branch, Division of Extramural Activities, National Cancer Institute, NIH, 6116 Executive Boulevard, Room 8041, Bethesda, MD 20892. (301) 402–0371. *sahab@mail.nih.gov.*

(Catalogue of Federal Domestic Assistance Program Nos. 93.392, Cancer Construction; 93.393, Cancer Cause and Prevention Research; 93.394, Cancer Detection and Diagnosis Research; 93.395, Cancer Treatment Research; 93.396, Cancer Biology Research; 93.397, Cancer Centers Support; 93.398, Cancer Research Manpower; 93.399, Cancer Control; 93.701, ARRA Related Biomedical Research and Research Support Awards, National Institutes of Health, HHS).

Dated: June 17, 2009.

Jennifer Spaeth,

Director, Office of Federal Advisory Committee Policy.

[FR Doc. E9–14699 Filed 6–22–09; 8:45 am]

BILLING CODE 4140–01–P

DEPARTMENT OF HEALTH AND HUMAN SERVICES

National Institutes of Health

National Human Genome Research Institute; Notice of Closed Meeting

Pursuant to section 10(d) of the Federal Advisory Committee Act, as amended (5 U.S.C. App.), notice is hereby given of the following meeting.

The meeting will be closed to the public in accordance with the provisions set forth in sections 552b(c)(4) and552b(c)(6), Title 5 U.S.C., as amended. The grant applications and the discussions could disclose confidential trade secrets or commercial property such as patentable material, and personal information concerning individuals associated with the grant applications, the disclosure of which would constitute a clearly unwarranted invasion of personal privacy.

Name of Committee: National Human Genome Research Institute Special Emphasis Panel. RC2 Medical Sequencing.

Date: July 15–16, 2009.

Time: 8 a.m. to 5 p.m.

Agenda: To review and evaluate grant applications.

Place: Bethesda North Marriott and Conference Center, 5701 Marinelli Road, Bethesda, MD 20852.

Contact Person: Rudy O. Pozzatti, PhD, Scientific Review Officer, Scientific Review Branch, National Human Genome Research Institute, 5635 Fishers Lane, Suite 4076, MSC 9306, Rockville, MD 20852. (301) 402–0838. *pozzattr@mail.nih.gov.*

(Catalogue of Federal Domestic Assistance Program Nos. 93.172, Human Genome Research, National Institutes of Health, HHS)

Dated: June 17, 2009.

Jennifer Spaeth,

Director, Office of Federal Advisory Committee Policy.

[FR Doc. E9–14698 Filed 6–22–09; 8:45 am]

BILLING CODE 4140–01–P

DEPARTMENT OF HEALTH AND HUMAN SERVICES

Substance Abuse and Mental Health Services Administration

Notice Regarding Substance Abuse and Mental Health Services Administration's National Registry of Evidence-Based Programs and Practices (NREPP): Open Submission Period for Fiscal Year 2010

AGENCY: Substance Abuse and Mental Health Services Administration.

ACTION: Notice regarding Substance Abuse and Mental Health Services Administration's National Registry of Evidence-based Programs and Practices (NREPP): Open submission period for Fiscal Year 2010.

SUMMARY: The Substance Abuse and Mental Health Services Administration (SAMHSA) is committed to preventing the onset and reducing the progression of mental illness, substance abuse, and substance-related problems among all individuals. As part of this effort, SAMHSA has expanded and refined the agency's National Registry of Evidence-based Programs and Practices (NREPP). Two previous notices announcing these changes have been published in the **Federal Register** (70 FR 50381, Aug. 26, 2005; 71 FR 13133, Mar. 14, 2006). Since 2006, SAMHSA has held two open submission periods during which interventions could be submitted for potential review and inclusion on the NREPP Web site (71 FR 37590, June 30, 2006; 72 FR 30814, June 4, 2007). This notice announces the open submission period for fiscal year 2010, explains

how submissions will be screened and selected, and provides guidance on the submission process for individuals and organizations seeking to have an intervention reviewed and listed on the NREPP Web site. Potential applicants should be aware that this notice includes new information relating to the eligibility of interventions and the review process that supersedes guidance provided in earlier **Federal Register** notices.

FOR FURTHER INFORMATION CONTACT: Kevin D. Hennessy, Ph.D., Science to Service Coordinator/SAMHSA, 1 Choke Cherry Road, Room 8–1017, Rockville, MD 20857, (240) 276–2234.

Dated: June 16, 2009.

Eric B. Broderick,

Acting Administrator, SAMHSA Assistant Surgeon General.

Substance Abuse and Mental Health Services Administration's National Registry of Evidence-based Programs and Practices (NREPP): Open Submission Period for Fiscal Year 2010

Background

The Substance Abuse and Mental Health Services Administration's (SAMHSA) National Registry of Evidence-based Programs and Practices (NREPP) is a voluntary rating system designed to provide the public with reliable information about interventions that promote mental health or prevent or treat mental illness, substance use disorders, or co-occurring disorders. Programs and practices that are accepted for inclusion in the registry undergo two independent review processes in which their (1) quality of research and (2) readiness for dissemination are evaluated and rated. The results of these reviews are published on the NREPP Web site (*http://nrepp.samhsa.gov*).

It should be noted that inclusion in NREPP does not constitute endorsement of an intervention by SAMHSA. Moreover, since NREPP has not reviewed all interventions, the use of NREPP as an exclusive or exhaustive list of interventions is not appropriate. Policymakers and funders in particular are discouraged from limiting contracted providers and/or potential grantees to selecting only among NREPP interventions.

This notice announces the next open submission period during which SAMHSA will consider and accept new applications for review, describes the minimum requirements and other considerations that will be used in screening and selecting interventions, and provides guidance on the submission process.

Dates of Open Submission Period

SAMHSA has established a 4-month period for receipt of NREPP submissions for fiscal year 2010 that will begin October 1, 2009, and end February 1, 2010. Interventions submitted after February 1, 2010, will not be considered during this submission cycle. Program developers, researchers, and others interested in submitting an intervention should read this notice for information about current minimum requirements and examine the information provided on the NREPP Web site about the review process and review criteria (*http://nrepp.sarnhsa.gov/review.asp*). The selection of interventions will take place after the closing of the open submission period, and applicants will be informed of their acceptance status at that time. The number of reviews conducted will depend on the availability of funds, with the final selection of interventions and the timing of reviews to be determined at the discretion of SAMHSA.

In submitting an intervention, applicants understand that the results of NREPP reviews are considered public information and will be posted on the NREPP Web site. Once a review is completed, the applicant will be provided with a summary document (''intervention summary'') that presents ratings and descriptive information about the intervention. Applicants are encouraged to view examples of NREPP intervention summaries on the NREPP Web site to become familiar with the end product of the review process.

Minimum Requirements

To be considered for review, interventions must meet four minimum requirements:

1. The intervention has produced one or more positive behavioral outcomes (p≤.O5) in mental health or substance use among individuals, communities, or populations.

2. Evidence of these outcomes has been demonstrated in at least one study using an experimental or quasi-experimental design. Experimental designs require random assignment, a control or comparison group, and pre- and postintervention assessments. Quasi-experimental designs do not require random assignment but do require a comparison or control group and pre- and postintervention assessments; this category includes longitudinal/multiple time series designs with at least three preintervention or baseline measurements and at least three postintervention or follow-up measurements.

3. The results of these studies have been published in a peer-reviewed journal or other publication or documented in a comprehensive evaluation report. Comprehensive evaluation reports must include a review of the literature, theoretical framework, purpose, methodology, findings/results, discussion, and conclusions.

4. Implementation materials, training and support resources, and quality assurance procedures have been developed and are ready for use by the public.

Applicants are required to provide documentation at the time of submission that demonstrates that the intervention meets these minimum requirements. Table 1 lists examples of appropriate supporting documentation.

TABLE 1—DOCUMENTATION FOR DEMONSTRATING COMPLIANCE WITH MINIMUM REQUIREMENTS

	Minimum requirement	Documentation
Quality of Research	1. Intervention has produced one or more positive behavioral outcomes (p. ≤ .05) in mental health or substance use among individuals, communities, or populations.	A list of significant behavioral outcomes that includes supporting citations for each outcome; and
	2. Evidence of these outcomes has been demonstrated in at least one study using an experimental or quasiexperimental design.	A full-text copy of each article/report cited in the list of outcomes. Other research articles, published or unpublished evaluation reports, grant final reports, and replication studies may be submitted as additional supporting documentation.

TABLE 1—DOCUMENTATION FOR DEMONSTRATING COMPLIANCE WITH MINIMUM REQUIREMENTS—Continued

	Minimum requirement	Documentation
	3. Results of these studies have been published in a peer-reviewed journal or other publication or documented in a comprehensive evaluation report.	*Note:* Abstracts or URLs to partial articles are regarded as incomplete and will not be considered.
Readiness for Dissemination	4. Implementation materials, training and support resources, and quality assurance procedures have been developed and are ready for use by the public.	Brief narrative description and list of available materials, resources, and systems to support implementation (e.g., treatment manuals, information for administrators, tested training curricula, mechanisms for ongoing supervision and consultation, protocols for gathering process and outcome data, ongoing monitoring of intervention fidelity, processes for gathering feedback).

The following types of interventions are not eligible for review and should not be submitted to NREPP:

1. Stand-alone pharmacologic treatments—The evidence base for pharmacologic treatments is reviewed and approved through the U.S. Food and Drug Administration (FDA). FDA-approved pharmacotherapy interventions (on label use) are considered for NREPP review only when combined with one or more behavioral or psychosocial treatments.

2. Stand-alone smoking prevention and/or cessation interventions—Interventions to prevent or reduce tobacco use are eligible for NREPP review only when conducted as part of a program that also addresses the prevention or treatment of alcohol or other drugs of abuse.

Selection of Interventions for Review

All submissions meeting the minimum requirements will be considered eligible for review. The priority point system described in past **Federal Register** notices will no longer be used in the prioritization of submissions. In selecting interventions for review, SAMHSA may choose to give special consideration to interventions that meet one or more of the following conditions:

- The original investigator(s) or an independent party has used the same protocol with an identical or similar target population, and/or has used a slightly modified protocol based on a slightly modified population, where results are consistent with positive findings from the original evaluation.
- Implementation materials (e.g., program manuals, training guides, measurement instruments, implementation fidelity guides) are available to the public at no cost.
- The intervention targets underserved populations (e.g., minority populations, elderly, young adults, and individuals who are incarcerated). The intervention contributes to a content area where there are currently limited evidence-based interventions.

Interventions that are not selected for review may be resubmitted by the applicant in a future open submission period.

Instructions for Submitting an Intervention

To submit an intervention, individuals should send a written statement to NREPP expressing their interest along with documentation that demonstrates that the intervention meets the minimum requirements as described above. All submissions must be made either by a principal investigator (PI) who has conducted research on the intervention, a project director (PD) who has worked with an evaluator of the intervention, or a formally authorized delegate of the PI or PD. For information on where to submit materials, please call 1–866–436–7377. Electronic submissions are preferred, but materials may be sent to NREPP in hard copy via postal mail or fax. To be eligible for consideration, submissions must be received no later than 11:59 pm EST on February 1, 2010; those received before October 1, 2009, will be disregarded.

If an intervention is accepted, the PI will be contacted and asked to submit additional documentation to be used in the review. This additional documentation includes full-text copies of all articles and reports that provide evidence of significant outcomes ($p \leq .05$) as well as 8 copies of selected dissemination materials in the format they are provided to the public (e.g., hard copies or electronic versions of manuals, training presentations, tools, quality assurance protocols; URLs for interactive Web-based resources).

The PI is expected to serve as the main point of contact throughout the remainder of the review process, including approval of the final intervention summary that is developed by NREPP staff once the review has been completed.

Contact Information

Individuals who have questions about the information contained in this notice may write to NREPP staff at *nrepp@samhsa.hhs.gov* or call 1–866–436–7377.

[FR Doc. E9–14621 Filed 6–22–09; 8:45 am]

BILLING CODE 4160–01–M

DEPARTMENT OF HEALTH AND HUMAN SERVICES

Health Resources and Services Administration

Recruitment of Sites for Assignment of Corps Personnel Obligated Under the National Health Service Corps Scholarship Program

AGENCY: Health Resources and Services Administration, HHS.

ACTION: General notice.

SUMMARY: The Health Resources and Services Administration (HRSA) announces that the listing of entities, and their Health Professional Shortage Area (HPSA) scores, that will receive priority for the assignment of National Health Service Corps (NHSC) scholarship recipients (Corps Personnel, Corps members) during the period July 1, 2009, through June 30, 2010, is posted on the NHSC Web site at *http://nhscjobs.hrsa.gov/*. This list specifies which entities are eligible to receive assignment of Corps members who are participating in the NHSC Scholarship Program. A separate **Federal Register** Notice pertaining to sites eligible to receive NHSC Loan Repayment Program participants and non-obligated individuals was published on May 28, 2009 (74 FR 25568). Please note that not all vacancies associated with sites on the list described below will be for Corps members, but could be for NHSC Scholarship Program participants

serving their obligation through the Private Practice Option.

Eligible HPSAs and Entities

To be eligible to receive assignment of Corps personnel, entities must: (1) Have a current HPSA designation by the Office of Shortage Designation, Bureau of Health Professions, HRSA; (2) not deny requested health care services, or discriminate in the provision of services to an individual because the individual is unable to pay for the services or because payment for the services would be made under Medicare, Medicaid, or the State Children's Health Insurance Program (SCHIP); (3) enter into an agreement with the State agency that administers Medicaid and SCHIP, accept assignment under Medicare, see all patients regardless of their ability to pay, and use and post a discounted fee plan; and (4) be determined by the Secretary to have (a) a need and demand for health manpower in the area; (b) appropriately and efficiently used Corps members assigned to the entity in the past; (c) general community support for the assignment of Corps members; (d) made unsuccessful efforts to recruit; (e) a reasonable prospect for sound fiscal management by the entity with respect to Corps members assigned there; and (f) demonstrated a willingness to support and facilitate mentorship, professional development, and training opportunities for Corps members. Priority in approving applications for assignment of Corps members goes to sites that (1) provide primary medical care, mental health, and/or oral health services to a primary medical care, mental health, or dental HPSA of greatest shortage, respectively; (2) are part of a system of care that provides a continuum of services, including comprehensive primary health care and appropriate referrals or arrangements for secondary and tertiary care; (3) have a documented record of sound fiscal management; and (4) will experience a negative impact on its capacity to provide primary health services if a Corps member is not assigned to the entity.

Entities that receive assignment of Corps personnel must assure that (1) the position will permit the full scope of practice and that the clinician meets the credentialing requirements of the State and site; and (2) the Corps member assigned to the entity is engaged in full-time clinical practice at the approved service location. For all health professionals except those noted below, ''full-time clinical practice'' means a minimum of 40 hours per week with at least 32 hours per week spent providing direct outpatient care in the approved ambulatory care setting. The remaining hours may be spent providing care for patients of the practice in approved alternative settings such as hospitals, or performing practice-related administrative duties (not to exceed 8 hours per week). Obstetricians/gynecologists, certified nurse midwives (CNMs), and family practitioners who practice obstetrics on a regular basis are required to engage in a minimum of 21 hours per week of outpatient clinical practice. The remaining hours, making up the minimum 40-hour per week total, include delivery and other clinical hospital-based duties, as well as practice-related administrative duties (not to exceed 8 hours per week). For psychiatrists, at least 21 of the minimum 40 hours per week must be spent providing direct patient counseling during normally scheduled office hours in the ambulatory outpatient care setting. The remaining hours must be spent providing clinical services in approved alternative settings, or performing practice-related administrative activities (not to exceed 8 hours per week.) For all Corps personnel, time spent on-call does not count toward the 40 hours per week. In addition, sites receiving assignment of Corps personnel are expected to (1) report to the NHSC all absences, including those in excess of the authorized number of days (up to 35 work days or 280 hours per service year); (2) report to the NHSC any change in the status of an NHSC clinician at the site; (3) provide the time and leave records, schedules, and any related personnel documents for NHSC assignees (including documentation, if applicable, of the reason(s) for the termination of an NHSC clinician's employment at the site prior to his or her obligated service end date); and (4) submit a Uniform Data System (UDS) report. The UDS system allows the site to assess the age, sex, race/ethnicity of, and provider encounter records for, its user population. The UDS reports are site specific. Providers fulfilling NHSC commitments are assigned to a specific site or, in some cases, more than one site. The scope of activity to be reported in UDS includes all activity at the site(s) to which the Corps member is assigned.

Evaluation and Selection Process

In order for a site to be eligible for placement of NHSC personnel, it must be approved by the NHSC following the site's submission of a Multi-Year Recruitment and Retention (R&R) Assistance Application. The R&R Application approval is good for a period of 3 years from the date of approval.

In approving applications for the assignment of Corps members, the Secretary shall give priority to any such application that is made regarding the provision of primary health services to a HPSA with the greatest shortage. For the program year July 1, 2009, through June 30, 2010, HPSAs of greatest shortage for determination of priority for assignment of NHSC scholarship-obligated Corps personnel will be defined as follows: (1) Primary medical care HPSAs with scores of 17 and above are authorized for the assignment of NHSC scholarship recipients who are primary care physicians, family nurse practitioners (NPs), physician assistants (PAs), or CNMs; (2) mental health HPSAs with scores of 17 and above are authorized for the assignment of NHSC scholarship recipients who are psychiatrists; (3) dental HPSAs with scores of 17 and above are authorized for the assignment of NHSC scholarship recipients who are dentists. Given the lower number of scholars available for placement in this cycle, the NHSC has determined that a minimum HPSA score of 17 will enable it to meet its statutory obligation to identify approved service sites at least equal to, but not greater than twice, the number of NHSC scholars available to serve.

The number of new NHSC placements through the Scholarship Program allowed at any one site is limited to the following:

(1) Primary Medical Care:

No more than 1 physician (MD or DO); and no more than 1 NP, PA, or CNM.

(2) Dental:

No more than 1 dentist.

(3) Mental Health:

No more than 1 psychiatrist.

Application Requests, Dates and Address

The list of HPSAs and entities that are eligible to receive priority for the placement of Corps personnel may be updated periodically. Entities that no longer meet eligibility criteria, including those sites whose NHSC 3-year approval has lapsed or whose HPSA designation is withdrawn, will be removed from the priority listing. New entities interested in being added to the high priority list must submit a Multi-Year NHSC R&R Assistance Application to: National Health Service Corps, 5600 Fishers Lane, Room 8A–30, Rockville, MD 20857, fax 301–594–2721.

Entities interested in receiving application materials may do so by calling the HRSA call center at 1–800–221–9393. They may also get information and download application

materials at: *http://nhsc.hrsa.gov/communities/apply.htm.*

A listing of HPSAs and their scores is posted at *http://hpsafind.hrsa.gov/.*

Additional Information

Entities wishing to provide additional data and information in support of their inclusion on the proposed list of HPSAs and entities that would receive priority in assignment of scholarship-obligated Corps members must do so in writing no later than July 23, 2009. This information should be submitted to: Mark Pincus, Director, Division of Site and Clinician Recruitment, Bureau of Clinician Recruitment and Service, 5600 Fishers Lane, Room 8A–55, Rockville, MD 20857. This information will be considered in preparing the final list of HPSAs and entities that are receiving priority for the assignment of scholarship-obligated Corps personnel.

Paperwork Reduction Act: The R&R Assistance Application has been approved by the Office of Management and Budget under the Paperwork Reduction Act. The OMB clearance number is 0915–0230 and expires September 30, 2011.

The program is not subject to the provisions of Executive Order 12372, Intergovernmental Review of Federal Programs (as implemented through 45 CFR part 100).

Dated: June 17, 2009.

Mary K. Wakefield,

Administrator.

[FR Doc. E9–14741 Filed 6–22–09; 8:45 am]

BILLING CODE 4165–15–P

DEPARTMENT OF HOMELAND SECURITY

Transportation Security Administration

Extension of Agency Information Collection Activity Under OMB Review: TSA Claims Management Program

AGENCY: Transportation Security Administration, DHS.

ACTION: 30-day Notice.

SUMMARY: This notice announces that the Transportation Security Administration (TSA) has forwarded the Information Collection Request (ICR), OMB control number 1652–0039, abstracted below to the Office of Management and Budget (OMB) for renewal in compliance with the Paperwork Reduction Act. The ICR describes the nature of the information collection and its expected burden. TSA published a **Federal Register** notice, with a 60-day comment period soliciting comments, of the following collection of information on April 1, 2009, at 74 FR 14808. The collection involves the submission of information from claimants in order to thoroughly examine and resolve tort claims against the agency.

DATES: Send your comments by July 23, 2009. A comment to OMB is most effective if OMB receives it within 30 days of publication.

ADDRESSES: Comments may be mailed or delivered to Ginger LeMay, PRA Officer, Office of Information Technology, TSA–11, Transportation Security Administration, 601 South 12th Street, Arlington, VA 20596–6011. Interested persons are invited to submit written comments on the proposed information collection to the Office of Information and Regulatory Affairs, Office of Management and Budget. Comments should be addressed to Desk Officer, Department of Homeland Security/TSA, and sent via electronic mail to *oira_submission@omb.eop.gov* or faxed to (202) 395–6974.

FOR FURTHER INFORMATION CONTACT: Ginger LeMay, Office of Information Technology, TSA–11, Transportation Security Administration, 601 South 12th Street, Arlington, VA 20598–6011; telephone (571) 227–3616 or e-mail *ginger.lemay@dhs.gov.*

SUPPLEMENTARY INFORMATION:

Comments Invited

In accordance with the Paperwork Reduction Act of 1995 (44 U.S.C. 3501 *et seq.*), an agency may not conduct or sponsor, and a person is not required to respond to, a collection of information unless it displays a valid OMB control number. The ICR documentation is available at *http://www.reginfo.gov.* Therefore, in preparation for OMB review and approval of the following information collection, TSA is soliciting comments to—

(1) Evaluate whether the proposed information requirement is necessary for the proper performance of the functions of the agency, including whether the information will have practical utility;

(2) Evaluate the accuracy of the agency's estimate of the burden;

(3) Enhance the quality, utility, and clarity of the information to be collected; and

(4) Minimize the burden of the collection of information on those who are to respond, including using appropriate automated, electronic, mechanical, or other technological collection techniques or other forms of information technology.

Information Collection Requirement

Title: TSA Claims Management System.

Type of Request: Renewal of one currently approved Information Collection Request (ICR).

OMB Control Number: 1652–0039.

Form(s): Supplemental Information Form, Payment Form.

Affected Public: Members of the traveling public who believe they have experienced property loss or damage, a personal injury, or other damages due to the negligence or wrongful act or omission of a TSA employee and decide to seek compensation by filing a Federal tort claim against TSA.

Abstract: Submission of a claim is entirely voluntary and initiated by individuals. The claimants (or respondents) to this collection are typically the traveling public. Currently, claimants file a tort claim by submitting to TSA a Standard Form 95 (SF–95), which has been approved under OMB control number 1105–0008. Because TSA requires further clarifying information to thoroughly examine their claim, claimants are asked to complete a Supplemental Information page added to the SF–95. The Supplemental Information page requests claimants to provide additional claim information including: (1) E-mail address, (2) Airport name, (3) Location of incident within the airport, (4) Complete travel itinerary, (5) Whether baggage was delayed by airline, (6) Why they believe TSA was negligent, (7) Whether they used a third-party baggage service, (8) Whether they were traveling under military orders, and (9) Whether they submitted claims with the airlines or insurance.

If TSA determines payment is warranted, TSA will then send the claimant a separate form requesting: (1) Claimant signature, (2) banking information (bank routing number and account number), and (3) Social Security number (required by the U.S. Treasury for all Government payments to the public pursuant to 31 U.S.C. 3325).

Claims instructions and forms are available through the TSA Web site at *http://www.tsa.gov.* Claimants must download these forms and mail or fax them to TSA. TSA will use all data collected from claimants to examine and analyze tort claims against the agency to determine alleged TSA liability and to reimburse claimants when the claims are approved. In some cases, TSA may use the information to identify victims of theft or to aid any criminal investigations into property theft.

Number of Respondents: 22,800.

Estimated Annual Burden Hours: An estimated 11,400 hours annually.

Issued in Arlington, Virginia, on June 17, 2009.

Ginger LeMay,

Paperwork Reduction Act Officer, Business Improvements and Communications, Office of Information Technology.

[FR Doc. E9–14647 Filed 6–22–09; 8:45 am]

BILLING CODE 9110–05–P

DEPARTMENT OF HOMELAND SECURITY

U.S. Citizenship and Immigration Services

[CIS No. 2477–09; DHS Docket No. USCIS–2009–0019]

RIN 1615–ZA88

Request for Public Comment on the E-Verify Program Designated Agent Process

AGENCY: U.S. Citizenship and Immigration Services, DHS.

ACTION: Notice.

SUMMARY: U.S. Citizenship and Immigration Services (USCIS) seeks public comment on the E-Verify Program Designated Agent Process under which a participating employer may choose to outsource submission of employment eligibility verification queries for newly hired employees to a Designated Agent.

DATES: This Notice is effective June 23, 2009. Please submit your comments or suggestions for improving the Designated Agent process by August 24, 2009.

ADDRESSES: Please submit your written comments and suggestions by e-mail to *DAsupport@dhs.gov* and include ''DA Re-Engineering Comment'' in the subject line of your e-mail. When submitting your comments or suggestions, please let us know whether you access the E-Verify Program directly, or whether you developed and use a web services interface to access the E-Verify Program.

FOR FURTHER INFORMATION CONTACT: Cassandra Stekly, Department of Homeland Security, U.S. Citizenship and Immigration Services (USCIS), Verification Division, 470–490 East L'Enfant Plaza, SW., Suite 8001, Washington, DC 20529–2630; *Telephone:* (888) 464–4218.

SUPPLEMENTARY INFORMATION: The E-Verify Program is a free employment eligibility confirmation system operated jointly by USCIS and the Social Security Administration (SSA). It is designed to determine the employment eligibility of new hires. The E-Verify Program allows participating employers to electronically confirm the employment eligibility of newly hired employees to help maintain a stable and legal workforce.

An E-Verify Designated Agent is a liaison between E-Verify and employers who choose to outsource submission of employment eligibility verification queries for newly hired employees. E-Verify Designated Agents conduct the verification process for other employers or clients. An E-Verify Designated Agent must register online and sign a Memorandum of Understanding (MOU) with SSA and DHS. Once the MOU is approved, the E-Verify Designated Agent can then begin registering employers and clients who have designated it to perform their verification services.

The program design for Designated Agents has changed very little over the past several years. Accordingly, USCIS plans to review the Designated Agent process to assess how Designated Agents provide this service to their clients. The purpose of this notice is to request that Designated Agents, their clients, or others with Designated Agent experience provide their comments or suggestions for improving the Designated Agent process.

Paperwork Reduction Act

The E-Verify Program has been approved by the Office of Management and Budget under the Paperwork Reduction Act. The approved OMB Control Number is 1615–0092.

Michael Aytes,

Acting Deputy Director, U.S. Citizenship and Immigration Services.

[FR Doc. E9–14641 Filed 6–22–09; 8:45 am]

BILLING CODE 9111–97–P

NATIONAL INDIAN GAMING COMMISSION

Notice of Approved Class II and III Tribal Gaming Ordinances

AGENCY: National Indian Gaming Commission.

ACTION: Notice.

SUMMARY: The purpose of this notice is to inform the public of class II and III gaming ordinances approved by the Chairman of the National Indian Gaming Commission.

DATES: *Effective Date:* This notice is effective upon date of publication in the **Federal Register**.

FOR FURTHER INFORMATION CONTACT: Ms. Frances Fragua, Office of General Counsel at the National Indian Gaming Commission, 202–632–7003, or by facsimile at 202–632–7066 (not toll-free numbers).

SUPPLEMENTARY INFORMATION: The Indian Gaming Regulatory Act (IGRA) 25 U.S.C. 2701 *et seq.*, established the National Indian Gaming Commission (Commission). Section 2710 of the IGRA authorizes the Chairman of the Commission to approve class II and class III tribal gaming ordinances. Section 2710(d)(2)(B) of the IGRA, as implemented by 25 CFR 522.8, requires the Commission to publish, in the **Federal Register**, approved class III gaming ordinances and the approvals thereof.

The Commission believes that publishing a periodic notice of approved class II or III gaming ordinances in the **Federal Register**, along with publishing on the Commission's Web site the full text of each ordinance and any approved amendments, is sufficient to meet the requirements of 25 U.S.C. Section 2710(d)(2)(B) and provide the public with adequate notice of all gaming ordinance approvals. Every approved gaming ordinance, every approved ordinance amendment, and the approvals thereof, are posted on the Commission's Web site (*http://www.nigc.gov*) under Reading Room, Gaming Ordinances. Also, the Commission will make copies of approved ordinances available to the public upon request. Requests can be made in writing to the Office of General Counsel, National Indian Gaming Commission, Attn: Frances Fragua, 1441 L Street, NW., Suite 9100, Washington, DC 20005.

The following constitutes a consolidated list of all Tribes for which the Chairman has approved tribal gaming ordinances authorizing class II or III gaming.

1. Absentee-Shawnee Tribe of Oklahoma
2. Agua Caliente Band of Cahuilla Indians
3. Ak-Chin Indian Community
4. Alabama-Quassarte Tribal Town
5. Alturas Indian Rancheria
6. Apache Tribe of Oklahoma
7. Assiniboine & Sioux Tribes of Fort Peck
8. Augustine Band of Mission Indians
9. Bad River Band of Lake Superior Tribe of Chippewa
10. Barona Band of Mission Indians
11. Bay Mills Indian Community
12. Bear River Band of Rohnerville Rancheria
13. Berry Creek Rancheria of Tyme Maidu Indians

14. Big Lagoon Rancheria
15. Big Pine Paiute Tribe of the Owens Valley
16. Big Sandy Rancheria Band of Western Mono Indians
17. Big Valley Band of Pomo Indians
18. Blackfeet Tribe
19. Blue Lake Rancheria of California
20. Bois Forte Band of Minnesota Chippewa
21. Bridgeport Paiute Indian Community of California
22. Buena Vista Rancheria of Me-Wuk Indians
23. Burns Paiute Tribe
24. Cabazon Band of Mission Indians
25. Cachil Dehe Band of Wintun Indians of the Colusa Indian Community
26. Caddo Indians Tribe of Oklahoma
27. Cahto Tribe of the Laytonville Rancheria
28. Cahuilla Band of Mission Indians
29. California Valley Me-Wuk Tribe
30. Campo Band of Diegueno Mission Indians
31. Cayuga Nation of of New York
32. Chemehuevi Indian Tribe
33. Cher-Ae Heights Indian Community of the Trinidad Rancheria
34. Cherokee Nation of Oklahoma
35. Cheyenne and Arapaho Tribes of Oklahoma
36. Cheyenne River Sioux Tribe
37. Chickasaw Nation of Oklahoma
38. Chicken Ranch Band of Me-wuk Indians
39. Chippewa Cree Tribe of the Rocky Boy's Reservation
40. Chitimacha Tribe of Louisiana
41. Choctaw Nation of Oklahoma
42. Citizen Band Potawatomi Indians of Oklahoma
43. Cloverdale Rancheria of Pomo Indians
44. Cocopah Indian Tribe
45. Coeur d'Alene Tribe
46. Colorado River Indian Tribes
47. Comanche Indian Tribe of Oklahoma
48. Confederated Salish and Kootenai Tribes of the Flathead Reservation
49. Confederated Tribes and Bands of the Yakama
50. Confederated Tribes of Coos, Lower Umpqua and Siuslaw
51. Confederated Tribes of the Chehalis Reservation
52. Confederated Tribes of the Colville Reservation
53. Confederated Tribes of the Grand Ronde Community
54. Confederated Tribes of the Siletz Indians of Oregon
55. Confederated Tribes of the Umatilla Indian Reservation
56. Confederated Tribes of the Warm Springs Reservation
57. Coquille Indian Tribe of Oregon
58. Coushatta Indian Tribe of Louisiana
59. Cow Creek Band of Umpqua Indians
60. Cowlitz Indian Tribe
61. Coyote Valley Band of Pomo Indians
62. Crow Creek Sioux Tribe
63. Crow Indian Tribe of Montana
64. Delaware Tribe of Indians of Oklahoma
65. Delaware Nation of Western Oklahoma
66. Dry Creek Rancheria of Pomo Indians
67. Eastern Band of Cherokee Indians of North Carolina
68. Eastern Shawnee Tribe of Oklahoma
69. Eastern Shoshone Tribe of the Wind River Indian Reservation
70. Elem Indian Colony of Pomo Indians
71. Elk Valley Rancheria
72. Ely Shoshone Tribe
73. Enterprise Rancheria of the Maidu Indians
74. Ewiiaapaayp Band of Kumeyaay Indians
75. Fallon Paiute-Shoshone Tribes
76. Federated Indians of Graton Rancheria
77. Flandreau Santee Sioux Tribe
78. Fond du Lac Reservation
79. Forest County Potawatomi Community
80. Fort Belknap Indian Community
81. Fort Independence Indian Reservation
82. Fort McDermitt Paiute-Shoshone Indian Tribe
83. Fort McDowell Yavapai Nation of Arizona
84. Fort Mojave Indian Tribe
85. Fort Sill Apache Tribe of Oklahoma
86. Gila River Indian Community
87. Grand Portage Band of Minnesota Indians
88. Grand Traverse Band of Ottawa and Chippewa
89. Greenville Rancheria of Maidu Indians
90. Grindstone Indian Rancheria of Wintun
91. Guidiville Indian Reservation
92. Habematolel Pomo of Upper Lake
93. Hannahville Indian Community
94. Ho-Chunk Nation of Wisconsin
95. Hoopa Valley Tribe
96. Hopland Band of Pomo Indians
97. Hualapai Indian Tribe
98. Iowa Tribe of Kansas and Nebraska
99. Iowa Tribe of Oklahoma
100. Jackson Rancheria Band of Me-wuk Indians
101. Jamestown S'Klallam Tribe
102. Jamul Indian Village of California
103. Jena Band of Choctaw Indians
104. Jicarilla Apache Nation
105. Kaibab Band of Paiute Indians
106. Kalispel Tribe of Indians
107. Karuk Tribe of California
108. Kaw Nation of Oklahoma
109. Keweenaw Bay Indian Community
110. Kialegee Tribal Town of Oklahoma
111. Kickapoo Traditional Tribe of Texas
112. Kickapoo Nation of Kansas
113. Kickapoo Tribe of Oklahoma
114. Kiowa Tribe of Oklahoma
115. Klamath Tribes of Oregon
116. Klawock Cooperative Association
117. Kootenai Tribe of Idaho
118. LaJolla Band of Luiseno Mission Indians
119. La Posta Band of Diegueno Mission Indians
120. Lac Courte Oreilles Band of Lake Superior Chippewa
121. Lac du Flambeau Band of Lake Superior Chippewa
122. Lac Vieux Desert Band of Lake Superior Chippewa
123. Las Vegas Paiute Tribe
124. Leech Lake Band of Ojibwe Indians
125. Little River Band of Ottawa Chippewa
126. Little Traverse Bay Bands of Odawa Indians
127. Lower Brule Sioux Tribe
128. Lower Elwha Klallam Tribe
129. Lower Sioux Indian Community
130. Lummi Tribe of the Lummi Reservation
131. Lytton Band of Pomo Indians
132. Makah Indian Tribe of the Makah Indian Reservation
133. Manchester Band of Pomo Indians
134. Manzanita Band of Diegueno Mission Indians
135. Mashantucket Pequot Tribe of Connecticut
136. Match-E-Be-Nash-She-Wish Band of Potawatomi Indians of Michigan
137. Mechoopda Indian Tribe of Chico Rancheria
138. Menominee Indian Tribe of Wisconsin
139. Mescalero Apache Tribe
140. Metlakatla Indian Community of Annette Island of Alaska
141. Miami Tribe of Oklahoma
142. Miccosukee Tribe of Indians of Florida
143. Middletown Rancheria of Pomo Indians
144. Mille Lacs Band of Minnesota Chippewa
145. Mississippi Band of Choctaw Indians
146. Moapa Band of Pauites
147. Modoc Tribe of Oklahoma

148. Mohegan Indian Tribe of Connecticut
149. Mooretown Rancheria of Maidu Indians
150. Morongo Band of Cahuilla Mission Indians
151. Muckleshoot Indian Tribe
152. Muscogee (Creek) Nation of Oklahoma
153. Narragansett Indian Tribe
154. Navajo Nation
155. Nez Perce Tribe of Idaho
156. Nisqually Indian Tribe
157. Nooksack Indian Tribe of Washington
158. Northern Arapaho Tribe of the Wind River Indians
159. Northern Cheyenne Tribe
160. Nottawaseppi Huron Band of Potawatomi
161. Oglala Sioux Tribe of Pine Ridge
162. Ohkay Owingeh
163. Omaha Tribe of Nebraska
164. Oneida Nation of New York
165. Oneida Tribe of Indians of Wisconsin
166. Organized Village of Kake
167. Osage Tribe of Oklahoma
168. Otoe-Missouria Tribe of Oklahoma
169. Ottawa Tribe of Oklahoma
170. Paiute-Shoshone Indians of the Bishop Community of the Bishop Colony
171. Pala Band of Luiseno Mission Indians
172. Pascua Yaqui Tribe of Arizona
173. Paskenta Band of Nomlaki Indians
174. Passamaquoddy Tribe
175. Pauma-Yuima Band of Luiseno Mission Indians
176. Pawnee Nation of Oklahoma
177. Pechanga Band of Luiseno Mission Indians
178. Peoria Tribe of Indians of Oklahoma
179. Picayune Rancheria of Chukchansi Indians
180. Pinoleville Indian Reservation
181. Pit River Tribe
182. Poarch Band of Creek Indians
183. Pokagon Band of Potawatomi Indians
184. Ponca Nation of Oklahoma
185. Ponca Tribe of Nebraska
186. Port Gamble S'Klallam Indian Community
187. Prairie Band of Potawatomi Nation in Kansas
188. Prairie Island Indian Community
189. Pueblo of Acoma
190. Pueblo of Isleta
191. Pueblo of Jemez
192. Pueblo of Laguna
193. Pueblo of Nambe
194. Pueblo of Picuris
195. Pueblo of Pojoaque
196. Pueblo of San Felipe
197. Pueblo of San Ildefonso
198. Pueblo of Sandia
199. Pueblo of Santa Ana
200. Pueblo of Santa Clara
201. Pueblo of Santo Domingo
202. Pueblo of Taos
203. Pueblo of Tesuque
204. Puyallup Tribe of Indians
205. Pyramid Lake Paiute Tribe
206. Quapaw Tribe of Indians of Oklahoma
207. Quartz Valley Indian Comminity
208. Quechan Tribe of Fort Yuma
209. Quileute Tribe
210. Quinault Indian Tribe
211. Red Cliff Band of Lake Superior Chippewa Indians
212. Red Cliff, Sokaogon Chippewa and Lac Courte Oreilles Band
213. Red Lake Band of Chippewa Indians
214. Redding Rancheria
215. Redwood Valley Rancheria of Pomo Indians
216. Reno-Sparks Indian Colony
217. Resighini Rancheria of Coast Indian Community
218. Rincon San Luiseno Band of Mission Indians
219. Robinson Rancheria of Pomo Indians
220. Rosebud Sioux Tribe
221. Round Valley Indian Tribes
222. Rumsey Indian Rancheria of Wintun Indians
223. Sac & Fox Nation of Oklahoma
224. Sac & Fox Tribe of Mississippi in Iowa
225. Sac & Fox Nation of Missouri in Kansas and Nebraska
226. Saginaw Chippewa Indian Tribe of Michigan
227. Salt River Pima-Maricopa Indian Community
228. Samish Indian Tribe of Washington
229. San Carlos Apache Tribe of Arizona
230. San Manuel Band of Serrano Mission Indians
231. San Pasqual Band of Diegueno Mission Indians
232. Santa Rosa Band of Tachi Indians
233. Santa Ynez Band of Chumash Mission Indians
234. Santa Ysabel Band of Diegueno Mission Indians
235. Santee Sioux Nation
236. Sauk-Suiattle Indian Tribe
237. Sault Ste. Marie Tribe of Chippewa Indians
238. Scotts Valley Band of Pomo Indians
239. Seminole Tribe of Florida
240. Seminole Tribe of Oklahoma
241. Seneca Nation of Indians of New York
242. Seneca-Cayuga Tribe of Oklahoma
243. Shakopee Mdewakanton Sioux Community
244. Shawnee Tribe of Oklahoma
245. Sherwood Valley Rancheria of Pomo Indians
246. Shingle Springs Band of Miwok Indians
247. Shoalwater Bay Indian Tribe
248. Shoshone-Bannock Tribes of Fort Hall
249. Sisseton-Wahpeton Sioux Tribe of Lake Traverse Reservation
250. Skokomish Indian Tribe
251. Smith River Rancheria
252. Snoqualmie Tribe of Washington
253. Soboba Band of Mission Indians
254. Sokaogon Chippewa Community
255. Southern Ute Indian Tribe
256. Spirit Lake Sioux Tribe
257. Spokane Tribe of Indians
258. Squaxin Island Tribe
259. St. Croix Chippewa Indians of Wisconsin
260. St. Regis Mohawk Tribe of New York
261. Standing Rock Sioux Tribe
262. Stillaguamish Tribe of Indians
263. Stockbridge-Munsee Community
264. Suquamish Indian Tribe
265. Susanville Indian Rancheria
266. Swinomish Indian Tribal Community
267. Sycuan Band of Mission Indians
268. Table Mountain Rancheria
269. Te-Moak Tribe of Western Shoshone
270. Thlopthlocco Tribal Town
271. Three Affiliated Tribes of the Fort Berthold Reservation
272. Timbisha Shoshone Tribe
273. Tohono O'odham Nation
274. Tonkawa Tribe of Indians of Oklahoma
275. Tonto Apache Tribe
276. Torres Martinez Desert Cahuilla Indians
277. Tulalip Tribes of Washington
278. Tule River Tribe
279. Tunica-Biloxi Tribe of Louisiana
280. Tuolumne Band of Me-Wuk Indians
281. Turtle Mountain Band of Chippewa Indians
282. Twenty Nine Palms Band of Mission Indians
283. United Auburn Indian Community
284. United Keetoowah Band of Cherokee Indians
285. Upper Sioux Community
286. Upper Skagit Indian Tribe of Washington
287. Ute Mountain Ute Tribe
288. U-tu Utu Gwaitu Paiute Tribe of Benton Paiute Reservation
289. Viejas Band of Mission Indians
290. Washoe Tribe of Nevada and California
291. White Earth Band of Minnesota Chippewa Indians

292. White Mountain Apache Tribe
293. Wichita and Affiliated Tribes of Oklahoma
294. Winnebago Tribe of Nebraska
295. Wiyot Tribe of Table Bluff Reservation
296. Wyandotte Nation of Oklahoma
297. Yankton Sioux Tribe
298. Yavapai Apache Nation of Camp Verde Indians
299. Yavapai-Prescott Indian Tribe
300. Ysleta Del Sur Pueblo of Texas
301. Yurok Tribe of Yurok Reservation

Philip N. Hogen,

Chairman, National Indian Gaming Commission.

[FR Doc. E9–14655 Filed 6–22–09; 8:45 am]

BILLING CODE 7565–02–P

DEPARTMENT OF THE INTERIOR

Fish and Wildlife Service

[FWS–R2–R–2008–N0257; 20131–1265–2CCP–S3]

Texas Mid-Coast Refuge Complex, Brazoria and Matagorda Counties, TX

AGENCY: Fish and Wildlife Service, Interior.

ACTION: Notice of intent to prepare a comprehensive conservation plan and environmental assessment; request for comments.

SUMMARY: We, the U.S. Fish and Wildlife Service (Service), intend to prepare a comprehensive conservation plan (CCP) and environmental assessment (EA) for the Texas Mid-Coast Refuge Complex (Complex). The Complex consists of the following refuges: Brazoria and San Bernard, located in Brazoria County, and Big Boggy in Matagorda County, Texas. Discontinuous refuge parcels and conservation easements, located primarily within the forested bottomlands of the Brazos River, San Bernard River, and Colorado River basins, in Brazoria, Wharton, and Fort Bend counties, are also part of the Complex. We provide this notice in compliance with our CCP policy to advise other Federal and State agencies, Tribes, and the public of our intentions, and to obtain suggestions and information on the scope of issues to consider in the planning process.

DATES: To ensure consideration, we must receive your written comments by September 21, 2009. We will hold open house meetings during the scoping phase of the Draft CCP development process. We will announce the dates, times, and places for all meetings in the local media.

ADDRESSES: Comments, questions, and requests for more information regarding the planning process should be sent to: Carol Torrez, Biologist/Natural Resource Planner, U.S. Fish and Wildlife Service, Division of Planning, P.O. Box 1306, Albuquerque, NM 87103–1306. Comments may also be submitted via electronic mail to: *carol_torrez@fws.gov.*

FOR FURTHER INFORMATION CONTACT: Jennifer Sanchez, Project Leader, *Telephone:* 979–964–4011; *Fax:* 979–964–4021, or Carol Torrez, Biologist/Natural Resource Planner, *Telephone:* 505–248–6821, *Fax:* 505–248–6874.

SUPPLEMENTARY INFORMATION:

Introduction

With this notice, we initiate our process for developing a CCP for the Texas Mid-Coast Refuge Complex, which includes the following refuges: Brazoria and San Bernard, located in Brazoria County, and Big Boggy in Matagorda County, Texas. Discontinuous refuge parcels and conservation easements, located primarily within the forested bottomlands of the Brazos, San Bernard, and Colorado Rivers basins, are also part of the Complex.

This notice complies with our CCP policy to (1) advise other Federal and State agencies, Tribes, and the public of our intention to conduct detailed planning on these Refuges, and (2) obtain suggestions and information on the scope of issues to consider in the environmental document and during development of the CCP.

Background

The CCP Process

The National Wildlife Refuge System Improvement Act of 1997 (16 U.S.C. 668dd–668ee) (Improvement Act), which amended the National Wildlife Refuge System Administration Act of 1966, requires us to develop a CCP for each National Wildlife Refuge. The purpose for developing a CCP is to provide Refuge Managers with a 15-year strategy for achieving refuge purposes and contributing toward the mission of the National Wildlife Refuge System, consistent with sound principles of fish and wildlife management, conservation, legal mandates, and our policies. In addition to outlining broad management direction on conserving wildlife and their habitats, CCPs identify wildlife-dependent recreational opportunities available to the public, including opportunities for hunting, fishing, wildlife observation, wildlife photography, and environmental education and interpretation. We will review and update the CCP at least every 15 years in accordance with the Improvement Act.

Each unit of the National Wildlife Refuge System was established for specific purposes. We use these purposes as the foundation for developing and prioritizing the management goals and objectives for each refuge within the National Wildlife Refuge System mission, and to determine how the public can use each refuge. The planning process is a way for us and the public to evaluate management goals and objectives for the best possible conservation approach to this important wildlife habitat, while providing for wildlife-dependent recreation opportunities that are compatible with each refuge's establishing purposes and the mission of the National Wildlife Refuge System.

Our CCP process provides participation opportunities for Tribal, State, and local governments; agencies; organizations; and the public. At this time we encourage input in the form of issues, concerns, ideas, and suggestions for the future management of the Complex. Special mailings, newspaper articles, and other media outlets will be used to announce opportunities for input throughout the planning process.

We will conduct the EA in accordance with the requirements of the National Environmental Policy Act of 1969, as amended (NEPA) (42 U.S.C. 4321 *et seq.*); NEPA regulations (40 CFR parts 1500–1508); other appropriate Federal laws and regulations; and our policies and procedures for compliance with those laws and regulations.

Texas Mid-Coast Refuge Complex

The Complex is located along the upper Texas Gulf Coast and consists of three refuges (Brazoria, San Bernard, and Big Boggy NWRs), and parcels and conservation easements located throughout the Columbia Bottomlands region. All three of the Refuges are comprised largely of coastal marsh with tidal interchange along the Gulf of Mexico and were originally established for use as an inviolate sanctuary, or for any other management purpose, for migratory birds. These coastal marsh communities grade inland into coastal prairie, which gives way to bottomland forests along the rivers and bayous. The CCP will provide other agencies and the public with a clear understanding of the desired conditions for the Complex, and how the Service will implement management strategies for the conservation and development of these natural resources.

We estimate that the draft environmental documents will be

available in 2010 for public review and comment.

Public Availability of Comments

Before including your address, phone number, e-mail address, or other personal identifying information in your comment, you should be aware that your entire comment, including your personal identifying information, may be made publicly available at any time. While you can ask us in your comment to withhold your personal identifying information from public review, we cannot guarantee that we will be able to do so.

Dated: May 1, 2009.

Brian Millsap,

Acting Regional Director, U.S. Fish and Wildlife Service, Albuquerque, New Mexico.

[FR Doc. E9–14566 Filed 6–22–09; 8:45 am]

BILLING CODE 4310–55–P

DEPARTMENT OF THE INTERIOR

Fish and Wildlife Service

[FWS–R1–ES–2009–N115; 10120–1113–0000–F5]

Endangered Wildlife and Plants; Permits

AGENCY: Fish and Wildlife Service, Interior.

ACTION: Notice of availability of application for permit; request for comments.

SUMMARY: We, the U.S. Fish and Wildlife Service (Service), invite the public to comment on the following application for a permit to conduct certain activities with endangered species under the Endangered Species Act of 1973, as amended (Act), which requires that we invite public comment on the permit application.

DATES: We must receive your written data or comments by July 23, 2009.

ADDRESSES: Program Manager, Endangered Species, Ecological Services, U.S. Fish and Wildlife Service, 911 NE., 11th Avenue, Portland, OR 97232–4181.

FOR FURTHER INFORMATION CONTACT: Grant Canterbury, Fish and Wildlife Biologist, at the above address or by telephone (503–231–2071) or fax (503–231–6243).

SUPPLEMENTARY INFORMATION: The following applicant has applied for a scientific research permit to conduct certain activities with endangered species under section 10(a)(1)(A) of the Act (16 U.S.C. 1531 *et seq.*). We solicit review and comment from local, State, and Federal agencies and the public.

Permit No.: TE188214.

Applicant: Richard Pender.

The applicant requests a scientific research permit to remove and reduce to possession *Clermontia lindseyana* ('oha wai) in conjunction with research in the State of Hawaii, for the purpose of enhancing its survival.

Public Comments

Please refer to the permit number for the application when submitting comments.

We solicit public review and comment on this recovery permit application. Before including your address, phone number, e-mail address, or other personal identifying information in your comment, you should be aware that your entire comment—including your personal identifying information—may be made publicly available at any time. While you can ask us in your comment to withhold your personal identifying information from public review, we cannot guarantee that we will be able to do so.

Comments and materials we receive will be available for public inspection, by appointment, during normal business hours at the above address.

Dated: June 9, 2009.

David J. Wesley,

Acting Regional Director, Region 1, U.S. Fish and Wildlife Service.

[FR Doc. E9–14668 Filed 6–22–09; 8:45 am]

BILLING CODE 4310–55–P

DEPARTMENT OF THE INTERIOR

Fish and Wildlife Service

[FWS–R8–R–2009–N0066; 80230–1265–0000–S3]

Sacramento, Delevan, Colusa, and Sutter National Wildlife Refuges, Glenn, Colusa, and Sutter Counties, CA

AGENCY: Fish and Wildlife Service, Interior.

ACTION: Notice of Availability: Final Comprehensive Conservation Plan and Finding of No Significant Impact.

SUMMARY: We, the U.S. Fish and Wildlife Service (Service), announce the availability of the Final Comprehensive Conservation Plan (CCP) and Finding of No Significant Impact (FONSI) for Sacramento, Delevan, Colusa, and Sutter National Wildlife Refuges (Refuges). The CCP, prepared pursuant to the National Wildlife Refuge System Improvement Act of 1997, and in accordance with the National Environmental Policy Act of 1969, describes how the Service will manage the Refuges for the next 15 years.

DATES: The CCP and FONSI are available now. The FONSI was signed On March 17, 2009. Implementation of the CCP may begin immediately.

ADDRESSES: You may view or obtain copies of the final CCP and FONSI/EA by any of the following methods. You may request a hard copy or CD–ROM.

Agency Web Site: Download a copy of the document(s) at *http://sacramentovalleyrefuges.fws.gov*.

E-mail: Jackie_Ferrier@fws.gov.

Mail: U.S. Fish and Wildlife Service, Attn: Jackie Ferrier, Sacramento National Wildlife Refuge Complex, 752 County Road 99W, Willows, CA 95988.

In-Person Viewing or Pickup: Call 530–934–2801 to make an appointment during regular business hours at Sacramento National Wildlife Refuge Complex, 752 County Road 99W, Willows, CA 95988.

Local Library or Libraries: The document(s) are also available for review at the libraries listed under **SUPPLEMENTARY INFORMATION.**

FOR FURTHER INFORMATION CONTACT: Kevin Foerster, Project Leader at Sacramento National Wildlife Refuge Complex or Jackie Ferrier, Refuge Planner at Sacramento National Wildlife Refuge Complex 752 County Road 99W, Willows, CA 95988 or at (530) 934–2801 (telephone), or *Jackie_Ferrier@fws.gov* (e-mail).

SUPPLEMENTARY INFORMATION:

Background

Sacramento, Delevan, Colusa, and Sutter National Wildlife Refuges are located in the Sacramento Valley of California, approximately 90 miles north of the city of Sacramento. The Refuges manage and protect wintering habitat for migratory birds and endangered and threatened species. The Refuges contain approximately 24,000 acres of critically important habitats for a great diversity of wildlife, particularly migratory birds. Over 40 percent of the Pacific Flyway waterfowl winters in the Sacramento Valley. The vast majority of wetlands in the Sacramento Valley have been converted to agricultural, industrial, and urban development. Remaining wetlands are intensively managed to optimize wildlife benefits.

The Draft CCP and Environmental Assessment (EA) were available for a 54-day public review and comment period, which was announced via several methods, including press releases; updates to constituents; and in the **Federal Register** (73 FR 42363, July 21, 2008). The Draft CCP/EA identified and evaluated four alternatives for managing

the Refuges for the next 15 years. Alternative A was the no-action alternative, which described current Refuge management activities. Alternative B placed greater emphasis on biological resources than on visitor services. Alternative C (the selected alternative) provided an optimal balance of improved biological resource objectives and expanded visitor services opportunities. Alternative D placed greater emphasis on visitor services than on biological resources.

The Service received 75 comment letters on the Draft CCP and EA during the review period. The comments received were incorporated into the CCP when possible, and we responded to the comments in an appendix to the CCP. In the FONSI, Alternative C was selected for implementation and is the basis for the CCP. The FONSI documents the decision of the Service and is based on the information and analysis contained in the EA.

Under the selected alternative, the Refuges would achieve an optimal balance of biological resource objectives and visitor services opportunities. Habitat management and associated biological resource monitoring would be improved. Visitor service opportunities would focus on quality wildlife-dependant recreation distributed throughout the Refuges. In addition, environmental education, interpretation, wildlife observation, photography, and hunting programs would be improved and/or expanded.

The selected alternative best meets the Refuges' purposes, vision and goals; contributes to the Refuge System mission; addresses the significant issues and relevant mandates; and is consistent with principles of sound fish and wildlife management.

Public Availability of Documents

In addition to the methods in **ADDRESSES**, you can view or obtain documents at the following locations:

- *Our Web site: http://sacramentovalleyrefuges.fws.gov.*
- *Public Libraries:* during regular library hours, at the following libraries:

Library	Address	Phone number
Bayliss Library	7830 County Road 39, Glenn, CA 95943	530–934–2287
Butte County Library	1108 Sherman Avenue, Chico, CA 95926	530–891–2762
Butte County Public Library	1820 Mitchell Avenue, Oroville, CA 5966	530–538–7641
Colusa County Library	738 Market Street, Colusa, CA 95932	530–458–7671
Colusa County Library	232 Prince Street, Princeton, CA 95970	530–439–2235
Corning Library	740 3rd Street, Corning, CA 96021	530–824–7050
Orland City Library	333 Mill Street, Orland, CA 95963	530–865–1640
Sutter County Library	750 Forbes Avenue, Yuba City, CA 95991	530–822–7137
Willows Public Library	201 North Lassen Street, Willows, CA 95988	530–934–5156

Dated: June 17, 2009.

Margaret T. Kolar,

Acting Regional Director, Pacific Southwest Region, Sacramento, California.

[FR Doc. E9–14662 Filed 6–22–09; 8:45 am]

BILLING CODE 4310–55–P

INTERNATIONAL TRADE COMMISSION

[Investigation No. 337–TA–663]

In the Matter of Certain Mobile Telephones and Wireless Communication Devices Featuring Digital Cameras, and Components Thereof; Notice of Commission Decision Not To Review an Initial Determination Amending the Complaint and Notice of Investigation

AGENCY: U.S. International Trade Commission.

ACTION: Notice.

SUMMARY: Notice is hereby given that the U.S. International Trade Commission has determined not to review an initial determination (''ID'') (Order No. 14) issued by the presiding administrative law judge (''ALJ'') in the above-captioned investigation granting leave to complainant Eastman Kodak Co. (''Kodak'') to amend its complaint and the notice of investigation to assert an additional patent claim in the investigation.

FOR FURTHER INFORMATION CONTACT: Paul M. Bartkowski, Office of the General Counsel, U.S. International Trade Commission, 500 E Street, SW., Washington, DC 20436, telephone (202) 708–5432. Copies of non-confidential documents filed in connection with this investigation are or will be available for inspection during official business hours (8:45 a.m. to 5:15 p.m.) in the Office of the Secretary, U.S. International Trade Commission, 500 E Street, SW., Washington, DC 20436, telephone (202) 205–2000. General information concerning the Commission may also be obtained by accessing its Internet server at *http://www.usitc.gov.* The public record for this investigation may be viewed on the Commission's electronic docket (EDIS) at *http://edis.usitc.gov.* Hearing-impaired persons are advised that information on this matter can be obtained by contacting the Commission's TDD terminal on (202) 205–1810.

SUPPLEMENTARY INFORMATION: This investigation was instituted on December 18, 2008, based on a complaint filed by complainant Kodak of Rochester, New York. The complaint alleged violations of section 337 of the Tariff Act of 1930 (19 U.S.C. 1337) in the importation into the United States, the sale for importation, and the sale within the United States after importation of certain mobile telephones and wireless communication devices that infringe certain claims of U.S. Patent Nos. 5,493,335 (''the '335 patent'') and 6,292,218. The complaint named Samsung Electronics Co., Ltd.; Samsung Electronics America, Inc.; Samsung Telecommunications America, LLC; LG Electronics, Inc.; LG Electronics USA; and LG Electronics MobileComm USA, Inc.

On May 26, 2009, the ALJ issued the subject ID, granting Kodak's motion for leave to amend the complaint and the notice of investigation to assert claim 12 of the '335 patent. No petitions for review were filed.

The Commission has determined not to review the subject ID.

The authority for the Commission's determination is contained in section 337 of the Tariff Act of 1930, as amended (19 U.S.C. 1337), and in sections 210.42 of the Commission's Rules of Practice and Procedure (19 CFR 210.42).

By order of the Commission.

Issued: June 17, 2009.

Marilyn R. Abbott,

Secretary to the Commission.

[FR Doc. E9–14665 Filed 6–22–09; 8:45 am]

BILLING CODE 7020–02–P

INTERNATIONAL TRADE COMMISSION

[Inv. No. 337–TA–679]

In the Matter of Certain Products Advertised as Containing Creatine Ethyl Ester; Notice of Investigation

AGENCY: U.S. International Trade Commission.

ACTION: Institution of investigation pursuant to 19 U.S.C. 1337.

SUMMARY: Notice is hereby given that a complaint was filed with the U.S. International Trade Commission on May 20, 2009, under section 337 of the Tariff Act of 1930, as amended, 19 U.S.C. 1337, on behalf of UNeMed Corporation of Omaha, Nebraska. Supplements to the Complaint were filed on June 5, 2009, June 8, 2009 and June 10, 2009. The complaint, as supplemented, alleges violations of section 337(a)(1)(A) based upon the importation into the United States, the sale for importation, and the sale within the United States after importation of certain products advertised as containing creatine ethyl ester by reason of false advertising in violation of Section 43(a) of the Lanham Act, 15 U.S.C. 1125(a)(1)(B) and the Nebraska Uniform Deceptive Trade Practices Act, R.R.S. Neb. § 87–302 (2008), the threat or effect of which is to destroy or substantially injure an industry in the United States.

The complainant requests that the Commission institute an investigation and, after the investigation, issue an exclusion order and cease and desist orders.

ADDRESSES: The complaint, except for any confidential information contained therein, is available for inspection during official business hours (8:45 a.m. to 5:15 p.m.) in the Office of the Secretary, U.S. International Trade Commission, 500 E Street, SW., Room 112, Washington, DC 20436, telephone 202–205–2000. Hearing impaired individuals are advised that information on this matter can be obtained by contacting the Commission's TDD terminal on 202–205–1810. Persons with mobility impairments who will need special assistance in gaining access to the Commission should contact the Office of the Secretary at 202–205–2000. General information concerning the Commission may also be obtained by accessing its Internet server at *http://www.usitc.gov.* The public record for this investigation may be viewed on the Commission's electronic docket (EDIS) at *http://edis.usitc.gov.*

FOR FURTHER INFORMATION CONTACT: Jeffrey T. Hsu, Esq., Office of Unfair Import Investigations, U.S. International Trade Commission, telephone (202) 205–2579.

Authority: The authority for institution of this investigation is contained in section 337 of the Tariff Act of 1930, as amended, and in section 210.10 of the Commission's Rules of Practice and Procedure, 19 CFR 210.10 (2009).

Scope of Investigation: Having considered the complaint, the U.S. International Trade Commission, on June 15, 2009, *ordered that*—

(1) Pursuant to subsection (b) of section 337 of the Tariff Act of 1930, as amended, an investigation be instituted to determine whether there is a violation of subsection (a)(1)(A) of section 337 in the importation into the United States, the sale for importation, or the sale within the United States after importation of certain products advertised as containing creatine ethyl ester by reason of false advertising, the threat or effect of which is to destroy or substantially injure an industry in the United States;

(2) For the purpose of the investigation so instituted, the following are hereby named as parties upon which this notice of investigation shall be served:

(a) The complainant is—UNeMed Corporation, 986099 Nebraska Medical Center, Omaha, NE 68198–6099.

(b) The respondents are the following entities alleged to be in violation of section 337, and are the parties upon which the complaint is to be served:

Bodyonics, Ltd., 140 Lauman Lane, Hicksville, NY 11801.
Engineered Sports Technology, Inc., 4250 Alafaya Trail, Oviedo, FL 32765.
Proviant Technologies, Inc., 309 West Hensley Road, Champaign, IL 61822–8401.
NRG–X Labs, 10636 West Highway 72 #1001, Bentonville, AR 72712.
San Corporation, 716 North Ventura Road #431, Oxnard, CA 93030.

(c) The Commission investigative attorney, party to this investigation, is Jeffrey T. Hsu, Esq., Office of Unfair Import Investigations, U.S. International Trade Commission, 500 E Street, SW., Suite 401, Washington, DC 20436; and

(3) For the investigation so instituted, Paul J. Luckern, Chief Administrative Law Judge, U.S. International Trade Commission, shall designate the presiding Administrative Law Judge.

Responses to the complaint and the notice of investigation must be submitted by the named respondents in accordance with section 210.13 of the Commission's Rules of Practice and Procedure, 19 CFR 210.13. Pursuant to 19 CFR 201.16(d) and 210.13(a), such responses will be considered by the Commission if received not later than 20 days after the date of service by the Commission of the complaint and the notice of investigation. Extensions of time for submitting responses to the complaint and the notice of investigation will not be granted unless good cause therefor is shown.

Failure of a respondent to file a timely response to each allegation in the complaint and in this notice may be deemed to constitute a waiver of the right to appear and contest the allegations of the complaint and this notice, and to authorize the administrative law judge and the Commission, without further notice to the respondent, to find the facts to be as alleged in the complaint and this notice and to enter an initial determination and a final determination containing such findings, and may result in the issuance of an exclusion order or a cease and desist order or both directed against a respondent.

By order of the Commission.

Issued: June 17, 2009.

Marilyn R. Abbott,

Secretary to the Commission.

[FR Doc. E9–14670 Filed 6–22–09; 8:45 am]

BILLING CODE 7020–02–P

DEPARTMENT OF JUSTICE

Drug Enforcement Administration

Manufacturer of Controlled Substances; Notice of Application

Pursuant to § 1301.33(a) of Title 21 of the Code of Federal Regulations (CFR), this is notice that on May 8, 2009, Chattem Chemicals Inc., 3801 St. Elmo Avenue, Building 18, Chattanooga, Tennessee 37409, made application by letter to the Drug Enforcement Administration (DEA) as a bulk manufacturer of the basic class of controlled substances listed in schedule II:

Drug	Schedule
Methadone (9250)	II
Methadone intermediate (9254)	II

The company plans to manufacture the listed controlled substances in bulk for distribution to its customers.

Any other such applicant, and any person who is presently registered with DEA to manufacture such substances, may file comments or objections to the issuance of the proposed registration pursuant to 21 CFR 1301.33(a).

Any such written comments or objections should be addressed, in

quintuplicate, to the Drug Enforcement Administration, Office of Diversion Control, Federal Register Representative (ODL), 8701 Morrissette Drive, Springfield, Virginia 22152; and must be filed no later than August 24, 2009.

Dated: June 15, 2009.

Joseph T. Rannazzisi,

Deputy Assistant Administrator, Office of Diversion Control, Drug Enforcement Administration.

[FR Doc. E9–14708 Filed 6–22–09; 8:45 am]

BILLING CODE 4410–09–P

DEPARTMENT OF JUSTICE

Drug Enforcement Administration

Manufacturer of Controlled Substances; Notice of Application

Pursuant to § 1301.33(a) of Title 21 of the Code of Federal Regulations (CFR), this is notice that on May 13, 2009, Austin Pharma LLC., 811 Paloma Drive, Suite A, Round Rock, Texas 78665–2402, made application by renewal to the Drug Enforcement Administration (DEA) to be registered as a bulk manufacturer of the basic classes of controlled substances listed in schedules I and II:

Drug	Schedule
Marihuana (7360)	I
Tetrahydrocannabinols (7370)	I
Alphamethadol (9605)	I
Nabilone (7379)	II
Methadone (9250)	II
Methadone Intermediate (9254)	II
Levo-alphacetylmethadol (9648)	II
Alfentanil (9737)	II
Remifentanil (9739)	II
Sufentanil (9740)	II
Fentanyl (9801)	II

The company plans to manufacture the listed controlled substances in bulk for distribution to its customers.

In reference to drug code 7360 (Marihuana), the company plans to bulk manufacture cannabidiol as a synthetic intermediate. This controlled substance will be further synthesized to bulk manufacture a synthetic THC (7370). No other activity for this drug code is authorized for this registration.

Any other such applicant, and any person who is presently, registered with DEA to manufacture such substances may file comments or objections to the issuance of the proposed registration pursuant to 21 CFR 1301.33(a).

Any such written comments or objections should be addressed, in quintuplicate, to the Drug Enforcement Administration, Office of Diversion Control, Federal Register Representative (ODL), 8701 Morrissette Drive, Springfield, Virginia 22152; and must be filed no later than August 24, 2009.

Dated: June 15, 2009.

Joseph T. Rannazzisi,

Deputy Assistant Administrator/Deputy Chief of Operation, Office of Diversion Control, Drug Enforcement Administration.

[FR Doc. E9–14697 Filed 6–22–09; 8:45 am]

BILLING CODE 4410–09–P

DEPARTMENT OF JUSTICE

Antitrust Division

Notice Pursuant to the National Cooperative Research and Production Act of 1993—Cooperative Research Group on Clean Diesel V

Correction

In notice document E9–10358 appearing on page 21403 in the issue of May 7, 2009, make the following correction:

On page 21403, in the first column, in the second line from the bottom, ''Auburn Hills, NI'' should read ''Auburn Hills, MI''.

[FR Doc. Z9–10358 Filed 6–22–09; 8:45 am]

BILLING CODE 1505–01–D

DEPARTMENT OF JUSTICE

Drug Enforcement Administration

Importer of Controlled Substances; Notice of Application

Pursuant to 21 U.S.C. 958(i), the Attorney General shall, prior to issuing a registration under this section to a bulk manufacturer of a controlled substance in schedule I or II, and prior to issuing a regulation under 21 U.S.C. 952(a)(2) authorizing the importation of such a substance, provide manufacturers holding registrations for the bulk manufacture of the substance an opportunity for a hearing.

Therefore, in accordance with Title 21 Code of Federal Regulations 1301.34(a), this is notice that on May 18, 2009, Aptuit, 10245 Hickman Mills Drive, Kansas City, Missouri 64137, made application by renewal to the Drug Enforcement Administration (DEA) to be registered as an importer of Marihuana (7360), a basic class of controlled substance listed in schedule I.

The company plans to import a finished pharmaceutical product containing cannabis extracts in dosage form for packaging for a clinical trial study.

Any bulk manufacturer who is presently, or is applying to be, registered with DEA to manufacture such basic class of controlled substance may file comments or objections to the issuance of the proposed registration and may, at the same time, file a written request for a hearing on such application pursuant to 21 CFR 1301.43 and in such form as prescribed by 21 CFR 1316.47.

Any such comments or objections should be addressed, in quintuplicate, to the Drug Enforcement Administration, Office of Diversion Control, Federal Register Representative (ODL), 8701 Morrissette Drive, Springfield, Virginia 22152; and must be filed no later than July 23, 2009.

This procedure is to be conducted simultaneously with, and independent of, the procedures described in 21 CFR 1301.34(b), (c), (d), (e), and (f). As noted in a previous notice published in the **Federal Register** on September 23, 1975, (40 FR 43745–46), all applicants for registration to import the basic class of any controlled substance in schedule I or II are, and will continue to be, required to demonstrate to the Deputy Assistant Administrator, Office of Diversion Control, Drug Enforcement Administration, that the requirements for such registration pursuant to 21 U.S.C. 958(a); 21 U.S.C. 823(a); and 21 CFR 1301.34(b), (c), (d), (e), and (f) are satisfied.

Dated: June 15, 2009.

Joseph T. Rannazzisi,

Deputy Assistant Administrator, Office of Diversion Control, Drug Enforcement Administration.

[FR Doc. E9–14693 Filed 6–22–09; 8:45 am]

BILLING CODE 4410–09–P

DEPARTMENT OF JUSTICE

Drug Enforcement Administration

Importer of Controlled Substances; Notice of Application

Pursuant to 21 U.S.C. 958(i), the Attorney General shall, prior to issuing a registration under this section to a bulk manufacturer of a controlled substance in schedule I or II, and prior to issuing a regulation under 21 U.S.C. 952(a)(2) authorizing the importation of such a substance, provide manufacturers holding registrations for the bulk manufacture of the substance an opportunity for a hearing.

Therefore, in accordance with Title 21 Code of Federal Regulations 1301.34(a), this is notice that on May 28, 2009, Boehringer Ingelheim Chemicals, Inc., 2820 N. Normandy Drive, Petersburg, Virginia 23805, made application by renewal to the Drug Enforcement

Administration (DEA) to be registered as an importer of Phenylacetone (8501), a basic class of controlled substance listed in schedule II.

The company plans to import the listed controlled substance to bulk manufacture amphetamine.

Any bulk manufacturer who is presently, or is applying to be, registered with DEA to manufacture such basic class of controlled substance may file comments or objections to the issuance of the proposed registration and may, at the same time, file a written request for a hearing on such application pursuant to 21 CFR 1301.43 and in such form as prescribed by 21 CFR 1316.47.

Any such comments or objections should be addressed, in quintuplicate, to the Drug Enforcement Administration, Office of Diversion Control, Federal Register Representative (ODL), 8701 Morrissette Drive, Springfield, Virginia 22152; and must be filed no later than July 23, 2009.

This procedure is to be conducted simultaneously with, and independent of, the procedures described in 21 CFR 1301.34(b), (c), (d), (e), and (f). As noted in a previous notice published in the **Federal Register** on September 23, 1975, (40 FR 43745–46), all applicants for registration to import the basic class of any controlled substance in schedule I or II are, and will continue to be, required to demonstrate to the Deputy Assistant Administrator, Office of Diversion Control, Drug Enforcement Administration, that the requirements for such registration pursuant to 21 U.S.C. 958(a); 21 U.S.C. 823(a); and 21 CFR 1301.34(b), (c), (d), (e), and (f) are satisfied.

Dated: June 15, 2009.

Joseph T. Rannazzisi,

Deputy Assistant Administrator, Office of Diversion Control, Drug Enforcement Administration.

[FR Doc. E9–14729 Filed 6–22–09; 8:45 am]

BILLING CODE 4410–09–P

DEPARTMENT OF JUSTICE

Drug Enforcement Administration

Importer of Controlled Substances; Notice of Application

Pursuant to 21 U.S.C. 958(i), the Attorney General shall, prior to issuing a registration under this Section to a bulk manufacturer of a controlled substance in schedule I or II and prior to issuing a regulation under 21 U.S.C. 952(a)(2) authorizing the importation of such substances, provide manufacturers holding registrations for the bulk manufacture of the substance an opportunity for a hearing.

Therefore, in accordance with 21 CFR 1301.34(a), this is notice that on May 28, 2009, Aptuit (Allendale) Inc., 75 Commerce Drive, Allendale, New Jersey 07401, made application by renewal to the Drug Enforcement Administration (DEA) for registration as an importer of the basic classes of controlled substances listed in schedule II.

Drug	Schedule
Lisdexamfetamine (1205)	II
Noroxymorphone (9668)	II

The company plans to import the basic classes of controlled substances for clinical trials and research.

Any bulk manufacturer who is presently, or is applying to be, registered with DEA to manufacture such basic classes of controlled substances may file comments or objections to the issuance of the proposed registration and may, at the same time, file a written request for a hearing on such application pursuant to 21 CFR 1301.43 and in such form as prescribed by 21 CFR 1316.47.

Any such comments or objections should be addressed, in quintuplicate, to the Drug Enforcement Administration, Office of Diversion Control, Federal Register Representative (ODL), 8701 Morrissette Drive, Springfield, Virginia 22152; and must be filed no later than July 23, 2009.

This procedure is to be conducted simultaneously with and independent of, the procedures described in 21 CFR 1301.34(b),(c),(d),(e) and (f). As noted in a previous notice published in the **Federal Register** on September 23, 1975, (40 FR 43745–46), all applicants for registration to import the basic classes of any controlled substances in schedule I or II are, and will continue to be, required to demonstrate to the Deputy Assistant Administrator, Office of Diversion Control, Drug Enforcement Administration, that the requirements for such registration pursuant to 21 U.S.C. 958(a); 21 U.S.C. 823(a); and 21 CFR 1301.34(b), (c), (d), (e), and (f) are satisfied.

Dated: June 15, 2009.

Joseph T. Rannazzisi,

Deputy Assistant Administrator, Office of Diversion Control, Drug Enforcement Administration.

[FR Doc. E9–14724 Filed 6–22–09; 8:45 am]

BILLING CODE 4410–09–P

DEPARTMENT OF JUSTICE

Drug Enforcement Administration

Manufacturer of Controlled Substances; Notice of Application

Pursuant to § 1301.33(a) of Title 21 of the Code of Federal Regulations (CFR), this is notice that on May 27, 2009, Boehringer Ingelheim Chemicals, Inc., 2820 N. Normandy Drive, Petersburg, Virginia 23805, made application by renewal to the Drug Enforcement Administration (DEA) as a bulk manufacturer of the basic classes of controlled substances listed in schedule II:

Drug	Schedule
Amphetamine (1100)	II
Lisdexamfetamine (1205)	II
Methylphenidate (1724)	II
Methadone (9250)	II
Methadone intermediate (9254)	II

The company plans to manufacture the listed controlled substances in bulk for sale to its customers for formulation into finished pharmaceuticals.

Any other such applicant, and any person who is presently registered with DEA to manufacture such substances, may file comments or objections to the issuance of the proposed registration pursuant to 21 CFR 1301.33(a).

Any such written comments or objections should be addressed, in quintuplicate, to the Drug Enforcement Administration, Office of Diversion Control, Federal Register Representative (ODL), 8701 Morrissette Drive, Springfield, Virginia 22152; and must be filed no later than August 24, 2009.

Dated: June 15, 2009.

Joseph T. Rannazzisi,

Deputy Assistant Administrator, Office of Diversion Control, Drug Enforcement Administration.

[FR Doc. E9–14707 Filed 6–22–09; 8:45 am]

BILLING CODE 4410–09–P

DEPARTMENT OF JUSTICE

Drug Enforcement Administration

Manufacturer of Controlled Substances; Notice of Application

Pursuant to Section 1301.33(a) of Title 21 of the Code of Federal Regulations (CFR), this is notice that on May 22, 2009, Noramco Inc., Division of Ortho-McNeil, Inc., 1440 Olympic Drive, Athens, GA 30601, made application by letter to the Drug Enforcement Administration (DEA) for registration as a bulk manufacturer of Tapentadol

(9780), a basic class of controlled substance listed in schedule II.

The company plans to bulk manufacture the above listed controlled substance for distribution to its customers.

Any other such applicant and any person who is presently registered with DEA to manufacture such a substance may file comments or objections to the issuance of the proposed registration pursuant to 21 CFR 1301.33(a).

Any such written comments or objections should be addressed, in quintuplicate, to the Drug Enforcement Administration, Office of Diversion Control, Federal Register Representative (ODL), 8701 Morrissette Drive, Springfield, VA 22152; and must be filed no later than August 24, 2009.

Joseph T. Rannazzisi,

Deputy Assistant Administrator, Office of Diversion Control, Drug Enforcement Administration.

[FR Doc. E9–14705 Filed 6–22–09; 8:45 am]

BILLING CODE 4410–09–P

DEPARTMENT OF JUSTICE

DRUG ENFORCEMENT ADMINISTRATION

Manufacturer of Controlled Substances; Notice of Application

Pursuant to Section 1301.33(a) of Title 21 of the Code of Federal Regulations (CFR), this is notice that on May 1, 2009, Noramco Inc., Division of Ortho-McNeil, Inc., 1440 Olympic Drive, Athens, Georgia 30601, made application by letter to the Drug Enforcement Administration (DEA) for registration as a bulk manufacturer of Noroxymorphone (9668), a basic class of controlled substance listed in schedule II.

The company plans to bulk manufacture the above listed controlled substance for distribution to its customers.

Any other such applicant and any person who is presently registered with DEA to manufacture such a substance may file comments or objections to the issuance of the proposed registration pursuant to 21 CFR 1301.33(a).

Any such written comments or objections should be addressed, in quintuplicate, to the Drug Enforcement Administration, Office of Diversion Control, Federal Register Representative (ODL), 8701 Morrissette Drive, Springfield, VA 22152; and must be filed no later than August 24, 2009.

Dated: June 15, 2009.

Joseph T. Rannazzisi,

Deputy Assistant Administrator, Office of Diversion Control, Drug Enforcement Administration.

[FR Doc. E9–14704 Filed 6–22–09; 8:45 am]

BILLING CODE 4410–09–P

DEPARTMENT OF JUSTICE

Drug Enforcement Administration

Manufacturer of Controlled Substances; Notice of Application

Pursuant to Section 1301.33(a) of Title 21 of the Code of Federal Regulations (CFR), this is notice that on May 22, 2009, Noramco Inc., Division of Ortho-McNeil, Inc., 500 Swedes Landing Road, Wilmington, Delaware 19801, made application by letter to the Drug Enforcement Administration (DEA) for registration as a bulk manufacturer of Tapentadol (9780), a basic class of controlled substance listed in schedule II.

The company plans to bulk manufacture the above listed controlled substance for distribution to its customers.

Any other such applicant, and any person who is presently registered with DEA to manufacture such a substance, may file comments or objections to the issuance of the proposed registration pursuant to 21 CFR 1301.33(a).

Any such written comments or objections should be addressed, in quintuplicate, to the Drug Enforcement Administration, Office of Diversion Control, Federal Register Representative (ODL), 8701 Morrissette Drive, Springfield, VA 22152; and must be filed no later than August 24, 2009.

Dated: June 15, 2009.

Joseph T. Rannazzisi,

Deputy Assistant Administrator, Office of Diversion Control, Drug Enforcement Administration.

[FR Doc. E9–14695 Filed 6–22–09; 8:45 am]

BILLING CODE 4410–09–P

DEPARTMENT OF LABOR

Office of the Secretary; ''Promotion of Labor Rights and Employment in Pakistan''

June 17, 2009.

AGENCY: Bureau of International Labor Affairs, Department of Labor.

Announcement Type: New. Notice of Availability of Funds and Solicitation for Cooperative Agreement Applications. The full announcement is posted on http://*www.Grants.gov.*

Funding Opportunity Number: SGA–09–07.

Key Dates: The closing date for receipt of applications is July 31, 2009 via Grants.gov. Applications may also be submitted by mail.

Funding Opportunity Description

The U.S. Department of Labor (USDOL), Bureau of International Labor Affairs (ILAB), announces the availability of funds in the amount of U.S. $1,600,000 to be awarded by Cooperative Agreement to a qualifying organization for the purpose of implementing a worker rights and employment demonstration project that assists unemployed Pakistanis with vocational and entrepreneurial training to obtain employment or pursue professions and acquire an understanding of their fundamental rights as workers. The project will take place in the Federally Administered Tribal Areas, the Northwest Frontier Province and Baluchistan. Participants provided with vocational training will also receive integrated worker rights training in order to ensure that they are able to fully benefit from their new skills and professions. Similarly, new entrepreneurs may become employers for the first time and will also receive worker rights training to understand their responsibilities as employers. ILAB is authorized to award and administer this program by the Department of Labor Appropriations Act, 2009, Public Law 111–08, 123 Stat. 524 (2009). The Cooperative Agreement awarded under this initiative will be managed by ILAB's Office of Trade and Labor Affairs. The duration of the project funded by this solicitation is three years. The start date of program activities will be negotiated upon award of the Cooperative Agreement, but will be no later than September 30, 2009.

The full Solicitation for Grant Applications is posted on *http://www.Grants.gov* under U.S. Department of Labor/ILAB. If you need to speak to a person concerning these grants, or if you have issues regarding access to the *Grants.gov* Web site, you may telephone Georgiette Nkpa at 202–693–4584 (not a toll-free number).

Signed at Washington, DC this 17th day of June 2009.

Cassandra Mitchell,

Grant Officer.

[FR Doc. E9–14648 Filed 6–22–09; 8:45 am]

BILLING CODE 4510–28–P

DEPARTMENT OF LABOR

Employment Standards Administration

Proposed Extension of the Approval of Information Collection Requirements

ACTION: Notice.

SUMMARY: The Department of Labor, as part of its continuing effort to reduce paperwork and respondent burden, conducts a preclearance consultation program to provide the general public and Federal agencies with an opportunity to comment on proposed and/or continuing collections of information in accordance with the Paperwork Reduction Act of 1995 (PRA95) [44 U.S.C. 3506(c)(2)(A)]. This program helps to ensure that requested data can be provided in the desired format, reporting burden (time and financial resources) is minimized, collection instruments are clearly understood, and the impact of collection requirements on respondents can be properly assessed. Currently, the Employment Standards Administration is soliciting comments concerning its proposal to extend the Office of Management and Budget (OMB) approval of the Information Collection: Uniform Billing Form (OWCP–04). A copy of the proposed information collection request can be obtained by contacting the office listed below in the **ADDRESSES** section of this Notice.

DATES: Written comments must be submitted to the office listed in the addresses section below on or before August 24, 2009.

ADDRESSES: Mr. Steven D. Lawrence, U.S. Department of Labor, 200 Constitution Ave., NW., Room S–3201, Washington, DC 20210, telephone (202) 693–0292, fax (202) 693–1451, E-mail *Lawrence.Steven@dol.gov.* Please use only one method of transmission for comments (mail, fax, or E-mail).

SUPPLEMENTARY INFORMATION:

I. Background: The Office of Workers' Compensation Programs (OWCP) is the agency responsible for administration of the Federal Employees' Compensation Act (FECA), 5 U.S.C. 8101 *et seq.,* the Black Lung Benefits Act (BLBA), 30 U.S.C. 901 *et seq.,* and the Energy Employees Occupational Illness Compensation Program Act of 2000 (EEOICPA), 42 U.S.C. 7384 *et seq.* All three of these statutes require that OWCP pay for medical treatment of beneficiaries; this medical treatment can include inpatient/outpatient hospital services, as well as services provided by nursing homes and skilled nursing facilities. In order to determine whether billed amounts are appropriate, OWCP needs to identify the patient, the specific services that were rendered and their relationship to the work-related injury or illness. The regulations implementing these statutes require the use of Form OWCP–04 (which includes the first page of the private sector Form UB–04) for the submission of medical bills from institutional providers (20 CFR 10.801, 30.701, 725.405, 725.406, 725.701 and 725.704).

The Uniform Billing Form, known as the paper UB–04, has been approved by the American Hospital Association, the Centers for Medicare and Medicaid Services, the Civilian Health and Medical Program of the Uniformed Services (CHAMPUS), by various other government health care programs, and by the private sector, to request payment to institutional providers of medical services. The paper UB–04 has been designed by the National Uniform Billing Committee and is neither a government-printed form nor distributed by OWCP; OWCP has, however, developed detailed instructions to ensure that it obtains the information it needs to consider requests for payment from institutional providers using this form. This information collection is currently approved for use through January 31, 2010.

II. Review Focus: The Department of Labor is particularly interested in comments that:

- Evaluate whether the proposed collection of information is necessary for the proper performance of the functions of the agency, including whether the information will have practical utility;
- Evaluate the accuracy of the agency's estimate of the burden of the proposed collection of information, including the validity of the methodology and assumptions used;
- Enhance the quality, utility, and clarity of the information to be collected; and
- Minimize the burden of the collection of information on those who are to respond, including through the use of appropriate automated, electronic, mechanical, or other technological collection techniques or other forms of information technology, e.g., permitting electronic submissions of responses.

III. Current Actions: The Department of Labor seeks approval for the extension of this information collection in order to carry out its responsibility to provide payment covered medical services to injured employees who are covered under the FECA, BLBA and the EEOICPA.

Type of Review: Extension.

Agency: Employment Standards Administration.

Title: Uniform Billing Form (OWCP–04).

OMB Number: 1215–0176.

Affected Public: Individuals or households; Business or other for-profit; Not-for-profit institutions.

Total Respondents: 5,481.

Total Annual responses: 21,924.

Estimated Total Burden Hours: 2,558.

Estimated Time Per Response: 7 minutes.

Frequency: Annually.

Total Burden Cost (capital/startup): $0.

Total Burden Cost (operating/maintenance): $0.

Comments submitted in response to this notice will be summarized and/or included in the request for Office of Management and Budget approval of the information collection request; they will also become a matter of public record.

Dated: June 18, 2009.

Steven D. Lawrence,

Acting Chief, Branch of Management Review and Internal Control, Division of Financial Management, Office of Management, Administration and Planning, Employment Standards Administration.

[FR Doc. E9–14688 Filed 6–22–09; 8:45 am]

BILLING CODE 4510–CH–P

DEPARTMENT OF LABOR

Employment Standards Administration

Proposed Extension of the Approval of Information Collection Requirements

ACTION: Notice.

SUMMARY: The Department of Labor, as part of its continuing effort to reduce paperwork and respondent burden, conducts a preclearance consultation program to provide the general public and Federal agencies with an opportunity to comment on proposed and/or continuing collections of information in accordance with the Paperwork Reduction Act of 1995 (PRA95) [44 U.S.C. 3506(c)(2)(A)]. This program helps to ensure that requested data can be provided in the desired format, reporting burden (time and financial resources) is minimized, collection instruments are clearly understood, and the impact of collection requirements on respondents can be properly assessed. Currently, the Employment Standards Administration is soliciting comments concerning its proposal to extend the Office of Management and Budget (OMB) approval of the Information Collection: Provider Enrollment Form (OWCP–

1168). A copy of the proposed information collection request can be obtained by contacting the office listed below in the **ADDRESSES** section of this Notice.

DATES: Written comments must be submitted to the office listed in the **ADDRESSES** section below on or before August 24, 2009.

ADDRESSES: Mr. Steven D. Lawrence, U.S. Department of Labor, 200 Constitution Ave., NW., Room S–3201, Washington, DC 20210, telephone (202) 693–0292, fax (202) 693–1451, e-mail *Lawrence.Steven@dol.gov.* Please use only one method of transmission for comments (mail, fax, or e-mail).

SUPPLEMENTARY INFORMATION:

I. Background

The Office of Workers' Compensation Programs (OWCP) is the agency responsible for administration of the Federal Employees' Compensation Act (FECA), 5 U.S.C. 8101 *et seq.,* the Black Lung Benefits Act (BLBA), 30 U.S.C. 901 *et seq.,* and the Energy Employees Occupational Illness Compensation Program Act of 2000 (EEOICPA), 42 U.S.C. 7384 *et seq.* These statutes require OWCP to pay for appropriate medical and vocational rehabilitation services provided to beneficiaries. In order for OWCP's billing contractor to pay providers of these services with its automated bill processing system, providers must ''enroll'' with one or more of the OWCP programs that administer the statutes by submitting certain profile information, including identifying information, tax I.D. information, and whether they possess specialty or sub-specialty training. Form OWCP–1168 is used to obtain this information from each provider.

If this information is not obtained before the provider submits his or her first bill for payment, the bill payment process is substantially prolonged and increases the burden on providers. This information collection is currently approved for use through January 31, 2010.

II. Review Focus

The Department of Labor is particularly interested in comments which:

* Evaluate whether the proposed collection of information is necessary for the proper performance of the functions of the agency, including whether the information will have practical utility;

* Evaluate the accuracy of the agency's estimate of the burden of the proposed collection of information, including the validity of the methodology and assumptions used;

* Enhance the quality, utility and clarity of the information to be collected; and

* Minimize the burden of the collection of information on those who are to respond, including through the use of appropriate automated, electronic, mechanical, or other technological collection techniques or other forms of information technology, *e.g.,* permitting electronic submissions of responses.

III. Current Actions

The Department of Labor seeks the approval of the extension of this information collection in order to carry out a wide range of automated bill ''edits'', such as the identification of duplicate billings, the application of pertinent fee schedules, utilization review, and fraud and abuse detection. The profile information is also used to furnish detailed reports to providers on the status of previously submitted bills.

Type of Review: Extension.

Agency: Employment Standards Administration.

Title: Provider Enrollment Form (OWCP–1168).

OMB Number: 1215–0137.

Agency Numbers: OWCP–1168.

Affected Public: Business or other for-profit.

Total Respondents: 70,185.

Total Annual Responses: 70,185.

Estimated Total Burden Hours: 9,335.

Estimated Time per Response: 8 minutes.

Frequency: On occasion.

Total Burden Cost (Capital/Startup): $0.

Total Burden Cost (Operating/Maintenance): $32,987.

Comments submitted in response to this notice will be summarized and/or included in the request for Office of Management and Budget approval of the information collection request; they will also become a matter of public record.

Dated: June 18, 2009.

Steven D. Lawrence,

Acting Chief, Branch of Management Review and Internal Control, Division of Financial Management, Office of Management, Administration and Planning, Employment Standards Administration.

[FR Doc. E9–14666 Filed 6–22–09; 8:45 am]

BILLING CODE 4510–CH–P

DEPARTMENT OF LABOR

Office of Workers' Compensation Programs

Energy Employees Occupational Illness Compensation Program Act of 2000, as amended

AGENCY: Office of Workers' Compensation Programs, Employment Standards Administration, Labor.

ACTION: Notice of revision of listing of covered Department of Energy facilities.

SUMMARY: The Office of Workers' Compensation Programs (OWCP) is publishing a list of Department of Energy (DOE) facilities covered under the Energy Employees Occupational Illness Compensation Program Act of 2000, as amended (EEOICPA). This notice revises the listing of DOE facilities that was included as part of the list of covered facilities last published by DOE on August 23, 2004 (69 FR 51825) to include the determinations made by OWCP on this subject through June 23, 2009.

FOR FURTHER INFORMATION CONTACT: Shelby Hallmark, Director, Office of Workers' Compensation Programs, Employment Standards Administration, U.S. Department of Labor, Room S–3524, 200 Constitution Avenue, NW., Washington, DC 20210. Telephone: 202–693–0031 (this is not a toll-free number).

ADDRESSES: OWCP welcomes comments regarding this list. Individuals who wish to suggest changes to this list may provide information to OWCP at the following address: Division of Energy Employees Occupational Illness Compensation, Office of Workers' Compensation Programs, Employment Standards Administration, U.S. Department of Labor, Room C–3321, 200 Constitution Avenue, NW., Washington, DC 20210. You may also suggest changes to this list by e-mail at *DEEOIC-Public@dol.gov.* You should include ''DOE facilities list'' in the subject line of any e-mail containing comments on this list.

SUPPLEMENTARY INFORMATION:

I. Background

The Energy Employees Occupational Illness Compensation Program Act of 2000, as amended (42 U.S.C. 7384 *et seq.*), was originally enacted on October 30, 2000. Primary responsibility for administration of EEOICPA was assigned to the Department of Labor (DOL) by Executive Order 13179 (''Providing Compensation to America's Nuclear Weapons Workers'') of December 7, 2000 (65 FR 77487). In

section 2(c)(vii) of that Order, DOE was directed to ''publish in the **Federal Register** a list of atomic weapons employer facilities within the meaning of section [7384l(5)] of the Act, Department of Energy employer facilities within the meaning of section [7384l(12)] of the Act, and a list of facilities owned and operated by a beryllium vendor, within the meaning of section [7384l(6)] of the Act.'' Pursuant to this direction, DOE initially published a list of all three types of facilities covered under EEOICPA on January 17, 2001 (66 FR 4003), and subsequently revised and republished the entire list on June 11, 2001 (66 FR 31218), December 27, 2002 (67 FR 79068), July 21, 2003 (68 FR 43095), and August 23, 2004 (69 FR 51825). In notices published on November 30, 2005 (70 FR 71815), June 28, 2007 (72 FR 35448) and April 9, 2009 (74 FR 16191), DOE further revised the list by formally removing a total of ten atomic weapons employer facilities from it without republishing the list in its entirety.

Following the amendments to EEOICPA that were enacted as subtitle E of Title XXXI of the Ronald W. Reagan National Defense Authorization Act for Fiscal Year 2005, Public Law 108–375, 118 Stat. 1811, 2178 (October 28, 2004), DOL promulgated interim final and final regulations governing its expanded responsibilities under EEOICPA on June 8, 2005 (70 FR 33590) and December 29, 2006 (71 FR 78520). One of these regulations, 20 CFR 30.5(x)(2), indicates that DOL has adopted the list of DOE facilities that was published by DOE on August 23, 2004, and notes that ''DOL will periodically update this list as it deems appropriate in its sole discretion by publishing a revised list of covered [DOE] facilities in the **Federal Register**.'' In making these updates, 30.5(x)(1) specifies that the Director of OWCP is responsible for determining whether or not a particular work site under consideration meets the definition of a *Department of Energy facility.* This sole responsibility is derived from the grant of primary authority to DOL to administer the EEOICPA claims process contained in section 2(a)(i) of Executive Order 13179.

II. Purpose

Since DOE last published a list of all three types of facilities covered under EEOICPA in the **Federal Register** on August 23, 2004, the Director of OWCP has made a number of determinations regarding the status of work sites in connection with claims filed under EEOICPA. Those determinations are described in this **SUPPLEMENTARY INFORMATION** and are memorialized in the lists that follow. Six new sites have been added to the lists of DOE facilities published today: Two in New Mexico, two in Tennessee, one in Utah and one in Massachusetts. The two added in New Mexico are the Kirtland Operations Office at Kirtland Air Force Base (AFB) in Albuquerque, and Hangar 481 at Kirtland AFB. The two added in Tennessee are the former Clinton Engineer Works in Oak Ridge and the Office of Scientific and Technical Information also in Oak Ridge, the one added in Utah is the Uranium Mill in Moab, and the one added in Massachusetts is the former Hood Building in Cambridge.

OWCP's research has also led it to rename or otherwise modify the designation of a few work sites that were previously included by DOE in its **Federal Register** lists. The Huntington Pilot Plant in Huntington, West Virginia now appears in these lists as the Reduction Pilot Plant; however, only the name of this facility has changed. Second, the Energy Technology Engineering Center (ETEC), a facility with multiple locations in both Los Angeles and Ventura Counties, California has been divided into separate contiguous facilities and appears in the lists published today as the following four facilities—Area IV of the Santa Susana Field Laboratory in Ventura County; and the Canoga Complex, the De Soto Complex and the Downey Facility in Los Angeles County. Third, OWCP has determined that four of the five buildings (Buildings 30, 31, 37 and 38, but not 14) known collectively as the Linde Ceramics Plant in Tonawanda, New York, which were previously designated by DOE as an Atomic Weapons Employer (AWE) facility, actually constitute their own separate DOE facility. Fourth, OWCP has determined that Atomics International in Los Angeles County, California will no longer be considered to be a DOE facility; this action has no effect on the site's status as a statutory Beryllium Vendor facility. And finally, OWCP has determined that the previous DOE facility known as Gilman Hall, University of California in Berkeley, California, will no longer be considered a DOE facility because the University of California is the managing and operating contractor for the Lawrence Berkeley National Laboratory rather than a work site.

By incorporating these changes into the two lists found below, OWCP is presenting the public with the most current listing of DOE facilities in order to assist potential claimants and their families. OWCP is continuing its research efforts in this area, and further revisions of these lists should be expected. While DOE maintains a Web site (*http://www.hss.energy.gov/healthsafety/fwsp/advocacy/faclist/findfacility.cfm*) that provides information on AWE facilities, Beryllium Vendor facilities and DOE facilities to the public, the information on that Web site regarding DOE facilities should not be relied upon as it may not be up to date, nor is it binding on OWCP in its adjudication of any claims filed under EEOICPA. Instead, OWCP is solely authorized to give the public notice of determinations regarding DOE facilities.

III. Introduction to the Lists

The five complete lists previously published by DOE included all three types of work sites described in Executive Order 13179, *i.e.,* AWE facilities, Beryllium Vendor facilities, and DOE facilities. The lists published today by OWCP, however, only include work sites that meet the statutory definition of a *Department of Energy facility* found at section 7384l(12) of EEOICPA, because the authority to designate AWE facilities and Beryllium Vendor facilities has been granted to DOE, not DOL, pursuant to section 7384l(4)(B) of EEOICPA and section 2(c)(iv) of Executive Order 13179. However, since some work sites can meet the definition of more than one type of covered work site during either consecutive or concurrent time periods, simply presenting one list of DOE facilities (without also differentiating among them in some easily understood fashion) could lead the reader to wrongly conclude that a work site has always been a DOE facility when, in fact, it only had that status during a brief period. To lessen the potential for this type of misunderstanding, OWCP has decided to present two separate lists of DOE facilities.

The first list consists exclusively of work sites that have only been DOE facilities for purposes of coverage under EEOICPA, and the second list consists of work sites that have also been at least one other type of covered work site in addition to a DOE facility. To see what other types of covered work sites the DOE facilities appearing in the second list are or have been, readers can refer to the **Federal Register** notices published by DOE on August 23, 2004 (69 FR 51825), November 30, 2005 (70 FR 71815), June 28, 2007 (72 FR 35448) and April 9, 2009 (74 FR 16191). Because coverage under EEOICPA for DOE facilities is limited to periods during which ''operations'' were performed by or on behalf of DOE (or its

predecessor agencies), *and* when DOE either had a proprietary interest in the site or had entered into a particular type of contract with an entity at the site, the lists below include date ranges during which covered employment at each site could have been performed. These date ranges, however, are not considered binding on OWCP in its adjudication of individual claims under EEOICPA and are presented in this notice for the sole purpose of informing the public of the current results of OWCP's research into the operational histories of these work sites, some of which extend back to the establishment of the Manhattan Engineer District of the U.S. Army Corps of Engineers on August 13, 1942. OWCP's research efforts in this area are continuing, and it expects that the date ranges currently included in this notice will change with the publication of future notices. DOE facilities appearing on the lists that have undergone environmental remediation at the direction of or directly by DOE are identified by the following symbol—†—after the date range during with such environmental remediation occurred.

LIST 1: WORK SITES THAT ARE/WERE DOE FACILITIES EXCLUSIVELY

Facility name	Location	Dates
Alaska DOE Facilities		
Amchitka Nuclear Explosion Site	Amchitka Island	1965–1972; 1995–Present†.
Project Chariot Site	Cape Thompson	1962; 1993†.
California DOE Facilities		
Area IV of the Santa Susanna Field Laboratory	Ventura County	1955–1988; 1988–Present†.
Canoga Complex	Los Angeles County	1955–1960.
De Soto Complex	Los Angeles County	1959–1995; 1998†.
Downey Facility	Los Angeles County	1948–1955.
Laboratory for Energy-Related Health Research, University of California (Davis).	Davis	1958–1989; 1991–Present†.
Laboratory of Biomedical and Environmental Sciences, University of California (Los Angeles).	Los Angeles	1947–Present.
Laboratory of Radiobiology and Environmental Health, University of California (San Francisco).	San Francisco	1951–1999.
Lawrence Berkeley National Laboratory	Berkeley	1942–Present.
Lawrence Livermore National Laboratory	Livermore	1950–Present.
Sandia National Laboratories, Salton Sea Test Base	Imperial County	1946–1961.
Sandia National Laboratories-Livermore	Livermore	1956–Present.
Stanford Linear Accelerator Center, Stanford University	Palo Alto	1962–Present.
Colorado DOE Facilities		
Grand Junction Operations Office	Grand Junction	1943–Present.
Project Rio Blanco Nuclear Explosion Site	Rifle	1973–1976.
Project Rulison Nuclear Explosion Site	Grand Valley	1969–1971; 1972–1978†.
Rocky Flats Plant	Golden	1951–2006.
Florida DOE Facilities		
Pinellas Plant	Clearwater	1957–1997.
Hawaii DOE Facilities		
Kauai Test Facility, U.S. Navy Pacific Missile Range	Kauai	Mid 1970's–Present.
Idaho DOE Facilities		
Argonne National Laboratory-West	Scoville	1949–2005.
Idaho National Laboratory	Scoville	1949–Present.
Illinois DOE Facilities		
Argonne National Laboratory-East	Argonne	1946–Present.
Fermi National Accelerator Laboratory	Batavia	1972–Present.
Indiana DOE Facilities		
Dana Heavy Water Plant	Dana	1943–1957.
Iowa DOE Facilities		
Ames Laboratory, Iowa State University	Ames	1942–Present.
Iowa Ordnance Plant (Iowa Army Ammunition Plant)	Burlington	1947–1974.
Kentucky DOE Facilities		
Paducah Gaseous Diffusion Plant	Paducah	1951–7/28/98; 7/29/98–Present†.

LIST 1: WORK SITES THAT ARE/WERE DOE FACILITIES EXCLUSIVELY—Continued

Facility name	Location	Dates
Massachusetts DOE Facilities		
Winchester Engineering and Analytical Center	Winchester	1952–1961.
Minnesota DOE Facilities		
Elk River Reactor	Elk River	1962–1968.
Mississippi DOE Facilities		
Salmon Nuclear Explosion Site	Hattiesburg	1964–1972.
Missouri DOE Facilities		
Kansas City Plant	Kansas City	1949–Present.
Mallinckrodt Chemical Co., Destrehan Street Facility	St. Louis	1942–1962; 1995†.
Weldon Spring Plant	Weldon Spring	1955–1967; 1975–Present†.
Nebraska DOE Facilities		
Hallam Sodium Graphite Reactor	Hallam	1960–1971.
Nevada DOE Facilities		
Nevada Operations Office	North Las Vegas	1962–Present.
Nevada Test Site	Mercury	1951–Present.
Project Faultless Nuclear Explosion Site	Central Nevada Test Site	1967–1974.
Project Shoal Nuclear Explosion Site	Fallon	1962–1964.
Tonopah Test Range	Tonopah	1956–Present.
Yucca Mountain Site Characterization Project	Yucca Mountain	1987–Present.
New Jersey DOE Facilities		
Middlesex Sampling Plant	Middlesex	1943–1967; 1980–1982†.
New Brunswick Laboratory	New Brunswick	1948–1977.
Princeton Plasma Physics Laboratory, James Forrestal Campus of Princeton University.	Princeton	1951–Present.
New Mexico DOE Facilities		
Albuquerque Operations Office	Albuquerque	1942–Present.
Chupadera Mesa	White Sands Missile Range	1945.
Kirtland Operations Office, Kirtland AFB	Albuquerque	1982–1984; 1988–1998.
Los Alamos Medical Center	Los Alamos	1952–1963.
Los Alamos National Laboratory	Los Alamos	1942–Present.
Lovelace Respiratory Research Institute, Kirtland AFB	Albuquerque	1960–Present.
Project Gasbuggy Nuclear Explosion Site	Farmington	1967–1973; 1978; 1992–Present†.
Project Gnome Nuclear Explosion Site	Carlsbad	1960–1962.
Hangar 481, Kirtland AFB	Albuquerque	1989–1996.
Sandia National Laboratories	Albuquerque	1949–Present.
South Albuquerque Works	Albuquerque	1951–1967.
Trinity Nuclear Explosion Site, Alamogordo Bombing and Gunnery Range.	White Sands Missile Range	1945; 1952†; 1967†.
Waste Isolation Pilot Plant	Carlsbad	1999–Present.
New York DOE Facilities		
Brookhaven National Laboratory	Upton	1947–Present.
Electro Metallurgical Co.	Niagara Falls	1942–1953.
Environmental Measurements Laboratory	New York	1946–2003.
Lake Ontario Ordnance Works	Niagara County	1944–1997.
Linde Ceramics Plant (Buildings 30, 31, 37, 38 only)	Tonawanda	1942–1953; 1988–1992†; 1996†.
Peek Street Facility (Knolls Atomic Power Laboratory)	Schenectady	1947–1954.
Sacandaga Facility	Glenville	1947–1953.
SAM Laboratories, Columbia University	New York	1942–1947.
Separations Process Research Unit (Knolls Atomic Power Laboratory)	Schenectady	1950–1965.
University of Rochester Atomic Energy Project	Rochester	1943–1986.
Ohio DOE Facilities		
Extrusion Plant (Reactive Metals Inc.)	Ashtabula	1962–Present.
Feed Materials Production Center (FMPC)	Fernald	1951–Present.
Mound Plant	Miamisburg	1947–Present.

LIST 1: WORK SITES THAT ARE/WERE DOE FACILITIES EXCLUSIVELY—Continued

Facility name	Location	Dates
Piqua Organic Moderated Reactor	Piqua	1963–1966.
Portsmouth Gaseous Diffusion Plant	Piketon	1952–7/28/98; 7/29/98–Present†.
Pennsylvania DOE Facilities		
Shippingport Atomic Power Plant	Shippingport	1984–1995†.
Puerto Rico DOE Facilities		
BONUS Reactor Plant	Punta Higuera	1964–1968.
Puerto Rico Nuclear Center	Mayaguez	1957–1976; 1987†.
South Carolina DOE Facilities		
Savannah River Site	Aiken	1950–Present.
Tennessee DOE Facilities		
Clarksville Modification Center, Ft. Campbell	Clarksville	1949–1967.
Clinton Engineer Works (CEW)	Oak Ridge	1943–1949.
Oak Ridge Gaseous Diffusion Plant (K–25)	Oak Ridge	1943–1987; 1988–Present†.
Oak Ridge Hospital	Oak Ridge	1943–1959.
Oak Ridge Institute for Science Education	Oak Ridge	1946–Present.
Oak Ridge National Laboratory (X–10)	Oak Ridge	1943–Present.
Office of Scientific and Technical Information (OSTI)	Oak Ridge	1957–Present.
S–50 Oak Ridge Thermal Diffusion Plant	Oak Ridge	1944–1951.
Y–12 Plant	Oak Ridge	1942–Present.
Texas DOE Facilities		
Medina Modification Center	San Antonio	1958–1966.
Pantex Plant	Amarillo	1951–Present.
Virginia DOE Facilities		
Thomas Jefferson National Accelerator Facility	Newport News	1994–Present.
Washington DOE Facilities		
Hanford Engineer Works	Richland	1942–Present.
Pacific Northwest National Laboratory	Richland	1965–Present.
West Virginia DOE Facilities		
Reduction Pilot Plant	Huntington	1951–1963; 1978–1979.
Wisconsin DOE Facilities		
LaCrosse Boiling Water Reactor	LaCrosse	1967–1969.
Territorial DOE Facilities		
Pacific Proving Ground	Bikini and Enewetak Atolls (now Republic of the Marshall Islands), Johnston Island and Christmas Island.	1946–1962.

LIST 2: WORK SITES THAT ARE/WERE DOE FACILITIES (FOR THE YEARS IDENTIFIED IN THE LAST COLUMN ONLY) AND ALSO ANOTHER TYPE OF EEOICPA-COVERED FACILITY

Facility name	Location	Dates
Arizona DOE Facilities		
Ore Buying Station at Globe	Globe	1955–1957.
California DOE Facilities		
General Atomics (Torrey Pines Mesa and Sorrento West)	La Jolla	1996–1999†.
General Electric Vallecitos	Pleasanton	1981–1982; 1998–Present†.

LIST 2: WORK SITES THAT ARE/WERE DOE FACILITIES (FOR THE YEARS IDENTIFIED IN THE LAST COLUMN ONLY) AND ALSO ANOTHER TYPE OF EEOICPA-COVERED FACILITY—Continued

Facility name	Location	Dates
Colorado DOE Facilities		
Green Sludge Plant in Uravan	Uravan	1943–1945.
Uranium Mill in Durango	Durango	1948–1963; 1986–1991.
Connecticut DOE Facilities		
Connecticut Aircraft Nuclear Engine Laboratory (CANEL)	Middletown	1958–1965.
Seymour Specialty Wire	Seymour	1992–1993†.
Illinois DOE Facilities		
General Steel Industries (South Plant)	Granite City	1993†.
Metallurgical Laboratory, University of Chicago (Eckert Hall, Jones Laboratory, Kent Laboratory and Ryerson Hall).	Chicago	1982–1983; 1987†.
National Guard Armory (Washington Park Armory)	Chicago	1987†.
Massachusetts DOE Facilities		
Chapman Valve Manufacturing Co.	Indian Orchard	1995†.
Hood Building	Cambridge	1946–1963.
Ventron Corporation	Beverly	1986; 1996–1997†.
Michigan DOE Facilities		
Bridgeport Brass Co.	Adrian	1995†.
Missouri DOE Facilities		
Latty Avenue Properties	Hazelwood	1984–1986†.
New Jersey DOE Facilities		
Du Pont Deepwater Works	Deepwater	1996†.
Kellex Corp./Pierpont Assoc.	Jersey City	1979–1980†.
Middlesex Municipal Landfill	Middlesex	1984; 1986.
Rare Earths/W.R. Grace	Wayne	1985–1987.
New Mexico DOE Facilities		
Ore Buying Station at Grants	Grants	1956–1958.
Ore Buying Station at Shiprock	Shiprock	1952–1954.
New York DOE Facilities		
Baker and Williams Warehouses (Pier 38)	New York	1991–1993†.
Colonie Interim Storage Site (National Lead Co.)	Colonie (Albany)	1984–1998.
West Valley Demonstration Project	West Valley	1980–Present.
Ohio DOE Facilities		
Alba Craft	Oxford	1994–1995†.
Associated Aircraft Tool and Manufacturing Co	Fairfield	1994–1995†.
Baker Brothers	Toledo	1995†.
Battelle Laboratories-King Avenue	Columbus	1986–2000.
Battelle Laboratories-West Jefferson	Columbus	1986–Present†.
Beryllium Production Plant (Brush Luckey Plant)	Luckey	1949–1961; 1992–Present†.
General Electric Co. (Ohio)	Cincinnati/Evendale	1961–1970.
Herring-Hall Marvin Safe Co.	Hamilton	1994–1995†.
Oregon DOE Facilities		
Albany Metallurgical Research Center, U.S. Bureau of Mines	Albany	1987–1993†; 1995–Present.
Pennsylvania DOE Facilities		
Aliquippa Forge	Aliquippa	1988; 1993–1994†.
C.H. Schnorr & Company	Springdale	1994.

LIST 2: WORK SITES THAT ARE/WERE DOE FACILITIES (FOR THE YEARS IDENTIFIED IN THE LAST COLUMN ONLY) AND ALSO ANOTHER TYPE OF EEOICPA-COVERED FACILITY—Continued

Facility name	Location	Dates
South Dakota DOE Facilities		
Ore Buying Station at Edgemont	Edgemont	1952–1956.
Utah DOE Facilities		
Ore Buying Station at Marysvale	Marysvale	1950–1957.
Ore Buying Station at Moab	Moab	1954–1960.
Ore Buying Station at Monticello	Monticello	1948–1962.
Ore Buying Station at White Canyon	White Canyon	1954–1957.
Uranium Mill in Moab	Moab	2001–Present.
Uranium Mill in Monticello	Monticello	1948–1960.
Wyoming DOE Facilities		
Ore Buying Station at Crooks Gap	Crooks Gap	1956–1957.
Ore Buying Station at Riverton	Riverton	1955–1957.

† Denotes a period of environmental remediation.

Signed at Washington, DC, this 17th day of June, 2009.

Shelby Hallmark,

Acting Assistant Secretary for Employment Standards.

[FR Doc. E9–14687 Filed 6–22–09; 8:45 am]

BILLING CODE 4510–CR–P

NATIONAL AERONAUTICS AND SPACE ADMINISTRATION

[Notice (09–056)]

Notice of Information Collection Under OMB Review

AGENCY: National Aeronautics and Space Administration (NASA).

ACTION: Notice of information collection under OMB review.

SUMMARY: The National Aeronautics and Space Administration, as part of its continuing effort to reduce paperwork and respondent burden, invites the general public and other Federal agencies to take this opportunity to comment on proposed and/or continuing information collections, as required by the Paperwork Reduction Act of 1995 (Pub. L. 104–13, 44 U.S.C. 3506(c)(2)(A)).

DATES: All comments should be submitted within 30 calendar days from the date of this publication.

ADDRESSES: All comments should be addressed to Jasmeet Seehra, Desk Officer for NASA; Office of Information and Regulatory Affairs; Room 10236; New Executive Office Building; Washington, DC 20503.

FOR FURTHER INFORMATION CONTACT: Requests for additional information or copies of the information collection instrument(s) and instructions should be directed to Dr. Walter Kit, NASA Clearance Officer, NASA Headquarters, 300 E Street SW., JF0000, Washington, DC 20546, (202) 358–1350, *Walter.Kit-1@nasa.gov.*

SUPPLEMENTARY INFORMATION:

I. Abstract

This collection is required by NASA FAR Supplement clause 1852.219–85 and supports recertification of eligibility of compliance with SBIR/STTR program requirements.

II. Method of Collection

The SBIR/STTR contractor may submit the required recertification electronically, unless the cognizant NASA Contracting Officer requirements the recertification to be submitted via hard copy. Approximately 50% of the responses are collected electronically.

III. Data

Title: SBIR/STTR Contractor Recertification.

OMB Number: 2700–0124.

Type of Review: Revision of currently approved collection.

Affected Public: Business or other for-profit.

Estimated Number of Respondents: 423.

Estimated Time Per Response: 0.50 hr.

Estimated Total Annual Burden Hours: 212.

Estimated Total Annual Cost: $0.

IV. Request for Comments

Comments are invited on: (1) Whether the proposed collection of information is necessary for the proper performance of the functions of NASA, including whether the information collected has practical utility; (2) the accuracy of NASA's estimate of the burden (including hours and cost) of the proposed collection of information; (3) ways to enhance the quality, utility, and clarity of the information to be collected; and (4) ways to minimize the burden of the collection of information on respondents, including automated collection techniques or the use of other forms of information technology.

Comments submitted in response to this notice will be summarized and included in the request for OMB approval of this information collection. They will also become a matter of public record.

Walter Kit,

NASA Clearance Officer.

[FR Doc. E9–14742 Filed 6–22–09; 8:45 am]

BILLING CODE 7510–13–P

NATIONAL AERONAUTICS AND SPACE ADMINISTRATION

[(09–057)]

Notice of Information Collection

AGENCY: National Aeronautics and Space Administration (NASA).

NOTICE: (09–057).

ACTION: Notice of information collection.

SUMMARY: The National Aeronautics and Space Administration, as part of its continuing effort to reduce paperwork and respondent burden, invites the general public and other Federal agencies to take this opportunity to comment on proposed and/or continuing information collections, as required by the Paperwork Reduction

Act of 1995 (Pub. L. 104–13, 44 U.S.C. 3506(c)(2)(A)).

DATES: All comments should be submitted within 30 calendar days from the date of this publication.

ADDRESSES: All comments should be addressed to Jasmeet Seehra, Office of Information and Regulatory Affairs; Office of Management and Budget; Room 10236; New Executive Office Building; Washington, DC, 20503.

FOR FURTHER INFORMATION CONTACT: Requests for additional information or copies of the information collection instrument(s) and instructions should be directed to Dr. Walter Kit, NASA Clearance Officer, NASA Headquarters, 300 E Street, SW., JF000, Washington, DC 20546, (202) 358–1350, *Walter.Kit–1@nasa.gov*.

SUPPLEMENTARY INFORMATION:

I. Abstract

The LIST (Locator and Information Services Tracking System) system form is used primarily to support services at GSFC dependent upon accurate locator type information. This locator system also serves as a tool for performing short and long-term institutional planning.

II. Method of Collection

Approximately 50% of the data is collected electronically by means of the data entry screen that duplicates the Goddard Space Flight Center form GSFC 24–27 in the LISTS system. The remaining data is keyed into the system from hardcopy version of form GSFC 24–27.

III. Data

Title: Locator and Information Services Tracking System (LISTS) Form.

OMB Number: 2700–0064.

Type of review: Extension of currently approved collection.

Affected Public: Federal government, individuals or households, and business or other for-profit.

Responses Per Respondent: 1.

Annual Responses: 8,455.

Hours Per Request: 0.08 hours/5 minutes.

Annual Burden Hours: 702.

IV. Request for Comments

Comments are invited on: (1) Whether the proposed collection of information is necessary for the proper performance of the functions of NASA, including whether the information collected has practical utility; (2) the accuracy of NASA's estimate of the burden (including hours and cost) of the proposed collection of information; (3) ways to enhance the quality, utility, and clarity of the information to be collected; and (4) ways to minimize the burden of the collection of information on respondents, including automated collection techniques or the use of other forms of information technology. Comments submitted in response to this notice will be summarized and included in the request for OMB approval of this information collection. They will also become a matter of public record.

Dr. Walter Kit,

NASA Clearance Officer.

[FR Doc. E9–14745 Filed 6–22–09; 8:45 am]

BILLING CODE 7510–13–P

NATIONAL AERONAUTICS AND SPACE ADMINISTRATION

[NOTICE (09–058)]

Notice of Information Collection Under OMB Review

AGENCY: National Aeronautics and Space Administration (NASA).

ACTION: Notice of information collection under OMB review

SUMMARY: The National Aeronautics and Space Administration, as part of its continuing effort to reduce paperwork and respondent burden, invites the general public and other Federal agencies to take this opportunity to comment on proposed and/or continuing information collections, as required by the Paperwork Reduction Act of 1995 (Pub.L. 104–13, 44 U.S.C. 3506(c)(2)(A)).

DATES: All comments should be submitted within 30 calendar days from the date of this publication.

ADDRESSES: All comments should be addressed to Jasmeet Seehra, Desk Officer for NASA; Office of Information and Regulatory Affairs; Room 10236; New Executive Office Building; Washington, DC 20503.

FOR FURTHER INFORMATION CONTACT: Requests for additional information or copies of the information collection instrument(s) and instructions should be directed to Dr. Walter Kit, NASA Clearance Officer, NASA Headquarters, 300 E Street SW., JF000, Washington, DC 20546, (202) 358–1350, *Walter.Kit-1@nasa.gov.*

SUPPLEMENTARY INFORMATION:

I. Abstract

The National Aeronautics and Space Administration (NASA) is requesting a three year extension for a collection that will be used to collect ideas, on a voluntary basis, from the general public about ways to fulfill NASA's technology development challenges.

II. Method of Collection

This set of Web-based forms will facilitate the voluntary collection of challenging ideas from the public.

III. Data

Title: Centennial Challenges Idea Submission Web Forms.

OMB Number: 2700–0119.

Type of Review: Extension of currently approved collection.

Affected Public: Individuals or households.

Estimated Number of Respondents: 300.

Estimated Time Per Response: 0.25 hours.

Estimated Total Annual Burden Hours: 75.

Estimated Total Annual Cost: $0.

IV. Request for Comments

Comments are invited on: (1) Whether the proposed collection of information is necessary for the proper performance of the functions of NASA, including whether the information collected has practical utility; (2) the accuracy of NASA's estimate of the burden (including hours and cost) of the proposed collection of information; (3) ways to enhance the quality, utility, and clarity of the information to be collected; and (4) ways to minimize the burden of the collection of information on respondents, including automated collection techniques or the use of other forms of information technology.

Comments submitted in response to this notice will be summarized and included in the request for OMB approval of this information collection. They will also become a matter of public record.

Dr. Walter Kit,

NASA Clearance Officer.

[FR Doc. E9–14748 Filed 6–22–09; 8:45 am]

BILLING CODE 7510–13–P

NATIONAL ARCHIVES AND RECORDS ADMINISTRATION

Information Security Oversight Office

Public Interest Declassification Board (PIDB); Meeting

AGENCY: National Archives and Records Administration.

ACTION: Notice of meeting.

SUMMARY: Pursuant to Section 1102 of the Intelligence Reform and Terrorism Prevention Act of 2004, which extended and modified the Public Interest Declassification Board (PIDB) as established by the Public Interest

Declassification Act of 2000 (Pub. L. 106–567, title VII, December 27, 2000, 114 Stat. 2856), announcement is made for the following committee meeting:

DATES: July 8, 2009.

Time: 9:30 a.m. to 12:30 p.m.

ADDRESSES: National Archives and Records Administration, 700 Pennsylvania Avenue, NW., Room 105, Washington, DC 20408.

FOR FURTHER INFORMATION CONTACT: Julie A. Agurkis, PIDB Staff, Information Security Oversight Office, National Archives Building, 700 Pennsylvania Avenue, NW., Washington, DC 20408, telephone number (202) 357–5308.

SUPPLEMENTARY INFORMATION: To solicit public input concerning recommendations and proposed revisions to the classification and declassification policies found in Executive Order 12958, as amended, ''Classified National Security Information'' (the Order). This action is being taken at the request of the National Security Advisor and in support of the ongoing review of the Order directed by the President on May 27, 2009.

This meeting will be open to the public. To ensure that the Board may hear from all interested parties, individuals interested in addressing the Board may be limited to 10 minutes. Due to space limitations and access procedures, the name and telephone number of individuals planning to attend must be submitted to the Information Security Oversight Office (ISOO) via e-mail, *PIDB@nara.gov,* no later than July 2, 2009. ISOO will provide additional instructions for gaining access to the location of the meeting.

Dated: June 11, 2009.

Mary Ann Hadyka,

Committee Management Officer.

[FR Doc. E9–14691 Filed 6–22–09; 8:45 am]

BILLING CODE 7515–01–P

NATIONAL SCIENCE FOUNDATION

National Science Board; Committee on Programs and Plans; Sunshine Act Meetings; Notice

The National Science Board's Committee on Strategy and Budget, pursuant to NSF regulations (45 CFR Part 614), the National Science Foundation Act, as amended (42 U.S.C. 1862n–5), and the Government in the Sunshine Act (5 U.S.C. 552b), hereby gives notice in regard to the scheduling of meetings for the transaction of National Science Board business and other matters specified, as follows:

DATE AND TIME: Friday, June 26, 2009 at 2 p.m.

SUBJECT MATTER: Discussion of future NSF budgets.

STATUS: Closed.

This meeting will be held by teleconference originating at the National Science Board Office, National Science Foundation, 4201 Wilson Blvd., Arlington, VA 22230. Please refer to the National Science Board Web site (*http://www.nsf.gov/nsb*) for information or schedule updates, or contact: Jennie Moehlmann, National Science Foundation, 4201 Wilson Blvd., Arlington, VA 22230. Telephone: (703) 292–7000.

Ann Ferrante,

Writer-Editor.

[FR Doc. E9–14914 Filed 6–19–09; 4:15 pm]

BILLING CODE 7555–01–P

NUCLEAR REGULATORY COMMISSION

[NRC–2009–0255; Docket No. 030–06652]

Notice of Availability of Environmental Assessment and Finding of No Significant Impact for License Amendment to Byproduct Materials License No. 47–00260–02, for Termination of the License and Unrestricted Release of Two Union Carbide Corporation Facilities Located in South Charleston, WV

AGENCY: Nuclear Regulatory Commission.

ACTION: Issuance of Environmental Assessment and Finding of No Significant Impact for License Amendment.

FOR FURTHER INFORMATION CONTACT: Steve Hammann, Health Physicist, Commercial and R&D Branch, Division of Nuclear Materials Safety, Region I, 475 Allendale Road, King of Prussia, Pennsylvania; telephone 610–337–5399; fax number 610–337–5269; or by e-mail: *stephen.hammann@nrc.gov.*

SUPPLEMENTARY INFORMATION:

I. Introduction

The U.S. Nuclear Regulatory Commission (NRC) is considering the issuance of a license amendment to Byproduct Materials License No. 47–00260–02. This license is held by Union Carbide Corporation (the Licensee) for its South Charleston Technology Park and South Charleston Plant located, respectively, at 3200 Kanawha Turnpike in South Charleston, West Virginia, and at 437 MacCorkle Avenue in South Charleston, West Virginia (the Facilities). Issuance of the amendment would authorize release of the Facilities for unrestricted use and termination of the NRC license. The Licensee requested this action in a letter dated March 7, 2008. The NRC has prepared an Environmental Assessment (EA) in support of this proposed action in accordance with the requirements of Title 10, *Code of Federal Regulations* (CFR), part 51 (10 CFR part 51). Based on the EA, the NRC has concluded that a Finding of No Significant Impact (FONSI) is appropriate with respect to the proposed action. The amendment will be issued to the Licensee following the publication of this FONSI and EA in the **Federal Register.**

II. Environmental Assessment

Identification of Proposed Action

The proposed action would approve the Licensee's March 7, 2008, license amendment request, resulting in release of the Facilities for unrestricted use and the termination of its NRC materials license. License No. 47–00260–02 was issued on August 15, 1956, pursuant to 10 CFR part 30, and has been amended periodically since that time. This license authorized the Licensee to use sealed and unsealed byproduct material for purposes of conducting research and development activities, sample analysis and instrument calibration.

The Facilities are situated on approximately 850 acres of land and consists of undeveloped land and numerous buildings used for a variety of purposes, including office space and laboratories, storage, and manufacturing. The Facilities are located in a mixed commercial and industrial area. Within the Facilities, use of licensed materials was confined to Buildings 701, 707, 712, 720, 722, 725, 727, 740, 741, 747, 770, 771, 773, 776, 777, 778, and 785.

In April, 2008, the Licensee ceased licensed activities and initiated a survey and decontamination of the Facilities. Based on the Licensee's historical knowledge of the sites and the condition of the Facilities, the Licensee determined that only routine decontamination activities, in accordance with their NRC-approved, operating radiation safety procedures, were required. The Licensee was not required to submit a decommissioning plan to the NRC because worker cleanup activities and procedures are consistent with those approved for routine operations. The Licensee conducted surveys of the Facilities and provided information to the NRC to demonstrate that it meets the criteria in subpart E of

10 CFR part 20 for unrestricted release and for license termination.

Need for the Proposed Action

The Licensee has ceased conducting licensed activities at the Facilities, and seeks the unrestricted use of its Facilities and the termination of its NRC materials license. Termination of its license would end the Licensee's obligation to pay annual license fees to the NRC.

Environmental Impacts of the Proposed Action

The historical review of licensed activities conducted at the Facilities show that such activities involved use of the following radionuclides with half-lives greater than 120 days: hydrogen-3, carbon-14, iron-55, cobalt-60, nickel-63, strontium-90, cadmium-109, cesium-137, and polonium-210. Prior to performing the final status survey, the Licensee conducted decontamination activities, as necessary, in the areas of the Facilities affected by these radionuclides.

The Licensee finished conducting a final status survey on November 17, 2008. This survey covered all buildings which used unsealed materials. The final status survey report was attached to the Licensee's amendment request dated March 7, 2008. The Licensee elected to demonstrate compliance with the radiological criteria for unrestricted release as specified in 10 CFR 20.1402 by using the screening approach described in NUREG–1757, ''Consolidated NMSS Decommissioning Guidance,'' Volume 2. The Licensee used the radionuclide-specific derived concentration guideline levels (DCGLs), developed there by the NRC, which comply with the dose criteria in 10 CFR 20.1402. These DCGLs define the maximum amount of residual radioactivity on building surfaces, equipment, and materials, and in soils that will satisfy the NRC requirements in subpart E of 10 CFR part 20 for unrestricted release. The Licensee's final status survey results were below these DCGLs and are in compliance with the As Low As Reasonably Achievable (ALARA) requirement of 10 CFR 20.1402. The NRC thus finds that the Licensee's final status survey results are acceptable.

Based on its review, the staff has determined that the affected environment and any environmental impacts associated with the proposed action are bounded by the impacts evaluated by the ''Generic Environmental Impact Statement in Support of Rulemaking on Radiological Criteria for License Termination of NRC-Licensed Nuclear Facilities'' (NUREG–1496) Volumes 1–3 (ML042310492, ML042320379, and ML042330385). The staff finds there were no significant environmental impacts from the use of radioactive material at the Facilities. The NRC staff reviewed the docket file records and the final status survey report to identify any non-radiological hazards that may have impacted the environment surrounding the Facilities. No such hazards or impacts to the environment were identified. The NRC has identified no other radiological or non-radiological activities in the area that could result in cumulative environmental impacts.

The NRC staff finds that the proposed release of the Facilities for unrestricted use and the termination of the NRC materials license is in compliance with 10 CFR 20. Based on its review, the staff considered the impact of the residual radioactivity at the Facilities and concluded that the proposed action will not have a significant effect on the quality of the human environment.

Environmental Impacts of the Alternatives to the Proposed Action

Due to the largely administrative nature of the proposed action, its environmental impacts are small. Therefore, the only alternative the staff considered is the no-action alternative, under which the staff would leave things as they are by simply denying the amendment request. This no-action alternative is not feasible because it conflicts with 10 CFR 30.36(d), requiring that decommissioning of byproduct material facilities be completed and approved by the NRC after licensed activities cease. The NRC's analysis of the Licensee's final status survey data confirmed that the Facilities meets the requirements of 10 CFR 20.1402 for unrestricted release and for license termination. Additionally, denying the amendment request would result in no change in current environmental impacts. The environmental impacts of the proposed action and the no-action alternative are therefore similar, and the no-action alternative is accordingly not further considered.

Conclusion

The NRC staff has concluded that the proposed action is consistent with the NRC's unrestricted release criteria specified in 10 CFR 20.1402. Because the proposed action will not significantly impact the quality of the human environment, the NRC staff concludes that the proposed action is the preferred alternative.

Agencies and Persons Consulted

NRC provided a draft of this Environmental Assessment to the State of West Virginia Office of Environmental Health Services for review on April 9, 2009. On June 4, 2009, the State responded by telephone. The State agreed with the conclusions of the EA, and otherwise had no comments.

The NRC staff has determined that the proposed action is of a procedural nature, and will not affect listed species or critical habitat. Therefore, no further consultation is required under Section 7 of the Endangered Species Act. The NRC staff has also determined that the proposed action is not the type of activity that has the potential to cause effects on historic properties. Therefore, no further consultation is required under Section 106 of the National Historic Preservation Act.

III. Finding of No Significant Impact

The NRC staff has prepared this EA in support of the proposed action. On the basis of this EA, the NRC finds that there are no significant environmental impacts from the proposed action, and that preparation of an environmental impact statement is not warranted. Accordingly, the NRC has determined that a Finding of No Significant Impact is appropriate.

IV. Further Information

Documents related to this action, including the application for license amendment and supporting documentation, are available electronically at the NRC's Electronic Reading Room at *http://www.nrc.gov/reading-rm/adams.html.* From this site, you can access the NRC's Agencywide Documents Access and Management System (ADAMS), which provides text and image files of NRC's public documents. The documents related to this action are listed below, along with their ADAMS accession numbers.

1. NUREG–1757, ''Consolidated NMSS Decommissioning Guidance'';
2. Title 10 *Code of Federal Regulations,* Part 20, Subpart E, ''Radiological Criteria for License Termination'';
3. Title 10, *Code of Federal Regulations,* Part 51, ''Environmental Protection Regulations for Domestic Licensing and Related Regulatory Functions'';
4. NUREG–1496, ''Generic Environmental Impact Statement in Support of Rulemaking on Radiological Criteria for License Termination of NRC-Licensed Nuclear Facilities'';
5. Termination Request Letter dated March 7, 2008 (ML083520561);

6. Request For Additional Information dated April 30, 2008 (ML081260393); and

7. Deficiency Response Letter dated December 11, 2008 (ML083520561).

If you do not have access to ADAMS, or if there are problems in accessing the documents located in ADAMS, contact the NRC Public Document Room (PDR) Reference staff at 1–800–397–4209, 301–415–4737, or by e-mail to *pdr@nrc.gov.* These documents may also be viewed electronically on the public computers located at the NRC's PDR, O 1 F21, One White Flint North, 11555 Rockville Pike, Rockville, MD 20852. The PDR reproduction contractor will copy documents for a fee.

Dated at Region I, 475 Allendale Road, King of Prussia, Pennsylvania this 15th day of June 2009.

For the Nuclear Regulatory Commission.

James P. Dwyer,

Chief, Commercial and R&D Branch, Division of Nuclear Materials Safety, Region I.

[FR Doc. E9–14684 Filed 6–22–09; 8:45 am]

BILLING CODE 7590–01–P

NUCLEAR REGULATORY COMMISSION

[Docket No. 50–302; NRC–2009–0256]

Crystal River Unit 3; Notice of Consideration of Issuance of Amendment to Facility Operating License, Proposed No Significant Hazards Consideration Determination, and Opportunity for a Hearing

The U.S. Nuclear Regulatory Commission (the Commission) is considering issuance of an amendment to Facility Operating License No. DPR–72 issued to Florida Power Corporation, *et al* (the licensee) for operation of the Crystal River Unit No. 3 Nuclear Generating Plant, located in Citrus County, Florida.

The proposed amendment would revise the Crystal River Unit 3 (CR–3) Final Safety Analysis Report (FSAR) Sections 5.4.3, ''Structural Design Criteria'' and 5.4.5.3, ''Missile Analysis,'' to include a statement regarding the design of the east wall of the CR–3 Auxiliary Building. The amendment would change the methodology used to qualify the east wall of the Auxiliary Building. The current methodology used the methods in American Concrete Institute (ACI) standard 318–63, ''Building Code Requirements for Reinforced Concrete,'' June 1963. The proposed methodology is based on ACI 349–97, ''Code Requirements for Nuclear Safety Related Concrete Structures,'' as endorsed by the Standard Review Plan (NUREG 0800), Revision 2—March 2007, Section 3.8.4 ''Other Seismic Category 1 Structures.''

Before issuance of the proposed license amendment, the Commission will have made findings required by the Atomic Energy Act of 1954, as amended (the Act), and the Commission's regulations.

The Commission has made a proposed determination that the amendment request involves no significant hazards consideration. Under the Commission's regulations in Title 10 of the Code of Federal Regulations (10 CFR), Section 50.92, this means that operation of the facility in accordance with the proposed amendment would not (1) involve a significant increase in the probability or consequences of an accident previously evaluated; or (2) create the possibility of a new or different kind of accident from any accident previously evaluated; or (3) involve a significant reduction in a margin of safety. As required by 10 CFR 50.91(a), the licensee has provided its analysis of the issue of no significant hazards consideration, which is presented below:

1. Does not involve a significant increase in the probability or consequences of an accident previously evaluated.

The proposed LAR will revise the methodology used to qualify the east wall of the CR–3 Auxiliary Building for all expected and postulated loads including tornado wind and missile loading. The Yield Line Theory methodology is an industry standard that is used for the design and analysis of concrete slabs and is applied to CR–3 in accordance with American Concrete Institute (ACI) 349–97, ''Code Requirements for Nuclear Safety Related Concrete Structures.'' A change in the methodology of an analysis used to verify qualification of an existing structure will not have any impact on the probability of accidents previously evaluated.

The analysis performed demonstrates that the CR–3 Auxiliary Building east wall will remain structurally intact following the worst case loadings assumed in the calculation. Therefore, this proposed change does not involve a significant increase in the probability or consequences previously evaluated.

2. Does not create the possibility of a new or different kind of accident from any accident previously evaluated.

The function of the CR–3 Auxiliary Building wall is to house and protect the equipment that is important to safety from damage during normal operation, transients, and design basis accidents. The use of ACI 349–97 for qualifying the east wall of the CR–3 Auxiliary Building has no impact on the capability of the structure. A calculation that uses the Yield Line Theory methodology demonstrated that the structure meets required design criteria. This ensures that the wall is capable of performing its design basis function without alteration or compensatory actions of any kind. No changes to any plant system, structure, or component (SSC) are proposed. No changes to any plant operating practices, procedures, computer firmware/software will occur.

Therefore, the proposed change will not create the possibility of new or different type of accident from any previously evaluated.

3. Does not involve a significant reduction in a margin on safety.

The design basis of the plant requires structures to be capable of withstanding normal and accident loads including those from a design basis tornado. The requirements of ACI 349–97, as applied in an approved plant calculation, demonstrated that the east wall of the CR–3 Auxiliary Building is capable of performing its design function. There is a slight reduction in conservatism between the method used for the remaining Class 1 structures, ACI 318–63 and ACI 349–97, but the calculation performed validates the requirement that the east wall of the Auxiliary Building will protect the important to safety systems, structures, and components located in proximity to the wall from damage.

Therefore, the proposed change does not involve a significant reduction in the margin of safety.

The NRC staff has reviewed the licensee's analysis and, based on this review, it appears that the three standards of 10 CFR 50.92(c) are satisfied. Therefore, the NRC staff proposes to determine that the amendment request involves no significant hazards consideration.

The Commission is seeking public comments on this proposed determination. Any comments received within 30 days after the date of publication of this notice will be considered in making any final determination.

Normally, the Commission will not issue the amendment until the expiration of 60 days after the date of publication of this notice. The Commission may issue the license amendment before expiration of the 60-day period provided that its final determination is that the amendment involves no significant hazards consideration. In addition, the Commission may issue the amendment prior to the expiration of the 30-day comment period should circumstances change during the 30-day comment period such that failure to act in a timely way would result, for example, in derating or shutdown of the facility. Should the Commission take action prior to the expiration of either the comment period or the notice period, it will publish in the **Federal Register** a notice of issuance. Should the Commission make a final No Significant Hazards Consideration Determination, any hearing will take place after

issuance. The Commission expects that the need to take this action will occur very infrequently.

Written comments may be submitted by mail to the Chief, Rulemaking and Directives Branch, TWB–05–B01M, Division of Administrative Services, Office of Administration, U.S. Nuclear Regulatory Commission, Washington, DC 20555–0001, and should cite the publication date and page number of this **Federal Register** notice. Documents may be examined, and/or copied for a fee, at the NRC's Public Document Room (PDR), located at One White Flint North, Public File Area O1 F21, 11555 Rockville Pike (first floor), Rockville, Maryland.

Within 60 days after the date of publication of this notice, any person(s) whose interest may be affected by this action may file a request for a hearing and a petition to intervene with respect to issuance of the amendment to the subject facility operating license. Requests for a hearing and a petition for leave to intervene shall be filed in accordance with the Commission's ''Rules of Practice for Domestic Licensing Proceedings'' in 10 CFR Part 2. Interested person(s) should consult a current copy of 10 CFR 2.309, which is available at the Commission's PDR, located at One White Flint North, Public File Area O1 F21, 11555 Rockville Pike (first floor), Rockville, Maryland. Publicly available records will be accessible from the Agencywide Documents Access and Management System's (ADAMS) Public Electronic Reading Room on the Internet at the NRC Web site, *http://www.nrc.gov/reading-rm/doc-collections/cfr/*. If a request for a hearing or petition for leave to intervene is filed by the above date, the Commission or a presiding officer designated by the Commission or by the Chief Administrative Judge of the Atomic Safety and Licensing Board Panel, will rule on the request and/or petition; and the Secretary or the Chief Administrative Judge of the Atomic Safety and Licensing Board will issue a notice of a hearing or an appropriate order.

As required by 10 CFR 2.309, a petition for leave to intervene shall set forth with particularity the interest of the petitioner in the proceeding, and how that interest may be affected by the results of the proceeding. The petition should specifically explain the reasons why intervention should be permitted with particular reference to the following general requirements: (1) The name, address and telephone number of the requestor or petitioner; (2) the nature of the requestor's/petitioner's right under the Act to be made a party to the proceeding; (3) the nature and extent of the requestor's/petitioner's property, financial, or other interest in the proceeding; and (4) the possible effect of any decision or order which may be entered in the proceeding on the requestor's/petitioner's interest. The petition must also identify the specific contentions which the petitioner/requestor seeks to have litigated at the proceeding.

Each contention must consist of a specific statement of the issue of law or fact to be raised or controverted. In addition, the petitioner/requestor shall provide a brief explanation of the bases for the contention and a concise statement of the alleged facts or expert opinion which support the contention and on which the petitioner intends to rely in proving the contention at the hearing. The petitioner/requestor must also provide references to those specific sources and documents of which the petitioner is aware and on which the petitioner intends to rely to establish those facts or expert opinion. The petition must include sufficient information to show that a genuine dispute exists with the applicant on a material issue of law or fact. Contentions shall be limited to matters within the scope of the amendment under consideration. The contention must be one which, if proven, would entitle the petitioner to relief. A petitioner/requestor who fails to satisfy these requirements with respect to at least one contention will not be permitted to participate as a party.

Those permitted to intervene become parties to the proceeding, subject to any limitations in the order granting leave to intervene, and have the opportunity to participate fully in the conduct of the hearing.

If a hearing is requested, the Commission will make a final determination on the issue of no significant hazards consideration. The final determination will serve to decide when the hearing is held. If the final determination is that the amendment request involves no significant hazards consideration, the Commission may issue the amendment and make it immediately effective, notwithstanding the request for a hearing. Any hearing held would take place after issuance of the amendment. If the final determination is that the amendment request involves a significant hazards consideration, any hearing held would take place before the issuance of any amendment.

All documents filed in NRC adjudicatory proceedings, including a request for hearing, a petition for leave to intervene, any motion or other document filed in the proceeding prior to the submission of a request for hearing or petition to intervene, and documents filed by interested governmental entities participating under 10 CFR 2.315(c), must be filed in accordance with the NRC E-Filing rule, which the NRC promulgated on August 28, 2007 (72 FR 49139). The E-Filing process requires participants to submit and serve all adjudicatory documents over the Internet, or in some cases to mail copies on electronic storage media. Participants may not submit paper copies of their filings unless they seek a waiver in accordance with the procedures described below.

To comply with the procedural requirements of E-Filing, at least ten (10) days prior to the filing deadline, the petitioner/requestor must contact the Office of the Secretary by e-mail at *hearing.docket@nrc.gov,* or by calling (301) 415–1677, to request (1) a digital ID certificate, which allows the participant (or its counsel or representative) to digitally sign documents and access the E-Submittal server for any proceeding in which it is participating; and/or (2) creation of an electronic docket for the proceeding (even in instances in which the petitioner/requestor (or its counsel or representative) already holds an NRC-issued digital ID certificate). Each petitioner/requestor will need to download the Workplace Forms Viewer™ to access the Electronic Information Exchange (EIE), a component of the E-Filing system. The Workplace Forms Viewer™ is free and is available at *http://www.nrc.gov/site-help/e-submittals/install-viewer.html.* Information about applying for a digital ID certificate is available on NRC's public Web site at *http://www.nrc.gov/site-help/e-submittals/apply-certificates.html.*

Once a petitioner/requestor has obtained a digital ID certificate, had a docket created, and downloaded the EIE viewer, it can then submit a request for hearing or petition for leave to intervene. Submissions should be in Portable Document Format (PDF) in accordance with NRC guidance available on the NRC public Web site at *http://www.nrc.gov/site-help/e-submittals.html.* A filing is considered complete at the time the filer submits its documents through EIE. To be timely, an electronic filing must be submitted to the EIE system no later than 11:59 p.m. Eastern Time on the due date. Upon receipt of a transmission, the E-Filing system time-stamps the document and sends the submitter an e-mail notice confirming receipt of the document. The EIE system also distributes an e-mail

notice that provides access to the document to the NRC Office of the General Counsel and any others who have advised the Office of the Secretary that they wish to participate in the proceeding, so that the filer need not serve the documents on those participants separately. Therefore, applicants and other participants (or their counsel or representative) must apply for and receive a digital ID certificate before a hearing request/petition to intervene is filed so that they can obtain access to the document via the E-Filing system.

A person filing electronically may seek assistance through the ''Contact Us'' link located on the NRC Web site at *http://www.nrc.gov/site-help/e-submittals.html* or by calling the NRC electronic filing Help Desk, which is available between 8 a.m. and 8 p.m., Eastern Time, Monday through Friday, excluding government holidays. The electronic filing Help Desk can be contacted by telephone at 1–866–672–7640 or by e-mail at *MSHD.Resource@nrc.gov.*

Participants who believe that they have a good cause for not submitting documents electronically must file a motion, in accordance with 10 CFR 2.302(g), with their initial paper filing requesting authorization to continue to submit documents in paper format. Such filings must be submitted by: (1) First class mail addressed to the Office of the Secretary of the Commission, U.S. Nuclear Regulatory Commission, Washington, DC 20555–0001, Attention: Rulemaking and Adjudications Staff; or (2) courier, express mail, or expedited delivery service to the Office of the Secretary, Sixteenth Floor, One White Flint North, 11555 Rockville Pike, Rockville, Maryland 20852, Attention: Rulemaking and Adjudications Staff. Participants filing a document in this manner are responsible for serving the document on all other participants. Filing is considered complete by first-class mail as of the time of deposit in the mail, or by courier, express mail, or expedited delivery service upon depositing the document with the provider of the service.

Non-timely requests and/or petitions and contentions will not be entertained absent a determination by the Commission or the presiding officer of the Atomic Safety and Licensing Board that the petition and/or request should be granted and/or the contentions should be admitted, based on a balancing of the factors specified in 10 CFR § 2.309(c)(1)(i)–(viii).

Documents submitted in adjudicatory proceedings will appear in NRC's electronic hearing docket which is available to the public at *http://ehd.nrc.gov/ehd_proceeding/home.asp,* unless excluded pursuant to an order of the Commission, an Atomic Safety and Licensing Board, or a Presiding Officer. Participants are requested not to include personal privacy information, such as social security numbers, home addresses, or home phone numbers in their filings, unless an NRC regulation or other law requires submission of such information. With respect to copyrighted works, except for limited excerpts that serve the purpose of the adjudicatory filings and would constitute a Fair Use application, Participants are requested not to include copyrighted materials in their submissions.

For further details with respect to this license amendment application, see the application for amendment dated June 3, 2008, as supplemented by letters dated April 8 and May 22, 2009, which is available for public inspection at the Commission's PDR, located at One White Flint North, File Public Area O1 F21, 11555 Rockville Pike (first floor), Rockville, Maryland. Publicly available records will be accessible electronically from the ADAMS Public Electronic Reading Room on the Internet at the NRC Web site, *http://www.nrc.gov/reading-rm/adams.html.* Persons who do not have access to ADAMS or who encounter problems in accessing the documents located in ADAMS, should contact the NRC PDR Reference staff by telephone at 1–800–397–4209, 301–415–4737, or by e-mail to *pdr.resource@nrc.gov.*

Dated at Rockville, Maryland, this 16th day of June, 2009.

For the Nuclear Regulatory Commission.

Eva A. Brown,

Senior Project Manager, Plant Licensing Branch II–2, Division of Operating Reactor Licensing, Office of Nuclear Reactor Regulation.

[FR Doc. E9–14686 Filed 6–22–09; 8:45 am]

BILLING CODE 7590–01–P

NUCLEAR REGULATORY COMMISSION

Sunshine Federal Register Notice

AGENCY HOLDING THE MEETINGS: Nuclear Regulatory Commission.

DATE: Weeks of June 22, 29, July 6, 13, 20, 27, 2009.

PLACE: Commissioners' Conference Room, 11555 Rockville Pike, Rockville, Maryland.

STATUS: Public and Closed.

Week of June 22, 2009

Thursday, June 25, 2009

1:25 p.m.

Affirmation Session (Public Meeting) (Tentative).

a. Crow Butte Resources, Inc. (License Amendment for the North Trend Expansion Area), Staff and Applicant Appeals of LBP–08–6 and LBP–09–1, Granting Hearing and Admitting Contentions (Tentative).

b. Southern Nuclear Operating Co. (Vogtle Electric Generating Plant, Units 3 and 4), LBP–09–3 (Ruling on Standing and Contention Admissibility) (Tentative).

This meeting will be Webcast live at the Web address—*http://www.nrc.gov.*

1:30 p.m.

Meeting with Advisory Committee on the Medical Uses of Isotopes (Public Meeting) (*Contact:* Ashley Cockerham, 240–888–7129).

This meeting will be Webcast live at the Web address—*http://www.nrc.gov.*

Friday, June 26, 2009

9:30 a.m.

Discussion of Security Issues (Closed—Ex. 3).

Week of June 29, 2009—Tentative

Tuesday, June 30, 2009

1 p.m.

Affirmation Session (Public Meeting) (Tentative).

U.S. Department of Energy (High-Level Waste Repository) Appeals of First Prehearing Conference Order (Tentative).

Week of July 6, 2009—Tentative

There are no meetings scheduled for the week of July 6, 2009.

Week of July 13, 2009—Tentative

There are no meetings scheduled for the week of July 13, 2009.

Week of July 20, 2009—Tentative

There are no meetings scheduled for the week of July 20, 2009.

Week of July 27, 2009—Tentative

There are no meetings scheduled for the week of July 27, 2009.

* The schedule for Commission meetings is subject to change on short notice. To verify the status of meetings, call (recording)—(301) 415–1292. Contact person for more information: Rochelle Bavol, (301) 415–1651.

The NRC Commission Meeting Schedule can be found on the Internet at: *http://www.nrc.gov/about-nrc/policy-making/schedule.html.*

The NRC provides reasonable accommodation to individuals with disabilities where appropriate. If you need a reasonable accommodation to participate in these public meetings, or need this meeting notice or the transcript or other information from the public meetings in another format (e.g., braille, large print), please notify the NRC's Disability Program Coordinator, Rohn Brown, at 301–492–2279, TDD: 301–415–2100, or by e-mail at *rohn.brown@nrc.gov*. Determinations on requests for reasonable accommodation will be made on a case-by-case basis.

This notice is distributed electronically to subscribers. If you no longer wish to receive it, or would like to be added to the distribution, please contact the Office of the Secretary, Washington, DC 20555 (301–415–1969), or send an e-mail to *darlene.wright@nrc.gov.*

Dated: June 11, 2009.

Richard J. Laufer,

Office of the Secretary.

[FR Doc. E9–14803 Filed 6–19–09; 11:15 am]

BILLING CODE 7590–01–P

SECURITIES AND EXCHANGE COMMISSION

Sunshine Act Meeting

FEDERAL REGISTER CITATION OF PREVIOUS ANNOUNCEMENT: [to be published]

STATUS: Closed Meeting.

PLACE: 100 F Street, NW., Washington, DC.

DATE AND TIME OF PREVIOUSLY ANNOUNCED MEETING: June 19, 2009 at 11 a.m.

CHANGE IN THE MEETING: Deletion of an Item.

The following item will not be considered during the Closed Meeting on Friday, June 19, 2009: Formal order of investigation.

At times, changes in Commission priorities require alterations in the scheduling of meeting items. For further information and to ascertain what, if any, matters have been added, deleted or postponed, please contact the Office of the Secretary at (202) 551–5400.

Dated: June 17, 2009.

Elizabeth M. Murphy,

Secretary.

[FR Doc. E9–14656 Filed 6–22–09; 8:45 am]

BILLING CODE 8010–01–P

DEPARTMENT OF STATE

[Public Notice 6680]

60-Day Notice of Proposed Information Collection: INTERNational Connections, Form DS–5103

AGENCY: Department of State.

ACTION: Notice of request for public comments.

SUMMARY: The Department of State is seeking Office of Management and Budget (OMB) approval for the information collection described below. The purpose of this notice is to allow 60 days for public comment in the **Federal Register** preceding submission to OMB. We are conducting this process in accordance with the Paperwork Reduction Act of 1995.

- *Title of Information Collection:* INTERNationalConnections.
- *OMB Control Number:* None.
- *Type of Request::* New Collection.
- *Originating Office:* Bureau of Human Resources, Office of Recruitment, Examination and Employment (HR/REE).
- *Form Number:* None.
- *Respondents:* Alumni of the U.S. Department of State's Student Programs, including internships, Pickerings, Rangels, Stay-in-Schools, Co-ops, *etc.*
- *Estimated Number of Respondents:* 1,000.
- *Estimated Number of Responses:* 1,000.
- *Average Hours per Response:* 30 minutes.
- *Total Estimated Burden:* 500.
- *Frequency:* On Occasion.
- *Obligation to Respond:* Voluntary.

DATES: The Department will accept comments from the public up to 60 days from June 23, 2009.

ADDRESSES: You may submit comments by any of the following methods:

- *Mailing Address:* U.S. Department of State, 2401 E Street. NW., SA1–518H, Washington, DC 20520. Attn.: Rachel Friedland.
- *E-mail: Friedlandrc@state.gov.*
- If you have access to the Internet you may submit comments electronically by going to *http://www.Regulations.Gov/index.cfm.* You must include the DS form number (if applicable), information collection title, and OMB control number in any correspondence.

FOR FURTHER INFORMATION CONTACT: Direct requests for additional information regarding the collection listed in this notice, including requests for copies of the proposed information collection and supporting documents, to Rachel C. Friedland, 2401 E Street, NW., Washington, DC 20520, who may be reached on (202) 261–8055 or at *Friedlandrc@state.gov.*

SUPPLEMENTARY INFORMATION: We are soliciting public comments to permit the Department to:

- Evaluate whether the proposed information collection is necessary for the proper performance of our functions.
- Evaluate the accuracy of our estimate of the burden of the proposed collection, including the validity of the methodology and assumptions used.
- Enhance the quality, utility, and clarity of the information to be collected.
- Minimize the reporting burden on those who are to respond, including the use of automated collection techniques or other forms of technology.

Abstract of Proposed Collection

The Department's student internship programs provide a key source of potential candidates who have an interest in, and are qualified, to become future Department employees. Naturally, HR/REE wants to strengthen and maintain its connections to this group, fostering and mentoring a pool of candidates from which to obtain successful recruits.

In June 2008, HR/REE surveyed over 3,500 former interns who served from 2005 through spring 2008. The intern alumni were queried as to their motivation in seeking an internship, whether or not they had pursued a career with either the Foreign Service or Civil Service, and what their recommendations would be for the best ways for the Department to maintain contact after the conclusion of their internships. Intern alumni endorse continued contact with Department representatives mainly through electronic means and Web site reminders of career opportunities.

In an effort to address these findings and provide viable solutions to improving student engagement prior to, during and following an internship, the Department developed an intern engagement strategy that will ultimately result in a measurable conversion of interns into Department hires for the Foreign or Civil Service. The foundation of this strategy is INTERNational Connections, a Web-based career networking site for current, former and future interns that collects pertinent information about them, their experiences and their career goals.

Methodology

Currently, the Department of State internship program employs over 1,000

participants in the summer, in addition to fall and spring internships. Unfortunately, a tracking system does not exist which would enable the Department to capture the intern-to-hire ratio or conversion rate, or track this statistic over a period of time. This project would provide that missing link.

Users will register online at *http://careers.state.gov/internconnect* and create a profile that includes the aforementioned information.

Dated: June 16, 2009.

Ruben Torres,

Executive Director, Bureau of Human Resources, U.S. Department of State.

[FR Doc. E9–14731 Filed 6–22–09; 8:45 am]

BILLING CODE 4710–15–P

DEPARTMENT OF TRANSPORTATION

Federal Aviation Administration

Advisory Circular 33–7A, Guidance for 30-Second and 2-Minute One-Engine-Inoperative (OEI) Ratings for Rotorcraft Turbine Engines

AGENCY: Federal Aviation Administration (FAA), DOT.

ACTION: Notice of issuance of advisory circular.

SUMMARY: This notice announces the issuance of Advisory Circular (AC) 33–7A, Guidance for 30-Second and 2-Minute One-Engine-Inoperative (OEI) Ratings for Rotorcraft Turbine Engines. This AC provides guidance and acceptable means, but not the only means, for demonstrating compliance with the specific requirements applicable to 30-second and 2-minute OEI rotorcraft turbine engine ratings in part 33 of Title 14 of the Code of Federal Regulations (14 CFR part 33).

DATES: The Engine and Propeller Directorate issued AC 33–7A on June 11, 2009.

FOR FURTHER INFORMATION CONTACT: The Federal Aviation Administration, Attn: Donna Mihail, Engine and Propeller Standards Staff, ANE–111, 12 New England Executive Park, Burlington, MA 01803–5299; telephone: (781) 238–7153; fax: (781) 238–7199; e-mail: *dorina.mihail@faa.gov.*

We have filed in the docket all substantive comments received, and a report summarizing them. If you wish to review the docket in person, you may go to the above address between 9 a.m. and 5 p.m., Monday through Friday, except Federal holidays. If you wish to contact the above individual directly, you can use the above telephone number or e-mail address provided. *How to Obtain Copies:* A paper copy of AC 33–7A may be obtained by writing to the U.S. Department of Transportation, Subsequent Distribution Office, DOT Warehouse, SVC–121.23, Ardmore East Business Center, 3341Q 75th Ave., Landover, MD 20785, telephone (301) 322–5377, or by faxing your request to the warehouse at (301) 386–5394. The AC will also be available on the Internet at *http://www.faa.gov/regulations policies* (then click on ''Advisory Circulars'').

(Authority: 49 U.S.C. 106(g), 40113, 44701–44702, 44704.)

Issued in Burlington, Massachusetts on June 11, 2009.

Peter A. White,

Acting Manager, Engine and Propeller Directorate, Aircraft Certification Service.

[FR Doc. E9–14617 Filed 6–22–09; 8:45 am]

BILLING CODE 4910–13–M

DEPARTMENT OF TRANSPORTATION

[NHTSA–2009–0104]

National Highway Traffic Safety Administration

Reports, Forms, and Recordkeeping Requirements Agency Information Collection Activity Under OMB Review

AGENCY: National Highway Traffic Safety Administration (NHTSA), Department of Transportation.

ACTION: Notice.

SUMMARY: In compliance with the Paperwork Reduction Act of 1995 (44 U.S.C. 3501 *et seq.*), this notice announces that the Information Collection Request (ICR) abstracted below has been forwarded to the Office of Management and Budget (OMB) for review and comment. The ICR describes the nature of the information collections and their expected burden. The **Federal Register** Notice with a 60-day comment period was published on March 12, 2009 (74 FR 10804).

DATES: Comments must be received on or before July 23, 2009.

FOR FURTHER INFORMATION CONTACT: David Bonelli, Office of Chief Counsel, NCC–113, telephone (202) 366–1834, fax (202) 366–3820; NHTSA, 1200 New Jersey Avenue, SE., Washington, DC 20590.

SUPPLEMENTARY INFORMATION:

Title: Designation of Agent for Service of Process.

OMB Control Number: 2127–0040.

Requested Expiration Date of Approval: Three years from the approval date.

Type of Request: Extension of a previously approved collection.

Affected Public: Business or other for-profit.

Form Number: N/A.

Abstract: This collection of information applies to motor vehicle and motor vehicle equipment manufacturers located outside of the United States (''foreign manufacturers''). Section 110(e) of the National Traffic and Motor Vehicle Safety Act of 1966 (49 U.S.C. 30164) requires a foreign manufacturer offering a motor vehicle or motor vehicle equipment for importation into the United States to designate a permanent resident of the United States as its agent upon whom service of notices and processes may be made in administrative and judicial proceedings. These designations are required to be filed with NHTSA. NHTSA requires this information in case it needs to advise a foreign manufacturer of a safety related defect in its products so that the manufacturer can, in turn, notify purchasers and correct the defect. This information also enables NHTSA to serve a foreign manufacturer with all administrative and judicial processes, notices, orders, decisions and requirements.

When NHTSA amended the regulation implementing that statutory requirement, codified at 49 CFR part 551, subpart D, NHTSA included an appendix containing a suggested designation form for use by foreign manufacturers and their agents. The purpose of the suggested designation format was to simplify the information collection and submission process, and thereby reduce the burden imposed on each covered manufacturer by 49 CFR part 551, subpart D. To further streamline the information collection process, NHTSA has set up a customer Web site that may be accessed at *http://www.nhtsa.dot.gov/cars/rules/manufacture/agent/customer.html.*

Estimated Annual Burden: 120 hours.

Estimated Number of Respondents: 240 respondents.

ADDRESSES: Send comments, within 30 days, to the Office of Information and Regulatory Affairs, Office of Management and Budget, 725–17th Street, NW., Washington, DC 20503, Attention NHTSA Desk Officer.

The Comments are invited on: Whether the proposed collection of information is necessary for the proper performance of the functions of the Department, including whether the information will have practical utility; the accuracy of the Department's estimate of the burden of the proposed information collection; ways to enhance

the quality, utility and clarity of the information to be collected; and ways to minimize the burden of the collection of information on respondents, including the use of automated collection techniques or other forms of information technology.

Issued on: June 17, 2009.

John Donaldson,

Assistant Chief Counsel, Legislation and General Law.

[FR Doc. E9–14681 Filed 6–22–09; 8:45 am]

BILLING CODE P

DEPARTMENT OF TRANSPORTATION

Federal Highway Administration

Notice of Final Federal Agency Actions on Proposed Highway in Washington

AGENCY: Federal Highway Administration (FHWA), DOT.

ACTION: Notice of limitation on claims for judicial review of actions by FHWA.

SUMMARY: This notice announces actions taken by FHWA that are final within the meaning of 23 U.S.C. 139(l)(1). The actions relate to a proposed highway project, the SR 520 Variable Tolling Project, in the State of Washington. Those actions grant licenses, permits, and approvals for the project.

DATES: By this notice, FHWA is advising the public of final agency actions subject to 23 U.S.C. 139(l)(1). A claim seeking judicial review of the Federal agency actions on the highway project will be barred unless the claim is filed on or before December 21, 2009. If the Federal law that authorizes judicial review of a claim provides a time period of less than 180 days for filing such claim, then that shorter time period still applies.

FOR FURTHER INFORMATION CONTACT: Pete Jilek, Urban Area Engineer, Federal Highway Administration, 711 S. Capitol Way, Suite 501, Olympia, WA 98501; telephone: (360) 753–9550; and e-mail: *pete.jilek@dot.gov.* The FHWA Washington Division's Urban Area Engineer's regular office hours are between 6 a.m. and 3:30 p.m. (Pacific Time). You may also contact Paul Krueger, Project Environmental Manager, WSDOT Urban Corridors Office, 401 2nd Avenue South, Suite 300, Seattle, WA 98104; telephone: 206–716–1135; and e-mail: *kruegep@wsdot.wa.gov.* The WSDOT Urban Corridors Office regular office hours are between 8 a.m. and 5 p.m. (Pacific Time).

SUPPLEMENTARY INFORMATION: Notice is hereby given that FHWA has taken final agency actions by issuing licenses, permits, and approvals for the following highway project: SR 520 Variable Tolling Project. The purpose of the project is to reduce congestion on SR 520 between I–5 and I–405 by implementing tolling, meeting the requirements of the Lake Washington Urban Partnership Agreement with USDOT, and raising revenue for future transportation improvements on SR 520. The project is located on the eastern shore of Lake Washington in Medina, King County.

The actions by FHWA on this project, and the laws under which such actions were taken, are described in the March 2009 Environmental Assessment (EA), June 2009 Finding of No Significant Impact (FONSI), and in other documents in the FHWA administrative record for the project. The EA, FONSI, and other documents in the FHWA administrative record are available by contacting FHWA or the Washington State Department of Transportation at the addresses provided above.

The EA and FONSI can be viewed and downloaded from the project Web site at *http://www.wsdot.wa.gov/Projects/LkWaMgt/.* Copies are also available for review through the Seattle Public Library and King County Library System.

This notice applies to all Federal agency decisions on the project as of the issuance date of this notice and all laws under which such actions were taken, including but not limited to:

1. *General:* National Environmental Policy Act [42 U.S.C. 4321–4351]; Federal-Aid Highway Act [23 U.S.C. 109].

2. *Air:* Clean Air Act, as amended [42 U.S.C. 7401–7671(q)].

3. *Land:* Section 4(f) of the Department of Transportation Act of 1966 [49 U.S.C. 303]; Landscaping and Scenic Enhancement (Wildflowers) [23 U.S.C. 319].

4. *Wildlife:* Endangered Species Act [16 U.S.C. 1531–1544]; Anadromous Fish Conservation Act [16 U.S.C. 757(a)-757(g)]; Fish and Wildlife Coordination Act [16 U.S.C. 661–667(d)]; Magnuson-Stevenson Fishery Conservation and Management Act of 1976, as amended [16 U.S.C. 1801 *et seq.*].

5. *Historic and Cultural Resources:* Section 106 of the National Historic Preservation Act of 1966, as amended [16 U.S.C. 470(f) *et seq.*]; Archaeological Resources Protection Act of 1977 [16 U.S.C. 470(aa)–11]; Archaeological and Historic Preservation Act [16 U.S.C. 469–469(c)]; Native American Grave Protection and Repatriation Act [25 U.S.C. 3001–3013].

6. *Social and Economic:* Civil Rights Act of 1964 [42 U.S.C. 2000(d)–2000(d)(1)]; American Indian Religious Freedom Act [42 U.S.C. 1996]; Farmland Protection Policy Act [7 U.S.C. 4201–4209]; the Uniform Relocation Assistance and Real Property Acquisition Policies Act of 1970, as amended [42 U.S.C. 61].

7. *Wetlands and Water Resources:* Clean Water Act, 33 U.S.C. 1251–1377 (section 404, section 401, section 319); Coastal Zone Management Act [16 U.S.C. 1451–1465]; Land and Water Conservation Fund [16 U.S.C. 4601–4604]; Safe Drinking Water Act [42 U.S.C. 300(f)–300(j)(6)]; Rivers and Harbors Act of 1899 [33 U.S.C. 401–406]; TEA–21 Wetlands Mitigation [23 U.S.C. 103(b)(6)(m), 133(b)(11)]; Flood Disaster Protection Act [42 U.S.C. 4001–4128].

8. *Hazardous Materials:* Comprehensive Environmental Response, Compensation, and Liability Act [42 U.S.C. 9601–9675]; Superfund Amendments and Reauthorization Act of 1986 [Pub. L. 99–499]; Resource Conservation and Recovery Act [42 U.S.C. 6901–6992(k)].

9. *Executive Orders:* E.O. 11990 Protection of Wetlands; E.O. 11988 Floodplain Management; E.O. 12898, Federal Actions to Address Environmental Justice in Minority Populations and Low Income Populations; E.O. 11593 Protection and Enhancement of Cultural Resources; E.O. 13007 Indian Sacred Sites; E.O. 13287 Preserve America; E.O. 13175 Consultation and Coordination with Indian Tribal Governments; E.O. 11514 Protection and Enhancement of Environmental Quality; E.O. 13112 Invasive Species.

(Catalog of Federal Domestic Assistance Program Number 20.205, Highway Planning and Construction. The regulations implementing Executive Order 12372 regarding intergovernmental consultation on Federal programs and activities apply to this program.)

Authority: 23 U.S.C. 139(l)(1).

Issued on June 17, 2009.

Peter A. Jilek, P.E.,

Urban Area Engineer, Olympia, Washington.

[FR Doc. E9–14674 Filed 6–22–09; 8:45 am]

BILLING CODE 4910–RY–P

UNITED STATES SENTENCING COMMISSION

Sentencing Guidelines for United States Courts

AGENCY: United States Sentencing Commission.

ACTION: Notice of proposed priorities. Request for public comment.

SUMMARY: As part of its statutory authority and responsibility to analyze sentencing issues, including operation of the Federal sentencing guidelines, and in accordance with Rule 5.2 of its Rules of Practice and Procedure, the United States Sentencing Commission is seeking comment on possible priority policy issues for the amendment cycle ending May 1, 2010.

DATES: Public comment should be received on or before August 24, 2009.

ADDRESSES: Send comments to: United States Sentencing Commission, One Columbus Circle, NE., Suite 2–500, South Lobby, Washington, DC 20002–8002, Attention: Public Affairs—Priorities Comment.

FOR FURTHER INFORMATION CONTACT: Michael Courlander, Public Affairs Officer, Telephone: (202) 502–4590.

SUPPLEMENTARY INFORMATION: The United States Sentencing Commission is an independent agency in the judicial branch of the United States Government. The Commission promulgates sentencing guidelines and policy statements for Federal sentencing courts pursuant to 28 U.S.C. 994(a). The Commission also periodically reviews and revises previously promulgated guidelines pursuant to 28 U.S.C. 994(o) and submits guideline amendments to the Congress not later than the first day of May each year pursuant to 28 U.S.C. 994(p).

The Commission provides this notice to identify tentative priorities for the amendment cycle ending May 1, 2010. The Commission recognizes, however, that other factors, such as the enactment of any legislation requiring Commission action, may affect the Commission's ability to complete work on any or all of its identified priorities by the statutory deadline of May 1, 2010. Accordingly, it may be necessary to continue work on any or all of these issues beyond the amendment cycle ending on May 1, 2010.

As so prefaced, the Commission has identified the following tentative priorities:

(1) Continuation of its efforts, in light of recent Supreme Court jurisprudence and pursuant to the Commission's ongoing authority and responsibility under 28 U.S.C. 995(a)(21), to solicit information regarding Federal sentencing practices, including through ongoing regional public hearings. The Commission has held regional public hearings in Atlanta, GA (February 10–11, 2009) and Palo Alto, CA (May 27–28, 2009) and intends to hold additional regional public hearings in New York, NY (July 9–10, 2009), Chicago, IL (September 9–10, 2009), Denver, CO (October 20–21, 2009), Austin, TX (November 19–20, 2009), and Phoenix, AZ (January 20–21, 2010). The Commission is soliciting information at these regional public hearings on topics that include the manner in which *United States* v. *Booker* and subsequent Supreme Court decisions have affected Federal sentencing practices and appellate review of those practices, the role of the Federal sentencing guidelines, and recommendations, if any, for appropriate revisions to Federal sentencing policy. The Commission anticipates that it will compile and publish the information and testimony received at these regional public hearings and issue a report with respect to its findings.

(2) Continuation of its work on Federal sentencing policy with the congressional, executive, and judicial branches of the government, and other interested parties, in light of *United States* v. *Booker* and subsequent Supreme Court decisions, possibly including (A) an evaluation of the impact of those decisions on the Federal sentencing guideline system; (B) development of amendments to the Federal sentencing guidelines; (C) development of recommendations for legislation regarding Federal sentencing policy; (D) a study of, and possible report to Congress on, statutory mandatory minimum penalties, including a review of the operation of the ''safety valve'' provision at 18 U.S.C. 3553(e); and (E) a study and report on the appellate standard of review applicable to post-*Booker* Federal sentencing decisions.

(3) A review of departures within the guidelines, including (A) a review of the extent to which pertinent statutory provisions prohibit, discourage, or encourage certain factors as forming the basis for departure from the guideline sentence; and (B) possible revisions to the departure provisions in the *Guidelines Manual,* including in Chapter Two and in Parts H and K of Chapter Five, in light of that review and any other information coming to the Commission's attention, as well as potential technical and conforming amendments to the *Guidelines Manual* to facilitate ease of use.

(4) Continued study of, and a possible report on, alternatives to incarceration, including (A) a study of sentencing alternatives that may be appropriate at the time of the original sentencing; and (B) consideration of any potential changes to the zones incorporated in the Sentencing Table in Chapter Five and/or other changes to the guidelines that might be appropriate in light of the information obtained from that study.

(5) Continuation of its work with Congress and other interested parties on cocaine sentencing policy to implement the recommendations set forth in the Commission's 2002 and 2007 reports to Congress, both entitled *Cocaine and Federal Sentencing Policy,* and to develop appropriate guideline amendments in response to any related legislation.

(6) Continuation of its multi-year study of the statutory and guideline definitions of ''crime of violence'', ''aggravated felony'', ''violent felony'', and ''drug trafficking crime'', including an examination of relevant circuit conflicts regarding whether any offense is categorically a ''crime of violence'', ''aggravated felony'', ''violent felony'', or ''drug trafficking crime'' for purposes of triggering an enhanced sentence under certain Federal statutes and guidelines. This study may culminate in guideline amendments and/or a report to Congress recommending statutory changes.

(7) Resolution of circuit conflicts, pursuant to the Commission's continuing authority and responsibility, under 28 U.S.C. 991(b)(1)(B) and *Braxton* v. *United States,* 500 U.S. 344 (1991), to resolve conflicting interpretations of the guidelines by the Federal courts.

(8) Multi-year review of the guidelines and their application to human rights offenses, including genocide under 18 U.S.C. 1091, war crimes under 18 U.S.C. 2441, torture and maiming to commit torture under 18 U.S.C. 2340A and 114, respectively, and child soldier offenses under 18 U.S.C. 2442, and possible promulgation of guidelines or guideline amendments with respect to these offenses.

(9) Review of child pornography offenses, and possible promulgation of guideline amendments and/or a report to Congress as a result of such review. It is anticipated that any such report would include (A) a review of the incidence of, and reasons for, departures and variances from the guideline sentence; (B) a compilation of studies on, and analysis of, recidivism by child pornography offenders; and (C) recommendations to Congress on any statutory changes that may be appropriate.

(10) Consideration of miscellaneous guideline application issues including (A) clarification of the extent to which restitution is mandatory or discretionary in various circumstances; (B) examination of, and possible guideline amendments relating to, the computation of criminal history points under § 4A1.1(e); and (C) other miscellaneous issues coming to the

Commission's attention from case law and other sources.

(11) Implementation of crime legislation enacted during the 111th Congress warranting a Commission response.

The Commission hereby gives notice that it is seeking comment on these tentative priorities and on any other issues that interested persons believe the Commission should address during the amendment cycle ending May 1, 2010. To the extent practicable, public comment should include the following: (1) A statement of the issue, including, where appropriate, the scope and manner of study, particular problem areas and possible solutions, and any other matters relevant to a proposed priority; (2) citations to applicable sentencing guidelines, statutes, case law, and constitutional provisions; and (3) a direct and concise statement of why the Commission should make the issue a priority.

Authority: 28 U.S.C. 994(a), (o); USSC Rules of Practice and Procedure 5.2.

Ricardo H. Hinojosa,

Acting Chair.

[FR Doc. E9–14685 Filed 6–22–09; 8:45 am]

BILLING CODE 2211–01–P

DEPARTMENT OF VETERANS AFFAIRS

Advisory Committee on Gulf War Veterans; Notice of Meeting

The Department of Veterans Affairs (VA) gives notice under Public Law 92–463 (Federal Advisory Committee Act) that the Advisory Committee on Gulf War Veterans will meet on July 15–16, 2009, in the Chandelier Room at the St. Regis Hotel, 923 16th and K Streets, NW., Washington, DC from 8:30 a.m. to 5 p.m. each day. The meeting is open to the public.

The purpose of the Committee is to provide advice and recommendations to the Secretary of Veterans Affairs on issues that are unique to Veterans who served in the Southwest Asia theater of operations during 1990–1991 period of the Gulf War.

On July 15, the Committee will talk with a panel of legislative directors from several Veterans Service Organizations. Each will discuss Gulf War I resolutions that their organizations have adopted, and then briefly address legislative activities they are currently engaged in that specifically relate to Gulf War I Veterans. The Committee will spend the remainder of the day refining the final report to the Secretary of Veterans Affairs. On July 16, the meeting time will be dedicated to deliberating on the Committee's final report.

Public comments will be received on July 15, 2009 from 10:45 to 11:30 a.m. and will be limited to five minutes each. Individuals wishing to speak must register not later than July 13, 2009 by contacting Lelia Jackson and by submitting 1–2 page summaries of their comments for inclusion in the official record. Members of the public may also submit written statements for the Committee's review to the Advisory Committee on Gulf War Veterans, Department of Veterans Affairs, 810 Vermont Avenue, NW., Washington, DC 20420.

Interested persons may also listen in by teleconferencing into the meeting. The toll-free teleconference line will be open daily from 8:30 a.m. until 5 p.m. (Eastern Standard Time). To register for the teleconference, contact Lelia Jackson at (202) 461–5758 or via e-mail at *lelia.jackson@va.gov*. Any member of the public seeking additional information should contact Laura O'Shea, Designated Federal Officer, at (202) 461–5765.

Dated: June 18, 2009.

By Direction of the Secretary.

E. Philip Riggin,

Committee Management Officer.

[FR Doc. E9–14720 Filed 6–22–09; 8:45 am]

BILLING CODE 8320–01–P

Federal Register

Tuesday,
June 23, 2009

Part II

Office of Foreign Assets Control

31 CFR Chapter V

Alphabetical Listing of Blocked Persons, Blocked Vessels, Specially Designated Nationals, Specially Designated Terrorists, Specially Designated Global Terrorists, Foreign Terrorist Organizations, and Specially Designated Narcotics Traffickers; Final Rule

DEPARTMENT OF THE TREASURY

Office of Foreign Assets Control

31 CFR Chapter V

Alphabetical Listing of Blocked Persons, Blocked Vessels, Specially Designated Nationals, Specially Designated Terrorists, Specially Designated Global Terrorists, Foreign Terrorist Organizations, and Specially Designated Narcotics Traffickers

AGENCY: Office of Foreign Assets Control, Treasury.

ACTION: Final rule.

SUMMARY: The Office of Foreign Assets Control (''OFAC'') of the Department of the Treasury is amending Appendix A to 31 CFR chapter V to: Reflect the addition to, or removal from, Appendix A, since it was last published, of the names of individuals and entities subject to the various economic sanctions programs administered by OFAC; provide updated identifying and clarifying information for certain individuals and entities included on the appendix; reflect the addition of Iran as an entity's associated sanctions program in certain circumstances and the removal of certain entities listed in Appendix A to 31 CFR part 560; and reflect the removal of North Korea as a sanctions program under which entities may be blocked. OFAC also is amending the ''Appendixes to Chapter V–Note,'' which contains notes applicable to both Appendix A and Appendix B to 31 CFR chapter V, to reflect changes in the status of several programs and to clarify the obligations of financial institutions with respect to blocked vessels.

DATES: *Effective Date:* June 23, 2009.

FOR FURTHER INFORMATION CONTACT: Assistant Director, Compliance Programs, tel.: 202/622–2490, Office of Foreign Assets Control, or Chief Counsel (Foreign Assets Control), *tel.:* 202/622–2410, Office of the General Counsel, Department of the Treasury, Washington, DC 20220 (not toll free numbers).

SUPPLEMENTARY INFORMATION:

Electronic and Facsimile Availability

This document and additional information concerning OFAC are available from OFAC's Web site (*http://www.treas.gov/ofac*) or via facsimile through a 24-hour fax-on demand service, tel.: (202) 622–0077.

Background

Appendix A to 31 CFR chapter V is a list that contains the names of blocked persons, blocked vessels, specially designated nationals, specially designated terrorists, specially designated global terrorists, foreign terrorist organizations, and specially designated narcotics traffickers blocked pursuant to the various economic sanctions programs administered by the Office of Foreign Assets Control (''OFAC''). OFAC is hereby amending and republishing Appendix A in its entirety to include or delete, as appropriate, the names of individuals and entities added to, or removed from, the list since it was last published, as well as to provide updated identifying and clarifying information for certain individuals and entities included on the list. OFAC also is amending the ''Appendixes to Chapter V–Note,'' which contains notes applicable to both Appendix A and Appendix B to 31 CFR chapter V, to reflect changes in the status of several programs and to clarify the obligations of financial institutions with respect to blocked vessels.

In addition, OFAC is amending Appendix A by adding Iran as an associated sanctions program to entities determined by OFAC to be entities owned or controlled by the Government of Iran for purposes of the Iranian Transactions Regulations, 31 CFR part 560 (the ''ITR''), that are also blocked or designated under other sanctions programs. OFAC is also amending Appendix A by removing entities determined to be owned or controlled by the Government of Iran that are not blocked or designated under another sanctions program. All such entities determined to be owned or controlled by the Government of Iran will continue to be listed in Appendix A to the ITR.

Finally, OFAC is amending Appendix A to reflect recent changes to the North Korea sanctions program by removing several specially designated nationals of North Korea. On June 26, 2008, the President signed Proclamation 8271, which terminated the exercise of authorities under the Trading with the Enemy Act with respect to North Korea. The President concurrently issued Executive Order 13466 of June 26, 2008 (73 FR 36787, June 27, 2008), which continued to block all property and interests in property of North Korea or a North Korea national that were blocked as of June 16, 2000, and remained blocked immediately prior to June 26, 2008, pursuant to the President's authority under the International Emergency Economic Powers Act (50 U.S.C. 1701–1706). Thus, while OFAC is removing the names of entities from Appendix A previously listed under the North Korea program to reflect the termination of the underlying authority for such listings, property and interests in property of those North Korean nationals that was blocked immediately prior to June 26, 2008, nevertheless remains blocked pursuant to Executive Order 13466.

Frequently updated information on OFAC designations is provided for examination on or downloading from OFAC's Web site (*http://www.treas.gov/ofac*). Among other data, the Web site posts changes in designations and identifying information, including alternative spellings and additional aliases, and provides lists sorted by sanctions program. Updated information on OFAC designations should be consulted before engaging in transactions that may be subject to the economic sanctions programs administered by OFAC. Please note that some OFAC sanctions programs prohibit transactions involving individuals or entities not identified on this appendix.

This amendment reflects the complete list of persons identified on OFAC's Specially Designated Nationals and Blocked Persons list as of May 20, 2009, though alternative spellings and aliases are presented in a different format on the OFAC Web site. Changes after that date are not reflected in this document.

Public Participation

Because the amendment of Appendix A to 31 CFR chapter V involves a foreign affairs function, Executive Order 12866 and the provisions of the Administrative Procedure Act (5 U.S.C. 553), requiring notice of proposed rulemaking, opportunity for public participation, and delay in effective date, are inapplicable. Because no notice of proposed rulemaking is required for this rule, the Regulatory Flexibility Act (5 U.S.C. 601–612) does not apply.

■ For the reasons set forth in the preamble, and under the authority of 3 U.S.C. 301; 50 U.S.C. App. 1–44; 21 U.S.C. 1901–1908; 8 U.S.C. 1182; 18 U.S.C. 2339B; 22 U.S.C. 287c; 31 U.S.C. 321(b); 50 U.S.C. 1601–1651; 50 U.S.C. 1701–1706; Pub. L. 110–286, 122 Stat. 2632; E.O. 12947, 60 FR 5079, 3 CFR, 1995 Comp., p. 319; E.O. 12957, 60 FR 14615, 3 CFR, 1995 Comp., p. 332; E.O. 12959, 60 FR 24757, 3 CFR, 1995 Comp., p. 356; E.O. 12978, 60 FR 54579, 3 CFR, 1995 Comp., p. 415; E.O. 13059, 62 FR 44531, 3 CFR, 1997 Comp., p. 217; E.O. 13067, 62 FR 59989, 3 CFR, 1997 Comp., p. 230; E.O. 13099, 63 FR 45167, 3 CFR, 1998 Comp., p. 208; E.O. 13219, 66 FR 34777, 3 CFR, 2001 Comp., p. 778; E.O. 13224, 66 FR 49079, 3 CFR, 2001 Comp., p. 786; E.O. 13268, 67 FR 44751, 3 CFR, 2002 Comp., p. 240; E.O. 13288, 68 FR 11457, 3 CFR, 2003 Comp., p. 186; E.O. 13304, 68 FR

32315, 3 CFR, 2003 Comp., p. 229; E.O. 13310, 68 FR 44853, 3 CFR, 2003 Comp., p. 241; E.O. 13315, 68 FR 52315, 3 CFR, 2003 Comp., p. 252; E.O. 13338, 69 FR 26751, 3 CFR, 2004 Comp., p. 168; E.O. 13348, 69 FR 44885, 3 CFR, 2004 Comp., p. 189; E.O. 13350, 69 FR 46055, 3 CFR, 2004 Comp., p. 196; E.O. 13382, 70 FR 38567, 3 CFR, 2005 Comp., p. 170; E.O. 13391, 70 FR 71201, 3 CFR, 2005 Comp., p. 206; E.O. 13396, 71 FR 7389, 3 CFR, 2006 Comp., p. 209; E.O. 13399, 71 FR 25059, 3 CFR, 2006 Comp., p. 218; E.O. 13400, 71 FR 25483, 3 CFR, 2006 Comp., p. 220; E.O. 13405, 71 FR 35485, 3 CFR, 2006 Comp., p. 231; E.O. 13412, 71 FR 61369, 3 CFR, 2006 Comp., p. 244; E.O. 13413, 71 FR 64105, 3 CFR, 2006 Comp., p. 247; E.O. 13438, 72 FR 39719, 3 CFR, 2007 Comp., p. 224; E.O. 13441, 72 FR 43499, 3 CFR, 2007 Comp., p. 232; E.O. 13448, 72 FR 60223, 3 CFR, 2007 Comp., p. 304; E.O. 13460, 73 FR 8991; E.O. 13464, 73 FR 24491; E.O. 13466, 73 FR 36787; and E.O. 13469, 73 FR 43841; the ''Appendixes to Chapter V—Note'' and Appendix A to Chapter V of 31 CFR are amended as set forth below:

■ 1. The ''Appendixes to Chapter V—Note'' is amended by:

■ a. Redesignating notes 6 and 7 as notes 7 and 8, respectively;

■ b. Adding a new note 6; and

■ c. Revising newly redesignated note 7.

The addition and revision read as follows:

Appendixes to Chapter V—NOTE

* * * * *

6. Except in limited circumstances, financial institutions are instructed to reject any funds transfer referencing a blocked vessel and must notify OFAC, preferably via facsimile with a copy of the payment instructions, that funds have been returned to remitter due to the possible involvement of a blocked vessel in the underlying transaction. See § 501.604(b)(1) of this chapter. Financial institutions should contact OFAC's Compliance Programs Division for further instructions should the name of a blocked vessel appear in shipping documents presented under a letter of credit or if noticed in a documentary collection. Blocked vessels must themselves be physically blocked should they enter U.S. jurisdiction. Freight forwarders and shippers may not charter, book cargo on, or otherwise deal with blocked vessels.

7. References to regulatory parts in chapter V or other authorities:

[BALKANS]: Western Balkans Stabilization Regulations, part 588; Executive Order 13304, 68 FR 32315;

[BELARUS]: Executive Order 13405, 71 FR 35485;

[BURMA]: Burmese Sanctions Regulations, part 537; Executive Order 13448, 72 FR 60223; Executive Order 13464, 73 FR 24491;

[COTED]: Persons Contributing to the Conflict in Cote d'Ivoire Sanctions Regulations, part 543;

[CUBA]: Cuban Assets Control Regulations, part 515;

[DARFUR]: Executive Order 13400, 71 FR 25483;

[DRC]: Executive Order 13413, 71 FR 64105;

[FTO]: Foreign Terrorist Organizations Sanctions Regulations, part 597;

[IRAN]: Iranian Transactions Regulations, part 560;

[IRAQ2]: Executive Order 13315, 68 FR 52315; Executive Order 13350, 69 FR 46055;

[IRAQ3]: Executive Order 13438, 72 FR 39719;

[JADE]: Pub. L. 110–286, 122 Stat. 2632;

[LEBANON]: Executive Order 13441, 72 FR 43499;

[LIBERIA]: Former Liberian Regime of Charles Taylor Sanctions Regulations, part 593;

[NPWMD]: Weapons of Mass Destruction Proliferators Sanctions Regulations, part 544;

[SDGT]: Global Terrorism Sanctions Regulations, part 594;

[SDNT]: Narcotics Trafficking Sanctions Regulations, part 536;

[SDNTK]: Foreign Narcotics Kingpin Sanctions Regulations, part 598;

[SDT]: Terrorism Sanctions Regulations, part 595;

[SUDAN]: Sudanese Sanctions Regulations, part 538;

[SYRIA]: Syrian Sanctions Regulations, part 542; Executive Order 13399, 71 FR 25059; Executive Order 13460, 73 FR 8991; and

[ZIMB]: Zimbabwe Sanctions Regulations, part 541; Executive Order 13391, 70 FR 71201; Executive Order 13469, 73 FR 43841.

* * * * *

Appendix A—[Amended]

■ 2. Appendix A to Chapter V of 31 CFR is revised to read as follows:

APPENDIX A TO CHAPTER V—ALPHABETICAL LISTING OF BLOCKED PERSONS, BLOCKED VESSELS, SPECIALLY DESIGNATED NATIONALS, SPECIALLY DESIGNATED TERRORISTS, SPECIALLY DESIGNATED GLOBAL TERRORISTS, FOREIGN TERRORIST ORGANIZATIONS, AND SPECIALLY DESIGNATED NARCOTICS TRAFFICKERS (as of May 20, 2009):

7TH OF TIR (a.k.a. 7TH OF TIR COMPLEX; a.k.a. 7TH OF TIR INDUSTRIAL COMPLEX; a.k.a. 7TH OF TIR INDUSTRIES; a.k.a. 7TH OF TIR INDUSTRIES OF ISFAHAN/ESFAHAN; a.k.a. MOJTAMAE SANATE HAFTOME TIR; a.k.a. SANAYE HAFTOME TIR; a.k.a. SEVENTH OF TIR), P.O. Box 81465–478, Isfahan, Iran; Mobarakeh Road Km 45, Isfahan, Iran [NPWMD]

2000 DOSE E.U. (a.k.a. DOMA E M), Calle 31 No. 1–34, Cali, Colombia; NIT # 805015749–3 (Colombia) [SDNT]

2000-DODGE S.L., Calle Gran Via 80, Madrid, Madrid, Spain; C.I.F. B83149955 (Spain) [SDNT]

2904977 CANADA, INC. (a.k.a. CARIBE SOL; a.k.a. HAVANTUR CANADA INC.), 818 rue Sherbrooke East, Montreal, Quebec H2L 1K3, Canada [CUBA]

A A TRADING FZCO, P.O. Box 37089, Dubai, United Arab Emirates [SDNTK]

A G REPRESENTACIONES LTDA., Calle 20N No. 5N–26 Of. 102, Cali, Colombia; Calle 22 Norte No. 9–43, Cali, Colombia; NIT # 800132578–3 (Colombia) [SDNT]

A K DIFUSION S.A. PUBLICIDAD Y MERCADEO, Calle 28N No. 6BN–54, Cali, Colombia; NIT # 900015699–8 (Colombia) [SDNT]

A K EDUCAL S.A. EDUCACION CON CALIDAD, Calle 28N No. 6BN–54, Cali, Colombia; NIT # 900015704–7 (Colombia) [SDNT]

A.T.E. INTERNATIONAL LTD. (a.k.a. RWR INTERNATIONAL COMMODITIES), 3 Mandeville Place, London, United Kingdom [IRAQ2]

A.W.A. ENGINEERING LIMITED, 3 Mandeville Place, London, United Kingdom [IRAQ2]

ABADIA BASTIDAS, Carmen Alicia (a.k.a. ABADIA DE RAMIREZ, Carmen Alicia), Calle 9 No. 39–65, Cali, Colombia; c/o DISDROGAS LTDA., Yumbo, Valle, Colombia; c/o RAMIREZ ABADIA Y CIA. S.C.S., Cali, Colombia; DOB 15 Jul 1934; POB Palmira, Valle, Colombia; Cedula No. 29021074 (Colombia) (individual) [SDNT]

ABASTECEDORA NAVAL Y INDUSTRIAL, S.A. (a.k.a. ANAINSA), Panama [CUBA]

ABAUNZA MARTINEZ, Javier; DOB 1 Jan 1965; POB Guernica, Vizcaya Province, Spain; D.N.I. 78.865.882 (Spain); Member ETA (individual) [SDGT]

ABBAKAR MUHAMAD, Abdul Aziz; DOB 1961; POB Sudan; Passport 562605 (Sudan) issued 28 Oct 1998; IARA Peshwar, Pakistan Director (individual) [SDGT]

ABBAS, Abdul Hussein, Italy (individual) [IRAQ2]

ABBAS, Abu (a.k.a. ZAYDAN, Muhammad); DOB 10 Dec 1948; Director of PALESTINE LIBERATION FRONT—ABU ABBAS FACTION (individual) [SDT]

ABBAS, Kassim, Lerchesbergring 23A, D–60598, Frankfurt, Germany; DOB 7 Aug 1956; POB Baghdad, Iraq (individual) [IRAQ2]

ABBES, Moustafa, Via Padova, 82, Milan, Italy; DOB 5 Feb 1962; POB Osniers, Algeria (individual) [SDGT]

ABBES, Youcef (a.k.a. ''GIUSEPPE''), Via Padova 82, Milan, Italy; Via Manzoni, 33, Cinisello Balsamo, Milan, Italy; DOB 5 Jan 1965; POB Bab El Aoued, Algeria (individual) [SDGT]

ABD AL HAFIZ, Abd Al Wahab (a.k.a. FERDJANI, Mouloud; a.k.a. ''MOURAD''; a.k.a. ''RABAH DI ROMA''), Via Lungotevere Dante, Rome, Italy; DOB 7 Sep 1967; POB Algiers, Algeria (individual) [SDGT]

ABD AL-GHAFAR, Sundus, Iraq; DOB circa 1967; POB Kirkuk, Iraq; nationality Iraq; wife of Izzat Ibrahim Al-Duri (individual) [IRAQ2]

ABD AL-KHALIQ, Adil Muhammad Mahmud (a.k.a. ABDUL KHALED, Adel

Mohamed Mahmood; a.k.a. ABDUL KHALIQ, Adel Mohamed Mahmoud); DOB 2 Mar 1984; POB Bahrain; Passport 1632207 (Bahrain) (individual) [SDGT]

ABD AL-RAHMAN, Abdullah Muhammad Rajab (a.k.a. ABU AL-KHAYR, Ahmad Hasan); DOB 3 Nov 1957; POB Kafr al-Shaykh; nationality Egypt (individual) [SDGT]

'ABD AL-RAZZIQ, Abu Sufian al-Salamabi Muhammed Ahmed (a.k.a. ABD AL RAZEQ, Abu Sufian; a.k.a. ABDELRAZEK, Abousofian; a.k.a. ABDELRAZIK, Abousfian Salman; a.k.a. ABDELRAZIK, Abousofian; a.k.a. ABDELRAZIK, Abousofiane; a.k.a. ABDELRAZIK, Sofian; a.k.a. ''ABOU EL LAYTH''; a.k.a. ''ABOULAIL''; a.k.a. ''ABU JUIRIAH''; a.k.a. ''ABU SUFIAN''; a.k.a. ''ABULAIL''; a.k.a. ''DJOLAIBA THE SUDANESE''; a.k.a. ''JOLAIBA''; a.k.a. ''OULD EL SAYEIGH''); DOB 6 Aug 1962; POB Al-Bawgah, Sudan;; alt. POB Albaouga, Sudan; nationality Canada; alt. nationality Sudan; Passport BC166787 (Canada) (individual) [SDGT]

ABD-AL-GHAFUR, Humam abd-al-Khaliq (a.k.a. ABD AL-GHAFUR, Humam Abd al-Khaliq; a.k.a. 'ABD AL-RAHMAN, Humam 'abd al-Khaliq; a.k.a. GHAFUR, Humam Abdel Khaleq Abdel; a.k.a. RASHID, Humam 'abd al-Khaliq); DOB 1945; POB ar-Ramadi, Iraq; nationality Iraq; Former Minister of Higher Education and Research; M0018061/104,issued 12 September 1993 (individual) [IRAQ2]

ABDALLAH, Mushammad Yusif, Avenue Presidente Juscelino Kubistcheck 133, Apartment 102, Center, Foz do Iguacu, Brazil; Avenue Presidente Juscelino Kubistcheck 338, Apartment 1802, Center, Foz do Iguacu, Brazil; DOB 15 Jun 1952; POB Khalia, Lebanon; citizen Lebanon; alt. citizen Paraguay; Cedula No. 1110775 (Paraguay); Passport 670317 (Lebanon); alt. Passport 137532 (Paraguay) (individual) [SDGT]

ABDALLAH, Ramadan (a.k.a. ABDULLAH, Dr. Ramadan; a.k.a. SHALLAH, Dr. Ramadan Abdullah; a.k.a. SHALLAH, Ramadan Abdalla Mohamed), Damascus, Syria; DOB 01 Jan 1958; POB Gaza City, Gaza Strip; Passport 265 216 (Egypt); SSN 589–17–6824 (United States); Secretary General of the PALESTINIAN ISLAMIC JIHAD (individual) [SDT]

ABDAOUI, Youssef (a.k.a. ABDAOUI, Youssef Ben Abdul Baki Ben Youcef; a.k.a. ''ABDELLAH''; a.k.a. ''ABDULLAH''; a.k.a. ''ABU ABDULLAH''), Piazza Giovane Italia n.2, Varese, Italy; DOB 4 Jun 1966; POB Kairouan, Tunisia; nationality Tunisia; Passport G025057 issued 23 Jun 1999 expires 5 Feb 2004 (individual) [SDGT]

ABDELHEDI, Mohamed Ben Mohamed (a.k.a. ABDELHEDI, Mohamed Ben Mohamed Ben Khalifa), via Catalani, n. 1, Varese, Italy; DOB 10 Aug 1965; POB Sfax, Tunisia; nationality Tunisia; Italian Fiscal Code BDLMMD65M10Z352S; Passport L965734 issued 6 Feb 1999 expires 5 Feb 2004 (individual) [SDGT]

ABDELNUR, Nury de Jesus, Panama (individual) [CUBA]

ABD'RABBAH, Ghuma (a.k.a. ABDRABBA, Ghoma; a.k.a. ABDRABBA, Ghunia; a.k.a. ABDURABBA, Ghunia; a.k.a. ''ABD'RABBAH''; a.k.a. ''ABU JAMIL''), Birmingham, United Kingdom; DOB 2 Sep 1957; POB Benghazi, Libya; nationality United Kingdom (individual) [SDGT]

ABDULLAH, Abdullah Ahmed (a.k.a. ABU MARIAM; a.k.a. AL-MASRI, Abu Mohamed; a.k.a. SALEH), Afghanistan; DOB 1963; POB Egypt; citizen Egypt (individual) [SDGT]

ABDULLKADIR, Hussein Mahamud, Florence, Italy (individual) [SDGT]

ABDULRAHIM, Abdulbasit (a.k.a. ABDELRAHIM, Abdelbasit; a.k.a. ABDUL RAHIM, Abdul Basit Fadil; a.k.a. ABOU BASSIR; a.k.a. ABU BASIR; a.k.a. ADBULRAHIM MAHOUD, Abdulbasit Fadil; a.k.a. AL ZAWY, Abdel Bassit Fadil; a.k.a. AL-ZAWI, 'Abd Al-Basit Fadhil; a.k.a. AL-ZWAY, 'Abd Al-Basit Fadil; a.k.a. MANSOUR, Abdallah; a.k.a. MANSOUR, Abdullah; a.k.a. MANSUR, 'Abdallah), undetermined; DOB 2 Jul 1968; POB GDABIA, LIBYA; alt. POB Ajdabiyah, Libya; nationality United Kingdom (individual) [SDGT]

ABDURRAHMAN, Mohamad Iqbal (a.k.a. A RAHMAN, Mohamad Iqbal; a.k.a. ABDURRAHMAN, Abu Jibril; a.k.a. ABU JIBRIL; a.k.a. MUQTI, Fihiruddin; a.k.a. MUQTI, Fikiruddin; a.k.a. RAHMAN, Mohamad Iqbal); DOB 17 Aug 1958; POB Tirpas-Selong Village, East Lombok, Indonesia; nationality Indonesia (individual) [SDGT]

ABIDJAN FREIGHT, Abidjan, Cote d Ivoire [LIBERIA]

ABO GHAITH, Sulaiman Jassem; DOB 14 Dec 1965; POB Kuwait (individual) [SDGT]

ABRIL CORTEZ, Oliverio (a.k.a. ABRIL CORTES, Oliverio; f.k.a. CORTEZ, Oliverio Abril), c/o AGROPECUARIA BETANIA LTDA., Cali, Colombia; c/o INVERSIONES EL GRAN CRISOL LTDA., Cali, Colombia; c/o VALLADARES LTDA., Cali, Colombia; c/o INVERSIONES GEMINIS S.A., Cali, Colombia; c/o INVERSIONES EL PENON S.A., Cali, Colombia; c/o W. HERRERA Y CIA. S. EN C., Cali, Colombia; Calle 18A No. 8A–20, Jamundi, Colombia; c/o CONSTRUCTORA DIMISA LTDA., Cali, Colombia; DOB 20 Aug 1956; Cedula No. 3002003 (Colombia); Passport AF368431 (Colombia) (individual) [SDNT]

ABRIL RAMIREZ, Wilson Arcadio, c/o COOPERATIVA MULTIACTIVA DE COLOMBIA FOMENTAMOS, Bogota, Colombia; c/o COOPERATIVA DE TRABAJO ASOCIADO ACTIVAR, Bogota, Colombia; c/o COOPCREAR, Bogota, Colombia; DOB 25 Jul 1972; Cedula No. 79643115 (Colombia); Passport 79643115 (Colombia) (individual) [SDNT]

ABS HEALTH CLUB S.A., Carrera 10 No. 93A–27, Bogota, Colombia; NIT # 830121474–8 (Colombia) [SDNT]

ABU DHESS, Mohamed (a.k.a. HASSAN, Yaser; a.k.a. ''ABU ALI''),; Holdenweg 76, Essen 45143, Germany; DOB 1 Feb 1966; POB Hashmija, Iraq; nationality possibly Palestinian;arrested 23 Apr 2002 (individual) [SDGT]

ABU HAFS THE MAURITANIAN (a.k.a. AL-SHANQITI, Khalid; a.k.a. AL-WALID, Mafouz Walad; a.k.a. AL-WALID, Mahfouz Ould); DOB 1 Jan 1975 (individual) [SDGT]

ABU MARZOOK, Mousa Mohammed (a.k.a. ABU-MARZUQ, Dr. Musa; a.k.a. ABU-MARZUQ, Sa'id; a.k.a. ABU-'UMAR; a.k.a. MARZOOK, Mousa Mohamed Abou; a.k.a. MARZOUK, Musa Abu; a.k.a. MARZUK, Musa Abu); DOB 09 Feb 1951; POB Gaza, Egypt; Passport 92/664 (Egypt); SSN 523–33–8386 (United States); Political Leader in Amman, Jordan and Damascus, Syria for HAMAS (individual) [SDT] [SDGT]

ABU NIDAL ORGANIZATION (a.k.a. ANO; a.k.a. ARAB REVOLUTIONARY BRIGADES; a.k.a. ARAB REVOLUTIONARY COUNCIL; a.k.a. BLACK SEPTEMBER; a.k.a. FATAH REVOLUTIONARY COUNCIL; a.k.a. REVOLUTIONARY ORGANIZATION OF SOCIALIST MUSLIMS) [SDT] [FTO] [SDGT]

ABU SAYYAF GROUP (a.k.a. AL HARAKAT AL ISLAMIYYA) [FTO] [SDGT]

ABU ZUBAYDAH (a.k.a. ABU ZUBAIDA; a.k.a. ABU ZUBEIDAH, Zeinulabideen Muhammed Husein; a.k.a. AL-WAHAB, Abd Al-Hadi; a.k.a. HUSAIN, Zain Al-Abidin Muhammad; a.k.a. HUSAYN, Zayn al-Abidin Muhammad; a.k.a. HUSSEIN, Zayn al-Abidin Muhammad; a.k.a. TARIQ); DOB 12 Mar 1971; POB Riyadh, Saudi Arabia; nationality Palestinian; Passport 484824 (Egypt) issued 18 Jan 1984 (individual) [SDGT]

ACCESOS ELECTRONICOS S.A.DE C.V., Avenida Cuauhtemoc 1209, CP 22290, Colonia Zona Rio, Tijuana, Baja California, Mexico; Blvd. Cuauhtemoc 1711, Oficina 305, Colonia Zona Rio, Tijuana, Baja California, Mexico; David Alfaro 25, CP 22320, Tijuana, Baja California, Mexico [SDNTK]

ACCIRENT S.A., Transversal 9C No. 130C–26 Ofc. 401, Bogota, Colombia; NIT # 830088969–0 (Colombia) [SDNT]

ACCOUNTS & ELECTRONICS EQUIPMENTS, C/O ENGINEERING EQUIPMENT CORPORATION, P.O. Box 97, Khartoum, Sudan [SUDAN]

ACE INDIC NAVIGATION CO. LTD., c/o ANGLO-CARIBBEAN SHIPPING CO. LTD., 4th Floor, South Phase 2, South Quay Plaza II, 183, March Wall, London, United Kingdom [CUBA]

ACECHILLY (vessel) [CUBA]

ACECHILLY NAVIGATION CO. LTD., c/o ANGLO-CARIBBEAN SHIPPING CO. LTD., 4th Floor, South Phase 2, South Quay Plaza II, 183, March Wall, London, United Kingdom [CUBA]

ACEFROSTY (vessel) [CUBA]

ACEFROSTY SHIPPING CO., LTD., 171 Old Bakery Street, Valletta, Malta [CUBA]

ACERO PIEDRAHITA, Cesar Augusto, c/o AGROPECUARIA LA ROBLEDA S.A., Cali, Colombia; Avenida 7N No. 17A–48, Cali, Colombia; DOB 20 May 1965; Cedula No. 70564947 (Colombia) (individual) [SDNT]

ACEVEDO PAMPLONA, Francisco Luis, Carrera 1 No. 18–52, Cali, Colombia; c/o INVERSIONES INVERVALLE S.A., Cali, Colombia; DOB 29 Apr 1965; Cedula No. 71660070 (Colombia) (individual) [SDNT]

ACEVEDO SAENZ, Delcy Patricia, c/o CAJA SOLIDARIA, Bogota, Colombia; c/o COPSERVIR LTDA., Bogota, Colombia; c/o SEGECOL LTDA., Bucaramanga, Colombia; Cedula No. 63355575 (Colombia) (individual) [SDNT]

ACHURY VARILLA, Hernan Augusto (a.k.a. ACHURY VARILA, Hernan Augusto), c/o

COOPCREAR, Bogota, Colombia; c/o COOPERATIVA MULTIACTIVA DE COLOMBIA FOMENTAMOS, Bogota, Colombia; c/o COOPERATIVA DE TRABAJO ASOCIADO ACTIVAR, Bogota, Colombia; c/o ARCA DISTRIBUCIONES LTDA., Bogota, Colombia; DOB 14 Feb 1980; Cedula No. 80226706 (Colombia); Passport 80226706 (Colombia) (individual) [SDNT]

ACTIVAR (a.k.a. COOPERATIVA DE TRABAJO ASOCIADO ACTIVAR), Carrera 6 No. 11–43 of. 505, Cali, Colombia; Calle 44 No. 17–44, Bogota, Colombia; Carrera 23 No. 37–39 of. 202, Bogota, Colombia; Calle 22B No. 56–63, Bogota, Colombia; NIT # 830099918–2 (Colombia) [SDNT]

ACUICOLA SANTA CATALINA S.A., Avenida 13 No. 100–12 Ofc. 302, Bogota, Colombia; NIT # 830010809–5 (Colombia) [SDNT]

ADEMI, Rahim; DOB 30 Jan 1954; POB Karac, Serbia and Montenegro; ICTY indictee (individual) [BALKANS]

ADEMI, Xhevat; DOB 8 Dec 1962; POB Tetovo, Macedonia (individual) [BALKANS]

ADILI, Gafur; DOB 5 Jan 1959; POB Kicevo, Macedonia (individual) [BALKANS]

ADMACOOP (a.k.a. COOPERATIVA MULTIACTIVA DE ADMINISTRACION Y MANEJO ADMACOOP), Carrera 28A No. 14–29, Bogota, Colombia; Calle 12B No. 28–58, Bogota, Colombia; NIT # 830030933–6 (Colombia) [SDNT]

ADMINCHECK LIMITED, 1 Old Burlington Street, London, United Kingdom [IRAQ2]

ADMINISTRACION DE RECURSOS FINANCIEROS E.U. (a.k.a. AFIN E.U.), Calle 20N No. 6AN–19 ofc. 67–68, Cali, Colombia; NIT # 805013294–5 (Colombia) [SDNT]

ADMINISTRACION INMOBILIARIA BOLIVAR S.A., Avenida 2CN No. 24N–92, Cali, Colombia; Calle 17N No. 6N–28, Cali, Colombia; NIT # 800149060–5 (Colombia) [SDNT]

ADMINISTRADORA DE INMUEBLES VIDA, S.A. DE C.V., Blvd. Agua Caliente 1381, Colonia Revolucion, Tijuana, Baja California, Mexico [SDNTK]

ADMINISTRADORA DE SERVICIOS VARIOS CALIMA S.A., Carrera 29A No. 9B–47, Cali, Colombia; Calle 10 No. 4–47, piso 18, Cali, Colombia; NIT # 805007874–2 (Colombia) [SDNT]

ADMINISTRADORA GANADERA EL 45 LTDA., Carrera 49A No. 48S–60 Bod. 102, Medellin, Colombia; Carrera 49 No. 61Sur-540 Bod. 137, Medellin, Colombia; NIT # 811038291–3 (Colombia) [SDNT]

ADP, S.C., Tijuana, Baja California, Mexico [SDNTK]

ADVANCED ELECTRONICS DEVELOPMENT, LTD, 3 Mandeville Place, London, United Kingdom [IRAQ2]

ADVANCED ENGINEERING WORKS, Street No. 53, P.O. Box 44690, Khartoum, Sudan [SUDAN]

ADVANCED MINING WORKS COMPANY LIMITED, Elmek Nimir Street, Khartoum Bahri/Industrial Area, P.O. Box 1034, Khartoum 11, Sudan; E-mail Address admico@sudanmail.net (Sudan) [SUDAN]

ADVANCED PETROLEUM COMPANY (a.k.a. APCO), House No. 10, Block 9, Street 33, Amarat, P.O. Box 12811, Khartoum, Sudan [SUDAN]

ADVANCED TRADING AND CHEMICAL WORKS COMPANY LIMITED (a.k.a. ADVANCED CHEMICAL WORKS; a.k.a. ADVANCED COMMERCIAL AND CHEMICAL WORKS COMPANY LIMITED), 19 Al Amarat Street, P.O. Box 44690, Khartoum, Sudan; E-mail Address accw@htg-sdn.com (Sudan); alt. E-mail Address advance@sudanmail.net (Sudan) [SUDAN]

AERO CONTINENTE (USA) INC. (a.k.a. AERO CONTINENTE, INC.), 2858 NW 79 Avenue, Miami, FL 33122; Business Registration Document # P94000013372 (United States); US FEIN 65–0467983 [BPI-SDNTK]

AERO CONTINENTE E.I.R.L., Avenida Jose Pardo 601, Int. 16, Lima, Peru; RUC # 20510752695 (Peru) [SDNTK]

AERO CONTINENTE S.A (a.k.a. AERO CONTINENT S.A.; a.k.a. AEROCONTINENTE S.A.; n.k.a. NUEVO CONTINENTE S.A.; n.k.a. NUEVOCONTINENTE S.A.; a.k.a. WWW.AEROCONTINENTE.COM; a.k.a. WWW.AEROCONTINENTE.COM.PE; n.k.a. WWW.NUEVOCONTINENTE.COM.PE), Avenida Portugal No. 20, Of. 27—Comuna Santiago Centro, Santiago, Chile; Av. Colon 119 Piso 3 Of. 6 (CP-X5000EPB), Cordoba, Argentina; Plaza Camacho TDA 3-C, La Molina, Lima, Peru; Av. Rufino Torrico 981, Lima, Peru; Av. Peru 3421, San Martin de Porres, Lima, Peru; Av. Grau 624, Barranco, Lima, Peru; Jr. 9 de Diciembre 160, Ayacucho, Peru; Portal de Carnes 254, Cusco, Peru; Alonso de Alvarado 726, Rioja, Peru; Av. Tumbes 217, Tumbes, Peru; Av. 27 De Febrero No. 102, Edif Miguel Mejia Urr. El Vergel, Santo Domingo, Dominican Republic; Rivadavia 209 (CP–5500), Mendoza, Argentina; Av. Larco 123–2 Do Piso, Miraflores II-Larco, Lima, Peru; Av. Peru 3421, San Martin, Lima, Peru; Leon Velarde 584, Puerto Maldonado, Peru; Jr. Moyobamba 101, Tarapoto, Peru; Jr. Pizarro 470, Trujillo, Peru; Bogota, Colombia; Jr. Francisco Bolognesi 125, Piso 16, Miraflores, Lima 18, Peru; Av. Camino Real 441, San Isidro, Lima, Peru; Av. Benavides 4581, Surco I, Lima, Peru; Sta Catalina 105 A-B, Arequipa, Peru; Boyaca 1012 Y P. Icaza, Guayaquil, Ecuador; Av. Saenz Pena 184, Callao, Lima, Peru; Calle San Roman 175, Juliaca, Peru; Jr. 7 de Junio 861, Pucallpa, Peru; Av. Thames 2406 (CP 1425) C.F., Buenos Aires, Argentina; Av. Amazonas No. 22–11B Y Veintimilla-Quito, Quito, Ecuador; Calle Rio Rhin No. 64, P.B. Col. Cuauhtemoc C.P., Mexico City D.F. 065000, Mexico; Sarmiento 854 Piso 8 Of. 3 y 4 (CP-S2000CMN), Rosario (Santa Fe), Argentina; Av. Grau 602 D, Barranco, Lima, Peru; Av. Enrique Llosa 395-A, Magdalena, Lima, Peru; C.C. San Miguel Shopping Center, TDA. 50—Av. La Mar 2291, San Miguel, Lima, Peru; Av. La Marina 2095, San Miguel, Lima, Peru; Jr. Libertad 945–951, Piura, Peru; 1ra Avenida de Los Palos Grandes, Centro Comercial Quinora P.B., Locales L–1A y L–2A, Caracas, Venezuela; 8940 NW 24 Terrace, Miami, FL 33172; Av. Arequipa 326, Santa Beatriz, Lima, Peru; Av. Jose Pardo 601, Miraflores, Lima, Peru; Jr. Prospero 232, Iquitos, Peru; Av. Antunez de Mayolo 889, Los Olivos, Lima, Peru; Av. Pardo 605, Miraflores I-Pardo, Lima, Peru; Av. La Encalada 1587, (C.C. El Polo Block A Oficina 213), Surco II-C.C. El Polo, Lima, Peru; Jr. 2 de Mayo 381, Cajamarca, Peru; Calle San Jose 867–879, Chiclayo, Peru; Calle Apurimac 265, Tacna, Peru; Jr. Libertad 139, Yurimaguas, Peru; Business Registration Document # F01000003035 (United States); NIT # 8300720300 (Colombia); RUC # 20108363101 (Peru); US FEIN 55–2197267 [SDNTK]

AERO COURIER CARGO S.A., Avenida Jose Pardo 601, Edificio La Alameda, Lima, Peru; RUC # 20507531823 (Peru) [SDNTK]

AEROCARIBBEAN AIRLINES (a.k.a. AERO-CARIBBEAN), Havana, Cuba [CUBA]

AEROCOMERCIAL ALAS DE COLOMBIA LTDA., Avenida El Dorado Entrada 2 Int. 6, Bogota, Colombia; NIT # 800049071–7 (Colombia) [SDNT]

AEROSPACE INDUSTRIES ORGANIZATION (a.k.a. SAZMANE SANAYE HAVA FAZA; a.k.a. ''AIO''), Langare Street, Nobonyad Square, Tehran, Iran [NPWMD]

AEROTAXI EJECUTIVO, S.A., Managua, Nicaragua [CUBA]

AEROVIAS ATLANTICO LTDA. (a.k.a. AEROATLANTICO LTDA.), Aeropuerto Int. Ernesto Cortisoz Hangar 1, Barranquilla Atlantico, Colombia; NIT # 890109958–1 (Colombia) [SDNT]

AFGHAN SUPPORT COMMITTEE (ASC) (a.k.a. AHYA UL TURAS; a.k.a. JAMIAT AYAT-UR-RHAS AL ISLAMIA; a.k.a. JAMIAT IHYA UL TURATH AL ISLAMIA; a.k.a. LAJNAT UL MASA EIDATUL AFGHANIA), Grand Trunk Road, near Pushtoon Garhi Pabbi, Peshawar, Pakistan; Cheprahar Hadda, Mia Omar Sabaqah School, Jalalabad, Afghanistan [SDGT]

AFGHAN, Sher (a.k.a. AFGHAN, Shear; a.k.a. AFGHAN, Shir; a.k.a. AZIZ, Mohammad; a.k.a. KHAN, Abdullah); DOB 1962; alt. DOB 1959; POB Pakistan (individual) [SDNTK]

AFRICAN DRILLING COMPANY, Khartoum, Sudan [SUDAN]

AFRICAN OIL CORPORATION, P.O. Box 1, Khartoum North, Sudan [SUDAN]

AGBAS CONSULTORES, S.A. DE C.V. (a.k.a. AGBA CONSULTORES CASA DE CAMBIO), Blv Agua Caliente 148, Col. Revolucion Rio Panuco Rio Yaqui, Tijuana, Baja California, Mexico; Boulevard Agua Caliente, Tijuana, Baja California, Mexico; Boulevard Agua Caliente No. 148, Col. Revolucion, Tijuana, Baja California, Mexico; R.F.C. ACO040630893 (Mexico) [SDNTK]

AGENCIA DE VIAJES GUAMA (a.k.a. GUAMA TOUR; a.k.a. GUAMATUR, S.A.; a.k.a. VIAJES GUAMA TOURS), Bal Harbour Shopping Center, Via Italia, Panama City, Panama [CUBA]

AGHA, Haji Abdul Manan (a.k.a. SAIYID, Abd Al-Man'am), Pakistan (individual) [SDGT]

AGHA-JANI, Dawood (a.k.a. AGHAJANI, Davood; a.k.a. AGHAJANI, Davoud; a.k.a. AGHAJANI, Davud; a.k.a. AGHAJANI, Kalkhoran Davood; a.k.a. AQAJANI KHAMENA, Da'ud); DOB 23 Apr 1957;

POB Ardebil, Iran; nationality Iran; Passport I5824769 (Iran) (individual) [NPWMD]

AGRICOLA DOIMA DEL NORTE DEL VALLE LTDA., Carrera 4 No. 12–20 of. 206, Cartago, Valle, Colombia; Km 12 Via Santa Ana Molina, Hacienda Doima, Cartago, Colombia; NIT # 800144713–3 (Colombia) [SDNT]

AGRICOLA GANADERA HENAO GONZALEZ Y CIA. S.C.S., Carrera 4A No. 16–04 apt. 303, Cartago, Colombia; Carrera 1 No. 13–08, Cartago, Colombia; Km. 5 Via Aeropuerto, Cartago, Colombia; NIT # 800021615–1 (Colombia) [SDNT]

AGRICOLA GAXIOLA S.A. DE C.V., Calle Colonizadores No. exterior 83 y No.interior D, Esq. Quintas de las Aves, Col. Las Quintas, Hermosillo, Sonora 83240, Mexico; R.F.C. AGA9607119X3 (Mexico) [SDNTK]

AGRICOLA HUMYAMI LTDA., Apartado Aereo 30352, Cali, Colombia [SDNT]

AGRICOLA SONGO LTDA., Calle 74 No. 53–30, Barranquilla, Colombia; NIT # 890115794–3 (Colombia) [SDNT]

AGRICULTURAL BANK OF SUDAN, P.O. Box 1363, Khartoum, Sudan [SUDAN]

AGRICULTURAL DEVELOPMENT BANK OF ZIMBABWE (a.k.a. AGRIBANK; a.k.a. AGRICULTURAL BANK OF ZIMBABWE), 15th Floor, Hurudza House, 14–16 Nelson Mandela Avenue, Harare, Zimbabwe; Box 369, Harare, Zimbabwe; Phone No. 263–4–774426; Fax No. 263–4–774556 [ZIMBABWE]

AGRO MASCOTAS S.A. (a.k.a. AGROPECUARIA 100%; a.k.a. AGROPECUARIA EL ARBOLITO; a.k.a. AGROPECUARIA EL GALLO; a.k.a. AGROPECUARIA LA COLMENA; a.k.a. AGROPECUARIA LA HORMIGA; a.k.a. AGROTODO; a.k.a. AGROTORO), Calle 1N No. 4–36, Popayan, Colombia; Carrera 2 No. 13–17, Puerto Boyaca, Colombia; Carrera 23 No. 29–03, Tulua, Colombia; Carrera 2A No. 15–10, Dorada, Colombia; Carrera 7 No. 12–58, Cartago, Colombia; Calle 19 No. 12–36, Tunja, Colombia; Calle 3 No. 11–104, Santander de Quilichao, Colombia; Calle 35 No. 27–83, Villavicencio, Colombia; Carrera 10 No. 12–02 Esq., Girardot, Colombia; Carrera 4 No. 16–87, Soacha, Colombia; Carrera 10 No. 18–02, Pereira, Colombia; Carrera 18 No. 22–17, Manizales, Colombia; Carrera 16 No. 43–15, Dos Quebradas, Colombia; Calle 35 No. 27–69, Villavicencio, Colombia; Carrera 14 No. 18–51, Armenia, Colombia; Carrera 19 No. 11–52, Dutaima, Colombia; Carrera 33 No. 19–35, Villavicencio, Colombia; Avenida 3 Bis No. 23CN–13, Cali, Colombia; Calle 28 No. 27–06, Palmira, Colombia; Carrera 1 No. 14–41, Ibague, Colombia; Carrera 10 No. 11–14 Esq., Jamundi, Colombia; Carrera 13 No. 13–41, Bogota, Colombia; Carrera 13 No. 15–42, Santa Rosa, Colombia; Transversal 29 No. 39–92, Bogota, Colombia; NIT # 815002808–1 (Colombia) [SDNT]

AGROGANADERA LA ISABELA S.A., Avenida 4 No. 6N–61, Ofc. 510, Cali, Colombia; NIT # 900100335–6 (Colombia) [SDNT]

AGROINVERSORA URDINOLA HENAO Y CIA. S.C.S., Calle 5 No. 22–39 of. 205, Cali, Colombia; Calle 52 No. 28E–30, Cali, Colombia; NIT # 800042180–1 (Colombia) [SDNT]

AGROPECUARIA BETANIA LTDA., Calle 70N No. 14–31, Cali, Colombia; Carrera 61 No. 11–58, Cali, Colombia [SDNT]

AGROPECUARIA EL NILO S.A. (a.k.a. AGRONILO S.A.), Corregimiento El Bohio Finca El Nilo, Toro, Valle, Colombia; Establecimientos Corabastos Bodega Reina Puesto 35A, Bogota, Colombia; Calle 14 No. 4–123, La Union, Valle, Colombia; Establecimientos Corabastos Bodega Reina Puesto 64A, Bogota, Colombia; NIT # 800099699–5 (Colombia) [SDNT]

AGROPECUARIA LA ROBLEDA S.A., Carrera 61 No. 11–58, Cali, Colombia; Avenida 2DN No. 24N–76, Cali, Colombia; NIT # 800160353–2 (Colombia) [SDNT]

AGROPECUARIA LINDARAJA S.A., Calle 4N No. 1N–10, Ofc. 901, Cali, Colombia; NIT # 890327360–0 (Colombia) [SDNT]

AGROPECUARIA MIRALINDO S.A., Carrera 8N No. 17A–12, Cartago, Colombia; NIT # 836000446–4 (Colombia) [SDNT]

AGROPECUARIA PALMA DEL RIO S.A., Carrera 17 No. 91–42, Apt. 502, Bogota, Colombia; Carrera 5 No. 29–32, C.C. La Quinta, Ibague, Tolima, Colombia; NIT # 830061299–7 (Colombia) [SDNT]

AGROPECUARIA Y REFORESTADORA HERREBE LTDA., Avenida 2N No. 7N–55 of. 501, Cali, Colombia [SDNT]

AGUDELO VELASQUEZ, Norberto Antonio (a.k.a. ''AMADO''), Guasca, Cundinamarca, Colombia; DOB 20 Aug 1955; POB Colombia; citizen Colombia; nationality Colombia; Cedula No. 4590874 (Colombia) (individual) [SDNTK]

AGUDELO, Ivan de Jesus, Avenida 6N No. 47–197 17, Cali, Colombia; c/o INDUSTRIA MADERERA ARCA LTDA., Cali, Colombia (individual) [SDNT]

AGUIAR, Raul, Avenida de Concha, Espina 8, E–28036, Madrid, Spain; Director, Banco Nacional de Cuba (individual) [CUBA]

AGUILAR AMAO, Miguel, c/o ADP, S.C., Tijuana, Baja California, Mexico; Avenida Del Sol 4551, Fraccionamiento La Escondida, Tijuana, Baja California, Mexico; Avenida Del Sol 4551–2, Fraccionamiento La Escondida 22440, Tijuana, Baja California, Mexico; c/o Distribuidora Imperial De Baja California S.A. de C.V., Tijuana, Baja California, Mexico; DOB 29 Sep 1953; POB Santa Agueda,Baja California Sur,Mexico; Credencial electoral 101924629544 (Mexico); R.F.C. AUAM–530929 (Mexico) (individual) [SDNTK]

AGUILAR BERNAL, Sonia, c/o COMPANIA DE FOMENTO MERCANTIL S.A., Cali, Colombia; c/o CONSTRUCCIONES PROGRESO DEL PUERTO S.A., Puerto Tejada, Colombia; Calle 14C No. 29B–24, Cali, Colombia; c/o CRIADERO LA LUISA E.U., Cali, Colombia; c/o GESTORA MERCANTIL S.A., Cali, Colombia; Cedula No. 31988264 (Colombia); Passport 31988264 (Colombia) (individual) [SDNT]

AGUILAR RAMIREZ, Gerardo Antonio (a.k.a. ''CESAR''); DOB 20 Sep 1962; POB Colombia; Cedula No. 16447616 (Colombia); alt. Cedula No. 16148998 (Colombia) (individual) [SDNTK]

AGUILAR ROJAS, Luz Elena, c/o PARQUE INDUSTRIAL PROGRESO S.A., Yumbo, Colombia; c/o GEOPLASTICOS S.A., Cali, Colombia; DOB 14 Mar 1966; POB Cali, Valle, Colombia; Cedula No. 31940893 (Colombia); Passport 31940893 (Colombia) (individual) [SDNT]

AGUILAR TORRES, Evangelina, c/o CASA DE EMPENO RIO TIJUANA, S.A. DE C.V., Tijuana, Baja California, Mexico; DOB 2 May 1956; POB Tijuana, Baja California, Mexico (individual) [SDNTK]

AGUILERA QUIJANO, Harold, c/o ASESORIAS COSMOS LTDA., Cali, Colombia; DOB 28 Feb 1958; Cedula No. 16594227 (Colombia) (individual) [SDNT]

AGUIRRE CARDONA, Armando, Mexico; DOB 28 Oct 1955; POB Nuevo Leon, Monterrey, Mexico; citizen Mexico; nationality Mexico; C.U.R.P. AUCA551028HNLGRR03 (Mexico); R.F.C. AUCA551028 (Mexico) (individual) [SDNTK]

AGUIRRE GALINDO, Manuel, c/o COMPLEJO TURISTICO OASIS, S.A. DE C.V., Rosarito, Baja California, Mexico; c/o INMOBILIARIA ESPARTA S.A. DE C.V., Tijuana, Baja California, Mexico; DOB 2 Nov 1950; POB Tijuana, Baja California, Mexico; R.F.C. AUGM–501102-PM3 (Mexico) (individual) [SDNTK]

AGUIRRE SANCHEZ, Blanca Armida, c/o MEXGLOBO, S.A. DE C.V., Tijuana, Baja California, Mexico; C. Cerro Alto No. 7855, Fracc. Lomas de Agua Caliente, Tijuana, Baja California, Mexico; Calle Ixtapan de la Sal No. 12137, Fraccionamiento Colinas de Agua Caliente, Tijuana, Baja California, Mexico; c/o MULTISERVICIOS AGSA, S.A. DE C.V., Tijuana, Baja California, Mexico; c/o COCINA DE TIJUANA, S. DE R.L. DE C.V., Tijuana, Baja California, Mexico; Avenida Central No. 10200, Departamento 401 Guion ''E,'' Colonia Hipodromo Dos, Tijuana, Baja California, Mexico; c/o HACIENDA CIEN ANOS DE TIJUANA, S. DE R.L. DE C.V., Tijuana, Baja California, Mexico; c/o AGBAS CONSULTORES, S.A. DE C.V., Tijuana, Baja California, Mexico; Blvd. Agua Caliente No. 148, Tijuana, Baja California, Mexico; Diaz Miron, Calle 1903 3 Zona Central, Tijuana, Baja California, Mexico; DOB 7 Mar 1958; POB Tijuana, Baja California, Mexico; citizen Mexico; nationality Mexico; Electoral Registry No. AGSNBL58030702M801 (Mexico); Passport 04020067193 (Mexico); R.F.C. AUSB580307CR4 (Mexico); alt. R.F.C. AUSB580307CRA (Mexico) (individual) [SDNTK]

AGUIRRE SANCHEZ, Claudia, Priv del Cesar No. 7013, Fracc. Racial Agua Caliente, Tijuana, Baja California, Mexico; c/o MULTISERVICIOS AGSA, S.A. DE C.V., Tijuana, Baja California, Mexico; Cll Gladiolas 11449, Lomas de Agua Caliente c de Las Torres c de S Fco, Tijuana, Baja California 22024, Mexico; Calle Garita de Otay No. 1408, Colonia Mesa de Otay, Tijuana, Baja California, Mexico; c/o MEXGLOBO, S.A. DE C.V., Tijuana, Baja California, Mexico; Calle Gladiolas No. 28, Fraccionamiento Del Prado, Tijuana, Baja California, Mexico; c/o HACIENDA CIEN ANOS DE TIJUANA, S. DE R.L. DE C.V., Tijuana, Baja California, Mexico; c/o COCINA DE TIJUANA, S. DE R.L. DE C.V., Tijuana, Baja California, Mexico; DOB 4

Jan 1969; POB Tijuana, Baja California, Mexico; citizen Mexico; nationality Mexico; Cedula No. 1993358 (Mexico); Electoral Registry No. AGSNCL69010402M000 (Mexico) (individual) [SDNTK]

AGUSTIN GRAJALES Y CIA. LTDA., Factoria La Rivera, La Union, Valle, Colombia; NIT # 800166941–0 (Colombia) [SDNT]

AHMAD, Farhad Kanabi (a.k.a. HAMAWANDI, Kawa; a.k.a. OMAR ACHMED, Kaua), Lochhamer Str. 115, Munich 81477, Germany; Kempten Prison, Germany; DOB 1 Jul 1971; POB Arbil, Iraq; nationality Iraq; Travel Document Number A0139243 (Germany) (individual) [SDGT]

AHMAD, Muhammad Yunis (a.k.a. AHMED, Muhammad Yunis; a.k.a. AL-AHMED, Muhammad Yunis; a.k.a. AL-BADRANI, Muhammad Yunis Ahmad; a.k.a. AL-MOALI, Mohammed Yunis Ahmed), Wadi al-Hawi, Iraq; Damascus, Syria; Dubai, United Arab Emirates; Mosul, Iraq; Al-Hasaka, Syria; Al-Dawar Street, Bludan, Syria; DOB 1949; POB Al-Mowall, Mosul, Iraq; nationality Iraq (individual) [IRAQ2]

AHMAD, Najmuddin Faraj (a.k.a. FARRAJ, Fateh Najm Eddine; a.k.a. KREKAR, Mullah; a.k.a. NAJMUDDIN, Faraj Ahmad), Heimdalsgate 36-V, 0578 Oslo, Norway; DOB 7 Jul 1956; alt. DOB 17 Jun 1963; POB Olaqloo Sharbajer Village, al-Sulaymaniyah Governorate, Iraq; citizen Iraq (individual) [SDGT]

AHMAD, Rasem, P.O. Box 1318, Amman, Jordan (individual) [IRAQ2]

AHMAD, Tariq Anwar al-Sayyid (a.k.a. FARAG, Hamdi Ahmad; a.k.a. FATHI, Amr Al-Fatih); DOB 15 MAR 63; POB Alexandria, Egypt (individual) [SDGT]

AHMAD, Wallid Issa, Iraq (individual) [IRAQ2]

AHMAD, Zaki Izzat Zaki; DOB 21 Apr 1960; POB Sharqiyah, Egypt; nationality Egypt (individual) [SDGT]

AHMADIAN, Ali Akbar (a.k.a. AHMADIYAN, Ali Akbar); DOB circa 1961; POB Kerman, Iran; citizen Iran; nationality Iran (individual) [NPWMD]

AHMED NACER, Yacine (a.k.a. YACINE DI ANNABA), Vicolo Duchessa, 16, Naples, Italy; Via Genova, 121, Naples, Italy; Rue Mohamed Khemisti, 6, Annaba, Algeria; DOB 2 Dec 1967; POB Annaba, Algeria (individual) [SDGT]

AHMED, Adnan S. Hasan (a.k.a. ADNAN, Ahmed S. Hasan; a.k.a. SULTAN, Ahmed), Amman, Jordan (individual) [IRAQ2]

AIDER, Farid (a.k.a. ACHOUR, Ali), Via Milanese, 5, 20099 Sesto San Giovanni, Milan, Italy; DOB 12 Oct 1964; POB Algiers, Algeria; Italian Fiscal Code DRAFRD64R12Z301C (individual) [SDGT]

AIR BAGAN HOLDINGS PTE. LTD. (a.k.a. AIR BAGAN; a.k.a. AIRBAGAN), Room No. T1–112 & T–112A, Level 1, Main Terminal Building, Suvarnabhumi Airport, Bangpli, Ssamutprakarn 10540, Thailand; Pathein Hotel, Kanthonesint, Petheing-Monywa Road, Burma; Sandoway Inn, Thandwe, Burma; 179 (Nya) Bogyoke Road, San Sai (Kha) Quarter, Tachileik, Burma; Room (2), YMCA Building, Bogyoke Aung San Road, Forestry Quarter, Taunggyi, Burma; 414 Bogyoke Road, Kaw Thaung, Burma; 572 Ye Yeik That Street, Pear Ayekari Hotel, Myauk Ywa Quarter, Burma; 134 Bogyoke Street, Myoma Quarter, Taunggyi, Burma; 545 Orchard Road, #01–04 Far East Shopping Centre, Singapore 238882, Singapore; No. 13 (B), Zay Tan Gyi Street, Quarter (3), Zay Than Gyi Quarter, Kyaing Tong, Burma; No. 407, Zei Phyu Kone Quarter, Near Ngapali Junction, Thandwe, Burma; Unit #310, 3rd Floor, Silom Complex, 191 Silom Road, Silom Bangrak, Bangkok 10500, Thailand; Room-17, Stadium Building, Theinni Main Road, 12 Quarter, Lashio, Burma; No. 4, Naypyidaw Airport Compound, Naypyidaw, Burma; 9, 78th Street, Bet, 33rd and 34th Street, Mandalay, Burma; 156 Bogyoke Aung San Road, Aung Chan Thar Building, San Sai Quarter, Tachileik, Burma; No. E (4), Construction Housing, Sumbrabun Road, Ayar Quarter, Myitkyina, Burma; No. Mitharsu (Family Video), No. 131/B Zay Taung Bak Lane, Zayit Quarter, Dawei, Burma; 3, Aung Thate Di Quarter, Nyaung U, Burma; No. 445, Anawa Quarter, Myinttzu Thaka Road, Kawthaung, Burma; Kalaymyo, Red Cross Building, Bogyoke Street, Kalay Myo, Burma; 244 Bet, Duwa Za Junn & Bayin Naung St., Third Quarter, Myitkyina, Burma; 56 Shwe Taung Gyar Street, Bahan Township, Yangon, Burma; Myeik Golf Club, Pearl Mon Hotel, Airport Junction, Myeik, Burma; 48 Quarter 2, Zay Tan Lay Yat, Kyaing Tong, Burma; Doing business as AIR BAGAN [BURMA]

AIR BAGAN LIMITED (a.k.a. AIR BAGAN), No. Mitharsu (Family Video), No. 131/B Zay Taung Bak Lane, Zayit Quarter, Dawei, Burma; No.6/88, 6 Quarter, Lalway, Naypyitaw, Burma; No. E (4), Construction Housing, Sumbrabun Road, Ayar Quarter, Myitkyina, Burma; Kalaymyo, Red Cross Building, Bogyoke Street, Kalay Myo, Burma; 414 Bogyoke Road, Kaw Thaung, Burma; Unit #310, 3rd Floor, Silom Complex, 191 Silom Road, Silom Bangrak, Bangkok 10500, Thailand; 179 (Nya) Bogyoke Road, San Sai (Kha) Quarter, Tachileik, Burma; No. 407, Zei Phyu Kone Quarter, Near Ngapali Junction, Thandwe, Burma; Room (2), YMCA Building, Bogyoke Aung San Road, Forestry Quarter, Taunggyi, Burma; 156 Bogyoke Aung San Road, Aung Chan Thar Building, San Sai Quarter, Tachileik, Burma; 56 Shwe Taung Gyar Street, Bahan Township, Yangon, Burma; No. 445, Anawa Quarter, Myinttzu Thaka Road, Kawthaung, Burma; 48 Quarter 2, Zay Tan Lay Yat, Kyaing Tong, Burma; 134 Bogyoke Street, Myoma Quarter, Taunggyi, Burma; No. 13 (B) Zay Tan Gyi Street, Quarter (3), Zay Than Gyi Quarter, Kyaing Tong, Burma; 244 Bet, Duwa Zaw Junn & Bayin Naung St., Thida Quarter, Myitkyina, Burma; Sandoway Inn, Thandwe, Burma; 9, 78th Street, Bet, Mandalay, Burma; Room No. T1–112 & T1–112A, Level 1, Main Terminal Building, Suvarnabhumi Airport, Bangpli, Ssamutprakarn 10540, Thailand; Myeik Golf Club, Pearl Mon Hotel, Airport Junction, Myeik, Burma; 3, Aung Thate Di Quarter, Nyaung U, Burma; Room-17, Stadium Building, Theinni Main Road, 12 Quarter, Lashio, Burma; No. 4, Naypyidaw, Airport Compound, Naypyidaw, Burma; 572 Ye Yeik Tha Street, Pear Ayekari Hotel, Myauk Ywa Quarter, Burma; Pathein Hotel, Kanthonesint, Petheing-Monywa Road, Burma; Doing business as AIR BAGAN. [BURMA]

AIR CESS (a.k.a. AIR CESS EQUATORIAL GUINEA; a.k.a. AIR CESS HOLDINGS LTD.; a.k.a. AIR CESS INC. 360-C; a.k.a. AIR CESS LIBERIA; a.k.a. AIR CESS RWANDA; a.k.a. AIR CESS SWAZILAND (PTY.) LTD.; a.k.a. AIR PAS; a.k.a. AIR PASS; a.k.a. CESSAVIA; a.k.a. CHESS AIR GROUP; a.k.a. PIETERSBURG AVIATION SERVICES & SYSTEMS), P.O. Box 7837, Sharjah, United Arab Emirates; Islamabad, Pakistan; P.O. Box 3962, Sharjah, United Arab Emirates; Entebbe, Uganda; Malabo, Equatorial Guinea [LIBERIA]

AIR ZORY LTD. (a.k.a. AIR ZORI; a.k.a. AIR ZORI LTD.), 6 Zenas Kanther Str, Nicosia 1065, Cyprus; 54 G.M. Dimitrov Blvd, Sofia BG–1125, Bulgaria [LIBERIA]

AIRBAS TRANSPORTATION FZE (a.k.a. AIR BAS; a.k.a. AIR BASS; a.k.a. AIRBAS TRANSPORTATION INC.; a.k.a. AVIABAS), P.O. Box 8299, Sharjah, United Arab Emirates; 811 S. Central Expwy, Ste 210, Richardson, TX 75080 [LIBERIA]

AIRMORES SHIPPING CO. LTD. (a.k.a. AIMOROS SHIPPING CO. LTD.), c/o MELFI MARINE CORPORATION S.A., Oficina 7, Edificio Senorial, Calle 50, Apartado 31, Panama City 5, Panama [CUBA]

AKIRAPHOKIN, Thit (a.k.a. SUTHIT, Samsaeng; a.k.a. THIT, Akiraphokin; a.k.a. WEI, Ta Han; a.k.a. ''AH HAN''), 88/2 Soi Klong Nam Kaew, Tambon Sam Sen Nok, Huay Khwang, Bangkok, Thailand; Burma; c/o DEHONG THAILONG HOTEL CO., LTD., Yunnan Province, China; DOB 3 Mar 1972; National ID No. 310095657121 (Thailand); Passport K491821 (Thailand) (individual) [SDNTK]

AKLI, Mohamed Amine (a.k.a. ''ELIAS''; a.k.a. ''KALI SAMI''; a.k.a. ''KILLECH SHAMIR''); DOB 30 Mar 1972; POB Abordj El Kiffani, Algeria (individual) [SDGT]

AL AMLOOD TRADING LLC, Ali Rashid Lootah Building, Al Khaleej Street, Al Baraha Area, Dubai, United Arab Emirates; P.O. Box 3517, Dubai, United Arab Emirates; C.R. No. 79190 (United Arab Emirates) [SDNTK]

AL BARAKA EXCHANGE LLC, P.O. Box 20066, Dubai, United Arab Emirates; P.O. Box 3313, Deira, Dubai, United Arab Emirates [SDGT]

AL FURQAN (a.k.a. ASSOCIATION FOR CITIZENS RIGHTS AND RESISTANCE TO LIES; a.k.a. ASSOCIATION FOR EDUCATION, CULTURAL, AND TO CREATE SOCIETY—SIRAT; a.k.a. ASSOCIATION FOR EDUCATION, CULTURE AND BUILDING SOCIETY—SIRAT; a.k.a. ASSOCIATION OF CITIZENS FOR THE SUPPORT OF TRUTH AND SUPPRESSION OF LIES; a.k.a. DZEMIJETUL FURKAN; a.k.a. DZEM'IJJETUL FURQAN; a.k.a. DZEMILIJATI FURKAN; a.k.a. IN SIRATEL; a.k.a. ISTIKAMET; a.k.a. SIRAT), Put Mladih Muslimana 30a, 71 000 Sarajevo, Bosnia and Herzegovina; ul. Strossmajerova 72, Zenica, Bosnia and Herzegovina; Muhameda Hadzijahica #42, Sarajevo, Bosnia and Herzegovina [SDGT]

AL GHABRA, Mohammed, East London, United Kingdom; DOB 1 Jun 1980; POB Damascus, Syria; nationality United Kingdom; Passport 094629366 (United Kingdom) (individual) [SDGT]

AL LAMI, Isma'il Hafiz (a.k.a. AL-LAMI, Ismail; a.k.a. AL-LAMI, Isma'il Hafith Abid 'Ali; a.k.a. AL-ZARGAWI, Ismai'il Hafuz; a.k.a. IZAJAWI, Ismail Hafeth; a.k.a. ''DAR'A, Abu''; a.k.a. ''DIRI, Abu''; a.k.a. ''DURA, Abu''; a.k.a. ''HAYDAR, Abu''), Sadr City, Baghdad, Iraq; Iran; DOB circa 1957; POB Baghdad, Iraq; citizen Iraq (individual) [IRAQ3]

AL MANAR TV, PO Box 354/25, Beirut, Lebanon; Al Manar TV, Abed al Nour Street, Haret Hriek, Beirut, Lebanon; info@manartv.com; www.manartv.com; www.almanar.com.lb [SDGT]

AL MAZIDIH, Akram Turki Hishan (a.k.a. AL-HISHAN, Akram Turki; a.k.a. AL-MAZIDIH, Akram Turki Hishan; a.k.a. ''ABU AKRAM''; a.k.a. ''ABU JARRAH''), Zabadani, Syria; DOB 1974; alt. DOB 1975; alt. DOB 1979 (individual) [SDGT]

AL MAZIDIH, Badran Turki Hishan (a.k.a. ABU GHADIYAH; a.k.a. AL MEZIDI, Badran Turki Hishan; a.k.a. AL-MAZIDIH, Badran Turki al-Hishan; a.k.a. AL-SHA'BANI, Badran Turki Hisham al-Mazidih; a.k.a. AL-TURKI, Badran; a.k.a. HISHAM, Badran al-Turki; a.k.a. HISHAN, Badran Turki; a.k.a. SHALASH, Badran Turki Hayshan; a.k.a. ''ABU 'ABDALLAH''; a.k.a. ''ABU ABDULLAH''; a.k.a. ''ABU 'AZZAM''), Zabadani, Syria; DOB 1977; alt. DOB 1979; alt. DOB 1978; POB Mosul, Iraq (individual) [SDGT]

AL MAZIDIH, Ghazy Fezza Hishan (a.k.a. HISHAN, Ghazy Fezzaa; a.k.a. ''ABU FAYSAL''; a.k.a. ''ABU GHAZZY''; a.k.a. ''SHLASH, Mushari Abd Aziz Saleh''), Zabadani, Syria; DOB 1974; alt. DOB 1975 (individual) [SDGT]

AL NOUR RADIO (a.k.a. AL NOUR BROADCASTING STATION; a.k.a. AL NUR RADIO; a.k.a. RADIO ANNOUR), Abed Al Nour Street, PO Box 197/25, Alghobeiri, Haret Hriek, Beirut, Lebanon; info@al-nour.net; www.al-nour.net [SDGT]

AL OBAIDI, Tarik Nasser S. (a.k.a. AL-'UBAYDI, Tarik; a.k.a. AL-'UBAYDI, Tariq), Baghdad, Iraq; DOB 1945; POB Baghdad, Iraq; nationality Iraq; Passport 212331 (Iraq) (individual) [IRAQ2]

AL RAHMAN, Shaykh Umar Abd; DOB 03 May 1938; POB Egypt; Chief Ideological Figure of ISLAMIC GAMA'AT (individual) [SDT]

AL RASHID TRUST (a.k.a. AL AMEEN TRUST; a.k.a. AL AMIN TRUST; a.k.a. AL AMIN WELFARE TRUST; a.k.a. AL MADINA TRUST; a.k.a. AL RASHEED TRUST; a.k.a. AL-AMEEN TRUST; a.k.a. AL-MADINA TRUST; a.k.a. AL-RASHEED TRUST; a.k.a. AL-RASHID TRUST), Office Dha'rb-i-M'unin, Top Floor, Dr. Dawa Khan Dental Clinic Surgeon, Main Baxar, Mingora, Swat, Pakistan; Office Dha'rb-i-M'unin, Room no. 3, Third Floor, Moti Plaza, near Liaquat Bagh, Murree Road, Rawalpindi, Pakistan; Kitab Ghar, 4 Dar-el-Iftah, Nazimabad, Karachi, Pakistan; Office Dha'rb-i-M'unin, Z.R. Brothers, Katchehry Road, Chowk Yadgaar, Peshawar, Pakistan; Jamia Masjid, Sulaiman Park, Begum Pura, Lahore, Pakistan; Office Dha'rb-i-M'unin, opposite Khyber Bank, Abbottabad Road, Mansehra, Pakistan; Operations in Afghanistan: Herat, Jalalabad, Kabul, Kandahar, Mazar Sharif. Also operations in: Kosovo, Chechnya [SDGT]

AL SAADI, Faraj Farj Hassan (a.k.a. AL SA'IDI, Faraj Faraj Hussein; a.k.a. IMAD MOUHAMED ABDELLAH; a.k.a. MOHAMDED ABDULLA IMAD; a.k.a. MUHAMAD ABDULLAH IMAD; a.k.a. ''HAMZA AL LIBI''), Viale Bligny 42, Milan, Italy; DOB 28 Nov 1980; POB Libya; alt. POB Jordan; alt. POB Palestine; alt. POB Gaza; nationality Libya; alt. nationality Palestinian; alt. nationality Jordan; arrested United Kingdom (individual) [SDGT]

AL SUNUT DEVELOPMENT COMPANY (a.k.a. ALSUNUT DEVELOPMENT COMPANY), No. 1 Block 5 East, Khartoum 2, P.O. Box 1840, Khartoum, Sudan; Website www.alsunut.com (Sudan); E-mail Address info.AlsunutKhartoum@alsunut.com; E-mail Address info.AlsunutDubai@alsunut.com [SUDAN]

AL WASEL AND BABEL GENERAL TRADING LLC, Baghdad, Iraq; Ibrahim Saeed Lootah Building, Al Ramool Street, P.O. Box 10631 & 638, Rashidya, Dubai, United Arab Emirates [IRAQ2]

AL ZAWAHIRI, Dr. Ayman (a.k.a. AL-ZAWAHIRI, Aiman Muhammad Rabi; a.k.a. AL-ZAWAHIRI, Ayman; a.k.a. SALIM, Ahmad Fuad); DOB 19 Jun 1951; POB Giza, Egypt; Passport 1084010 (Egypt); alt. Passport 19820215; Operational and Military Leader of JIHAD GROUP (individual) [SDT] [SDGT]

AL-ADL, Sayf (a.k.a. AL-'ADIL, Saif); DOB 1963; POB Egypt (individual) [SDGT]

AL-AHMAD, Ahmad Muhammad Yunis (a.k.a. AL-BADANI, Ahmad Muhammad Mahmud 'Abdallah; a.k.a. AL-BARRANI, Ahmad Muhammad Al-Abdullah), Al-Mazzah Al-Jabal District, 6 Subdistrict, 3 area, Al-Iskan complex, 40/2, Fifth Floor, Damascus, Syria; DOB 19 Sep 1978; POB Al-Anbar, Iraq; nationality Iraq; Passport H0347417 (Iraq) issued 20 Feb 2003 expires 19 Feb 2011; passport place of issue: Al-Anbar, Iraq (individual) [IRAQ2]

AL-AHMAD, Mahmud Dhiyab (a.k.a. AL-AHMAD, Mahmoud Dhiyab; a.k.a. AL-AHMAD, Mahmoud Diab); DOB 1953; POB Mosul or Baghdad, Iraq; nationality Iraq; Former Minister of Interior (individual) [IRAQ2]

AL-AHMAD, Sa'ad Muhammad Yunis, Damascus, Syria; DOB 1 Jan 1981; POB Baghdad, Iraq; nationality Iraq; Identification Number 159014 (Iraq) (individual) [IRAQ2]

AL-AKHTAR TRUST INTERNATIONAL (a.k.a. AKHTARABAD MEDICAL CAMP; a.k.a. AL-AKHTAR MEDICAL CENTRE; a.k.a. AZMAT PAKISTAN TRUST; a.k.a. AZMAT-E-PAKISTAN TRUST; a.k.a. PAKISTAN RELIEF FOUNDATION; a.k.a. PAKISTANI RELIEF FOUNDATION), Spin Boldak, Afghanistan; Islamabad, Pakistan; Mirpur Khas, Pakistan; Bahawalpur, Pakistan; Tando-Jan-Muhammad, Pakistan; Gilgit, Pakistan; ST–1/A, Gulshan-e-Iqbal, Block 2, Karachi 75300, Pakistan; Bawalnagar, Pakistan; Gulistan-e-Jauhar, Block 12, Karachi, Pakistan; and all other offices worldwide [SDGT]

ALAKTAN COTTON TRADING COMPANY (a.k.a. ALAKTAN TRADING COMPANY), P.O. Box 2067, Khartoum, Sudan [SUDAN]

AL–ALAMI, Imad Khalil; DOB 1956; POB Gaza (individual) [SDGT]

AL-ALI, Hamid (a.k.a. AL-ALI, Dr. Hamed Abdullah; a.k.a. AL-'ALI, Hamed; a.k.a. AL-'ALI, Hamed bin 'Abdallah; a.k.a. AL-'ALI, Hamid 'Abdallah; a.k.a. AL-'ALI, Hamid 'Abdallah Ahmad; a.k.a. AL-ALI, Hamid bin Abdallah Ahmed; a.k.a. ''ABU SALIM''); DOB 20 Jan 1960; citizen Kuwait (individual) [SDGT]

ALAMINOS (f.k.a. RUBY ISLANDS) (vessel) [CUBA]

AL-AMIRI, Adnan Talib Hassim, 43 Palace Mansions, Hammersmith, London, United Kingdom (individual) [IRAQ2]

AL-AQIL, Aqeel Abdulaziz Aqeeil (a.k.a. ALAQEEL, Aqeel Abdulaziz A.; a.k.a. AL-AQIL, Aqeel Abdulaziz); DOB 29 Apr 1949; POB Unaizah, Saudi Arabia; nationality Saudi Arabia; Passport E 839024 issued 3 Jan 2004 expires 8 Nov 2008; alt. Passport C 1415363—16/2/1421H issued 21 May 2000 (individual) [SDGT]

AL-AQSA (ASBL) (a.k.a. AL-AQSA CHARITABLE FOUNDATION; a.k.a. AL-AQSA CHARITABLE ORGANIZATION; a.k.a. AL-AQSA E.V.; a.k.a. AL-AQSA FOUNDATION; a.k.a. AL-AQSA INTERNATIONAL FOUNDATION; a.k.a. AL-AQSA ISLAMIC CHARITABLE SOCIETY; a.k.a. AL-AQSA SINABIL ESTABLISHMENT; a.k.a. AL-AQSA SPANM I STIFTELSE; a.k.a. AL-AQSA SPANMAL STIFTELSE; a.k.a. AQSSA SOCIETY; a.k.a. AQSSA SOCIETY YEMEN; a.k.a. CHARITABLE AL-AQSA ESTABLISHMENT; a.k.a. CHARITABLE SOCIETY TO HELP THE NOBLE AL-AQSA; a.k.a. FORENINGEN AL-AQSA; a.k.a. ISLAMIC CHARITABLE SOCIETY FOR AL-AQSA; a.k.a. MU' ASA AL-AQSA AL-KHAYRIYYA; a.k.a. MU' ASSA SANABIL AL-AQSA AL-KHAYRIYYA; a.k.a. NUSRAT AL-AQSA AL-SHARIF; a.k.a. SANABIL AL-AQSA CHARITABLE FOUNDATION; a.k.a. STICHTING AL-AQSA; a.k.a. SWEDISH CHARITABLE AQSA EST.), BD Leopold II 71, 1080 Brussels, Belgium [SDGT]

AL-AQSA E.V. (a.k.a. AL-AQSA ASBL; a.k.a. AL-AQSA CHARITABLE FOUNDATION; a.k.a. AL-AQSA CHARITABLE ORGANIZATION; a.k.a. AL-AQSA FOUNDATION; a.k.a. AL-AQSA INTERNATIONAL FOUNDATION; a.k.a. AL-AQSA ISLAMIC CHARITABLE SOCIETY; a.k.a. AL-AQSA SINABIL ESTABLISHMENT; a.k.a. AL-AQSA SPANM I STIFTELSE; a.k.a. AL-AQSA SPANMAL STIFTELSE; a.k.a. AQSSA SOCIETY; a.k.a. AQSSA SOCIETY YEMEN; a.k.a. CHARITABLE AL-AQSA ESTABLISHMENT; a.k.a. CHARITABLE SOCIETY TO HELP THE NOBLE AL-AQSA; a.k.a. FORENINGEN AL-AQSA; a.k.a. ISLAMIC CHARITABLE SOCIETY FOR AL-AQSA; a.k.a. MU' ASA AL-AQSA AL-KHAYRIYYA; a.k.a. MU' ASSA SANABIL AL-AQSA AL-KHAYRIYYA; a.k.a. NUSRAT AL-AQSA AL-SHARIF;

a.k.a. SANABIL AL-AQSA CHARITABLE FOUNDATION; a.k.a. STICHTING AL-AQSA; a.k.a. SWEDISH CHARITABLE AQSA EST.), Kappellenstrasse 36, Aachen D–52066, Germany; (Head Office) [SDGT]

AL-AQSA FOUNDATION (a.k.a. AL-AQSA ASBL; a.k.a. AL-AQSA CHARITABLE FOUNDATION; a.k.a. AL-AQSA CHARITABLE ORGANIZATION; a.k.a. AL-AQSA E.V.; a.k.a. AL-AQSA INTERNATIONAL FOUNDATION; a.k.a. AL-AQSA ISLAMIC CHARITABLE SOCIETY; a.k.a. AL-AQSA SINABIL ESTABLISHMENT; a.k.a. AL-AQSA SPANM I STIFTELSE; a.k.a. AL-AQSA SPANMAL STIFTELSE; a.k.a. AQSSA SOCIETY; a.k.a. AQSSA SOCIETY YEMEN; a.k.a. CHARITABLE AL-AQSA ESTABLISHMENT; a.k.a. CHARITABLE SOCIETY TO HELP THE NOBLE AL-AQSA; a.k.a. FORENINGEN AL-AQSA; a.k.a. ISLAMIC CHARITABLE SOCIETY FOR AL-AQSA; a.k.a. MU' ASA AL-AQSA AL-KHAYRIYYA; a.k.a. MU' ASSA SANABIL AL-AQSA AL-KHAYRIYYA; a.k.a. NUSRAT AL-AQSA AL-SHARIF; a.k.a. SANABIL AL-AQSA CHARITABLE FOUNDATION; a.k.a. STICHTING AL-AQSA; a.k.a. SWEDISH CHARITABLE AQSA EST.), P.O. Box 2364, Islamabad, Pakistan [SDGT]

AL-AQSA FOUNDATION (a.k.a. AL-AQSA ASBL; a.k.a. AL-AQSA CHARITABLE FOUNDATION; a.k.a. AL-AQSA CHARITABLE ORGANIZATION; a.k.a. AL-AQSA E.V.; a.k.a. AL-AQSA INTERNATIONAL FOUNDATION; a.k.a. AL-AQSA ISLAMIC CHARITABLE SOCIETY; a.k.a. AL-AQSA SINABIL ESTABLISHMENT; a.k.a. AL-AQSA SPANM I STIFTELSE; a.k.a. AL-AQSA SPANMAL STIFTELSE; a.k.a. AQSSA SOCIETY; a.k.a. AQSSA SOCIETY YEMEN; a.k.a. CHARITABLE AL-AQSA ESTABLISHMENT; a.k.a. CHARITABLE SOCIETY TO HELP THE NOBLE AL-AQSA; a.k.a. FORENINGEN AL-AQSA; a.k.a. ISLAMIC CHARITABLE SOCIETY FOR AL-AQSA; a.k.a. MU' ASA AL-AQSA AL-KHAYRIYYA; a.k.a. MU' ASSA SANABIL AL-AQSA AL-KHAYRIYYA; a.k.a. NUSRAT AL-AQSA AL-SHARIF; a.k.a. SANABIL AL-AQSA CHARITABLE FOUNDATION; a.k.a. STICHTING AL-AQSA; a.k.a. SWEDISH CHARITABLE AQSA EST.), Noblev 79 NB, 21433 Malmo, Sweden; Nobelvagen 79 NB, 21433 Malmo, Sweden [SDGT]

AL-AQSA FOUNDATION (a.k.a. AL-AQSA ASBL; a.k.a. AL-AQSA CHARITABLE FOUNDATION; a.k.a. AL-AQSA CHARITABLE ORGANIZATION; a.k.a. AL-AQSA E.V.; a.k.a. AL-AQSA INTERNATIONAL FOUNDATION; a.k.a. AL-AQSA ISLAMIC CHARITABLE SOCIETY; a.k.a. AL-AQSA SINABIL ESTABLISHMENT; a.k.a. AL-AQSA SPANM I STIFTELSE; a.k.a. AL-AQSA SPANMAL STIFTELSE; a.k.a. AQSSA SOCIETY; a.k.a. AQSSA SOCIETY YEMEN; a.k.a. CHARITABLE AL-AQSA ESTABLISHMENT; a.k.a. CHARITABLE SOCIETY TO HELP THE NOBLE AL-AQSA; a.k.a. FORENINGEN AL-AQSA; a.k.a. ISLAMIC CHARITABLE SOCIETY FOR AL-AQSA; a.k.a. MU' ASA AL-AQSA AL-KHAYRIYYA; a.k.a. MU' ASSA SANABIL AL-AQSA AL-KHAYRIYYA; a.k.a. NUSRAT AL-AQSA AL-SHARIF; a.k.a. SANABIL AL-AQSA CHARITABLE FOUNDATION; a.k.a. STICHTING AL-AQSA; a.k.a. SWEDISH CHARITABLE AQSA EST.) [SDGT]

AL-AQSA FOUNDATION (a.k.a. AL-AQSA ASBL; a.k.a. AL-AQSA CHARITABLE FOUNDATION; a.k.a. AL-AQSA CHARITABLE ORGANIZATION; a.k.a. AL-AQSA E.V.; a.k.a. AL-AQSA INTERNATIONAL FOUNDATION; a.k.a. AL-AQSA ISLAMIC CHARITABLE SOCIETY; a.k.a. AL-AQSA SINABIL ESTABLISHMENT; a.k.a. AL-AQSA SPANM I STIFTELSE; a.k.a. AL-AQSA SPANMAL STIFTELSE; a.k.a. AQSSA SOCIETY; a.k.a. AQSSA SOCIETY YEMEN; a.k.a. CHARITABLE AL-AQSA ESTABLISHMENT; a.k.a. CHARITABLE SOCIETY TO HELP THE NOBLE AL-AQSA; a.k.a. FORENINGEN AL-AQSA; a.k.a. ISLAMIC CHARITABLE SOCIETY FOR AL-AQSA; a.k.a. MU' ASA AL-AQSA AL-KHAYRIYYA; a.k.a. MU' ASSA SANABIL AL-AQSA AL-KHAYRIYYA; a.k.a. NUSRAT AL-AQSA AL-SHARIF; a.k.a. SANABIL AL-AQSA CHARITABLE FOUNDATION; a.k.a. STICHTING AL-AQSA; a.k.a. SWEDISH CHARITABLE AQSA EST.), P.O. Box 421083, 2nd Floor, Amoco Gardens, 40 Mint Road, Fordsburg 2033, Johannesburg, South Africa; P.O. Box 421082, 2nd Floor, Amoco Gardens, 40 Mint Road, Fordsburg 2033, Johannesburg, South Africa [SDGT]

AL-AQSA ISLAMIC BANK (a.k.a. AL-AQSA AL-ISLAMI BANK), P.O. Box 3753, al-Beireh, West Bank; Ramallah II 970, West Bank [SDT] [SDGT]

AL-AQSA MARTYRS BRIGADE (a.k.a. AL-AQSA MARTYRS BATTALION) [SDT] [FTO] [SDGT]

AL-ARABI TRADING COMPANY LIMITED, Lane 11, Hai Babil, Baghdad District 929, Iraq [IRAQ2]

AL-ATRUSH, Abd al-Wahhab Umar Mirza (a.k.a. AL-ATRUSHI, Abdel Wahab); DOB 1936; a former minister of state, Iraq (individual) [IRAQ2]

AL-AWADI, Hussein Qaid; nationality Iraq; Former Ba'th party regional command chairman, Ninawa, (individual) [IRAQ2]

ALAWI, Abdel-Salam Abdel-Rahman (a.k.a. ALLAWI, Salam), Iraq; General Manager of INDUSTRIAL BANK OF IRAQ (individual) [IRAQ2]

AL-AZAWI, Dafir, Iraq (individual) [IRAQ2]

AL-AZAWI, Hatem Hamdan, Deli Abbas, Iraq; Diyali, Al-Khalis Sector, Iraq; DOB circa 1937 (individual) [IRAQ2]

AL-AZZAWI, Hikmat Mizban Ibrahim; DOB 1934; POB Diyala, Iraq; nationality Iraq; Former Deputy Prime Minister and Finance Minister (individual) [IRAQ2]

ALBA CERDA, Salvador, c/o ADP, S.C., Tijuana, Baja California, Mexico; c/o Farmacia Vida Suprema, S.A. DE C.V, Tijuana, Baja California, Mexico; Avenida Pacifico No. 2834, Seccion Costa de Oro Fraccionamiento Playas de Tijuana 22250, Tijuana, Baja California, Mexico; c/o Distribuidora Imperial De Baja California, S.A. DE C.V., Tijuana, Baja California, Mexico; Avenida Pacifico No. 2408, Seccion Costa de Oro Fraccionamiento Playas de Tijuana 22250, Tijuana, Baja California, Mexico; DOB 25 Dec 1947; POB Patzcuaro, Michoacan; Credencial electoral 125324910951 (Mexico) (individual) [SDNTK]

AL-BAHTIYTI, Muhammad Rab'a al-Sayid (a.k.a. AL-BAHTITI, Muhammad Mahmud; a.k.a. AL-BAHTITI, Muhammad Mahmud Rabi' al-Zayd; a.k.a. AL-BAHTITI, Muhammad Rabi'; a.k.a. AL-HATITI, Muhammad Rabi' al-Sa'id; a.k.a. AL-MASRI, Abu Dujana); DOB 1971; POB al-Sharqiyyah, Egypt; nationality Egypt (individual) [SDGT]

AL-BAKOUN ALA AL-AHD ORGANIZATION (a.k.a. FAITHFUL TO THE OATH), Algeria [SDGT]

ALBAN BURBANO, Luis Alberto (a.k.a. ALBAN URBANO, Luis Alberto; a.k.a. CALARCA, Marco Leon; a.k.a. CALARCA, Marcos Leon); DOB 16 Aug 1957; POB Cali, Valle, Colombia; Cedula No. 16588328 (Colombia) (individual) [SDNTK]

ALBANIAN NATIONAL ARMY (a.k.a. AKSH; a.k.a. ANA) [BALKANS]

AL-BARAKAAT, Mogadishu, Somalia; Dubai, United Arab Emirates [SDGT]

AL-BARAKAAT BANK, Mogadishu, Somalia [SDGT]

AL-BARAKAAT BANK OF SOMALIA (a.k.a. BARAKAAT BANK OF SOMALIA; a.k.a. BBS), Mogadishu, Somalia; Bossaso, Somalia [SDGT]

AL-BARAKAAT GROUP OF COMPANIES SOMALIA LIMITED (a.k.a. AL-BARAKAT FINANCIAL COMPANY), Mogadishu, Somalia; P.O. Box 3313, Dubai, United Arab Emirates [SDGT]

AL-BARAKAAT WIRING SERVICE, 2940 Pillsbury Avenue, Suite 4, Minneapolis, MN 55408 [SDGT]

AL-BARAKAT FINANCE GROUP, Mogadishu, Somalia; Dubai, United Arab Emirates [SDGT]

AL-BARAKAT FINANCIAL HOLDING COMPANY, Mogadishu, Somalia; Dubai, United Arab Emirates [SDGT]

AL-BARAKAT GLOBAL TELECOMMUNICATIONS (a.k.a. BARAKAAT GLOBETELCOMPANY), Mogadishu, Somalia; Hargeysa, Somalia; P.O. Box 3313, Dubai, United Arab Emirates [SDGT]

AL-BARAKAT INTERNATIONAL (a.k.a. BARACO CO.), Box 2923, Dubai, United Arab Emirates [SDGT]

AL-BARAKAT INVESTMENTS, P.O. Box 3313, Deira, Dubai, United Arab Emirates [SDGT]

AL-BASHAIR TRADING COMPANY, LTD (a.k.a. AL-BASHAAIR TRADING COMPANY, LTD; a.k.a. AL-BASHAER TRADING COMPANY, LTD; a.k.a. AL-BASHA'IR TRADING COMPANY, LTD; a.k.a. AL-BASHIR TRADING COMPANY, LTD), Sadoon St, Al-Ani Building, First Floor, Baghdad, Iraq [IRAQ2]

AL-BATHALI, Mubarak Mushakhas Sanad (a.k.a. AL BATHALI, Mubarak Mishkhis Sanad; a.k.a. AL-BADHALI, Mubarak Mishkhis Sanad; a.k.a. AL-BATHALI, Mubarak; a.k.a. AL-BATHALI, Mubarak Mishkhas Sanad; a.k.a. AL-BAZALI, Mubarak Mishkhas Sanad; a.k.a. AL-BTHALY, Mobarak Meshkhas Sanad); DOB

1 Oct 1961; citizen Kuwait; Passport 101856740 (Kuwait) (individual) [SDGT]

AL-BAZZAZ, Hikmet Abdallah (a.k.a. AL-BAZAZ, Hikmet Abdullah), Iraq; Former Minister of Education (individual) [IRAQ2]

ALBERDI URANGA, Itziar; DOB 7 Oct 1963; POB Durango, Vizcaya Province, Spain; D.N.I. 78.865.693 (Spain); Member ETA (individual) [SDGT]

ALBISU IRIARTE, Miguel; DOB 7 Jun 1961; POB San Sebastian, Guizpucoa Province, Spain; D.N.I. 15.954.596 (Spain); Member ETA (individual) [SDGT]

AL-BUTHE, Soliman (a.k.a. AL BUTHI, Soliman H.S.; a.k.a. AL-BATAHAI, Soliman; a.k.a. AL-BATHI, Soliman; a.k.a. AL-BUTHE, Suliman Hamd Suleiman); DOB 8 Dec 1961; POB Cairo, Egypt; nationality Saudi Arabia; Passport B049614 (Saudi Arabia); alt. Passport C536660 (Saudi Arabia) issued 5 May 2001 expires 11 Mar 2006 (individual) [SDGT]

ALCALDE LINARES, Angel; DOB 2 May 1943; POB Portugalete, Vizcaya Province, Spain; D.N.I. 15.390.353 (Spain); Member ETA (individual) [SDGT]

ALCANTAR PRECIADO, Simon, c/o GRUPO INMOBILIARIO PROFESIONAL BAJA, S.A DE C.V., Tijuana, Baja California, Mexico; c/o PROMOTORA FIN, S.A., Tijuana, Baja California, Mexico; DOB 12 Feb 1964; POB Jalisco, Mexico; citizen Mexico; nationality Mexico; C.U.R.P. AAPS640212HJCLRM09 (Mexico) (individual) [SDNTK]

AL-DAGMA, Aschraf (a.k.a. ''NOOR''), Clemens-August Strasse 10, Kolpinghaus, Beckum 59269, Germany; Leipziger Strasse 64, Altenburg 04600, Germany; DOB 28 Apr 1969; POB Abasan, Gaza Strip; nationality possibly Palestinian;arrested 23 Apr 2002 (individual) [SDGT]

AL-DAJANI, Leila N.S., P.O. Box 1318, Amman, Jordan (individual) [IRAQ2]

AL-DAJANI, Nadim S., P.O. Box 1318, Amman, Jordan (individual) [IRAQ2]

AL-DAJANI, Sa'ad, P.O. Box 1318, Amman, Jordan (individual) [IRAQ2]

ALDANA JUNCA, Jose Tiberio, c/o RIONAP S.A., Quito, Ecuador; c/o LATINFARMACOS S.A., Quito, Ecuador; DOB 13 Jul 1973; Cedula No. 79609622 (Colombia); Passport 79609622 (Colombia) (individual) [SDNT]

AL-DARI, Harith Sulayman (a.k.a. AL DARI, Hareth; a.k.a. AL-DARI AL-ZAWBAI, Harith; a.k.a. AL-DARI, Harith; a.k.a. AL-DAURI, Hareth; a.k.a. AL-DHARI, Harith; a.k.a. AL-DHARI, Harith S.; a.k.a. AL-DURI, Harith; a.k.a. DARI AL-ZAWBA'I, Harith), Akashat, Iraq; Abu Ghuraib, Iraq; Egypt; Qatar; Jordan; DOB 1941; POB Baghdad, Iraq; citizen Iraq; nationality Iraq; Passport N348171/IRAQ (Iraq) (individual) [IRAQ3]

AL-DIBISKI, Nur Al-Din (a.k.a. AL-DABASKI, Salim Nur al-Din; a.k.a. AL-DABSKI, Salem Nor Eldin Amohamed; a.k.a. AL-DABSKI, Salim Nur al-Din; a.k.a. RAGAB, Abdullah; a.k.a. RAJAB, Abdallah; a.k.a. ''AL-WARD, 'Abd''; a.k.a. ''AL-WARD, Abu''; a.k.a. ''AL-WARUD, Abu''; a.k.a. ''NAIM, Abu''); DOB circa 1963; POB Tripoli, Libya; Passport 1990/345751 (Libya) (individual) [SDGT]

AL-DULAIMI, Khalaf (a.k.a. AL-DULAYMI, Khalaf M.M.); DOB 25 Jan 1932; Passport #H0044232 (Iraq) (individual) [IRAQ2]

AL-DULAYMI, Hasan Hashim Khalaf (a.k.a. ''ABU WISSAM''), 30th Street, Al-Yarmuk Area, Jadat Al-Jaysh District, Damascus, Syria; House #43, Lane #17, Subdivision #808, Al-Dawrah, Baghdad, Iraq; DOB 1942; POB Baghdad, Iraq; nationality Iraq (individual) [IRAQ2]

AL-DULAYMI, Latif Nusayyif Jasim; DOB circa 1941; POB Ar-Rashidiya suburb of Baghdad, Iraq; nationality Iraq; Former Ba'th party military bureau deputy chairman (individual) [IRAQ2]

AL-DURI, Izzat Ibrahim (a.k.a. ABU AHMAD; a.k.a. ABU BRAYS); DOB circa 1942; POB al-Dur, Iraq; nationality Iraq; Former deputy commander-in-chief of Iraqi military; deputy secretary, Former Ba'th party regional command; Former vice chairman, Revolutionary Command Council (individual) [IRAQ2]

AL-DURI, Jawhar Majid, Iraq; DOB circa 1942; POB Al-Dur, Iraq; nationality Iraq; wife of Izzat Ibrahim Al-Duri (individual) [IRAQ2]

AL-DURI, Thabet, Rukan al-Din, Syria; Karkh District, Baghdad, Iraq; DOB 1943; alt. DOB 1944; POB Dur, Iraq (individual) [IRAQ2]

ALEGRIA DE PIO (vessel) [CUBA]

ALERO S.A., Carrera 7 No. 34–341 Bodega 3, Cali, Colombia; NIT # 800239872–5 (Colombia) [SDNT]

ALFA COMPANY LIMITED FOR INTERNATIONAL TRADING AND MARKETING (a.k.a. ALFA INVESTMENT AND INTERNATIONAL TRADING COMPANY; a.k.a. ALFA TRADING COMPANY), P.O. Box 910606, Amman 11191, Jordan [IRAQ2]

ALFA PHARMA S.A., Diagonal 17 No. 28A–80, Bogota, Colombia [SDNT]

AL-FADHLI, Muhsin (a.k.a. ABU MAJID SAMIYAH; a.k.a. ABU SAMIA; a.k.a. AL-FADHLI, Muhsin Fadhil 'Ayyid; a.k.a. AL-FADHLI, Muhsin Fadil Ayid Ashur), Block Four, Street 13, House # 179, Kuwait City, Al-Riqqa area, Kuwait; DOB 24 Apr 1981; Passport 106261543 (Kuwait) (individual) [SDGT]

AL-FAQIH, Abd al-Rahman (a.k.a. ALBASHIR, Mohammed; a.k.a. AL-BASHIR, Muhammad; a.k.a. AL-FAQI, Bashir Mohammed Ibrahim; a.k.a. AL-KHATAB, Abd Al Rahman; a.k.a. ISMAIL, Mohammed; a.k.a. MOHAMMED, Al-Basher; a.k.a. ''ABU ABD AL-RAHMAN''; a.k.a. ''ABU KHALID''; a.k.a. ''ABU MOHAMMED''; a.k.a. ''MAHMUD''; a.k.a. ''MUSTAFA''), Birmingham, United Kingdom; DOB 15 Dec 1959; POB Libya (individual) [SDGT]

AL-FAQIH, Saad Rashed Mohammad (a.k.a. ABU UTHMAN; a.k.a. AL FAQIH, Saad; a.k.a. AL-FAGEAH, Sa'd Rashid Muhammed; a.k.a. ALFAGIH, Saad; a.k.a. AL-FAGIH, Saad; a.k.a. AL-FAKIH, Saad; a.k.a. AL-FAQI, Sa'd; a.k.a. AL-FAQIH, Saad; a.k.a. AL-FAQIH, Sa'ad; a.k.a. AL-FAQIH, Sa'd), London, United Kingdom; DOB 1 Feb 1957; alt. DOB 31 Jan 1957; POB Zubair, Iraq; citizen Saudi Arabia; Passport 760620 issued 15 Sep 1991 expires 22 Jul 1996; Doctor (individual) [SDGT]

ALFARACHEM COMPANY LIMITED (a.k.a. AL PHARAKIM; a.k.a. ALFARACHEM PHARMACEUTICALS INDUSTRIES LIMITED; a.k.a. ALFARAKIM), 27 Al Amarat Street, Khartoum, Sudan [SUDAN]

AL-FAWAZ, Khalid Abd al-Rahman Hamd (a.k.a. AL FAWAZ, Khalid Abdulrahman H.; a.k.a. AL FAWWAZ, Khaled; a.k.a. AL FAWWAZ, Khalid; a.k.a. AL-FAUWAZ, Khaled; a.k.a. AL-FAUWAZ, Khaled A.; a.k.a. AL-FAWWAZ, Khaled; a.k.a. AL-FAWWAZ, Khalid), 55 Hawarden Hill, Brooke Road, London NW2 7BR, United Kingdom; DOB 25 Aug 1962; alt. DOB 24 Aug 1962; POB Kuwait; nationality Saudi Arabia; Passport 456682 issued 6 Nov 1990 expires 13 Sep 1995 (individual) [SDGT]

ALFONSO BARRERA RIOS Y CIA. S. EN C.S., Calle 14 Oeste No. 2B1–45 apto. 302E, Cali, Colombia; NIT # 900101150–5 (Colombia) [SDNT]

AL-GHOZI, Fathur Rohman (a.k.a. AL GHOZI, Fathur Rahman; a.k.a. AL GHOZI, Fathur Rohman; a.k.a. ALGHOZI, Fathur Rahman; a.k.a. AL-GHOZI, Fathur Rahman; a.k.a. ALGHOZI, Fathur Rohman; a.k.a. AL-GOZHI, Fathur Rahman; a.k.a. AL-GOZHI, Fathur Rohman; a.k.a. AL-GOZI, Fathur Rahman; a.k.a. AL-GOZI, Fathur Rohman; a.k.a. ALI, Randy; a.k.a. ALIH, Randy; a.k.a. ALIH, Randy Adam; a.k.a. AZAD, Rony; a.k.a. BIN AHAD, Rony Azad; a.k.a. BIN AHMAD, Rony Azad; a.k.a. BIN AMAD, Rony Azad; a.k.a. EDRIS, Anwar Rodin; a.k.a. JAMIL, Sammy Sali; a.k.a. JAMIL, Sammy Salih; a.k.a. RANDY, Alih; a.k.a. ''ABU SA'AD''; a.k.a. ''ABU SAAD''; a.k.a. ''FREEDOM FIGHTER''); DOB 17 Feb 1971; POB Madiun, East Java, Indonesia; nationality Indonesia; Passport GG 672613 (Philippines) (individual) [SDGT]

ALGUADIS, Selim; DOB 27 May 1944; POB Turkey; nationality Turkey; Passport 585843 (Turkey) issued 11 Nov 1999 (individual) [NPWMD]

AL-HABOBI, Dr. Safa Haji J (a.k.a. AL-HABOBI, Dr. Safa; a.k.a. AL-HABUBI, Dr. Safa Hadi Jawad; a.k.a. HABUBI, Dr. Safa Hadi Jawad; a.k.a. HABUBI, Dr. Safa Jawad; a.k.a. JAWAD, Dr. Safa Hadi), Iraq; Flat 4D Thorney Court, Palace Gate, Kensington, United Kingdom; DOB 01 Jul 1946; Former Minister of Oil (individual) [IRAQ2]

AL-HAMATI SWEETS BAKERIES, Al-Mukallah, Hadhramawt Governorate, Yemen [SDGT]

AL-HAMATI, Muhammad (a.k.a. AL-AHDAL, Mohammad Hamdi Sadiq; a.k.a. AL-MAKKI, Abu Asim), Yemen (individual) [SDGT]

AL-HAMMADI, Hamid Yusif (a.k.a. HAMADI, Hamed Yussef), Iraq; Former Minister of Culture and Information (individual) [IRAQ2]

AL-HAQ, Amin (a.k.a. AH HAQ, Dr. Amin; a.k.a. AMIN, Muhammad; a.k.a. UL-HAQ, Dr. Amin); DOB 1960; POB Nangahar Province, Afghanistan (individual) [SDGT]

AL-HARAMAIN & AL MASJED AL-AQSA CHARITY FOUNDATION: BOSNIA BRANCH (a.k.a. AL HARAMAIN AL MASJED AL AQSA; a.k.a. AL HARAMAYN AL MASJID AL AQSA; a.k.a. AL-HARAMAYN AND AL MASJID AL AQSA CHARITABLE FOUNDATION), Hasiba Brankovica No. 2A, Sarajevo, Bosnia and Herzegovina [SDGT]

AL-HARAMAIN: AFGHANISTAN BRANCH, Afghanistan [SDGT]

AL-HARAMAIN: ALBANIA BRANCH, Ifran Tomini street, #58, Tirana, Albania [SDGT]
AL-HARAMAIN: BANGLADESH BRANCH, House 1, Road 1, S–6, Uttara, Dhaka, Bangladesh [SDGT]
AL-HARAMAIN: ETHIOPIA BRANCH, Woreda District 24 Kebele Section 13, Addis Ababa, Ethiopia [SDGT]
AL-HARAMAIN: INDONESIA BRANCH (a.k.a. AL HARAMAIN; a.k.a. AL-HARAMAIN FOUNDATION; a.k.a. YAYASAN AL HARAMAIN; a.k.a. YAYASAN AL HARAMAINI; a.k.a. YAYASAN AL-MANAHIL-INDONESIA), Jalan Laut Sulawesi Blok DII/4, Kavling Angkatan Laut Duren Sawit, Jakarta Timur 13440, Indonesia [SDGT]
AL-HARAMAIN: KENYA BRANCH (a.k.a. ALHARAMAIN; a.k.a. ALHARAMAIN FOUNDATION; a.k.a. AL-HARAMAIN FOUNDATION; a.k.a. ALHARAMAIN HUMANITARIAN FOUNDATION; a.k.a. AL-HARAMAIN HUMANITARIAN FOUNDATION; a.k.a. ALHARAMAIN ISLAMIC FOUNDATION; a.k.a. AL-HARAMAIN ISLAMIC FOUNDATION; a.k.a. ALHARAMAYN; a.k.a. AL-HARAMAYN; a.k.a. ALHARAMAYN FOUNDATION; a.k.a. AL-HARAMAYN FOUNDATION; a.k.a. ALHARAMAYN HUMANITARIAN FOUNDATION; a.k.a. AL-HARAMAYN HUMANITARIAN FOUNDATION; a.k.a. ALHARAMAYN ISLAMIC FOUNDATION; a.k.a. AL-HARAMAYN ISLAMIC FOUNDATION; a.k.a. ALHARAMEIN; a.k.a. AL-HARAMEIN; a.k.a. ALHARAMEIN FOUNDATION; a.k.a. AL-HARAMEIN FOUNDATION; a.k.a. ALHARAMEIN HUMANITARIAN FOUNDATION; a.k.a. AL-HARAMEIN HUMANITARIAN FOUNDATION; a.k.a. ALHARAMEIN ISLAMIC FOUNDATION; a.k.a. AL-HARAMEIN ISLAMIC FOUNDATION; a.k.a. MU'ASSASAT AL-HARAMAIN AL-KHAYRIYYA; a.k.a. MU'ASSASAT AL-HARAMAYN AL-KHAYRIYYA; a.k.a. MU'ASSASAT AL-HARAMEIN AL-KHAYRIYYA; a.k.a. VAZIR; a.k.a. VEZIR), Daddb, Kenya; Garissa, Kenya; Nairobi, Kenya [SDGT]
AL-HARAMAIN: PAKISTAN BRANCH (a.k.a. ALHARAMAIN; a.k.a. ALHARAMAIN FOUNDATION; a.k.a. AL-HARAMAIN FOUNDATION; a.k.a. ALHARAMAIN HUMANITARIAN FOUNDATION; a.k.a. AL-HARAMAIN HUMANITARIAN FOUNDATION; a.k.a. ALHARAMAIN ISLAMIC FOUNDATION; a.k.a. AL-HARAMAIN ISLAMIC FOUNDATION; a.k.a. ALHARAMAYN; a.k.a. AL-HARAMAYN; a.k.a. ALHARAMAYN FOUNDATION; a.k.a. AL-HARAMAYN FOUNDATION; a.k.a. ALHARAMAYN HUMANITARIAN FOUNDATION; a.k.a. AL-HARAMAYN HUMANITARIAN FOUNDATION; a.k.a. ALHARAMAYN ISLAMIC FOUNDATION; a.k.a. AL-HARAMAYN ISLAMIC FOUNDATION; a.k.a. ALHARAMEIN; a.k.a. AL-HARAMEIN; a.k.a. ALHARAMEIN FOUNDATION; a.k.a. AL-HARAMEIN FOUNDATION; a.k.a. ALHARAMEIN HUMANITARIAN FOUNDATION; a.k.a. AL-HARAMEIN HUMANITARIAN FOUNDATION; a.k.a. ALHARAMEIN ISLAMIC FOUNDATION; a.k.a. AL-HARAMEIN ISLAMIC FOUNDATION; a.k.a. AL-HARAMEIN ISLAMIC FOUNDATION; a.k.a. MU'ASSASAT AL-HARAMAIN AL-KHAYRIYYA; a.k.a. MU'ASSASAT AL-HARAMAYN AL-KHAYRIYYA; a.k.a. MU'ASSASAT AL-HARAMEIN AL-KHAYRIYYA; a.k.a. VAZIR; a.k.a. VEZIR), House #279, Nazimuddin road, F–10/1, Islamabad, Pakistan [SDGT]
AL-HARAMAIN: TANZANIA BRANCH (a.k.a. ALHARAMAIN; a.k.a. ALHARAMAIN FOUNDATION; a.k.a. AL-HARAMAIN FOUNDATION; a.k.a. ALHARAMAIN HUMANITARIAN FOUNDATION; a.k.a. AL-HARAMAIN HUMANITARIAN FOUNDATION; a.k.a. ALHARAMAIN ISLAMIC FOUNDATION; a.k.a. AL-HARAMAIN ISLAMIC FOUNDATION; a.k.a. ALHARAMAYN; a.k.a. AL-HARAMAYN; a.k.a. ALHARAMAYN FOUNDATION; a.k.a. AL-HARAMAYN FOUNDATION; a.k.a. ALHARAMAYN HUMANITARIAN FOUNDATION; a.k.a. AL-HARAMAYN HUMANITARIAN FOUNDATION; a.k.a. ALHARAMAYN ISLAMIC FOUNDATION; a.k.a. AL-HARAMAYN ISLAMIC FOUNDATION; a.k.a. ALHARAMEIN; a.k.a. AL-HARAMEIN; a.k.a. ALHARAMEIN FOUNDATION; a.k.a. AL-HARAMEIN FOUNDATION; a.k.a. ALHARAMEIN HUMANITARIAN FOUNDATION; a.k.a. AL-HARAMEIN HUMANITARIAN FOUNDATION; a.k.a. ALHARAMEIN ISLAMIC FOUNDATION; a.k.a. AL-HARAMEIN ISLAMIC FOUNDATION; a.k.a. MU'ASSASAT AL-HARAMAIN AL-KHAYRIYYA; a.k.a. MU'ASSASAT AL-HARAMAYN AL-KHAYRIYYA; a.k.a. MU'ASSASAT AL-HARAMEIN AL-KHAYRIYYA; a.k.a. VAZIR; a.k.a. VEZIR); Singida, Tanzania; PO Box 3616, Dar es Salaam, Tanzania; Tanga, Tanzania [SDGT]
AL-HARAMAIN: THE NETHERLANDS BRANCH (a.k.a. STICHTING AL HARAMAIN HUMANITARIAN AID), Jan Hanzenstraat 114, 1053SV, Amsterdam, Netherlands [SDGT]
AL-HARAMAIN: UNITED STATES BRANCH (a.k.a. AL HARAMAIN FOUNDATION, INC.; a.k.a. ALHARAMAIN; a.k.a. ALHARAMAIN FOUNDATION; a.k.a. AL-HARAMAIN FOUNDATION; a.k.a. ALHARAMAIN HUMANITARIAN FOUNDATION; a.k.a. AL-HARAMAIN HUMANITARIAN FOUNDATION; a.k.a. ALHARAMAIN ISLAMIC FOUNDATION; a.k.a. AL-HARAMAIN ISLAMIC FOUNDATION; a.k.a. ALHARAMAYN; a.k.a. AL-HARAMAYN; a.k.a. ALHARAMAYN FOUNDATION; a.k.a. AL-HARAMAYN FOUNDATION; a.k.a. ALHARAMAYN HUMANITARIAN FOUNDATION; a.k.a. AL-HARAMAYN HUMANITARIAN FOUNDATION; a.k.a. ALHARAMAYN ISLAMIC FOUNDATION; a.k.a. AL-HARAMAYN ISLAMIC FOUNDATION; a.k.a. ALHARAMEIN; a.k.a. AL-HARAMEIN; a.k.a. ALHARAMEIN FOUNDATION; a.k.a. AL-HARAMEIN FOUNDATION; a.k.a. ALHARAMEIN HUMANITARIAN FOUNDATION; a.k.a. AL-HARAMEIN HUMANITARIAN FOUNDATION; a.k.a. ALHARAMEIN ISLAMIC FOUNDATION; a.k.a. AL-HARAMEIN ISLAMIC FOUNDATION; a.k.a. MU'ASSASAT AL-HARAMAIN AL-KHAYRIYYA; a.k.a. MU'ASSASAT AL-HARAMAYN AL-KHAYRIYYA; a.k.a. MU'ASSASAT AL-HARAMEIN AL-KHAYRIYYA; a.k.a. VAZIR; a.k.a. VEZIR), 3800 Highway 99 S., Ashland, OR 97520–8718; 2151 E. Division St., Springfield, MO 65803; 1257 Siskiyou BLVD, Ashland, OR 97520 [SDGT]
AL-HARAMAIN FOUNDATION: COMOROS ISLANDS, B/P: 1652, Moroni, Comoros [SDGT]
AL-HARAMAIN ISLAMIC FOUNDATION (a.k.a. ALHARAMAIN; a.k.a. AL-HARAMAIN; a.k.a. ALHARAMAIN FOUNDATION; a.k.a. AL-HARAMAIN FOUNDATION; a.k.a. ALHARAMAIN HUMANITARIAN FOUNDATION; a.k.a. AL-HARAMAIN HUMANITARIAN FOUNDATION; a.k.a. ALHARAMAIN ISLAMIC FOUNDATION; a.k.a. ALHARAMAYN; a.k.a. AL-HARAMAYN; a.k.a. ALHARAMAYN FOUNDATION; a.k.a. AL-HARAMAYN FOUNDATION; a.k.a. ALHARAMAYN HUMANITARIAN FOUNDATION; a.k.a. AL-HARAMAYN HUMANITARIAN FOUNDATION; a.k.a. ALHARAMAYN ISLAMIC FOUNDATION; a.k.a. AL-HARAMAYN ISLAMIC FOUNDATION; a.k.a. ALHARAMEIN; a.k.a. AL-HARAMEIN; a.k.a. ALHARAMEIN FOUNDATION; a.k.a. AL-HARAMEIN FOUNDATION; a.k.a. ALHARAMEIN HUMANITARIAN FOUNDATION; a.k.a. AL-HARAMEIN HUMANITARIAN FOUNDATION; a.k.a. ALHARAMEIN ISLAMIC FOUNDATION; a.k.a. AL-HARAMEIN ISLAMIC FOUNDATION; a.k.a. MU'ASSASAT AL-HARAMAIN AL-KHAYRIYYA; a.k.a. MU'ASSASAT AL-HARAMAYN AL-KHAYRIYYA; a.k.a. MU'ASSASAT AL-HARAMEIN AL-KHAYRIYYA; a.k.a. VAZIR; a.k.a. VEZIR), 64 Poturmahala, Travnik, Bosnia and Herzegovina; Somalia [SDGT]
AL-HARAMAIN ISLAMIC FOUNDATION, West Al-M'ather Street, Riyadh, Saudi Arabia; P.O. Box 69606, Riyadh 11557, Saudi Arabia; all offices worldwide [SDGT]
AL-HASSAN, Anas Malik Dohan (a.k.a. AL-HASSAN, Anas; a.k.a. DOHAN, Anas; a.k.a. DOHAN, Anas Malik; a.k.a. MALIK, Anas), Baghdad, Iraq (individual) [IRAQ2]
AL-HASSAN, Anas Malik Dohan (a.k.a. AL-HASSAN, Anas; a.k.a. DOHAN, Anas; a.k.a. DOHAN, Anas Malik; a.k.a. MALIK, Anas), Jordan (individual) [IRAQ2]
AL-HIYARI, Bilal Mansur (a.k.a. AL-KHAYARI, Bilal Mansur Mahmud), Suwaylah, Jordan; DOB circa 1969; POB al-Salt, Jordan; nationality Jordan (individual) [SDGT]
AL-HUDA STATE COMPANY FOR RELIGIOUS TOURISM (a.k.a. AL-HODA FOR RELIGIOUS TOURISM COMPANY; a.k.a. AL-HODA STATE COMPANY FOR RELIGIOUS TOURISM; a.k.a. AL-HUDA FOR RELIGIOUS TOURISM COMPANY), Iraq [IRAQ2]
AL-HUWAYSH, Isam Rashid, Iraq; Former Governor of the Central Bank (individual) [IRAQ2]
ALI, Abbas Abdi, Mogadishu, Somalia (individual) [SDGT]

ALI, Ahmed Mohammed Hamed (a.k.a. ABDUREHMAN, Ahmed Mohammed; a.k.a. ABU FATIMA; a.k.a. ABU ISLAM; a.k.a. ABU KHADIIJAH; a.k.a. AHMED HAMED; a.k.a. AHMED THE EGYPTIAN; a.k.a. AHMED, Ahmed; a.k.a. ALI, Ahmed Mohammed; a.k.a. ALI, Hamed; a.k.a. AL-MASRI, Ahmad; a.k.a. AL-SURIR, Abu Islam; a.k.a. HEMED, Ahmed; a.k.a. SHIEB, Ahmed; a.k.a. SHUAIB), Afghanistan; DOB 1965; POB Egypt; citizen Egypt (individual) [SDGT]

ALI, Ali Abdul Mutalib, Germany (individual) [IRAQ2]

ALIQ, Qasim (a.k.a. ALEIK, Kassem; a.k.a. 'ALIQ, Hajj Qasim; a.k.a. 'ALIQ, Qasem; a.k.a. 'ULAYQ, Qasim); DOB 1956; POB Lebanon (individual) [SDGT]

AL-IRAQI, Abd al-Hadi (a.k.a. ABU ABDALLAH; a.k.a. AL-IRAQI, Abdal al-Hadi) (individual) [SDGT]

AL-ISLAMBULI, Muhammad Ahmad Shawqi; DOB 21 Jan 1952; POB Minya, Egypt; nationality Egypt (individual) [SDGT]

ALISPAHIC, Bakir; DOB 1 Oct 1956; POB Ahatovici, Bosnia-Herzegovina (individual) [BALKANS]

AL-ITIHAAD AL-ISLAMIYA (a.k.a. AIAI) [SDGT]

ALIZAI, Haji Azizullah (a.k.a. AZIZULLAH, Haji), Yatim Chah, Afghanistan; Kabul, Afghanistan; Musa Qala District, Helmund Province, Afghanistan; Musa Qaleh District, Helmand Province, Afghanistan; Lashkar Gah, Helmand Province, Afghanistan; DOB 1950; alt. DOB 1952; POB Gereshk District, Helmund Province, Afghanistan; alt. POB Kabul City, Afghanistan; citizen Afghanistan; Electoral Registry No. 07385114 (Afghanistan) (individual) [SDNTK]

AL-JABBURI, Sadi Tuma Abbas, Iraq; DOB 1939; Former Adviser to the President for Military Affairs (individual) [IRAQ2]

AL-JABURI, Mish'an Rakin Thamin (a.k.a. AL JABBURY, Mashaan Rakadh Dhamin; a.k.a. AL JABOURI, Meshan Thamin; a.k.a. AL JABOURI, Mishan Riqardh Damin; a.k.a. AL JABURI, Misham; a.k.a. AL-JABBURI, Mishan; a.k.a. AL-JABBURI, Mish'an Rakkad Damin; a.k.a. ALJABOURI, Mashaan; a.k.a. AL-JABOURI, Mishan; a.k.a. AL-JABURI, Mushan; a.k.a. AL-JIBURI, Mush'an; a.k.a. AL-JUBOURI, Mishaan; a.k.a. AL-JUBURI, Meshaan; a.k.a. AL-JUBURI, Mish'an; a.k.a. EL-JBURI, Mash'an; a.k.a. JABOURI, Mashaan; a.k.a. JIBOURI, Mishan; a.k.a. JUBURI, Mashan), Latakia, Syria; Damascus, Syria; DOB 1 Aug 1957; POB Ninwa, Iraq; citizen Syria; nationality Iraq; Passport 01374026 (individual) [IRAQ3]

AL-JALAMAH, Jaber (a.k.a. AL-JALAHMA, Jaber; a.k.a. AL-JALAHMAH, Abu Muhammad; a.k.a. AL-JALAHMAH, Jabir Abdallah Jabir Ahmad; a.k.a. AL-JALAMAH, Jabir 'Abdallah Jabir Ahmad; a.k.a. AL-JALHAMI, Jabir; a.k.a. "'ABDUL-GHANI"; a.k.a. "ABU MUHAMMAD"); DOB 24 Sep 1959; nationality Kuwait; Passport 101423404 (individual) [SDGT]

AL-JANABI, Nabil Abdullah, Beirut, Lebanon; DOB 14 Aug 1942; POB Baghdad, Iraq; Passport H101901/1 (Iraq) (individual) [IRAQ2]

AL-JAZIRI, Abu Bakr, Peshawar, Pakistan; nationality Algeria (individual) [SDGT]

AL-JIHAD (a.k.a. EGYPTIAN AL-JIHAD; a.k.a. EGYPTIAN ISLAMIC JIHAD; a.k.a. JIHAD GROUP; a.k.a. NEW JIHAD) [SDT] [FTO] [SDGT]

AL-JIZRAWI, Taha Yassin Ramadan (a.k.a. RAMADAN, Taha Yasin; a.k.a. RAMADAN, Taha Yassin); DOB circa 1938; nationality Iraq; Former Vice President (individual) [IRAQ2]

AL-KABI, Arkam 'Abbas (a.k.a. AL-KA'ABI, Shaykh Abu-Akram; a.k.a. AL-KA'ABI, Sheik Akram; a.k.a. AL-KA'BI, Akram Abas; a.k.a. "ABU-MUHAMMAD"; a.k.a. "'ALI, Abu"; a.k.a. "KARUMI"); DOB circa 1976; alt. DOB circa 1973; POB al 'Amarah, Iraq; alt. POB al Kalamiy, Iraq; nationality Iraq (individual) [IRAQ3]

AL-KADR, Ahmad Sa'id (a.k.a. AL-KANADI, Abu Abd Al-Rahman); DOB 01 Mar 1948; POB Cairo, Egypt (individual) [SDGT]

ALKALA ASOCIADOS S.A. (f.k.a. INVHERESA S.A.), Calle 1A No. 62A–120, Cali, Colombia; Calle 70N No. 14–31, Cali, Colombia; Calle 1A No. 62A-130, Cali, Colombia; Avenida 2N No. 7N–55 of. 501, Cali, Colombia; NIT # 800108121–0 (Colombia) [SDNT]

AL-KHAFAJI, Muhsin Khadr; nationality Iraq; Former Ba'th party regional command chairman, al-Qadisiyah (individual) [IRAQ2]

AL-KHAFAJI, Sabah, 254 Rue Adolphe Pajeaud, 92160 Antony, France (individual) [IRAQ2]

AL-KHASHIBAN, Fahd Muhammad 'Abd Al-'Aziz (a.k.a. AL-KHASHAYBAN, Fahd Muhammad 'Abd Al-'Aziz; a.k.a. AL-KHASHIBAN, Fahad; a.k.a. AL-KHASHIBAN, Fahad H.A.; a.k.a. AL-KHOSHIBAN, Fahad Mohammad A.; a.k.a. AL-KHOSHIBAN, Fahad Muhammad A.; a.k.a. AL-KHOSIBAN, Fahad H.A.; a.k.a. AL-KHUSHAYBAN, Fahd Muhammad 'Abd al-'Aziz; a.k.a. KHASHAYBAN, Fahad H.A.; a.k.a. KHASIBAN, Fahad H.A.; a.k.a. KHESHAIBAN, Fahad H.A.; a.k.a. KHESHAYBAN, Fahad H.A.; a.k.a. KHUSHAIBAN, Fahd; a.k.a. "RAHMAN, Abdur Abu"; a.k.a. "RAHMAN, Abu Abdur"; a.k.a. "THABET, Shaykh"; a.k.a. "THABIT, Abu"; a.k.a. "THABIT, Shaykh Abu"); DOB 16 Oct 1966; POB 'Aniza, Saudi Arabia; nationality Saudi Arabia (individual) [SDGT]

AL-KHODAIR, Ahmad Hussein (a.k.a. SAMARRAI, Ahmad Husayn Khudayir); DOB 1941; Former Minister of Finance, Iraq (individual) [IRAQ2]

AL-KUBAYSI, Ugla Abid Saqar (a.k.a. SAQR AL-KABISI ABD AQALA); DOB 1944; POB Kubaisi, al-Anbar Governorate, Iraq; nationality Iraq; Former Ba'th party regional command chairman, Maysan (individual) [IRAQ2]

AL-KURD, Ahmad Harb (a.k.a. AL KURD, Ahmed; a.k.a. AL-KARD, Ahmad; a.k.a. AL-KIRD, Ahmad; a.k.a. ALKURD, Ahmad; a.k.a. AL-KURD, Ahmed Hard; a.k.a. EL-KURD, Ahmed), Deir Al-Balah, Gaza, Palestinian; DOB circa 1949; alt. DOB circa 1951; POB Deir Al-Balah, Gaza (individual) [SDGT]

ALLAN GRANGE FARM, Chegutu, Zimbabwe [ZIMBABWE]

ALLANE, Hacene (a.k.a. ABDELHAY, al-Sheikh; a.k.a. AHCENE, Cheib; a.k.a. "ABU AL-FOUTOUH"; a.k.a. "BOULAHIA"; a.k.a. "HASSAN THE OLD"); DOB 17 Jan 1941; POB El Menea, Algeria (individual) [SDGT]

ALLEN, Cyril; DOB 26 Jul 1952; Former Chairman, National Patriotic Party of Liberia; nationality Liberia; alt. nationality Nigerian (individual) [LIBERIA]

AL-LIBI, Abd al-Muhsin (a.k.a. ABU BAKR, Ibrahim Ali Muhammad; a.k.a. SABRI, Abdel Ilah; a.k.a. TANTOUCHE, Ibrahim Abubaker; a.k.a. TANTOUSH, Ibrahim Abubaker; a.k.a. TANTOUSH, Ibrahim Ali Abu Bakr; a.k.a. "'ABD AL-MUHSI"; a.k.a. "'ABD AL-RAHMAN"; a.k.a. "ABU ANAS"); DOB 1966; alt. DOB 27 Oct 1969; nationality Libya; Passport 203037 (Libya) (individual) [SDGT]

AL-LIBI, Ibn Al-Shaykh (individual) [SDGT]

AL-LIBY, Anas (a.k.a. AL-LIBI, Anas; a.k.a. AL-RAGHIE, Nazih; a.k.a. AL-RAGHIE, Nazih Abdul Hamed; a.k.a. AL-SABAI, Anas), Afghanistan; DOB 30 Mar 1964; alt. DOB 14 May 1964; POB Tripoli, Libya; citizen Libya (individual) [SDGT]

ALM INVESTMENT FLORIDA, INC., 780 NW 42nd Avenue, Suite 516, Miami, FL 33126; 9100 South Dadeland Boulevard, Suite 912, Miami, FL 33156; 780 NW Le Jeune Rd, Suite 516, Miami, FL 33126; US FEIN 65–0336852 (United States) [SDNT]

ALMACAES S.A., Avenida 15 No. 123–30, Local 1–13, Bogota, Colombia; Carrera 65 No. 71–74, Barranquilla, Colombia; Diagonal 127 No. 17–34 Piso 2, Bogota, Colombia; NIT # 830086515–1 (Colombia) [SDNT]

ALMACEN Y COMPRAVENTA LOS 3 OROS, Carrera 7 No. 11–60, Cartago, Valle, Colombia; NIT # 16219873–3 (Colombia) [SDNT]

AL-MAJID, Hussein Kamel Hassan (a.k.a. AL-MAJID, Husayn Kamil Hasan), Baghdad, Iraq; DOB 1955; Former Minister of Industry and Minerals and Advisor to the President (individual) [IRAQ2]

AL-MALIKI, Shabib Lazem (a.k.a. AL-MALEKI, Shebib Lazim), Iraq; DOB 1936; Former Minister of Justice (individual) [IRAQ2]

ALMANZA BARRAZA, Alfonso Rafael, c/o LITOPHARMA, Barranquilla, Colombia; Carrera 35 No. 43–62, Barranquilla, Colombia; c/o CAJA SOLIDARIA, Bogota, Colombia; c/o COPSERVIR LTDA., Bogota, Colombia; Cedula No. 72206138 (Colombia) (individual) [SDNT]

AL-MARSUMI, Saddah Jaylut (a.k.a. AL-MARSUMI, Sa'da Jalut Hassam; a.k.a. JALOUD, Sa'daa; a.k.a. JALOUT, Saddaa), Al Shajlah Village, Syria; Baghuz, Syria; As Susah Village, Syria; DOB 1955; alt. DOB 1956; citizen Syria (individual) [SDGT]

AL-MASHHADANI, Saif-al-Din; DOB 1956; POB Baghdad, Iraq; nationality Iraq; Ba'th party regional command chairman, al-Muthanna (individual) [IRAQ2]

AL-MASRI, Abu Hafs (a.k.a. ABDULLAH, Sheikh Taysir; a.k.a. ABU HAFS; a.k.a. ABU SITTA, Subhi; a.k.a. ATEF, Muhammad; a.k.a. ATIF, Mohamed; a.k.a. ATIF, Muhammad; a.k.a. EL KHABIR, Abu Hafs el Masry; a.k.a. TAYSIR); DOB 1951; alt. DOB 1944; alt. DOB 1956; POB

Alexandria, Egypt (individual) [SDT] [SDGT]

AL-MASRI, Abu Hamza (a.k.a. AL-MISRI, Abu Hamza; a.k.a. EMAN, Adam Ramsey; a.k.a. KAMEL, Mustafa; a.k.a. MUSTAFA, Mustafa Kamel), 8 Adie Road, Hammersmith, London W6 OPW, United Kingdom; 9 Albourne Road, Shepherds Bush, London W12 OLW, United Kingdom; DOB 15 Apr 1958 (individual) [SDGT]

AL-MUGHASSIL, Ahmad Ibrahim (a.k.a. ABU OMRAN; a.k.a. AL-MUGHASSIL, Ahmed Ibrahim); DOB 26 Jun 1967; POB Qatif-Bab al Shamal, Saudi Arabia; citizen Saudi Arabia (individual) [SDGT]

AL-MUHAMMAD, Khamis Sirhan (a.k.a. DR. KHAMIS); nationality Iraq; Ba'th party regional command chairman, Karbala (individual) [IRAQ2]

AL-MUJIL, Abd Al Hamid Sulaiman Muhammed (a.k.a. AL MOJIL, Abdulhamid Sulaiman M.; a.k.a. AL MUJAL, Dr. Abd al-Hamid; a.k.a. AL MU'JIL, Abd al-Hamid Sulaiman; a.k.a. AL-MU'AJJAL, Dr. Abd Al-Hamid; a.k.a. AL-MU'JIL, Dr. Abd Abdul-Hamid bin Sulaiman; a.k.a. MUJEL, A.S.; a.k.a. MU'JIL, Abd al-Hamid; a.k.a. ''ABDALLAH, Abu''); DOB 28 Apr 1949; alt. DOB 29 Apr 1949; POB Kuwait; citizen Saudi Arabia; nationality Saudi Arabia; Passport F 137998 issued 18 Apr 2004 expires 24 Feb 2009; Doctor (individual) [SDGT]

AL-NAJIM, Samir abd al-Aziz; DOB 1937; alt. DOB 1938; POB Baghdad, Iraq; nationality Iraq; Ba'th party regional command chairman, East Baghdad (individual) [IRAQ2]

AL-NAQIB, Zuhair Talib abd-al-Sattar; DOB circa 1948; nationality Iraq; Director, Military Intelligence (individual) [IRAQ2]

AL-NASSER, Abdelkarim Hussein Mohamed; POB Al Ihsa, Saudi Arabia; citizen Saudi Arabia (individual) [SDGT]

AL-NUMAN, Aziz Salih; DOB 1941; alt. DOB 1945; POB An Nasiriyah, Iraq; nationality Iraq; Ba'th party regional command chairman (individual) [IRAQ2]

AL-NUR HONEY PRESS SHOPS (a.k.a. AL-NUR HONEY CENTER), Sanaa, Yemen [SDGT]

ALOARDI, Carlo Giovanni, Milan, Italy (individual) [CUBA]

ALPHA INTERNATIONAL (PRIVATE) LTD (a.k.a. ALPHA INTERNATIONAL (PRIVATE) LIMITED), Flat 1, Aileen Gardens, 51A Park Road, Camberley, Surrey GU15 2SP, United Kingdom [ZIMBABWE]

AL-QADI, Yasin Abdullah Ezzedine (a.k.a. KADI, Shaykh Yassin Abdullah; a.k.a. KAHDI, Yasin), Jeddah, Saudi Arabia; DOB 23 Feb 1955; POB Cairo, Egypt; nationality Saudi Arabia; Passport B 751550; alt. Passport A 848526 (Saudi Arabia) expires 29 Mar 2001; alt. Passport E 976177 issued 6 Mar 2004 expires 11 Jan 2009 (individual) [SDGT]

AL-QARD AL-HASSAN ASSOCIATION (a.k.a. AL-QUARD AL-HASSAN ASSOCIATION; a.k.a. AL-QUARDH AL-HASSAN ASSOCIATION; a.k.a. KARADH AL-HASSAN), Beirut, Lebanon [SDGT]

AL-QASIR, Nazar Jumah Ali (a.k.a. AL-QASSIR, Nizar Jomaa Ali), Iraq; Former Minister of Irrigation (individual) [IRAQ2]

AL-QUBAYSI, Munir (a.k.a. AL-KUBAISI, Muneer; a.k.a. AL-KUBAYSI, Munir; a.k.a. AWAD, Munir A.; a.k.a. AWAD, Munir Mamduh), Syria; DOB 1966; POB Heet, Iraq; nationality Iraq (individual) [IRAQ2]

AL-RABI'I, Nidal, Iraq; DOB circa 1965; POB Al-Dur, Iraq; nationality Iraq; wife of Izzat Ibrahim Al-Duri (individual) [IRAQ2]

AL-RAWI, Ayad Futayyih Khalifa; DOB 1942; POB Rawah, Iraq; nationality Iraq; Quds Force Chief of Staff (individual) [IRAQ2]

AL-RAWI, Fawzi Mutlaq (a.k.a. AL-RAWI, Fawzi Isma'il Al-Husayni; a.k.a. ''ABU AKRAM''; a.k.a. ''ABU FIRAS''), SYRIAN BA'TH PARTY COMMAND BUILDING, AL-HALBUNI DISTRICT, DAMASCUS, Syria; SYRIAN GOVERNMENT-OWNED APARTMENT, AL-MAZZAH DISTRICT, DAMASCUS, Syria; DOB 1940; POB RAWAH CITY, IRAQ; citizen Syria; nationality Iraq; CHAIRMAN, IRAQI WING OF THE SYRIAN BA'TH PARTY (individual) [SDGT]

AL-RAWI, Saif-al-Din Fulayyih Hassan Taha (a.k.a. AL-RAWI, Ayad Futayyih); DOB 1953; POB Ar Ramadi, al-Anbar Governorate, Iraq; nationality Iraq; Republican Guard chief of staff (individual) [IRAQ2]

AL-RA'Y SATELLITE TELEVISION CHANNEL (a.k.a. AL RAIE TV CHANNEL; a.k.a. AL RA'Y SATELLITE TELEVISION STATION; a.k.a. AL RA'Y TV; a.k.a. AL-RA'I SATELLITE CHANNEL; a.k.a. AL-RA'Y SATELLITE CHANNEL; a.k.a. ARRAI TV; a.k.a. SATELLITE TELEVISION CHANNEL AL RA'Y; a.k.a. THE OPINION SATELLITE TELEVISION CHANNEL), Near Damascus in the Yaafur area, Syria; E-mail Address info@arrai.tv; Website www.arrai.tv [IRAQ3]

AL-RIDA, Karim Hasan (a.k.a. RIDA, Karim Hassan), Iraq; DOB 1944; Former Minister of Agriculture (individual) [IRAQ2]

AL-RUBA, Dr. Khadim, Iraq; Managing Director of REAL ESTATE BANK (individual) [IRAQ2]

AL-SA'DI, Amir Hamudi Hassan; DOB 5 Apr 1938; POB Baghdad, Iraq; nationality Iraq; Passport NO33301/862 issued 17 October 1997 expires 1 October 2005; alt. Passport M0003264580; alt. Passport H0100009 issued 1 May 2002; presidential scientific advisor (individual) [IRAQ2]

AL-SAD'UN, Abd-al-Baqi abd-al-Karim Abdallah; DOB 1947; nationality Iraq; Ba'th party regional command chairman, Diyala (individual) [IRAQ2]

AL-SA'DUN, Muhammad Zimam abd-al-Razzaq; DOB 1942; POB Suq ash-Shuyukh District, Dhi-Qar, Iraq; nationality Iraq; Ba'th party regional chairman, at-Tamim (individual) [IRAQ2]

AL-SAHHAF, Muhammad Said Kazim (a.k.a. AL-SAHAF, Mohammed Said), Iraq; DOB 1940; Former Minister of Foreign Affairs (individual) [IRAQ2]

AL-SALAH SOCIETY (a.k.a. AL-SALAH; a.k.a. AL-SALAH ASSOCIATION; a.k.a. AL-SALAH ISLAMIC ASSOCIATION; a.k.a. AL-SALAH ISLAMIC COMMITTEE; a.k.a. AL-SALAH ISLAMIC FOUNDATION; a.k.a. AL-SALAH ISLAMIC SOCIETY; a.k.a. AL-SALAH ORGANIZATION; a.k.a. ISLAMIC AL SALAH SOCIETY; a.k.a. ISLAMIC RIGHTEOUSNESS SOCIETY; a.k.a. ISLAMIC SALAH FOUNDATION; a.k.a. ISLAMIC SALAH SOCIETY; a.k.a. ISLAMIC SALVATION SOCIETY; a.k.a. JAMI'A AL-SALAH; a.k.a. JAMI'AT AL-SALAH AL-ISLAMI; a.k.a. JAMMEAT EL-SALAH; a.k.a. SALAH CHARITABLE ASSOCIATION; a.k.a. SALAH ISLAMIC ASSOCIATION; a.k.a. SALAH WELFARE ORGANIZATION), Bureij, Gaza, Palestinian; P.O. Box 6035, Beshara Street, Deir Al-Balah, Gaza, Palestinian; Athalatheeniy Street, Gaza, Palestinian; Deir Al-Balah Camp, Gaza, Palestinian; Rafah, Gaza, Palestinian; Al-Maghazi, Gaza, Palestinian; Gaza City, Gaza, Palestinian [SDGT]

AL-SALIH, Muhammad Mahdi (a.k.a. SALEH, Mohammed Mahdi); DOB 1947; alt. DOB 1949; POB al-Anbar Governorate, Iraq; nationality Iraq; Minister of Trade (individual) [IRAQ2]

AL-SAYYID, 'Ali Sulayman Mas'ud 'Abd (a.k.a. AL-JAWZIYYAH, Ibn al-Qayyim; a.k.a. OSMAN, Mohamed; a.k.a. SAYED, Aly Soliman Massoud Abdul; a.k.a. ''AL-QAYYIM, 'Ibn''; a.k.a. ''AL-ZAWL''; a.k.a. ''EL-QAIM, Ibn''); DOB 1969; POB Tripoli, Libya; Passport 96/184442 (Libya) (individual) [SDGT]

AL-SHABAAB (a.k.a. AL-SHABAAB AL-ISLAAM; a.k.a. AL-SHABAAB AL-ISLAMIYA; a.k.a. AL-SHABAAB AL-JIHAAD; a.k.a. AL-SHABAB; a.k.a. HARAKAT SHABAB AL-MUJAHIDIN; a.k.a. HISB'UL SHABAAB; a.k.a. HIZBUL SHABAAB; a.k.a. MUJAHIDEEN YOUTH MOVEMENT; a.k.a. MUJAHIDIN AL-SHABAAB MOVEMENT; a.k.a. MUJAHIDIN YOUTH MOVEMENT; a.k.a. ''MYM''; a.k.a. ''THE UNITY OF ISLAMIC YOUTH''; a.k.a. ''THE YOUTH''; a.k.a. ''YOUTH WING''), Somalia [FTO] [SDGT]

AL-SHAMI, Ahmad; DOB 1965; POB Beirut, Lebanon (individual) [SDGT]

AL-SHAMI, Husayn (a.k.a. AL-SHAMI, Haj Husayn; a.k.a. AL-SHAMY, Husayn; a.k.a. ASHAMI, Husayn; a.k.a. SHAIMI, Husayn; a.k.a. SHAMAI, Husayn; a.k.a. SHAMY, Husayn), Lebanon; DOB 1948; alt. DOB 1954; alt. DOB 1960 (individual) [SDGT]

AL-SHAMMARI, Sa'ad Uwayyid 'Ubayd Mu'jil (a.k.a. ABU HAMMUDI AL-SHAMMARI; a.k.a. ABU KHALAF; a.k.a. SA'AD AL-SHAMMARI; a.k.a. ''SAAD OWAIED OBAID''), 'Awinat Village, Rabi'ah District, Iraq; Tal Wardan, Iraq; Tal Hamis, Syria; DOB 3 Jul 1972; POB Tal Wardan, Ninevah, Iraq; alt. POB Tal Afar, Ninevah, Iraq (individual) [SDGT]

AL-SHANFARI, Thamer Bin Said Ahmed (a.k.a. AL SHANFARI, SHEIKH THAMER; a.k.a. AL SHANFARI, Thamer; a.k.a. AL SHANFARI, Thamer Said Ahmed; a.k.a. AL-SHANFARI, Thamer Bin Saeed; a.k.a. AL-SHANFARI, Thamer Said Ahmed; a.k.a. SHANFARI, Thamer), P.O. Box 18, Ruwi 112, Oman; DOB 3 Jan 1968; citizen Oman; nationality Oman; Passport 3253 (Oman); alt. Passport 00000999 (Oman); Chairman & Managing Director, Oryx Group and Oryx Natural Resources (individual) [ZIMBABWE]

AL-SHARIF, Sa'd Abdullah Hussein; DOB 1969; alt. DOB 1963; alt. DOB 11 Feb 1964; POB Al-Medinah, Saudi Arabia; nationality

Saudi Arabia; Passport B 960789; alt. Passport G 649385 issued 8 Sep 2006 expires 17 Jul 2011 (individual) [SDGT]

AL-SHEIBANI, Abu Mustafa (a.k.a. AL-ATTABI, Hameid Thajeil Wareij; a.k.a. AL-SHAYBANI, Abu Mustafa; a.k.a. AL-SHAYBANI, Hamid; a.k.a. AL-SHEBANI, Abu Mustafa; a.k.a. AL-SHEIBANI, Hamid Thajeel; a.k.a. AL-SHEIBANI, Mustafa; a.k.a. THAJIL, Hamid), Tehran, Iran; DOB circa 1959; alt. DOB circa 1960; POB Nasiriyah, Iraq; citizen Iran; alt. citizen Iraq (individual) [IRAQ3]

AL-SHIFA' HONEY PRESS FOR INDUSTRY AND COMMERCE, By the Shrine Next to the Gas Station, Jamal Street, Ta'iz, Yemen; P.O. Box 8089, Al-Hasabah, Sanaa, Yemen; Al-Nasr Street, Doha, Qatar; Al-'Arudh Square, Khur Maksar, Aden, Yemen [SDGT]

AL-SIBA'I, Hani Muhammad Yusuf (a.k.a. YUSUF, Hani al-Sayid Al-Sibai), United Kingdom; DOB 1 Mar 1961; POB Qaylubiyah, Egypt; nationality Egypt (individual) [SDGT]

AL-SUBAIY, Khalifa Muhammad Turki (a.k.a. ALSUBAIE, Khalifa Mohd Turki; a.k.a. AL-SUBAIE, Khalifa Mohd Turki; a.k.a. AL-SUBAYI, Khalifa; a.k.a. BIN AL-SUAIY, Khalifa Turki bin Muhammad); DOB 1 Jan 1965; citizen Qatar; National ID No. 26563400140 (Qatar); Passport 00685868 (Qatar) (individual) [SDGT]

AL-SUDANI, Khalid Ahmad Jumah, Amman, Jordan; Passport H649956 (Sudan) issued 8 Apr 2002; IARA Middle East Regional Director (individual) [SDGT]

AL-TAI, Sultan Hashim Ahmad; DOB circa 1944; POB Mosul, Iraq; nationality Iraq; Minister of Defense (individual) [IRAQ2]

AL-TALHI, Abdul Rahim (a.k.a. AL NAJI, Abu Al Bara'a; a.k.a. AL TAHI, Abdulrahim; a.k.a. AL TAHLI, Abd Al-Rahim; a.k.a. AL-TALAHI, Abe Al-Rahim; a.k.a. AL-TALHI, 'Abd al-Rahim; a.k.a. AL-TALHI, Abd' Al-Rahim Hamad; a.k.a. AL-TALHI, 'Abdul-Rahim Hammad; a.k.a. ALTALHI, Abdulrheem Hammad A; a.k.a. AL-TALJI, 'Abd-Al-Rahim; a.k.a. AL-TALJI, Abdulrahim; a.k.a. JUNAYD, Shuwayb; a.k.a. RAHIM, Abdul), Buraydah, Saudi Arabia; DOB 8 Dec 1961; POB Al-Taif, Saudi Arabia; nationality Saudi Arabia; Passport F275043 (Saudi Arabia) issued 29 May 2004 expires 5 Apr 2009 (individual) [SDGT]

AL-TAMIMI, Muhannad Juma Y (a.k.a. AL-TAMIMI, Muhamad Juma Y); DOB 1956; POB Baghdad, Iraq; Passport M0817630 (Iraq); alt. Passport H0284744 (Iraq) (individual) [IRAQ2]

ALTAMIRANO LOPEZ, Hector, Ave. De los Angeles #5183–4, Fracc. Las Palmas, Tijuana, Baja California, Mexico; c/o KONTROLES ELECTRONICOS DE BAJA CALIFORNIA, S.A. DE C.V., Ave. Azueta 11750, Col. Libertad, Tijuana, Baja California CP 22400, Mexico; DOB 18 Feb 1975; POB Baja California, Mexico; C.U.R.P. AALH750218HBCLPC02 (Mexico) (individual) [SDNTK]

AL-TIKRITI, Abid Hamid Mahmud (a.k.a. HAMMUD, Abed Mahmoud; a.k.a. MAHMOUD, Col. Abdel Hamid; a.k.a. MAHMUD, Abid Hamid bid Hamid); DOB circa 1957; POB al-Awja, near Tikrit, Iraq; nationality Iraq; Saddam Hussein al-Tikriti's presidential secretary and key advisor (individual) [IRAQ2]

AL-TIKRITI, Ahmed Watban Ibrahim Hasan (a.k.a. AL-TIKRITI, Ahmad Watban Ibrahim Hasan; a.k.a. MUHAWDAR, 'Imad 'Udi), Jirmanah Neighborhood, Damascus, Syria; Al-Ra'is Building, Mina Street, Tartus, Tartus, Syria; Al-Hadda Hotel, Sana'a, Yemen; DOB 1975; alt. DOB 1979; POB Baghdad, Iraq; nationality Iraq (individual) [IRAQ2]

AL-TIKRITI, Ali Barzan Ibrahim Hasan, Geneva, Switzerland; DOB 18 Apr 1981; nationality Iraq; son of Barzan Ibrahim Hasan al-Tikriti (individual) [IRAQ2]

AL-TIKRITI, Ali Hassan al-Majid (a.k.a. AL-KIMAWI; a.k.a. AL-MAJID, General Ali Hasan; a.k.a. AL-MAJID, General Ali Hassan); DOB 1943; alt. DOB 1941; POB al-Awja, near Tikrit, Iraq; nationality Iraq; presidential advisor and senior member of Revolutionary Command Council (individual) [IRAQ2]

AL-TIKRITI, Ali Saddam Hussein (a.k.a. HASSAN); DOB 1980; alt. DOB 1983; POB Iraq; nationality Iraq; son of Saddam Hussein al-Tikriti (individual) [IRAQ2]

AL-TIKRITI, Ayman Sabawi Ibrahim Hasan (a.k.a. AL-TIKRITI, Aiman Sabawi Ibrahim Hasan; a.k.a. AL-TIKRITI, Ayman Sab'awi Ibrahim Hasan; a.k.a. AL-TIKRITI, Ayman Sabawi Ibrahim Hassan; a.k.a. SALMAN, Qais Muhammad), Bludan, Syria; Mutanabi Area, Al Monsur, Baghdad, Iraq; DOB 21 Oct 1971; POB Baghdad, Iraq; alt. POB Al-Owja, Iraq; nationality Iraq (individual) [IRAQ2]

AL-TIKRITI, Barzan abd al-Ghafur Sulaiman Majid (a.k.a. AL-GHAFUR, Barzan Razuki abd); DOB 1960; POB Salah al-Din, Iraq; nationality Iraq; commander, Special Republican Guard (individual) [IRAQ2]

AL-TIKRITI, Barzan Ibrahim Hassan (a.k.a. AL-TAKRITI, Barzan Ibrahim Hassan; a.k.a. AL-TIKRITI, Barzan Ibrahim Hasan), Geneva, Switzerland; DOB 17 Feb 1951; POB Tikrit, Iraq; nationality Iraq; Passport M0009851/1; alt. Passport M0001666/970; alt. Passport NM0000860/114; presidential advisor; half-brother of Saddam Hussein al-Tikriti (individual) [IRAQ2]

AL-TIKRITI, Bashar Sabawi Ibrahim Hasan (a.k.a. 'ABDULLAH, 'Ali Zafir; a.k.a. AL-BAYJAT, Bashar Sabawi Ibrahim Hasan; a.k.a. AL-TIKRITI, Bashar Sab'awi Ibrahim Hasan; a.k.a. AL-TIKRITI, Bashir Sab'awi Ibrahim Al-Hasan; a.k.a. AL-TIKRITI, Bashir Sabawi Ibrahim Al-Hassan), Beirut, Lebanon; Fuad Dawod Farm, Az Zabadani, Damascus, Syria; DOB 17 Jul 1970; POB Baghdad, Iraq; nationality Iraq (individual) [IRAQ2]

AL-TIKRITI, Hala Saddam Hussein; DOB 1972; POB Iraq; nationality Iraq; daughter of Saddam Hussein al-Tikriti (individual) [IRAQ2]

AL-TIKRITI, Hamid Raja Shalah (a.k.a. AL-TIKRITI, Hamid Raja Shalah Hassan; a.k.a. AL-TIKRITI, Hamid Raja-Shalah Hassum); DOB 1950; POB Bayji, Salah al-Din Governorate, Iraq; nationality Iraq; air force commander (individual) [IRAQ2]

AL-TIKRITI, Hani abd-al-Latif Tilfah; DOB circa 1962; POB al-Awja, near Tikrit, Iraq; nationality Iraq; #2 in Special Security Organization (individual) [IRAQ2]

AL-TIKRITI, Ibrahim Ahmad abd al-Sattar Muhammed; DOB 1943; alt. DOB 1952; alt. DOB 1950; POB Ba'qubah or al-Sumayda/Shirqat, Iraq; nationality Iraq; armed forces chief of staff (individual) [IRAQ2]

AL-TIKRITI, Ibrahim Sabawi Ibrahim Hasan (a.k.a. AL-TIKRITI, Ibrahim Sabawi Ibrahim Al-Hassan; a.k.a. AL-TIKRITI, Ibrahim Sab'awi Ibrahim Hasan; a.k.a. AL-TIKRITI, Ibrahim Sabawi Ibrahim Hassan; a.k.a. SALMAN, Muhammad Da'ud), Al-Shahid Street, Al-Mahata Neighborhood, Az Zabadani, Syria; Iraq; Fuad Dawod Farm, Az Zabadani, Damascus, Syria; DOB 25 Oct 1983; alt. DOB 1977; POB Baghdad, Iraq; nationality Iraq; Passport 284173 (Iraq) expires 21 Aug 2005 (individual) [IRAQ2]

AL-TIKRITI, Jamal Mustafa Abdallah Sultan; DOB 4 May 1955; POB al-Samnah, near Tikrit, Iraq; nationality Iraq; deputy head of tribal affairs in presidential office (individual) [IRAQ2]

AL-TIKRITI, Kamal Mustafa Sultan Abdallah (a.k.a. ABDALLAH, Kamal Mustafa; a.k.a. AL-TIKRITI, Kamal Mustafa Abdallah Sultan); DOB 1952; alt. DOB 4 May 1955; POB Tikrit, Iraq; nationality Iraq; Republican Guard Secretary; led Special Republican Guard and commanded both Republican Guard corps (individual) [IRAQ2]

AL-TIKRITI, Khawla Barzan Ibrahim Hasan, Geneva, Switzerland; DOB 3 Dec 1986; nationality Iraq; daughter of Barzan Ibrahim Hasan al-Tikriti (individual) [IRAQ2]

AL-TIKRITI, Mohammad Barzan Ibrahim Hasan, Geneva, Switzerland; DOB 2 Nov 1972; nationality Iraq; son of Barzan Ibrahim Hasan al-Tikriti (individual) [IRAQ2]

AL-TIKRITI, Muzahim Sa'b Hassan; DOB circa 1946; alt. DOB 1949; POB al-Awja, near Tikrit, Iraq; nationality Iraq; led Iraq's Air Defense Forces; Deputy Director, Organization of Military Industrialization (individual) [IRAQ2]

AL-TIKRITI, Noor Barzan Ibrahim Hasan, Geneva, Switzerland; DOB 2 Nov 1983; nationality Iraq; daughter of Barzan Ibrahim Hasan al-Tikriti (individual) [IRAQ2]

AL-TIKRITI, Omar Sabawi Ibrahim Hasan (a.k.a. AL-ALUSI, Umar Ahmad Ali; a.k.a. AL-TIKRITI, Omar Sab'awi Ibrahim Hasan; a.k.a. AL-TIKRITI, Omar Sabawi Ibrahim Hassan; a.k.a. AL-TIKRITI, Umar Sabawi Ibrahim Hasan), Damascus, Syria; Yemen; Al-Shahid Street, Al-Mahata Neighborhood, Az Zabadani, Syria; DOB circa 1970; POB Baghdad, Iraq; nationality Iraq; Passport 2863795S (Iraq) expires 23 Aug 2005 (individual) [IRAQ2]

AL-TIKRITI, Qusay Saddam Hussein; DOB 1965; alt. DOB 1966; POB Baghdad, Iraq; nationality Iraq; Saddam Hussein al-Tikriti's second son; oversaw Special Republican Guard, Special Security Organization, and Republican Guard (individual) [IRAQ2]

AL-TIKRITI, Rafi abd-al-Latif Tilfah; DOB circa 1954; POB Tikrit, Iraq; nationality Iraq; Director, Directorate of General Security (individual) [IRAQ2]

AL-TIKRITI, Raghad Saddam Hussein, Amman, Jordan; DOB 1967; POB Iraq;

nationality Iraq; daughter of Saddam Hussein al-Tikriti (individual) [IRAQ2]

AL-TIKRITI, Rana Saddam Hussein, Amman, Jordan; DOB 1969; POB Iraq; nationality Iraq; daughter of Saddam Hussein al-Tikriti (individual) [IRAQ2]

AL-TIKRITI, Rukan Razuki abd-al-Ghafur Sulaiman (a.k.a. ABU WALID; a.k.a. AL-MAJID, Rukan abd al-Gafur; a.k.a. AL-MAJID, Rukan abdal-Ghaffur Sulayman; a.k.a. AL-MAJID, Rukan Razuqi abd al-Gahfur; a.k.a. AL-TIKRITI, Rukan 'abd al-Ghaffur al-Majid; a.k.a. AL-TIKRITI, Rukan abd al-Ghaffur al-Majid); DOB 1956; POB Tikrit, Iraq; nationality Iraq; head of Tribal Affairs Office in presidential office (individual) [IRAQ2]

AL-TIKRITI, Sab'awi Ibrahim Hassan (a.k.a. AL-TAKRITI, Sabawi Ibrahim Hassan); DOB 1947; POB Tikrit, Iraq; nationality Iraq; presidential advisor; half-brother of Saddam Hussein al-Tikriti (individual) [IRAQ2]

AL-TIKRITI, Sa'd abd-al-Majid al-Faysal; DOB 1944; POB Tikrit, Iraq; nationality Iraq; Ba'th party regional command chairman, Salah al-Din (individual) [IRAQ2]

AL-TIKRITI, Sa'd Sabawi Ibrahim Hasan (a.k.a. AL-TIKRITI, Sa'ad Sabawi Ibrahim Hasan; a.k.a. AL-TIKRITI, Sa'd Sab'awi Hasan), Al-Shahid Street, Al-Mahata Neighborhood, Az Zabadani, Syria; Yemen; DOB 19 Sep 1988; nationality Iraq (individual) [IRAQ2]

AL-TIKRITI, Saddam Hussein (a.k.a. ABU ALI; a.k.a. HUSAYN, Saddam; a.k.a. HUSSAIN, Saddam; a.k.a. HUSSEIN, Saddam); DOB 28 Apr 1937; POB al-Awja, near Tikrit, Iraq; nationality Iraq; named in UNSCR 1483; President since 1979 (individual) [IRAQ2]

AL-TIKRITI, Saja Barzan Ibrahim Hasan, Geneva, Switzerland; DOB 1 Jan 1978; nationality Iraq; daughter of Barzan Ibrahim Hasan al-Tikriti (individual) [IRAQ2]

AL-TIKRITI, Tahir Jalil Habbush; DOB 1950; POB Tikrit, Iraq; nationality Iraq; director of Iraqi Intelligence Service (individual) [IRAQ2]

AL-TIKRITI, Thoraya Barzan Ibrahim Hasan, Iraq; DOB 19 Dec 1980; alt. DOB 19 Jan 1980; nationality Iraq; daughter of Barzan Ibrahim Hasan al-Tikriti (individual) [IRAQ2]

AL-TIKRITI, Uday Saddam Hussein (a.k.a. HUSSEIN, Udai Saddam); DOB 1964; alt. DOB 1967; POB Baghdad, Iraq; nationality Iraq; Saddam Hussein al-Tikriti's eldest son; leader of paramilitary organization Fedayeen Saddam (individual) [IRAQ2]

AL-TIKRITI, Walid Hamid Tawfiq (a.k.a. AL-NASIRI, Walid Hamid Tawfiq); DOB circa 1950; POB Tikrit, Iraq; nationality Iraq; Governor of Basrah (individual) [IRAQ2]

AL-TIKRITI, Watban Ibrahim Hassan (a.k.a. AL-HASSAN, Watab Ibrahim; a.k.a. AL-TAKRITI, Watban; a.k.a. AL-TIKRITI, Watban Ibrahim al-Hasan); DOB 1952; POB Tikrit, Iraq; nationality Iraq; presidential advisor; half-brother of Saddam Hussein al-Tikriti (individual) [IRAQ2]

AL-TIKRITI, Yasir Sabawi Ibrahim Hasan (a.k.a. ABDALLAH, Ali Thafir; a.k.a. AL-TIKRITI, Yasir Sab'awi Ibrahim Hasan; a.k.a. AL-TIKRITI, Yasir Sabawi Ibrahim Hassan; a.k.a. AL-TIKRITI, Yasser Sabawi Ibrahim Hasan; a.k.a. AL-TIKRITI, Yassir Sabawi Ibrahim Hasan), Az Zabadani, Syria; Mosul, Iraq; DOB 15 May 1968; alt. DOB 1970; POB Al-Owja, Iraq; alt. POB Baghdad, Iraq; nationality Iraq; Passport 284158 (Iraq) expires 21 Aug 2005 (individual) [IRAQ2]

AL-TURKI, Hassan Abdullah Hersi (a.k.a. AL-TURKI, Hassan); DOB circa 1944; POB Ogaden Region, Ethiopia (individual) [SDGT]

AL-UBAIDI, Amir Rashid Muhammad; DOB 1939; POB Baghdad, Iraq; nationality Iraq; Minister of Oil (individual) [IRAQ2]

AL-UBAIDI, Ghazi Hammud; DOB 1944; POB Baghdad, Iraq; nationality Iraq; Ba'th party regional command chairman, Wasit (individual) [IRAQ2]

AL-UBAIDI, Yahia Abdallah; nationality Iraq; Ba'th party regional command chairman, al-Basrah (individual) [IRAQ2]

AL-UBAYDI, Ahmad Hassan Kaka (a.k.a. AL NOBANI, Ali; a.k.a. AL-OBEIDI, Ahmed Hassan Kaka; a.k.a. HAZIM KAKA), Kurdi Al Nasir village, Iraq; Al Humayra Village, Taza sub district, Iraq; DOB 1949; POB Baghdad, Iraq; nationality Iraq; Passport F032516 (Iraq) issued 4 May 1976 (individual) [IRAQ3]

AL-UBAYDI, Intissar, Iraq; DOB 1974; nationality Iraq; wife of Izzat Ibrahim Al-Duri (individual) [IRAQ2]

AL-USTA, Raw'a (a.k.a. AL-ASTAH, Raw'ah; a.k.a. AL-OUSTA, Raw'a; a.k.a. ALOUSTA, Rawaa; a.k.a. AL-'USTA, Rawa; a.k.a. AL-USTA, Raw'ah; a.k.a. AL-USTAH, Raw'ah), Damascus, Syria; DOB 1982; nationality Syria (individual) [IRAQ3]

ALVARADO BONILLA, Alejandro, c/o DROGAS LA REBAJA BOGOTA S.A., Bogota, Colombia; DOB 29 May 1974; Cedula No. 79641039 (Colombia) (individual) [SDNT]

ALVAREZ AGUIRRE, Manuel, Panama (individual) [CUBA]

ALVAREZ DE LA TORRE, Mario Andres, c/o COSMEPOP, Bogota, Colombia; c/o AMERICANA DE COSMETICOS S.A., Bogota, Colombia; DOB 6 Mar 1972; Cedula No. 232594 (Colombia) (individual) [SDNT]

ALVAREZ DEL RIO, Fredy de Jesus; POB Colombia; Cedula No. 98557177 (Colombia) (individual) [SDNT]

ALVAREZ GAVIRIA, Jaime Antonio, c/o EXPORT CAFE LTDA., Cali, Colombia; DOB 17 Aug 1947; Cedula No. 10060853 (Colombia) (individual) [SDNT]

ALVAREZ HERNANDEZ, Maria Teresa, c/o CONSULTORIA DE OCCIDENTE, S.A. DE C.V., Guadalajara, Jalisco, Mexico; c/o GS PLUS CONSULTORES, S.A. DE C.V., Tijuana, Baja California, Mexico; DOB 25 Jul 1960; POB Guadalajara, Jalisco, Mexico; R.F.C. AAHT–600725–4L7 (Mexico) (individual) [SDNTK]

ALVAREZ TOSTADO, Jose (a.k.a. CASTELLANOS ALVAREZ TOSTADO, Juan Jose; a.k.a. GONZALEZ, Jose); DOB 27 Aug 1955; POB Mexico (individual) [SDNTK]

ALVAREZ VAZQUEZ, Jose Gerardo (a.k.a. ALVAREZ ALVAREZ, Gerardo; a.k.a. ALVAREZ VASQUEZ, Joel; a.k.a. ALVAREZ VASQUEZ, Jose Gerardo; a.k.a. ALVAREZ VELASQUEZ, Jose Gerardo; a.k.a. SANCHEZ SALAMANCA, Salvador; a.k.a. ZALDIVAR VEGA, Javier; a.k.a. ''EL GERA''; a.k.a. ''EL INDIO''), c/o AMERICAN TUNE UP, S.A. DE C.V., Guadalajara, Jalisco, Mexico; Avenida Gonzalez Gallo #2537, Sector Reforma, Guadalajara, Jalisco, Mexico; DOB 03 Nov 1963; alt. DOB 24 Sep 1965; alt. DOB 10 May 1966; POB Las Avilas, Guerrero, Mexico; citizen Mexico; nationality Mexico (individual) [SDNTK]

ALVARO ENRIQUE BARRERA RIOS Y CIA. S. EN C.S., Calle 14 Oeste No. 2B1–45 apto. 302E, Cali, Colombia; NIT # 900105952–3 (Colombia) [SDNT]

ALVIS PATINO, Gentil (a.k.a. LOPEZ, Angel Leopoldo; a.k.a. MARTINEZ VEGA, Juan Jose; a.k.a. PATINO ORTIZ, Alvis; a.k.a. ''CHIGUIRO''; a.k.a. ''GONZALEZ, Ruben''); DOB 4 Jun 1961; POB El Doncello, Caqueta, Colombia; Cedula No. 12059198 (Venezuela); alt. Cedula No. 17669391 (Colombia) (individual) [SDNTK]

ALWAN, Allaidin Hussain (a.k.a. ALWAN, Alla Idin Hussain), Baghdad, Iraq (individual) [IRAQ2]

AL-YACOUB, Ibrahim Salih Mohammed; DOB 16 Oct 1966; POB Tarut, Saudi Arabia; citizen Saudi Arabia (individual) [SDGT]

AL-YASSIN, Husam Muhammad Amin; DOB 1953; alt. DOB 1958; POB Tikrit, Iraq; nationality Iraq; head, National Monitoring Directorate (individual) [IRAQ2]

AL-ZARQAWI, Abu Mus'Ab (a.k.a. 'ABD AL-KARIM; a.k.a. ABU AL-MU'TAZ; a.k.a. AL-HABIB; a.k.a. AL-KHALAYLAH, Ahmad Fadil Nazzal; a.k.a. AL-MUHAJIR; a.k.a. GHARIB; a.k.a. KHALAILAH, Ahmed Fadeel; a.k.a. KHALAYLEH, Fedel Nazzel; a.k.a. ''MOUHANAD''; a.k.a. ''MOUHANNAD''; a.k.a. ''MUHANNAD''; a.k.a. ''RASHID''); DOB 20 Oct 1966; POB Zarqa, Jordan; citizen Jordan; National ID No. 9661031030 (Jordan); Passport Z264968 (Jordan) (individual) [SDGT]

ALZATE JIMENEZ, Diego Uriel, c/o FINANCIACION Y EMPRESA S.A., Cali, Colombia; c/o OUTSOURCING DE OPERACIONES S.A., Bogota, Colombia; c/o ANDINAENVIOS AN EN S.A., Quito, Ecuador; c/o INVERSIONES CORPORATIVAS LTDA., Cali, Colombia; c/o CAMBIOS Y CAPITALES S.A., Bogota, Colombia; c/o TURISMO HANSA S.A., San Andres, Colombia; c/o INVERSIONES SARDI ALZATE S.C.S., Cali, Colombia; c/o FUNDACION PARA LA EDUCACION Y EL DESARROLLO SOCIAL, Cali, Colombia; DOB 13 Aug 1959; POB Colombia; Cedula No. 16658014 (Colombia); Passport 16658014 (Colombia) (individual) [SDNT]

ALZATE JIMENEZ, Luis Holmes, c/o FUNDACION PARA LA EDUCACION Y EL DESARROLLO SOCIAL, Cali, Colombia; Calle 5E No. 47–57 apto. 302, Cali, Colombia; c/o TURISMO HANSA S.A., San Andres, Colombia; c/o CAMBIOS Y CAPITALES S.A., Bogota, Colombia; c/o ANDINAENVIOS AN EN S.A., Quito, Ecuador; DOB 04 Jun 1958; POB Colombia; Cedula No. 16597861 (Colombia); Passport AF719920 (Colombia) (individual) [SDNT]

ALZATE JIMENEZ, Tulio Hernando, c/o TURISMO HANSA S.A., San Andres,

Colombia; c/o FUNDACION PARA LA EDUCACION Y EL DESARROLLO SOCIAL, Cali, Colombia; c/o FINANCIACION Y EMPRESA S.A., Cali, Colombia; c/o CONSTRUCTORA E INMOBILIARIA ANDINA S.A., Cali, Colombia; c/o T.H. ALZATE Y CIA. S.C.S., Cali, Colombia; c/o CAMBIOS Y CAPITALES S.A., Bogota, Colombia; c/o ANDINAENVIOS AN EN S.A., Quito, Ecuador; c/o INVERSIONES CORPORATIVAS LTDA., Cali, Colombia; DOB 28 Mar 1961; POB Colombia; Cedula No. 16659731 (Colombia); Passport AF770530 (Colombia) (individual) [SDNT]

ALZATE SALAZAR, Luis Alfredo, c/o DROGAS LA REBAJA BOGOTA S.A., Bogota, Colombia; c/o LABORATORIOS KRESSFOR DE COLOMBIA S.A., Bogota, Colombia; c/o COINTERCOS S.A., Bogota, Colombia; c/o DEPOSITO POPULAR DE DROGAS S.A., Bogota, Colombia; DOB 27 Nov 1957; Cedula No. 16595689 (Colombia) (individual) [SDNT]

AL-ZAWRA TELEVISION STATION (a.k.a. AL ZAOURA NETWORK; a.k.a. AL ZAWRAH TELEVISION; a.k.a. AL ZOURA TV STATION; a.k.a. AL-ZAWARA SATELLITE TELEVISION STATION; a.k.a. ALZAWRAA TV; a.k.a. AL-ZAWRAA TV; a.k.a. EL-ZAWRA SATELLITE STATION; a.k.a. ZAWRAH TV STATION; a.k.a. ZORAH CHANNEL), Syria [IRAQ3]

AL-ZIBARI, Arshad Muhammad Ahmad Muhammad, Iraq; DOB 1942; a former minister of state (individual) [IRAQ2]

AL-ZINDANI, Shaykh Abd-al-Majid (a.k.a. AL-ZINDANI, Abdelmajid; a.k.a. AL-ZINDANI, Shaykh 'Abd Al-Majid); DOB circa 1950; POB Yemen; nationality Yemen; Passport A005487 (Yemen) issued 13 Aug 1995 (individual) [SDGT]

AL-ZUMAR, Abbud (a.k.a. ZUMAR, Colonel Abbud), Egypt; POB Egypt; Factional Leader of JIHAD GROUP (individual) [SDT]

AMADOR CEDIEL, Fernando, c/o WORLD LINE SYSTEM S.A., Palmira, Valle, Colombia; c/o RFA CONSULTORES Y AUDITORES LTDA., Cali, Colombia; c/o CECEP EDITORES S.A., Cali, Colombia; Avenida 9A No. 25N–30, Cali, Colombia; c/o APVA S.A., Cali, Colombia; c/o NEGOCIOS Y CAPITALES S.A., Pereira, Colombia; c/o CECEP S.A., Cali, Colombia; DOB 12 Oct 1962; POB Sogamoso, Boyaca, Colombia; Cedula No. 16683047 (Colombia); Passport AG830763 (Colombia) (individual) [SDNT]

AMAYA OROZCO, Luis Alberto, Calle 18N No. 9–46, Cali, Colombia; c/o COMERCIALIZADORA DE CARNES DEL PACIFICO LTDA., Cali, Colombia; DOB 15 Sep 1945; Cedula No. 4882167 (Colombia) (individual) [SDNT]

AMD CO. LTD AGENCY, Al-Tahrir Car Parking Building, Tahrir Sq., Floor 3, Office 33, P.O. Box 8044, Baghdad, Iraq [IRAQ2]

AMDOUNI, Mehrez (a.k.a. AL-AMDOUNI, Mehrez Ben Mahmoud Ben Sassi; a.k.a. FUSCO, Fabio; a.k.a. HASSAN, Mohamed; a.k.a. ''ABU THALE''); DOB 18 Dec 1969; POB Tunis, Tunisia; nationality Tunisia; Passport 0801888 (Bosnia and Herzegovina); alt. Passport G737411 (Tunisia) issued 24 Oct 1990 expires 20 Sep 1997 (individual) [SDGT]

AMERICAN AIR WAYS CHARTERS, INC., 1840 West 49th Street, Hialeah, FL [CUBA]

AMERICAN TUNE UP, S.A. DE C.V., Guadalajara, Jalisco, Mexico; Registration ID MAT 46–47 TOMO 460 L. (Mexico) [SDNTK]

AMERICANA DE COSMETICOS S.A., Carrera 70 No. 54–30, Bogota, Colombia; Calle 12B No. 27–40, Int. 4 of., Bogota, Colombia; Carrera 28 No. 11–65 of. 707, Bogota, Colombia; Carrera 12 No. 71–53 of. 502, Bogota, Colombia; Calle 12B No. 27–39, Bogota, Colombia; NIT # 830028750–9 (Colombia) [SDNT]

AMEZCUA CONTRERAS ORGANIZATION, Mexico [SDNTK]

AMEZCUA CONTRERAS, Adan (a.k.a. MANZANO, Jose Luis), Francisco I. Madero 749, Colonia Moralete, Colima, Colima, Mexico; Calle General Juan Alvarez 1010, Colonia Lomas Vista Hermosa, Colima, Colima, Mexico; Belizario Dominguez, No. 511, Colima, Colima, Mexico; Carlos Chavez 5, Colima, Colima, Mexico; Toreros No. 672, Colonia Jardines de Guadalupe, Guadalajara, Jalisco, Mexico; DOB 27 Jun 1969; citizen Mexico; nationality Mexico; R.F.C. AECA–690627 (Mexico) (individual) [SDNTK]

AMEZCUA CONTRERAS, Jose de Jesus (a.k.a. AMESCUA, Chuey; a.k.a. AMEZCUA CONTRERAS, Jesus; a.k.a. AMEZCUA, Chuy; a.k.a. AMEZCUA, Jose de Jesus; a.k.a. HERNANDEZ, Adan); DOB 31 Jul 1964; alt. DOB 31 Jul 1964; alt. DOB 31 Jul 1965; POB Mexico (individual) [SDNTK]

AMEZCUA CONTRERAS, Luis Ignacio (a.k.a. AMEZCUA, Luis; a.k.a. CONTRERAS, Luis C.; a.k.a. LOPEZ, Luis; a.k.a. LOZANO, Eduardo; a.k.a. OCHOA, Salvador; a.k.a. RODRIGUEZ LOPEZ, Sergio); DOB 22 Feb 1964; alt. DOB 21 Feb 1974; alt. DOB 21 Feb 1964; POB Mexico (individual) [SDNTK]

AMEZCUA CONTRERAS, Patricia (a.k.a. AMEZCUA CONTRERAS, Patty; a.k.a. AMEZCUA DE LADINO, Patricia), c/o FARMACIA JERLYNE, S.A. DE C.V., Tijuana, Baja California, Mexico; Calle Jesus Ponce 1083, Colonia Jardin Vista Hermosa, Colima, Colima, Mexico; DOB 18 Mar 1967; citizen Mexico; nationality Mexico; C.U.R.P. AECP670318MJCMNT07 (Mexico); R.F.C. AECP–670318 (Mexico) (individual) [SDNTK]

AMEZQUITA MENESES, Salustio, c/o INVERSIONES GEMINIS S.A., Cali, Colombia; c/o INMOBILIARIA U.M.V. S.A., Cali, Colombia; DOB 1 Jul 1946; Cedula No. 14943885 (Colombia) (individual) [SDNT]

AMIN EL GEZAI COMPANY (a.k.a. EL AMIN EL GEZAI COMPANY), Khartoum, Sudan [SUDAN]

AMIN INDUSTRIAL COMPLEX (a.k.a. AMIN INDUSTRIAL COMPANY; a.k.a. AMIN INDUSTRIAL COMPOUND), Amin Industrial Estate, Khalage Rd., Seyedi District, Mashad, Iran; P.O. Box 91735–549, Mashad, Iran; Kaveh Complex, Khalaj Rd., Seyedi St., Mashad, Iran [NPWMD]

AMMARI, Saifi (a.k.a. ''ABDALARAK''; a.k.a. ''ABDERREZAK LE PARA''; a.k.a. ''ABDERREZAK ZAIMECHE''; a.k.a. ''ABDUL RASAK AMMANE ABU HAIDRA''; a.k.a. ''ABOU HAIDARA''; a.k.a. ''EL OURASSI''; a.k.a. ''EL PARA''); DOB 1 Jan 1968; POB Kef Rih, Algeria; nationality Algeria (individual) [SDGT]

AMMASH, Huda Salih Mahdi; DOB 1953; POB Baghdad, Iraq; nationality Iraq; member, Ba'th party regional command (individual) [IRAQ2]

AMMUNITION AND METALLURGY INDUSTRIES GROUP (a.k.a. AMIG; a.k.a. AMMUNITION AND METALLURGY INDUSTRY GROUP; a.k.a. AMMUNITION INDUSTRIES GROUP; a.k.a. SANAYE MOHEMATSAZI), P.O. Box 16765–1835, Pasdaran Street, Tehran, Iran; Department 145–42, P.O. Box 16765–128, Moghan Avenue, Pasdaran Street, Tehran, Iran [NPWMD]

AMPARO RODRIGUEZ DE GIL Y CIA. S. EN C., Avenida 4N No. 5N–20, Cali, Colombia [SDNT]

ANDINA DE CONSTRUCCIONES S.A., Cali, Colombia [SDNT]

ANDINAENVIOS AN EN S.A., Avenida 10 de Agosto N37–288 y Villalengua, Quito, Ecuador; RUC # 1791769155001 (Ecuador) [SDNT]

ANDRADE MENDEZ, Gerardo, c/o CHAMARTIN S.A., Cali, Colombia; c/o ADMINISTRADORA DE SERVICIOS VARIOS CALIMA S.A., Cali, Colombia; DOB 17 Jul 1962; Cedula No. 12189130 (Colombia); Passport 12189130 (Colombia) (individual) [SDNT]

ANDRADE QUINTERO, Ancizar, c/o INMOBILIARIA U.M.V. S.A., Cali, Colombia; c/o SERVICIOS INMOBILIARIAS LTDA., Cali, Colombia; c/o INMOBILIARIA BOLIVAR LTDA., Cali, Colombia; DOB 23 Jan 1962; Cedula No. 16672464 (Colombia) (individual) [SDNT]

ANGELINI, Alejandro Abood, Panama (individual) [CUBA]

ANGLO-CARIBBEAN CO., LTD. (a.k.a. AVIA IMPORT), Ibex House, The Minories, London EC3N 1DY, United Kingdom [CUBA]

ANGULO OROBIO (SEGUNDO), Jose Francisco, Avenida 4N No. 17–43 apt. 801, Cali, Colombia; c/o INVERSIONES Y CONSTRUCCIONES VALLE S.A., Cali, Colombia; DOB 8 Sep 1964; Cedula No. 16706561 (Colombia) (individual) [SDNT]

ANSAR AL-ISLAM (a.k.a. ANSAR AL-SUNNA; a.k.a. ANSAR AL-SUNNA ARMY; a.k.a. JAISH ANSAR AL-SUNNA; a.k.a. JUND AL-ISLAM; a.k.a. ''DEVOTEES OF ISLAM''; a.k.a. ''FOLLOWERS OF ISLAM IN KURDISTAN''; a.k.a. ''HELPERS OF ISLAM''; a.k.a. ''KURDISH TALIBAN''; a.k.a. ''KURDISTAN SUPPORTERS OF ISLAM''; a.k.a. ''PARTISANS OF ISLAM''; a.k.a. ''SOLDIERS OF GOD''; a.k.a. ''SOLDIERS OF ISLAM''; a.k.a. ''SUPPORTERS OF ISLAM IN KURDISTAN''), Iraq [FTO] [SDGT]

ANSHORI, Abdullah (a.k.a. THOYIB, Ibnu; a.k.a. TOYIB, Ibnu; a.k.a. ''ABU FATHI''; a.k.a. ''ABU FATIH''); DOB 1958; POB Pacitan, East Java, Indonesia; nationality Indonesia (individual) [SDGT]

ANTIA SIERRA, Diurny Lorena, c/o COOPERATIVA MERCANTIL COLOMBIANA COOMERCOL, Cali,

Colombia; DOB 28 Sep 1975; Cedula No. 66877933 (Colombia); Passport 66877933 (Colombia) (individual) [SDNT]

ANTILLANA SALVAGE CO. LTD., c/o EMPRESA ANTILLANA DE SALVAMENTO, 4th Floor, Lonja del Comercio, Havana Vieja, Havana, Cuba [CUBA]

AOUADI, Mohamed Ben Belgacem (a.k.a. AOUADI, Mohamed Ben Belkacem), Via A. Masina n.7, Milano, Italy; DOB 11 Dec 1974; POB Tunisia; nationality Tunisia; Italian Fiscal Code DAOMMD74T11Z352Z; Passport L 191609 issued 28 Feb 1996 expires 27 Feb 2001 (individual) [SDGT]

APAOLAZA SANCHO, Ivan; DOB 10 Nov 1971; POB Beasain, Guipuzcoa Province, Spain; D.N.I. 44.129.178; Member ETA (individual) [SDGT]

APOYOS DIAGNOSTICOS S.A. (a.k.a. APOYOS DIAGNOSTICOS DE OCCIDENTE S.A.; f.k.a. UNIDAD DE DIAGNOSTICO MEDICO ESPECIALIZADO LTDA.; f.k.a. ''UNIDES LTDA.''), Calle 26 No. 34–60, Tulua, Valle, Colombia; NIT # 800118755–2 (Colombia) [SDNT]

APVA S.A., Calle 5A No. 22–13, Cali, Colombia; NIT # 805010421–0 (Colombia) [SDNT]

AQSSA SOCIETY YEMEN (a.k.a. AL-AQSA ASBL; a.k.a. AL-AQSA CHARITABLE FOUNDATION; a.k.a. AL-AQSA CHARITABLE ORGANIZATION; a.k.a. AL-AQSA E.V.; a.k.a. AL-AQSA FOUNDATION; a.k.a. AL-AQSA INTERNATIONAL FOUNDATION; a.k.a. AL-AQSA ISLAMIC CHARITABLE SOCIETY; a.k.a. AL-AQSA SINABIL ESTABLISHMENT; a.k.a. AL-AQSA SPANM I STIFTELSE; a.k.a. AL-AQSA SPANMAL STIFTELSE; a.k.a. AQSSA SOCIETY; a.k.a. CHARITABLE AL-AQSA ESTABLISHMENT; a.k.a. CHARITABLE SOCIETY TO HELP THE NOBLE AL-AQSA; a.k.a. FORENINGEN AL-AQSA; a.k.a. ISLAMIC CHARITABLE SOCIETY FOR AL-AQSA; a.k.a. MU' ASA AL-AQSA AL-KHAYRIYYA; a.k.a. MU' ASSA SANABIL AL-AQSA AL-KHAYRIYYA; a.k.a. NUSRAT AL-AQSA AL-SHARIF; a.k.a. SANABIL AL-AQSA CHARITABLE FOUNDATION; a.k.a. STICHTING AL-AQSA; a.k.a. SWEDISH CHARITABLE AQSA EST.), P.O. Box 14101, San 'a, Yemen [SDGT]

AQUAMARINA ISLAND INTERNATIONAL CORPORATION, Avenida del Pastelillo 24–46, Edificio Fadia—Manga, Cartagena, Colombia; Avenida Cuba Calle 38, Edificio Los Cristales Piso 3, Panama City, Panama; Calle 93 No. 14–20 Ofc. 611, Bogota, Colombia; RUC # 2120851397079 (Panama) [SDNT]

AQUILEA S.A., Carrera 21 No. 13B–21, Cali, Colombia; Carrera 23 No. 12–41, Cali, Colombia; Carrera 21 No. 13B–33, Cali, Colombia; NIT # 900061351–6 (Colombia) [SDNT]

ARAB CEMENT COMPANY, Durdeib, Sudan; P.O. Box 6180, Khartoum, Sudan [SUDAN]

ARAB PETROLEUM ENGINEERING COMPANY LTD, Amman, Jordan [IRAQ2]

ARAB PROJECTS COMPANY S.A. LTD., P.O. Box 1318, Amman, Jordan; P.O. Box 7939, Beirut, Lebanon; P.O. Box 1972, Riyadh, Saudi Arabia [IRAQ2]

ARAB SUDANESE BLUE NILE AGRICULTURAL COMPANY, Khartoum, Sudan [SUDAN]

ARAB SUDANESE SEED COMPANY, Khartoum, Sudan [SUDAN]

ARAB SUDANESE VEGETABLE OIL COMPANY, Khartoum, Sudan [SUDAN]

ARANA MARIA, Jairo Abraham, c/o EDIFICACIONES DEL CARIBE LTDA., Barranquilla, Colombia; c/o INMOBILIARIA HOTELERA DEL CARIBE LTDA., Barranquilla, Colombia; c/o SURAMERICANA DE HOTELES LTDA., Barranquilla, Colombia; c/o NEGOCIOS Y PROPIEDADES DEL CARIBE LTDA., Barranquilla, Colombia; Calle 74 No. 53–30, Barranquilla, Colombia; c/o INVERSIONES PRADO TRADE CENTER LTDA., Barranquilla, Colombia; c/o DESARROLLOS URBANOS ''DESARROLLAR'' LTDA., Barranquilla, Colombia; c/o GRAN COMPANIA DE HOTELES LTDA., Barranquilla, Colombia; c/o INMOBILIARIA DEL CARIBE LTDA., Barranquilla, Colombia; c/o HOTELES E INMUEBLES DE COLOMBIA LTDA., Barranquilla, Colombia; c/o INVERSIONES HOTELERAS DEL LITORAL LTDA., Barranquilla, Colombia; DOB 8 Feb 1953; alt. DOB 21 May 1946; alt. DOB 2 May 1946; Cedula No. 7450538 (Colombia); Passport Z4966601 (Colombia); alt. Passport K1030420 (Colombia) (individual) [SDNT]

ARANIBAR CASTELLANOS, Percy Dangello, Jr. Augusto Gonzales Olaechea 1311, URB Elio, Lima, Peru; c/o EMPRESA DE TRANSPORTES CHULUCANAS 2000 S.A., Lima, Peru; c/o LASA PERU S.A.C., Lima, Peru; DOB 27 May 1971; LE Number 06778742 (Peru) (individual) [SDNTK]

ARAUJO LAVEAGA, Carmen Amelia, c/o ESTANCIA INFANTIL NINO FELIZ S.C., Culiacan, Sinaloa, Mexico; DOB 29 Jan 1967; POB Sinaloa, Mexico; C.U.R.P. AALC670129MSLRVR00 (Mexico) (individual) [SDNTK]

ARBELAEZ GALLON, Gladys, c/o SERVICIOS INMOBILIARIOS LTDA., Cali, Colombia; DOB 12 Nov 1960; Cedula No. 31858038 (Colombia) (individual) [SDNT]

ARBELAEZ PARDO, Amparo, c/o VALORES MOBILIARIOS DE OCCIDENTE, Bogota, Colombia; c/o DECAFARMA S.A., Bogota, Colombia; c/o LABORATORIOS KRESSFOR DE COLOMBIA S.A., Bogota, Colombia; c/o INVERSIONES ARA LTDA., Cali, Colombia; c/o INTERAMERICA DE CONSTRUCCIONES S.A., Cali, Colombia; c/o CREDIREBAJA S.A., Cali, Colombia; Casa No. 19, Avenida Lago, Ciudad Jardin, Cali, Colombia; DOB 9 Nov 1950; alt. DOB 9 Aug 1950; Cedula No. 31218903 (Colombia); Passport AC 568973 (Colombia); alt. Passport PEDO1850 (Colombia) (individual) [SDNT]

ARBOLEDA ARROYAVE, Pedro Nicholas (a.k.a. ARBOLEDA ARROYAVE, Pedro Nicolas), c/o FUNDASER, Cali, Colombia; c/o DISTRIBUIDORA DE DROGAS CONDOR LTDA., Bogota, Colombia; c/o D'CACHE S.A., Cali, Colombia; c/o CREDIREBAJA S.A., Cali, Colombia; c/o DEPOSITO POPULAR DE DROGAS S.A., Cali, Colombia; DOB 23 Jun 1957; Cedula No. 16602372 (Colombia) (individual) [SDNT]

ARBOLEDA ROMERO, Julio Cesar, c/o INVERSIONES BETANIA LTDA., Cali, Colombia; c/o INVERSIONES EL PENON S.A., Cali, Colombia; DOB 1 Dec 1953; Cedula No. 16205508 (Colombia) (individual) [SDNT]

ARCA DISTRIBUCIONES LTDA., Carrera 23 No. 37–39 of. 202, Bogota, Colombia; NIT # 830131785–6 (Colombia) [SDNT]

ARCE BORBOA, Ana Cristina, Calle Artesanos No. 255, Colonia Burocrata, Culiacan, Sinaloa, Mexico; c/o COMPANIA MINERA DEL RIO CIANURY S.A. DE C.V., Culiacan, Sinaloa, Mexico; c/o MINERA RIO PRESIDIO S.A. DE C.V., Culiacan, Sinaloa, Mexico; c/o COPA DE PLATA S.A. DE C.V., Culiacan, Sinaloa, Mexico; Prof. Raul Franco Barreda 97, Fracc. Arboles, Culiacan, Sinaloa, Mexico; c/o MINERA LA CASTELLANA Y ANEXAS S.A. DE C.V., Culiacan, Sinaloa, Mexico; DOB 22 May 1961; POB Navolato, Sinaloa, Mexico; alt. POB Culiacan, Sinaloa, Mexico; citizen Mexico; nationality Mexico; C.U.R.P. AEBA610522MSLRRN18 (Mexico); alt. C.U.R.P. AEBA610522MSLRRN00 (Mexico); R.F.C. AEBA610522 (Mexico) (individual) [SDNTK]

ARCE FLORES, Lorenzo, c/o QUINTA REAL JARDIN SOCIAL Y DE EVENTOS, S.A. DE C.V., Tijuana, Baja California, Mexico; c/o MULTICAJA DE TIJUANA, S.A. DE C.V.,, Tijuana,, Baja California, Mexico; c/o MODULO DE CAMBIOS, Tijuana, Baja California, Mexico; c/o PROMOTORA FIN, S.A., Tijuana, Baja California, Mexico; Avenida Madero No. 1010, Tijuana,, Baja California, Mexico; 750 Brookstone Road #201, Chula Vista, CA 91913; c/o CAJA AMIGO EXPRESS S.A. DE C.V., Chula Vista, CA 91910; c/o OPERADORA DE CAJA Y SERVICIOS, S.A. DE C.V., Tijuana, Baja California, Mexico; c/o A.L.S. FINANCIAL, INC., Coronado, CA 92178; Carillo Puerto, Calle 2025, 21B, Zona Central, Tijuana, Baja California, Mexico; c/o CAJA AMIGO EXPRESS, S.A. DE C.V., Tijuana, Baja California, Mexico; c/o PATRICIA CASA DE CAMBIO, Tijuana, Baja California, Mexico; DOB 6 May 1931; alt. DOB 1 May 1941; alt. DOB 5 May 1941; alt. DOB 6 May 1941; POB Mexicali, Baja California, Mexico; citizen Mexico; nationality Mexico; R.F.C. AEFL–410506-MS7 (Mexico) (individual) [SDNTK]

ARCE GARCIA, Rodrigo Alberto, c/o AGRO MASCOTAS S.A., Bogota, Colombia; DOB 9 Jun 1963; Cedula No. 16699556 (Colombia); Passport 16699556 (Colombia) (individual) [SDNT]

ARCE JARAMILLO, Melba Rosa, Calle Culiacan 101 Int. 702 Col. La Condesa, Mexico City, Mexico; Calle Auehuetes No. 1320 Col. Lomas de Tecamachalco, Mexico City, Mexico; c/o AEROCOMERCIAL ALAS DE COLOMBIA, Bogota, Colombia; DOB 17 Nov 1964; POB Cali, Colombia; Cedula No. 31945032 (Colombia); Passport AD369724 (Colombia); alt. Passport AI666987 (Colombia); alt. Passport AE869914 (Colombia); alt. Passport PP31235 (Colombia) (individual) [SDNT]

ARCE PINA, Araceli, c/o QUINTA REAL JARDIN SOCIAL Y DE EVENTOS S.A. DE C.V., Tijuana, Baja California, Mexico; DOB

28 Oct 1974; POB Baja California, Mexico; citizen Mexico; nationality Mexico; C.U.R.P. AEPA741028MBCRXR07 (Mexico) (individual) [SDNTK]

ARCE PINA, Roberto, 2830 Paradise Ridge Court, Chula Vista, CA 91915; c/o CAJA AMIGO EXPRESS S.A. DE C.V., Chula Vista, CA 91910; c/o GRUPO ARIAS-ARCE AGENCIA DE LOCALIZACION DE VEHICULOS, S. DE R.L., Tijuana, Baja California, Mexico; 750 Brookstone Road #201, Chula Vista, CA 91913; 660 Bay Boulevard, Suite 205, Chula Vista, CA 91910; c/o STRONG LINK DE MEXICO, S.A. DE C.V., Tijuana, Baja California, Mexico; c/o GRUPO INMOBILIARIO PROFESIONAL BAJA, S.A. DE C.V., Tijuana, Baja California, Mexico; c/o GLOBAL FUNDING SERVICES, CORP., Chula Vista, CA 91910; DOB 7 Jun 1971; POB Sonora, Mexico; citizen Mexico; nationality Mexico; C.U.R.P. AEPR710607HSRRXB00 (Mexico); Doing business as GLOBAL FUNDING SERVICES, CORP. at 660 Bay Blvd. Suite 205, Chula Vista, CA 91910. Incorporated in California on 4/24/2002 (No. C2288795) (individual) [SDNTK]

ARCHI CENTRE I.C.E. LIMITED, 3 Mandeville Place, London, United Kingdom [IRAQ2]

ARCHICONSULT LIMITED, 128 Buckingham Place, London 5, United Kingdom [IRAQ2]

ARDILA A., Gabriel, c/o CAJA SOLIDARIA, Bogota, Colombia; c/o COOPIFARMA, Bucaramanga, Colombia; c/o COPSERVIR LTDA., Bogota, Colombia; Carrera 100 No. 44B–10 ap. 102, Bogota, Colombia; Cedula No. 91177297 (Colombia) (individual) [SDNT]

ARDILA HUYO, Jorge Armando, c/o OBURSATILES S.A., Cali, Colombia; c/o GALAVIZ CORPORATION, LTD., Cali, Colombia; c/o A G REPRESENTACIONES LTDA., Cali, Colombia; c/o GALAVIZ CORPORATION, LTD., Miami, FL; c/o GALAVIZ CORPORATION, LTD., Nassau, Bahamas, The; c/o INTERNACIONAL DE DIVISAS S.A., LLC, Miami, FL; c/o VALORCORP S.A., Bogota, Colombia; c/o INTERNACIONAL DE DIVISAS S.A., Cali, Colombia; DOB 7 Feb 1960; Cedula No. 16448389 (Colombia); Passport 16448389 (Colombia) (individual) [SDNT]

ARDILA HUYO, Luis Alejandro, c/o OBURSATILES S.A., Cali, Colombia; c/o GALAVIZ CORPORATION, LTD., Miami, FL; c/o INTERNACIONAL DE DIVISAS S.A., Cali, Colombia; c/o A G REPRESENTACIONES LTDA., Cali, Colombia; c/o GALAVIZ CORPORATION, LTD., Nassau, Bahamas, The; c/o VALORCORP S.A., Bogota, Colombia; c/o ARDILA-MARMOLEJO, LTD., Nassau, Bahamas, The; c/o GALAVIZ CORPORATION, LTD., Cali, Colombia; c/o INTERNACIONAL DE DIVISAS S.A., LLC, Miami, FL; DOB 4 Jan 1962; Cedula No. 16670574 (Colombia); Passport AF924686 (Colombia) (individual) [SDNT]

ARDILA PICO, Rosalba, c/o COMUDROGAS LTDA., Bucaramanga, Colombia; Cedula No. 63332705 (Colombia) (individual) [SDNT]

ARDILA-MARMOLEJO, LTD. (f.k.a. HUYO-GIRALDO, LTD.), Nassau, Bahamas, The; Business Registration Document # 88,046 B (Bahamas, The) [SDNT]

ARELLANO FELIX ORGANIZATION (a.k.a. AFO; a.k.a. TIJUANA CARTEL), Mexico [SDNTK]

ARELLANO FELIX, Benjamin Alberto; DOB 12 Mar 1952; alt. DOB 11 Aug 1955; alt. DOB 8 Nov 1954; POB Mexico (individual) [SDNTK]

ARELLANO FELIX, Eduardo Ramon (a.k.a. ARELLANO FELIX, Javier Eduardo); DOB 10 Nov 1956; POB Mexico (individual) [SDNTK]

ARELLANO FELIX, Enedina (a.k.a. ARELLANO FELIX DE TOLEDO, Enedina), c/o Farmacia Vida Suprema, S.A. DE C.V., Tijuana, Baja California, Mexico; DOB 12 Apr 1961 (individual) [SDNTK]

ARELLANO FELIX, Francisco Javier (a.k.a. ARELLANO FELIX, Javier; a.k.a. BELTRAN MEZA, Ramon; a.k.a. DIAZ MEDINA, Javier; a.k.a. LARA ALVAREZ, Jose Luis); DOB 21 Nov 1969; alt. DOB 12 Dec 1969; POB Culiacan, Sinaloa, Mexico (individual) [SDNTK]

ARELLANO FELIX, Ramon Eduardo (a.k.a. COMACHO RODRIGUES, Gilberto; a.k.a. TORRES MENDEZ, Ramon); DOB 31 Aug 1964; POB Mexico (individual) [SDNTK]

ARIAN BANK (a.k.a. ARYAN BANK), House 2, Street Number 13, Wazir Akbar Khan, Kabul, Afghanistan [NPWMD]

ARIAS BANALES, Jose de Jesus, Porfirio Diaz 8190 Juarez, Tijuana, Baja California C.P. 22150, Mexico; c/o GRUPO ARIAS-ARCE AGENCIA DE LOCALIZACION DE VEHICULOS S. DE R.L., Tijuana, Baja California, Mexico; c/o DISTRIBUIDOR AUTORIZADO TEQUILA 4 REYES, S. DE R.L., Tijuana, Baja California, Mexico; c/o CAJA AMIGO EXPRESS, S.A. DE C.V., Tijuana, Baja California, Mexico; DOB 25 Feb 1971; POB Baja California, Mexico; citizen Mexico; nationality Mexico; C.U.R.P. AIBJ70225HBCRXS07 (Mexico); R.F.C. IBJ–710225-MC9 (Mexico) (individual) [SDNTK]

ARIAS DE RESTREPO, Mariella, c/o MATERIAS PRIMAS Y SUMINISTROS S.A., Bogota, Colombia; c/o AGRO MASCOTAS S.A., Bogota, Colombia; c/o DISTRIBUIDORA AGROPECUARIA COLOMBIANA S.A., Cali, Colombia; DOB 19 Nov 1958; Cedula No. 38437571 (Colombia) (individual) [SDNT]

ARIAS GAMEZ, Johana Milena, c/o COOPERATIVA DE TRABAJO ASOCIADO ACTIVAR, Bogota, Colombia; c/o SOLUCIONES COOPERATIVAS, Bogota, Colombia; Calle 69 No. 10A–53, Bogota, Colombia; Carrera 32 No. 25–71, Bogota, Colombia; c/o CAJA SOLIDARIA, Bogota, Colombia; c/o COOPCREAR, Bogota, Colombia; c/o JYG ASESORES LTDA., Bogota, Colombia; DOB 6 Nov 1982; Cedula No. 52906667 (Colombia) (individual) [SDNT]

ARIAS RAMIREZ, Jhon Helmer, c/o IMPORTADORA Y COMERCIALIZADORA LTDA., Cali, Colombia; DOB 20 Jan 1972; Cedula No. 16796537 (Colombia) (individual) [SDNT]

ARION SHIPPING CO., LTD., 60 South Street, Valletta, Malta [CUBA]

ARISTIZABAL ATEHORTUA, Jaime Alberto, c/o INVERSIONES MIGUEL RODRIGUEZ E HIJO, Cali, Colombia; c/o COLOR 89.5 FM STEREO, Cali, Colombia; c/o RADIO UNIDAS FM S.A., Cali, Colombia; c/o DERECHO INTEGRAL Y CIA. LTDA., Cali, Colombia; c/o REVISTA DEL AMERICA LTDA., Cali, Colombia; DOB 11 Oct 1968; Cedula No. 16756325 (Colombia) (individual) [SDNT]

ARIZA CHAVEZ, Elder, c/o SUPERGEN LTDA., Bucaramanga, Colombia; DOB 22 Jul 1972; Cedula No. 79183205 (Colombia); Passport 79183205 (Colombia) (individual) [SDNT]

ARIZA OLIVERA, Joaquin, c/o LITOPHARMA, Barranquilla, Colombia; Cedula No. 8721438 (Colombia) (individual) [SDNT]

ARIZABALETA ARZAYUS, Phanor (a.k.a. ARIZABALETA ARZAYUS, Fanor), Carrera 9 No. 9S–35, Buga, Colombia; Carrera 4 No. 12–41 of. 710, Cali, Colombia; Avenida 39 No. 15–22, Bogota, Colombia; c/o INVERSIONES ARIO LTDA., Cali, Colombia; Calle 110 No. 30–45, Bogota, Colombia; c/o CONSTRUCTORA ALTOS DEL RETIRO LTDA., Bogota, Colombia; DOB 12 May 1938; Cedula No. 2879530 (Colombia) (individual) [SDNT]

ARIZONA S.A., Carrera 8N No. 17A–12, Cartago, Colombia; NIT # 836000489–0 (Colombia) [SDNT]

ARJONA ALVARADO, Rafael Guillermo, c/o ALPHA PHARMA S.A., Bogota, Colombia; c/o FARMATODO S.A., Bogota, Colombia; c/o LABORATORIOS BLAIMAR, Bogota, Colombia; c/o LABORATORIOS KRESSFOR DE COLOMBIA S.A., Bogota, Colombia; DOB 28 Jun 1961; Cedula No. 19442698 (Colombia) (individual) [SDNT]

ARLONE FACELLI, Roberto, c/o DISTRIBUIDORA DE DROGAS CONDOR S.A., Bogota, Colombia; DOB 24 Oct 1959; Cedula No. 16632415 (Colombia) (individual) [SDNT]

ARMAGEDON S.A., Factoria La Rivera, La Union, Valle, Colombia; NIT # 800112221–4 (Colombia) [SDNT]

ARMAMENT INDUSTRIES GROUP (a.k.a. ''AIG—ARMAMENT INDUSTRIES GROUP''), Pasdaran Ave., P.O. Box 19585/777, Tehran, Iran; Sepah Islam Road, Karaj Special Road Km 10, Iran [NPWMD]

ARMANDO JAAR Y CIA. S.C.S., Carrera 74 No. 76–150, Barranquilla, Colombia; NIT # 890114337–6 (Colombia) [SDNT]

ARMED ISLAMIC GROUP (a.k.a. AL-JAMA'AH AL-ISLAMIYAH AL-MUSALLAH; a.k.a. GIA; a.k.a. GROUPEMENT ISLAMIQUE ARME) [FTO] [SDGT]

ARMENTA ZAVALA, Arnoldo Humberto, Av. Pte. A. de Sta. Na. 21741, Colonia Infonavit Presidentes, Tijuana, Baja California CP 22576, Mexico; c/o CASA DE EMPENO RIO TIJUANA, S.A. DE C.V., Tijuana, Baja California, Mexico; DOB 12 Nov 1971; R.F.C. AEZA–711112-AA5 (Mexico) (individual) [SDNTK]

ARMY OF THE REPUBLIC OF ILIRIDA (a.k.a. ARI) [BALKANS]

ARQUITECTOS UNIDOS LTDA., Calle 22N No. 5A–75, Cali, Colombia; NIT # 805022512–4 (Colombia) [SDNT]

ARREOLA GOMEZ, Guadalupe Armando, c/o CORRALES SAN IGNACIO S.P.R. DE R.L. DE C.V., Saucillo, Chihuahua, Mexico;

Mexico; DOB 25 Sept 1956; POB Saucillo, Chihuahua, Mexico; citizen Mexico; nationality Mexico; C.U.R.P. AEGG560925HCHRMD05 (Mexico); R.F.C. AEGG560925 (Mexico) (individual) [SDNTK]

ARRIOLA LUNA, Oscar Ignacio (a.k.a. ARREOLA LUNA, Oscar Ignacio), Mexico; c/o CORRALES SAN IGNACIO S.P.R. DE R.L. DE C.V., Saucillo, Chihuahua, Mexico; DOB 06 Apr 1994; POB Chihuahua, Chihuahua, Mexico; citizen Mexico; nationality Mexico; C.U.R.P. AELO940406HCHRNS04 (Mexico); alt. C.U.R.P. AILO940406HCHRNS06 (Mexico) (individual) [SDNTK]

ARRIOLA LUNA, Paola (a.k.a. ARREOLA LUNA, Paola), Mexico; c/o CORRALES SAN IGNACIO S.P.R. DE R.L. DE C.V., Saucillo, Chihuahua, Mexico; DOB 26 Jan 1986; POB Chihuahua, Chihuahua, Mexico; citizen Mexico; nationality Mexico; C.U.R.P. AILP860126MCHRNL06 (Mexico) (individual) [SDNTK]

ARRIOLA MARQUEZ ORGANIZATION, Mexico [SDNTK]

ARRIOLA MARQUEZ, Edgar Fernando (a.k.a. ARREOLA MARQUEZ, Edgar), c/o AUTO EXPRESS DORADOS S.A. DE C.V., Saucillo, Mexico; c/o GASOLINERAS SAN FERNANDO S.A. DE C.V., Saucillo, Mexico; 5th & Mina No. 10, Saucillo, Chihuahua, Mexico; DOB 23 Nov 1973; POB Delicias, Chihuahua, Mexico; citizen Mexico; nationality Mexico; R.F.C. AIME–731123–115 (Mexico) (individual) [SDNTK]

ARRIOLA MARQUEZ, Luis Raul (a.k.a. ARREOLA MARQUEZ, Luis Raul), Calle Sierra San Diego No. 2502, Fraccionamiento Santa Fe Chihuahua, Chihuahua, Mexico; c/o AUTO EXPRESS DORADOS S.A. DE C.V., Saucillo, Mexico; c/o INMOBILIARIA EL PRESON S.A. DE C.V., Chihuahua, Mexico; c/o INDIO VITORIO S. DE P.R. DE R.L. DE C.V., Saucillo, Mexico; Avenida Octava No. 72, Saucillo, Chihuahua, Mexico; c/o CHIHUAHUA FOODS S.A. DE C.V., Cuauhtemoc, Mexico; DOB 09 May 1971; POB Saucillo, Chihuahua, Mexico; citizen Mexico; nationality Mexico; C.U.R.P. AIML710509HCHRRS09 (Mexico); alt. C.U.R.P. AEML710509HCHRRS07 (Mexico); R.F.C. AIML–710509-V89 (Mexico); alt. R.F.C. AEML–710509-Q27 (Mexico) (individual) [SDNTK]

ARRIOLA MARQUEZ, Miguel Angel (a.k.a. ARREOLA MARQUEZ, Miguel Angel), c/o INMOBILIARIA EL ESCORPION DEL NORTE S.A. DE C.V., Mexico; Calle Mina No. 15, Saucillo, Chihuahua, Mexico; c/o CORRALES SAN IGNACIO L.L.C., Presidio, TX; c/o RIO GRANDE STOCKYARDS, INC., Presidio, TX; c/o AUTO EXPRESS DORADOS S.A. DE C.V., Saucillo, Chihuahua, Mexico; c/o DEL NORTES CARNES FINAS SAN IGNACIO S.A. DE C.V., Mexico; Carretera Camargo-Ojinaga Km. 2, La Aurora, Camargo, Chihuahua, Mexico; c/o CORRALES SAN IGNACIO S.P.R. DE R.L. DE C.V., Mexico; DOB 15 Dec 1967; POB Chihuahua, Mexico; citizen Mexico; nationality Mexico; C.U.R.P. AIMM67125HCHRRG06 (Mexico) issued 1968; R.F.C. AIMM-671215–387 (Mexico) (individual) [SDNTK]

ARRIOLA MARQUEZ, Oscar Arturo (a.k.a. ARREOLA MARQUEZ, Oscar Arturo), c/o DEL NORTES CARNES FINAS SAN IGNACIO S.A. DE C.V., Mexico; c/o CORRALES SAN IGNACIO L.L.C., Presidio, TX; c/o RIO GRANDE STOCKYARDS, INC., Presidio, TX; Avenida Sexta No. 68, Saucillo, Chihuahua, Mexico; c/o CORRALES SAN IGNACIO S.P.R. DE R.L. DE C.V., Mexico; c/o AUTO EXPRESS DORADOS S.A. DE C.V., Saucillo, Chihuahua, Mexico; c/o INMOBILIARIA EL ESCORPION DEL NORTE S.A. DE C.V., Mexico; DOB 06 Nov 1968; alt. DOB 11 Jun 1968; POB Chihuahua, Mexico; citizen Mexico; nationality Mexico; C.U.R.P. AIMO681106HCHRRS01 (Mexico) issued 1969; R.F.C. AIMO–681106–9F7 (Mexico) (individual) [SDNTK]

ARROYAVE RUIZ, Elkin Alberto (a.k.a. LOPEZ, Cesar), Carrera 9 No. 71D-10, Cali, Colombia; DOB 3 Sep 1968; POB Caucasia, Antioquia, Colombia; Cedula No. 4652820 (Colombia) (individual) [SDNTK]

ARSENOVIC, Djojo; DOB 6 Jan 1952; POB Donje Crnjelovo, Bosnia-Herzegovina (individual) [BALKANS]

ARTURO QUINONEZ LTDA. (a.k.a. RESTAURANTE SANTA COLOMBIA), Calle 10 No. 46–120, Cali, Colombia; NIT # 900093492–3 (Colombia) [SDNT]

ARZALLUS TAPIA, Eusebio; DOB 8 Nov 1957; POB Regil, Guipuzcoa Province, Spain; D.N.I. 15.927.207 (Spain); Member ETA (individual) [SDGT]

ASAT TRUST REG., Altenbach 8, Vaduz 9490, Liechtenstein [SDGT]

ASBAT AL-ANSAR [FTO] [SDGT]

ASESORES CONSULTORES ASOCIADOS LTDA. (a.k.a. ACA LTDA.), Carrera 100 No. 11–90 Ofc. 403, Cali, Colombia; NIT # 805007818–1 (Colombia) [SDNT]

ASESORIA Y SOLUCIONES GRUPO CONSULTOR S.A., Calle 15 Norte No. 6N–34 ofc. 404, Cali, Colombia; NIT # 805018000–1 (Colombia) [SDNT]

ASESORIAS COSMOS LTDA., Carrera 40 No. 6–50 apt. 13–01, Cali, Colombia [SDNT]

ASESORIAS DE INGENIERIA EMPRESA UNIPERSONAL (a.k.a. ASING E.U.), Calle 29 Norte No. 6N–43, Cali, Colombia; NIT # 805005185–7 (Colombia) [SDNT]

ASESORIAS ECONOMICAS MUNOZ SANTACOLOMA E.U. (a.k.a. ASEMS E.U.), Calle 18 No. 106–98 of. 207, Cali, Colombia; NIT # 805012381–3 (Colombia) [SDNT]

ASESORIAS OCUPACIONALES LTDA., Carrera 66 No. 11–129, Cali, Colombia; NIT # 800040728–6 (Colombia) [SDNT]

ASESORIAS PROFESIONALES ESPECIALIZADAS EN NEGOCIOS E.U. (a.k.a. ASPEN E.U.), Calle 9 No. 46–69, Cali, Colombia; NIT # 805020437–0 (Colombia) [SDNT]

ASESORIAS PROFESIONALES LTDA., Calle 21 No. 15–26, Ofc. 304, Armenia, Quindio, Colombia; NIT # 801000611–6 (Colombia) [SDNT]

ASH TRADING, INC., 14420 NW 16TH St., Pembroke Pines, FL 33028; Business Registration Document # P01000078571 (United States); US FEIN 65–1128351 [SDNT]

ASHRAF, Haji Muhammad (a.k.a. ASHRAF, Haji M.); DOB 1 Mar 1965; Passport A–374184 (Pakistan) (individual) [SDGT]

ASIA LIGHT CO. LTD., 15/19 Kunjan Rd., S Aung San Std, Rangoon, Burma; Mingalar Taung Nyunt Tower, 6 Upper Pansoden Street, Aung San Stadium Eastern Wing, Rangoon, Burma [BURMA]

ASIA MARINE NETWORK PTE. LTD. (a.k.a. ASIAN PERFECT MARINE PTE. LTD.; a.k.a. IRISL ASIA PTE. LTD.), 200 Middle Road, #14–01 Prime Centre 188980, Singapore [NPWMD]

ASIA WORLD CO. LTD. (a.k.a. ASIA WORLD), 61–62 Bahosi Development Housing, Wadan St., Lanmadaw Township, Rangoon, Burma [BURMA]

ASIA WORLD INDUSTRIES LTD., No. 21/22 Upper Pansodan St., Aung San Stadium (East Wing), Mingalar Taung Nyunt, Rangoon, Burma [BURMA]

ASIA WORLD PORT MANAGEMENT CO. LTD (a.k.a. ASIA WORLD PORT MANAGEMENT; a.k.a. ''PORT MANAGEMENT CO. LTD.''), 61–62 Wartan St, Bahosi Yeiktha, Rangoon, Burma [BURMA]

ASISTENCIA PROFESIONAL ESPECIALIZADA EN COLOMBIA LIMITADA (a.k.a. ASPRECOL LIMITADA), Avenida 11 Norte No. 7N–201 of. 202, Edificio Aleph, Cali, Colombia; NIT # 805021375–7 (Colombia) [SDNT]

ASKATASUNA (f.k.a. GESTORAS PRO-AMNISTIA), Spain [SDGT]

ASOCIACION CIVIL LOS PROMOTORES AERONAUTICOS, Jr. Los Robles 152, Oficina 7, San Martin de Porres, URB Valdiviezo, Lima, Peru; RUC # 20336637733 (Peru) [SDNTK]

ASOCIACION TURISTICA INTERNACIONAL S.C.S. (f.k.a. LUIS A. HERNANDEZ Z Y CIA. S.C.S.), Carrera 35 No. 53–53, Bogota, Colombia; NIT # 890325040–4 (Colombia) [SDNT]

ASPOIR DEL PACIFICO Y CIA. LTDA., Cali, Colombia [SDNT]

ASSA CO. LTD., 6 Britania Place, Bath Street, St. Helier JE2 4SU, Jersey [NPWMD]

ASSA CORP. (a.k.a. ASSA), New York, NY; Tax ID No. 1368932 (United States) [NPWMD]

ASSALAYA SUGAR COMPANY LIMITED, Eastern Bank of White Nile River, near Rabak town (about 300 km from Khartoum, P.O. Box 511, Khartoum, Sudan [SUDAN]

ASSOCIATED ENGINEERS, United Kingdom [IRAQ2]

ASSOCIATION DE SECOURS PALESTINIENS (a.k.a. ASP; a.k.a. ASSOCIATION FOR PALESTINIAN AID; a.k.a. ASSOCIATION SECOUR PALESTINIEN; a.k.a. HUMANITARE HILFSORGANISATION FUR PALASTINA; a.k.a. LAJNA AL-IGHATHA AL-FILISTINI; a.k.a. PALESTINE RELIEF COMMITTEE; a.k.a. PALESTINIAN AID COUNCIL; a.k.a. PALESTINIAN AID ORGANIZATION; a.k.a. PALESTINIAN RELIEF SOCIETY; a.k.a. RELIEF ASSOCIATION FOR PALESTINE), Postfach 406, CH–4109 Basel, Switzerland; Gartnerstrasse 55, CH–4109 Basel, Switzerland; c/o Faical Yaakoubi, 7 rue de l'Ancien Port, CH–1201 Geneva, Switzerland [SDGT]

ASTAIZA TACUMA, Luz Marina, c/o COMPANIA DE FOMENTO MERCANTIL

S.A., Cali, Colombia; c/o GESTORA MERCANTIL S.A., Cali, Colombia; c/o GEOPLASTICOS S.A., Cali, Colombia; DOB 10 Nov 1957; POB Cali, Valle, Colombia; Cedula No. 31271034 (Colombia); Passport 31271034 (Colombia) (individual) [SDNT]

ATAMALLO SHIPPING CO. LTD. (a.k.a. ANTAMALLO SHIPPING CO. LTD.), c/o EMPRESA DE NAVEGACION MAMBISA, Apartado 543, San Ignacio 104, Havana, Cuba [CUBA]

ATBARA CEMENT COMPANY LIMITED, P.O. Box 36, Atbara, Sudan [SUDAN]

ATC LTD., Gibraltar, United Kingdom [LIBERIA]

A-TEAM CHEMICALS COMPANY LTD., 95/53 Soi Lasal, Sukhumwit 105 Road, Bang Na, Phra Khanong district, Bangkok, Thailand [SDNTK]

ATENCIA PITALUA, Rafael Dario, c/o FUNDACION PARA LA PAZ DE CORDOBA, Monteria, Cordoba, Colombia; DOB 4 Feb 1963; Cedula No. 6889653 (Colombia) (individual) [SDNTK]

ATIA, Hachim K., 2 Stratford Place, London W1N 9AE, United Kingdom (individual) [IRAQ2]

ATIA, Hachim K., Hay Al-Adil Mahala-645, Zukak-8, No.-39, Baghdad, Iraq (individual) [IRAQ2]

ATIA, Hachim K., Lane 15, Area 902, Hai Al-Wahda, Baghdad, Iraq (individual) [IRAQ2]

ATLAS AIR CONDITIONING COMPANY LIMITED, 55 Roebuck House, Palace Street, London, United Kingdom [IRAQ2]

ATLAS EQUIPMENT COMPANY LIMITED, 55 Roebuck House, Palace Street, London, United Kingdom [IRAQ2]

ATOMIC ENERGY ORGANIZATION OF IRAN (a.k.a. SAZEMAN-E ENERGY ATOMI), P.O. Box 14144–1339, End of North Karegar Avenue, Tehran, Iran [NPWMD]

ATTAR; Vessel Registration Identification IMO 9074092 (vessel) [NPWMD]

ATWA, Ali (a.k.a. BOUSLIM, Ammar Mansour; a.k.a. SALIM, Hassan Rostom), Lebanon; DOB 1960; POB Lebanon; citizen Lebanon (individual) [SDGT]

ATWAH, Muhsin Musa Matwalli (a.k.a. ABDEL RAHMAN; a.k.a. ABDUL RAHMAN; a.k.a. AL-MUHAJIR, Abdul Rahman; a.k.a. AL-NAMER, Mohammed K.A.), Afghanistan; DOB 19 Jun 1964; POB Egypt; citizen Egypt (individual) [SDGT]

AUCHENBURG FARM, Nyamandlovu, Zimbabwe [ZIMBABWE]

AUDITORES ESPECIALIZADOS LTDA., Calle 93 No. 14–20 Ofc. 611, Bogota, Colombia; NIT # 830041980–1 (Colombia) [SDNT]

AUF, Awad Ibn (a.k.a. AUF, Awad Muhammad Ibn; a.k.a. AUF, Mohammed Ahmed Awad Ibn; a.k.a. AWF, Awad Ahmad Ibn; a.k.a. AWF, Awad Ibn; a.k.a. NAUF, Awad Mohammed Ahmed Ebni; a.k.a. OAF, Awad Mohamed Ahmed Ibn; a.k.a. OUF, Awad Mohamed Ahmed Ibn); DOB circa 1954; nationality Sudan; Head of Military Intelligence and Security (individual) [DARFUR]

AUM SHINRIKYO (a.k.a. A.I.C. COMPREHENSIVE RESEARCH INSTITUTE; a.k.a. A.I.C. SOGO KENKYUSHO; a.k.a. ALEPH; a.k.a. AUM SUPREME TRUTH) [FTO] [SDGT]

AUNG, Win (a.k.a. AUNG, Dagon Win; a.k.a. AUNG, U Win), c/o Dagon International Limited, Burma; c/o Dagon Timber Limited, Burma; DOB circa 1953; nationality Burma (individual) [BURMA] [JADE]

AUREAL INMOBILIARIA LTDA., Avenida 7 No. 112–38 of. 104, Bogota, Colombia [SDNT]

AURELIANO FELIX, Jorge (a.k.a. ''MACUMBA''); DOB 15 Apr 1952; nationality Mexico (individual) [SDNTK]

AUREUM PALACE HOTELS AND RESORTS (a.k.a. AUREUEM PALACE HOTEL AND RESORT (BAGAN); a.k.a. AUREUEM PALACE HOTEL AND RESORT (NGAPALI); a.k.a. AUREUM PALACE HOTEL AND RESORT (NGWE SAUNG); a.k.a. AUREUM PALACE HOTEL AND RESORT GROUP CO. LTD.; a.k.a. AUREUM PALACE HOTEL RESORT; a.k.a. AUREUM PALACE RESORTS; a.k.a. AUREUM PALACE RESORTS AND SPA), Thandwe, Rakhine, Burma; No. 41 Shwe Taung Gyar Street, Bahan Township, Yangon, Burma [BURMA]

AUTO EXPRESS DORADOS S.A. DE C.V., Avenida Cristobal Colon, Saucillo, Chihuahua, Mexico; Panamericana 110 Colonia Altavista, Saucillo, Chihuahua C.P. 33620, Mexico [SDNTK]

AUTOMOBILE CORPORATION, Khartoum, Sudan [SUDAN]

AVALON, S.A., Colon Free Zone, Panama [CUBA]

AVIANDINA S.A.C., Avenida Jose Pardo 601, Lima, Peru; RUC # 20423916541 (Peru) [SDNTK]

AVIATRANS ANSTALT (a.k.a. AVIATRANS ESTABLISHMENT), Ruggell, Liechtenstein [IRAQ2]

AVILA DE MONDRAGON, Ana Dolores, c/o INVERSIONES Y CONSTRUCCIONES ABC S.A., Cali, Colombia; c/o COMPAX LTDA., Cali, Colombia; c/o INVERSIONES Y CONSTRUCCIONES COSMOVALLE LTDA., Cali, Colombia; DOB 22 Dec 1911; Cedula No. 29183223 (Colombia) (individual) [SDNT]

AVILA GONZALEZ, Humberto, c/o ADMINISTRADORA DE SERVICIOS VARIOS CALIMA S.A., Cali, Colombia; c/o CHAMARTIN S.A., Cali, Colombia; DOB 2 Apr 1960; Cedula No. 14882052 (Colombia); Passport 14882052 (Colombia) (individual) [SDNT]

AVILA LOPEZ, Gabriel, c/o ADMINISTRADORA DE SERVICIOS VARIOS CALIMA S.A., Cali, Colombia; c/o CHAMARTIN S.A., Cali, Colombia; DOB 3 Aug 1963; Cedula No. 16689631 (Colombia); Passport 16689631 (Colombia) (individual) [SDNT]

AVILA MIRANDA, Jorge Adalberto, Calle 52N No. 2D–29, Cali, Colombia; c/o CAUCALITO LTDA., Cali, Colombia; DOB 23 Apr 1950; Cedula No. 12534286 (Colombia) (individual) [SDNT]

AWDA, Abd Al Aziz; DOB 1946; Chief Ideological Figure of PALESTINIAN ISLAMIC JIHAD—SHIQAQI (individual) [SDT]

AWEYS, Dahir Ubeidullahi, Via Cipriano Facchinetti 84, Rome, Italy (individual) [SDGT]

AWEYS, Hassan Dahir (a.k.a. ALI, Sheikh Hassan Dahir Aweys; a.k.a. AWES, Shaykh Hassan Dahir); DOB 1935; citizen Somalia (individual) [SDGT]

AW-MOHAMED, Ahmed Abdi (a.k.a. ABUZUBAIR, Muktar Abdulrahim; a.k.a. AW MOHAMMED, Ahmed Abdi; a.k.a. ''ABU ZUBEYR''; a.k.a. ''GODANE''; a.k.a. ''GODANI''; a.k.a. ''SHAYKH MUKHTAR''); DOB 10 Jul 1977; POB Hargeysa, Somalia; nationality Somalia (individual) [SDGT]

AYARI, Chiheb Ben Mohamed (a.k.a. AL-AYARI, Chiheb Ben Mohamed Ben Mokhtar; a.k.a. ''HICHEM ABU HCHEM''), Via di Saliceto n.51/9, Bologna, Italy; DOB 19 Dec 1965; POB Tunis, Tunisia; nationality Tunisia; Passport L246084 issued 10 Jun 1996 expires 9 Jun 2001 (individual) [SDGT]

AYE, Maung; DOB 25 Dec 1937; citizen Burma; nationality Burma; Vice Senior General; Vice-Chairman of the State Peace and Development Council; Deputy Commander-in-Chief, Myanmar Defense Services (Tatmadaw); Commander-in-Chief, Myanmar Army (individual) [BURMA]

AYER SHWE WAH COMPANY LIMITED (a.k.a. AYE YAR SHWE WAH; a.k.a. AYER SHWE WA; a.k.a. AYEYA SHWE WAR COMPANY), 5 Pyay Road, Hlaing Township, Yangon, Burma [BURMA]

AYERAS, Ricardo Perez (a.k.a. AYERAS, Abdul Kareem; a.k.a. AYERAS, Abdul Karem; a.k.a. AYERAS, Abdul Karim; a.k.a. AYERAS, Khalil; a.k.a. AYERAS, Ricardo Abdulkareem; a.k.a. AYERAS, Ricardo Abdulkarim; a.k.a. AYERAS, Ricky; a.k.a. AYERS, Abdul Karim; a.k.a. MUJIB, Abdul; a.k.a. PEREZ, Isaac Jay Galang; a.k.a. PEREZ, Jay), 24 Paraiso Street, Barangay Poblacion, Mandaluyong City, Manila, Philippines; DOB 15 Sep 1973; POB 24 Paraiso Street, Barangay Poblacion, Mandaluyong City, Manila, Philippines; nationality Philippines (individual) [SDGT]

AZAM, Amir (a.k.a. SHEIKH MOHAMMED, Amir Azam), Dubai, United Arab Emirates; c/o A A TRADING FZCO, Dubai, United Arab Emirates; DOB 02 Nov 1971; POB Chiswick, England; citizen United Arab Emirates; Passport 039856039 (United Kingdom) (individual) [SDNTK]

AZIZ, Tariq (a.k.a. AZIZ, Tariq Mikhail); DOB 1 Jul 1936; POB Mosul or Baghdad, Iraq; nationality Iraq; Passport NO34409/129 issued July 1997; Deputy Prime Minister (individual) [IRAQ2]

AZIZAH, Sa'id Yusif Ali Abu (a.k.a. AZIZ, Sa'id Yusif Abu; a.k.a. 'AZIZ, Sa'ud Abu; a.k.a. AZIZA, Said Youssef Ali Abu; a.k.a. AZIZAT, Sa'id Yusif Ali Abu; a.k.a. HAMID, Abdul; a.k.a. ''AL-HAMID, Abd''; a.k.a. ''THERAB, Abu''; a.k.a. ''THURAB, Abu''; a.k.a. ''TURAB, Abu''); DOB 1958; POB Tripoli, Libya; Passport 87/437555 (Libya) (individual) [SDGT]

AZZA AIR TRANSPORT COMPANY LTD. (a.k.a. AZZA AVIATION COMPANY; a.k.a. AZZA TRANSPORT), German Culture Center, McNimer Street, P. O. Box 11586, Khartoum, Sudan [DARFUR]

B R C S.A. (a.k.a. BARRERA RIOS CAMACHO ADMINISTRACION Y FINANZAS S.A.), Calle 28N No. 6BN–54, Cali, Colombia; NIT # 900021843–7 (Colombia) [SDNT]

BA TAQWA FOR COMMERCE AND REAL ESTATE COMPANY LIMITED (n.k.a. HOCHBURG, AG), formerly c/o Asat Trust reg., Vaduz, Liechtenstein; Vaduz, Liechtenstein [SDGT]

BA'ASYIR, Abu Bakar (a.k.a. BAASYIR, Abu Bakar; a.k.a. BASHIR, Abu Bakar; a.k.a. ''ABDUS SAMAD''; a.k.a. ''ABDUS SOMAD''); DOB 17 Aug 1938; POB Jombang, East Java, Indonesia; nationality Indonesia (individual) [SDGT]

BAAZAOUI, Mondher (a.k.a. AL-BAAZAOUI, Mondher Ben Mohsen Ben Ali; a.k.a. ''HAMZA''), Via di Saliceto n.51/9, Bologna, Italy; DOB 18 Mar 1967; POB Kairouan, Tunisia; nationality Tunisia; Passport K602878 issued 5 Nov 1993 expires 9 Jun 2001 (individual) [SDGT]

BABANOUSA MILK PRODUCTS FACTORY, P.O. Box 16, Babanousa, Sudan [SUDAN]

BABBAR KHALSA INTERNATIONAL [SDGT]

BABIL INTERNATIONAL, Aeroport D'Orly, 94390 Orly Aerogare, France [IRAQ2]

BADAT, Sajid Mohammed (a.k.a. BADAT, Muhammed; a.k.a. BADAT, Saajid; a.k.a. BADAT, Sajid; a.k.a. BADAT, Sajid Muhammad; a.k.a. BADET, Muhammed; a.k.a. BADET, Saajid Mohammad; a.k.a. BADET, Sajid Muhammad; a.k.a. ''AL BRITAINI, Issa''; a.k.a. ''AL PAKISTANI, Abu Issa''; a.k.a. ''AL PAKISTANI, Issa''); DOB 28 Mar 1979; alt. DOB 8 Mar 1976; POB Pakistan; alt. POB Gloucester, United Kingdom; citizen United Kingdom; Passport 026725401 (United Kingdom); alt. Passport 703114075 (United Kingdom); Currently imprisoned in the United Kingdom (individual) [SDGT]

BADRI, Gabril Abdul Kareem (a.k.a. BAREY, Djibril Abdul Kareem; a.k.a. BARI, Gabril Abdul Karim; a.k.a. KAREEM, Djibril Abdul), Darfur, Sudan; DOB circa 1961; Colonel for the National Movement for Reform and Development (NMRD) (individual) [DARFUR]

BAEZA MOLINA, Carlos Alberto, c/o DERECHO INTEGRAL Y CIA. LTDA., Cali, Colombia; c/o INVERSIONES MIGUEL RODRIGUEZ E HIJO, Cali, Colombia; DOB 6 Mar 1958; Cedula No. 16621765 (Colombia) (individual) [SDNT]

BAHAJI, Said, Bunatwiete #23, Hamburg 21073, Germany; 12 Rue Descartes, Meknes, Morocco; Wiesendamm #135, Hamburg 22303, Germany; Marienstr #54, Hamburg 21073, Germany; DOB 15 Jul 1975; POB Haselunne, Lower Saxony, Germany; nationality Morocco; alt. nationality Germany (individual) [SDGT]

BAHAZIQ, Mahmoud Mohammad Ahmed (a.k.a. ABU 'ABD AL-'AZIZ; a.k.a. ABU ABDUL AZIZ; a.k.a. BAHAZIQ, Mahmoud; a.k.a. SHAYKH SAHIB); DOB 17 Aug 1943; alt. DOB 1944; alt. DOB 1943; POB India; nationality Saudi Arabia; Registration ID 4–6032–0048–1 (Saudi Arabia) (individual) [SDGT]

BAHMANYAR, Bahmanyar Morteza; DOB 31 Dec 1952; POB Tehran, Iran; Passport I0005159 (Iran); alt. Passport 10005159 (Iran) (individual) [NPWMD]

BAHNAM, Hikmat Jarjes (a.k.a. GARGEES, Hikmat), Baghdad, Iraq; nationality Iraq; Passport 035667 (Iraq) (individual) [IRAQ2]

BAJAGIC, Zvonko 'Duga Puska'; DOB 6 Sep 1953; POB Vlasenica, Bosnia-Herzegovina (individual) [BALKANS]

BALA, Haradin; DOB 10 Jun 1957; POB Gornja Koretica, Serbia and Montenegro; ICTY indictee (individual) [BALKANS]

BALDENEGRO BASTIDAS, Manuel Dario, c/o AGRICOLA GAXIOLA S.A. DE C.V., Hermosillo, Sonora, Mexico; DOB 11 Jan 1963; POB Hermosillo, Sonora, Mexico; alt. POB Distrito Federal, Mexico, Mexico; citizen Mexico; nationality Mexico; C.U.R.P. BABM630111HSLLSN16 (Mexico); alt. C.U.R.P. BABM630111HSLLSN08 (Mexico); Passport 260000406 (Mexico) (individual) [SDNTK]

BALLESTAS ARRIETA, Arturo Carlos, c/o CAJA SOLIDARIA, Bogota, Colombia; c/o COOMULCOSTA, Barranquilla, Colombia; c/o COPSERVIR LTDA., Bogota, Colombia; Cedula No. 8706711 (Colombia) (individual) [SDNT]

BAMBOO CREEK FARM, Shamva, Zimbabwe [ZIMBABWE]

BANANERA AGRICOLA S.A. (a.k.a. BANAGRICOLA S.A.), Carrera 2B No. 26–12, Santa Marta, Colombia; NIT # 800142651–6 (Colombia) [SDNT]

BANCO INTERNACIONAL DE DESARROLLO, C.A., Urb. El Rosal, Avenida Francisco de Miranda, Edificio Dozsa, Piso 8, Caracas C.P. 1060, Venezuela; RIF # J294640109 (Venezuela); SWIFT/BIC IDUNVECA; Banco Internacional de Desarrollo, C.A. is a separate and distinct entity from Banco Interamericano de Desarrollo, known in English as the Inter-American Development Bank (IADB), and from Banco Desarrollo Economico y Social De Venezuela (BANDES), an entity owned by the Government of Venezuela [NPWMD]

BANCO NACIONAL DE CUBA (a.k.a. BNC; a.k.a. NATIONAL BANK OF CUBA), Dai-Ichi Bldg. 6th Floor, 10–2 Nihombashi, 2-chome, Chuo-ku, Tokyo 103, Japan [CUBA]

BANCO NACIONAL DE CUBA (a.k.a. BNC; a.k.a. NATIONAL BANK OF CUBA), Federico Boyd Avenue & 51 Street, Panama City, Panama [CUBA]

BANCO NACIONAL DE CUBA (a.k.a. BNC; a.k.a. NATIONAL BANK OF CUBA), Avenida de Concha Espina 8, E–28036 Madrid, Spain [CUBA]

BANCO NACIONAL DE CUBA (a.k.a. BNC; a.k.a. NATIONAL BANK OF CUBA), Zweierstrasse 35, CH–8022 Zurich, Switzerland [CUBA]

BANDERAS, Aracelly, c/o AGROPECUARIA LA ROBLEDA S.A., Cali, Colombia; DOB 30 Nov 1955 (individual) [SDNT]

BANGKOK ARTI-FLORA DESIGN LIMITED PARTNERSHIP (a.k.a. HANG HUN SUAN CHAMKAT BANG KOK ATHI-FLORA DISAIN), 812/89 Ratchada Phisek Road, Din Daeng precinct, Huai Khwang district, Bangkok, Thailand [SDNTK]

BANGKOK SILK FLOWER COMPANY LTD., 277–279 Soi Thiam Ruammit, Ratchada Phisek Road, Huai Khwang district, Bangkok, Thailand [SDNTK]

BANK AL TAQWA LIMITED (a.k.a. AL TAQWA BANK; a.k.a. BANK AL TAQWA), P.O. Box N–4877, Nassau, Bahamas, The; c/o Arthur D. Hanna & Company, 10 Deveaux Street, Nassau, Bahamas, The [SDGT]

BANK KARGOSHAEE (a.k.a. KARGOSA'I BANK), 587 Mohammadiye Square, Mowlavi St., Tehran 11986, Iran [NPWMD]

BANK MELLAT, Cumhuriyet Bulvari No 88/A, PK 7103521, Konak, Izmir, Turkey; PO Box 375010, Amiryan Str #6, P/N–24, Yerevan, Armenia; PO Box 79106425, Ziya Gokalp Bulvari No 12, Kizilay, Ankara, Ankara, Turkey; 327 Forsat and Taleghani Avenue, Tehran 15817, Iran; Buyukdere Cad, Cicek Sokak No 1—1 Levent, Levent, Istanbul, Turkey; Keumkang Tower—13th & 14th Floor, 889–13 Daechi-Dong, Gangnam-Ku, Seoul 135–280, Korea, South; Head Office Bldg, 327 Taleghani Ave, Tehran 15817, Iran; all offices worldwide [IRAN] [NPWMD]

BANK MELLI IRAN (a.k.a. BANK MELLI; a.k.a. NATIONAL BANK OF IRAN), PO Box 2656, Liva Street, Abu Dhabi, United Arab Emirates; PO Box 459, Al Borj St, Sharjah, United Arab Emirates; Room 704–6, Wheelock Hse, 20 Pedder St, Central, Hong Kong; PO Box 1894, Baniyas St, Deira, Dubai City, United Arab Emirates; PO Box 1894, Al Wasl Rd, Jumeirah, Dubai, United Arab Emirates; 43 Avenue Montaigne, Paris 75008, France; PO Box 1888, Clock Tower, Industrial Rd, Al Ain Club Bldg, Al Ain, Abu Dhabi, United Arab Emirates; Postfach 112 129, Holzbruecke 2, D–20459, Hamburg, Germany; Unit 1703–4, 17th Floor, Hong Kong Club Building, 3 A Chater Road Central, Hong Kong; PO Box 2643, Ruwi, Muscat 112, Oman; Nobel Ave. 14, Baku, Azerbaijan; PO Box 11365–171, Ferdowsi Avenue, Tehran, Iran; Bank Melli Iran Bldg, 111 St 24, 929 Arasat, Baghdad, Iraq; PO Box 248, Hamad Bin Abdulla St, Fujairah, United Arab Emirates; PO Box 5270, Oman Street Al Nakheel, Ras Al-Khaimah, United Arab Emirates; PO Box 3093, Ahmed Seddiqui Bldg, Khalid Bin El-Walid St, Bur-Dubai, Dubai City 3093, United Arab Emirates; all offices worldwide [IRAN] [NPWMD]

BANK MELLI IRAN INVESTMENT COMPANY (a.k.a. BMIIC), Bldg 2, Nader Alley after Beheshi Forked Road, P.O. Box 15875–3898, Tehran 15116, Iran; Rafiee Alley, Nader Alley, 2 After Serahi Shahid Beheshti, Vali E Asr Avenue, Tehran, Iran; No. 2, Nader Alley, Vali-Asr Str., P.O. Box 3898–15875, Tehran, Iran; Business Registration Document # 89584 (Iran) [NPWMD]

BANK MELLI IRAN ZAO, Number 9/1, Ulitsa Mashkova, Moscow 103064, Russia [NPWMD]

BANK MELLI PRINTING AND PUBLISHING CO. (a.k.a. BANK MELLI PRINTING CO.), Km 16 Karaj Special Road, Tehran, Iran; 18th Km Karaj Special Road, P.O. Box 37515–183, Tehran, Iran; Business Registration Document # 382231 (Iran) [NPWMD]

BANK OF KHARTOUM (a.k.a. BANK OF KHARTOUM GROUP), P.O. Box 2732, Khartoum, Sudan; P.O. Box 408, Barlaman Avenue, Khartoum, Sudan; El Dinder, Sudan; El Mazmoum, Sudan; P.O. Box 12, Kosti, Sudan; Sawakin, Sudan; Wadi Halfa, Sudan; P.O. Box 880, Khartoum, Sudan; P.O. Box 131, Wad Medani, Sudan; P.O.

Box 89, Atbara, Sudan; Tokar, Sudan; Assalaya, Sudan; Karkoug, Sudan; University of Khartoum, Khartoum, Sudan; P.O. Box 241, Port Sudan, Sudan; Abugaouta, Sudan; El Dain, Sudan; El Damazeen, Sudan; El Roseirs, Sudan; El Suk el Shabi, Sudan; Kassala, Sudan; Shendi, Sudan; Singa, Sudan; Tandalti, Sudan; P.O. Box 312, Khartoum, Sudan; P.O. Box 67, Omdurman, Sudan; Berber, Sudan; Dongola, Sudan; El Fow, Sudan; El Garia, Sudan; Halfa el Gadida, Sudan; Karima, Sudan; Omdurman P.O. Square, P.O. Box 341, Khartoum, Sudan; Sharia el Murada, Khartoum, Sudan; P.O. Box 1008, Khartoum, Sudan; Abu Hammad, Sudan; El Damer, Sudan; El Fashir, Sudan; El Ghadder, Sudan; P.O. Box 220, El Obeid, Sudan; Sharia el Barlaman, P.O. Box 922, Khartoum, Sudan; Rufaa, Sudan; Tamboul, Sudan; El Gadarit, Sudan; El Managil, Sudan; Sharia el Gama'a, P.O. Box 880, Khartoum, Sudan; Suk el Arabi, P.O. Box 4160, Khartoum, Sudan; Rabak, Sudan; El Daba, Sudan; El Dilling, Sudan; El Rahad, Sudan; Sharia el Gamhoria, P.O. Box 312, Khartoum, Sudan; Tayar Murad, P.O. Box 922, Khartoum, Sudan; P.O. Box 135, Nyala, Sudan [SUDAN]

BANK OF SUDAN, Atbara, Sudan; Wau, Sudan; Sharia El Gamaa, P.O. Box 313, Khartoum, Sudan; P.O. Box 34, Port Sudan, Sudan; P.O. Box 27, El Obeid, Sudan; Nyala, Sudan; P.O. Box 73, Kosti, Sudan; Wad Medani, Sudan; P.O. Box 136, Juba, Sudan [SUDAN]

BANK SADERAT IRAN (a.k.a. BANK SADERAT PLC; a.k.a. IRAN EXPORT BANK), PO Box 4308, 25–29 Venizelou St, Athens, Attica GR 105 64, Greece; 1st Floor, Alrose Bldg, Verdun—Rashid Karame St, Beirut, Lebanon; PO Box 700, Abu Dhabi, United Arab Emirates; Bur Dubai, Khaled Bin Al Walid St, Dubai City, United Arab Emirates; Sheikh Zayed Rd, Dubai City, United Arab Emirates; PO Box 316, Bank Saderat Bldg, Alaroda St, Borj Ave, Sharjah, United Arab Emirates; 16 rue de la Paix, Paris 75002, France; Alghobeiri Branch—Aljawhara Bldg, Ghobeiry Blvd, Beirut, Lebanon; PO Box 4425, Salwa Rd, Doha, Qatar; PO Box 1140, Al-Am Road, Al-Ein, Al Ain, Abu Dhabi, United Arab Emirates; Postfach 112227, Deichstrasse 11, 20459, Hamburg, Germany; PO Box 5126, Beirut, Lebanon; PO Box 1269, Muscat 112, Oman; PO Box 4182, Murshid Bazar Branch, Dubai City, United Arab Emirates; 5 Lothbury, London EC2R 7HD, United Kingdom; Postfach 160151, Friedenstr 4, D–60311, Frankfurt am Main, Germany; 3rd Floor, Aliktisad Bldg, Ras El Ein Street Baalbak, Baalbak, Lebanon; Saida Branch, Sida Riad Elsoleh St, Martyrs Sq, Saida, Lebanon; Borj Albarajneh Branch—20 Alholom Bldg, Sahat Mreijeh, Kafaat St, Beirut, Lebanon; PO Box 16, Liwara Street, Ajman, United Arab Emirates; Ground Floor Business Room, Building Banke Khoon Road, Harat, Afghanistan; No. 56, Opposite of Security Department, Toraboz Khan Str., Kabul, Afghanistan; 3rd Floor, Mteco Centre, Mar Elias, Facing Al Hellow Barrak, POB 5126, Beirut, Lebanon; 2nd Floor, No 181 Makhtoomgholi Ave, Ashgabat, Turkmenistan; PO Box 4182, Almaktoum Rd, Dubai City, United Arab Emirates; PO Box 15745–631, Bank Saderat Tower, 43 Somayeh Avenue, Tehran, Iran; PO Box 2256, Doha, Qatar; all offices worldwide [IRAN] [SDGT]

BANK SEPAH, Imam Khomeini Square, Tehran 1136953412, Iran; Hafenstrasse 54, D–60327, Frankfurt am Main, Germany; 64 Rue de Miromesnil, Paris 75008, France; Via Barberini 50, Rome, RM 00187, Italy; 17 Place Vendome, Paris 75008, France; all offices worldwide [IRAN] [NPWMD]

BANK SEPAH INTERNATIONAL PLC, 5–7 Eastcheap, London EC3M 1JT, United Kingdom [NPWMD]

BANOVIC, Predrag; DOB 28 Oct 1969; POB Prijedor, Bosnia-Herzegovina; ICTY indictee in custody (individual) [BALKANS]

BARAHONA CORDOBEZ, Jaime (a.k.a. BARONA CORDOBES, Jaime; a.k.a. BARONA CORDOBEZ, Jaime), Avenida Reforma 8–33 Zona 10, Guatemala City, Guatemala; c/o OVERSEAS TRADING COMPANY S.A., Guatemala City, Guatemala; 10 Calle 5–60 Zona 9, Guatemala City, Guatemala; Km. 16.5 El Salvador 169, Andalucia, Guatemala; DOB 1 Oct 1960; POB Guatemala; NIT # 953243–9 (Guatemala); Passport 16660729 (Guatemala) (individual) [SDNT]

BARAKA TRADING COMPANY, P.O. Box 3313, Dubai, United Arab Emirates [SDGT]

BARAKAAT BOSTON, 266 Neponset Ave., Apt 43, Dorchester, MA 02122–3224 [SDGT]

BARAKAAT CONSTRUCTION COMPANY, P.O. Box 3313, Dubai, United Arab Emirates [SDGT]

BARAKAAT GROUP OF COMPANIES, P.O. Box 3313, Dubai, United Arab Emirates; Mogadishu, Somalia [SDGT]

BARAKAAT INTERNATIONAL, Hallbybacken 15, Spanga 70, Sweden [SDGT]

BARAKAAT INTERNATIONAL COMPANIES (BICO), Dubai, United Arab Emirates; Mogadishu, Somalia [SDGT]

BARAKAAT INTERNATIONAL FOUNDATION, P.O. Box 4036, Spanga, Sweden; Rinkebytorget 1, Spanga 04, Sweden [SDGT]

BARAKAAT INTERNATIONAL, INC., 1929 South 5th Street, Suite 205, Minneapolis, MN [SDGT]

BARAKAAT NORTH AMERICA, INC., 925 Washington St., Dorchester, MA; 2019 Bank St., Ottawa, Ontario, Canada [SDGT]

BARAKAAT RED SEA TELECOMMUNICATIONS, Guureeye, Somalia; Kowthar, Somalia; Bubaarag, Somalia; Xuuxuule, Somalia; Najax, Somalia; Carafaat, Somalia; Ala Aamin, Somalia; Nakhiil, Somalia; Huruuse, Somalia; Ticis, Somalia; Gufure, Somalia; Bossaso, Somalia; Raxmo, Somalia; Noobir, Somalia [SDGT]

BARAKAAT TELECOMMUNICATIONS COMPANY LIMITED (a.k.a. BTELCO), Bakara Market, Dar Salaam Buildings, Mogadishu, Somalia; Netherlands [SDGT]

BARAKAAT TELECOMMUNICATIONS COMPANY SOMALIA, LIMITED, P.O. Box 3313, Dubai, United Arab Emirates [SDGT]

BARAKAT BANK AND REMITTANCES, Mogadishu, Somalia; Dubai, United Arab Emirates [SDGT]

BARAKAT COMPUTER CONSULTING (BCC), Mogadishu, Somalia [SDGT]

BARAKAT CONSULTING GROUP (BCG), Mogadishu, Somalia [SDGT]

BARAKAT GLOBAL TELEPHONE COMPANY, Mogadishu, Somalia; Dubai, United Arab Emirates [SDGT]

BARAKAT IMPORT EXPORT LTDA, Iquique, Chile; Tax ID No. AABA 670850 Y [SDGT]

BARAKAT POST EXPRESS (BPE), Mogadishu, Somalia [SDGT]

BARAKAT REFRESHMENT COMPANY, Mogadishu, Somalia; Dubai, United Arab Emirates [SDGT]

BARAKAT WIRE TRANSFER COMPANY, 4419 S. Brandon St., Seattle, WA [SDGT]

BARAKAT, Assad Ahmad (a.k.a. BARAKAT, Assaad Ahmad; a.k.a. BARAKAT, Assad; a.k.a. BARAKAT, Assad Ahmed Muhammad; a.k.a. BARAKAT, Assad Hassan; a.k.a. BARAKAT, Jach Assad Ahmad; a.k.a. HAJJ AS'AD AHMAD), Rua Rio Branco Lote 682, Quadra 13, Foz do Iguacu, Brazil; Rua Silva Jardim 290, Foz do Iguacu, Brazil; Rua Xavier Da Silva 535, Edificio Martin Terro, Apartment 301, Foz do Iguacu, Brazil; Piribebuy Y A. Jara, Ciudad del Este, Paraguay; Rue Taroba 1005, Beatriz Menez Building, Foz do Iguacu, Brazil; Apartment 111, Panorama Building, Iquique, Chile; Arrecife Apartment Building, Iquique, Chile; DOB 25 Mar 1967; POB Lebanon (individual) [SDGT]

BARAKAT, Hamzi Ahmad (a.k.a. BARAKAT, Hamza Ahmad; a.k.a. BARAKAT, Hamze Ahmad; a.k.a. BARAKAT, Hamzi Muhammad); DOB 10 Jan 1963; POB Rubtlatine, Lebanon; alt. POB Beirut, Lebanon; citizen Lebanon (individual) [SDGT]

BARAKAT, Hatim Ahmad (a.k.a. BARAKAT, Hatam Ahmad; a.k.a. BARAKAT, Hatem Ahmad; a.k.a. BARAKAT, Hattem Ahmad; a.k.a. BARAKAT, Hotem Ahmad); DOB 25 Sep 1961; POB Mousaitbe, Lebanon; citizen Lebanon; alt. citizen Paraguay; Identification Number 2.194.975 (Paraguay); alt. Identification Number 2.194.575 (Paraguay); Passport 183319 (Paraguay); alt. Passport 148842 (Paraguay); alt. Passport 106318 (Paraguay) (individual) [SDGT]

BARAKAT, Mohammad Fayez; DOB 11 Mar 1969; POB Rubtlatine, Lebanon; citizen Lebanon; alt. citizen Paraguay; Identification Number 2.121.948 (Paraguay) (individual) [SDGT]

BARAKO TRADING COMPANY LLC (a.k.a. BARAKA TRADING COMPANY), P.O. Box 3313, Dubai, United Arab Emirates [SDGT]

BARCO RUIZ, Eduardo, c/o FOGENSA S.A., Bogota, Colombia; DOB 26 May 1945; Cedula No. 5562182 (Colombia); Passport 5562182 (Colombia) (individual) [SDNT]

BARNEY CELAYA, Juan Diego, c/o MULTICAJA DE TIJUANA, S.A. DE C.V., Tijuana, Baja California, Mexico; c/o OPERADORA DE CAJA Y SERVICIOS, S.A. DE C.V., Tijuana, Baja California, Mexico; DOB 16 Mar 1959; POB Sonora, Mexico; citizen Mexico; nationality Mexico; C.U.R.P. BACJ590316HSRRLN01 (Mexico) (individual) [SDNTK]

BARON DIAZ, Carlos Arturo, c/o DISTRIBUIDORA MIGIL LTDA., Cali,

Colombia; c/o GRACADAL S.A., Cali, Colombia; DOB 22 Jul 1931; Cedula No. 49994 (Colombia) (individual) [SDNT]

BARONA DORADO, Fernando, c/o DISMERCOOP, Cali, Colombia; DOB 6 Jun 1963; Cedula No. 16688872 (Colombia) (individual) [SDNT]

BAROON SHIPPING COMPANY LIMITED, Haven Court, 5 Library Ramp, Gibraltar, United Kingdom [IRAQ2]

BARRAZA REYES, Raquel Emilia, c/o COPSERVIR LTDA., Bogota, Colombia; c/o CAJA SOLIDARIA, Bogota, Colombia; c/o COOMULCOSTA, Barranquilla, Colombia; Cedula No. 22636674 (Colombia) (individual) [SDNT]

BARRERA MARIN, Alvaro, Calle 56D No. 28B–73, Barrio Las Mercedes, Palmira, Valle, Colombia; c/o WORLD LINE SYSTEM S.A., Palmira, Valle, Colombia; c/o NEGOCIOS Y CAPITALES S.A., Pereira, Colombia; c/o COMERCIALIZADORA DE BIENES Y SERVICIOS ADMINISTRATIVOS Y FINANCIEROS S.A., Cali, Colombia; c/o CECEP EDITORES S.A., Cali, Colombia; c/o BARRERA RIOS NEGOCIOS INMOBILIARIOS E.U., Cali, Colombia; c/o APVA S.A., Cali, Colombia; c/o CIDCA, Bogota, Colombia; c/o CECEP S.A., Cali, Colombia; c/o ENSAMBLADORA COLOMBIANA AUTOMOTRIZ S.A., Barranquilla, Colombia; DOB 21 Nov 1940; POB Sevilla, Valle, Colombia; Cedula No. 6451857 (Colombia); Passport AG003135 (Colombia) (individual) [SDNT]

BARRERA RIOS NEGOCIOS INMOBILIARIOS E.U., Carrera 22 No. 5A–21, Cali, Colombia; NIT # 805030626–9 (Colombia) [SDNT]

BARRERA RIOS, Alfonso, c/o A K EDUCAL S.A. EDUCACION CON CALIDAD, Cali, Colombia; c/o A K DIFUSION S.A. PUBLICIDAD Y MERCADEO, Cali, Colombia; c/o NEGOCIOS Y CAPITALES S.A., Pereira, Colombia; c/o B R C S.A., Cali, Colombia; c/o CECEP EDITORES S.A., Cali, Colombia; Calle 14 Oeste No. 2B1–45 apto. 302E, Cali, Colombia; c/o ENSAMBLADORA COLOMBIANA AUTOMOTRIZ S.A., Barranquilla, Colombia; c/o ALFONSO BARRERA RIOS Y CIA S. EN C.S., Cali, Colombia; c/o CECEP S.A., Cali, Colombia; c/o APVA S.A., Cali, Colombia; c/o WORLD LINE SYSTEM S.A., Palmira, Valle, Colombia; c/o SERPROVIS S.A. SERVICIOS Y PROVISIONES, Cali, Colombia; c/o BARRERA RIOS NEGOCIOS INMOBILIARIOS E.U., Cali, Colombia; DOB 08 Dec 1975; POB Cali, Colombia; Cedula No. 79648943 (Colombia); Passport AJ963037 (Colombia) (individual) [SDNT]

BARRERA RIOS, Alvaro Enrique, c/o WORLD LINE SYSTEM S.A., Palmira, Valle, Colombia; c/o BARRERA RIOS NEGOCIOS INMOBILIARIOS E.U., Cali, Colombia; c/o APVA S.A., Cali, Colombia; c/o B R C S.A., Cali, Colombia; c/o ALFONSO BARRERA RIOS Y CIA. S. EN C.S., Cali, Colombia; Carrera 54A No. 5A–21, Cali, Colombia; c/o CECEP EDITORES S.A., Cali, Colombia; c/o A K DIFUSION S.A. PUBLICIDAD Y MERCADEO, Cali, Colombia; c/o A K EDUCAL S.A. EDUCACION CON CALIDAD, Cali, Colombia; c/o ENSAMBLADORA COLOMBIANA AUTOMOTRIZ S.A., Barranquilla, Colombia; c/o COMERCIALIZADORA DE BIENES Y SERVICIOS ADMINISTRATIVOS Y FINANCIEROS S.A., Cali, Colombia; c/o ALVARO ENRIQUE BARRERA RIOS Y CIA S. EN C.S., Cali, Colombia; c/o CECEP S.A., Cali, Colombia; c/o SERPROVIS S.A. SERVICIOS Y PROVISIONES, Cali, Colombia; c/o NEGOCIOS Y CAPITALES S.A., Pereira, Colombia; DOB 05 Dec 1968; POB Cali, Colombia; Cedula No. 16758185 (Colombia); Passport AJ149349 (Colombia) (individual) [SDNT]

BARRERA RIOS, Victoria Eugenia, c/o SERPROVIS S.A. SERVICIOS Y PROVISIONES, Cali, Colombia; c/o RIOS JIMENEZ S. EN C.S., Bogota, Colombia; c/o B R C S.A., Cali, Colombia; Transversal 18 No. 127–43 Torre 4 apto. 1201, Bogota, Colombia; c/o CECEP S.A., Cali, Colombia; c/o ALFONSO BARRERA RIOS Y CIA. S. EN C.S., Cali, Colombia; c/o CECEP EDITORES S.A., Cali, Colombia; c/o ENSAMBLADORA COLOMBIANA AUTOMOTRIZ S.A., Barranquilla, Colombia; c/o A K EDUCAL S.A. EDUCACION CON CALIDAD, Cali, Colombia; c/o APVA S.A., Cali, Colombia; c/o A K DIFUSION S.A. PUBLICIDAD Y MERCADEO, Cali, Colombia; c/o NEGOCIOS Y CAPITALES S.A., Pereira, Colombia; c/o WORLD LINE SYSTEM S.A., Palmira, Valle, Colombia; DOB 11 Dec 1970; POB Cali, Colombia; Cedula No. 66818996 (Colombia); Passport AI939751 (Colombia) (individual) [SDNT]

BARRIOS SENIOR, Jario Ascanio, c/o PENTACOOP LTDA., Bogota, Colombia; DOB 18 Jun 1962; Cedula No. 8723099 (Colombia) (individual) [SDNT]

BARRIOS, Alba Lucia, c/o SONAR F.M. S.A., Cali, Colombia; Los Alcazares Bloq. 93 Ap. 402, Cali, Colombia; c/o CREDIREBAJA S.A., Cali, Colombia; c/o SONAR F.M. E.U. DIETER MURRLE, Cali, Colombia; c/o POLIEMPAQUES S.A., Cali, Colombia; Cedula No. 38853130 (Colombia) (individual) [SDNT]

BARTH, Frederik Heinz, Kientzheimer Strasse 1, Schwendi 88477, Germany; DOB 30 Aug 1965; POB Laupheim, Germany; citizen Germany; Occupation: Chemist (individual) [SDNTK]

BASAYEV, Shamil Salmanovich; DOB 14 Jan 1965; POB Dyshni-Vedeno, Chechnya; Passport 623334 (Russia) (individual) [SDGT]

BASEVIC, Dragan; DOB 2 Mar 1976; POB Belgrade, Serbia (individual) [BALKANS]

BASHAIER, Khartoum, Sudan [SUDAN]

BATARJEE, Adel Abdul Jalil Ibrahim (a.k.a. AL-BATTARJEE, 'Adil; a.k.a. BATARJI, 'Adil 'Abd al Jalil; a.k.a. BATTERJEE, Adel; a.k.a. BATTERJEE, Adel Abdul Jaleel I.), 2 Helmi Kutbi Street, Jeddah, Saudi Arabia; DOB 1 Jul 1946; alt. DOB 1 Jun 1946; POB Jeddah, Saudi Arabia; citizen Saudi Arabia; Passport F 572010 issued 22 Dec 2004 expires 28 Oct 2009; E-mail:adelb@shabakah.net.sa (individual) [SDGT]

BATISTA, Miguel, Panama (individual) [CUBA]

BAY INDUSTRIES, INC., 10100 Santa Monica Boulevard, Santa Monica, CA [IRAQ2]

BAYT AL-MAL (a.k.a. BAYT AL-MAL LIL MUSLIMEEN), Al-Nabatiyah, Lebanon; Sidon, Lebanon; Harat Hurayk, Beirut, Lebanon; Burj al-Barajinah, Lebanon; Tyre, Lebanon; Ba'albak, Lebanon; Hirmil, Lebanon [SDGT]

BEARA, Ljubisa; DOB 14 Jul 1939; POB Sarajevo, Bosnia and Herzegovina (individual) [BALKANS]

BECERRA BECERRA, Alvaro, c/o AGROPECUARIA LA ROBLEDA S.A., Cali, Colombia; Cedula No. 2730788 (Colombia) (individual) [SDNT]

BECERRA RODRIGUEZ, Mario Alberto, c/o MULTISERVICIOS DEL NOROESTE DE MEXICO, S.A. DE C.V., Tijuana, Baja California, Mexico; c/o CASA DE EMPENO RIO TIJUANA, S.A. DE C.V., Tijuana, Baja California, Mexico; Calle del Creston 334, Colonia Playas de Tijuana, Tijuana, Baja California CP 22300, Mexico; DOB 17 Sep 1954; POB Tijuana, Baja California, Mexico; R.F.C. BERM–540917–181 (Mexico) (individual) [SDNTK]

BECERRA ZEPEDA, Gabriel, c/o OPERADORA DE CAJA Y SERVICIOS, S.A. DE C.V., Tijuana, Baja California, Mexico; Benito Juarez, Calle 8290, Zona Central, Tijuana, Baja California 22000, Mexico; DOB 16 Oct 1959; POB Michoacan, Mexico; citizen Mexico; nationality Mexico; C.U.R.P. BEZG591016HMNCPB00 (Mexico); R.F.C. BEZG–591016-FL4 (Mexico) (individual) [SDNTK]

BECHARA SIMANCA, Salim, c/o SOCOVALLE, Cali, Colombia; DOB 26 Jul 1950; alt. DOB 28 Jul 1950; Cedula No. 19163957 (Colombia) (individual) [SDNT]

BEDOYA DE SANCLEMENTE, Maria Ninive, c/o DISTRIBUCIONES GLOMIL LTDA., Cali, Colombia; DOB 13 Jul 1938; Cedula No. 29645304 (Colombia); NIT # 29645304–8 (Colombia); Passport 29645304 (Colombia) (individual) [SDNT]

BEDOYA VELEZ, Jose Ignacio (a.k.a. ''NACHO BEDOYA''), Calle 16 No. 71A-07/09, Cali, Colombia; Carrera 1G No. 71–07, Cali, Colombia; DOB 06 Jan 1959; POB Tulua, Valle, Colombia; alt. POB Armenia, Quindio, Colombia; citizen Colombia; Cedula No. 16351225 (Colombia) issued 20 Jun 1977; Passport 16351225 (Colombia) issued 26 Mar 2004 expires 26 Mar 2014; alt. Passport AJ126708 (Colombia) issued 26 Mar 2004 (individual) [SDNT]

BEHZAD, Ahmad Abdulla Mohammad Abdulla (a.k.a. BAHZAD, Ahmad Abdullah Mohamed Abdullah; a.k.a. BEHZAD BSTAKI, Ahmad Abdullah Mohammed Abdullah; a.k.a. BEHZAD, Abdulla Mohd Abdulla; a.k.a. BEHZAD, Ahmad Abdulla Mohammad A; a.k.a. BEHZAD, Ahmad Abdulla Mohammad Abdulla; a.k.a. BEHZAD, Ahmad Abdulla Mohd Abdulla; a.k.a. BEHZAD, Ahmed Abdullah; a.k.a. ''ABDULLA MOHAMAD ABDULLA MOHAMAD BEHZAD''; a.k.a. ''ABDULLAH AHMAD ABDULLAH MOHAMAD BAHZAD''; a.k.a. ''ABDULLAH MOHAMMED ABDULLAH BAHZAD''; a.k.a. ''AHMED BEHZA''; a.k.a. ''AHMED MOHAMMED ABDULLAH''; a.k.a. ''MOHAMMED ABDULLAH

MOHAMMED BAHZAD''), Dubai, United Arab Emirates; c/o FMF GENERAL TRADING LLC, Dubai, United Arab Emirates; c/o SHAHBAZ KHAN GENERAL TRADING LLC, Dubai, United Arab Emirates; Sharjah, United Arab Emirates; DOB 02 Nov 1971; POB Dubai, United Arab Emirates; citizen United Arab Emirates; Passport A1042768 (United Arab Emirates); alt. Passport A0269124 (United Arab Emirates) (individual) [SDNTK]

BEIJING ALITE TECHNOLOGIES CO., LTD. (a.k.a. ALCO; a.k.a. BEIJING HAILI LIANHE KEJI YOUXIAN GONGSI), 12A Beisanhuan Zhong Road, P.O. Box 3042, Beijing, China; and all other locations worldwide [NPWMD]

BEIT EL-MAL HOLDINGS (a.k.a. ARAB PALESTINIAN BEIT EL-MAL COMPANY; a.k.a. BEIT AL MAL HOLDINGS; a.k.a. BEIT EL MAL AL-PHALASTINI AL-ARABI AL-MUSHIMA AL-AAMA AL-MAHADUDA LTD.; a.k.a. PALESTINIAN ARAB BEIT EL MAL CORPORATION, LTD.), P.O. Box 662, Ramallah, West Bank [SDT] [SDGT]

BELARUSIAN OIL TRADE HOUSE (a.k.a. B.O.T.H.; a.k.a. BELARUSIAN OIL TRADING HOUSE; a.k.a. BELARUSIAN OIL TRADING HOUSE REPUBLICAN SUBSIDIARY UNITARY ENTERPRISE; a.k.a. BELARUSIAN OIL TRADING HOUSE REPUBLICAN UNITARY SUBSIDIARY; a.k.a. UE BELARUSIAN OIL TRADE HOUSE; a.k.a. UNITED TRADING SITE; a.k.a. WWW.BNTD.BY; a.k.a. WWW.BNTDTORG.BY), Dzerzhinsky Avenue, 73, Minsk 220116, Belarus; 73 Derzhinskiy Ave., Minsk 220116, Belarus; Prospect Dzerzhinskogo, 73, Minsk 220116, Belarus; Business Registration Document # UNP 101119568 (Belarus) [BELARUS]

BELLOSOM ENTERPRISE, INC., Avenida Central y Calle 4ta, Edificio Plaza Central, Oficina 32, Panama City, Panama; RUC # 2991141409851 (Panama) [SDNTK]

BELMEX IMPORT EXPORT CO., LTD., 24 Corner Regent and Kings Streets, Belize City, Belize [CUBA]

BELMOKHTAR, Mokhtar; DOB 1 Jun 1972; POB Ghardaia, Algeria (individual) [SDGT]

BELNEFTEKHIM (a.k.a. BELARUSIAN STATE CONCERN FOR OIL AND CHEMISTRY; a.k.a. BELARUSIAN STATE PETROLEUM AND CHEMICALS CONCERN; a.k.a. BELNEFTEKHIM CONCERN; a.k.a. CONCERN BELNEFTEKHIM), GP 1 Apes Street, Riga LV–1039, Latvia; Oederweg 43, Frankfurt-am-Main D–60318, Germany; Tower B 19-B Oriental Kenzo, 48 Dongzhimenwai Street, Dongcheng District, Beijing 100027, China; ul Trevskaya, 20/1, Room 536, Moscow 103789, Russia; ul Pavlovskaya, 29, Kiev 01135, Ukraine; 73 Dzerzhinskogo Avenue, Minsk 220116, Belarus [BELARUS]

BELNEFTEKHIM USA, INC., 13 Branch St., # 213, Methuen, MA 01844; US FEIN 000920912 (United States) [BELARUS]

BELS FLOWERS IMPORT EXPORT BVBA, Lange Lobroekstraat 8, Antwerpen 2060, Belgium; C.R. No. 478351540 (Belgium) [SDNTK]

BELTRAN LEYVA ORGANIZATION, Mexico [SDNTK]

BELTRAN LEYVA, Marcos Arturo (a.k.a. BELTRAN LEYVA, Arturo; a.k.a. BELTRAN LEYVA, Arturo Guzman; a.k.a. ''EL BARBAS''; a.k.a. ''EL FANTASMA''), Monterrey, Nuevo Leon, Mexico; Nuevo Leon, Nuevo Leon, Mexico; Nogales, Sonora, Mexico; Calle Cerro, Colinas de San Miguel, Culiacan, Sinaloa, Mexico; Avenida Juan de la Barrera No. 1970, Colonia Burocrata, Culiacan, Sinaloa, Mexico; Calle Francisco Marquez, Colonia Chapultepec, Culiacan, Sinaloa, Mexico; Acapulco, Guerrero, Mexico; Tijuana, Baja California, Mexico; Guamuchil, Sinaloa, Mexico; DOB 27 Sep 1961; alt. DOB 05 Feb 1958; alt. DOB 05 Jun 1962; alt. DOB 21 Sep 1961; POB Culiacan, Sinaloa, Mexico; alt. POB Badiraguato, Sinaloa, Mexico; citizen Mexico; nationality Mexico (individual) [SDNTK]

BELTRAN ROMERO, Mireya Denisse, c/o OPERADORA INTEGRAL DE COMERCIO, S.A. DE C.V., Tijuana, Baja California, Mexico; c/o TECNOLOGIA DIGITAL Y SERVICIOS, S.A. DE C.V., Tijuana, Baja California, Mexico; Paseo Estrella de Mar No. 1210, Seccion Coronado, Colonia Playas, Tijuana, Baja California, Mexico; DOB 11 Mar 1981; POB Tijuana, Baja California, Mexico; citizen Mexico; nationality Mexico; Passport 03900215458 (Mexico); R.F.C. BERM810311CF0 (Mexico) (individual) [SDNTK]

BELTRAN SANCHEZ, Hector Manuel, Manuel M. Flores 20 Montebello, Tijuana, Baja California, Mexico; c/o TECNOLOGIA DIGITAL Y SERVICIOS, S.A. DE C.V., Tijuana, Baja California, Mexico; c/o OPERADORA INTEGRAL DE COMERCIO, S.A. DE C.V., Tijuana, Baja California, Mexico; Paseo Estrella Del Mar No. 1210, Playas de Tijuana, Tijuana, Baja California, Mexico; DOB 2 Mar 1952; POB Culiacan, Sinaloa, Mexico; citizen Mexico; nationality Mexico; R.F.C. BESH520302AS4 (Mexico) (individual) [SDNTK]

BEN ABDELHAKIM, Cherif Said (a.k.a. ABOU SALMAN; a.k.a. AL-CHERIF, Said Ben Abdelhakim Ben Omar; a.k.a. ''DJALLAL''; a.k.a. ''YOUCEF''), Corso Lodi 59, Milan, Italy; DOB 25 Jan 1970; POB Menzel Temine, Tunisia; nationality Tunisia; Passport M307968 issued 8 Sep 2001 expires 7 Sep 2006; arrested 30 Sep 2002 (individual) [SDGT]

BEN ATTIA, Nabil Ben Mohamed Ben Ali, Tunis, Tunisia; DOB 11 May 1966; POB Tunis, Tunisia; nationality Tunisia; Passport L289032 issued 22 Aug 2001 expires 21 Aug 2006 (individual) [SDGT]

BEN HENI, Lased (a.k.a. BEN HANI, Al As'ad); DOB 5 Feb 1969; POB Libya; alt. POB Tripoli (individual) [SDGT]

BEN SOLTANE, Adel (a.k.a. BEN SOLTANE, Adel Ben Al-Azhar Ben Youssef), Via Latisana n. 6, Milan, Italy; DOB 14 Jul 1970; POB Tunis, Tunisia; nationality Tunisia; Italian Fiscal Code BNSDLA70L14Z352B; Passport M408665 issued 4 Oct 2000 expires 3 Oct 2005 (individual) [SDGT]

BENAVIDES MONTENEGRO, Sandra Patricia, c/o ESPIBENA S.A., Quito, Ecuador; RUC # 0400778890 (Ecuador) (individual) [SDNT]

BENAVIDES VASQUEZ, Jorge, c/o CAJA SOLIDARIA, Bogota, Colombia; c/o FARMAVISION LTDA., Bogota, Colombia; c/o COPSERVIR LTDA., Bogota, Colombia; Cedula No. 9397198 (Colombia) (individual) [SDNT]

BENAVIDEZ CHAVEZ, Alvaro Higinio, c/o AGROPECUARIA MIRALINDO S.A., Cartago, Colombia; c/o ARIZONA S.A., Cartago, Colombia; Carrera 8N No. 17A–12, Cartago, Colombia; DOB 1 Feb 1971; Cedula No. 94295393 (Colombia); Passport 94295393 (Colombia) (individual) [SDNT]

BENDEBKA, L'Hadi (a.k.a. ABD AL HADI; a.k.a. HADI), Via Manzoni, 33, Cinisello Balsamo, Milan, Italy; Via Garibaldi, 70, San Zenone al Po, Pavia, Italy; DOB 17 Nov 1963; POB Algiers Algeria (individual) [SDGT]

BENEVOLENCE INTERNATIONAL FOUNDATION (a.k.a. AL BIR AL DAWALIA; a.k.a. BIF; a.k.a. BIF-USA; a.k.a. MEZHDUNARODNYJ BLAGOTVORITEL'NYJ FOND), 69 Boshir Safaroglu St., Baku, Azerbaijan; 2465 Cawthra Rd., #203, Mississauga, Ontario, L5A 3P2, Canada; P.O. Box 10845, Riyadh 11442, Saudi Arabia; Bangladesh; Bosnia and Herzegovina; Bashir Safar Ugli 69, Baku, Azerbaijan; Grozny, Chechnya, Russia; 8820 Mobile Avenue, 1A, Oak Lawn, IL 60453; (Formerly located at) 20–24 Branford Place, Suite 705, Newark, NJ 07102; Zenica, Bosnia and Herzegovina; Duisi, Georgia; Burgemeester Kessensingel 40, Maastricht, Netherlands; Ulitsa Oktyabr'skaya, dom. 89, Moscow, Russia; Dushanbe, Tajikistan; P.O. Box 1508 Station B, Mississauga, Ontario, L4Y 4G2, Canada; 91 Paihonggou, Lanzhou, Gansu, China; Makhachkala, Daghestan, Russia; P.O. Box 548, Worth, IL 60482; Hrvatov 30, 41000, Zagreb, Croatia; (Formerly located at) 9838 S. Roberts Road, Suite 1–W, Palos Hills, IL 60465; Nazran, Ingushetia, Russia; P.O. Box 1937, Khartoum, Sudan; House 111, First Floor, Street 64, F–10/3, Islamabad, Pakistan; P.O. Box 1055, Peshawar, Pakistan; Azovskaya 6, km. 3, off. 401, Moscow, Russia; P.O. Box 7600, Jeddah 21472, Saudi Arabia; United Kingdom; Sarajevo, Bosnia and Herzegovina; 3 King Street, South Waterloo, Ontario, N2J 3Z6, Canada; Ottawa, Canada; Tbilisi, Georgia; Afghanistan; Gaza Strip, undetermined; Yemen; US FEIN 36–3823186 [SDGT]

BENEVOLENCE INTERNATIONAL FUND (a.k.a. BENEVOLENT INTERNATIONAL FUND; a.k.a. BIF-CANADA), P.O. Box 1508, Station B, Mississauga, Ontario, L4Y 4G2, Canada; P.O. Box 40015, 75 King Street South, Waterloo, Ontario, N2J 4V1, Canada; 92 King Street, 201, Waterloo, Ontario, N2J 1P5, Canada; 2465 Cawthra Rd., Unit 203, Mississauga, Ontario, L5A 3P2, Canada [SDGT]

BENHAMMEDI, Mohammed (a.k.a. BEN HAMMEDI, Mohammed; a.k.a. BIN HAMMIDI, Muhammad Muhammad; a.k.a. HANNADI, Mohamed; a.k.a. ''ABU AL QASSAM''; a.k.a. ''ABU HAJIR''; a.k.a. ''ABU HAJIR AL LIBI''; a.k.a. ''HAMMEDI, Ben''; a.k.a. ''PANHAMMEDI''), Midlands, United Kingdom; DOB 22 Sep 1966; POB Libya; citizen Libya (individual) [SDGT]

BENITEZ SANCHEZ, Jose Arturo, c/o MAPRI DE COLOMBIA LTDA., Bogota, Colombia; c/o COSMEPOP, Bogota, Colombia; c/o AMERICANA DE COSMETICOS S.A., Bogota, Colombia; c/o DISTRIEXPORT S.A., Bogota, Colombia; Cedula No. 10276819 (Colombia); Passport 10276819 (Colombia) (individual) [SDNT]

BENOIT SANTAMARIA, Alvaro Jose, c/o BENOIT VELEZ AGROPECUARIA LA VEREDA Y CIA. S.C.S., Pereira, Colombia; Calle 24 No. 7–29 apto. 413, Pereira, Colombia; DOB 23 Oct 1964; POB Cali, Colombia; Cedula No. 16704710 (Colombia); Passport AH283771 (Colombia) (individual) [SDNT]

BENOIT VELEZ AGROPECUARIA LA VEREDA Y CIA. S.C.S., Carrera 4 No. 26–14, Pereira, Colombia; NIT # 816005088–0 (Colombia) [SDNT]

BEQIRI, Idajet (a.k.a. BEQIRI, Hidajet); DOB 20 Feb 1951; POB Mallakaster Fier, Albania (individual) [BALKANS]

BERASATEGUI ESCUDERO, Ismael; DOB 15 Mar 1963; POB Eibar Guipuzcoa Province, Spain; D.N.I. 15.379.555; Member ETA (individual) [SDGT]

BERNAL, Beatriz, c/o VILLARO LTDA., Bogota, Colombia; Cedula No. 65497873 (Colombia) (individual) [SDNT]

BETTINA SHIPPING CO. LTD., c/o EMPRESA DE NAVEGACION MAMBISA, Apartado 543, San Ignacio 104, Havana, Cuba [CUBA]

BEWELL CORPORATION, INC., Panama [CUBA]

BEXHETI, Nuri; DOB 1962; POB Tetovo, Macedonia (individual) [BALKANS]

BIBLOS TRAVEL AGENCY (a.k.a. BIBLIOS TRAVEL; a.k.a. BIBLOS TRAVEL CA; a.k.a. BIBLOS TRAVEL, C.A.), Avenida Baralt, Esquina Maderero, Edificio Santa Isabel II, PB, Loc. 1, Caracas, Venezuela [SDGT]

BIN HUSIN, Azahari (a.k.a. BIN HUSAN, Azahari; a.k.a. HUSIN, Azahari); DOB 14 Sep 1957; POB Malaysia; nationality Malaysia (individual) [SDGT]

BIN LADEN, Sa'ad (a.k.a. ABBUD, Bin Muhammad Awad; a.k.a. ABUD, Sa'ad Muhammad Awad; a.k.a. ADBUD, Muhammad 'Awad; a.k.a. AWAD, Muhammad; a.k.a. BAABOOD, Sa'ad Muhammad; a.k.a. BIN LADEN, Sad; a.k.a. ''AL-KAHTANE, Abdul Rahman''); DOB 1982; POB Saudi Arabia; nationality Saudi Arabia; Passport 520951 (Sudan); alt. Passport 530951 (Sudan) (individual) [SDGT]

BIN LADIN, Usama bin Muhammad bin Awad (a.k.a. BIN LADEN, Osama; a.k.a. BIN LADEN, Usama; a.k.a. BIN LADIN, Osama; a.k.a. BIN LADIN, Osama bin Muhammad bin Awad; a.k.a. BIN LADIN, Usama); DOB 30 Jul 1957; alt. DOB 1958; POB Jeddah, Saudi Arabia; alt. POB Yemen (individual) [SDT] [SDGT]

BIN MANSOUR, Amran (a.k.a. BIN MANSOR, Amran; a.k.a. BIN MANSOR, Henry; a.k.a. MANSOR, Amran); DOB 25 May 1965; POB Malaysia (individual) [SDGT]

BIN MARWAN, Bilal; DOB 1947 (individual) [SDGT]

BIN MUHAMMAD, Ayadi Chafiq (a.k.a. AIADI, Ben Muhammad; a.k.a. AIADY, Ben Muhammad; a.k.a. AYADI CHAFIK, Ben Muhammad; a.k.a. AYADI SHAFIQ, Ben Muhammad), Darvingasse 1/2/58–60, Vienna, Austria; 28 Chaussee de Lille, Mouscron, Belgium; Helene Meyer Ring 10–1415–80809, Munich, Germany; Tunisia; 129 Park Road, NW8, London, United Kingdom; DOB 21 Jan 1963; POB Safais (Sfax), Tunisia (individual) [SDGT]

BINALSHIBH, Ramzi Mohammed Abdullah (a.k.a. BIN AL SHIBH, Ramzi; a.k.a. BINALSHEIDAH, Ramzi Mohamed Abdullah; a.k.a. OMAR, Ramzi Mohammed Abdellah), Emil Anderson Strasse 5, Hamburg 22073, Germany; Billstedter Hauptstr Apt. 14, Hamburg 22111, Germany; Marienstr #54, Hamburg 21073, Germany; Letzte Heller #109, Hamburg University, Hamburg 22111, Germany; Schleemer Ring 2, Hamburg 22117, Germany; DOB 1 May 1972; alt. DOB 16 Sep 1973; POB Hadramawt, Yemen; alt. POB Khartoum Sudan; nationality Yemen; Passport A755350 (Saudi Arabia); alt. Passport R85243 (Yemen); alt. Passport 00085243 (Yemen) (individual) [SDGT]

BIO CORPORATION (a.k.a. BOSNIAN INVESTMENT ORGANIZATION), Sarajevo, Bosnia and Herzegovina [BALKANS]

BIOESPORT S.A. DE C.V., Avenida Ave. 13 y Morelos S/N, Colonia Bachoco, Hermosillo, Sonora 83148, Mexico; R.F.C. BIO901025VE2 (Mexico) [SDNTK]

BJELICA, Milovan 'Cicko', Starine Novaka Street BB, Sokolac, Republika Srpska, Bosnia and Herzegovina; DOB 19 Oct 1958; POB Rogatica, Bosnia-Herzegovina; National ID No. 1910958130007 (individual) [BALKANS]

BLACKMORE INVESTMENTS A.V.V., L.G. Smith Blvd. 48, Oranjestad, Aruba; P.O. Box 1060, Oranjestad, Aruba; C.R. No. 12128.0 (Aruba) [SDNT]

BLAGOJEVIC, Vidoje; DOB 22 Jun 1950; POB Bratunac, Bosnia-Herzegovina; ICTY indictee (individual) [BALKANS]

BLANCO BAHOQUE, Gabino Leon, c/o SU SERVICIO SOCIEDAD LTDA., Barranquilla, Colombia; Cedula No. 72136630 (Colombia) (individual) [SDNT]

BLANCO ORTEGA, Marylin, c/o DROGAS LA REBAJA BUCARAMANGA S.A., Bucaramanga, Colombia; c/o COOPDISAN, Bucaramanga, Colombia; c/o COMUDROGAS LTDA., Bucaramanga, Colombia; Cedula No. 63332075 (Colombia); Passport 63332075 (Colombia) (individual) [SDNT]

BLANCO PUERTA, Edgar Fernando; DOB 19 Jun 1946; POB Medellin, Antioquia, Colombia; Cedula No. 13224238 (Colombia) (individual) [SDNTK]

BLASKIC, Tihomir; DOB 2 Nov 1960; POB Brestovsko, Bosnia-Herzegovina; ICTY indictee (individual) [BALKANS]

BLE GOUDE, Charles, 23 BP 3383, Abidjan 23, Cote d Ivoire; DOB 1 Jan 1972; POB Guiberoua, Cote d'Ivoire; Passport PDAE088DH12 (Cote d Ivoire); Head of ''Young Patriots'' (Congres Panafricain des Jeunes Patriotes, COJEP) (individual) [COTED]

BLISSEY PANAMA INC., Avenida Central y Calle 4ta, Edificio Plaza Central, Oficina 32, Panama City, Panama; RUC # 2989391409828 (Panama) [SDNTK]

BLOTO INTERNATIONAL COMPANY (a.k.a. BLOTO INTERNATIONAL, LTD.; a.k.a. BLUTO INTERNATIONAL; a.k.a. PLUTO-DUBAI TRADING COMPANY, LLC), Dubai, United Arab Emirates; Iraq; 131/13 Soi 7/1 Sukhumvit Road, Wattana, Bangkok, Thailand; 131/13 Sukhumvit Road, Klongtoey Neua sub-district, Wattana District [IRAQ2]

BLUE NILE BREWERY, P.O. Box 1408, Khartoum, Sudan [SUDAN]

BLUE NILE PACKING CORPORATION, P.O. Box 385, Khartoum, Sudan [SUDAN]

BMIIC INTERNATIONAL GENERAL TRADING LTD (a.k.a. BMIIC TRADING UAE; a.k.a. BMIIGT; a.k.a. ''BMIICGT''), Deira, P.O. Box 181878, Dubai, United Arab Emirates; P.O. Box 11567, Dubai, United Arab Emirates [NPWMD]

BO, Maung; DOB 16 Feb 1945; citizen Burma; nationality Burma; Lieutenant-General; Chief of Bureau of Special Operation 4; Member, State Peace and Development Council (individual) [BURMA]

BOCOTA AGUABLANCA, Gustavo (a.k.a. BOGOTA, Gustavo; a.k.a. ''ESTEVAN''; a.k.a. ''TRIBISU''); DOB 28 Aug 1966; Cedula No. 9466199 (Colombia); alt. Cedula No. 9466833 (Colombia) (individual) [SDNTK]

BODDEN GALE, Elvert Dowie (a.k.a. ''TIO BODDEN''), Roatan, Honduras; DOB 24 Apr 1956; POB Honduras; Passport A046090 (Honduras) (individual) [SDNT]

BOHADA AVILA, Lubin, c/o ASESORES CONSULTORES ASOCIADOS LTDA., Cali, Colombia; c/o GAD S.A., La Union, Valle, Colombia; Carrera 100 No. 11–90 of. 403, Cali, Colombia; c/o INDUSTRIAS DEL ESPIRITU SANTO S.A., Malambo, Atlantico, Colombia; c/o CONSTRUCCIONES E INVERSIONES LTDA., La Union, Valle, Colombia; c/o TARRITOS S.A., Cali, Colombia; Calle 142A No. 106A–21 apt. 302, Bogota, Colombia; c/o AGRONILO S.A., Toro, Valle, Colombia; c/o ARMAGEDON S.A., La Union, Valle, Colombia; c/o FRUTAS DE LA COSTA S.A., Malambo, Atlantico, Colombia; c/o WORLD WORKING COMERCIALIZADORA INTERNACIONAL S.A., Cali, Colombia; c/o FUNDACION CENTRO FRUTICOLA ANDINO, La Union, Valle, Colombia; Cedula No. 19093178 (Colombia) (individual) [SDNT]

BOILEAU, Pierre, 1078 Rue Champigny, Duvernay, Quebec, Canada (individual) [CUBA]

BOLSAK E.U. (a.k.a. BOLSAK S.A.), Calle 15 No. 25–400 Urbanizacion Industrial Acopi, Yumbo, Colombia; NIT # Provisional (Colombia) [SDNT]

BONOMERCAD S.A. (f.k.a. DECACOOP S.A.), Transversal 29 No. 39–92, Bogota, Colombia; NIT # 830018919–3 (Colombia) [SDNT]

BONYONGWE, Happyton Mabhuya; DOB 6 Nov 1960; POB Chikomba District, Zimbabwe; nationality Zimbabwe; Director General, Central Intelligence Organization (individual) [ZIMBABWE]

BOONCHUA, Chanchira (a.k.a. BOONCHUA, Chanjira; a.k.a. CHANCHIRA, Boochuea; a.k.a. LIANG, Ching-fang; a.k.a. ''CHE FONG''; a.k.a. ''CHEFONG''; a.k.a. ''JEH FONG''), 261, Wichayanon Road, Tambon

Chang Moi, Amphur Muang, Chiang Mai, Thailand; c/o SANGSIRI KANKASET COMPANY LIMITED, Chiang Mai, Thailand; c/o KHUM THAW COMPANY LIMITED, Chiang Mai, Thailand; DOB 15 May 1951; National Foreign ID Number 350991386390 (Thailand) issued 28 Oct 1952 expires 14 May 2009 (individual) [SDNTK]

BORAVCANIN, Ljubomir; DOB 27 Feb 1960; POB Han Pijesak, Bosnia-Herzegovina; ICTY indictee (individual) [BALKANS]

BORBOA ZAZUETA, Zynthia (a.k.a. BORBOA DE ZAMBADA, Zynthya; a.k.a. BORBOA ZAZUETA, Cinthia), Calle Miguel Hidalgo PTE 348, Centro Culiacan, Sinaloa, Mexico; Lago Maracaibo 3121, Lago Azul y Ave Lago Azul, Lomas de Boulevard, Culiacan, Sinaloa, Mexico; Manuel Bonilla 1166, Guadalupe, Culiacan, Sinaloa, Mexico; c/o MULTISERVICIOS JEVIZ S.A. DE C.V., Culiacan, Sinaloa, Mexico; DOB 30 Jan 1975; POB Sinaloa, Mexico; citizen Mexico; nationality Mexico; C.U.R.P. BOZC750130MSLRZN09 (Mexico); Passport 04040046465 (Mexico); R.F.C. BOZZ–750130-LK4 (Mexico) (individual) [SDNTK]

BOROVCANIN, Veljko; DOB 25 Sep 1957; POB Sarajevo, Bosnia-Herzegovina (individual) [BALKANS]

BOROVNICA, Goran; DOB 15 Aug 1965; ICTY indictee at large (individual) [BALKANS]

BORRERO QUINTERO, Hector Fabio, c/o INVERSIONES SANTA LTDA., Cali, Colombia; c/o SOCIEDAD CONSTRUCTORA LA CASCADA S.A., Cali, Colombia; Carrera 21 No. 9E–48, Cali, Colombia; c/o INMOBILIARIA SAMARIA LTDA., Cali, Colombia; DOB 10 Feb 1948; Cedula No. 14945412 (Colombia) (individual) [SDNT]

BOSANSKA IDEALNA FUTURA (a.k.a. BECF CHARITABLE EDUCATIONAL CENTER; a.k.a. BENEVOLENCE EDUCATIONAL CENTER; a.k.a. BIF-BOSNIA; a.k.a. BOSNIAN IDEAL FUTURE), Hadzije, Mazica Put 16F, 72000 Zenica, Bosnia and Herzegovina; Sehidska, Street, Breza, Bosnia and Herzegovina; Hamze, Celenke 35, Ilidza, Sarajevo, Bosnia and Herzegovina; Kanal, 1, 72000 Zenica, Bosnia and Herzegovina; Salke Lagumdzije 12, 71000 Sarajevo, Bosnia and Herzegovina [SDGT]

BOSKOVSKI, Ljube; DOB 24 Oct 1960 (individual) [BALKANS]

BOUCHOUCHA, Mokhtar (a.k.a. BOUCHOUCHA, Al-Mokhtar Ben Mohamed Ben Al-Mokhtar; a.k.a. BUSHUSHA, Mokhtar), Via Milano n.38, Spinadesco (CR), Italy; DOB 13 Oct 1969; POB Tunisia; nationality Tunisia; Italian Fiscal Code BCHMHT69R13Z352T; Passport K754050 issued 26 May 1999 expires 25 May 2004 (individual) [SDGT]

BOUGHANEMI, Faycal (a.k.a. BOUGHANMI, Faical), viale Cambonino, 5/B, Cremona, Italy; DOB 28 Oct 1966; POB Tunis, Tunisia; nationality Tunisia; Italian Fiscal Code BGHFCL66R28Z352G (individual) [SDGT]

BOURNE FARM, Chegutu, Zimbabwe [ZIMBABWE]

BOUT, Sergei Anatolyievich (a.k.a. NIKOLAYEVICH BUT, Sergey; a.k.a. ''BUT''; a.k.a. ''BUTT''; a.k.a. ''SERGEY''; a.k.a. ''SERGI''; a.k.a. ''SERGO''; a.k.a. ''SERGUEI''), c/o AIR ZORY, 54 G. M. Dimitrov Blvd, Sofia BG-1125, Bulgaria; Moscow, Russia; c/o AIR CESS, Islamabad, Pakistan; c/o AIR CESS, P.O. Box 7837, Sharjah, United Arab Emirates; DOB 27 Aug 1961; POB Tajikistan; citizen Russia; alt. citizen Ukraine; National ID No. CB039314 (Ukraine); alt. National ID No. 76704 (Russia) (individual) [LIBERIA]

BOUT, Viktor Anatolijevitch (a.k.a. BONT; a.k.a. BOUTOV; a.k.a. BUTT; a.k.a. BUTTE; a.k.a. SERGITOV, Vitali); DOB 13 Jan 1967; alt. DOB 13 Jan 1970; POB Dushanbe, Tajikistan; Dealer and transporter of weapons and minerals; Owner, Great Lakes Business Company, Compagnie Aerienne des Grands Lacs, Bukavu Aviation Transport, and Business Air Services (individual) [DRCONGO] [LIBERIA]

BOUTIQUE LA MAISON, 42 Via Brasil, Panama City, Panama [CUBA]

BOUYAHIA, Hamadi Ben Abdul Aziz Ben Ali (a.k.a. GAMEL MOHAMED), Corso XXII Marzo 39, Milan, Italy; DOB 22 May 1966; alt. DOB 29 May 1966; POB Tunisia; nationality Tunisia; Passport L723315 issued 5 May 1998 expires 4 May 2003; arrested 30 Sep 2002 (individual) [SDGT]

BRADFIELD MARITIME CORPORATION INC., c/o EMPRESA DE NAVEGACION MAMBISA, Apartado 543, San Ignacio 104, Havana, Cuba [CUBA]

BRALO, Miroslav (a.k.a. CICKO); DOB 13 Oct 1967; POB Kratine, Vitez (individual) [BALKANS]

BRDJANIN, Radoslav; DOB 9 Feb 1948; POB Popovac, Bosnia-Herzegovina; ICTY indictee (individual) [BALKANS]

BRECO (ASIA PACIFIC) LTD, First Floor, Falcon Cliff, Palace Road, Douglas IM2 4LB, Man, Isle of; Business Registration Document # M78647 (United Kingdom) [ZIMBABWE]

BRECO (EASTERN EUROPE) LTD (a.k.a. BRECO (EASTERN EUROPE) LIMITED), Falcon Cliff, Palace Road, Douglas IM99 1ZW, Man, Isle of; Hurst Grove, Standord Lane, Hurst, Reading, Berkshire RG10 0SQ, United Kingdom; Business Registration Document # FC0021189 (United Kingdom) [ZIMBABWE]

BRECO (SOUTH AFRICA) LTD, 9 Columbus Centre, Pelican Drive, Road Town, Tortola, Virgin Islands, British; Cumbrae House, Market Street, Douglas IM1 2PQ, Man, Isle of; Business Registration Document # Q1962 (United Kingdom) [ZIMBABWE]

BRECO (U.K.) LTD (a.k.a. BRECO (U.K.) LIMITED), New Boundary House, London Road, Sunningdale, Ascot, Berkshire SL5 0DJ, United Kingdom; Business Registration Document # 2969104 (United Kingdom) [ZIMBABWE]

BRECO GROUP, Middleton House, Titlarks Hill Road, Sunningdale, Ascot, Berkshire SL5 0JB, United Kingdom; Thetford Farm, P.O. Box HP86, Mount Pleasant, Harare, Zimbabwe; Mapstone House, Mapstone Hill, Lustleigh, Newton Abbot, Devon TQ13 9SE, United Kingdom; New Boundary House, London road, Sunningdale, Ascot, Berkshire SL5 0DJ, United Kingdom; 10 Montpelier Square, London SW7 1JU, United Kingdom; Hurst Grove, Sandford Lane, Hurst, Reading, Berkshire RG10 0SQ, United Kingdom; Dennerlei 30, Schoten, Belgium [ZIMBABWE]

BRECO INTERNATIONAL, 25 Broad Street, St. Helier JE2 3RR, Jersey [ZIMBABWE]

BRECO NOMINEES LTD, New Boudary House, London Road, Sunningdale, Ascot, Berkshire SL5 0DJ, United Kingdom; Business Registration Document # 2799499 (United Kingdom) [ZIMBABWE]

BRECO SERVICES LTD (a.k.a. BRECO SERVICES LIMITED), New Boundary House, London Road, Sunningdale, Ascot, Berkshire SL5 0DJ, United Kingdom; Business Registration Document # 2824946 (United Kingdom) [ZIMBABWE]

BREDENKAMP, John (a.k.a. BREDENKAMP, John A.; a.k.a. BREDENKAMP, John Arnold), Thetford Farm, P.O. Box HP86, Mount Pleasant, Harare, Zimbabwe; New Boundary House, London Road, Sunningdale, Ascot, Berkshire SL5 0DJ, United Kingdom; 62 Chester Square, London, United Kingdom; 10 Montpelier Square, London SW7 1JU, United Kingdom; Dennerlei 30, Schoten, Belgium; Hurst Grove, Sanford Lane, Hurst, Reading, Berkshire RG10 0SQ, United Kingdom; Middleton House, Titlarks Hill Road, Sunningdale, Ascot, Berkshire SL5 0JB, United Kingdom; Mapstone House, Mapstone Hill, Lustleigh, Newton Abbot, Devon TQ13 9SE, United Kingdom; DOB 11 Aug 1940; citizen Netherlands; alt. citizen Suriname; alt. citizen Zimbabwe; Passport Z153612 (Netherlands); alt. Passport ND1285143 (Netherlands); alt. Passport 367537C (Suriname); alt. Passport Z01024064 (Netherlands) (individual) [ZIMBABWE]

BRELYAN; Vessel Registration Identification IMO 9138056 (vessel) [NPWMD]

BRICENO SUAREZ, German (a.k.a. SUAREZ ROJAS, Noe; a.k.a. ''GRANOBLES''); DOB 15 Dec 1953; Cedula No. 347943 (Colombia) (individual) [SDNTK]

BRICENO SUAREZ, Jorge (a.k.a. BRICENO SUAREZ, Jorge Enrique; a.k.a. MONO JOJOY; a.k.a. OSCAR RIANO; a.k.a. SUAREZ ROJAS, Victor Julio; a.k.a. SUAREZ, Luis); DOB Jan 1953; alt. DOB 2 Jan 1951; alt. DOB 5 Feb 1953; alt. DOB 1 Feb 1949; POB Santa Marta, Magdalena, Colombia; alt. POB Cabrera, Cundinamarca, Colombia; Cedula No. 19208210 (Colombia); alt. Cedula No. 70753211 (Colombia); alt. Cedula No. 12536519 (Colombia); alt. Cedula No. 17708695 (Colombia) (individual) [SDNTK]

BRIGHT, Charles R.; DOB 29 Aug 1948; Former Minister of Finance of Liberia (individual) [LIBERIA]

BRIGHTNESS (a.k.a. IRAN BRIGHTNESS); Vessel Registration Identification IMO 9051648 (vessel) [NPWMD]

BRILLIANCE (a.k.a. IRAN BRILLIANCE); Vessel Registration Identification IMO 9051636 (vessel) [NPWMD]

BRISENO MAR, Gloria Elisa (a.k.a. BRISENO, Lizzy; a.k.a. OCHOA, Gloria Elisa), c/o LIZZY MUNDO INTERIOR, Guadalajara, Jalisco, Mexico; c/o MC OVERSEAS TRADING COMPANY S.A. DE C.V.,

Guadalajara, Jalisco, Mexico; c/o INVERSIONES Y REPRESENTACIONES S.A., Medellin, Colombia; DOB 16 Aug 1965; POB Durango, Mexico; C.U.R.P. BIMG650816MDGRRL05 (Mexico); Passport 99140015920 (Mexico) (individual) [SDNT]

BROTHERS (f.k.a. TULIP ISLANDS) (vessel) [CUBA]

BRUNELLO LTD., Nine Island Avenue, Unit 1411, Miami Beach, FL; Grand Cayman, Cayman Islands; C.R. No. 68557 (Cayman Islands) [SDNT]

BUENDIA CUELLAR, Luis Alfonso, c/o GALAPAGOS S.A., Cali, Colombia; Cedula No. 6044411 (Colombia) (individual) [SDNT]

BUENO GARCIA, Santos, c/o NUEVA INDUSTRIA DE GANADEROS DE CULIACAN S.A. DE C.V., Culiacan, Sinaloa, Mexico; Calle Granate 816, Culiacan, Sinaloa 80015, Mexico; Calle Rio Fuerte 581, Culiacan, Sinaloa 80220, Mexico; c/o ESTABLO PUERTO RICO S.A. DE C.V., Culiacan, Sinaloa, Mexico; DOB 27 Mar 1964; POB Sinaloa, Mexico; citizen Mexico; nationality Mexico; C.U.R.P. BUGS640327MSLNRN01 (Mexico); Passport 040035868 (Mexico) (individual) [SDNTK]

BUENO GUERRERO, Alfonso, c/o CLINICA SAN FRANCISCO S.A., Tulua, Valle, Colombia; Carrera 45 No. 4A–10, Cali, Colombia; c/o APOYOS DIAGNOSTICOS S.A., Tulua, Valle, Colombia; Carrera 52 No. 33–84, Tulua, Valle, Colombia; DOB 17 Sep 1941; POB Tulua, Valle, Colombia; citizen Colombia; nationality Colombia; Cedula No. 17056503 (Colombia) (individual) [SDNT]

BUENO RAMIREZ, Pompeyo, c/o CREDISOL, Bogota, Colombia; c/o DROCARD S.A., Bogota, Colombia; c/o FARMACOOP, Bogota, Colombia; c/o COMERCIALIZADORA DIGLO LTDA., Bogota, Colombia; c/o ADMACOOP, Bogota, Colombia; Cedula No. 13354747 (Colombia); Passport 13354747 (Colombia) (individual) [SDNT]

BUHLER, Bruno, 57 Rue du Rhone, CH–1204 Geneva, Switzerland (individual) [IRAQ2]

BUILDING MATERIALS AND REFRACTORIES CORPORATION, P.O. Box 2241, Khartoum, Sudan [SUDAN]

BUISIR, Ibrahim, Ireland; DOB circa 1962; POB Libya; IARA Representative in Ireland (individual) [SDGT]

BUITRAGO DE HERRERA, Luz Mery, c/o INVERSIONES HERREBE LTDA., Cali, Colombia; c/o AGROPECUARIA Y REFORESTADORA HERREBE LTDA., Cali, Colombia; c/o CONSTRUEXITO S.A., Cali, Colombia; c/o VALLADARES LTDA., Cali, Colombia; c/o AGROPECUARIA BETANIA LTDA., Cali, Colombia; c/o W. HERRERA Y CIA., Cali, Colombia; c/o INVERSIONES BETANIA LTDA., Cali, Colombia; c/o INVERSIONES INVERVALLE S.A., Cali, Colombia; c/o INVERSIONES GEMINIS S.A., Cali, Colombia; c/o INVERSIONES EL GRAN CRISOL LTDA., Cali, Colombia; c/o SOCOVALLE, Cali, Colombia; DOB 24 Aug 1924; Cedula No. 29641219 (Colombia) (individual) [SDNT]

BUITRAGO MARIN, Adiela, c/o INDUSTRIA AVICOLA PALMASECA S.A., Cali, Colombia; c/o CONSTRUEXITO S.A., Cali, Colombia; DOB 28 Feb 1951; Cedula No. 31137617 (Colombia) (individual) [SDNT]

BUITRAGO MARIN, Nubia, c/o INMOBILIARIA U.M.V. S.A., Cali, Colombia; DOB 5 Apr 1948; Cedula No. 31132922 (Colombia) (individual) [SDNT]

BUITRAGO PARADA, Hector German (a.k.a. ''MARTIN LLANOS''); DOB 21 Jan 1968; POB Monterrey, Casanare, Colombia; Cedula No. 79436816 (Colombia) (individual) [SDNTK]

BUKA, Flora; DOB 25 Feb 1968; Minister of State for Special Affairs, Land and Resettlement Program (individual) [ZIMBABWE]

BUKAVU AVIATION TRANSPORT, Congo, Democratic Republic of the [LIBERIA]

BURANOV, Suhayl Fatilloevich (a.k.a. BURANOV, Mansur; a.k.a. BURANOV, Suhail; a.k.a. BURANOV, Suhail Fatilloyevich; a.k.a. BURANOV, Sukhail Fatilloevich; a.k.a. MANSUR, Suhail; a.k.a. MANSUR, Sohail; a.k.a. ''ABU HUZAIFA''), Massiv Kara-su-6, Building 12, Apartment 59, Tashkent, Uzbekistan; DOB 11 Oct 1983; alt. DOB 1983; POB Tashkent, Uzbekistan; nationality Uzbekistan (individual) [SDGT]

BURGAN INTERNATIONAL, Kuwait [CUBA]

BURHAN, Dr. Sahir (a.k.a. AL-DEEN, Saher Burhan; a.k.a. BARHAN, Dr. Sahir; a.k.a. BERHAN, Dr. Sahir; a.k.a. BURHAN, Sahir), United Arab Emirates; Baghdad, Iraq; DOB 1967; nationality Iraq (individual) [IRAQ2]

BUSINESS AIR SERVICES, Congo, Democratic Republic of the [LIBERIA]

BUTEMBO AIRLINES (a.k.a. AIR BUTEMBO), Bunia, Congo, Democratic Republic of the; Butembo, Congo, Democratic Republic of the [DRCONGO]

BUTKA, Spiro; DOB 29 May 1949 (individual) [BALKANS]

C A V J CORPORATION LTDA., Calle 166 No. 38–50, Bogota, Colombia; NIT # 830101426–9 (Colombia) [SDNT]

C Y S MEDIOS E.U., Calle 18 No. 106–98 of. 305, Cali, Colombia; NIT # 805015105–0 (Colombia) [SDNT]

C.A. V.J. CORPORATION, Calle 18, Zona Industrial 1, Intercomunal de Cabudare Barquisimeto, Lara, Venezuela; Avenida 20 (detras del Country Club), Edificio Drcenca Barquisimeto, Lara, Venezuela; Calle 14, Zona Industrial 1, Intercomunal de Cabudare Barquisimeto, Lara, Venezuela; RIF # J–30460672–9 (Venezuela) [SDNT]

C.I. OTILIA FLOWERS S.A., Vereda Las Manas, Finca La Estancia, Cajica, Cundinamarca, Colombia; Carrera 11 No. 94–02 Ofc. 405, Bogota, Colombia; NIT # 800207350–5 (Colombia) [SDNT]

C.N.A. PUBLICIDAD LTDA., Calle 74 No. 53–30, Barranquilla, Colombia; NIT # 802002664–9 (Colombia) [SDNT]

C.W. SALMAN PARTNERS, 1401 Brickell Avenue, Miami, FL 33131; US FEIN 65–0111089 (United States) [SDNT]

CABALLERO, Oliverio, c/o COOPIFARMA, Bucaramanga, Colombia; c/o COPSERVIR LTDA., Bogota, Colombia; c/o CAJA SOLIDARIA, Bogota, Colombia; Calle 47B Sur Bloque 7–8 Manz. E ap. 101, Bogota, Colombia; Cedula No. 79473097 (Colombia) (individual) [SDNT]

CABANA GUILLEN, Sixto Antonio (a.k.a. ''BIOHO, Domingo''; a.k.a. ''BIOJA, Domingo''); DOB 15 Jun 1955; POB Orihueca Cienaga, Magdalena, Colombia; citizen Colombia; nationality Colombia; Cedula No. 19500634 (Colombia) (individual) [SDNTK]

CABDULLAAH, Ciise Maxamed, Mosque in Via Quaranta, Milan, Italy; DOB 8 Oct 1974; POB Somalia; nationality Somalia; arrested 31 Mar 2003 (individual) [SDGT]

CABLES NACIONALES S.A. (a.k.a. CANAL S.A.), Calle 111 No. 34–139, Barranquilla, Colombia; NIT # 802005017–7 (Colombia) [SDNT]

CABRERA DIAZ, Hermilo (a.k.a. CABRERA DIAZ, Ermilo; a.k.a. ''BERTULFO''); DOB 25 Nov 1941; POB Huila, Colombia; citizen Colombia; nationality Colombia; Cedula No. 9680080 (Colombia) (individual) [SDNTK]

CABRERA, Jose Benito (a.k.a. CABRERA CUEVAS, Jose Benito; a.k.a. ''EL MONO FABIAN''; a.k.a. ''FABIAN RAMIREZ''); DOB 6 Jul 1963; alt. DOB 5 Jul 1965; POB El Paujil, Caqueta, Colombia; Cedula No. 96329309 (Colombia) (individual) [SDNTK]

CADAVID MAYA, Uriel, c/o COPSERVIR LTDA., Bogota, Colombia; c/o COOPERATIVA DE TRABAJO ASOCIADO ACTIVAR, Bogota, Colombia; Carrera 9 No. 9–65, Florida, Valle, Colombia; Carrera 6 No. 11–43 of. 505, Cali, Colombia; DOB 16 Nov 1967; Cedula No. 16885028 (Colombia) (individual) [SDNT]

CADENA COLLAZOS, Francisco Antonio (a.k.a. MEDINA, Oliverio; a.k.a. ''CURA CAMILO''; a.k.a. ''EL CURA''; a.k.a. ''HUESITO''; a.k.a. ''OLIVO''; a.k.a. ''PACHO''), Brazil; Colombia; DOB 01 Jan 1947; citizen Colombia; Cedula No. 4904771 (Colombia); International FARC Commission Member for Brazil (individual) [SDNTK]

CADENAS VIRAMONTES, Porfirio Miguel, c/o OVERSEAS TRADING COMPANY S.A., Guatemala City, Guatemala; Calle Justo Sierra 1963, Colonia Ladron de Guevara, Guadalajara, Jalisco, Mexico; c/o MC OVERSEAS TRADING COMPANY S.A. DE C.V., Guadalajara, Mexico; Calle Mar del Sur No 2075 Int. 1, Colonia Fraccionamiento Country Club, Guadalajara, Jalisco, Mexico; Calle Nelson 421-B, Guadalajara, Jalisco, Mexico; c/o INMOBILIUM INVESTMENT CORP., Panama City, Panama; DOB 12 Jun 1959; POB Guadalajara, Jalisco, Mexico; C.U.R.P. CAUP590612HJCDRR09 (Mexico); NIT # 2665307–9 (Guatemala); Passport 97140096573 (Mexico); RFC CAVP-590612-AD1 (Mexico) (individual) [SDNT]

CAFE ANDINO S.L., Calla Cochabamba 2, Madrid, Madrid, Spain; C.I.F. B81891244 (Spain) [SDNT]

CAICEDO COLORADO, Abelardo (a.k.a. ''SOLIS ALMEIDA''); DOB 3 Mar 1960; POB Mercaderes, Cauca, Colombia; citizen Colombia; nationality Colombia (individual) [SDNTK]

CAICEDO GALLEGO, Maria Nury (a.k.a. CAYCEDO GALLEGO, Maria Nury), 85 Brainerd Road, Townhouse 9, Allston, MA 02134; 18801 Collins Ave., Apt. 322–3, Sunny Isles Beach, FL 33160; c/o INVERSIONES AGROINDUSTRIALES DEL

OCCIDENTE LTDA., Bogota, Colombia; Calle 2 Casa No. 4–13, Barrio San Isidro, Venezuela; c/o DIMABE LTDA., Bogota, Colombia; Calle 90 No. 10–05, Bogota, Colombia; Avenida 11 No. 7N–166, Cali, Colombia; c/o COMPANIA AGROPECUARIA DEL SUR LTDA., Bogota, Colombia; Diagonal 130 No. 7–20, Apt. 806, Bogota, Colombia; c/o COLOMBO ANDINA COMERCIAL COALSA LTDA., Bogota, Colombia; c/o SALOME GRAJALES Y CIA. LTDA., Bogota, Colombia; DOB 16 Nov 1956; POB Tulua, Valle, Colombia; citizen Colombia; nationality Colombia; Cedula No. 31191388 (Colombia); Passport AE889461 (Colombia); alt. Passport AH286341 (Colombia); SSN 594–33–3352 (United States) issued 1993 (individual) [SDNT]

CAICEDO ROJAS, Jorge Ernesto, c/o HOTEL LA CASCADA S.A., Girardot, Colombia; Calle 82 No 11–37 Ofc. 504, Bogota, Colombia; c/o PROMOCIONES E INVERSIONES LAS PALMAS S.A., Bogota, Colombia; DOB 21 Oct 1955; POB Bogota, Colombia; Cedula No. 3227987 (Colombia) (individual) [SDNT]

CAICEDO VERGARA, Nohemy (a.k.a. CAICEDO VERGARA, Nohemi), c/o INDUSTRIA DE PESCA SOBRE EL PACIFICO S.A., Buenaventura, Colombia; Km. 4 El Pinal, Buenaventura, Colombia; Cedula No. 31375185 (Colombia) (individual) [SDNT]

CAJA AMIGO EXPRESS, S.A. DE C.V., Boulevard Agua Caliente, Tijuana, Baja California, Mexico; 660 Bay Boulevard, Suite 205, Chula Vista, CA 91910; Calle 4, Entre Constitucion y Revolucion, Zona Centro, Tijuana, Baja California, Mexico; Diaz Ordaz, 9B Del Prado, Entre Bugambilias y Azucenas, Tijuana, Baja California, Mexico; Calle 4, Entre Conot & Revo, Tijuana, Baja California, Mexico; R.F.C. CAE–990224-BA3 (Mexico) [SDNTK]

CAJA SOLIDARIA (a.k.a. COOPERATIVA DE AHORRO Y CREDITO DE COLOMBIA; a.k.a. COOPERATIVA MULTIACTIVA DE COMERCIALIZACION Y SERVICIOS), Avenida 22 No. 40–77 of. 202, Bogota, Colombia; Calle 12B No. 27–39, Bogota, Colombia; Carrera 13A No. 28–38 of. 216 Parque, Bogota, Colombia; Transversal 29 No. 35A–29, Bogota, Colombia; Avenida 22 No. 44–70 of. 202, Bogota, Colombia; Carrera 13A No. 89–38 of. 713, Bogota, Colombia; NIT # 830033942–6 (Colombia) [SDNT]

CALDERON ASCANIO, Mercedes, c/o SEGECOL LTDA., Bucaramanga, Colombia; Cedula No. 63319306 (Colombia) (individual) [SDNT]

CALDERON ASCANIO, Reinaldo (a.k.a. CALDERON ASCANIO, Reynaldo), c/o COOPERATIVA DE TRABAJO ASOCIADO ACTIVAR, Bogota, Colombia; c/o MEGAPHARMA LTDA., Bogota, Colombia; c/o COOPIFARMA, Bucaramanga, Colombia; Calle 54 No. 23–10, Bucaramanga, Colombia; DOB 12 Jun 1978; Cedula No. 13541010 (Colombia) (individual) [SDNT]

CALDERON COLLAZOS, Gonzalo, c/o GEOPLASTICOS S.A., Cali, Colombia; c/o CONSTRUCCIONES PROGRESO DEL PUERTO S.A., Puerto Tejada, Colombia; c/o BANANERA AGRICOLA S.A., Santa Marta, Colombia; c/o COMPANIA DE FOMENTO MERCANTIL S.A., Cali, Colombia; DOB 29 Sep 1952; POB Cali, Valle, Colombia; Cedula No. 14989778 (Colombia); Passport 14989778 (Colombia) (individual) [SDNT]

CALDERON DE TRUJILLO, Nubia (a.k.a. ''ESPERANZA''), Colombia; DOB 25 Mar 1956; citizen Colombia; Cedula No. 36159126 (Colombia); International FARC Commission Member for Ecuador (individual) [SDNTK]

CALDERON OLIVAR, Rafael Alfredo, c/o DISTRIBUIDORA DE DROGAS LA REBAJA PEREIRA S.A., Pereira, Colombia; c/o LITOPHARMA, Barranquilla, Colombia; c/o COOMULCOSTA, Barranquilla, Colombia; Cedula No. 19582440 (Colombia) (individual) [SDNT]

CALDERON VELANDIA, Nilson (a.k.a. ''VILLA''), Colombia; DOB 18 Jul 1974; POB Mogotes, Santander, Colombia; citizen Colombia; nationality Colombia; Cedula No. 91348897 (Colombia); Passport AK040618 (Colombia) (individual) [SDNTK]

CALGARY FARM, Mazowe, Zimbabwe [ZIMBABWE]

CALI @ TELE.COM LTDA. (a.k.a. HOLA TELECOMUNICACIONES), Calle 13 No. 80–60 Loc. 224, Cali, Colombia; NIT # 805021515–1 (Colombia) [SDNT]

CALLE SERNA, Luis Enrique (a.k.a. CALLE SERNA, Manuel; a.k.a. ''COMBA''; a.k.a. ''COMBATIENTE''), Carrera 24C No. 33B–108, Santa Monica, Casanare, Colombia; Calle 1 No. 56–109, Seminario B, Caro 31, Cali, Colombia; Avenida 8N No. 9N–57, Cali, Colombia; DOB 16 Aug 1976; POB Cali, Colombia; alt. POB Armenia, Quindio, Colombia; citizen Colombia; Cedula No. 94487319 (Colombia) issued 31 Oct 1994; Passport AI811078 (Colombia) issued 09 May 2003; alt. Passport 94487319 (Colombia) issued 09 May 2003 expires 09 May 2013; alt. Passport AH454934 (Colombia) (individual) [SDNT]

CALVO LOMBANA, Gabriel Andres, c/o FISHING ENTERPRISE HOLDING INC., Panama City, Panama; c/o AQUAMARINA ISLAND INTERNATIONAL CORPORATION, Panama City, Panama; c/o ORIMAR LTDA., Bogota, Colombia; DOB 20 Aug 1935; POB Bogota, Colombia; Cedula No. 2859105 (Colombia) (individual) [SDNT]

CAMACHO BERNAL, Jose Edilberto, Colombia; DOB 28 Feb 1954; POB Venecia, Cundinamarca, Colombia; citizen Colombia; nationality Colombia; Cedula No. 11374416 (Colombia); Passport AI222190 (Colombia) (individual) [SDNTK]

CAMACHO VALLEJO ASESORES E.U. (a.k.a. CAMACHO VALLEJO CONTADORES), Calle 23BN No. 5N–37, Ofc. 202, Cali, Colombia; NIT # 805031109–7 (Colombia) [SDNT]

CAMACHO VALLEJO, Francisco Jose, c/o AGROPECUARIA LINDARAJA S.A., Cali, Colombia; c/o INVERSIONES BRASILAR S.A., Bogota, Colombia; c/o ILOVIN S.A., Bogota, Colombia; c/o CRETA S.A., La Union, Valle, Colombia; c/o CANADUZ S.A., Cali, Colombia; c/o CAMACHO VALLEJO ASESORES E.U., Cali, Colombia; c/o AGRONILO S.A., Toro, Valle, Colombia; Calle 23 BN No. 5–37 of. 202, Cali, Colombia; Carrera 37 No. 6–36, Cali, Colombia; c/o JOSAFAT S.A., Tulua, Valle, Colombia; Cedula No. 14443381 (Colombia) (individual) [SDNT]

CAMACHO VALLEJO, Javier, c/o INVERSIONES AGROINDUSTRIALES DEL OCCIDENTE LTDA., Bogota, Colombia; Carrera 65 No. 14C–90, Casa 65, Cali, Colombia; c/o COMPANIA AGROPECUARIA DEL SUR LTDA., Bogota, Colombia; c/o CAMACHO VALLEJO ASESORES E.U., Cali, Colombia; citizen Colombia; nationality Colombia; Cedula No. 16614154 (Colombia) (individual) [SDNT]

CAMARGO, Norbei (a.k.a. CAMARGO, Norbey; a.k.a. TRIANA, Hermer; a.k.a. ''JAMES PATAMALA''; a.k.a. ''JAMES PATAPALO''; a.k.a. ''MUERTA PARADO''); DOB 5 Aug 1965; POB El Paujil, Caqueta, Colombia; citizen Colombia; nationality Colombia; Cedula No. 17702895 (Colombia) (individual) [SDNTK]

CAMBIOS EL TREBOL, Avenida Calle 26 No 69C–03 Local 214, Bogota, Colombia; Commercial Registry Number 1404087 (Colombia) [SDNTK]

CAMBIOS EURO LTDA, Carrera 7 No. 115–60 Local F–109, Bogota, Colombia; NIT # 830102482–6 (Colombia) [SDNTK]

CAMBIOS NASDAQ LTDA, Avenida 15 No. 77–05 Local 2–106, Bogota, Colombia; NIT # 8301284123 (Colombia) [SDNTK]

CAMBIOS PALMILLA S.A. DE C.V., Carretera Santa Barbara KM 3, Colonia Almancena, Hidalgo del Parral, Chihuahua 33800, Mexico; Calle Francisco Moreno S/N, Hidalgo del Parral, Chihuahua 33800, Mexico; Avenida Ortiz Mena 34A, Hidalgo del Parral, Chihuahua 33800, Mexico; Calle Maclovio Herrera 97A, Hidalgo del Parral, Chihuahua 33800, Mexico [SDNTK]

CAMBIOS Y CAPITALES S.A. (a.k.a. C & CAP S.A.), Centro Comercial New Point, Avenida Providencia No. 1–35 Local 106, San Andres, Colombia; Calle 12N No. 3N–12, Cali, Colombia; Transversal 71 No. 26–94 Sur Local 4506, Bogota, Colombia; Calle 99 No. 11A–41, Bogota, Colombia; Calle 29 No. 27–56 Local 102, Palmira, Valle, Colombia; Calle 19 No. 6–48 Local 314–315, Pereira, Colombia; Carrera 4 No. 10–62 Local 15, Cartago, Valle, Colombia; Carrera 44 No. 6A–43 piso 2, Cali, Colombia; Carrera 43A No. 34–95 Local 268, Medellin, Colombia; Calle 27 No. 26–60 Local 105 D, Tulua, Valle, Colombia; Carrera 15 No. 93–60 Local 1–36, Bogota, Colombia; NIT # 805001015–5 (Colombia) [SDNT]

CAMPO LIBRE A LA DIVERSION E.U. (a.k.a. PARQUE YAKU; a.k.a. YAKU E.U.), Calle 15 No. 27–33, Yumbo, Valle, Colombia; NIT # 805026848–1 (Colombia) [SDNT]

CAMPO RAMIREZ, Guido, c/o VALORCORP S.A., Bogota, Colombia; Cedula No. 16218589 (Colombia) (individual) [SDNT]

CAMPO VERDE LTDA., Carrera 54 No. 75–97 piso 2, Barranquilla, Colombia; NIT # 800204479–2 (Colombia) [SDNT]

CANADUZ S.A., Calle 23BN No. 5N–37, Ofc. 202, Cali, Colombia; NIT # 805024035–1 (Colombia) [SDNT]

CANAVAL LANDAZURI, Enrique Antonio, c/o ASOCIACION CIVIL LOS PROMOTORES AERONAUTICOS, Lima, Peru; c/o VUELA PERU S.A.C., Lima, Peru; Avenida Pedro Venturo 687, URB Higuereta, Lima, Peru; DOB 06 Jan 1953; LE Number 07790775 (Peru) (individual) [SDNTK]

CANIPEL S.A. (a.k.a. CANAPEL S.A.), c/o EMPRESA DE NAVEGACION MAMBISA, Apartado 543, San Ignacio 104, Havana, Cuba [CUBA]

CANO AGUDELO S EN C, Finca La Alambra, Alcala, Valle, Colombia; NIT # 821002095–7 (Colombia) [SDNT]

CANO ALZATE, Yolanda Sofia, c/o GAVIOTAS LTDA., Colombia; DOB 25 Apr 1957; POB Cartago, Valle; Cedula No. 31399608 (Colombia); Passport AH506324 (Colombia) (individual) [SDNT]

CANO CORREA, Jhon Eidelber (a.k.a. CANO, Jhonny; a.k.a. CARDONA RIBILLAS, Alejandro; a.k.a. ''FLECHAS''), Carrera 28 No. 7–35, Cali, Colombia; Calle 18 No. 8–16, Cartago, Valle, Colombia; DOB 13 Dec 1963; POB El Aguila, Valle, Colombia; citizen Colombia; nationality Colombia; Cedula No. 16217170 (Colombia); alt. Cedula No. 16455750 (Colombia); Passport AC877214 (Colombia); alt. Passport AF133955 (Colombia) (individual) [SDNT]

CARACAS VIVEROS, Oscar (a.k.a. ''EL NEGRO OSCAR''); DOB 15 Nov 1967; POB Colombia; Cedula No. 96351739 (Colombia) (individual) [SDNTK]

CARBONICA, S.A., Panama [CUBA]

CARDENAS GONGORA, Luis Fernando, c/o LATINFARMACOS S.A., Quito, Ecuador; Cedula No. 10105501 (Colombia); RUC # 1719649129001 (Ecuador) (individual) [SDNT]

CARDENAS GUILLEN, Osiel (a.k.a. CARDENAS CASTILLO, Osiel; a.k.a. CARDENAS GILLEN, Osiel; a.k.a. CARDENAS GUILLEN, Ociel; a.k.a. CARDENAS GUILLEN, Oscar; a.k.a. CARDENAS GUILLEN, Oziel; a.k.a. CARDENAS GULLEN, Osiel; a.k.a. CARDENAS TUILLEN, Osiel; a.k.a. SALINA AGUILAR, Jorge; a.k.a. SALINAS AGUILAR, Jorge); DOB 18 May 1967; POB Mexico (individual) [SDNTK]

CARDONA ACEVEDO, Carlos Arturo, c/o RIONAP COMERCIO Y REPRESENTACIONES S.A., Quito, Ecuador; Cedula No. 4383319 (Colombia); RUC # 1791819624001 (Ecuador) (individual) [SDNT]

CARDONA GARCIA, Diomiro, Carrera 4 No. 12–20 of. 206, Cartago, Valle, Colombia; c/o GANADERIA EL VERGEL LTDA., Cartago, Valle, Colombia; c/o AGRICOLA DOIMA DEL NORTE DEL VALLE LTDA., Cartago, Valle, Colombia; Carrera 1 No. 12–53, Cartago, Valle, Colombia; c/o GANADERIAS BILBAO LTDA., Cartago, Valle, Colombia; c/o INMOBILIARIA PASADENA LTDA., Cartago, Valle, Colombia; c/o ORGANIZACION LUIS HERNANDO GOMEZ BUSTAMANTE Y CIA. S.C.S., Cartago, Valle, Colombia; c/o INMOBILIARIA EL ESCORIAL LTDA., Cartago, Valle, Colombia; c/o VISCAYA LTDA., Cartago, Valle, Colombia; c/o INMOBILIARIA LINARES LTDA., Cartago, Valle, Colombia; Cedula No. 6233272 (Colombia); Passport 6233272 (Colombia) (individual) [SDNT]

CARDONA OCHOA, Carlos Julio, c/o AUREAL INMOBILIARIA LTDA., Bogota, Colombia; c/o GRUPO SANTA LTDA., Cali, Colombia; DOB 22 Sep 1954; Cedula No. 7524996 (Colombia) (individual) [SDNT]

CARDONA RUEDA, Fernando Ivan, c/o COINTERCOS S.A., Bogota, Colombia; c/o DROGAS LA REBAJA BOGOTA S.A., Bogota, Colombia; c/o LABORATORIOS KRESSFOR DE COLOMBIA S.A., Bogota, Colombia; DOB 29 Apr 1957; Cedula No. 16607447 (Colombia) (individual) [SDNT]

CARGO AIRCRAFT LEASING CORP., 2310 NW 55TH Court, Suite 120, Ft. Lauderdale, FL 33309; Business Registration Document # 93000004034 (United States); US FEIN 65–0389435 [BPI-SDNTK]

CARGO FREIGHT INTERNATIONAL (a.k.a. CARGO FRET INTERNATIONAL, SPRL), P. O. Box 873, Goma, Congo, Democratic Republic of the; Kigali, Rwanda; Kinshasa, Congo, Democratic Republic of the [DRCONGO]

CARIBBEAN BEACH PARK, 1137 Sugar Mill Road, Montego Bay, Jamaica; Rosehall Main Road, Rosehall, Jamaica [SDNTK]

CARIBBEAN HAPPY LINES (a.k.a. CARIBBEAN HAPPY LINES CO.), Panama [CUBA]

CARIBBEAN PRINCESS (vessel) [CUBA]

CARIBBEAN PRINCESS SHIPPING LTD., c/o EMPRESA DE NAVEGACION MAMBISA, Apartado 543, San Ignacio 104, Havana, Cuba [CUBA]

CARIBBEAN QUEEN (vessel) [CUBA]

CARIBBEAN QUEEN SHIPPING LTD., c/o EMPRESA DE NAVEGACION MAMBISA, Apartado 543, San Ignacio 104, Havana, Cuba [CUBA]

CARIBBEAN SALVOR (vessel) [CUBA]

CARIBBEAN SHOWPLACE LTD (f.k.a. FLAMINGO CLUB), Rosehall Main Road, Rosehall, Jamaica; Tropigala Night Club, Ironshore, Montego Bay, Jamaica [SDNTK]

CARIBERIA, S.A., Spain [CUBA]

CARIBSUGAR INTERNATIONAL TRADERS, S.A., 125–133 Camden High Street, London NW1 7JR, United Kingdom [CUBA]

CARIBSUGAR, S.A., Panama [CUBA]

CARISUB, S.A., Panama [CUBA]

CARLOS SAIEH Y CIA. S.C.S., Carrera 74 No. 76—150, Barranquilla, Atlantico, Colombia; NIT # 800180437–8 (Colombia) [SDNT]

CARMONA, Juan Manuel, c/o INVERSIONES RODRIGUEZ MORENO, Cali, Colombia; c/o INVERSIONES ARA LTDA., Cali, Colombia; c/o INVERSIONES RODRIGUEZ ARBELAEZ, Cali, Colombia; DOB 14 Jan 1933; Cedula No. 3524135 (Colombia) (individual) [SDNT]

CARO PEREZ, Maria Eugenia, c/o COMEDICAMENTOS S.A., Bogota, Colombia; c/o GLAJAN S.A., Bogota, Colombia; c/o FOGENSA S.A., Bogota, Colombia; DOB 17 Sep 1971; Cedula No. 52583651 (Colombia); Passport 52583651 (Colombia) (individual) [SDNT]

CARO QUINTERO, Miguel Angel; DOB 9 Mar 1963; POB Mexico (individual) [SDNTK]

CARO QUINTERO, Rafael (a.k.a. CARO QUINTERO, Raphael); DOB 12 Dec 1952; alt. DOB 24 Oct 1955; alt. DOB 24 Nov 1955; POB Mexico (individual) [SDNTK]

CARRASCO MIRANDA, Willebaldo, Calle 11, 1815 Plana Centro, Chihuahua, Chihuahua CP 31000, Mexico; c/o CORRALES SAN IGNACIO S.P.R. DE R.L. DE C.V., Saucillo, Chihuahua, Mexico; DOB 06 Oct 1958; POB Chihuahua, Chihuahua, Mexico; citizen Mexico; nationality Mexico; C.U.R.P. CAMW581006HCHRRL00 (Mexico) (individual) [SDNTK]

CARRASQUILLA LORA, Jorge Eliecer, c/o CAJA SOLIDARIA, Bogota, Colombia; c/o COPSERVIR LTDA., Bogota, Colombia; Cedula No. 7461027 (Colombia) (individual) [SDNT]

CARRERA YLLADES, Marisela (a.k.a. CARRERA ILLADES, Marisela), Calle Decima No. 14, Hidalgo del Parral, Chihuahua, Mexico; c/o CAMBIOS PALMILLA S.A. DE C.V., Hidalgo del Parral, Mexico; DOB 02 Feb 1968; POB Hidalgo del Parral, Chihuahua, Mexico; citizen Mexico; nationality Mexico; C.U.R.P. CAIM680202MCHRLR08 (Mexico); alt. C.U.R.P. CAYM680202MCHRLR06 (Mexico); R.F.C. CATM–680202-T88 (Mexico) (individual) [SDNTK]

CARRERO BURBANO, Emma Alexandra, c/o LABORATORIOS KRESSFOR DE COLOMBIA S.A., Bogota, Colombia; c/o DROMARCA Y CIA. S.C.S., Bogota, Colombia; c/o FARMACOOP, Bogota, Colombia; Cedula No. 52362326 (Colombia) (individual) [SDNT]

CARRILLO CUEVAS, Mario Alberto, c/o CASA DE EMPENO RIO TIJUANA, S.A. DE C.V., Tijuana, Baja California, Mexico; Calle Lago Chaira 323, Colonia Vista Dorada, Ensenada, Baja California CP 22800, Mexico; DOB 11 Sep 1980; POB Navojoa, Sonora, Mexico (individual) [SDNTK]

CARRILLO FUENTES ORGANIZATION (a.k.a. CFO; a.k.a. JUAREZ CARTEL), Mexico [SDNTK]

CARRILLO FUENTES, Vicente (a.k.a. CARRILLO FUENTES, Andres); DOB 16 Oct 1962; POB Mexico (individual) [SDNTK]

CARRILLO LUNA, Andres Felipe, 801 Brickell Key Blvd., unit 1907, Miami, FL 33131; c/o SOCIEDAD MINERA GRIFOS S.A., El Bagre, Antioquia, Colombia; c/o INVERSIONES EL MOMENTO S.A., Medellin, Colombia; c/o CASA DEL GANADERO S.A., Medellin, Colombia; c/o GANADERIA LUNA HERMANOS LTDA., Medellin, Colombia; Calle 10C No. 25–41, Medellin, Colombia; Carrera 78A No. 33A–76, Medellin, Colombia; c/o ADMINISTRADORA GANADERA EL 45 LTDA., Medellin, Colombia; DOB 25 May 1986; alt. DOB 24 May 1986; POB Puerto Asis, Putumayo, Colombia; Cedula No. 1037572288 (Colombia); Passport RC10058210 (Colombia); alt. Passport AJ723916 (Colombia) (individual) [SDNT]

CARRILLO LUNA, Paula Andrea, 13315 SW 128 Passage, Miami, FL 33186; c/o SOCIEDAD MINERA GRIFOS S.A., El Bagre, Antioquia, Colombia; c/o GANADERIA LUNA HERMANOS LTDA., Medellin, Colombia; c/o CASA DEL GANADERO S.A., Medellin, Colombia; c/o ADMINISTRADORA GANADERA EL 45

LTDA., Medellin, Colombia; c/o INVERSIONES EL MOMENTO S.A., Medellin, Colombia; Carrera 78A No. 33A–76, Medellin, Colombia; DOB 25 Dec 1983; POB Puerto Asis, Putumayo, Colombia; Cedula No. 32244809 (Colombia); Passport AJ775569 (Colombia) (individual) [SDNT]

CARRILLO QUINTERO, Eugenio, c/o SHARPER S.A., Bogota, Colombia; c/o PATENTES MARCAS Y REGISTROS S.A., Bogota, Colombia; c/o BONOMERCAD S.A., Bogota, Colombia; c/o DECAFARMA S.A., Bogota, Colombia; c/o SHARVET S.A., Bogota, Colombia; c/o DISTRIBUIDORA AGROPECUARIA COLOMBIANA S.A., Cali, Colombia; c/o CODISA, Bogota, Colombia; DOB 30 Nov 1960; Cedula No. 73094061 (Colombia) (individual) [SDNT]

CARRILLO RODRIGUEZ, Luis Miguel, c/o VUELA PERU S.A.C., Lima, Peru; Orion 130, Ventanilla Naval, Callao, Peru; DOB 01 Dec 1961; LE Number 25693716 (Peru) (individual) [SDNTK]

CARRILLO SILVA, Armando, c/o DROGAS LA REBAJA, Cali, Colombia; c/o GRACADAL S.A., Cali, Colombia; c/o DISTRIBUIDORA DEL VALLE E.U., Cali, Colombia; c/o INVERSIONES CAMINO REAL S.A., Cali, Colombia; c/o DISTRIBUIDORA SANAR DE COLOMBIA S.A., Cali, Colombia; c/o INTERAMERICA DE CONSTRUCCIONES S.A., Cali, Colombia; c/o PROVIDA E.U., Cali, Colombia; c/o PROSPECTIVA EMPRESA UNIPERSONAL, Cali, Colombia; c/o ASESORIAS DE INGENIERIA EMPRESA UNIPERSONAL, Cali, Colombia; c/o TECNICAS CONTABLES Y ADMINISTRATIVAS, Cali, Colombia; DOB 11 Feb 1949; Cedula No. 16242828 (Colombia); Passport 16242828 (Colombia) (individual) [SDNT]

CARRION JIMENEZ, Jose Alonso, c/o BONOMERCAD S.A., Bogota, Colombia; c/o GLAJAN S.A., Bogota, Colombia; c/o SHARPER S.A., Bogota, Colombia; c/o DROCARD S.A., Bogota, Colombia; c/o FARMA 3.00 LIMITADA, Barranquilla, Colombia; c/o FOGENSA S.A., Bogota, Colombia; DOB 2 Aug 1958; Cedula No. 79000519 (Colombia); Passport 79000519 (Colombia) (individual) [SDNT]

CARS & CARS LTDA. (a.k.a. CENTRO COMERCIAL DEL AUTOMOVIL; a.k.a. COMERCIALIZADORA INTEGRAL LTDA.; a.k.a. PROYECTO CARS & CARS), Avenida Roosevelt entre carreras 38 y 38A esquinas, Cali, Colombia [SDNT]

CARVAJAL BARRIOS, Hugo Armando, Venezuela; DOB 01 Apr 1960; POB La Cruz, Venezuela; Director, Venezuelan Military Intelligence Directorate (''DGIM'') (individual) [SDNTK]

CARVAJAL SUAREZ, Luz Mary, c/o DISMERCOOP, Cali, Colombia; DOB 7 Apr 1966; Cedula No. 24626230 (Colombia) (individual) [SDNT]

CARVAJALINO, Jesus Emilio (a.k.a. ''PARIS, Andres''); DOB 15 Mar 1955; POB Bogota, Colombia; Cedula No. 3228737 (Colombia); Passport AC192015 (Colombia) (individual) [SDNTK]

CASA APOLLO, Galeria Page, Ciudad del Este, Paraguay [SDGT]

CASA DE CUBA, Mexico; Spain [CUBA]

CASA DE EMPENO RIO TIJUANA, S.A. DE C.V., Paseo de los Heroes, No. 98 Loc. 14 D C, Colonia Zona Urbana Rio Tijuana, Tijuana, Baja California CP 22010, Mexico [SDNTK]

CASA DEL GANADERO S.A., Carrera 49A No. 48Sur-60 Bod. 102, Medellin, Colombia; Almacen Troncal Principal la Costa Jardin, Caceres, Antioquia, Colombia; Carrera 49A No. 61Sur-540 Bod. 137, Medellin, Colombia; NIT # 811034345–4 (Colombia) [SDNT]

CASA DEL REPUESTO, Panama City, Panama [CUBA]

CASA GRAJALES S.A., Apartado Aereo 20288, Cali, Colombia; Factoria La Rivera, La Union, Valle, Colombia; Zona Industrial Los Mangos, Cali, Colombia; Carrera 10 No. 31–01, Cali, Colombia; Calle 96 No. 11B–39, Bogota, Colombia; NIT # 891902138–1 (Colombia) [SDNT]

CASA HAMZE, Number 313, Fourth Floor, Galeria Page, Regimiento Piribebuy Avenue, Ciudad del Este, Paraguay; Paraguayan tax identification number BAHA 6301000 [SDGT]

CASABLANCA (vessel) [CUBA]

CASILIMAS ESCOBAR, Lia Patricia, c/o SU SERVICIO SOCIEDAD LTDA., Barranquilla, Colombia; c/o COPSERVIR LTDA., Bogota, Colombia; Cedula No. 32761550 (Colombia) (individual) [SDNT]

CASQUETE VARGAS, Orlando, c/o PENTA PHARMA DE COLOMBIA S.A., Bogota, Colombia; c/o LABORATORIOS GENERICOS VETERINARIOS, Bogota, Colombia; c/o ALFA PHARMA S.A., Bogota, Colombia; c/o LABORATORIOS KRESSFOR, Bogota, Colombia; DOB 7 Jan 1957; Cedula No. 19270159 (Colombia) (individual) [SDNT]

CASTANEDA CHACON, Olga Patricia, c/o ARCA DISTRIBUCIONES LTDA., Bogota, Colombia; c/o COOPERATIVA DE TRABAJO ASOCIADO ACTIVAR, Bogota, Colombia; Cedula No. 51870004 (Colombia) (individual) [SDNT]

CASTANEDA GIRALDO, Maria Teresa (a.k.a. CASTANEDA DE PABON, Maria Teresa), c/o PROYECTOS Y SOLUCIONES INMOBILIARIA LTDA., Bogota, Colombia; c/o INVERSIONES MPS S.A., Bogota, Colombia; c/o GERENCIA DE PROYECTOS Y SOLUCIONES LTDA., Bogota, Colombia; DOB 3 Aug 1957; POB Colombia; Cedula No. 35455961 (Colombia) (individual) [SDNT]

CASTANEDA QUINTERO, Luis Alberto, c/o PENTA PHARMA DE COLOMBIA S.A., Bogota, Colombia; c/o FARMACOOP, Bogota, Colombia; c/o PENTACOOP LTDA., Bogota, Colombia; c/o DECAFARMA S.A., Bogota, Colombia; c/o LABORATORIOS KRESSFOR DE COLOMBIA S.A., Bogota, Colombia; DOB 12 Feb 1938; Cedula No. 6064977 (Colombia) (individual) [SDNT]

CASTANEDA RAMIREZ, Lorena Constanza, c/o DROCARD S.A., Bogota, Colombia; c/o PENTA PHARMA DE COLOMBIA S.A., Bogota, Colombia; c/o PENTACOOP LTDA., Bogota, Colombia; c/o DECAFARMA S.A., Bogota, Colombia; c/o DROMARCA Y CIA. S.C.S., Bogota, Colombia; c/o MATERIAS PRIMAS Y SUMINISTROS S.A., Bogota, Colombia; DOB 13 May 1971; Cedula No. 52071011 (Colombia); Passport 52071011 (Colombia) (individual) [SDNT]

CASTANEDA, Martha Helena, c/o SOLUCIONES COOPERATIVAS, Bogota, Colombia; Cedula No. 41658669 (Colombia) (individual) [SDNT]

CASTANO ARANGO, Fernando, c/o INDUSTRIA AVICOLA PALMASECA S.A., Cali, Colombia; c/o AGROPECUARIA LA ROBLEDA S.A., Cali, Colombia; DOB 9 Jan 1949; Cedula No. 14953602 (Colombia) (individual) [SDNT]

CASTANO CASTANO, Consuelo, Carrera 20 No. 66–34, Bogota, Colombia; c/o TODOBOLSAS Y COLSOBRES, Bogota, Colombia; DOB 25 Feb 1951; POB Pereira, Risaralda, Colombia; Cedula No. 29493435 (Colombia); Passport 24943435 (Colombia) (individual) [SDNT]

CASTANO GIL, Carlos; DOB 15 May 1965; POB Amalfi, Antioquia, Colombia; Cedula No. 70564150 (Colombia) (individual) [SDNTK]

CASTANO GIL, Hector; DOB 24 Mar 1959; POB Amalfi, Antioquia, Colombia; Cedula No. 3371328 (Colombia) (individual) [SDNTK]

CASTANO GIL, Jose Vicente; DOB 2 Jul 1957; Cedula No. 3370637 (Colombia) (individual) [SDNTK]

CASTANO PATINO, Maria Janet, c/o CONSTRUVIDA S.A., Cali, Colombia; DOB 26 Oct 1958; Cedula No. 31149394 (Colombia) (individual) [SDNT]

CASTELL VALDEZ, Osvaldo Antonio, Panama (individual) [CUBA]

CASTELLANOS GARZON, Henry (a.k.a. ''COMANDANTE ROMANA''; a.k.a. ''EDISON ROMANA''; a.k.a. ''ROMANA''); DOB 20 Mar 1965; POB San Martin, Meta, Colombia; Cedula No. 17353695 (Colombia) (individual) [SDNTK]

CASTELLANOS SANCHEZ, Federico Ernesto, c/o MC OVERSEAS TRADING COMPANY S.A. DE C.V., Guadalajara, Mexico; Calle Tauro No. 4090, Colonia Juan Manuel Vallarte, Zapopan, Jalisco, Mexico; DOB 11 Jan 1947; POB Tototlan, Jalisco, Mexico (individual) [SDNT]

CASTRILLON CRUZ, Maria Leonor, c/o AGROPECUARIA LA ROBLEDA S.A., Cali, Colombia; DOB 25 Oct 1922; Cedula No. 31138584 (Colombia) (individual) [SDNT]

CASTRILLON VASCO, Jhon Jairo, c/o INVERSIONES Y REPRESENTACIONES S.A., Medellin, Colombia; c/o HOTEL LA CASCADA S.A., Girardot, Colombia; c/o FLORIDA SOCCER CLUB S.A., Medellin, Colombia; DOB 30 Mar 1960; POB Medellin, Colombia; Cedula No. 71603587 (Colombia) (individual) [SDNT]

CASTRO ARIAS, Libardo (a.k.a. ARIAS CASTRO, Libardo), c/o COMEDICAMENTOS S.A., Bogota, Colombia; c/o GLAJAN S.A., Bogota, Colombia; c/o BONOMERCAD S.A., Bogota, Colombia; c/o SHARPER S.A., Bogota, Colombia; c/o FOGENSA S.A., Bogota, Colombia; c/o DECAFARMA S.A., Bogota, Colombia; DOB 13 Oct 1933; Cedula No. 2312291 (Colombia); Passport 2312291 (Colombia) (individual) [SDNT]

CASTRO CURE Y CIA. S. EN C., Calle 111 No. 34–139, Barranquilla, Colombia; NIT # 802001885–5 (Colombia) [SDNT]

CASTRO DE SANTACRUZ, Amparo, c/o MIRALUNA LTDA., Cali, Colombia; c/o INMOBILIARIA SAMARIA LTDA., Cali, Colombia; c/o INVERSIONES SANTA LTDA., Cali, Colombia; c/o INVERSIONES INTEGRAL LTDA., Cali, Colombia; c/o URBANIZACIONES Y CONSTRUCCIONES LTDA., DE CALI, Cali, Colombia; c/o COMERCIALIZACION Y FINANCIACION DE AUTOMOTORES S.A., Cali, Colombia; c/o SAMARIA LTDA., Cali, Colombia; DOB 13 Jan 48; alt. DOB 13 Jan 46; alt. DOB 14 Apr 59; Cedula No. 38983611 (Colombia); Passport AA429676 (Colombia); alt. Passport PE027370 (Colombia) (individual) [SDNT]

CASTRO GARZON, Ricardo (a.k.a. LINEROS GARZON, Rodolfo; a.k.a. ''CAYO''), c/o CASTRO CURE Y CIA. S.C.S., Barranquilla, Colombia; c/o CURE SABAGH Y CIA. S.C.S., Barranquilla, Colombia; c/o FUDIA LTDA., Barranquilla, Colombia; c/o CABLES NACIONALES S.A., Barranquilla, Colombia; c/o INVERSIONES AGROPECUARIA ARIZONA LTDA., Barranquilla, Colombia; DOB 13 Dec 1960; POB Barranquilla, Colombia; Cedula No. 8715520 (Colombia) (individual) [SDNT]

CASTRO GARZON, Victor Hugo (a.k.a. ''CABEZON''), Guadalajara, Jalisco, Mexico; DOB 10 May 1965; POB Barranquilla, Colombia; Cedula No. 72137257 (Colombia) (individual) [SDNT]

CASTRO PAEZ, Gerardo, c/o ORIMAR LTDA., Bogota, Colombia; c/o CABLES NACIONALES CANAL S.A., Barranquilla, Colombia; DOB 16 Mar 1974; POB Barranquilla, Colombia; Cedula No. 72196638 (Colombia) (individual) [SDNT]

CASTRO PAEZ, Jhon Paul, c/o CABLES NACIONALES CANAL S.A., Barranquilla, Colombia; POB Colombia; Cedula No. 72223501 (Colombia) (individual) [SDNT]

CASTRO SANCHEZ, Nelson, c/o ADMACOOP, Bogota, Colombia; c/o FARMACOOP, Bogota, Colombia; c/o CODISA, Bogota, Colombia; DOB 18 May 1953; Cedula No. 19308824 (Colombia); Passport 19308824 (Colombia) (individual) [SDNT]

CASTRO VERGARA, Sandra, c/o INVERSIONES EL PENON S.A., Cali, Colombia; DOB 24 Nov 1964; Cedula No. 31924082 (Colombia) (individual) [SDNT]

CAUCALITO LTDA. (f.k.a. GANADERA; f.k.a. GANADERIA LTDA.), Carrera 4 12–41 of. 1403, Edificio Seguros Bolivar, Cali, Colombia; Apartado Aereo 10077, Cali, Colombia; NIT # 800029160–9 (Colombia) [SDNT]

CAVIEDES CRUZ, Leonardo, c/o CAVIEDES DILEO Y CIA S.C.S., Cali, Colombia; Calle 21 Norte No. 3N–84, Cali, Colombia; c/o INVERSIONES SANTA LTDA., Cali, Colombia; DOB 23 Nov 1952; Cedula No. 16593470 (Colombia); Passport AB151486 (Colombia); alt. Passport OC444290 (Colombia); alt. Passport AC444270 (Colombia) (individual) [SDNT]

CAVIEDES DILEO Y CIA. S.C.S., Calle 21 Norte No. 3N–64, Cali, Colombia; NIT # 800113437–2 (Colombia) [SDNT]

CAVIEDES LOPEZ, Gloria Ines, c/o DISTRIBUCIONES GLOMIL LTDA., Cali, Colombia; DOB 20 Oct 1959; Cedula No. 42002286 (Colombia); Passport 42002286 (Colombia) (individual) [SDNT]

CAZARES SALAZAR, Blanca Margarita (a.k.a. CAZARES DE MEZA, Blanca Margarita; a.k.a. CAZARES GASTELLUM, Blanca Margarita; a.k.a. CAZARES GASTELUM, Blanca; a.k.a. CAZARES MESA, Blanca; a.k.a. CAZARES, Blanca; a.k.a. CAZAREZ MESA, Blanca; a.k.a. CAZAREZ SALAZAR DE MEZA, Blanca Margarita; a.k.a. CAZAREZ SALAZAR, Blanca Margarita; a.k.a. CAZAREZ SALAZAR, Chiquis; a.k.a. CAZAREZ, Chiquis; a.k.a. GASTELLUM CAZARES, Blanca Margarita; a.k.a. GASTELLUM, Blanca Margarita; a.k.a. GASTELUM CAZAREZ DE MEZA, Blanca Margarita), Calle G. Robles No. 152, Culiacan, Sinaloa, Mexico; 9311 Clancey Avenue, Downey, CA 90240; c/o CHIQUIS CAZAREZ CASA DE CAMBIO, Sepulveda con Juarez y Grandos, Culiacan, Sinaloa, Mexico; Urban Lot 11, Manzana 35, Zona 2, Culiacan, Sinaloa, Mexico; Avenida Ignacio Aldama No. 257 Norte, Culiacan, Sinaloa, Mexico; c/o TOYS FACTORY, S.A. DE C.V., Tijuana, Baja California, Mexico; Avenida Rodolfo G. Robles No. 153 South, Colonia Jorge Almada, Culiacan, Sinaloa, Mexico; c/o SIN-MEX IMPORTADORA, S.A. DE C.V., Mexico, Distrito Federal, Mexico; Avenida Rodolfo G. Robles No. 166, Colonia Jorge Almada, Culiacan, Sinaloa, Mexico; Calle Mariano Escobedo No. 366, #102, Culiacan, Sinaloa, Mexico; Calle Juan de Dios Batiz No. 139, Culiacan, Sinaloa, Mexico; Calle Mariano Escobedo No. 366, Apt. 102, Colonia Centro, Culiacan, Sinaloa, Mexico; DOB 18 Sep 1954; alt. DOB 18 Sep 1955; POB Guayabito, Pericos, Morocito, Sinaloa, Mexico; citizen Mexico; alt. citizen United States; nationality Mexico; C.U.R.P. CASB540918MSLZLL00 (Mexico); Electoral Registry No. CZSLBL54091825M200 (Mexico); R.F.C. CASB540918LVI (Mexico) (individual) [SDNTK]

CAZAREZ PEREZ, Efrain (a.k.a. CAZARES PEREZ, Efrain), c/o CAZPER IMPORTACIONES, S.A. DE C.V., Culiacan, Sinaloa, Mexico; Calle Torre de Londres No. 7028, Fraccionamiento Las Torres, Culiacan, Sinaloa, Mexico; DOB 16 May 1965; POB Campo Loaiza, Sinaloa, Mexico; citizen Mexico; nationality Mexico; Electoral Registry No. CAPE6505164F5 (Mexico) (individual) [SDNTK]

CAZAREZ PEREZ, Irma (a.k.a. CAZARES PEREZ, Irma), c/o CAZPER IMPORTACIONES, S.A. DE C.V., Culiacan, Sinaloa, Mexico; Calle Isla del Oeste No. 103, La Primavera, Culiacan, Sinaloa, Mexico; DOB 27 Sep 1956; POB Zapote de los Moya, Mocorito, Sinaloa, Mexico; citizen Mexico; nationality Mexico; C.U.R.P. CAPI560927MSLZRR07 (Mexico); alt. C.U.R.P. CAPI560927MSLZRR15 (Mexico); Electoral Registry No. CAPI560927RF4 (Mexico) (individual) [SDNTK]

CAZAREZ PEREZ, Maria Tiburcia (a.k.a. CAZARES PEREZ, Maria Tiburcia), c/o CAZPER IMPORTACIONES, S.A. DE C.V., Culiacan, Sinaloa, Mexico; Calle Isla del Oeste No. 103, La Primavera, Culiacan, Sinaloa, Mexico; DOB 14 Oct 1962; POB Campo Tribolet, Perteneciente a la sindicatura de Sataya, Navolato, Sinaloa; citizen Mexico; nationality Mexico; C.U.R.P. CAPT621014MSLZRB00 (Mexico); Electoral Registry No. CAPT6210144PA (Mexico) (individual) [SDNTK]

CAZAREZ SALAZAR, Victor Emilio (a.k.a. CAZARES GASTELLUM, Victor Emilio; a.k.a. CAZARES GASTELUM, Victor Emilio; a.k.a. CAZARES SALAZAR, Victor Emilio; a.k.a. CAZAREZ GASTELUM, Victor; a.k.a. ''EL LICENCIADO''; a.k.a. ''EL VIEJO''), Mexico; DOB 08 Aug 1961; POB Guasavito, Guasave, Sinaloa, Mexico; citizen Mexico; alt. citizen United States; nationality Mexico; C.U.R.P. CASV610808HSLZLC08 (Mexico) (individual) [SDNTK]

CAZPER IMPORTACIONES, S.A. DE C.V., Ave. Manuel Vallarta No. 2136, Col. Centro, Culiacan, Sinaloa, Mexico; Ave. Manuel Vallarta #2136–1, Col. Centro Sinaloa, Culiacan, Sinaloa, Mexico; Ave. Manuel Vallarta No. 2144, Col. Centro, Culiacan, Sinaloa, Mexico; Ave Manuel Vallarta 2136, Centro Culiacan Fray Servando Teresa de Mier E, Culiacan de Rosales, Culiacan 80129, Mexico; R.F.C. CIM040429UH4 (Mexico); Website www.cazper.com.mx (Mexico) [SDNTK]

CECEP EDITORES S.A., Carrera 22 No. 5A–21, Cali, Colombia; Calle 5A No. 22–13, Cali, Colombia; NIT # 805018858–1 (Colombia) [SDNT]

CECEP S.A. (f.k.a. CENTRO COLOMBIANO DE ESTUDIOS PROFESIONALES LTDA.), Calle 9B No. 29A–67, Cali, Colombia; Avenida 6 No. 28–102, Cali, Colombia; NIT # 890315495–4 (Colombia) [SDNT]

CECOEX, S.A., Panama City, Panama [CUBA]

CEDENO HERRERA, Luis Mario, c/o AGROPECUARIA LINDARAJA S.A., Cali, Colombia; c/o INVERSIONES AGROINDUSTRIALES DEL OCCIDENTE LTDA., Bogota, Colombia; c/o COMPANIA AGROPECUARIA DEL SUR LTDA., Bogota, Colombia; c/o INVERSIONES BRASILAR S.A., Bogota, Colombia; citizen Colombia; nationality Colombia; Cedula No. 16637213 (Colombia) (individual) [SDNT]

CELIS PEREZ, Alexander, c/o DROCARD S.A., Bogota, Colombia; DOB 16 Feb 1973; Cedula No. 79620931 (Colombia) (individual) [SDNT]

CELTIC (f.k.a. VIOLET ISLANDS) (vessel) [CUBA]

CEMENT INVESTMENT AND DEVELOPMENT COMPANY (a.k.a. CIDCO; a.k.a. CIDCO CEMENT HOLDING), No. 241, Mirdamad Street, Tehran, Iran [NPWMD]

CENGIC, Hasan; DOB 3 Aug 1957; POB Odzak, Bosnia-Herzegovina (individual) [BALKANS]

CENTRAFRICAN AIRLINES (a.k.a. CENTRAFRICAIN AIRLINES; a.k.a. CENTRAL AFRICAN AIR; a.k.a. CENTRAL AFRICAN AIR LINES; a.k.a. CENTRAL AFRICAN AIRWAYS), P.O. Box 2760, Bangui, Central African Republic; P.O. Box 2190, Ajman, United Arab Emirates; Kigali, Rwanda; Ras-al-Khaimah, United Arab Emirates; c/o Transavia Travel Agency, P.O. Box 3962, Sharjah, United Arab Emirates [LIBERIA]

CENTRAL AFRICA DEVELOPMENT FUND, 811 S. Central Expwy, Ste 210, Richardson, TX 75080; P.O. Box 850431, Richardson, TX 75085; US FEIN 75–2884986 [LIBERIA]

CENTRO CAMBIARIO KINO, S.A. DE C.V. (a.k.a. GAMAL-MULTISERVICIOS), Carretera Aeropuerto 1900, Local G–16, Tijuana, Baja California CP 22510, Mexico; Av. Independencia 1 Plaza Padre Kino, Local 11, Zona Rio, Tijuana, Baja California CP 22320, Mexico; R.F.C. CCK–010928–5C0 (Mexico) [SDNTK]

CENTRO COMERCIAL GUSS S.A., Carrera 105 No. 14–01, Cali, Colombia; NIT # 900105460–1 (Colombia) [SDNT]

CENTRO DE BELLEZA SHARY VERGARA, Carrera 54 No. 72–80 Local 25, Barranquilla, Colombia [SDNT]

CERKEZ, Mario; DOB 27 Mar 1959; POB Rijeka, Bosnia-Herzegovina; ICTY indictee (individual) [BALKANS]

CESIC, Ranko; DOB 5 Sep 1964; POB Drvar, Bosnia-Herzegovina; ICTY indictee in custody (individual) [BALKANS]

CESIC-ROJS, Ljubo; DOB 20 Feb 1958; POB Posulje, Bosnia-Herzegovina (individual) [BALKANS]

CET AVIATION ENTERPRISE (FZE), Equatorial Guinea; P.O. Box 932—C20, Ajman, United Arab Emirates [LIBERIA]

CETNIK RAVNAGORSKI POKRET (a.k.a. CRP) [BALKANS]

CHA, Ta Fa (a.k.a. CHATURONG, Taiyai; a.k.a. CHATURONG, Thaiyai; a.k.a. LU, Chin Shun; a.k.a. ''CHA TA FA''; a.k.a. ''LU TA FA''; a.k.a. ''TA FA''), Burma; 29, Wawi Sub-district, Mae Suai District, Chiang Rai, Thailand; DOB 05 Mar 1958; National ID No. 3501000250521 (Thailand) (individual) [SDNTK]

CHAIJAMROONPHAN, Warin (a.k.a. CHAICHAMRUNPHAN, Warin; a.k.a. CHAIWORASILP, Warin; a.k.a. CHAIWORASIN, Warin; a.k.a. PICHAYOS, Warin; a.k.a. VORAWATVICHAI, Hataiwan; a.k.a. VORAWATVICHAI, Hathaiwan; a.k.a. VORAWATVICHAI, Suravee; a.k.a. VORAWATVICHAI, Surawee; a.k.a. VORAWATVICHAI, Varin; a.k.a. WORAWATVICHAI, Hataiwan; a.k.a. WORAWATVICHAI, Hathaiwan; a.k.a. WORAWATVICHAI, Suravee; a.k.a. WORAWATVICHAI, Surawee; a.k.a. WORAWATWICHAI, Hataiwan; a.k.a. WORAWATWICHAI, Hathaiwan; a.k.a. WORAWATWICHAI, Surawee; a.k.a. WORAWATWICHAI, Warin), c/o PLOYDAENG JEWELRY SHOP, Bangkok, Thailand; c/o RATTANA VICHAI COMPANY LTD., Bangkok, Thailand; c/o SIAM NICE COMPANY LTD., Bangkok, Thailand; c/o HATKAEW COMPANY LTD., Bangkok, Thailand; c/o RUNGRIN COMPANY LTD., Bangkok, Thailand; c/o PROGRESS SURAWEE COMPANY LTD., Bangkok, Thailand; c/o NICE FANTASY GARMENT COMPANY LTD., Bangkok, Thailand; c/o SCORE COMMERCIAL COMPANY LTD., Bangkok, Thailand; DOB 9 Jan 1956; National ID No. 3101701873838 (Thailand); Passport N302083 (Thailand) (individual) [SDNTK]

CHAIWORASIN, Wilai (a.k.a. CHAIVORASILP, Vilai; a.k.a. CHAIWORASIN, Vilai), c/o HATKAEW COMPANY LTD., Bangkok, Thailand; c/o SCORE COMMERCIAL COMPANY LTD., Bangkok, Thailand; c/o MAESAI K.D.P. COMPANY LTD., Chiang Rai, Thailand; c/o NICE FANTASY GARMENT COMPANY LTD., Bangkok, Thailand; c/o SIAM NICE COMPANY LTD., Bangkok, Thailand; c/o RUNGRIN COMPANY LTD., Bangkok, Thailand; c/o V.R. FRUIT COMPANY, Chiang Mai, Thailand; DOB 1934; National ID No. 3102002529284 (Thailand) (individual) [SDNTK]

CHAIWORASIN, Wimonsi (a.k.a. CHAIVORASILP, Vimolsri; a.k.a. CHAIVORASILP, Wimolsri; a.k.a. CHAIWORASIN, Vimonsi; a.k.a. CHAIWORASIN, Vimonsri; a.k.a. CHAIWORASIN, Wimonsri), c/o NICE FANTASY GARMENT COMPANY LTD., Bangkok, Thailand; c/o RUNGRIN COMPANY LTD., Bangkok, Thailand; c/o SIAM NICE COMPANY LTD., Bangkok, Thailand; c/o HATKAEW COMPANY LTD., Bangkok, Thailand; c/o V.R. FRUIT COMPANY, Chiang Mai, Thailand; c/o MAESAI K.D.P. COMPANY LTD., Chiang Rai, Thailand; c/o A-TEAM CHEMICALS COMPANY LTD., Bangkok, Thailand; c/o PLUS TECH AUTO SUPPLY COMPANY LTD., Bangkok, Thailand; c/o RATTANA VICHAI COMPANY LTD., Bangkok, Thailand; DOB 1953; National ID No. 3570900519762 (Thailand); Passport B272327 (Thailand) (individual) [SDNTK]

CHAMARTIN S.A., Calle 10 No. 4–47, piso 18, Cali, Colombia; NIT # 805024137–4 (Colombia) [SDNT]

CHAMET IMPORT, S.A., Panama [CUBA]

CHANG, Chi Fu (a.k.a. CHAN, Changtrakul; a.k.a. CHANG, Shi-Fu; a.k.a. CHANG, Xifu; a.k.a. CHANGTRAKUL, Chan; a.k.a. KHUN SA); DOB 17 Feb 1933; alt. DOB 12 Feb 1932; alt. DOB 7 Jan 1932; POB Burma (individual) [SDNTK]

CHANG, Chin Sung (a.k.a. KLUAI YUAI, Choi Luang; a.k.a. ''AH SUNG''), Shan State, Burma; 57/2, Mu 4, Tambon Pa Pae, Amphur Mae Taeng, Chiang Mai, Thailand; DOB 20 Dec 1959; National ID No. 3550700628151 (Thailand) (individual) [SDNTK]

CHANG, Ping Yun (a.k.a. KHUN, Saeng); DOB 7 Jan 1940; POB Burma (individual) [SDNTK]

CHAO, Lazaro R., 20 Ironmonger Lane, London EC2V 8EY, United Kingdom; Executive Director, Havana International Bank (individual) [CUBA]

CHAPARRO MARTINEZ, Elizabeth, c/o ADMINISTRADORA DE SERVICIOS VARIOS CALIMA S.A., Cali, Colombia; DOB 5 May 1968; Cedula No. 31973372 (Colombia); Passport 31973372 (Colombia) (individual) [SDNT]

CHAPFIKA, Abina; DOB 23 Aug 1961; Passport ZE190297 (Zimbabwe); Spouse of David Chapfika (individual) [ZIMBABWE]

CHAPFIKA, David; DOB 7 Apr 1957; Passport ZL037165 (Zimbabwe); Deputy Minister of Finance (individual) [ZIMBABWE]

CHARAABI, Tarek (a.k.a. AL-CHARAABI, Tarek Ben Al-Bechir Ben Amara; a.k.a. SHARAABI, Tarek), Viale Bligny n.42, Milano, Italy; DOB 31 Mar 1970; POB Tunisia; nationality Tunisia; Italian Fiscal Code CHRTRK70C31Z352U; Passport L 579603 issued 19 Nov 1997 expires 18 Nov 2002 (individual) [SDGT]

CHARAMBA, George; DOB 4 Apr 1963; Passport AD001255 (Zimbabwe); Permanent Secretary, Zimbabwean Ministry of Information and Publicity (individual) [ZIMBABWE]

CHARAMBA, Rudo Grace; DOB 20 Jun 1964; Spouse of George Charamba (individual) [ZIMBABWE]

CHARIAPAPORN, Hiran (a.k.a. CHARI-APAPORN, Hiran; a.k.a. CHARI-APHAPHON, Hiran; a.k.a. JAREE-ARPAPORN, Hiran; a.k.a. JAREE-ARPAPORN, Hirun; a.k.a. WU, Nan Hsiung), c/o A-TEAM CHEMICALS COMPANY LTD., Bangkok, Thailand; c/oPLUS TECH AUTO SUPPLY COMPANY LTD., Bangkok, Thailand; DOB 3 Jan 1950; National ID No. 310062394060 (Thailand) (individual) [SDNTK]

CHARRIS MORALES, Geny Maria (a.k.a. CHARRYS MORALES, Geny Maria), c/o COOPIFARMA, Bucaramanga, Colombia; c/o REPRESENTACIONES Y DISTRIBUCIONES HUERTAS Y ASOCIADOS S.A., Bogota, Colombia; c/o COOPERATIVA MULTIACTIVA DE COLOMBIA FOMENTAMOS, Bogota, Colombia; DOB 24 Feb 1961; Cedula No. 51606354 (Colombia); Passport 51606354 (Colombia) (individual) [SDNT]

CHARUMBIRA, Fortune Zefanaya; DOB 10 Jun 1962; Member of Parliament & Central Committee Member (individual) [ZIMBABWE]

CHAVARRO, Hector Fabio, c/o AGROPECUARIA BETANIA LTDA., Cali, Colombia; c/o VALLADARES LTDA., Cali, Colombia; c/o INVERSIONES VILLA PAZ S.A., Cali, Colombia; DOB 28 Sep 1959; Cedula No. 16263212 (Colombia) (individual) [SDNT]

CHEKKOURI, Yassine; DOB 6 Oct 1966; POB Safi, Morocco (individual) [SDGT]

CHICHAKLI & ASSOCIATES PLLC (a.k.a. CHICHAKLI HICKMANRIGGS & RIGGS; a.k.a. CHICHAKLI HICKMAN-RIGGS & RIGGS, PLLC), 811 S. Central Expwy, Ste 210, Richardson, TX 75080 [LIBERIA]

CHICHAKLI, Richard Ammar (a.k.a. CHICHAKLI, Ammar M.), 225 Syracuse Place, Richardson, TX 75081; 811 S. Central Expwy, Ste 210, Richardson, TX 75080; DOB 29 Mar 1959; POB Syria; citizen United States; SSN 405–41–5342; alt. SSN 467–79–1065 (individual) [LIBERIA]

CHIGUDU, Tinaye Elisha Nzirasha; DOB 13 Aug 1942; Passport AD000013 (Zimbabwe); Manicaland Provincial Governor (individual) [ZIMBABWE]

CHIGWEDERE, Aeneas Soko; DOB 25 Nov 1939; Minister of Education, Sports and Culture (individual) [ZIMBABWE]

CHIHOTA, Phineas; DOB 23 Nov 1950; Deputy Minister of Industry and International Trade (individual) [ZIMBABWE]

CHIHUAHUA FOODS S.A. DE C.V., Cuauhtemoc, Chihuahua, Mexico [SDNTK]

CHIHURI, Augustine; DOB 10 Mar 1953; Passport AD000206 (Zimbabwe); Police Commissioner (individual) [ZIMBABWE]

CHIKOWORE, Enos; DOB 17 July 1942; Former Central Committee Member; Deceased (individual) [ZIMBABWE]

CHIMUTENGWENDE, Chenhamo Chakezha Chen; DOB 28 Aug 1943; Passport ZD001423 (Zimbabwe); alt. Passport AN288614 (Zimbabwe); Minister of State for Public and Interactive Affairs (individual) [ZIMBABWE]
CHINA NATIONAL PRECISION MACHINERY IMPORT/EXPORT CORPORATION (a.k.a. CHINA NATIONAL PRECISION MACHINERY I/E CORP.; a.k.a. CHINA PRECISION MACHINERY IMPORT/EXPORT CORPORATION; a.k.a. CPMIEC; a.k.a. ZHONGGUO JINGMI JIXIE JINCHUKOU ZONGGONGSI), No. 30 Haidian Nanlu, Beijing, China; and all other locations worldwide [NPWMD]
CHINAMASA, Gamuchirai, 2 Honeybear Lane, Borrowdale, Zimbabwe; DOB 11 Nov 1991; Passport AN634603 (Zimbabwe); Child of Patrick Chinamasa (individual) [ZIMBABWE]
CHINAMASA, Monica, 6B Honeybear Lane, Borrowdale, Zimbabwe; DOB circa 1950; Spouse of Patrick Chinamasa (individual) [ZIMBABWE]
CHINAMASA, Patrick, 6B Honeybear Lane, Borrowdale, Zimbabwe; DOB 25 Jan 1947; Minister of Justice, Legal and Parliamentary Affairs (individual) [ZIMBABWE]
CHINDORI-CHININGA, Edward; DOB 14 Mar 1955; Passport AN388694 (Zimbabwe); Member of Parliament for Guruve South (individual) [ZIMBABWE]
CHITEPO, Victoria; DOB 27 Mar 1928; Politburo (individual) [ZIMBABWE]
CHIWENGA, Constantine Gureya; DOB 25 Aug 1956; Passport AD000263 (Zimbabwe); Lt. General, Commander of Zimbabwe Defense Forces (individual) [ZIMBABWE]
CHIWENGA, Jocelyn Mauchaza; DOB 19 May 1955; Passport AN061550 (Zimbabwe); Spouse of Constantine Chiwenga (individual) [ZIMBABWE]
CHIWESHE, George; DOB 4 Jun 1953; Chairman of Zimbabwe Electoral Commission (individual) [ZIMBABWE]
CHIWEWE, Willard, Private Bag 7713, Causeway, Harare, Zimbabwe; DOB 19 Mar 1949; Masvingo Provincial Governor (individual) [ZIMBABWE]
CHOMBO, Ever, No. 38, 39th Crescent, Warrenton Park, Harare, Zimbabwe; DOB 20 Sep 1956; Passport AN845280 (Zimbabwe); Spouse of Ignatius Chombo (individual) [ZIMBABWE]
CHOMBO, Ignatius Morgan; DOB 1 Aug 1952; Passport AD000500 (Zimbabwe); Minister of Local Government, Public Works and National Housing (individual) [ZIMBABWE]
CHOMBO, Marian, 45 Basset Crescent, Alexandra Park, Zimbabwe; DOB 11 Aug 1960; Passport AD000896 (Zimbabwe); Spouse of Ignatius Chombo (individual) [ZIMBABWE]
CHOU, Hsien Cheng (a.k.a. CHEW, Kheng Siang), c/o TET KHAM (S) PTE. LTD., Singapore; c/o VEST SPECTRUM (S) PTE. LTD., Singapore, Singapore; 9 Haig Avenue, Singapore 438864, Singapore; National ID No. S1199192J (Singapore) (individual) [SDNTK]
CHOW RIOS, Harding Elvis; DOB 2 Apr 1962; POB San Andres, Colombia; Cedula No. 15243752 (Colombia) (individual) [SDNT]
CIA COMERCIALIZADORA DE BIENES RAICES LTDA. (a.k.a. COBIENES LTDA.; f.k.a. MEJIA MUNERA HERMANOS LTDA.), Cali, Colombia; NIT # 8000689284 (Colombia) [SDNT]
CIA. ANDINA DE EMPAQUES LTDA. (a.k.a. COEMPAQUES LTDA.), Carrera 4 No. 11–45 Ofc. 503, Cali, Colombia; Carrera 17 G No. 25–72, Cali, Colombia; NIT # 800018562–9 (Colombia) [SDNT]
CIA. CONSTRUCTORA Y COMERCIALIZADORA DEL SUR LTDA. (a.k.a. COSUR LTDA.; a.k.a. HOTEL PALACE), Avenida El Dorado Entrada 2 Int. 6, Bogota, Colombia; NIT # 890329758–7 (Colombia) [SDNT]
CIA. MINERA DAPA S.A., Carrera 16 No. 93–38 Ofc. 104, Bogota, Colombia; NIT # 800181373–1 (Colombia) [SDNT]
CICLON (vessel) [CUBA]
CIDCA (a.k.a. CENTRO INVESTIGACION DOCENCIA Y CONSULTORIA ADMINISTRATIVA), Calle 61 No. 11–09 Chapinero, Bogota, Colombia; Carrera 5 No. 23–16, Bogota, Colombia; NIT # 860404579–7 (Colombia) [SDNT]
CIFUENTES GALINDO, Luis Eduardo (a.k.a. ''EL AGUILA''); DOB 16 Mar 1960; Cedula No. 3254362 (Colombia) (individual) [SDNTK]
CIMECO, SRL, Milan, Italy [CUBA]
CIMEX, Emerson No. 148 Piso 7, 11570 Mexico, D.F., Mexico [CUBA]
CIMEX IBERICA, Spain [CUBA]
CIMEX, S.A., Panama [CUBA]
CIPE INVESTMENTS CORPORATION, Panama City, Panama; C.R. No. 197910/22096/0051 (Panama); RUC # 2209651197910 (Panama) [SDNT]
CIRE, Kursad Zafer (a.k.a. CIRE, Kursat Zafer); DOB 30 Aug 1967; POB Germany; nationality Turkey; Passport 778456 (Turkey) issued 14 May 1997 expires 13 May 2007 (individual) [NPWMD]
CISCO SHIPPING COMPANY CO. LTD. (a.k.a. IRISL KOREA CO., LTD.; a.k.a. SEOUL INTERNATIONAL SHIPPING COMPANY; a.k.a. SISCO), 18th Floor, Sebang Building, 708–8, Yeoksam-dong, Kangnam-Gu, Seoul, Korea, South; 4th Floor, Sebang Building 68–46, Jwacheon-Dong, Dong-Gu, Busan, Korea, South [NPWMD]
CISSE, M. Moussa (a.k.a. KAMARA, Mamadee); DOB 24 Dec 1946; alt. DOB 26 Jan 1944; Passport D–001548–99 (Liberia); alt. Passport 0058070 (Liberia); Former Chief of Presidential Protocol of Liberia; Chairman, Mohammed Group of Companies; Diplomatic (individual) [LIBERIA]
CITICAR LTDA., Calle 15 No. 10–52, La Union, Valle, Colombia; NIT # 800026660–6 (Colombia) [SDNT]
CLAROS, Dario, c/o COOPCREAR, Bogota, Colombia; c/o SOLUCIONES COOPERATIVAS, Bogota, Colombia; c/o COOPERATIVA MULTIACTIVA DE COLOMBIA FOMENTAMOS, Bogota, Colombia; c/o LITOPHARMA, Barranquilla, Colombia; c/o CAJA SOLIDARIA, Bogota, Colombia; c/o COOPERATIVA DE TRABAJO ASOCIADO ACTIVAR, Bogota, Colombia; Cedula No. 83180350 (Colombia) (individual) [SDNT]
CLAUDIA PILAR RODRIGUEZ Y CIA. S.C.S., Calle 17A No. 28A–43, Bogota, Colombia; NIT # 830007201–7 (Colombia) [SDNT]
CLAVIJO GARCIA, Hector Augusto, c/o GANADERIAS DEL VALLE S.A., Cali, Colombia; DOB 15 Dec 1958; Cedula No. 16613930 (Colombia) (individual) [SDNT]
CLINICA ESPECIALIZADA DEL VALLE S.A. (a.k.a. C.E.V. S.A.), Calle 10 No. 44A–26, Cali, Colombia; Apartado Aereo 32412, Cali, Colombia; Carrera 46 No. 9C–85, Cali, Colombia; Carrera 40 No. 6–50, Of. 1501, Cali, Colombia; NIT # 800134099–6 (Colombia) [SDNT]
CLINICA SAN FRANCISCO S.A. (f.k.a. CLINICA DE OCCIDENTE TULUA S.A.; f.k.a. CLINICA NUESTRA SENORA DE FATIMA S.A.), Calle 26 No. 34–60, Tulua, Valle, Colombia; NIT # 800191916–1 (Colombia) [SDNT]
COBALT REFINERY CO. INC., Fort Saskatchewan, AB, Canada [CUBA]
COCINA DE TIJUANA, S. DE R.L. DE C.V., Boulevard Sanchez Taboada No. 10451, Colonia Urbano Rio Tijuana, Tijuana, Baja California, Mexico; R.F.C. CTI050414A55 (Mexico) [SDNTK]
CODISA (a.k.a. COOPERATIVA MULTIACTIVA DE DISTRIBUCION Y SERVICIOS ADMINISTRATIVOS), Calle 17A No. 28A–43, Bogota, Colombia; Calle 23 No. 19–75, Bogota, Colombia; NIT # 860524476–1 (Colombia) [SDNT]
COINTERCOS S.A. (f.k.a. BLAIMAR; a.k.a. CIA. INTERAMERICANA DE COSMETICOS S.A.; f.k.a. LABORATORIOS BLAIMAR DE COLOMBIA S.A.), Apartado Aereo 33248, Bogota, Colombia; Calle 12B No. 27–39, Bogota, Colombia; NIT # 860511578–8 (Colombia) [SDNT]
COLCHONES SUNMOONS LTDA, Carrera 50 No. 37–45 Sur, Bogota, Colombia; NIT # 830073142–1 (Colombia) [SDNTK]
COLD COMFORT FARM TRUST CO-OPERATIVE, 7 Cowie Road, Tynwald, Harare, Zimbabwe; P.O. Box 6996, Harare, Zimbabwe [ZIMBABWE]
COLFARMA PERU S.A., Av. Los Plateros 145 piso 2, Urb. El Artesano Ate, Lima, Peru; RUC # 2033645155 (Peru) [SDNT]
COLIMEX LTDA., Calle 29 Norte No. 6N–43, Cali, Colombia; NIT # 800256902–1 (Colombia) [SDNT]
COLL PRADO, Gabriel, Panama (individual) [CUBA]
COLOMBIANA DE CERDOS LTDA. (a.k.a. COLCERDOS LTDA.), Km. 3 Via Marsella Parque Industrial, Pereira, Colombia; Apartado Aereo 3786, Pereira, Colombia; NIT # 800018928–0 (Colombia) [SDNT]
COLOMBO ANDINA COMERCIAL COALSA LTDA., Carrera 14 No. 95–47, Ofc.201, Bogota, Colombia; NIT # 800084516–0 (Colombia) [SDNT]
COLON BETANCOURT, Eduardo, Panama (individual) [CUBA]
COLONY TRADING, S.A., Panama [CUBA]
COLOR 89.5 FM STEREO, Calle 15N No. 6N–34 piso 15, Edificio Alcazar, Cali, Colombia; Calle 19N No. 2N–29, Cali, Colombia [SDNT]
COMEDICAMENTOS S.A., Transversal 29 No. 39–92, Bogota, Colombia; NIT # 830030803–7 (Colombia) [SDNT]
COMERCIAL CIMEX, S.A., Panama [CUBA]

COMERCIAL DE NEGOCIOS CLARIDAD Y CIA., Avenida Caracas No. 59–77 of. 201A, 401B y 405B, Bogota, Colombia; NIT # 800080719–0 (Colombia) [SDNT]

COMERCIAL DE RODAJES Y MAQUINARIA, S.A. (a.k.a. CRYMSA), Jose Lazaro Galdeano 6–6, 28016 Madrid, Spain [CUBA]

COMERCIAL DOMELY, S.A. DE C.V, Ignacio Ramirez No. 603, Col. Jorge Almada, Culiacan, Sinaloa 80200, Mexico; R.F.C. CDO010522917 (Mexico) [SDNTK]

COMERCIAL IBEROAMERICANA, S.A. (a.k.a. COIBA), Spain [CUBA]

COMERCIAL JOANA, S.A. DE C.V., General Eulogio Parra No. 61, Interior Z, Col. El Retiro, Guadalajara, Jalisco, Mexico; General Eulogio Parra No. 1750-C, Col. El Retiro, Guadalajara, Jalisco, Mexico; Calle General Eulogio Parra Numero 61-Z, Col. El Retiro, Guadalajara, Jalisco 44280, Mexico; Parras No. 1750, Col. Educacion Alamos, Guadalajara, Mexico; R.F.C. CJO010202HQ4 (Mexico); alt. R.F.C. CJO010202HQH (Mexico) [SDNTK]

COMERCIAL MURALLA, S.A. (a.k.a. MURALLA, S.A.), Panama City, Panama [CUBA]

COMERCIALIZACION DE PRODUCTOS VARIOS (a.k.a. COPROVA; a.k.a. COPROVA SARL), Paris, France [CUBA]

COMERCIALIZACION Y FINANCIACION DE AUTOMOTORES S.A. (a.k.a. COMFIAUTOS S.A.), Carrera 4 No. 11–33 of. 303, Cali, Colombia; Avenida 2N No. 7N-55 of. 609, Cali, Colombia; NIT # 800086115–1 (Colombia) [SDNT]

COMERCIALIZADORA AMIA, S.A. DE C.V., Avenida Juan Sarabia, Calle 8106, Zona Central, Tijuana, Baja California CP 22000, Mexico; R.F.C. CAM-940526–8H9 (Mexico) [SDNTK]

COMERCIALIZADORA ANDINA BRASILERA S.A. (a.k.a. CABRASA), Carrera 30 No. 90–82, Bogota, Colombia; NIT # 830003298–2 (Colombia) [SDNT]

COMERCIALIZADORA BRIMAR'S, S.A. DE C.V., Calle Riva Palacio Sur No. 675, Col. Jorge Almada, Culiacan, Sinaloa, Mexico; R.F.C. CBS9710303N4 (Mexico) [SDNTK]

COMERCIALIZADORA CGQ LTDA. (a.k.a. CENTROPARTES CALI), Carrera 18 No. 9–24, Cali, Colombia; NIT # 805029062–3 (Colombia) [SDNT]

COMERCIALIZADORA COLOMBIAN MONEY EXCHANGE LTDA., Avenida 40 No. 26C–10 Local 304, Villavicencio, Colombia; Carrera 15 No. 90–36 Local 101, Bogota, Colombia; Calle 82 No. 11–75 Local 164, Bogota, Colombia; NIT # 830090469–6 (Colombia) [SDNTK]

COMERCIALIZADORA DE BIENES Y SERVICIOS ADMINISTRATIVOS Y FINANCIEROS S.A. (f.k.a. RENTAS Y ADMINISTRACIONES S.A.), Calle 6 No. 39–25 Local 206, Cali, Colombia; NIT # 800200471–6 (Colombia) [SDNT]

COMERCIALIZADORA DE CAFE DEL OCCIDENTE CODECAFE LTDA. (a.k.a. CODECAFE), Carrera 8 No. 23–09, Ofc. 903, Pereira, Risaralda, Colombia; NIT # 816004106–0 (Colombia) [SDNT]

COMERCIALIZADORA DE CARNES DEL PACIFICO LTDA., Calle 25 No. 8–54, Cali, Colombia [SDNT]

COMERCIALIZADORA DE CARNES LTDA. (a.k.a. COMECARNES LTDA.), Km. 3 Via Marsella, Pereira, Colombia; NIT # 800076369–0 (Colombia) [SDNT]

COMERCIALIZADORA DE LINEAS PHARMACEUTICAS S.A. (a.k.a. COLPHAR S.A.), Calle 39 Bis A No. 27–16, Bogota, Colombia; Calle 94A No. 13–91 of. 402, Bogota, Colombia; NIT # 830074552–2 (Colombia) [SDNT]

COMERCIALIZADORA DE PRODUCTOS FARMACEUTICOS LTDA., Manzana 48 Casa 12 Etapa 2 Simon Bolivar, Ibague, Colombia; NIT # 809010102–0 (Colombia) [SDNT]

COMERCIALIZADORA DIGLO LTDA., Calle 23 No. 19–75, Bogota, Colombia; NIT # 800789578–3 (Colombia) [SDNT]

COMERCIALIZADORA E IMPORTADORA GARDES, S.A. DE C.V., Carrillo Puerto, Calle 2025 21-A, Zona Central, Tijuana, Baja California, Mexico; Huixquilucan, Distrito Federal, Mexico; R.F.C. CIG–920206-F64 (Mexico) [SDNTK]

COMERCIALIZADORA EXPERTA Y CIA. S. EN C., Avenida Caracas No. 59–77 of. 201A, 401B, 405B y 407B, Bogota, Colombia; NIT # 800075687–3 (Colombia) [SDNT]

COMERCIALIZADORA INTERTEL S.A., Calle 18 No. 106–98 of. 207, 302, 303, Cali, Colombia; Carrera 42 No. 9D–49, Cali, Colombia; Calle 19 No. 9–50 of. 1501, Cali, Colombia; NIT # 805015152–7 (Colombia) [SDNT]

COMERCIALIZADORA JALSIN, S.A. DE C.V. (a.k.a. CHIKA'S; a.k.a. CHIKA'S ACCESORIOS Y COSMETICOS; a.k.a. COMERCIALIZADORA JALZIN, S.A. DE C.V.), Avenida Juarez 496, Col. Centro, Guadalajara, Jalisco, Mexico; Calle Juan Manuel 308, Col. Colonia Guadalajara Centro, Guadalajara, Jalisco, Mexico; Calle Alvaro Obregon 614, Col. Barrio San Juan De Dios, Guadalajara, Jalisco, Mexico; Calle Pedro Loza 174, Col. Colonia Guadalajara Centro, Guadalajara, Jalisco, Mexico; Parras No. 1750, Col. Educacion Alamos, Guadalajara, Jalisco 44280, Mexico; Calle Vasco de Quiroga 32, Col. Colonia Morelia Centro, Morelia, Michoacan, Mexico; Calle Javier Mina 26, Col. Colonia La Perla, Guadalajara, Jalisco, Mexico; Calle Pedro Loza 184, Col. Colonia Guadalajara Centro, Guadalajara, Jalisco, Mexico; Andador Pedro Loza 174, Col. Barrio Jesus, Guadalajara, Jalisco, Mexico; Calle Alvaro Obregon 614, Col. Colonia La Perla, Guadalajara, Jalisco, Mexico; Avenida Javier Mina 28, Col. Barrio San Juan De Dios, Guadalajara, Jalisco, Mexico; Avenida Juarez 498, Col. Colonia Guadalajara Centro, Guadalajara, Jalisco, Mexico; Privada Periferico Sur 1835, Col. Pueblo Santa Maria Tequepexpan, Tlaquepaque, Jalisco, Mexico; Cll 614 s/n, Col.San Jan de Dios, Guadalajara, Jalisco 44360, Mexico; Calle Reforma, Esquina Comonfort Esquina Loc 11, Col. Colonia Leon de los Aldamas Centro, Leon, Guanajuato 37000, Mexico; Ave. Juarez No. 496, Col. Centro, Guadalajara, Jalisco 44100, Mexico; Calle Reforma 217 A, Col. Colonia Leon de los Aldamas Centro, Leon, Guanajuato 37000, Mexico; Vasco de Quiroga No. 32, Zona Centro, Morelia, Michoacan, Mexico; Cll 271 s/n, Col. Centro, Guadalajara, Jalisco 44280, Mexico; R.F.C. CJA980901J13 (Mexico) [SDNTK]

COMERCIALIZADORA MOR GAVIRIA S.A. (a.k.a. ALFOMBRAS DURATEX DE COLOMBIA; a.k.a. ''DURATEX ECUADOR''), Avenida Pedro Vicente Maldonado N229 y Rivas, Edificio Centro Comercial El Recreo, Local 24F, Pichincha, Quito, Ecuador; RUC # 1791813359001 (Ecuador) [SDNT]

COMERCIALIZADORA MORDUR S.A., Avenida Pedro Vicente Maldonado 14–205, Edificio Centro Comercial El Recreo, Local 22F, Pichincha, Quito, Ecuador; RUC # 1791315820001 (Ecuador) [SDNT]

COMERCIALIZADORA OROBANCA (A.K.A. SOCIR S.A.) (a.k.a. SOUCIR, S.A.), Calle 36A No. 3GN–07 of. 302, Edificio El Parque, Cali, Colombia; Calle 22N No. 5A–75 of. 702, Edificio Via Veneto, Cali, Colombia [SDNT]

COMERCIALIZADORA PELISSIER OSPINA LTDA., Carrera 58B No. 63B–96 bq. 21 int. 15 apto. 201, Bogota, Colombia; NIT # 830009052–5 (Colombia) [SDNT]

COMERCIALIZADORA TOQUIN, S.A. DE C.V. (a.k.a. CHIKA'S COSMETICS AND ACCESSORIES), Calzada Gonzalez Gallo, numero 3064, Col. Lomas de San Pedro, Guadalajara, Jalisco 44897, Mexico; Calle Paseo del Hospisio 22 1038, Col. Colonia La Perla, Guadalajara, Jalisco, Mexico; Poniente 140 #639, Col. Industrial Vallejo, Mexico, Distrito Federal, Mexico; Calle Parras, Numero 1750 Int. C, Col. Alamo Oriente, Tlaquepaque, Jalisco, Mexico; R.F.C. CTO010731CH9 (Mexico) [SDNTK]

COMITE' DE BIENFAISANCE ET DE SECOURS AUX PALESTINIENS (a.k.a. AL AQSA ASSISTANCE CHARITABLE COUNCIL; a.k.a. AL-LAJNA AL-KHAYRIYYA LIL MUNASARA AL-AQSA; a.k.a. BENEVOLENCE COMMITTEE FOR SOLIDARITY WITH PALESTINE; a.k.a. BENEVOLENT COMMITTEE FOR SUPPORT OF PALESTINE; a.k.a. CBSP; a.k.a. CHARITABLE COMMITTEE FOR PALESTINE; a.k.a. CHARITABLE COMMITTEE FOR SOLIDARITY WITH PALESTINE; a.k.a. CHARITABLE COMMITTEE FOR SUPPORTING PALESTINE; a.k.a. CHARITABLE ORGANIZATION IN SUPPORT OF PALESTINE; f.k.a. COMITE' DE BIENFAISANCE POUR LA SOLIDARITE' AVEC LA PALESTINE; a.k.a. COMMITTEE FOR AID AND SOLIDARITY WITH PALESTINE; a.k.a. COMMITTEE FOR ASSISTANCE AND SOLIDARITY WITH PALESTINE; a.k.a. COMMITTEE FOR CHARITY AND SOLIDARITY WITH PALESTINE; a.k.a. COMPANIE BENIFICENT DE SOLIDARITE AVEC PALESTINE; a.k.a. COUNCIL OF CHARITY AND SOLIDARITY; a.k.a. DE BIENFAISANCE ET DE COMMITE LE SOLIDARITE AVEC LA PALESTINE; a.k.a. RELIEF COMMITTEE FOR SOLIDARITY WITH PALESTINE), 37 Rue de la Chapelle, 75018 Paris, France; 10 Rue Notre Dame, 69006 Lyon, France; 68 Rue Jules Guesde, 59000 Lille, France [SDGT]

COMMUNIST PARTY OF NEPAL (MAOIST) (a.k.a. CPN (M); a.k.a. THE PEOPLE'S LIBERATION ARMY OF NEPAL; a.k.a. UNITED REVOLUTIONARY PEOPLE'S COUNCIL) [SDGT]

COMOIL (PVT) LTD, Block D, Emerald Hill Office P, Emerald Park, Harare, Zimbabwe;

2nd Floor, Travel Plaza, 29 Mazoe St., Box CY2234, Causeway, Harare, Zimbabwe [ZIMBABWE]
COMPAGNIE AERIENNE DES GRANDS LACS (a.k.a. CAGL), Gisenyi, Rwanda; Av. President Mobutu, Goma, Congo, Democratic Republic of the [DRCONGO]
COMPANIA ADMINISTRADORA DE VIVIENDA S.A. (f.k.a. INVERSIONES GEMINIS S.A.), Carrera 40 No. 6–24 of. 402B, Cali, Colombia; Carrera 41 No. 6–15/35, Cali, Colombia; NIT # 800032419–1 (Colombia) [SDNT]
COMPANIA AGROINVERSORA HENAGRO LTDA., Carrera 1 No. 13–08, Cartago, Colombia; Km. 5 Via Aeropuerto, Cartago, Colombia; Hacienda Coque, Cartago, Colombia; NIT # 800084326–8 (Colombia) [SDNT]
COMPANIA AGROPECUARIA DEL SUR LTDA. (a.k.a. COAGROSUR LTDA.; f.k.a. MARIA NURY CAICEDO E HIJAS Y CIA S.C.S.), Calle 114A No. 11A–40, Apt. 302, Bogota, Colombia; NIT # 800107990–1 (Colombia) [SDNT]
COMPANIA DE FOMENTO MERCANTIL S.A., Avenida 7 Norte No. 23N–81, Cali, Colombia; NIT # 800124589–0 (Colombia) [SDNT]
COMPANIA DE IMPORTACION Y EXPORTACION IBERIA (a.k.a. CIMEX), Spain [CUBA]
COMPANIA FENIX INTERNACIONAL, S.A., Caracas, Venezuela [CUBA]
COMPANIA MINERA DEL RIO CIANURY S.A. DE C.V., Calle Rio Piaxtla No. exterior 45, Col. Guadalupe, Culiacan, Sinaloa 80220, Mexico; R.F.C. MRC900823R6A (Mexico) [SDNTK]
COMPANIA PESQUERA INTERNACIONAL, S.A., Panama [CUBA]
COMPLEJO TURISTICO OASIS, S.A. DE C.V. (a.k.a. OASIS BEACH RESORT & CONVENTION CENTER), Km 25 Carr. Tijuana-Ensenada, Colonia Leyes de Reforma, CP 22710, Playas Rosarito, Rosarito, Baja California, Mexico [SDNTK]
COMTECO LTDA. (a.k.a. COMUNICACIONES TECNICAS DE COLOMBIA LIMITADA), Calle 12N No. 9N–58, Cali, Colombia; Calle 44 Norte No. 2BN–08, Cali, Colombia; NIT # 800113514–1 (Colombia) [SDNT]
COMUDROGAS LTDA. (a.k.a. COOPERATIVA MULTIACTIVA DE DROGUISTAS LTDA.; a.k.a. COOPERATIVA MULTISERVICIOS DE DROGUISTAS LTDA.), Carrera 49B No. 75–63 Local 2, Barranquilla, Colombia; Calle 8 No. 31–03, Cali, Colombia; Calle 28 No. 22–25/27/39, Bucaramanga, Colombia; NIT # 804001143–6 (Colombia) [SDNT]
COMUNICACION VISUAL LTDA. (a.k.a. COMVIS LTDA.), Calle 11 No. 19–44, Cali, Colombia [SDNT]
COMUNICACIONES ABIERTAS CAMARY LTDA., Calle 13 No. 80–60 Loc. 224, Cali, Colombia; NIT # 805028107–1 (Colombia) [SDNT]
COMUNICACIONES UNIDAS DE COLOMBIA LTDA (f.k.a. RADIO COMUNICACIONES SUR DEL GUAVIARE LTDA), Calle 38 No. 33–72 Oficina 202, Villavicencio, Colombia; NIT # 822000712–8 (Colombia) [SDNTK]
CONCRETOS CALI S.A., Calle 7 No. 82–65, Cali, Colombia [SDNT]
CONDE RUBIO, Nancy (a.k.a. ''ALEXANDRA RUBIO SILVA''; a.k.a. ''DORIS ADRIANA''; a.k.a. ''LUZ DARY''; a.k.a. ''MARITZA''), Colombia; DOB 02 Sep 1972; alt. DOB 19 Nov 1973; POB Bogota, Colombia; citizen Colombia; nationality Colombia; Cedula No. 20645502 (Colombia) (individual) [SDNTK]
CONFECCIONES LINA MARIA LTDA., Factoria La Rivera, La Union, Valle, Colombia; NIT # 800026667–7 (Colombia) [SDNT]
CONFECCIONES LORD S.A., Carrera 74 No. 76 -150, Barranquilla, Atlantico, Colombia; NIT # 890101890–1 (Colombia) [SDNT]
CONGOCOM TRADING HOUSE, Butembo, Congo, Democratic Republic of the [DRCONGO]
CONSORCIO INMOBILIARIO DEL VALLE DE CULIACAN, S.A. DE C.V., Calle Miguel Hidalgo No. 590, #3, Culiacan, Sinaloa, Mexico; Calle Rodolfo G. Robles No. 158, Culiacan, Sinaloa, Mexico; Ave. Alvaro Obregon No. 1800, 74M, Colinas de San Miguel, Culiacan, Sinaloa, Mexico; Blvd. Emiliano Zapata No. 20, Col. Centro, Culiacan, Sinaloa, Mexico; Valle Aldama No. 257, Col. Centro, Culiacan, Sinaloa, Mexico; Ave. Alvaro Obregon No. 1800, 76M, Colinas de San Miguel, Culiacan, Sinaloa, Mexico; Ave. Alvaro Obregon No. 1800, 75M, Colinas de San Miguel, Culiacan, Sinaloa, Mexico; Calle Miguel Hidalgo No. 590, #4, Culiacan, Sinaloa, Mexico; Ave. Alvaro Obregon No. 1800, 77M, Colinas de San Miguel, Culiacan, Sinaloa, Mexico; R.F.C. CIV0106199MA (Mexico) [SDNTK]
CONSTRUCCIONES ASTRO S.A. (f.k.a. CONSTRUCTORA CASCADA; f.k.a. SOCIEDAD CONSTRUCTORA LA CASCADA S.A.), Carrera 4 No. 12–41 of. 1401, Cali, Colombia; Calle 1A 62A–120 B2 108, Cali, Colombia; Calle 13 3–22 piso 12 y piso 14, Cali, Colombia; Carrera 64 1B–83, Cali, Colombia; Carrera 64 1C–63, Cali, Colombia; Apartado Aereo 10077, Cali, Colombia; Calle 1A 62A–120 4114, Cali, Colombia; Calle 1A 62A–120, Cali, Colombia; Carrera 4 No. 12–41 of. 1402, Edificio Seguros Bolivar, Cali, Colombia; Carrera 4 No. 12–41 of. 1403, Cali, Colombia; Calle 1A 62A–120 2418, Cali, Colombia; Calle 1A 62A–120 2305, Cali, Colombia; Calle 1A 62A–120 6245, Cali, Colombia; NIT # 890307311–4 (Colombia) [SDNT]
CONSTRUCCIONES AVENDANO GUTIERREZ Y CIA. LTDA. (a.k.a. CONAGE LTDA.), Carrera 71 No. 57–07, Bogota, Colombia; NIT # 800211560–0 (Colombia) [SDNT]
CONSTRUCCIONES COLOMBO-ANDINAS LTDA., Carrera 8 No. 16–79 of. 504, Bogota, Colombia; Calle 29 No. 36–61, Bogota, Colombia; NIT # 860505252–8 (Colombia) [SDNT]
CONSTRUCCIONES E INVERSIONES LTDA., Calle 15 No. 10–52, La Union, Valle, Colombia; NIT # 800154939–3 (Colombia) [SDNT]
CONSTRUCCIONES LA RESERVA S.A., Carrera 105 No. 14–01, Cali, Colombia; NIT # 900100336–3 (Colombia) [SDNT]
CONSTRUCCIONES PROGRESO DEL PUERTO S.A. (a.k.a. CONPUERTO S.A.), Calle 12A No. 26–22, Puerto Tejada, Colombia; NIT # 817000779–2 (Colombia) [SDNT]
CONSTRUCTORA ALTAVISTA INTERNACIONAL S.A. (a.k.a. CONASA S.A.), Calle 77 B No. 57—141, Ofc. 917, Barranquilla, Colombia; NIT # 802019866–4 (Colombia) [SDNT]
CONSTRUCTORA ALTOS DEL RETIRO LTDA., Carrera 7 No. 72–28 of. 301, Bogota, Colombia; Carrera 4 No. 86–88, Bogota, Colombia; Transversal 3 No. 85–10 apt. 401 Interior 1, Bogota, Colombia; NIT # 890329139–8 (Colombia) [SDNT]
CONSTRUCTORA AMERICA S.A., Carrera 63 No. 17–07, Bogota, Colombia; NIT # 830125002–3 (Colombia) [SDNT]
CONSTRUCTORA CENTRAL DEL VALLE LTDA. (a.k.a. C.C.V. LTDA.), Calle 10 No. 44A–26, Cali, Colombia; NIT # 800144098–1 (Colombia) [SDNT]
CONSTRUCTORA DIMISA LTDA., Calle 70N No. 14–31, Cali, Colombia [SDNT]
CONSTRUCTORA E INMOBILIARIA ANDINA S.A., Calle 16 Norte No. 9N–41, Cali, Colombia; NIT # 800155233–7 (Colombia) [SDNT]
CONSTRUCTORA E INMOBILIARIA URVALLE CIA. LTDA., Carrera 9 No. 9–49 of. 902, Cali, Colombia; NIT # 800094652–7 (Colombia) [SDNT]
CONSTRUCTORA EL NOGAL S.A. (f.k.a. CONE S.A.; f.k.a. CONSTRUEXITO S.A.), Avenida 2N No. 7N–55 of. 501, Cali, Colombia; Calle 2A No. 65A-110, apto. 501 B3, Cali, Colombia; NIT # 800051378–9 (Colombia) [SDNT]
CONSTRUCTORA GOPEVA LTDA., Avenida 3A No. 51–15, Cali, Colombia [SDNT]
CONSTRUCTORA IRAKA S.A., Carrera 7 No. 132–82, Bogota, Colombia; NIT # 830111113–1 (Colombia) [SDNT]
CONSTRUCTORA JUANAMBU S.A., Carrera 105 No. 14–01, Cali, Colombia; NIT # 900100334–9 (Colombia) [SDNT]
CONSTRUCTORA LOMA LINDA S.A., Carrera 105 No. 14–01, Cali, Colombia; NIT # 900100191–2 (Colombia) [SDNT]
CONSTRUCTORA PYNZAR LTDA., Avenida 3 No. 21–50 Apt. 800, Cali, Colombia; Avenida 3 Norte No. 21–44, Cali, Colombia; Avenida 3 No. 21–50, Cali, Colombia; NIT # 800240723–8 (Colombia) [SDNT]
CONSTRUCTORA TREMI LTDA., Carrera 1A Oeste No. 68–75, Cali, Colombia [SDNT]
CONSTRUCTORA UMBRIA S.A., Carrera 105 No. 14–01, Cali, Colombia; NIT # 900100194–4 (Colombia) [SDNT]
CONSTRUCTORA UNIVERSAL LTDA., Carrera 50 No. 9B–20 of. 07, Cali, Colombia; Calle 52 No. 28E–30, Cali, Colombia; NIT # 800112051–9 (Colombia) [SDNT]
CONSTRUVIDA S.A., Calle 70N No. 14–31, Cali, Colombia; Avenida 2N No. 7N–55 of. 521, Cali, Colombia; Carrera 68 No. 13B–61 of. 104B, Cali, Colombia; NIT # 800108122–8 (Colombia) [SDNT]
CONSULTORIA DE INTERDIVISAS, S.A. DE C.V., Carretera Aeropuerto 1900, Centro Comercial Otay, Local G–16, Tijuana, Baja California CP 22500, Mexico; R.F.C. CIN–010123-MX9 (Mexico) [SDNTK]
CONSULTORIA DE OCCIDENTE, S.A. DE C.V., Guadalajara, Jalisco, Mexico; Paseo de

Ensenada 170, Tijuana, Baja California CP 22200, Mexico [SDNTK]
CONSULTORIA EMPRESARIAL ESPECIALIZADA LTDA., Avenida 2N No. 7N–55 of. 421, Cali, Colombia; NIT # 800109042–1 (Colombia) [SDNT]
CONSULTORIA INTEGRAL Y ASESORIA EMPRESARIAL S.A. (f.k.a. ASECOM S.A.; a.k.a. COINEMP S.A.), Calle 15 Norte No. 6N–34 ofc. 404, Cali, Colombia; NIT # 890326149–8 (Colombia) [SDNT]
CONSULTORIA SANTAFE E.U., Carrera 13A No. 89–38 of. 713, Bogota, Colombia; NIT # 830043033–9 (Colombia) [SDNT]
CONSULTORIAS FINANCIERAS S.A. (a.k.a. COFINANZAS), Carrera 3 No. 12–40 ofc. 1001, Cali, Colombia; NIT # 805017446–6 (Colombia) [SDNT]
CONTACTEL COMUNICACIONES S.A., Calle 5 No. 46–83 local 218, Cali, Colombia; Calle 18 No. 106–98 of. 302, 303, Cali, Colombia; NIT # 805020429–1 (Colombia) [SDNT]
CONTEX, S.A., Panama [CUBA]
CONTINENTE MOVIL Y SERVICIOS S.R.L., Urb. Residencial Santa Rosa, MZ G Lt. 20, Callao, Peru; RUC # 20383848483 (Peru) [SDNTK]
CONTINUE PROFESSIONAL EDUCATION INC. (a.k.a. GULF MOTOR SALES INC.), 811 S. Central Expwy, Ste 210, Richardson, TX 75080; US FEIN 08000068–09 [LIBERIA]
CONTINUITY IRA (CIRA) (a.k.a. CONTINUITY ARMY COUNCIL; a.k.a. CONTINUITY IRISH REPUBLICAN ARMY; a.k.a. REPUBLICAN SINN FEIN), United Kingdom [FTO] [SDGT]
COOMULCOSTA (a.k.a. COOPERATIVA MULTIACTIVA DE LA COSTA COOMULCOSTA LTDA.), Carrera 14 No. 35B Esquina, Barranquilla, Colombia; Carrera 48 No. 76–49, Barranquilla, Colombia; Via 40 No. 71–197 Bodega 504, Barranquilla, Colombia; NIT # 802006273–0 (Colombia) [SDNT]
COOPCREAR (a.k.a. COOPERATIVA DE TRABAJO ASOCIADO DE COLOMBIA), Transversal 29 No. 35A–29, Bogota, Colombia; Avenida 13 No. 78–54, Cali, Colombia; Calle 13 No. 78–54, Cali, Colombia; NIT # 830066040–1 (Colombia) [SDNT]
COOPER, Randolph; DOB 28 Oct 1950; Former Managing Director, Roberts International Airport (individual) [LIBERIA]
COOPERATIVA DE SERVICIO DE TRANSPORTE DE CARGA DE COLOMBIA LTDA. (a.k.a. COOPERATIVA DE SERVICIO DE TRANSPORTE DE CARGA MULTIMODAL DE COLOMIBA LTDA.; a.k.a. COOTRANSMULTI H.H. LTDA.), Calle 30 No. 10–50, Barranquilla, Colombia; Calle 35 No. 36–68, Barranquilla, Colombia; NIT # 802019665–0 (Colombia) [SDNT]
COOPERATIVA MERCANTIL COLOMBIANA COOMERCOL (a.k.a. COOMERCOL), Diagonal 24 Transv. 11–99, Cali, Colombia; Pereira, Colombia; Calle 8 No. 31–11 Local 2, Cali, Colombia; NIT # 805010372–8 (Colombia) [SDNT]
COOPERATIVA MERCANTIL DEL SUR LTDA. (a.k.a. COOMERSUR; a.k.a. COOPMERSUR), Carrera 43 No. 16A–19 La Colina, Pasto, Colombia; NIT # 814002508–1 (Colombia) [SDNT]
COOPERATIVA MULTIACTIVA DE COLOMBIA FOMENTAMOS (a.k.a. FOMENTAMOS), Transversal 29 No. 35A–29, Bogota, Colombia; NIT # 830060914–4 (Colombia) [SDNT]
COOPERATIVA MULTIACTIVA DE COMERC. DROGUISTA Y FARMACEUTICA DROFARCO (a.k.a. DROFARCO), Via Circunvalar, Bodega M-A–3, Barranquilla, Colombia; Metroparque Bodega Mz. 3, Barranquilla, Colombia; Calle 110 No. 6–336, Barranquilla, Colombia; NIT # 802012877–3 (Colombia) [SDNT]
COOPERATIVA MULTIACTIVA DE DISTRIBUCION FARMAVISION LTDA. (a.k.a. FARMAVISION LTDA.), Carrera 24 No. 4–19, Bogota, Colombia; NIT # 830037372–6 (Colombia) [SDNT]
COOPERATIVA MULTIACTIVA DISTRIBUIDORA DE SANTANDER COOPDISAN (a.k.a. COOPDISAN), Calle 52 No. 31–148 of. 201, Bucaramanga, Colombia; Calle 45 No. 9 Occ-04, Bucaramanga, Colombia; Calle 52 No. 31–148, Bucaramanga, Colombia; Carrera 27 No. 65–60 La Victoria, Bucaramanga, Colombia; Carrera 33 No. 108–49, Floridablanca, Colombia; NIT # 804005384–2 (Colombia) [SDNT]
CO-OPERATIVE EXPORT-IMPORT ENTERPRISE (a.k.a. CEIE), 259/263 Bogyoke Aung San Street, Yangon, Burma [BURMA]
COOPIFARMA (a.k.a. COOPERATIVA MULTIACTIVA DE COMERCIALIZACION Y SERVICIOS DE COLOMBIA), Carrera 27 No. 47A–06, Bogota, Colombia; Carrera 13A No. 28–38 of. 215, Bogota, Colombia; Calle 54 No. 22–50, Bucaramanga, Colombia; NIT # 830071338–9 (Colombia) [SDNT]
COPA DE PLATA S.A. DE C.V., Culiacan, Sinaloa, Mexico; R.F.C. CPL9103222F5 (Mexico) [SDNTK]
COPSERVIR LTDA. (a.k.a. COOPERATIVA MULTIACTIVA DE EMPLEADOS DE DISTRIBUIDORES DE DROGAS COPSERVIR LTDA.; f.k.a. DISTRIBUIDORA DE DROGAS LA REBAJA PRINCIPAL S.A.; f.k.a. DISTRIBUIDORA DE DROGAS LA REBAJA S.A.; f.k.a. DROGAS LA REBAJA), Carrera 66A No. 53–47 piso 3, Bogota, Colombia; Calle 18 No. 121–130 Avenida Canasgordas Pance, Cali, Colombia; Calle 10 No. 4–47 piso 19, Cali, Colombia; Carrera 7A No. 14–25 piso 2, Cali, Colombia; Carrera 7 No. 13–132 piso 4, Cali, Colombia; Carrera 10 No. 11–71, Cali, Colombia; Calle 14 No. 6–66, Cali, Colombia; Carrera 99 No. 46A–10 Bdg 6 y 8, Bogota, Colombia; Calle 4 No. 22–24, Bogota, Colombia; NIT # 830011670–3 (Colombia) [SDNT]
COPTRADE COMPANY LIMITED (PHARMACEUTICAL AND CHEMICAL DIVISION), P.O. Box 246, Khartoum, Sudan; Port Sudan, Sudan [SUDAN]
COPTRADE ENG AND AUTOMOBILE SERVICES CO LTD. (f.k.a. KORDOFAN AUTOMOBILE COMPANY), P.O. Box 97, Khartoum, Sudan [SUDAN]
CORBURN 13 FARM, Chegutu, Zimbabwe [ZIMBABWE]
CORIC, Valentin; DOB 23 Jun 1956; POB Citluk, Bosnia-Herzegovina (individual) [BALKANS]
CORONEL VILLAREAL, Ignacio (a.k.a. ''NACHO CORONEL''), Manzanillo, Colima, Mexico; DOB 01 Feb 1954; POB Veracruz, Mexico; alt. POB Canelas, Durango, Mexico; citizen Mexico; nationality Mexico (individual) [SDNTK]
CORPORACION ARGENTINA DE INGENIERIA Y ARQUITECTURA, S.A. (a.k.a. COPIA, S.A.), San Martin 323, 4th Floor, Buenos Aires, Argentina [CUBA]
CORPORACION CIMEX S.A. (a.k.a. CIMEX; a.k.a. CIMEX CUBA; a.k.a. COMERCIO INTERIOR, MERCADO EXTERIOR), Edificio Sierra Maestra, Avenida Primera entre 0 y 2, Miramar Playa, Ciudad de la Habana, Cuba; and all other locations worldwide [CUBA]
CORPORACION CIMEX, S.A., Panama [CUBA]
CORPORACION CLUB DEPORTIVO TULUA (a.k.a. CORTULUA), Carrera 26 No. 32–70 B. Salesiano, Tulua, Valle, Colombia; NIT # 800097185–2 (Colombia) [SDNT]
CORPORACION DE ALMACENES POR DEPARTAMENTOS S.A. (a.k.a. C.A.D. S.A.), Diagonal 127A No. 17–34, Bogota, Colombia; NIT # 800173127–0 (Colombia) [SDNT]
CORPORACION DE INVERSIONES EMPRESARIALES S.A., Jr. Bolognesi 125, Oficina 1002, Lima, Peru; RUC # 20503541727 (Peru) [SDNTK]
CORPORACION DEPORTIVA AMERICA (a.k.a. CLUB AMERICA DE CALI; a.k.a. CLUB DEPORTIVO AMERICA), Sede Naranjal, Cali, Colombia; Carrera 56 No. 2–70, Cali, Colombia; Calle 13 Carrera 70, Cali, Colombia; Sede Cascajal, Cali, Colombia; Calle 24N No. 5BN–22, Cali, Colombia; Avenida Guadalupe No. 2–70, Cali, Colombia; NIT # 890305773–4 (Colombia) [SDNT]
CORPORACION HOTELERA DEL CARIBE LIMITADA (a.k.a. APARTAHOTEL TRES CASITAS; a.k.a. ''TRES CASITAS''), Avenida Colombia No. 1–60, San Andres, Providencia, Colombia; NIT # 800104679–1 (Colombia) [SDNT]
CORPORACION IBEROAMERICANA DEL COMERCIO (a.k.a. CIDECO), Spain [CUBA]
CORRALES SAN IGNACIO S.P.R. DE R.L. DE C.V., Domicilio en Ejido Ancon de Carros, Saucillo, Chihuahua, Mexico; R.F.C. CSI–000516–2U3 (Mexico) [SDNTK]
CORREA GIRALDO, Ricardo Leon, c/o COOPCREAR, Bogota, Colombia; c/o COOPERATIVA DE TRABAJO ASOCIADO ACTIVAR, Bogota, Colombia; Carrera 1 No. 2–45 Bloque A ap. 33, Cali, Colombia; DOB 27 Oct 1954; Cedula No. 70085655 (Colombia) (individual) [SDNT]
CORREA PULGARIN, Ernesto, c/o AGROPECUARIA LA ROBLEDA S.A., Cali, Colombia; Cedula No. 2510585 (Colombia) (individual) [SDNT]
CORREAL GUZMAN, Gloria Ines, c/o GIAMX LTDA., Bogota, Colombia; Cedula No. 51678272 (Colombia) (individual) [SDNT]
CORREDOR IBAGUE, Jose Maria (a.k.a. ''ANGEL ORTIZ''; a.k.a. ''BOYACO''; a.k.a. ''CARLOS ALBERTO HENAO''; a.k.a. ''CHEPE''; a.k.a. ''HECTOR JAIME

SANCHEZ''; a.k.a. ''JOSE ADRIAN RODRIGUEZ BUITRAGO''; a.k.a. ''JOSE GILBERTO RODRIGUEZ PEREZ''; a.k.a. ''JOSE LEONEL''), Colombia; DOB 17 Dec 1966; POB Santana, Boyaca, Colombia; citizen Colombia; nationality Colombia; Cedula No. 4241983 (Colombia) (individual) [SDNTK]

CORREDOR RUEDA, Jaqueline, Calle 52A No. 31–67, Bogota, Colombia; c/o COPSERVIR LTDA., Bogota, Colombia; c/o CAJA SOLIDARIA, Bogota, Colombia; c/o FARMAVISION LTDA., Bogota, Colombia; c/o MEGAPHARMA LTDA., Bogota, Colombia; Cedula No. 51815763 (Colombia) (individual) [SDNT]

CORTES QUINTERO, Sandra, c/o CONSTRUCCIONES PROGRESO DEL PUERTO S.A., Puerto Tejada, Colombia; c/o UNIDAS S.A., Cali, Colombia; c/o CREDISA S.A., Cali, Colombia; c/o COMPANIA DE FOMENTO MERCANTIL S.A., Cali, Colombia; DOB 21 Jun 1971; POB Cali, Valle, Colombia; Cedula No. 66827003 (Colombia); Passport 66827003 (Colombia) (individual) [SDNT]

CORTES, Polania Raquel, c/o MAPRI DE COLOMBIA LTDA., Bogota, Colombia; DOB 5 Nov 1965; Cedula No. 55150515 (Colombia); Passport 55150515 (Colombia) (individual) [SDNT]

CORYBANTES LTD, New Boudary House, London Road, Sunningdale, Ascot, Berkshire SL5 0DJ, United Kingdom; Middleton House, Titlarks Hill Road, Sunningdale, Ascot, Berkshire SL5 0JB, United Kingdom; Business Registration Document # FC21190 (United Kingdom) [ZIMBABWE]

COSMEPOP (f.k.a. BLAIMAR; f.k.a. CIA. INTERAMERICANA DE COSMETICOS S.A.; f.k.a. COINTERCOS S.A.; a.k.a. COOPERATIVA DE COSMETICOS Y POPULARES COSMEPOP; f.k.a. LABORATORIOS BLAIMAR DE COLOMBIA S.A.; f.k.a. LABORATORIOS BLANCO PHARMA S.A.), A.A. 55538, Bogota, Colombia; Carrera 99 y 100 No. 46A–10, Bodega 4, Bogota, Colombia; Calle 12B No. 27–37/39, Bogota, Colombia; Calle 26 Sur No. 7–30 Este, Bogota, Colombia; Calle 12A No. 27–72, Bogota, Colombia; NIT # 800251322–5 (Colombia) [SDNT]

COTEI, Milan, Italy [CUBA]

COTRINO TRUJILLO, Olga, c/o FARMA XXI LTDA., Neiva, Huila, Colombia; Cedula No. 36183653 (Colombia); Passport 36183653 (Colombia) (individual) [SDNT]

COTTY (vessel) [CUBA]

CPV SISTEMAS GRAFICOS S.L., Rodriguez San Pedro 2, 28015 Madrid, Madrid, Spain; C.I.F. B82201039 (Spain) [SDNT]

CRASESORIAS E.U., Avenida 11 Norte No. 7N–201, Cali, Colombia; NIT # 805016474–8 (Colombia) [SDNT]

CREACIONES DEPORTIVAS WILLINGTON LTDA., Cosmocentro, Local 130, Cali, Colombia; Calle 5 No. 25–65, Cali, Colombia [SDNT]

CREDIREBAJA S.A, Calle 16 No. 100–88, Cali, Colombia; Calle 19 No. 2–29 of. 3001, Cali, Colombia; NIT # 805001030–6 (Colombia) [SDNT]

CREDISA S.A. (f.k.a. COMERCIALIZADORA AUTOMOTRIZ S.A.), Avenida 7 Norte No. 23N–81, Cali, Colombia; Carrera 7D Bis No. 68–58, Cali, Colombia; Avenida 7 Norte No. 23–77, Cali, Colombia; NIT # 800065773–6 (Colombia) [SDNT]

CREDISOL (a.k.a. COOPERATIVA DE AHORRO Y CREDITO PARA EL PROGRESO SOCIAL; a.k.a. COOPERATIVA MULTIACTIVA CREDISOL), Calle 39 Bis A No. 27–16, Bogota, Colombia; Transversal 29 No. 39–92, Bogota, Colombia; NIT # 830033943–3 (Colombia) [SDNT]

CREDIVIDA, Calle 16 No. 100–88, Cali, Colombia; Cedula No. 31919241 (Colombia) [SDNT]

CRETA S.A., Calle 15 No. 10–52, La Union, Valle, Colombia; NIT # 800019962–6 (Colombia) [SDNT]

CRIADERO DE POLLOS EL ROSAL S.A. (f.k.a. INDUSTRIA AVICOLA PALMASECA S.A.), Carretera Central via Aeropuerto Palmaseca, Colombia; Carrera 61 No. 11–58, Cali, Colombia; NIT # 800146749–7 (Colombia) [SDNT]

CRIADERO LA LUISA E.U. (f.k.a. INDUSTRIA AGROPECUARIA SANTA ELENA LTDA.), Avenida 7 Norte No. 23N–81, Cali, Colombia; Avenida 7 Norte No. 23–77, Cali, Colombia; Calle 15 No. 26–400, Cali, Colombia; Jamundi, Valle, Colombia; NIT # 860503330–5 (Colombia) [SDNT]

CRIADERO SANTA GERTRUDIS S.A., Callejon Zapatoca Km. 1 Via Jamundi, Jamundi, Valle, Colombia; NIT # 805014721–3 (Colombia) [SDNT]

CRIOLLO (vessel) [CUBA]

CRUZ REYES, Antonio Pedro, Milan, Italy (individual) [CUBA]

CRUZ, Juan M. de la, Dai-Ichi Bldg. 6th Floor, 10–2 Nihombashi, 2–chome, Chuo-ku, Tokyo 103, Japan; Director, Banco Nacional de Cuba (individual) [CUBA]

CRYMSA—ARGENTINA, S.A., Buenos Aires, Argentina [CUBA]

CUARTES MORALES, Juan Carlos, c/o INVERSIONES Y CONSTRUCCIONES VALLE S.A., Cali, Colombia; DOB 9 Nov 1968; Cedula No. 16757375 (Colombia) (individual) [SDNT]

CUBACANCUN CIGARS AND GIFT SHOPS, Cancun, Mexico [CUBA]

CUBAEXPORT, Spain [CUBA]

CUBAFRUTAS, Spain [CUBA]

CUBAN CIGARS TRADE, Italy [CUBA]

CUBANACAN GROUP (a.k.a. CUBANACAN; a.k.a. EL GRUPO CUBANACAN), Calle 68 e/5ta A, Apartado 16046, Ciudad de La Habana, Cuba [CUBA]

CUBANACAN INTERNATIONAL B.V, Visseringlaan 24, 2288 ER Rijswijk, Zevenhuizen, Netherlands; Registration ID 27134614 (Netherlands) [CUBA]

CUBANACAN U.K. LIMITED, Unit 49 Skylines Village, Limeharbour, Docklands, United Kingdom; Registration ID 2720485 (United Kingdom) [CUBA]

CUBANATUR, Baja California 255, Edificio B. Oficina 103, Condesa 06500, Mexico, D.F., Mexico [CUBA]

CUBATABACO, Spain [CUBA]

CUBILLOS CORREDOR, Manuel Antonio, c/o INTERCONTINENTAL DE AVIACION S.A., Bogota, Colombia; c/o INTERFIAR, Bogota, Colombia; Carrera 69BN No. 43A–70 Apt. 401 Int. 3, Bogota, Colombia; DOB 28 Sep 1948; POB Bogota, Colombia; Cedula No. 19057000 (Colombia); Passport P050296 (Colombia) (individual) [SDNT]

CUBILLOS, Bellanidia, c/o FARMEDIS LTDA., Bogota, Colombia; Cedula No. 36179143 (Colombia) (individual) [SDNT]

CUECA VILLARAGA, Hernan, c/o DROGAS LA REBAJA BOGOTA S.A., Bogota, Colombia; Cedula No. 11352426 (Colombia) (individual) [SDNT]

CUENCA, RAMON CESAR, Panama [CUBA]

CUERO MARTINEZ, Otalvaro, c/o INVHERESA S.A., Cali, Colombia; c/o ALKALA ASOCIADOS S.A., Cali, Colombia; DOB 17 Aug 1955; Cedula No. 16599979 (Colombia) (individual) [SDNT]

CUESTA LEON, Carlos Pompeyo, c/o COLCHONES SUNMOONS LTDA, Bogota, Colombia; DOB 29 Nov 1965; POB Ubala, Cundinamarca, Colombia; citizen Colombia; nationality Colombia; Cedula No. 80375525 (Colombia) (individual) [SDNTK]

CUESTA LEON, Josue (a.k.a. ''DON JULIO''; a.k.a. ''EL VIEJO''), Colombia; DOB 26 Jan 1970; POB Ubala, Cundinamarca, Colombia; citizen Colombia; nationality Colombia; Cedula No. 97610086 (Colombia) (individual) [SDNTK]

CUEVAS CABRERA, Erminso (a.k.a. ''MINCHO''); DOB 16 Sep 1960; POB El Paujil, Caqueta, Colombia; citizen Colombia; nationality Colombia; Cedula No. 96328518 (Colombia) (individual) [SDNTK]

CUJAR DE FORERO, Claudia, c/o BONOMERCAD S.A., Bogota, Colombia; c/o DISTRIBUIDORA AGROPECUARIA COLOMBIANA S.A., Cali, Colombia; Cedula No. 20198740 (Colombia) (individual) [SDNT]

CULMA SUNZ, Bladimir (a.k.a. CULMAN SANZ, Bladimir; a.k.a. ''VLADIMIR''), Colombia; DOB 23 Sep 1979; POB El Castillo, Meta, Colombia; citizen Colombia; nationality Colombia; Cedula No. 86068233 (Colombia) (individual) [SDNTK]

CULZAT LUGSIR, Rafael Alberto, c/o INVERSIONES CULZAT GUEVARA Y CIA. S.C.S., Cali, Colombia; c/o CONSTRUCTORA ALTOS DEL RETIRO LTDA., Bogota, Colombia; Transversal 3 No. 86–73, Bogota, Colombia; Calle 7 Oeste No. 2–228, Cali, Colombia; DOB 23 Oct 1940; Cedula No. 14962523 (Colombia); Passport P551220 (Colombia) (individual) [SDNT]

CUMEXINT, S.A., 1649 Adolfo Prieto, Colonia del Valle, Mexico City, Mexico [CUBA]

CURE SABAGH Y CIA. S.C.S., Calle 32 No. 43A–89, Barranquilla, Colombia; NIT # 802000463–6 (Colombia) [SDNT]

CURE SABAGH, Diana Maria, c/o CASTRO CURE Y CIA. S.C.S., Barranquilla, Colombia; c/o CURE SABAGH Y CIA. S.C.S., Barranquilla, Colombia; c/o FUDIA LTDA., Barranquilla, Colombia; c/o CABLES NACIONALES CANAL S.A., Barranquilla, Colombia; DOB 24 Oct 1967; POB Barranquilla, Colombia; Cedula No. 22443685 (Colombia) (individual) [SDNT]

CUREF METAL PROCESSING BV, Boezembolcht 23, Rotterdam, Netherlands [CUBA]

CURREA CORREA, Carlos Alberto (a.k.a. ''CUCU''; a.k.a. ''LA LLAVERIA''), Calle 24

No. 20–22, Tulua, Valle, Colombia; Spain; citizen Colombia; nationality Colombia; Cedula No. 16347900 (Colombia) (individual) [SDNT]

CUSTOMER NETWORKS S.L., Serrano 166, 28002 Madrid, Madrid, Spain; Ronda Manuel Granero 69, 28043 Madrid, Madrid, Spain; C.I.F. B82998543 (Spain) [SDNT]

DA COSTA, Luis Fernando (a.k.a. BEIRA-MAR, Fernandinho); DOB 4 Jul 1967; POB Rio de Janeiro (individual) [SDNTK]

DABENGWA, Dumiso; DOB 6 Dec 1939; Passport AD000005 (Zimbabwe); Politburo Committee Member (individual) [ZIMBABWE]

DABENGWA, Ijeoma; DOB 27 Oct 1971; Passport AN032426 (Zimbabwe); Child of Dumiso Dabengwa (individual) [ZIMBABWE]

DAGHIR, Ali Ashour, 2 Western Road, Western Green, Thames Ditton, Surrey, United Kingdom (individual) [IRAQ2]

DAGON INTERNATIONAL LIMITED (a.k.a. DAGON INTERNATIONAL; a.k.a. DAGON INTERNATIONAL CONSTRUCTION COMPANY), Dagon Centre, 6th Floor, 262–264 Pyay Road, Myayingone, Sanchaung Township, Yangon, Burma [BURMA] [JADE]

DAGON TIMBER LIMITED (a.k.a. DAGON TIMBER), Dagon Centre, 262–264 Pyay Road, Myaynigone, Yangon, Burma [BURMA]

DAIS (a.k.a. IRAN DAIS); Vessel Registration Identification IMO 8309696 (vessel) [NPWMD]

DALIPI, Tahir; DOB 1958; POB Ilince, Serbia and Montenegro (individual) [BALKANS]

DAMASANE, Abigail; DOB 27 May 1952; Deputy Minister for Women's Affairs, Gender and Community Development (individual) [ZIMBABWE]

DANDY (a.k.a. IRAN DANDY); Vessel Registration Identification IMO 8320157 (vessel) [NPWMD]

DAPPER (a.k.a. IRAN DAPPER); Vessel Registration Identification IMO 8309646 (vessel) [NPWMD]

DARKAZANLI, Mamoun, Uhlenhorsterweg 34 11, 22085, Hamburg, Germany; DOB 4 Aug 1958; POB Aleppo, Syria; Passport 1310636262 (Germany) (individual) [SDGT]

DARRAH, Kaddieyatu (a.k.a. DARA, Kaddieyatu; a.k.a. DARA, Kadiyatu; a.k.a. DARAH, Kadiyatu); Special Assistant to former President of Liberia Charles Taylor (individual) [LIBERIA]

DARRAJI, Kamel (a.k.a. DARRAJI, Kamal Ben Mohamed Ben Ahmed), via Belotti, n. 16, Busto Arsizio, Varese, Italy; DOB 22 Jul 1967; POB Menzel Bouzelfa, Tunisia; nationality Tunisia; Italian Fiscal Code DRRKLB67L22Z352S; alt. Italian Fiscal Code DRRKML67L22Z352Q; Passport L029899 issued 14 Aug 1995 expires 13 Aug 2000 (individual) [SDGT]

DARWISH, Sulayman Khalid (a.k.a. ABU AL-GHADIYA), Syria; DOB 1976; alt. DOB circa 1974; POB Outside Damascus, Syria; nationality Syria; Passport 11012 (Syria); alt. Passport 3936712 (Syria) (individual) [SDGT]

DASTJERDI, Ahmad Vahid (a.k.a. VAHID, Ahmed Dastjerdi); DOB 15 Jan 1954; Diplomatic Passport A0002987 (Iran) (individual) [NPWMD]

DAVALOS TORRES, Jorge, Colombia; DOB 14 Dec 1972; citizen Colombia; Cedula No. 94377215 (Colombia); International FARC Commission Member for Canada (individual) [SDNTK]

DAVILA RAMIREZ, Oscar Julio, c/o DISTRIBUIDORA MIGIL CALI S.A., Cali, Colombia; c/o CREDIREBAJA S.A., Cali, Colombia; c/o PROSALUD Y BIENSTAR S.A., Cali, Colombia; c/o COMERCIALIZADORA INTERTEL S.A., Cali, Colombia; c/o COPSERVIR LTDA., Bogota, Colombia; Cedula No. 16677937 (Colombia) (individual) [SDNT]

DAWOOD IBRAHIM ORGANIZATION (a.k.a. D COMPANY), India; United Arab Emirates; Pakistan [SDNTK]

DAYTONA POOLS, INC., 225 Syracuse Place, Richardson, TX 75081 [LIBERIA]

DAZA QUIROGA, Hugo Carlos, c/o LABORATORIOS GENERICOS VETERINARIOS, Bogota, Colombia; c/o DISTRIBUIDORA DE DROGAS CONDOR LTDA., Bogota, Colombia; c/o LABORATORIOS KRESSFOR DE COLOMBIA S.A., Bogota, Colombia; c/o DISTRIBUIDORA MYRAMIREZ S.A., Bogota, Colombia; DOB 23 Feb 1954; Cedula No. 19236485 (Colombia) (individual) [SDNT]

DAZA RIVERA, Pablo Emilio, c/o DISTRIBUIDORA MYRAMIREZ S.A., Bogota, Colombia; c/o INVERSIONES Y CONSTRUCCIONES ABC S.A., Cali, Colombia; c/o FARMATODO S.A., Bogota, Colombia; c/o RIONAP COMERCIO Y REPRESENTACIONES S.A., Quito, Ecuador; c/o DROGAS LA REBAJA, Cali, Colombia; c/o BLANCO PHARMA S.A., Bogota, Colombia; c/o COLOR 89.5 FM STEREO, Cali, Colombia; c/o LABORATORIOS KRESSFOR, Bogota, Colombia; DOB 9 Mar 1947; Cedula No. 4904545 (Colombia) (individual) [SDNT]

D'CACHE S.A., Calle 25N No. 3AN–39, Cali, Colombia; NIT # 800149284–8 (Colombia) [SDNT]

DE FRANCE, Naomi A., Cubanatur, Baja California 255, Edificio B., Oficina 103, Condesa 06500, Mexico, D.F., Mexico (individual) [CUBA]

DE LA HOZ BULA, Hugo Rafael, c/o COOMULCOSTA, Barranquilla, Colombia; c/o COPSERVIR LTDA., Bogota, Colombia; Cedula No. 8742278 (Colombia) (individual) [SDNT]

DE MARTINI TAMAYO, Sergio Rene (a.k.a. ''CANOSO''); DOB 14 Sep 1962; POB Medellin, Colombia; Cedula No. 71622812 (Colombia) (individual) [SDNT]

DE VERA, Pio Abogne (a.k.a. DE VERA Y ABOGNE, Pio; a.k.a. DE VERA, Esmael; a.k.a. DE VERA, Ismael; a.k.a. DE VERA, Ismail; a.k.a. DE VERA, Pio Abagne; a.k.a. DE VERA, Pio Abogue; a.k.a. OBOGNE, Leo M.; a.k.a. ''ART, Tito''; a.k.a. ''MANEX''), Concepcion, Zaragosa, Nueva Ecija Province, Philippines; DOB 19 Dec 1969; POB Bagac, Bagamanok, Catanduanes Province, Philippines; nationality Philippines (individual) [SDGT]

DECAFARMA S.A., Transversal 29 No. 39–92, Bogota, Colombia; NIT # 800241240–7 (Colombia) [SDNT]

DECOROUS (a.k.a. IRAN DECOROUS); Vessel Registration Identification IMO 8309658 (vessel) [NPWMD]

DEFENSE INDUSTRIES ORGANIZATION (a.k.a. DEFENCE INDUSTRIES ORGANISATION; a.k.a. DIO; a.k.a. SASEMAN SANAJE DEFA; a.k.a. SAZEMANE SANAYE DEFA; a.k.a. ''SASADJA''), P.O. Box 19585–777, Pasdaran Street, Entrance of Babaie Highway, Permanent Expo of Defence Industries Organization, Tehran, Iran [NPWMD]

DEGHDEGH, Ahmed (a.k.a. ''ABU ABDALLAH''; a.k.a. ''AL ILLAH, Abd''); DOB 17 Jan 1967; POB Anser, Jijel, Algeria (individual) [SDGT]

DEHONG THAILONG HOTEL CO., LTD. (a.k.a. DEHONG TAILONG INDUSTRY COMPANY LIMITED; a.k.a. TAI LONG HOTEL; a.k.a. TAI LUNG HOTEL; a.k.a. THAI LONG HOTEL; a.k.a. THAILONG HOTEL), Mang Shih Economic Development Zone, De Hong District, Yunnan Province, China; No. 58, Mangshi Avenue, Luxi City, Yunnan, China [SDNTK]

DEL NORTES CARNES FINAS SAN IGNACIO S.A. DE C.V., Chihuahua, Chihuahua, Mexico [SDNTK]

DEL VASTO CERON, Luis Mario, c/o ADMINISTRADORA DE SERVICIOS VARIOS CALIMA S.A., Cali, Colombia; DOB 26 Jul 1947; Cedula No. 17181655 (Colombia); Passport 17181655 (Colombia) (individual) [SDNT]

DELEGATE (a.k.a. IRAN DELEGATE); Vessel Registration Identification IMO 8320121 (vessel) [NPWMD]

DELGADO ARSENIO, Antonio, Panama (individual) [CUBA]

DELGADO GUTIERREZ, Elias, c/o CONSULTORIA DE INTERDIVISAS, S.A. DE C.V., Tijuana, Baja California, Mexico; c/o CENTRO CAMBIARIO KINO, S.A. DE C.V., Tijuana, Baja California, Mexico; c/o GS PLUS CONSULTORES, S.A. DE C.V., Tijuana, Baja California, Mexico; Calle Ramon Lopez Velarde 36, Colonia Reforma, Tijuana, Baja California CP 22620, Mexico; c/o M Q CONSULTORES, S.A. DE C.V., Tijuana, Baja California, Mexico; DOB 26 Feb 1964; R.F.C. DEGE–640226–3W9 (Mexico) (individual) [SDNTK]

DELGADO GUTIERREZ, Luis Alvaro, c/o TAURA S.A., Cali, Colombia; Cedula No. 16718474 (Colombia) (individual) [SDNT]

DELGADO PRIETO, Roberto, c/o COLPHAR S.A., Bogota, Colombia; Cedula No. 13921914 (Colombia); Passport 13921914 (Colombia) (individual) [SDNT]

DELGADO, Jorge Armando, c/o LABORATORIOS BLANCO PHARMA DE COLOMBIA S.A., Bogota, Colombia; c/o LABORATORIOS KRESSFOR DE COLOMBIA S.A., Bogota, Colombia; c/o FARMATODO S.A., Bogota, Colombia; c/o ALFA PHARMA S.A., Bogota, Colombia; c/o DISTRIBUIDORA MYRAMIREZ S.A., Bogota, Colombia; c/o COPSERVIR LTDA., Bogota, Colombia; c/o LABORATORIOS BLAIMAR DE COLOMBIA S.A., Bogota, Colombia; c/o COSMEPOP, Bogota, Colombia; c/o COINTERCOS S.A., Bogota, Colombia; DOB 4 Aug 1958; Cedula No. 19354318 (Colombia) (individual) [SDNT]

DELIC, Hazim; DOB 13 May 1964; ICTY indictee (individual) [BALKANS]
DELIGHT (a.k.a. IRAN DELIGHT); Vessel Registration Identification IMO 8320133 (vessel) [NPWMD]
DELLOSA, Redendo Cain (a.k.a. AKMAL, Hakid; a.k.a. ALVARADO, Arnulfo; a.k.a. BERUSA, Brandon; a.k.a. DELLOS, Reendo Cain; a.k.a. DELLOSA Y CAIN, Redendo; a.k.a. DELLOSA, Ahmad; a.k.a. DELLOSA, Habil Ahmad; a.k.a. DELLOSA, Habil Akmad; a.k.a. DELLOSA, Redendo Cain Jabil; a.k.a. ILONGGO, Abu; a.k.a. LLONGGO, Abu; a.k.a. MUADZ, Abu), 3111 Ma. Bautista Street, Punta, Santa Ana, Manila, Philippines; DOB 15 May 1972; POB Punta, Santa Ana, Manila, Philippines; nationality Philippines; SSN 33–3208848–3 (Philippines) (individual) [SDGT]
DELOS REYES, Feliciano Semborio, Jr. (a.k.a. ABDILLAH, Abdul; a.k.a. ABDILLAH, Abubakar; a.k.a. ABDILLAH, Ustadz Abubakar; a.k.a. CASTRO, Jorge; a.k.a. DE LOS REYES, Feliciano; a.k.a. DE LOS REYES, Feliciano Abubakar; a.k.a. DELOS REYES Y SEMBERIO, Feleciano; a.k.a. DELOS REYES, Feleciano Semborio; a.k.a. DELOS REYES, Ustadz Abubakar; a.k.a. REYES, Abubakar); DOB 4 Nov 1963; POB Arco, Lamitan, Basilan Province, Philippines; nationality Philippines (individual) [SDGT]
DELVEST HOLDING, S.A. (a.k.a. DELVEST HOLDING COMPANY), Case Postale 236, 10 Bis Rue Du Vieux College 12–11, Geneva, Switzerland [CUBA]
DEMOCRATIC FRONT FOR THE LIBERATION OF PALESTINE—HAWATMEH FACTION (a.k.a. DEMOCRATIC FRONT FOR THE LIBERATION OF PALESTINE; a.k.a. DFLP; a.k.a. RED STAR BATTALIONS; a.k.a. RED STAR FORCES) [SDT]
DENISSENKO, Serguei (a.k.a. DENISENKO, Sergei; a.k.a. DENISSENKO, Sergei), c/o SAN AIR GENERAL TRADING FZE, P.O. Box 2190, Ajman, United Arab Emirates; c/o SAN AIR GENERAL TRADING FZE, P.O. Box 932–20C, Ajman, United Arab Emirates; c/o SAN AIR GENERAL TRADING LLC, 811 S. Central Expwy, Ste 210, Richardson, TX 75080; DOB 1961; Passport 500144635 (Russia) (individual) [LIBERIA]
DEPOSITO POPULAR DE DROGAS S.A., Carrera 6 No. 24–77, Cali, Colombia [SDNT]
DERAKHSHANDEH, AHMAD, c/o BANK SEPAH, No. 33 Hormozan Building, Pirozan St., Sharak Ghods, Tehran, Iran; DOB 11 Aug 1956; POB Iran (individual) [NPWMD]
DERAMCHI, Othman (a.k.a. YOUSSEF, Abou), Via Milanese, 5, 20099 Sesto San Giovanni, Milan, Italy; Piazza Trieste, 11, Mortara, Italy; DOB 7 Jun 1954; POB Tighennif, Algeria; Italian Fiscal Code: DRMTMN54H07Z301T (individual) [SDGT]
DERECHO INTEGRAL Y CIA. LTDA., Calle 22N No. 5A–75 piso 5, Cali, Colombia [SDNT]
DERONJIC, Miroslav; DOB 6 Jun 1945; POB Bratunac, Bosnia-Herzegovina; ICTY indictee (individual) [BALKANS]
DESARROLLO DE PROYECTOS, S.A. (a.k.a. DEPROSA, S.A.), Panama City, Panama [CUBA]
DESARROLLO GEMMA CORPORATION, Calle 52 Bella Vista, Chalet # 17, Panama City, Panama; RUC # 25544701403775 (Panama) [SDNT]
DESARROLLO INDUSTRIAL CUBANO ESPANOL, S.A. (a.k.a. DICESA), Jose Lazaro Caldeano, 6–6, 28016 Madrid, Spain [CUBA]
DESARROLLO INDUSTRIAL CUBANO ESPANOL, S.A. (a.k.a. DICESA), Paseo De La Castellana 157, Madrid, Spain [CUBA]
DESARROLLOS AGROINDUSTRIALES S.A., Tranversal 13A No. 118A–45 Ofc. 301, Bogota, Colombia; NIT # 830000782–2 (Colombia) [SDNT]
DESARROLLOS COMERCIALES E INDUSTRIALES HENAO GONZALEZ Y CIA. S.C.S., Carrera 4A No. 16–04 apt. 303, Cartago, Colombia; NIT # 800160475–2 (Colombia) [SDNT]
DESARROLLOS URBANOS ''DESARROLLAR'' LTDA. (a.k.a. DESARROLLAR LTDA.), Calle 74 No. 53–30, Barranquilla, Colombia; NIT # 890108104–2 (Colombia) [SDNT]
DESME HURTADO, Maximo Zadi (a.k.a. DESME, Zadi), Cerro Alto De La Posada 58, Los Andes, Chile; c/o SISTEMA DE DISTRIBUCION MUNDIAL S.A.C., Lima, Peru; c/o AVIANDINA S.A.C., Lima, Peru; DOB 21 Aug 1958; LE Number 06367724 (Peru) (individual) [SDNTK]
DEVELOPER (a.k.a. IRAN DEVELOPER); Vessel Registration Identification IMO 8309660 (vessel) [NPWMD]
DEVIA SILVA, Luis Edgar (a.k.a. ''RAUL REYES''); DOB 30 Sep 1948; POB La Plata, Huila, Colombia; Cedula No. 14871281 (Colombia) (individual) [SDNTK]
DEVOTEE (a.k.a. IRAN DEVOTEE); Vessel Registration Identification IMO 8309608 (vessel) [NPWMD]
DEVOTIONAL (a.k.a. IRAN DEVOTIONAL); Vessel Registration Identification IMO 8309684 (vessel) [NPWMD]
DHAMAT HOUMET DAAWA SALAFIA (a.k.a. DJAMAAT HOUMAT ED DAAWA ES SALAFIYA; a.k.a. DJAMAAT HOUMAT ED DAWA ESSALAFIA; a.k.a. DJAMAATT HOUMAT ED DAAWA ES SALAFIYA; a.k.a. EL-AHOUAL BATTALION; a.k.a. GROUP OF SUPPORTERS OF THE SALAFIST TREND; a.k.a. GROUP OF SUPPORTERS OF THE SALAFISTE TREND; a.k.a. GROUP PROTECTORS OF SALAFIST PREACHING; a.k.a. HOUMAT ED DAAWA ES SALIFIYA; a.k.a. HOUMAT ED-DAAOUA ES-SALAFIA; a.k.a. HOUMATE ED-DAAWA ES-SALAFIA; a.k.a. HOUMATE EL DA'AWAA ES-SALAFIYYA; a.k.a. KATIBAT EL AHOUAL; a.k.a. KATIBAT EL AHOUEL; a.k.a. PROTECTORS OF THE SALAFIST CALL; a.k.a. PROTECTORS OF THE SALAFIST PREDICATION; a.k.a. SALAFIST CALL PROTECTORS; a.k.a. THE HORROR SQUADRON), Algeria [SDGT]
DHH ENTERPRISES, INC., 811 S. Central Expwy, Ste 210, Richardson, TX 75080 [LIBERIA]
DIAMOND (a.k.a. IRAN DIAMOND); Vessel Registration Identification IMO 8309593 (vessel) [NPWMD]
DIAS DE MENDONCA, Leonardo (a.k.a. DIAS MENDONA, Leonardo; a.k.a. DIAZ MENDONCA, Leonardo); DOB 12 Jan 1963; alt. DOB 1 Dec 1963; alt. DOB 21 Nov 1963; POB Brazil (individual) [SDNTK]
DIAZ GONZALEZ, Rolando, Frankfurt, Germany (individual) [CUBA]
DIAZ HERRERA, Carlos Olimpo, c/o CAMBIOS NASDAQ LTDA, Bogota, Colombia; DOB 07 Feb 1954; POB Pandi, Cundinamarca, Colombia; citizen Colombia; nationality Colombia; Cedula No. 11250581 (Colombia); Passport 11250581 (Colombia) (individual) [SDNTK]
DIAZ MATIZ, Maria Cecilia, c/o LEMOFAR LTDA., Bogota, Colombia; DOB 16 May 1950; Cedula No. 41510904 (Colombia); Passport 41510904 (Colombia) (individual) [SDNT]
DIAZ OREJUELA, Miguel Angel, c/o DIZRIVER Y CIA. S. EN C., Bogota, Colombia; c/o CAMBIOS EURO LTDA, Bogota, Colombia; DOB 15 May 1963; POB Bogota, Colombia; citizen Colombia; nationality Colombia; Cedula No. 17412428 (Colombia); Passport AI481119 (Colombia) (individual) [SDNTK]
DIAZ SANCHEZ, Alberto, c/o INMOBILIARIA U.M.V. S.A., Cali, Colombia; Carrera 66 No. 5–23, Cali, Colombia; c/o CONSTRUCTORA DIMISA LTDA., Cali, Colombia; c/o CONCRETOS CALI S.A., Cali, Colombia; DOB 2 Jan 1956; Cedula No. 16259623 (Colombia) (individual) [SDNT]
DIAZ, Manuel, c/o INMOBILIARIA GALES LTDA, Bogota, Colombia; c/o COMERCIALIZADORA EXPERTA Y CIA. S. EN C., Bogota, Colombia; c/o COMERCIAL DE NEGOCIOS CLARIDAD Y CIA., Bogota, Colombia; DOB 10 Feb 1954; Cedula No. 396358 (Colombia) (individual) [SDNT]
DIAZ, Rosa Isabel, c/o INVHERESA S.A., Cali, Colombia (individual) [SDNT]
DIGNIFIED (a.k.a. IRAN DIGNIFIED); Vessel Registration Identification IMO 8309610 (vessel) [NPWMD]
DIMABE LTDA., Diagonal 127A No. 30–25, Bogota, Colombia; NIT # 800107988–4 (Colombia) [SDNT]
DIODATO DEL GALLO, Marco Marino (a.k.a. RENATO), Bolivia; DOB 28 Jan 1957; POB Italy; citizen Italy; alt. citizen Bolivia; nationality Italy; Passport 072130-A (Italy) (individual) [SDNTK]
DIPLOMAT (a.k.a. IRAN DIPLOMAT); Vessel Registration Identification IMO 8309701 (vessel) [NPWMD]
DIRECCION COMERCIAL Y MARKETING CONSULTORIA EMPRESA UNIPERSONAL (a.k.a. D.C.M. CONSULTORIA E.U.), Calle 12B No. 27–39, Bogota, Colombia; Transversal 4 No. 110A–08, Bogota, Colombia; NIT # 800934781–4 (Colombia) [SDNT]
DISDROGAS LTDA. (f.k.a. RAMIREZ Y CIA. LTDA.), Calle 39 No. 17–42, Neiva, Huila, Colombia; Calle 15 No. 11–34, Pasto, Narino, Colombia; Apartado Aereo 30530, Cali, Colombia; Carrera 38 No. 13–138 Acopi, Yumbo, Valle, Colombia; Carrera 1D Bis. No. 15–55, Neiva, Huila, Colombia; NIT # 800058576–2 (Colombia) [SDNT]
DISMERCOOP (a.k.a. COOPERATIVA MULTIACTIVA DE EMPLEADOS DE

SUPERMERCADOS Y AFINES; f.k.a. DISTRIBUIDORA MIGIL BOGOTA LTDA.; f.k.a. DISTRIBUIDORA MIGIL CALI S.A.; f.k.a. DISTRIBUIDORA MIGIL LTDA.; f.k.a. GRACADAL S.A.; f.k.a. MIGIL), Carrera 26 No. 5B–65, Cali, Colombia; Carrera 30 No. 5–12, Cali, Colombia; Calle 5C No. 41–30, Cali, Colombia; NIT # 805003637–5 (Colombia) [SDNT]

DISTRIBUCIONES GLOMIL LTDA. (a.k.a. AUTOSERVICIO CIUDAD JARDIN; a.k.a. AUTOSERVICIO PENON), Carrera 105 No. 15A–53, Cali, Colombia; Avenida Colombia No. 2–45, Cali, Colombia; Carrera 2 Oeste No. 2–54 ap. 201, Cali, Colombia; NIT # 805008233–6 (Colombia) [SDNT]

DISTRIBUIDOR AUTORIZADO TEQUILA 4 REYES, S. DE R.L., Tijuana, Baja California, Mexico [SDNTK]

DISTRIBUIDORA AGROPECUARIA COLOMBIANA S.A. (a.k.a. DIAGROCOL S.A.), Avenida 3 Bis Norte No. 23C–69, Cali, Colombia; NIT # 805011649–7 (Colombia) [SDNT]

DISTRIBUIDORA DE DROGAS CONDOR LTDA. (a.k.a. CONDOR), Calle 68 52–05, Bogota, Colombia; Calle 10 No. 32A–64, Bogota, Colombia [SDNT]

DISTRIBUIDORA DE DROGAS LA REBAJA S.A. (a.k.a. DISTRIBUIDORA DE DROGAS LA REBAJA PRINCIPAL S.A.; a.k.a. DROGAS LA REBAJA), Carrera 7A 14–25 piso 2, Cali, Colombia; Carrera 99 No. 46 A–10 Blg 6 y 8, Bogota, Colombia; Calle 18 121–130, Cali, Colombia; Calle 14 6–66, Cali, Colombia; Carrera 7 13–132 piso 4, Cali, Colombia; Calle 10 No. 4–47 Piso 19, Cali, Colombia; Carrera 10 11–71, Cali, Colombia [SDNT]

DISTRIBUIDORA DE ELEMENTOS PARA LA CONSTRUCCION S.A. (a.k.a. D'ELCON S.A.), Carrera 23D No. 13B–59, Cali, Colombia; NIT # 800117780–2 (Colombia) [SDNT]

DISTRIBUIDORA DE HERMOSILLO GAXIOLA HERMANOS S.A. DE C.V. (a.k.a. MADYVA), Blvd. Luis Encinas 581, Esquina Alberto Truqui, Colonia Pimentel, Hermosillo, Sonora, Mexico; Fco. Eusebio Kino 177–7, Col. 5 de Mayo, Hermosillo, Sonora 83010, Mexico; Guadalajara, Jalisco, Mexico; R.F.C. DHG900717NV3 (Mexico) [SDNTK]

DISTRIBUIDORA DE MEDICAMENTOS DISFOGEN LTDA. (a.k.a. DISFOGEN LTDA.), Carrera 42C No. 22C–36, Bogota, Colombia; Calle 13 No. 27–39 Int. 4, Bogota, Colombia; NIT # 830116941–6 (Colombia) [SDNT]

DISTRIBUIDORA DEL VALLE E.U., Calle, 18 No. 106–98 of. 303, Cali, Colombia; Diag., 23 Tr. 10–99, Cali, Colombia; NIT # 805007212–7 (Colombia) [SDNT]

DISTRIBUIDORA GRAN AUTO S.A. DE C.V., Hermosillo, Sonora, Mexico; R.F.C. DGA960531NUA (Mexico) [SDNTK]

DISTRIBUIDORA IMPERIAL DE BAJA CALIFORNIA, S.A. DE C.V. (a.k.a. DIBC; a.k.a. DISTRIBUIDORA IMPERIAL), Avenida Rio Nazas 10202, Tijuana, Baja California, Mexico; Heroes de Nacozari 3213 Colonia Maya, Culiacan, Sinaloa, Mexico; Ramon Morales No. 732 Colonia El Mirador, Guadalajara, Jalisco, Mexico; Rio Balsas 1579 Los Nogales, Ciudad Juarez, Chihuahua, Mexico; Blvd. Agua Caliente 1381, Colonia Revolucion, Tijuana, Baja California, Mexico; Lerdo de Tejada 1879 Sector Juarez, Guadalajara, Jalisco, Mexico; Luz Savinon 718-C Colonia del Valle, Mexico City, Distrito Federal, Mexico; P.O. Box 434440, San Ysidro, CA 92173; R.F.C. DIB–771110-HQ1 (Mexico) [SDNTK]

DISTRIBUIDORA MIGIL LTDA. (f.k.a. DISTRIBUIDORA MIGIL BOGOTA LTDA.; a.k.a. DISTRIBUIDORA MIGIL CALI S.A.; a.k.a. MIGIL), Carrera 26 5B–65, Cali, Colombia; Calle 5C 41–30, Cali, Colombia; Carrera 30–5–12, Cali, Colombia [SDNT]

DISTRIBUIDORA MYRAMIREZ S.A., Calle 33BN No. 2BN–49 apt. 503A, Cali, Colombia; Carrera 69A No. 49A–49, Bogota, Colombia [SDNT]

DISTRIBUIDORA SANAR DE COLOMBIA S.A., Carrera 3 No. 11–32 of. 939, Cali, Colombia; Carrera 13A No. 89–38, of. 713, Bogota, Colombia; Calle 18 No. 106–98 of. 206, 207, 302 and 303, Cali, Colombia; NIT # 805011728–0 (Colombia) [SDNT]

DISTRIEXPORT COMERCIALIZADORA INTERNACIONAL S.A. (a.k.a. DISTRIEXPORT C.I. S.A.; a.k.a. DISTRIEXPORT S.A.), Carrera 70 No. 54–30, Bogota, Colombia; Carrera 28 No. 11–65 of. 712, Bogota, Colombia; Calle 12B No. 27–40, Int. 4 of., Bogota, Colombia; Carrera 12 No. 71–53 of. 502, Bogota, Colombia; Calle 12B No. 27–39, Bogota, Colombia; NIT # 830047057–3 (Colombia) [SDNT]

DIVINE HOMES (a.k.a. DIVINE HOMES (PVT) LTD), 12 Meredith Drive, Eastlea, Harare, Zimbabwe; 31 Kensington, Highlands, Harare, Zimbabwe; Shop # 6, Hillside Shopping Center, Harare, Zimbabwe [ZIMBABWE]

DIZRIVER Y CIA. S. EN C., Carrera 68B No. 78–24 Unidad 23 Interior 5 Apartamento 402, Bogota, Colombia; NIT # 900013642–1 (Colombia) [SDNTK]

DJERMANE, Kamel (a.k.a. ''ADEL''; a.k.a. ''BILAL''; a.k.a. ''FODHIL''); DOB 1965; POB Oum el Bouaghi, Algeria; nationality Algeria (individual) [SDGT]

DJOGO, Jovan; POB Kalinovik, Bosnia-Herzegovina (individual) [BALKANS]

DJORDA, Samojko; DOB 13 Jun 1959; POB Sarajevo, Bosnia-Herzegovina (individual) [BALKANS]

DJORDJEVIC, Vlastimir (a.k.a. DORDEVIC, Vlastimir); DOB 1948; POB Koznica, Vladicin Han municipality (individual) [BALKANS]

DJOUADI, Yahia (a.k.a. ABU AMAR, Yahia; a.k.a. ''ABOU ALAM''; a.k.a. ''ABU ALA''); DOB 1 Jan 1967; POB M'Hamid, Sidi Bel Abbas, Algeria (individual) [SDGT]

DJUE, Eugene Ngoran Kouadio; DOB 20 Dec 1969; alt. DOB 1 Jan 1966; POB Akakro, Cote d'Ivoire; Leader of Union for the Total Liberation of Cote d'Ivoire (Union pour la Liberation Totale de la Cote d'Ivoire, UPLTCI) (individual) [COTED]

DOCKRAT, Farhad Ahmed (a.k.a. DOCKRAT, Ahmed; a.k.a. DOCKRAT, Farhaad; a.k.a. DOCKRAT, Farhaad Ahmed; a.k.a. DOCKRAT, Farhad; a.k.a. DOCKRAT, Farhad Ahmad; a.k.a. DOCKRAT, Maulana Farhad; a.k.a. DOCRATE, Farhad; a.k.a. ''DOCKRAT, F.''), 386 Swanepoel Street, Erasmia, Pretoria, South Africa; DOB 28 Feb 1959; POB Pretoria, South Africa; nationality South Africa; National ID No. 5902285162089/055 (South Africa); Passport 446333407 (South Africa) expires 26 May 2014 (individual) [SDGT]

DOCKRAT, Junaid Ismail (a.k.a. DOCKRAT, Junaid; a.k.a. DOCRATE, Junaid; a.k.a. ''AHMED, DR.''; a.k.a. ''DOCKRAT, J. I.''), Johannesburg, South Africa; P.O. Box 42928, Fordsburg 2033, South Africa; 71 Fifth Avenue, Mayfair 2108, South Africa; DOB 16 Mar 1971; National ID No. 7103165178083 (South Africa) (individual) [SDGT]

DOMINGUEZ GARIBELLO, Freddy Orlando (a.k.a. DOMINGUEZ GARIVELLO, Freddy Orlando), c/o INDUSTRIA AVICOLA PALMASECA S.A., Cali, Colombia; DOB 25 Apr 1960; Cedula No. 16659634 (Colombia) (individual) [SDNT]

DOMINGUEZ HERNANDEZ, Fernando Antonio, c/o DISMERCOOP, Cali, Colombia; DOB 7 Aug 1964; Cedula No. 16701778 (Colombia) (individual) [SDNT]

DOMINGUEZ, Carlos, Vinales Tours, Oaxaca 80, Roma, Mexico, D.F., Mexico (individual) [CUBA]

DOMINION INTERNATIONAL, United Kingdom [IRAQ2]

DONO MORALES, Edman Manuel, c/o GS PLUS CONSULTORES, S.A. DE C.V., Tijuana, Baja California, Mexico; Privada Niza 3617 Int. 2, Colonia Playas de Tijuana, Tijuana, Baja California, Mexico; c/o GRUPO GAMAL, S.A. DE C.V., Guadalajara, Jalisco, Mexico; DOB 20 Jul 1966; POB Guadalajara, Jalisco, Mexico (individual) [SDNTK]

DOOLEY, Michael P., Panama (individual) [CUBA]

DOSEN, Damir; DOB 7 Apr 1967; POB Cirkin Polje, Bosnia-Herzegovina; ICTY indictee (individual) [BALKANS]

DOXA S.A., Carrera 16 No. 13–31, La Union, Valle, Colombia; NIT # 821002801–0 (Colombia) [SDNT]

DRAGADOS Y MUELLES GAVIOTA LTDA., Km. 5 Carretera Simon Bolivar, Buenaventura, Colombia; NIT # 800173053–4 (Colombia) [SDNT]

DREAMLAND (a.k.a. IRAN DREAMLAND); Vessel Registration Identification IMO 8320183 (vessel) [NPWMD]

DRIFTER (a.k.a. IRAN DRIFTER); Vessel Registration Identification IMO 8320169 (vessel) [NPWMD]

DRISSI, Noureddine Ben Ali Ben Belkassem, Via Plebiscito 3, Cremona, Italy; DOB 30 Apr 1969; alt. DOB 30 Apr 1964; POB Tunisi, Tunisia; nationality Tunisia; Passport L851940 issued 9 Sep 1998 expires 8 Sep 2003; arrested 1 Apr 2003 (individual) [SDGT]

DROCARD S.A., Transversal 29 No. 39–92, Bogota, Colombia; Calle 39 Bis A No. 27–16, Bogota, Colombia; NIT # 830059716–0 (Colombia) [SDNT]

DROGAS LA REBAJA BARRANQUILLA S.A., Local Cerete, Barranquilla, Colombia; Local de Riohacha, Barranquilla, Colombia; Avenida Pedro Heredia, Barranquilla, Colombia [SDNT]

DROGAS LA REBAJA BUCARAMANGA S.A., Local No. 7, Cucuta, Colombia; Local No. 9, Cucuta, Colombia; Local 201, Valledupar, Colombia; Local No. 1, Cucuta, Colombia; Local No. 6, Cucuta, Colombia; Local No. 1, Bucaramanga, Colombia; Local No. 2, Cucuta, Colombia [SDNT]

DROGAS LA REBAJA CALI S.A., Barrio Siloe, Cali, Colombia; Santander de Quilichao, Cali, Colombia; Local del Poblado No. 17, Cali, Colombia; Calle 3 #4–02 B/Ventura, Cali, Colombia; Local Comuneros No. 20, Cali, Colombia; Calle 13 #6–85, Cali, Colombia [SDNT]
DROGAS LA REBAJA NEIVA S.A., Neiva, Colombia [SDNT]
DROGAS LA REBAJA PASTO S.A., Calle 18 #26–40, Pasto, Colombia; Local No. 6, Pasto, Colombia; Local No. 13, Puerto Asis, Colombia [SDNT]
DROGAS LA REBAJA PEREIRA S.A., Local Cajamarca, Pereira, Colombia; Local Dos Quebradas, Pereira, Colombia; Local Santa Rosa de Cabal, Pereira, Colombia; Local la Virginia, Pereira, Colombia [SDNT]
DROMARCA Y CIA. S.C.S., Calle 12B No. 28–58, Bogota, Colombia; Calle 39 Bis A No. 27–169, Bogota, Colombia; NIT # 800225556–1 (Colombia) [SDNT]
DROUKDEL, Abdelmalek (a.k.a. ABD AL-WADOUB, Abdou Moussa; a.k.a. ABD EL OUADOUD, Abou Mossab; a.k.a. ABD EL OUADOUD, Abou Mousab; a.k.a. ABD EL-OUADOUD, Abi Mossaab; a.k.a. ABD-AL-WADUD, Abu-Mus'ab; a.k.a. ABDEL EL-WADOUD, Abu Mossaab; a.k.a. ABDEL WADOUD, Abou Mossab; a.k.a. ABDEL WADOUD, Abou Moussaab; a.k.a. ABDELMALEK, Drokdal; a.k.a. ABDELMALEK, Droukdal; a.k.a. ABDELMALEK, Droukdel; a.k.a. ABDELOUADODUD, Abu Mussaab; a.k.a. ABDELOUADOUD, Abi Mousaab; a.k.a. ABDELOUADOUD, Abou Mossaab; a.k.a. ABDELOUADOUD, Abou Mossab; a.k.a. ABDELOUADOUD, Abou Mousaab; a.k.a. ABDELOUADOUD, Abou Moussab; a.k.a. ABDELOUADOUD, Abou Musab; a.k.a. ABDELOUADOUD, Abu Mossab; a.k.a. ABDELOUADOUD, Abu Mus'ab; a.k.a. ABDELOUADOUDE, Abou Moussaab; a.k.a. ABDELOUDOUD, Abu Musab; a.k.a. ABDELWADOUD, Abou Mossab; a.k.a. ABKELWADOUD, Abou Mosaab; a.k.a. ABOU MOSSAAB, Abdelwadoud; a.k.a. ABOU MOSSAAH, Abdelouadoud; a.k.a. ABOU MOSSAB, Abdelouadoud; a.k.a. ABU MUSAB, Abdelwadoud; a.k.a. DARDAKIL, Abdelmalek; a.k.a. DERDOUKAL, Abdelmalek; a.k.a. DEROUDEL, Abdel Malek; a.k.a. DOURKDAL, Abdelmalek; a.k.a. DRIDQAL, Abd-al-Malik; a.k.a. DROKDAL, 'Abd-al-Malik; a.k.a. DROKDAL, Abdelmalek; a.k.a. DROUGDEL, Abdelmalek; a.k.a. DROUKADAL, Abdelmalek; a.k.a. DROUKBEL, Abdelmalek; a.k.a. DROUKDAL, Abdelmalek; a.k.a. DROUKDAL, Abdelmalik; a.k.a. DROUKDEL, Abdel Malek; a.k.a. DROUKDEL, Abdelouadour; a.k.a. DRUKDAL, 'Abd al-Malik; a.k.a. DURIKDAL, 'Abd al-Malik; a.k.a. OUDOUD, Abu Musab; a.k.a. ''ABDELWADOUD, Abou''), Meftah, Algeria; DOB 20 Apr 1970; POB Meftah, Algeria; alt. POB Khemis El Khechna, Algeria; nationality Algeria (individual) [SDGT]
DUARTE FAJARDO, Maria del Carmen, c/o MAGEN LTDA., Bogota, Colombia; DOB 12 Oct 1975; Cedula No. 63436645 (Colombia); Passport 63436645 (Colombia) (individual) [SDNT]
DUARTE MUNOZ, Roque (a.k.a. CAMPOS ARREDONDO, Humberto), c/o COMPANIA MINERA DEL RIO CIANURY S.A. DE C.V., Culiacan, Sinaloa, Mexico; DOB 09 Dec 1960; POB Mexico (individual) [SDNTK]
DUBAI TRADING COMPANY, 44–45, Royal Shopping Plaza, Industrial Estate, Hayatabad, Peshawar, Pakistan; 53 Royal Shopping Plaza, Industrial Estate, Hayatabad, Peshawar, Pakistan [SDNTK]
DUIKER FLATS FARM, Zimbabwe [ZIMBABWE]
DUMONT, Lionel (a.k.a. BROUGERE, Jacques; a.k.a. BRUGERE, Jacques; a.k.a. ''ABOU HAMZA''; a.k.a. ''ABOU HANZA''; a.k.a. ''ABU KHAMZA''; a.k.a. ''BILAL''; a.k.a. ''BILAL KUMKAL''; a.k.a. ''HAMZA''; a.k.a. ''KOUMAL''; a.k.a. ''LAJONEL DIMON''); DOB 21 Jan 1971; alt. DOB 29 Jan 1975; alt. DOB 19 Jan 1971; POB Roubaix, France (individual) [SDGT]
DUNBAR, Belle Y.; DOB 27 OCT 1967; alt. DOB 27 OCT 1963; Former Managing Director, Liberian Petroleum Refining Company (individual) [LIBERIA]
DUNBAR, Jenkins; DOB 10 JAN 1947; Former Minister of Lands, Mines, Energy of Liberia (individual) [LIBERIA]
DUQUE BOTERO, Jorge Alirio, Calle 5 No. 5A–49, Buenaventura, Colombia; c/o INDUSTRIA DE PESCA SOBRE EL PACIFICO S.A., Buenaventura, Colombia; DOB 4 Jun 1949; Cedula No. 6160843 (Colombia) (individual) [SDNT]
DUQUE CORREA, Francisco Javier, c/o CORPORACION DE ALMACENES POR DEPARTAMENTOS S.A., Bogota, Colombia; c/o ALMACAES S.A., Bogota, Colombia; c/o G.L.G. S.A., Bogota, Colombia; c/o RAMAL S.A., Bogota, Colombia; DOB 04 Apr 1948; POB Medellin, Colombia; Cedula No. 8292581 (Colombia); Passport P009253 (Colombia) (individual) [SDNT]
DUQUE GAVIRIA, Ivan Roberto (a.k.a. ''ERNESTO BAEZ''); DOB 9 May 1955; POB Aguadas, Caldas, Colombia; Cedula No. 10241940 (Colombia) (individual) [SDNTK]
DUQUE JARAMILLO, German, c/o APOYOS DIAGNOSTICOS S.A., Tulua, Valle, Colombia; DOB 20 Apr 1951; POB Tulua, Valle, Colombia; citizen Colombia; nationality Colombia; Cedula No. 14972076 (Colombia) (individual) [SDNT]
DUQUE MARTINEZ, Diego Fernando, c/o GENERICOS ESPECIALES S.A., Bogota, Colombia; DOB 31 Jan 1972; Cedula No. 8191760 (Colombia); Passport 8191760 (Colombia) (individual) [SDNT]
DUQUE MARTINEZ, Maria Consuelo (a.k.a. DUQUE DE GIRALDO, Maria Consuelo), c/o LABORATORIOS KRESSFOR DE COLOMBIA S.A., Bogota, Colombia; c/o FARMACOOP, Bogota, Colombia; DOB 19 May 1955; Cedula No. 41716296 (Colombia) (individual) [SDNT]
DUQUE, Carlos Jaen, Panama (individual) [CUBA]
DURAN DAZA, Diego, c/o COPSERVIR LTDA., Bogota, Colombia; c/o PROSALUD S.A. Y BIENESTAR S.A., Cali, Colombia; DOB 25 Oct 1958; Cedula No. 16260356 (Colombia); Passport 16260356 (Colombia) (individual) [SDNT]
DURAN RAMIREZ, Pompilio, c/o AGRICOLA DOIMA DEL NORTE DEL VALLE LTDA., Cartago, Valle, Colombia; c/o GANADERIAS BILBAO LTDA., Cartago, Valle, Colombia; c/o INMOBILIARIA EL ESCORIAL LTDA., Cartago, Valle, Colombia; c/o INMOBILIARIA PASADENA LTDA., Cartago, Valle, Colombia; c/o GANADERIA EL VERGEL LTDA., Cartago, Valle, Colombia; c/o ORGANIZACION LUIS HERNANDO GOMEZ BUSTAMANTE Y CIA. S.C.S., Cartago, Valle, Colombia; c/o INMOBILIARIA LINARES LTDA., Cartago, Valle, Colombia; Carrera 4 No. 12–20 of. 206, Cartago, Valle, Colombia; c/o VISCAYA LTDA., Cartago, Valle, Colombia; Cedula No. 2534945 (Colombia); Passport 2534945 (Colombia) (individual) [SDNT]
DURAND PROPERTIES LIMITED, Haven Court, 5 Library Ramp, Gibraltar, United Kingdom [IRAQ2]
DURATEX S.A. (f.k.a. INVERSIONES JEDA S.A.), Calle 116 No. 19–22, Bogota, Colombia; Carrera 63 No. 17–07, Bogota, Colombia; Avenida 19 No. 95–13 Local 1, Bogota, Colombia; NIT # 800054668–3 (Colombia) [SDNT]
DURGACO, London, United Kingdom [CUBA]
DURGUTI, Safet (a.k.a. ''ABU-SUMAYA''); DOB 10 May 1967; POB Orahovac, Kosovo; Bosnian Personal ID No. 1005967953038; Passport 1144602 (Bosnia and Herzegovina) (individual) [SDGT]
DUTY FREE SHOPS CORPORATION, P.O. Box 1789, Khartoum, Sudan [SUDAN]
DUZCAN, Ceylan, United Arab Emirates; DOB 01 Mar 1975; POB Savsat, Turkey; citizen Turkey; Driver's License No. 11550 (Turkey); Passport 315408 (Turkey) (individual) [SDNTK]
DWIKARNA, Agus; DOB 11 Aug 1964; POB Makassar, South Sulawesi, Indonesia; nationality Indonesia; currently incarcerated in the Philippines (individual) [SDGT]
DYNAMIZE (a.k.a. IRAN DYNAMIZE); Vessel Registration Identification IMO 8309634 (vessel) [NPWMD]
EAGLE COMMUNICATION BROKERS INC., Panama City, Panama [SDNT]
EAST ISLAND SHIPPING CO. LTD., c/o EMPRESA DE NAVEGACION MAMBISA, Apartado 543, San Ignacio 104, Havana, Cuba [CUBA]
EAST ISLANDS (vessel) [CUBA]
EASTERN TURKISTAN ISLAMIC MOVEMENT (a.k.a. EASTERN TURKISTAN ISLAMIC PARTY; a.k.a. ETIM; a.k.a. ETIP) [SDGT]
ECHEBERRIA SIMARRO, Leire; DOB 20 Dec 1977; POB Basauri (Vizcaya Province), Spain; D.N.I. 45.625.646; member ETA (individual) [SDGT]
ECHEGARAY ACHIRICA, Alfonso; DOB 10 Jan 1958; POB Plencia (Vizcaya Province), Spain; D.N.I. 16.027.051; member ETA (individual) [SDGT]
ECHEVERRI, German, Panama (individual) [CUBA]
ECHEVERRY HERRERA, Hernando (a.k.a. ECHEVERRI HERRERA, Hernando), c/o INDUSTRIA DE PESCA SOBRE EL PACIFICO S.A., Buenaventura, Colombia; Cedula No. 1625525 (Colombia) (individual) [SDNT]
ECHEVERRY TRUJILLO, Oscar Alberto, c/o M.O.C. ECHEVERRY HERMANOS LTDA.,

Cali, Colombia; c/o COLOR 89.5 FM STEREO, Cali, Colombia; Avenida 4N No. 17–23 piso 1, Cali, Colombia; Calle 43N No. 4–05, Cali, Colombia; DOB 21 Oct 1964; Cedula No. 16272989 (Colombia) (individual) [SDNT]

ECHO DELTA HOLDINGS LTD, Newboudary House, London Road, Sunningdale, Ascot, Berkshire SL5 0DJ, United Kingdom; Thetford Farm, P.O. Box HP86, Mount Pleasant, Harare, Zimbabwe; Hurst Grove, Sandford Lane, Hurst, Reading, Berkshire RG10 0SQ, United Kingdom [ZIMBABWE]

ECIM, Ljuban; DOB 6 Jan 1964; POB Sviljanac, Bosnia-Herzegovina; National ID No. 601964100083 (Bosnia and Herzegovina) (individual) [BALKANS]

EDBI EXCHANGE COMPANY, Tehran, Iran [NPWMD]

EDBI STOCK BROKERAGE COMPANY, Tehran, Iran [NPWMD]

EDICIONES CUBANAS, Spain [CUBA]

EDIFICACIONES DEL CARIBE LTDA. (a.k.a. EDIFICAR), Calle 74 No. 53–30, Barranquilla, Colombia; NIT # 890108103–5 (Colombia) [SDNT]

EDITORA TRANSPARENCIA S.A., Jr. Bolognesi 125, Dpto. 301, Lima, Peru; RUC # 20508146885 (Peru) [SDNTK]

EDYJU, S.A., Panama [CUBA]

EGGLETON, Wilfred, Baja California 255, Edificio B., Oficina 103, Condesa 06500, Mexico, D.F., Mexico; Director General, Cubanatur (individual) [CUBA]

EIRIN FARM, Marondera, Zimbabwe [ZIMBABWE]

EL AYASHI, Radi Abd El Samie Abou El Yazid (a.k.a. ''MERA'I''), Via Cilea 40, Milan, Italy; DOB 2 Jan 1972; POB El Gharbia, Egypt; nationality Egypt; arrested 31 Mar 2003 (individual) [SDGT]

EL BOUHALI, Ahmed (a.k.a. ABU KATADA), vicolo S. Rocco, n. 10—Casalbuttano, Cremona, Italy; DOB 31 May 1963; POB Sidi Kacem, Morocco; nationality Morocco; Italian Fiscal Code LBHHMD63E31Z330M (individual) [SDGT]

EL GEZIRA AUTOMOBILE COMPANY (a.k.a. GEZIRA AUTOMOBILE COMPANY), P.O. Box 232, Khartoum, Sudan [SUDAN]

EL HABHAB, Redouane (a.k.a. ''ABDELRAHMAN''), Iltisstrasse 58, Kiel 24143, Germany; DOB 20 Dec 1969; POB Casablanca, Morocco; nationality Germany; National ID No. 1007850441 (Germany) issued 27 Mar 2001 expires 26 Mar 2011; Passport 1005552350 (Germany) issued 27 Mar 2001 expires 26 Mar 2011; currently incarcerated in Lubeck, Germany (individual) [SDGT]

EL HADI, Mustapha Nasri Ben Abdul Kader Ait; DOB 5 Mar 1962; POB Tunis, Tunisia; nationality Algeria; alt. nationality Germany (individual) [SDGT]

EL HASSAN, Gaffar Mohmed (a.k.a. ''EL HASSAN, Gaffar Mohamed''); DOB 24 Jun 1952; POB Khartoum, Sudan; Major General for the Sudan Armed Forces (individual) [DARFUR]

EL HEIT, Ali (a.k.a. KAMEL, Mohamed; a.k.a. ''ALI DI ROMA''), Via D. Fringuello, 20, Rome, Italy; Milan, Italy; DOB 20 Mar 1970; alt. DOB 30 Jan 1971; POB Rouba, Algeria (individual) [SDGT]

EL MAHFOUDI, Mohamed, via Puglia, n. 22, Gallarate, Varese, Italy; DOB 24 Sep 1964; POB Agadir, Morocco; Italian Fiscal Code LMHMMD64P24Z330F; Residence, Agadir, Morocco (individual) [SDGT]

EL MOTASSADEQ, Mounir, Goschenstasse 13, Hamburg 21073, Germany; DOB 3 Apr 1974; POB Marrakesh, Morocco; nationality Morocco (individual) [SDGT]

EL NILEIN BANK (n.k.a. EL NILEIN INDUSTRIAL DEVELOPMENT BANK (SUDAN); n.k.a. EL NILEIN INDUSTRIAL DEVELOPMENT BANK GROUP; n.k.a. NILEIN INDUSTRIAL DEVELOPMENT BANK (SUDAN)), Parliament Street, P.O. Box 466, Khartoum, Sudan; P.O. Box 6013, Abu Dhabi City, United Arab Emirates; P.O. Box 466/1722, United Nations Square, Khartoum, Sudan [SUDAN]

EL TAKA AUTOMOBILE COMPANY (a.k.a. TAKA AUTOMOBILE COMPANY), P.O. Box 221, Khartoum, Sudan [SUDAN]

EL-AICH, Dhou (a.k.a. ''ABDEL HAK''); DOB 5 Aug 1964; POB Debila, Algeria (individual) [SDGT]

ELCORO AYASTUY, Paulo; DOB 22 Oct 1973; POB Vergara, Guipuzcoa Province, Spain; D.N.I. 15.394.062 (Spain); Member ETA (individual) [SDGT]

ELECTRONICS INSTITUTE, P.O. Box 4470, Damascus, Syria [NPWMD]

ELEHSSAN (a.k.a. AL-AHSAN CHARITABLE ORGANIZATION; a.k.a. AL-BAR AND AL-IHSAN SOCIETIES; a.k.a. AL-BAR AND AL-IHSAN SOCIETY; a.k.a. AL-BIR AND AL-IHSAN ORGANIZATION; a.k.a. AL-BIRR WA AL-IHSAN CHARITY ASSOCIATION; a.k.a. AL-BIRR WA AL-IHSAN WA AL-NAQA; a.k.a. AL-IHSAN CHARITABLE SOCIETY; a.k.a. BIR WA ELEHSSAN SOCIETY; a.k.a. BIRR AND ELEHSSAN SOCIETY; a.k.a. ELEHSSAN SOCIETY; a.k.a. ELEHSSAN SOCIETY AND BIRR; a.k.a. ELEHSSAN SOCIETY WA BIRR; a.k.a. IHSAN CHARITY; a.k.a. JAMI'A AL-AHSAN AL-KHAYRIYYAH; a.k.a. THE BENEVOLENT CHARITABLE ORGANIZATION), Bethlehem, West Bank, Palestinian; AL-MUZANNAR ST, AL-NASIR AREA, Gaza City, Gaza, Palestinian; Lebanon; Ramallah, West Bank, Palestinian; Tulkarm, West Bank, Palestinian; P.O. BOX 398, Hebron, West Bank, Palestinian; Jenin, West Bank, Palestinian [SDGT]

ELEVENTH OCEAN; Vessel Registration Identification IMO 9209324 (vessel) [NPWMD]

EL-HOORIE, Ali Saed Bin Ali (a.k.a. AL-HOURI, Ali Saed Bin Ali; a.k.a. EL-HOURI, Ali Saed Bin Ali); DOB 10 Jul 1965; alt. DOB 11 Jul 1965; POB El Dibabiya, Saudi Arabia; citizen Saudi Arabia (individual) [SDGT]

ELIZABETH OVERSEAS INC., Panama City, Panama; C.R. No. 194798/21722 (Panama); RUC # 2172202194798 (Panama) [SDNT]

ELMABRUK, Maftah Mohamed (a.k.a. AL MABROOK, Muftah; a.k.a. AL-FATHALI, Al-Mabruk; a.k.a. AL-FATHALI, Al-Mabruk Muftah Muhammad; a.k.a. EL MABRUK, Muftah; a.k.a. EL MOBRUK, Maftah; a.k.a. ELMABRUK, Mustah; a.k.a. MAFTAH, Elmobruk; a.k.a. ''AL HAK, Al Haj Abd''; a.k.a. ''AL HAQQ, Al Hajj Abd''; a.k.a. ''AL-HAQ, Haj 'Abd''; a.k.a. ''AL-HAQQ, Al-Hajj 'Abd''), undetermined; DOB 1 May 1950; POB Libya; nationality Libya (individual) [SDGT]

ELOSTA, Abdelrazag Elsharif (a.k.a. ABU MU'AWIYA; a.k.a. AL USTA, Abdelrazag Elsharif; a.k.a. AL-MULAY, 'Abd; a.k.a. AL-USTA, 'Abd Al-Razzaq Al-Sharif; a.k.a. SHARIF, 'Abd al-Razzaq), undetermined; DOB 20 Jun 1963; POB SOGUMA, LIBYA; nationality United Kingdom (individual) [SDGT]

ELSHANI, Gafur; DOB 29 Mar 1958; POB Suva Reka, Serbia and Montenegro (individual) [BALKANS]

EMERALD ISLANDS (vessel) [CUBA]

EMIRATES AND SUDAN INVESTMENT COMPANY LIMITED, Port Sudan, Sudan; P.O. Box 7036, Khartoum, Sudan [SUDAN]

EMPRESA CUBANA DE AVIACION (a.k.a. CUBANA AIRLINES), Frankfurter TOR 8-A, Berlin, Germany [CUBA]

EMPRESA CUBANA DE AVIACION (a.k.a. CUBANA AIRLINES), Calle 29 y Avda Justo Arosemena, Panama City, Panama [CUBA]

EMPRESA CUBANA DE AVIACION (a.k.a. CUBANA AIRLINES), Grantley Adams Airport, Christ Church, Barbados [CUBA]

EMPRESA CUBANA DE AVIACION (a.k.a. CUBANA AIRLINES), Corrientes 545 Primer Piso, Buenos Aires, Argentina [CUBA]

EMPRESA CUBANA DE AVIACION (a.k.a. CUBANA AIRLINES), 24 Rue Du Quatre Septembre, Paris, France [CUBA]

EMPRESA CUBANA DE AVIACION (a.k.a. CUBANA AIRLINES), Belas Airport, Luanda, Angola [CUBA]

EMPRESA CUBANA DE AVIACION (a.k.a. CUBANA AIRLINES), Dobrininskaya No. 7, Sec 5, Moscow, Russia [CUBA]

EMPRESA CUBANA DE AVIACION (a.k.a. CUBANA AIRLINES), Norman Manley International Airport, Kingston, Jamaica [CUBA]

EMPRESA CUBANA DE AVIACION (a.k.a. CUBANA AIRLINES), 1 Place Ville Marie, Suite 3431, Montreal, Canada [CUBA]

EMPRESA CUBANA DE AVIACION (a.k.a. CUBANA AIRLINES), Parizska 17, Prague, Czech Republic [CUBA]

EMPRESA CUBANA DE AVIACION (a.k.a. CUBANA AIRLINES), 32 Main Street, Georgetown, Guyana [CUBA]

EMPRESA CUBANA DE AVIACION (a.k.a. CUBANA AIRLINES), Piarco Airport, Port au Prince, Haiti [CUBA]

EMPRESA CUBANA DE AVIACION (a.k.a. CUBANA AIRLINES), c/o Anglo-Caribbean Shipping Co. Ltd., Ibex House, The Minories, London EC3N 1DY, United Kingdom [CUBA]

EMPRESA CUBANA DE AVIACION (a.k.a. CUBANA AIRLINES), Melchor Ocampo 469, 5DF Mexico City, Mexico [CUBA]

EMPRESA CUBANA DE AVIACION (a.k.a. CUBANA AIRLINES), Madrid, Spain [CUBA]

EMPRESA CUBANA DE AVIACION (a.k.a. CUBANA AIRLINES), Paseo de la Republica 126, Lima, Peru [CUBA]

EMPRESA CUBANA DE PESCADOS Y MARISCOS (a.k.a. CARIBBEAN EXPORT ENTERPRISE; a.k.a. CARIBEX), Paris, France [CUBA]

EMPRESA CUBANA DE PESCADOS Y MARISCOS (a.k.a. CARIBBEAN EXPORT ENTERPRISE; a.k.a. CARIBEX), Madrid, Spain [CUBA]

EMPRESA CUBANA DE PESCADOS Y MARISCOS (a.k.a. CARIBBEAN EXPORT ENTERPRISE; a.k.a. CARIBEX), Tokyo, Japan [CUBA]
EMPRESA CUBANA DE PESCADOS Y MARISCOS (a.k.a. CARIBBEAN EXPORT ENTERPRISE; a.k.a. CARIBEX), Cologne, Germany [CUBA]
EMPRESA CUBANA DE PESCADOS Y MARISCOS (a.k.a. CARIBBEAN EXPORT ENTERPRISE; a.k.a. CARIBEX), Downsview, Ontario, Canada [CUBA]
EMPRESA CUBANA DE PESCADOS Y MARISCOS (a.k.a. CARIBBEAN EXPORT ENTERPRISE; a.k.a. CARIBEX), Milan, Italy [CUBA]
EMPRESA CUBANA DE PESCADOS Y MARISCOS (a.k.a. CARIBBEAN EXPORT ENTERPRISE; a.k.a. CARIBEX), Moscow, Russia [CUBA]
EMPRESA DE TRANSPORTES CHULUCANAS 2000 S.A., Jr. Augusto Gonzales, Olaechea 1311, Urb. Elio, Lima, Peru; RUC # 20458820989 (Peru) [SDNTK]
EMPRESA DE TURISMO NACIONAL Y INTERNACIONAL (a.k.a. CUBATUR), Buenos Aires, Argentina [CUBA]
EMPRESA EDITORA CONTINENTE PRESS S.A., Avenida Javier Prado, Oeste 640, Lima, Peru; RUC # 20381427391 (Peru) [SDNTK]
ENDSHIRE EXPORT MARKETING, United Kingdom [IRAQ2]
ENGINEERING EQUIPMENT COMPANY, C/O ENGINEERING EQUIPMENT CORPORATION, P.O. Box 97, Khartoum, Sudan [SUDAN]
ENGINEERING EQUIPMENT CORPORATION, P.O. Box 97, Khartoum, Sudan [SUDAN]
ENSAMBLADORA COLOMBIANA AUTOMOTRIZ S.A. (a.k.a. E.C.A. S.A.), Carrera 39 No. 43–75, Barranquilla, Colombia; NIT # 817000791–1 (Colombia) [SDNT]
ENTREGA DE CORRESPONDENCIA OPORTUNA, S.A. DE C.V., Madero 941 21 A, Entre Carrillo Puerto y Diaz Miron, Zona Central, Tijuana, Baja California, Mexico; R.F.C. ECO–990920–7H6 (Mexico) [SDNTK]
EPAMAC SHIPPING CO. LTD., c/o EMPRESA DE NAVEGACION MAMBISA, Apartado 543, San Ignacio 104, Havana, Cuba [CUBA]
ES SAYED, Abdelkader Mahmoud (a.k.a. ES SAYED, Kader), Via del Fosso di Centocelle n.66, Roma, Italy; DOB 26 Dec 1962; POB Egypt; Italian Fiscal Code SSYBLK62T26Z336L (individual) [SDGT]
ESCALONA, Victor Julio, c/o C A V J CORPORATION LTDA., Bogota, Colombia; c/o VOL PHARMACYA LTDA., Cucuta, Colombia; c/o C.A. V.J. CORPORATION, Barquisimeto, Lara, Venezuela; C.I.N. 7353289 (Venezuela); Passport A0229910 (Venezuela) (individual) [SDNT]
ESCOBAR BUITRAGO, Walter, c/o SERVIAUTOS UNO A 1A LIMITADA, Cali, Colombia; c/o INMOBILIARIA BOLIVAR LTDA., Cali, Colombia; DOB 8 Feb 1971; Cedula No. 16785833 (Colombia); Passport AD254557 (Colombia) (individual) [SDNT]
ESCOBEDO CHAZARO, Raul, P.O. Box 432477, San Diego, CA 92143; c/o ENTREGA DE CORRESPONDENCIA OPORTUNA, S.A. DE C.V., Tijuana, Baja California, Mexico; c/o TERMINADOS BASICOS DE TIJUANA, S. DE R.L. DE C.V., Tijuana, Baja California, Mexico; c/o COMERCIALIZADORA E IMPORTADORA GARDES, S.A. DE C.V., Tijuana, Baja California, Mexico; DOB 16 Jun 1965; alt. DOB 16 Jul 1965; POB Distrito Federal, Mexico; citizen Mexico; nationality Mexico; C.U.R.P. EOCR650716HDFSHL08 (Mexico) (individual) [SDNTK]
ESCOBEDO MORALES, Sandra Angelica, c/o CENTRO CAMBIARIO KINO, S.A. DE C.V., Tijuana, Baja California, Mexico; c/o MULTISERVICIOS ALPHA, S.A. DE C.V., Tijuana, Baja California, Mexico; c/o CONSULTORIA DE INTERDIVISAS, S.A. DE C.V., Tijuana, Baja California, Mexico; DOB 25 Dec 1966; POB Guadalajara, Jalisco, Mexico (individual) [SDNTK]
ESFAHAN NUCLEAR FUEL RESEARCH AND PRODUCTION CENTER (a.k.a. ENTC; a.k.a. ESFAHAN NUCLEAR TECHNOLOGY CENTER; a.k.a. NFRPC; a.k.a. ''ESFAHAN NUCLEAR FUEL AND PROCUREMENT COMPANY''; a.k.a. ''NERPC''), P.O. Box 81465–1589, Esfahan, Iran [NPWMD]
ESMAELI, Reza-Gholi; DOB 3 Apr 1961; POB Tehran, Iran; Passport A0002302 (Iran) (individual) [NPWMD]
ESPACE AVENIR EXECUTIVE SERVICED APARTMENT (a.k.a. ESPACE AVENIR), No. 523, Pyay Road, Kamaryut Township, Yangon, Burma [JADE] [BURMA]
ESPANA CUELLAR, Irlena, c/o COLPHAR S.A., Bogota, Colombia; DOB 28 Feb 1965; Cedula No. 40764759 (Colombia); Passport 40764759 (Colombia) (individual) [SDNT]
ESPARRAGOZA MORENO, Juan Jose, Calle 8 8988, Colonia Zona Este, Tijuana, Baja California CP 22000, Mexico; Calle Colima 2316, Colonia Francisco I. Madero, Tijuana, Baja California CP 22150, Mexico; Avenida Los Angeles No. 5183, Colonia Las Palmas, Tijuana, Baja California CP 22440, Mexico; Predio Rustico en Km. 42—43 de la Carretera, Tijuana-Ensenada, Baja California, Mexico; Cjon. Quintana Roo 8220, Colonia Zona Este, Tijuana, Baja California, Mexico; DOB 3 Feb 1949; alt. DOB 2 Mar 1949; POB Chuicopa, Sinaloa, Mexico (individual) [SDNTK]
ESPARZA PENA, Jose de Jesus, c/o CAJA AMIGO EXPRESS, S.A. DE C.V., Tijuana, Baja California, Mexico; DOB 15 Nov 1966; POB Baja California, Mexico; citizen Mexico; nationality Mexico; C.U.R.P. EAPJ661115HBCSXS04 (Mexico) (individual) [SDNTK]
ESPIBENA COMERCIALIZADORA DE MEDICAMENTOS GENERICOS S.A. (a.k.a. ESPIBENA S.A.), Luis Cordero 1154 y Juan Leon Mera, Edificio Gabriela Mistral, Quito, Ecuador; RUC # 1791706420001 (Ecuador) [SDNT]
ESPITIA ORTIZ, Mauricio Arturo (a.k.a. SPITIA, Mauricio), c/o SPITIA VALENCIA LTDA., Cali, Colombia; c/o GRUPO INVERSOR PRINCIPE DE VERGARA S.L., Madrid, Spain; Spain; Carrera 25 F No. 7–15 Oeste, Cali, Colombia; c/o M S CONSTRUCTORES LTDA., Cali, Colombia; Calle Ayala 64 3 Iz., Madrid 28001, Spain; Carrera 42 No. 8–36, Cali, Colombia; c/o ARQUITECTOS UNIDOS LTDA., Cali, Colombia; c/o ESVA S.C.S., Cali, Colombia; DOB 29 Dec 1959; POB Barranquilla, Colombia; Cedula No. 16634827 (Colombia); Passport AJ424421 (Colombia) (individual) [SDNT]
ESQUIVEL PENA, William, c/o BANANERA AGRICOLA S.A., Santa Marta, Colombia; c/o UNIPAPEL S.A., Cali, Colombia; c/o J. FREDDY MAFLA Y CIA. S.C.S., Cali, Colombia; Cedula No. 16641631 (Colombia); Passport 16641631 (Colombia) (individual) [SDNT]
ESSAADI, Moussa Ben Amor Ben Ali (a.k.a. ''ABDELRAHMMAN''; a.k.a. ''BECHIR''; a.k.a. ''DAH DAH''), Via Milano n.108, Brescia, Italy; DOB 4 Dec 1964; POB Tabarka, Tunisia; nationality Tunisia; Passport L335915 issued 8 Nov 1996 expires 7 Nov 2001 (individual) [SDGT]
ESSABAR, Zakarya (a.k.a. ESSABAR, Zakariya), Dortmunder Strasse 38, Hamburg 22419, Germany; DOB 13 Apr 1977; alt. DOB 3 Apr 1977; POB Essaouria, Morocco (individual) [SDGT]
ESSID, Sami Ben Khemais (a.k.a. ELSSEID, Sami Ben Khamis Ben Saleh), Via Dubini n.3, Gallarate (VA), Italy; DOB 10 Feb 1968; POB Tunisia; nationality Tunisia; Italian Fiscal Code SSDSBN68B10Z352F; Passport K929139 issued 14 Feb 1995 expires 13 Feb 2000 (individual) [SDGT]
ESTABLO PUERTO RICO S.A. DE C.V. (a.k.a. ESTABLO LECHERO PUERTO RICO), Calle Indio De Guelatao Interior 20230, Colonia Miguel Hidalgo, Culiacan, Sinaloa, Mexico; Avenida Manuel Vallarta 2141, Colonia Centro, Culiacan, Sinaloa 80129, Mexico; Carretera El Salado, Quila KM 4, Culiacan, Sinaloa, Mexico; R.F.C. EPR–000322-UM9 (Mexico) [SDNTK]
ESTANCIA INFANTIL NINO FELIZ S.C., Avenida Manuel Vallarta 2141, Colonia Centro, Culiacan, Sinaloa 80129, Mexico [SDNTK]
ESTRADA RAMIREZ, Jose Arnoldo, c/o CONSTRUCTORA CENTRAL DEL VALLE LTDA., Cali, Colombia; c/o CLINICA ESPECIALIZADA DEL VALLE S.A., Cali, Colombia; c/o PARQUE INDUSTRIAL LAS DELICIAS LTDA., Cali, Colombia; Carrera 1H No. 39–56, Cali, Colombia; c/o INVERSIONES JAER LTDA., Cali, Colombia; c/o HIELO CRISTAL Y REFRIGERACION LTDA., Cali, Colombia; Calle 39 No. 1H–31, Cali, Colombia; c/o INVERSIONES SAN JOSE LTDA., Cali, Colombia; c/o MARIN ESTRADA Y CIA S. EN C.S., Cali, Colombia; DOB 14 Jul 1947; Cedula No. 16200018 (Colombia) (individual) [SDNT]
ESTRADA URIBE, Octavio, c/o GRUPO SANTA LTDA., Cali, Colombia; c/o SOCIEDAD CONSTRUCTORA LA CASCADA S.A., Cali, Colombia; DOB 7 Oct 1954; Cedula No. 19258562 (Colombia) (individual) [SDNT]
ESVA S.C.S. (a.k.a. FLEXX GYM), Carrera 42 No. 8–36, Cali, Colombia; NIT # 805019977–4 (Colombia) [SDNT]
ETCO INTERNATIONAL COMMODITIES LTD., Devonshire House, 1 Devonshire Street, London, United Kingdom [CUBA]
ETCO INTERNATIONAL COMPANY, LIMITED, Kawabe Building, 1–5 Kanda Nishiki-Cho, Chiyoda-Ku, Tokyo, Japan [CUBA]

EUROMAC EUROPEAN MANUFACTURER CENTER SRL, Via Ampere 5, 20052 Monza, Italy [IRAQ2]
EUROMAC TRANSPORTI INTERNATIONAL SRL, Via Ampere 5, 20052 Monza, Italy [IRAQ2]
EUROMAC, LTD, 4 Bishops Avenue, Northwood, Middlesex, United Kingdom [IRAQ2]
EUZKADI TA ASKATASUNA (a.k.a. ASKATASUNA; a.k.a. BASQUE FATHERLAND AND LIBERTY; a.k.a. BATASUNA; a.k.a. EKIN; a.k.a. EPANASTATIKI PIRINES; a.k.a. ETA; a.k.a. EUSKAL HERRITARROK; a.k.a. HERRI BATASUNA; a.k.a. JARRAI-HAIKA-SEGI; a.k.a. K.A.S.; a.k.a. POPULAR REVOLUTIONARY STRUGGLE; a.k.a. XAKI) [FTO] [SDGT]
EXCHANGE CENTER LTDA, Calle 183 No 45–03 Local 328, Bogota, Colombia; Avenida Carrera 19 No. 122–49 Local 13, Bogota, Colombia; NIT # 830003608–2 (Colombia) [SDNTK]
EXPLORATION AND PRODUCTION AUTHORITY (SUDAN), Kuwait Building, Nile Avenue, Khartoum, Sudan; P.O. Box 2986, Khartoum, Sudan [SUDAN]
EXPLOTACIONES AGRICOLAS Y GANADERAS LA LORENA S.C.S. (a.k.a. EXAGAN), Calle 5 No. 22–39 of. 205, Cali, Colombia; Calle 52 No. 28E–30, Cali, Colombia; NIT # 800083192–3 (Colombia) [SDNT]
EXPORT CAFE LTDA., Carrera 7 No. 11–22 of. 413, Cali, Colombia [SDNT]
EXPORT DEVELOPMENT BANK OF IRAN (a.k.a. BANK TOSEH SADERAT IRAN; a.k.a. BANK TOWSEEH SADERAT IRAN; a.k.a. EDBI), No. 129, 21's Khaled Eslamboli, No. 1 Building, Tehran, Iran; Export Development Building, Next to the 15th Alley, Bokharest Street, Argentina Square, Tehran, Iran; Tose'e Tower, Corner of 15th St., Ahmad Qasir Ave., Argentine Square, Tehran, Iran; C.R. No. 86936 (Iran); All branches worldwide [NPWMD]
EXPORTADORA DEL CARIBE, Medira, Mexico [CUBA]
EYRIE FARM, Mashvingo, Zimbabwe [ZIMBABWE]
FABRO INVESTMENT, INC., Panama [CUBA]
FACOBATA, Panama [CUBA]
FADHIL, Mustafa Mohamed (a.k.a. AL MASRI, Abd Al Wakil; a.k.a. ALI, Hassan; a.k.a. AL-NUBI, Abu; a.k.a. ANIS, Abu; a.k.a. ELBISHY, Moustafa Ali; a.k.a. FADIL, Mustafa Muhamad; a.k.a. FAZUL, Mustafa; a.k.a. HUSSEIN; a.k.a. JIHAD, Abu; a.k.a. KHALID; a.k.a. MAN, Nu; a.k.a. MOHAMMED, Mustafa; a.k.a. YUSSRR, Abu); DOB 23 Jun 1976; POB Cairo, Egypt; citizen Egypt; alt. citizen Kenya; Kenyan ID No. 12773667; Serial No. 201735161 (individual) [SDGT]
FADLALLAH, Shaykh Muhammad Husayn; DOB 1938; alt. DOB 1936; POB Najf Al Ashraf (Najaf), Iraq; Leading Ideological Figure of HIZBALLAH (individual) [SDT]
FAJARDO CUELLAR, Jairo, c/o CHAMARTIN S.A., Cali, Colombia; c/o ADMINISTRADORA DE SERVICIOS VARIOS CALIMA S.A., Cali, Colombia; Cedula No. 1619282 (Colombia); Passport 1619282 (Colombia) (individual) [SDNT]
FAJARDO HERNANDEZ, Gloria Elena, c/o INDUSTRIAS DEL ESPIRITU SANTO S.A., Malambo, Atlantico, Colombia; c/o DOXA S.A., La Union, Valle, Colombia; c/o FUNDACION CENTRO DE INVESTIGACION HORTIFRUTICOLA DE COLOMBIA, La Union, Valle, Colombia; c/o AGROPECUARIA EL NILO S.A., La Union, Valle, Colombia; Cedula No. 29926353 (Colombia) (individual) [SDNT]
FAJARDO, Mary Victoria, c/o APVA S.A., Cali, Colombia; c/o CECEP S.A., Cali, Colombia; c/o CECEP EDITORES S.A., Cali, Colombia; c/o WORLD LINE SYSTEM S.A., Palmira, Valle, Colombia; c/o NEGOCIOS Y CAPITALES S.A., Pereira, Colombia; Cali, Colombia; Cedula No. 31923020 (Colombia) (individual) [SDNT]
FAJR INDUSTRIES GROUP (a.k.a. FADJR INDUSTRIES GROUP; a.k.a. IFP; a.k.a. INDUSTRIAL FACTORIES OF PRECISION-MACHINERY; a.k.a. INSTRUMENTATION FACTORIES OF PRECISION MACHINERY; a.k.a. INSTRUMENTATION FACTORY PLANT; a.k.a. MOJTAME SANTY AJZAE DAGHIGH; a.k.a. NASR INDUSTRIES GROUP), P.O. Box 1985–777, Tehran, Iran [NPWMD]
FAKHRIZADEH-MAHABADI, Mohsen (a.k.a. FAKHRIZADEH; a.k.a. FAKHRIZADEH, Mohsen); Passport A0009228; alt. Passport 4229533 (individual) [NPWMD]
FALCON SYSTEMS, United Kingdom [IRAQ2]
FAMBA SAFARIS, P.O. Box CH273, Chisipite, Harare, Zimbabwe; 4 Wayhill Lane, Umwisdale, Harare, Zimbabwe [ZIMBABWE]
FAMESA INTERNATIONAL, S.A., Panama [CUBA]
FARAJ, Samal Majid, Iraq; Former Minister of Planning (individual) [IRAQ2]
FARALLONES STEREO 91.5 FM, Calle 15N No. 6N–34 piso 15, Edificio Alcazar, Cali, Colombia [SDNT]
FARASAKHT INDUSTRIES, P.O. Box 83145–311, Kilometer 28, Esfahan—Tehran Freeway, Shahin Shahr, Esfahan, Iran [NPWMD]
FARAYAND TECHNIQUE (a.k.a. FARAYAND TECHNIC), Isfahan, Iran; Esfahan, Iran; P.O. Box 14155–1339, Tehran, Iran; End of North Karegar Avenue, Shomali, Tehran, Iran [NPWMD]
FARFALLA INVESTMENT S.A., Calle Elida Diez. Nuevo Reparto El Carme Edif. Milena No. 1, Panama City, Panama; RUC # 1986361395028 (Panama) [SDNT]
FARFAN SUAREZ, Alexander (a.k.a. ''ENRIQUE GAFAS''), Colombia; DOB 12 Feb 1973; POB San Jose del Guaviare, Guaviare, Colombia; citizen Colombia; nationality Colombia; Cedula No. 86007030 (Colombia) (individual) [SDNTK]
FARMA 3.000 LIMITADA, Calle 12B No. 27–39 of. 203, Bogota, Colombia; Via Circunvalar, Bodega M-A–3, Barranquilla, Colombia; Calle 39 BIS A No. 27–16 and 27–20, Bogota, Colombia; NIT # 802012873–4 (Colombia) [SDNT]
FARMA XXI LTDA., Calle 39 BIS A No. 27–16 and 27–20, Bogota, Colombia; Calle 12 No. 5–07 of. 301, Neiva, Huila, Colombia; NIT # 813006330–2 (Colombia) [SDNT]
FARMACIA JERLYNE, S.A. DE C.V. (a.k.a. FARMACIA JARLINE, S.A. DE C.V.; a.k.a. FARMACIA JARLYNE, S.A. DE C.V.; a.k.a. FARMACIAS JERLYNE, S.A. DE C.V.), Avenida Benito Juarez 2020–8, Colonia Zona Centro, Tijuana, Baja California, Mexico; Lot 70, Sector 6, Colonia Jardines de Chapultepec, Baja California, Mexico; Buenaventura 391, Fraccionamiento Chapultepec, Tijuana, Baja California, Mexico; Cascadas 100–2, Colonia Las Huertas, Tijuana, Baja California, Mexico; Avenida Revolucion 2020, Tijuana, Baja California 22000, Mexico; Lot 18, Sector 21, Centro Urbano 70–76, Colonia Mesa de Otay, Baja California, Mexico; Lots 13, 14, Sector A, Rancho El Grande, Baja California, Mexico [SDNTK]
FARMACIA VIDA SUPREMA, S.A. DE C.V. (a.k.a. FARMACIA VIDA; a.k.a. FARMACIAS VIDA), Blvd. D. Ordaz No. 700–316, Tijuana, Baja California, Mexico; Calle 4ta. Y Ninos Heroes 1802, Tijuana, Baja California, Mexico; Paseo Estrella del Mar 1075-B, Placita Coronado, Playas de Tijuana, Tijuana, Baja California, Mexico; Calle Benito Juarez 1890-A, Tijuana, Baja California, Mexico; Blvd. Benito Juarez 20000, Rosarito, Baja California, Mexico; Avenida Tecnologico 15300–308, Centro Comercial Otay Universidad, Tijuana, Baja California, Mexico; Avenida Constitucion 823, Tijuana, Baja California, Mexico; Calle Benito Juarez 1941, Tijuana, Baja California, Mexico; Avenida Revolucion 651, Zona Centro, Tijuana, Baja California, Mexico; Calle 4ta. 1339 y 'G', Tijuana, Baja California, Mexico; Blvd. Fundadores 8417, Fraccionamiento El Rubi, Tijuana, Baja California, Mexico; Blvd. Sanchez Taboada 4002, Zona Rio, Tijuana, Baja California, Mexico; Calle Carrillo Puerto (3ra.) No. 1434–131, Tijuana, Baja California, Mexico; Blvd. Agua Caliente 1381, Colonia Revolucion, Tijuana, Baja California, Mexico; Avenida Constitucion y 10ma., Tijuana, Baja California, Mexico; Blvd. Diaz Ordaz No. 1159–101, Tijuana, Baja California, Mexico; Plaza del Norte, M. Matamoros No. 10402, Frac. M. Matamoros, Tijuana, Baja California, Mexico; Avenida Constitucion No. 1300, Tijuana, Baja California, Mexico; Avenida Negrete No. 1200, Tijuana, Baja California, Mexico; Avenida 16 de Septiembre No. 1100, Tijuana, Baja California, Mexico; Avenida Jose Lopez Portillo 131-B, Modulos Otay, Tijuana, Baja California, Mexico; Toribio Ortega No. 6072–1 Colonia Fco. Villa, Tijuana, Baja California, Mexico; Blvd. Ejido Matamoros No. 402–1 Lomas Granjas la Espanola, Tijuana, Baja California, Mexico; Calz. Cucapah 20665–1B Colonia Buenos Aires Norte, Tijuana, Baja California, Mexico; Avenida Segunda No. 1702, Tijuana, Baja California, Mexico; Avenida Benito Juarez No. 16–2, Rosarito, Baja California, Mexico; Avenida Las Americas, Int. Casa Ley, Tijuana, Baja California, Mexico; Blvd. Diaz Ordaz 915, La Mesa, Tijuana, Baja California, Mexico; R.F.C. FVS–870610-LX3 (Mexico) [SDNTK]
FARMACOOP (a.k.a. COOPERATIVA MULTIACTIVA DE COMERCIALIZACION Y SERVICIOS FARMACOOP; f.k.a. LABORATORIOS KRESSFOR DE COLOMBIA S.A.), Calle 16 No. 28A–57, Bogota, Colombia; Calle 17A No. 28A–43,

Bogota, Colombia; Calle 16 No. 28A–51, Bogota, Colombia; A.A. 18491, Bogota, Colombia; Calle 17A No. 28–43, Bogota, Colombia; NIT # 830010878–3 (Colombia) [SDNT]

FARMAHOGAR (a.k.a. DROGUERIA FARMAHOGAR; a.k.a. FARMAHOGAR COPSERVIR 19), Carrera 7 No. 118–38, Bogota, Colombia; Avenida 7 No. 118–46, Bogota, Colombia; NIT # 830011670–3 (Colombia) [SDNT]

FARMALIDER S.A., Calle 17 Norte No. 3N–16, Cali, Colombia; NIT # 805026183–2 (Colombia) [SDNT]

FARMATEL E.U. (a.k.a. TELEFARMA E.U.), Calle 93 No. 16–75, Bogota, Colombia [SDNT]

FARMATODO S.A., Diagonal 17 No. 28A–39, Bogota, Colombia; Diagonal 17 No. 28A–80, Bogota, Colombia [SDNT]

FARMEDIS LTDA., Calle 12 No. 5–07 of. 301, Neiva, Colombia; Calle 17A No. 28A–43, Bogota, Colombia; Carrera 42C No. 22C–36, Bogota, Colombia; NIT # 813009188–6 (Colombia) [SDNT]

FARMERS COMMERCIAL BANK (f.k.a. FARMERS BANK FOR INVESTMENT & RURAL DEVELOPMENT; f.k.a. SUDAN COMMERCIAL BANK), P.O. Box 1174, Gamhoria Avenue, Khartoum, Sudan; P.O Box 570, Port Sudan, Sudan; El Fau, Sudan; P.O. Box 45153, El Suk Elarabi, Sudan; Wad Madani, Sudan; P.O. Box 1116, El Kasr Avenue, Khartoum, Sudan; P.O. Box 412, El Obeid, Sudan; P.O. Box 36, New Halfa, Sudan; P.O. Box 1, El Hawata, Sudan; P.O. Box 22, El Damazin, Sudan; P.O. Box 8, El Nuhud, Sudan; P.O. Box 8127, Khartoum, Sudan; P.O. Box 182, El Gadaref, Sudan; P.O. Box 899, Omdurman, Sudan; P.O. Box 1694, El Suk Elafrangi, Khartoum, Sudan; P.O. Box 86, Industrial Area, Khartoum, Sudan; P.O. Box 384, Khartoum, Sudan [SUDAN]

FAROOQ, Muhammad; DOB 12 Mar 1949; nationality Pakistan; Passport S122252 (Pakistan) (individual) [NPWMD]

FARTRADE HOLDINGS S.A., Switzerland [IRAQ2]

FATAH AL-ISLAM, Nahr al-Barid Palestinian refugee camp, Lebanon [SDGT]

FATTAH, Jum'a Abdul, P.O. Box 1318, Amman, Jordan (individual) [IRAQ2]

FAVARONY URREA, Pedro F., c/o COPSERVIR LTDA., Bogota, Colombia; Cedula No. 167136671 (Colombia) (individual) [SDNT]

FAYAD, Saleh Mahmoud (a.k.a. FAYYAD, Saleh Mahmud); DOB 20 Oct 1972; POB Al-Taybe, Lebanon (individual) [SDGT]

FAYAD, Sobhi Mahmoud (a.k.a. FAYAD, Soubi Mamout; a.k.a. FAYADH, Sobhi Mahmoud; a.k.a. FAYYAD, Subhi Mahmud), 315, Piso 3, Galeria Page, Ciudad del Este, Paraguay; DOB 20 Aug 1965; POB Al-Taybe, Lebanon; citizen Paraguay; alt. citizen Lebanon; Passport 002301585 (Paraguay); alt. Passport 142517 (Paraguay); alt. Passport 220705 (Paraguay); alt. Passport 1035562 (Paraguay); alt. Passport 189103 (Paraguay) (individual) [SDGT]

FERNANDEZ CASTRO, Fernando Alberto (a.k.a. ''FERCHO''), c/o GIMNASIO BODY AND HEALTH, Barranquilla, Colombia; DOB 12 May 1966; POB Colombia; Cedula No. 72137518 (Colombia) (individual) [SDNT]

FERNANDEZ GRANADOS, Claudia, c/o CAJA SOLIDARIA, Bogota, Colombia; c/o COOMULCOSTA, Barranquilla, Colombia; c/o COPSERVIR LTDA., Bogota, Colombia; Cedula No. 57433265 (Colombia) (individual) [SDNT]

FERNANDEZ LACERA, Felix Daniel, Carrera 95 No. 68A–24 ap. 221, Bogota, Colombia; c/o COOPIFARMA, Bucaramanga, Colombia; c/o COPSERVIR LTDA., Bogota, Colombia; Cedula No. 4979304 (Colombia) (individual) [SDNT]

FERNANDEZ LUNA, Tiberio, c/o COPSERVIR LTDA., Bogota, Colombia; c/o DISTRIBUIDORA DE DROGAS CONDOR S.A., Bogota, Colombia; c/o LABORATORIOS BLANCO PHARMA DE COLOMBIA S.A., Bogota, Colombia; DOB 3 Nov 1960; Cedula No. 93286690 (Colombia); Passport AE956843 (Colombia) (individual) [SDNT]

FETTAR, Rachid (a.k.a. ''AMINE DEL BELGIO''; a.k.a. ''DJAFFAR''), Via degli Apuli n.5, Milan, Italy; DOB 16 Apr 1969; POB Boulogin, Algeria (individual) [SDGT]

FIDUSER LTDA., Calle 12A No. 27–72, Bogota, Colombia; NIT # 830013160–8 (Colombia) [SDNT]

FIFTH OCEAN; Vessel Registration Identification IMO 9349667 (vessel) [NPWMD]

FIGAL ARRANZ, Antonio Agustin; DOB 2 Dec 1972; POB Baracaldo, Vizcaya Province, Spain; D.N.I. 20.172.692 (Spain); Member ETA (individual) [SDGT]

FIGUEROA DE BRUSATIN, Dacier, c/o W. HERRERA Y CIA. S. EN C., Cali, Colombia; c/o INVERSIONES EL GRAN CRISOL LTDA., Cali, Colombia; DOB 7 Nov 1930; Cedula No. 29076093 (Colombia) (individual) [SDNT]

FIGUEROA PERALTA, Eduardo Alberto, c/o CAJA SOLIDARIA, Bogota, Colombia; c/o LITOPHARMA, Barranquilla, Colombia; c/o COPSERVIR LTDA., Bogota, Colombia; c/o COOMULCOSTA, Barranquilla, Colombia; Calle 63 No. 16–61, Barranquilla, Colombia; Cedula No. 8747807 (Colombia) (individual) [SDNT]

FINANCIACION Y EMPRESA S.A. (a.k.a. FINEMPRESA S.A.), Calle 16 Norte No. 9N–41, Cali, Colombia; NIT # 800153965–0 (Colombia) [SDNT]

FINANZAS DEL NORTE LUIS SAIEH Y CIA. S.C.A. (f.k.a. FINANZAS DEL NORTE LTDA.), Calle 77 B No. 57—141, Ofc. 917, Barranquilla, Colombia; NIT # 890108715–2 (Colombia) [SDNT]

FINVE S.A. (f.k.a. FINANCIERA DE INVERSIONES LTDA.), Calle 93A No. 14–17 Ofc. 711, Bogota, Colombia; Calle 93N No. 14–20 Ofc. 601, Bogota, Colombia; NIT # 860074650–5 (Colombia) [SDNT]

FIORILLO BAPTISTE, Lester Raul, c/o CONSTRUCCIONES PROGRESO DEL PUERTO S.A., Puerto Tejada, Colombia; Calle 27 Norte No. 6AN–43, Cali, Colombia; Cedula No. 14987352 (Colombia); Passport 14987352 (Colombia) (individual) [SDNT]

FIRST OF OCTOBER ANTIFASCIST RESISTANCE GROUP (GRAPO), Spain [SDGT]

FIRST PERSIAN EQUITY FUND (a.k.a. FIRST PERSIA EQUITY FUND; a.k.a. FPEF), Rafi Alley, Vali Asr Avenue, Nader Alley, P.O. Box 15875–3898, Tehran 15116, Iran; Walker House, 87 Mary Street, George Town, Grand Cayman KY1–9002, Cayman Islands; Clifton House, 75 Fort Street, P.O. Box 190, Grand Cayman KY1–1104, Cayman Islands [NPWMD]

FISHING ENTERPRISE HOLDING, INC., Avenida Samuel Lewis, Edificio Comosa, Piso 16, Panama City, Panama; RUC # 2120741397076 (Panama) [SDNT]

FITCH PARENTE, Jose Elmer, c/o MINERA RIO PRESIDIO S.A. DE C.V., Culiacan, Sinaloa, Mexico; Francisco I. Madero Numero 145 al Oriente, Colonia Centro, Culiacan, Sinaloa, Mexico; c/o MINERA LA CASTELLANA Y ANEXAS S.A. DE C.V., Culiacan, Sinaloa, Mexico; c/o COMPANIA MINERA DEL RIO CIANURY S.A. DE C.V., Culiacan, Sinaloa, Mexico; DOB 27 Jan 1965; POB Mazatlan, Sinaloa, Mexico; citizen Mexico; nationality Mexico; C.U.R.P. FIPE650127HSLTRL05 (Mexico); R.F.C. FIPJ650127 (Mexico) (individual) [SDNTK]

FITCH PARENTE, Pablo Antonio, Boulevard Francisco I. Madero Numero 145 al Oriente, Colonia Centro, Culiacan, Sinaloa, Mexico; c/o COMPANIA MINERA DEL RIO CIANURY S.A. DE C.V., Culiacan, Sinaloa, Mexico; DOB 24 Mar 1966; POB Mazatlan, Sinaloa, Mexico; citizen Mexico; nationality Mexico; C.U.R.P. FIPP660324HSLTRB07 (Mexico); R.F.C. FIPP660324 (Mexico) (individual) [SDNTK]

FITCH TOVAR, Jose Manuel, c/o COPA DE PLATA S.A. DE C.V., Culiacan, Sinaloa, Mexico; c/o COMPANIA MINERA DEL RIO CIANURY S.A. DE C.V., Culiacan, Sinaloa, Mexico; c/o MINERA RIO PRESIDIO S.A. DE C.V., Culiacan, Sinaloa, Mexico; c/o MINERA LA CASTELLANA Y ANEXAS S.A. DE C.V., Culiacan, Sinaloa, Mexico; Rio de la Plata, numero 28, Campo Bello de Mazatlan, Sinaloa, Mexico; DOB 28 Dec 1936; POB Panuco, Concordia, Sinaloa, Mexico; citizen Mexico; nationality Mexico; R.F.C. FITM361228 (Mexico) (individual) [SDNTK]

FLETES Y TRANSPORTES GAXGAR S.A. DE C.V., Alberto Truqui 581, Col. Pimentel, CP 83188, Hermosillo, Sonora, Mexico, Hermosillo, Sonora 83188, Mexico; Boulevard Luis Encinas No 581-B Esquina Alberto Truqui, Colonia Pimentel, Hermosillo, Sonora, Mexico; Guadalajara, Jalisco, Mexico; R.F.C. FTG950807F20 (Mexico) [SDNTK]

FLEXOEMPAQUES LTDA. (f.k.a. PLASTICOS CONDOR LTDA.), Carrera 13 No. 16–62, Cali, Colombia; NIT # 800044167–2 (Colombia) [SDNT]

FLIGHT DRAGON SHIPPING LTD., c/o ANGLO-CARIBBEAN SHIPPING CO. LTD., 4th Floor, South Phase 2, South Quay Plaza II, 183, March Wall, London, United Kingdom [CUBA]

FLORES MONROY, Julio Cesar (a.k.a. FLORES, Julio C.), Calle Granito No. 2025, Seccion El Dorado, Fraccionamiento Playas de Tijuana, Tijuana, Baja California, Mexico; c/o ACCESOS ELECTRONICOS, S.A. DE C.V., Calle David Alfaro Siqueiros 2789 #201, Col. Zona Rio, Tijuana, Baja California, Mexico; C. Azteca 0, Col.

Azteca, Tijuana, Baja California CP 22000, Mexico; Calle Granito No. 602, Seccion El Dorado, Fraccionamiento Playas de Tijuana, Tijuana, Baja California, Mexico; c/o KONTROLES ELECTRONICOS DE BAJA CALIFORNIA, S.A. DE C.V., Ave. Azueta 11750, Col. Libertad, Tijuana, Baja California CP 22400, Mexico; DOB 13 Jul 1944; POB Guadalajara, Jalisco, Mexico; Immigration No. A07268659 (United States) (individual) [SDNTK]

FLOREZ GRAJALES, Yudy Lorena (a.k.a. FLOREZ GRAJALES, Yudi Lorena), Carrera 78 No. 3–46, Cali, Colombia; Carrera 8N No. 17A–12, Cartago, Colombia; c/o AGROPECUARIA MIRALINDO S.A., Cartago, Colombia; c/o ARIZONA S.A., Cartago, Colombia; DOB 26 Jun 1978; Cedula No. 32180561 (Colombia); Passport 32180561 (Colombia) (individual) [SDNT]

FLOREZ SARAMA, Jorge Humberto, c/o ASESORIAS DE INGENIERIA EMPRESA UNIPERSONAL, Cali, Colombia; c/o ADMINISTRADORA DE SERVICIOS VARIOS CALIMA S.A., Cali, Colombia; c/o CHAMARTIN S.A., Cali, Colombia; c/o SERVICIOS DE LA SABANA E.U., Bogota, Colombia; Cedula No. 13007449 (Colombia); Passport 13007449 (Colombia) (individual) [SDNT]

FLORIDA SOCCER CLUB S.A. (a.k.a. CORPORACION DEPORTIVA FLORIDA SOCCER CLUB; a.k.a. FSC S.A.), Calle 49B No. 74–31 Sector Estadio, Medellin, Colombia; Itagui, Antioquia, Colombia; Calle 48 No. 70–80 Ofc. 115, Medellin, Colombia; NIT # 811046159–2 (Colombia) [SDNT]

FLYING DRAGON (vessel) [CUBA]

FMF GENERAL TRADING LLC, Ahmad Abdulla Bahzad Building, Al Qusais Street, Al Qusais Industrial Area, Dubai, United Arab Emirates; P.O. Box 16542, Dubai, United Arab Emirates; C.R. No. 66488 (United Arab Emirates) [SDNTK]

FOFIE, Martin Kouakou; DOB 1 Jan 1968; ''New Forces'' (Forces Nouvelles) Zone Commander in Korhogo (individual) [COTED]

FOGENSA S.A. (a.k.a. FORMAS GENERICAS FARMACEUTICAS S.A.), Calle 53 No. 31–69, Bucaramanga, Colombia; Carrera 42C No. 22C–36, Bogota, Colombia; Calle 53 No. 31–52, Bucaramanga, Colombia; NIT # 804005325–8 (Colombia) [SDNT]

FOMEQUE BLANCO, Amparo, Mz. 21 Casa 5 Barrio San Fernando, Pereira, Colombia; c/o INDUSTRIA DE PESCA SOBRE EL PACIFICO S.A., Buenaventura, Colombia; DOB 26 Mar 1948; Cedula No. 31206092 (Colombia) (individual) [SDNT]

FONSECA PARAMO, Luisa Fernanda, c/o REPRESENTACIONES Y DISTRIBUCIONES HUERTAS Y ASOCIADOS S.A., Bogota, Colombia; DOB 18 Nov 1978; Cedula No. 30400266 (Colombia); Passport 30400266 (Colombia) (individual) [SDNT]

FONTES MORENO, Eleazar, c/o AGRICOLA GAXIOLA S.A. DE C.V., Hermosillo, Sonora, Mexico; Ave. Real 73, Hermosillo, Sonora 83200, Mexico; c/o TEMPLE DEL PITIC S.A. DE C.V., Hermosillo, Sonora, Mexico; Avenida Serdan No. 122 Poniente, Altos 10, Hermosillo, Sonora, Mexico; DOB 23 Jul 1947; POB Hermosillo, Sonora, Mexico; citizen Mexico; nationality Mexico; C.U.R.P. FOME470723HSRNRL05 (Mexico); Passport 260057687 (Mexico) (individual) [SDNTK]

FOOD INDUSTRIES CORPORATION, P.O. Box 2341, Khartoum, Sudan [SUDAN]

FORENINGEN AL-AQSA (a.k.a. AL-AQSA ASBL; a.k.a. AL-AQSA CHARITABLE FOUNDATION; a.k.a. AL-AQSA CHARITABLE ORGANIZATION; a.k.a. AL-AQSA E.V.; a.k.a. AL-AQSA FOUNDATION; a.k.a. AL-AQSA INTERNATIONAL FOUNDATION; a.k.a. AL-AQSA ISLAMIC CHARITABLE SOCIETY; a.k.a. AL-AQSA SINABIL ESTABLISHMENT; a.k.a. AL-AQSA SPANM I STIFTELSE; a.k.a. AL-AQSA SPANMAL STIFTELSE; a.k.a. AQSSA SOCIETY; a.k.a. AQSSA SOCIETY YEMEN; a.k.a. CHARITABLE AL-AQSA ESTABLISHMENT; a.k.a. CHARITABLE SOCIETY TO HELP THE NOBLE AL-AQSA; a.k.a. ISLAMIC CHARITABLE SOCIETY FOR AL-AQSA; a.k.a. MU' ASA AL-AQSA AL-KHAYRIYYA; a.k.a. MU' ASSA SANABIL AL-AQSA AL-KHAYRIYYA; a.k.a. NUSRAT AL-AQSA AL-SHARIF; a.k.a. SANABIL AL-AQSA CHARITABLE FOUNDATION; a.k.a. STICHTING AL-AQSA; a.k.a. SWEDISH CHARITABLE AQSA EST.), P.O. Box 6222200KBKN, Copenhagen, Denmark [SDGT]

FORERO SALAMANCA, Sonia Viviana, c/o INTERFARMA S.A., San Jose, Costa Rica; c/o CREDIREBAJA S.A., Cali, Colombia; c/o COPSERVIR LTDA., Bogota, Colombia; c/o JOMAGA DE COSTA RICA S.A., San Jose, Costa Rica; DOB 16 Oct 1975; Cedula No. 52342283 (Colombia); Passport 52342283 (Colombia) (individual) [SDNT]

FORPRES, S.C., Tijuana, Baja California, Mexico [SDNTK]

FORUZANDEH, Ahmed (a.k.a. FAYRUZI, Ahmad; a.k.a. FOROOZANDEH, Ahmad; a.k.a. FORUZANDEH, Ahmad; a.k.a. FRUZANDAH, Ahmad; a.k.a. ''ABU AHMAD ISHAB''; a.k.a. ''ABU SHAHAB''; a.k.a. ''JAFARI''), Qods Force Central Headquarters, Former U.S. Embassy Compound, Tehran, Iran; DOB circa 1960; alt. DOB circa 1958; alt. DOB circa 1963; alt. DOB circa 1959; alt. DOB 1957; alt. DOB circa 1955; alt. DOB circa 1961; alt. DOB circa 1962; POB Kermanshah, Iran; Brigadier General, Commanding Officer of the Iranian Islamic Revolutionary Guard Corps-Qods Force Ramazan Corps; Deputy Commander of the Ramazan Headquarters; Chief of Staff of the Iraq Crisis Staff (individual) [IRAQ3]

FOUNTAIN FARM, Insiza, Zimbabwe [ZIMBABWE]

FRANCO MUNOZ, Francisco, Calle 10 Bis No. 67A–51, Cali, Colombia; c/o GRAN MUELLE S.A., Buenaventura, Colombia; POB Facatativa, Cundinamarca, Colombia; Cedula No. 03014999 (Colombia); Passport 03014999 (Colombia) (individual) [SDNT]

FRANCO RUIZ, Nestor Raul, Carrera 142 No. 18A–80 Casa 23, Cali, Colombia; Avenida 5AN No. 51N–27, Cali, Colombia; DOB 21 Aug 1967; POB Cali, Colombia; Cedula No. 16744648 (Colombia); Passport AF828495 (Colombia) (individual) [SDNT]

FRANCO RUIZ, Ruben Alberto, c/o CAMPO LIBRE A LA DIVERSION E.U., Yumbo, Valle, Colombia; Avenida 5N No. 51–57, Cali, Colombia; Calle 34N No. 3CN–62, Cali, Colombia; DOB 18 Feb 1964; POB Cali, Colombia; Cedula No. 16702454 (Colombia); Passport AH070927 (Colombia) (individual) [SDNT]

FRANCO VALENCIA, Fabio Hernan, Carrera 4 No. 11–45 Ofc. 506, Cali, Colombia; c/o GEOPLASTICOS S.A., Cali, Colombia; c/o CIA. MINERA DAPA S.A., Bogota, Colombia; c/o CIA. ANDINA DE EMPAQUES LTDA., Cali, Colombia; c/o OCCIDENTAL DE PAPELES LTDA., Cali, Colombia; c/o COMPANIA DE FOMENTO MERCANTIL S.A., Cali, Colombia; DOB 06 Dec 1940; POB Cali, Valle, Colombia; Cedula No. 6076743 (Colombia); Passport 6076743 (Colombia) (individual) [SDNT]

FREE LIFE PARTY OF KURDISTAN (a.k.a. KURDISTAN FREE LIFE PARTY; a.k.a. PARTIYA JIYANA AZAD A KURDISTANE; a.k.a. PARTY OF FREE LIFE OF KURDISTAN; a.k.a. PEJAK; a.k.a. PEZHAK; a.k.a. PJAK), Razgah, Iran; Qandil Mountain, Irbil Governorate, Iraq [SDGT]

FREGOSO AMEZQUITA, Maria Antonieta, Calle Jerez 552-B, Fraccionamiento Chapultepec, CP 22420, Tijuana, Baja California, Mexico; c/o Administradora De Inmuebles Vida, S.A. de C.V., Tijuana, Baja California, Mexico; Calle Jerez 538, Fraccionamiento Chapultepec, Tijuana, Baja California, Mexico; c/o Forpres, S.C., Tijuana, Baja California, Mexico; c/o Operadora Valpark, S.A. de C.V., Tijuana, Baja California, Mexico; c/o ADP, S.C., Tijuana, Baja California, Mexico; c/o Accesos Electronicos, S.A. de C.V., Tijuana, Baja California, Mexico; DOB 29 Oct 1952; POB Guadalajara, Jalisco; Credencial electoral 088455751391 (Mexico); Driver's License No. 180839 (Mexico); R.F.C. AEL–980417-S51 (Mexico) (individual) [SDNTK]

FREIGHT MOVERS INTERNATIONAL, Airport Road, Basseterre, Basseterre, Saint Kitts and Nevis; Church Street, Basseterre, Basseterre, Saint Kitts and Nevis; Offices in St. Kitts and Nevins, West Indies ONLY [SDNTK]

FRIENDSHIP SPINNING FACTORY, Hassaheisa, Sudan [SUDAN]

FRIGO HISPANIA (vessel) [CUBA]

FRONT FOR ALBANIAN NATIONAL UNITY (a.k.a. FBKSH) [BALKANS]

FRONTERA VIRTUAL S.A., Carrera 12 No. 90–19, Piso 2, Bogota, Colombia; NIT # 830118496–9 (Colombia) [SDNT]

FRUNI TRADING CO., c/o MELFI MARINE CORPORATION S.A., Oficina 7, Edificio Senorial, Calle 50, Apartado 31, Panama City 5, Panama [CUBA]

FRUTAS EXOTICAS COLOMBIANOS S.A. (a.k.a. FREXCO S.A.), Factoria La Rivera, La Union, Valle, Colombia; NIT # 800183514–0 (Colombia) [SDNT]

FUDIA LTDA., Calle 111 No. 36B–17, Barranquilla, Colombia; NIT # 800230555–4 (Colombia) [SDNT]

FUENTES COBA, Fernando, Cozumel, Mexico (individual) [CUBA]

FUNDACION CENTRO DE INVESTIGACION HORTIFRUTICOLA DE COLOMBIA (a.k.a. CENIHF), Km. 2 La Victoria, La Union, Valle, Colombia; NIT # 821002640–1 (Colombia) [SDNT]

FUNDACION CENTRO FRUTICOLA ANDINO, Km. 2 Via La Victoria, La Union, Valle, Colombia; NIT # 800077756–2 (Colombia) [SDNT]

FUNDACION PARA LA EDUCACION Y EL DESARROLLO SOCIAL (a.k.a. FUNDASOCIAL), Calle 16 Norte No. 9N–41, Cali, Colombia; NIT # 800142875–9 (Colombia) [SDNT]

FUNDACION PARA LA PAZ DE CORDOBA (a.k.a. FUNDACION POR LA PAS DE CORDOBA; a.k.a. FUNDAZCOR; a.k.a. FUNPAZCOR), Carrera 6 No. 29–12, Monteria, Cordoba, Colombia; NIT # 830054536–9 (Colombia) [SDNTK]

FUNDACION VIVIR MEJOR (a.k.a. F.V.M.), Calle 8 No. 22–60, Cali, Colombia; NIT # 805002213–1 (Colombia) [SDNT]

FUNDASER (a.k.a. FUNDACION DE CALI PARA EL DESARROLLO HUMANO; a.k.a. FUNDACION PARA EL SERVICIO DEL SER INTEGRAL; a.k.a. FUNDECALI), Calle 29 Norte No. 6N–43, Cali, Colombia; Calle 2 No. 4–14 of. 101, Cali, Colombia; NIT # 800243417–2 (Colombia) [SDNT]

FURUNDZIJA, Anto; DOB 8 Jul 1969; POB Travnik, Bosnia-Herzegovina; ICTY indictee (individual) [BALKANS]

FUSTAR, Dusan; DOB 29 Jun 1954; POB Prijedor, Bosnia-Herzegovina; ICTY indictee in custody (individual) [BALKANS]

FUTURE BANK B.S.C., Block 304, City Centre Building, Building 199, Government Avenue, Road 383, Manama, Bahrain; P.O. Box 785, City Centre Building, Government Avenue, Manama, Bahrain; Business Registration Document # 54514–1 (Bahrain) expires 9 Jun 2009; Trade License No. 13388 (Bahrain); All branches worldwide [NPWMD]

G A ARDMORE PTE. LTD., 3 Shenton Way, 10–01 Shenton House, Singapore 068805, Singapore; 101 Cecil Street, 08–08 Tong Eng Building, Singapore 069533, Singapore [BURMA] [JADE]

G A ARDMORE PTE. LTD., 3 Shenton Way, #10–01 Shenton House, Singapore 068805, Singapore [BURMA]

G A CAPITAL PTE. LTD., 101 Cecil Street, 08–08 Tong Eng Building, Singapore 069533, Singapore [JADE] [BURMA]

G A CAPITAL PTE. LTD., 3 Shenton Way, #10–01 Shenton House, Singapore 068805, Singapore [BURMA]

G A FOODSTUFFS PTE. LTD., 101 Cecil Street, 08–08 Tong Eng Building, Singapore 069533, Singapore [BURMA] [JADE]

G A FOODSTUFFS PTE. LTD., 3 Shenton Way, #10–01 Shenton House, Singapore 068805, Singapore [BURMA]

G A LAND PTE. LTD., 3 Shenton Way, #10–01 Shenton House, Singapore 068805, Singapore [BURMA]

G A LAND PTE. LTD., 1 Scotts Road, 21–07/08 Shaw House, Singapore 228208, Singapore [BURMA] [JADE]

G A RESORT PTE. LTD., 3 Shenton Way, 10–01 Shenton House, Singapore 068805, Singapore; 1 Scotts Road, 21–07 Shaw House, Singapore 228208, Singapore [BURMA] [JADE]

G A RESORT PTE. LTD., 3 Shenton Way, #10–01 Shenton House, Singapore 068805, Singapore [BURMA]

G A SENTOSA PTE. LTD., 101 Cecil Street, 08–08 Tong Eng Building, Singapore 069533, Singapore [BURMA] [JADE]

G A SENTOSA PTE. LTD., 3 Shenton Way, #10–01 Shenton House, Singapore 068805, Singapore [BURMA]

G A TREASURE PTE. LTD., 3 Shenton Way, 10–01 Shenton House, Singapore 068805, Singapore [BURMA] [JADE]

G A TREASURE PTE. LTD., 3 Shenton Way, #10–01 Shenton House, Singapore 068805, Singapore [BURMA]

G A WHITEHOUSE PTE. LTD., 3 Shenton Way, #10–01 Shenton House, Singapore 068805, Singapore [BURMA]

G A WHITEHOUSE PTE. LTD., 3 Shenton Way, 10–01 Shenton House, Singapore 068805, Singapore [BURMA] [JADE]

G M C GRUPO MAQUILACION COLOMBIANO, Carrera 66A No. 48–91, Bogota, Colombia; Calle 68B No. 105F–80, Bogota, Colombia; NIT # 41322501 (Colombia) [SDNT]

G.L.G. S.A. (a.k.a. CASA ESTRELLA), Carrera 65 No. 71–74, Barranquilla, Colombia; Centro Comercial Chipichape, Cali, Colombia; Apartado Aereo 250752, Bogota, Colombia; Centro Comercial Unicentro, Local 1–13, Bogota, Colombia; Centro Comercial Unicentro, Local 209, Cali, Colombia; Avenida 15 No. 123–30, Local 1–13, Bogota, Colombia; Calle 53 No. 25–30, Bogota, Colombia; Centro Comercial Galerias, Bogota, Colombia; Calle 164 No. 40–40, Bogota, Colombia; Diagonal 127A No. 17–34 Piso 5, Bogota, Colombia; NIT # 800023807–8 (Colombia) [SDNT]

GAD S.A., Factoria La Rivera, La Union, Valle, Colombia; NIT # 821002971–4 (Colombia) [SDNT]

GAJIC-MILOSEVIC, Milica; DOB 1970; daughter-in-law of Slobodan Milosevic (individual) [BALKANS]

GALAPAGOS S.A, Calle 24N No. 6AN–15, Cali, Colombia; Carrera 115 No. 16B–121, Cali, Colombia; NIT # 800183712–2 (Colombia) [SDNT]

GALAVIZ CORPORATION, LTD., 7801 NW 37 Street No. 152059, Miami, FL 33166; Nassau, Bahamas, The; Avenida 4 Norte 6N–67 Of. 705, Cali, Colombia [SDNT]

GALAX TRADING CO., LTD. (a.k.a. GALAX INC.), 5250 Ferrier Street, Montreal, Quebec, Canada [CUBA]

GALEANO CUBILLOS, Mario Nelson, c/o TERAPIAS VETERINARIA LIMITADA, Bogota, Colombia; Cedula No. 17125384 (Colombia); Passport 17125384 (Colombia) (individual) [SDNT]

GALEANO RESTREPO, Diego Mauro, c/o INVERSIONES EL MOMENTO S.A., Medellin, Colombia; c/o INVERSIONES LICOM LTDA., Medellin, Colombia; c/o CASA DEL GANADERO S.A., Medellin, Colombia; c/o ADMINISTRADORA GANADERA EL 45 LTDA., Medellin, Colombia; c/o GANADERIA LUNA HERMANOS LTDA., Medellin, Colombia; DOB 17 Mar 1976; POB Medellin, Colombia; Cedula No. 98626113 (Colombia) (individual) [SDNT]

GALERIA DE PORTALES, S.A., Miguel Yuste 48, 28037 Madrid, Spain; Jose Serrano 166, 28019 Madrid, Spain; C.I.F. A82464934 (Spain) [SDNT]

GALERIA PAGE (a.k.a. GALERIA PAGE I), 899 Calle Regimento Pirebebuy, Ciudad del Este, Paraguay [SDGT]

GALIC, Stanislav; DOB 12 Mar 1943; POB Goles, Bosnia-Herzegovina; ICTY indictee (individual) [BALKANS]

GALINDO HERRERA, Diana Paola, c/o INMOBILIARIA GALES LTDA., Bogota, Colombia; c/o INVERSIONES HERREBE LTDA., Cali, Colombia; c/o COMERCIAL DE NEGOCIOS CLARIDAD Y CIA., Bogota, Colombia; c/o CONSTRUEXITO S.A., Cali, Colombia; c/o AGROPECUARIA Y REFORESTADORA HERREBE LTDA., Cali, Colombia; c/o INDUSTRIA AVICOLA PALMASECA S.A., Cali, Colombia; c/o COMERCIALIZADORA EXPERTA Y CIA. S. EN C., Bogota, Colombia; DOB 8 Jul 1978; Cedula No. 31538790 (Colombia); Passport AF127300 (Colombia) (individual) [SDNT]

GALINDO HERRERA, Diego Alexander, c/o INMOBILIARIA GALES LTDA., Bogota, Colombia; c/o CONSTRUEXITO S.A., Cali, Colombia; c/o COMERCIAL DE NEGOCIOS CLARIDAD Y CIA., Bogota, Colombia; c/o INDUSTRIA AVICOLA PALMASECA S.A., Cali, Colombia; c/o INVERSIONES HERREBE LTDA., Cali, Colombia; c/o AGROPECUARIA Y REFORESTADORA HERREBE LTDA., Cali, Colombia; c/o COMERCIALIZADORA EXPERTA Y CIA. S. EN C., Bogota, Colombia; DOB 9 Feb 1977; Cedula No. 16836449 (Colombia); Passport AF246678 (Colombia) (individual) [SDNT]

GALINDO LEYVA, Esperanza, 536 Huerto Place, Chula Vista, CA 91910; 950 Norella Street, Chula Vista, CA 91910; c/o INMOBILIARIA LA PROVINCIA S.A. DE C.V., Tijuana, Baja California, Mexico; c/o COMPLEJO TURISTICO OASIS, S.A. de C.V., Playas de Rosarito, Rosarito, Baja California, Mexico; c/o PLAYA MAR S.A. DE C.V., Tijuana, Baja California, Mexico; DOB 16 Aug 1920; POB San Ignacio, Sinaloa, Mexico; Passport 99020017901 (Mexico); R.F.C. # GALE–200816–6IA (Mexico); alt. R.F.C. # GALE–241004–61A (Mexico) (individual) [SDNTK]

GALINDO, Gilmer Antonio (a.k.a. GUZMAN TRUJILLO, Carlos Arturo), c/o COMERCIAL DE NEGOCIOS CLARIDAD Y CIA., Bogota, Colombia; c/o COMERCIALIZADORA EXPERTA Y CIA. S. EN C., Bogota, Colombia; c/o CONSTRUEXITO S.A., Cali, Colombia; Carrera 4C No. 53–40 apt. 307, Cali, Colombia; c/o INDUSTRIA AVICOLA PALMASECA S.A., Cali, Colombia; c/o INMOBILIARIA GALES LTDA., Bogota, Colombia; DOB 28 Dec 1948; Cedula No. 16245188 (Colombia); Passport AC824879 (Colombia) (individual) [SDNT]

GALLASTEGUI SODUPE, Lexuri; DOB 18 Jun 1969; POB Bilbao Vizcaya Province, Spain; D.N.I. 16.047.113; Member ETA (individual) [SDGT]

GALLEGO CANO, Juan de la Cruz, c/o GAVIOTAS LTDA., Cartago, Valle, Colombia; Carrera 3 No. 6–39, El Aguila, Valle, Colombia; DOB 26 Feb 1956; POB El Aguila, Valle, Colombia; citizen Colombia; nationality Colombia; Cedula No. 6272570 (Colombia); Passport AF200504 (Colombia) (individual) [SDNT]

GALLEGO RAMOS, Luis Alfredo, Calle 83 No. 14–130, Cali, Colombia; c/o INTERCONTINENTAL DE AVIACION S.A., Bogota, Colombia; c/o AEROVIAS ATLANTICO LTDA., Bogota, Colombia; c/o GREEN ISLAND S.A., Bogota, Colombia; c/o AEROCOMERCIAL ALAS DE COLOMBIA LTDA., Bogota, Colombia; DOB 7 Aug 1954; POB Cali, Colombia; Cedula No. 16585721 (Colombia); Passport 16585721 (Colombia); alt. Passport AF783512 (Colombia); alt. Passport AE187469 (Colombia) (individual) [SDNT]

GALLEGO RUBIO, Maribel (a.k.a. ''MARITZA''; a.k.a. ''MERY''), Colombia; DOB 09 Apr 1984; POB Acacias, Meta, Colombia; citizen Colombia; nationality Colombia; Cedula No. 30946062 (Colombia); Passport AJ834783 (Colombia) (individual) [SDNTK]

GALLEGO SOSSA, Rosa Esperanza, c/o CONSTRUCTORA DIMISA LTDA., Cali, Colombia; Calle 24AN No. 42BN–61, Cali, Colombia; c/o CONCRETOS CALI S.A., Cali, Colombia; DOB 1 May 1963; Cedula No. 43059188 (Colombia) (individual) [SDNT]

GALLEGO VALENCIA, John Jairo (a.k.a. ''DON JOTA''; a.k.a. ''FREDERICO''), c/o LAVADERO EL CASTILLO, Medellin, Colombia; DOB 30 Jul 1950; POB Medellin, Colombia; Cedula No. 70126377 (Colombia); Passport AC312064 (Colombia) (individual) [SDNT]

GALLO IMPORT, Panama [CUBA]

GALVEZ RODRIGUEZ, Luz Marina, c/o PRODUCTOS GALO Y CIA. LTDA., Bogota, Colombia; c/o REPRESENTACIONES Y DISTRIBUCIONES HUERTAS Y ASOCIADOS S.A., Bogota, Colombia; DOB 15 Mar 1953; Cedula No. 41589020 (Colombia); Passport 41589020 (Colombia) (individual) [SDNT]

GALVEZ RODRIGUEZ, Nancy, c/o COSMEPOP, Bogota, Colombia; c/o DISTRIBUIDORA DE DROGAS CONDOR S.A., Bogota, Colombia; c/o CAJA SOLIDARIA, Bogota, Colombia; c/o COOPCREAR, Bogota, Colombia; c/o COPSERVIR LTDA., Bogota, Colombia; DOB 2 Dec 1954; Cedula No. 41703406 (Colombia); Passport 41703406 (Colombia) (individual) [SDNT]

GAMA'A AL-ISLAMIYYA (a.k.a. AL-GAMA'AT; a.k.a. EGYPTIAN AL-GAMA'AT AL-ISLAMIYYA; a.k.a. GI; a.k.a. IG; a.k.a. ISLAMIC GAMA'AT; a.k.a. ISLAMIC GROUP) [SDT] [FTO] [SDGT]

GAMBA SANCHEZ, Fernando, c/o DISTRIBUIDORA DE DROGAS CONDOR S.A., Bogota, Colombia; DOB 3 Nov 1962; Cedula No. 19494919 (Colombia) (individual) [SDNT]

GAMBE, Theophilus Pharaoh; DOB 20 Jun 1959; Passport ZA567403 (Zimbabwe); Chairman, Electoral Supervisory Commission (individual) [ZIMBABWE]

GAMBIA NEW MILLENIUM AIR COMPANY (a.k.a. GAMBIA MILLENIUM AIRLINE; a.k.a. GAMBIA NEW MILLENIUM AIR), State House, Banjul, Gambia, The [LIBERIA]

GAMEZ CIFUENTES, Norma Lucero, c/o DROCARD S.A., Bogota, Colombia; DOB 22 Jan 1958; Cedula No. 41674484 (Colombia); Passport 41674484 (Colombia) (individual) [SDNT]

GAMEZ, Gilberto, c/o ARCA DISTRIBUCIONES LTDA., Bogota, Colombia; Cedula No. 79846794 (Colombia) (individual) [SDNT]

GANADERIA ARIZONA, Hacienda Arizona, Caucasia, Antioquia, Colombia; Carrera 43A No. 1 Sur-188 of. 903, Medellin, Colombia; NIT # 10026001–7 (Colombia) [SDNT]

GANADERIA EL VERGEL LTDA., Carrera 4 No. 12–20 of. 206, Cartago,Valle, Colombia; Km 7 Via Cartago-Obando, Hacienda El Vergel, Cartago, Valle, Colombia; NIT # 800146295–5 (Colombia) [SDNT]

GANADERIA LUNA HERMANOS LTDA., Carrera 49 No. 61Sur-540, Medellin, Colombia; Carrera 49A No. 48S–60 Bod. 102, Medellin, Colombia; NIT # 811045931–8 (Colombia) [SDNT]

GANADERIAS BILBAO LTDA., Carrera 4 No. 12–20 of. 206, Cartago, Valle, Colombia; Km 7 Via Cartago-Obando, Hacienda El Vergel, Cartago, Valle, Colombia; NIT # 800146290–9 (Colombia) [SDNT]

GANADERIAS DEL VALLE S.A., Avenida 2FN No. 24N–92, Cali, Colombia; Carrera 83 No. 6–50, Cali, Colombia; Carrera 61 No. 11–58, Cali, Colombia; NIT # 800119808–9 (Colombia) [SDNT]

GARAVITO, Doris Amelia, c/o GALAPAGOS S.A., Cali, Colombia; Cedula No. 31233463 (Colombia) (individual) [SDNT]

GARCES VARGAS, Elmo, c/o INVERSIONES EL PENON S.A., Cali, Colombia; c/o INVERSIONES BETANIA LTDA., Cali, Colombia; c/o SOCOVALLE, Cali, Colombia; DOB 20 Jul 1953; Cedula No. 16581793 (Colombia) (individual) [SDNT]

GARCIA ALBERT, Maria Remedios (a.k.a. ''IRENE''; a.k.a. ''SORAYA''), Spain; DOB 17 Feb 1951; POB Avila, Spain; D.N.I. 00263695-T (Spain); International FARC Commission Member for Spain (individual) [SDNTK]

GARCIA BUITRAGO, Miyer Alberto (a.k.a. ''CHIQUI''); DOB 13 Jul 1970; POB Manzanares, Caldas, Colombia; Cedula No. 10287969 (Colombia); Passport AH132212 (Colombia) (individual) [SDNT]

GARCIA DE LA FUENTE ARRIAGA, Ignacio, c/o CUSTOMER NETWORKS S.L., Madrid, Spain; c/o GALERIA DE PORTALES S.A., Madrid, Spain; c/o SOCIEDAD INVERSORA EN PROYECTOS DE INTERNET S.A., Madrid, Spain; D.N.I. 27340558-K (Spain) (individual) [SDNT]

GARCIA DUQUE, Gustavo, Carrera 4 No. 12–20 of. 206, Cartago, Valle, Colombia; c/o INMOBILIARIA LINARES LTDA., Cartago, Valle, Colombia; c/o INMOBILIARIA EL ESCORIAL LTDA., Cartago, Valle, Colombia; DOB 30 Jun 1961; Cedula No. 16213736 (Colombia); Passport 16213736 (Colombia) (individual) [SDNT]

GARCIA DURAN, Maria Del Rosario, c/o DISTRIBUIDORA DE HERMOSILLO GAXIOLA HERMANOS S.A. DE C.V., Hermosillo, Sonora, Mexico; c/o MOLDURAS DEL NOROESTE S.A. DE C.V., Hermosillo, Sonora, Mexico; Preferico Poniente, Calle Simon Bleyy Manuel I. Loaiza, Colonia Olivaries, Hermosillo, Sonora, Mexico; c/o COPA DE PLATA S.A. DE C.V., Culiacan, Sinaloa, Mexico; c/o DISTRIBUIDORA GRAN AUTO S.A. DE C.V., Hermosillo, Sonora, Mexico; Calle Uvalama 19 Esq., Blvd Sabinos, Hermosillo, Sonora, Mexico; Alamos 40, Colonia Modelo, Hermosillo, Sonora, Mexico; c/o FLETES Y TRANSPORTES GAXGAR S.A. DE C.V., Hermosillo, Sonora, Mexico; c/o MINERA LA CASTELLANA Y ANEXAS S.A. DE C.V., Culiacan, Sinaloa, Mexico; Av. Uvalama 15, Hermosillo, Sonora, Mexico; c/o MINERA RIO PRESIDIO S.A. DE C.V., Culiacan, Sinaloa, Mexico; Ave Eduardo Villa 333, Col Oliv., Hermosillo, Sonora, Mexico; c/o COMPANIA MINERA DEL RIO CIANURY S.A. DE C.V., Culiacan, Sinaloa, Mexico; Prop. Priv y Bldg G. Escoboza, Hermosillo, Sonora, Mexico; c/o TEMPLE DEL PITIC S.A. DE C.V., Hermosillo, Sonora, Mexico; c/o INMOBILIARIA GAXIOLA HERMANOS S.A. DE C.V., Hermosillo, Sonora, Mexico; Calle Clavel No. 1406, Esquina con Calle Rosa, Colonia Margarita, Culiacan, Sinaloa, Mexico; Calle Zaragoza No. 166–2, al Poniente de la Col. Centro, Culiacan, Sinaloa, Mexico; c/o GRUPO INDUSTRIAL GAXIOLA HERMANOS S.A. DE C.V., Hermosillo, Sonora, Mexico; Uvalama 15 y Sabinos, Col Sabin, Hermosillo, Sonora, Mexico; Rafael Campoy #307, Colonia Pitic, Hermosillo, Sonora, Mexico; Calle de Anza Numero 210, Colonia Pitic, Hermosillo, Sonora, Mexico; DOB 12 Sep 1953; POB Culiacan, Sinaloa, Mexico; citizen Mexico; nationality Mexico; R.F.C. GADR521211 (Mexico); alt. R.F.C. GADR530912 (Mexico) (individual) [SDNTK]

GARCIA GARCIA, Gabriel Alfonso, c/o AGRICOLA DOIMA DEL NORTE DEL VALLE LTDA., Cartago, Valle, Colombia; c/o GANADERIAS BILBAO LTDA., Cartago, Valle, Colombia; c/o GANADERIA EL VERGEL LTDA., Cartago, Valle, Colombia; Carrera 4 No. 12–20 of. 206, Cartago, Valle, Colombia; DOB 7 Jun 1976; Cedula No. 16230989 (Colombia); Passport 16230989 (Colombia) (individual) [SDNT]

GARCIA MOLINA, Gener (a.k.a. ''GUTIERREZ, Jhon''; a.k.a. ''HERNANDEZ, John''; a.k.a. ''JHON 40''; a.k.a. ''JOHN 40''; a.k.a. ''JOHNNY 40''); DOB 23 Aug 1963; POB San Martin, Meta, Colombia; Cedula No. 17353242 (Colombia) (individual) [SDNTK]

GARCIA MONTILLA, Edgar Alberto (a.k.a. GARCIA MANTILLA, Edgar Alberto; a.k.a. GARCIA MOGAR, Edgar; a.k.a. GARCIA MONTELLA, Edgar Alberto), c/o COMERCIALIZACION Y FINANCIACION DE AUTOMOTORES S.A., Cali, Colombia; c/o REVISTA DEL AMERICA LTDA., Cali, Colombia; c/o LABORATORIOS KRESSFOR DE COLOMBIA S.A., Bogota, Colombia; DOB 28 Nov 1946; Cedula No. 14936775 (Colombia); Passport AC365457 (Colombia); alt. Passport PE008603 (Colombia); alt. Passport AA294885 (Colombia); alt. Passport PO564495 (Colombia) (individual) [SDNT]

GARCIA PIZARRO, Gentil Velez, c/o GALAPAGOS S.A., Cali, Colombia; Cedula No. 6616986 (Colombia) (individual) [SDNT]

GARCIA RODRIGUEZ, Martha, c/o TRANSPORTES MICHAEL LTDA.,

Barranquilla, Colombia; c/o COOPERATIVA DE SERVICIO DE TRANSPORTE DE CARGA DE COLOMBIA LTDA., Barranquilla, Colombia; c/o CENTRO DE BELLEZA SHARY VERGARA, Barranquilla, Colombia; POB Colombia; Cedula No. 32761805 (Colombia) (individual) [SDNT]

GARCIA ROMERO, Audra Yamile, c/o INVHERESA S.A., Cali, Colombia; c/o ALKALA ASOCIADOS S.A., Cali, Colombia; DOB 23 Jul 1971; Cedula No. 66765096 (Colombia) (individual) [SDNT]

GARCIA VARELA, Luis Fernando,, c/o TAURA S.A., Cali, Colombia; Cedula No. 16282923 (Colombia) (individual) [SDNT]

GARCIA VASQUEZ, Omaira, Avenida 2 Norte No. 2N–36, Edif. Campanari Ofc. 340, Cali, Colombia; c/o UNIDAS S.A., Cali, Colombia; c/o FINVE S.A., Bogota, Colombia; DOB 26 Jan 1961; POB Cali, Valle, Colombia; Cedula No. 31870497 (Colombia); Passport 31870497 (Colombia) (individual) [SDNT]

GARCIA, Daniel, Avenida Insurgentes Sur No. 421, Bloque B Despacho 404, C.P. 06100, Mexico, D.F., Mexico; Manager, Promociones Artisticas (PROARTE) (individual) [CUBA]

GARCIA, Freddy (a.k.a. GARCIA, Fredy), Calle 11 No. 1–07 of. 405, Cali, Colombia; c/o PROCESADORA DE POLLOS SUPERIOR S.A., Cali, Colombia; c/o COMERCIALIZADORA INTERNACIONAL VALLE DE ORO S.A., Cali, Colombia; Cedula No. 79376230 (Colombia) (individual) [SDNT]

GARZON RESTREPO, Juan Leonardo, c/o DISTRIBUIDORA MYRAMIREZ S.A., Cali, Colombia; c/o LABORATORIOS GENERICOS VETERINARIOS DE COLOMBIA S.A., Bogota, Colombia; c/o ALFA PHARMA S.A., Bogota, Colombia; Carrera 7P No. 76–90, Cali, Colombia; c/o LABORATORIOS KRESSFOR DE COLOMBIA S.A., Bogota, Colombia; c/o VALORES MOBILIARIOS DE OCCIDENTE S.A., Bogota, Colombia; c/o FARMATODO S.A., Bogota, Colombia; c/o PENTACOOP LTDA., Bogota, Colombia; Diagonal 53 No. 38A–20 apt. 103, Bogota, Colombia; c/o BLANCO PHARMA S.A., Bogota, Colombia; c/o PENTA PHARMA DE COLOMBIA S.A., Bogota, Colombia; c/o DROGAS LA REBAJA, Cali, Colombia; c/o INVERSIONES ARA LTDA., Cali, Colombia; DOB 14 Jan 1962; Cedula No. 16663709 (Colombia) (individual) [SDNT]

GASHI, Sabit; DOB 30 Dec 1967; POB Suva Reka, Serbia and Montenegro (individual) [BALKANS]

GASMI, Salah (a.k.a. ''BOUNOUADHER''; a.k.a. ''SALAH ABU MOHAMED''; a.k.a. ''SALAH ABU MUHAMAD''); DOB 13 Apr 1971; POB Zeribet El Oued, Biskra, Algeria (individual) [SDGT]

GASOLINERAS SAN FERNANDO S.A. DE C.V., Ciudad Camargo, Chihuahua, Mexico; Avenida 3A y Calle Mina, Colonia Centro, Saucillo, Chihuahua, Mexico [SDNTK]

GAVIOTAS LTDA. (a.k.a. HOTEL SIN PECADOS; a.k.a. MOTEL CAMPO AMOR; a.k.a. ''HOTEL SIN PK2''), Calle 4A No. 21–34 Circunvalar, Cartago, Valle, Colombia; NIT # 800032092–7 (Colombia) [SDNT]

GAVIRIA DE MOR, Liliana, c/o MOR ALFOMBRAS ALFOFIQUE S.A., Bogota, Colombia; c/o CONSTRUCTORA AMERICA S.A., Bogota, Colombia; c/o DURATEX S.A., Bogota, Colombia; c/o GAVIRIA MOR Y CIA. LTDA., Girardot, Colombia; c/o MOR GAVIRIA S.C.S., Bogota, Colombia; DOB 16 Mar 1965; POB Bogota, Colombia; Cedula No. 20621292 (Colombia); Passport AG443233 (Colombia) (individual) [SDNT]

GAVIRIA MOR Y CIA. LTDA., Calle 16 No. 11–82 Ofc. 302, Girardot, Colombia; NIT # 800212771–2 (Colombia) [SDNT]

GAVIRIA PRICE, Juan Pablo, c/o CRIADERO LA LUISA E.U., Cali, Colombia; Carrera 4 No. 11–33 Ofc. 710, Cali, Colombia; DOB 09 Jul 1960; POB Cali, Valle, Colombia; Cedula No. 16639081 (Colombia); Passport 16639081 (Colombia) (individual) [SDNT]

GAVIRIA RUEDA, Gloria Ines (a.k.a. GAVIRIA DE INDABURU, Gloria Ines), c/o INTERNACIONAL DE PROYECTOS INMOBILIARIOS S.A., Quito, Ecuador; c/o COMERCIALIZADORA MOR GAVIRIA S.A., Quito, Ecuador; POB Colombia; Cedula No. 1719011601 (Ecuador); alt. Cedula No. 41576358 (Colombia); RUC # 1233779 (Ecuador) (individual) [SDNT]

GAXIOLA GARCIA, Carlos Alberto, Avenida Raul Campoy Numero 307, Colonia Pitic, Hermosillo, Sonora, Mexico; Calles Olivares y Eduardo W. Villa, Hermosillo, Sonora, Mexico; c/o INMUEBLES SIERRA VISTA S.A. DE C.V., Hermosillo, Sonora, Mexico; Calle Angel Garcia Aburto No. 62, Col. Loma Linda, Hermosillo, Sonora, Mexico; c/o DISTRIBUIDORA GRAN AUTO S.A. DE C.V., Hermosillo, Sonora, Mexico; DOB 02 Mar 1978; POB Hermosillo, Sonora, Mexico; citizen Mexico; nationality Mexico; C.U.R.P. GAGC780302HSRXRR00 (Mexico); R.F.C. GAGC780302H75 (Mexico) (individual) [SDNTK]

GAXIOLA GARCIA, Maria Elena, Priv. Bugambilia 55, Colonia Bugambilia, Hermosillo, Sonora, Mexico; Rafael Campoy Num 307, Hermosillo, Sonora, Mexico; Calle Rafael Campoy No. 305, Col. Pitic, Hermosillo, Sonora, Mexico; c/o DISTRIBUIDORA GRAN AUTO S.A. DE C.V., Hermosillo, Sonora, Mexico; c/o INMOBILIARIA GAXIOLA HERMANOS S.A. DE C.V., Hermosillo, Sonora, Mexico; DOB 18 Aug 1975; POB Culiacan, Sinaloa, Mexico; alt. POB Arizpe, Sonora, Mexico; citizen Mexico; nationality Mexico; C.U.R.P. GAGE750818MSLXRL11 (Mexico); alt. C.U.R.P. GAGE750818MSLXRL03 (Mexico); R.F.C. GAGE350904 (Mexico); alt. R.F.C. GAGE680511 (Mexico); alt. R.F.C. GAGE750818L66 (Mexico) (individual) [SDNTK]

GAXIOLA GARCIA, Rigoberto, Calle de Anza Numero 210, Colonia Pitic, Hermosillo, Sonora, Mexico; Avenida de Anza #210, Colonia Pitic, Hermosillo, Sonora, Mexico; c/o FLETES Y TRANSPORTES GAXGAR S.A. DE C.V., Hermosillo, Sonora, Mexico; c/o TEMPLE DEL PITIC S.A. DE C.V., Hermosillo, Sonora, Mexico; Avenida Adolfo de la Huerta 401, Colonia Pitic, Hermosillo, Sonora, Mexico; Rafael Campoy #307, Pitic, Hermosillo, Sonora, Mexico; Calle Clavel No. 1406, Esquina con Calle Rosa, Colonia Margarita, Culiacan, Sinaloa, Mexico; c/o MINERA LA CASTELLANA Y ANEXAS S.A. DE C.V., Culiacan, Sinaloa, Mexico; c/o INMOBILIARIA GAXIOLA HERMANOS S.A. DE C.V., Hermosillo, Sonora, Mexico; Uvalama No. 19, Col Los Sabinos, Hermosillo, Sonora, Mexico; c/o MOLDURAS DEL NOROESTE S.A. DE C.V., Hermosillo, Sonora, Mexico; c/o MINERA RIO PRESIDIO S.A. DE C.V., Culiacan, Sinaloa, Mexico; Alamos No. 42, Colonia Modelo, Hermosillo, Sonora, Mexico; c/o AGRICOLA GAXIOLA S.A. DE C.V., Hermosillo, Sonora, Mexico; Calles Olivares y Eduardo W. Villa, Colonia Olivares, Hermosillo, Sonora, Mexico; Ave Colonizadores 830, Hermosillo, Sonora, Mexico; c/o DISTRIBUIDORA DE HERMOSILLO GAXIOLA HERMANOS S.A. DE C.V., Hermosillo, Sonora, Mexico; c/o GRUPO INDUSTRIAL GAXIOLA HERMANOS S.A. DE C.V., Hermosillo, Sonora, Mexico; c/o INMUEBLES SIERRA VISTA S.A. DE C.V., Hermosillo, Sonora, Mexico; c/o DISTRIBUIDORA GRAN AUTO S.A. DE C.V., Hermosillo, Sonora, Mexico; c/o COPA DE PLATA S.A. DE C.V., Culiacan, Sinaloa, Mexico; DOB 25 Jan 1973; alt. DOB 26 Jan 1973; POB CULIACAN, SINALOA, MEXICO; citizen Mexico; nationality Mexico; C.U.R.P. GAGR730125HSLXRG08 (Mexico); R.F.C. GAGR730125DC9 (Mexico); alt. R.F.C. GACR730125 (Mexico); alt. R.F.C. GAGP730125 (Mexico) (individual) [SDNTK]

GAXIOLA MEDINA, Rigoberto (a.k.a. MEDINA SAENZ, Enrique; a.k.a. MORALES GUERRERO, Juan Antonio; a.k.a. SAENZ MEDINA, Enrique), Hermosillo, Sonora, Mexico; Calle Clavel No. 1406, Colonia Margarita, Culiacan, Sinaloa, Mexico; DOB 27 Sep 1950; POB Sinaloa, Mexico; citizen Mexico; nationality Mexico; R.F.C. GAMR–501027 (Mexico) (individual) [SDNTK]

GBS TRADING S.A., Carrera 85 No. 15–110, Cali, Colombia; NIT # 805026824–5 (Colombia) [SDNT]

GEIGES, Daniel; DOB 25 Jan 1938; POB Lachen, Switzerland; nationality Switzerland; Passport 8071366 (Switzerland) (individual) [NPWMD]

GELOWICZ, Fritz Martin (a.k.a. GEBERT, Markus; a.k.a. GELOWICZ, Abdullah; a.k.a. GELOWICZ, Fritz Martin Abdullah; a.k.a. GELOWITZ, Fritz Martin Abdullah; a.k.a. KONARS, Robert; a.k.a. ''BENZL''), Boefinger Weg 20, Ulm 89075, Germany; Eberhardstrasse 70, Ulm 89073, Germany; DOB 1 Sep 1979; alt. DOB 10 Apr 1979; POB Munich, Germany; alt. POB Liege, Belgium; citizen Germany; Passport 7020069907 (Germany); Personal ID Card 7020783883; currently incarcerated at Stuttgart-Stammheim, Germany (individual) [SDGT]

GEMEX AUSSENHANDELS GMBH, Hanauer Landstr. 126–128, D–6000, Frankfurt am Main 1, Germany [CUBA]

GENERAL DE NEGOCIOS Y ADMINISTRACION LTDA. (a.k.a. GENEGA LTDA.), Calle 10 No. 4–47 piso 18, Cali, Colombia; Carrera 3 No. 11–32 of. 939,

Cali, Colombia; NIT # 805006744–9 (Colombia) [SDNT]
GENERICOS ESPECIALES S.A. (a.k.a. GENES S.A.), Carrera 42C No. 22C–36, Bogota, Colombia; NIT # 830050661–3 (Colombia) [SDNT]
GEOPLASTICOS S.A. (f.k.a. COLOMBIANA DE BOLSAS S.A.), Calle 24 No. 4–31, Cali, Colombia; NIT # 890931876–9 (Colombia) [SDNT]
GERENCIA DE PROYECTOS Y SOLUCIONES LTDA., Avenida 13 No. 100–12 Ofc. 302, Bogota, Colombia; NIT # 800231600–2 (Colombia) [SDNT]
GESTORA MERCANTIL S.A., Avenida 7 Norte No. 23N–81, Cali, Colombia; Avenida 7 Norte No. 23–77, Cali, Colombia; NIT # 800154869–6 (Colombia) [SDNT]
GEX EXPLORE S. DE R.L. DE C.V., Avenida David Alfaro Siqueiros 2789–102, Colonia Zona Rio, Tijuana, Baja California, Mexico; Avenida David Alfaro 25, CP 22320, Tijuana, Baja California, Mexico; Calle Nezahualcoyotyl No. 1660, CP 22320, Colonia Zona Rio, Tijuana, Baja California, Mexico [SDNTK]
GEZIRA TANNERY, Gezira, Sudan [SUDAN]
GEZIRA TRADE & SERVICES COMPANY LIMITED, P.O. Box 215, Khartoum, Sudan; Gedarit, Sudan; Kosti, Sudan; Juba, Sudan; P.O. Box 17, Port Sudan, Sudan; El Obeid, Sudan; Sennar, Sudan; Wad Medani, Sudan [SUDAN]
GHAILANI, Ahmed Khalfan (a.k.a. AHMAD, Abu Bakr; a.k.a. ''AHMED THE TANZANIAN''; a.k.a. AHMED, A.; a.k.a. AHMED, Abubakar; a.k.a. AHMED, Abubakar K.; a.k.a. AHMED, Abubakar Khalfan; a.k.a. AHMED, Abubakary K.; a.k.a. AHMED, Ahmed Khalfan; a.k.a. AL TANZANI, Ahmad; a.k.a. ALI, Ahmed Khalfan; a.k.a. BAKR, Abu; a.k.a. ''FOOPIE''; a.k.a. ''FUPI''; a.k.a. GHAILANI, Abubakary Khalfan Ahmed; a.k.a. GHAILANI, Ahmed; a.k.a. GHILANI, Ahmad Khalafan; a.k.a. HUSSEIN, Mahafudh Abubakar Ahmed Abdallah; a.k.a. KHABAR, Abu; a.k.a. KHALFAN, Ahmed; a.k.a. MOHAMMED, Shariff Omar); DOB 14 Mar 1974; alt. DOB 14 Apr 1974; alt. DOB 1 Aug 1970; alt. DOB 13 Apr 1974; POB Zanzibar, Tanzania; citizen Tanzania (individual) [SDGT]
GHALIB, Nayif Shindakh Thamir; nationality Iraq; Ba'th party regional command chairman, an-Najaf; member; Iraqi National Assembly (individual) [IRAQ2]
GHANI, Mohammad Nadeem (a.k.a. GHANI, Mohamed Nadim), c/o ZULEKHA GENERAL TRADING LLC, Ajman, United Arab Emirates; United Kingdom; citizen United Kingdom; Passport 093055372 (United Kingdom) (individual) [SDNTK]
GHARARGAHE SAZANDEGI GHAEM (a.k.a. GHARARGAH GHAEM), No. 25, Valiasr St., Azadi Sq., Tehran, Iran [NPWMD]
GHARIB, Fadil Mahmud (a.k.a. AL-MASHAIKHI, Gharib Muhammad Fazel); DOB 1944; POB Dujail, Iraq; nationality Iraq; Ba'th party regional command chairman, Babil; chairman, General Federation of Iraqi Trade Unions (individual) [IRAQ2]
GHAZALI, Rustum, Syria; DOB circa 1949; nationality Syria; Chief of Syrian Military Intelligence for Lebanon (individual) [SYRIA]
GHORB KARBALA (a.k.a. GHARARGAH KARBALA; a.k.a. GHARARGAH SAZANDEGI KARBALA-MOASSESEH TAHA), No. 2 Firouzeh Alley, Shahid Hadjipour St., Resalat Highway, Tehran, Iran [NPWMD]
GHORB NOOH, P.O. Box 16765–3476, Tehran, Iran [NPWMD]
GIAD AUTOMOTIVE INDUSTRY COMPANY LIMITED (a.k.a. GIAD AUTOMOTIVE AND TRUCK; a.k.a. GIAD AUTOMOTIVE COMPANY; a.k.a. GIAD CARS & HEAVY TRUCKS COMPANY), Gazera State (40 km distance from Khartoum), P.O. Box 444/13600, Khartoum 1111, Sudan; Website www.giadmotors.com/giad_auto.html [SUDAN]
GIAD MOTOR INDUSTRY COMPANY LIMITED (a.k.a. GIAD MOTOR COMPANY), Basheer Mohammad Saeed Building, Baladia Street, P.O. Box 13610, Khartoum, Sudan; Website www.giadmotors.com (Sudan) [SUDAN]
GIAMX LTDA., Calle 80 No. 37–30, Bogota, Colombia; NIT # 830095943–9 (Colombia) [SDNT]
GIBSON, Myrtle; DOB 03 NOV 1952; Former Liberian Senator; advisor to former President of Liberia Charles Taylor (individual) [LIBERIA]
GIL GARCIA, Jose Alejandro, Avenida Ejercito Trigarante 7865-J, Infonavit Cuchanilla 22680, Tijuana, Baja California, Mexico; c/o Farmacia Vida Suprema, S.A. DE C.V., Tijuana, Baja California, Mexico; c/o Administradora De Inmuebles Vida, S.A. de C.V., Tijuana, Baja California, Mexico; c/o ADP, S.C., Tijuana, Baja California, Mexico; Avenida Altabrisa 15401, Fraccionamiento Altabrisa, Otay Universidad, Tijuana, Baja California, Mexico; c/o Distribuidora Imperial De Baja California, S.A. de C.V., Tijuana, Baja California, Mexico; DOB 22 Jan 1952; POB Culiacan, Sinaloa, Mexico; Credencial electoral 103624690069 (Mexico); R.F.C. GIGA–520122 (Mexico) (individual) [SDNTK]
GIL GARZON, Marco Antonio, c/o CONSTRUCTORA AMERICA S.A., Bogota, Colombia; DOB 25 May 1947; POB Toca, Boyaca, Colombia; Cedula No. 17176949 (Colombia) (individual) [SDNT]
GIL GUIO, Alexandra, c/o PROMOCIONES E INVERSIONES LAS PALMAS S.A., Bogota, Colombia; c/o C.I. OTILIA FLOWERS S.A., Cajica, Cundinamarca, Colombia; c/o DURATEX S.A., Bogota, Colombia; c/o CONSTRUCTORA AMERICA S.A., Bogota, Colombia; c/o CONSTRUCTORA IRAKA S.A., Bogota, Colombia; DOB 11 Oct 1973; POB Colombia; Cedula No. 52145376 (Colombia) (individual) [SDNT]
GIL RODRIGUEZ, Ana Maria, c/o AMPARO R. DE GIL Y CIA. S.C.S., Cali, Colombia; c/o DROBLAM S.A., Cali, Colombia; DOB 24 Aug 1978; Cedula No. 67020296 (Colombia); Passport 67020296 (Colombia) (individual) [SDNT]
GIL RODRIGUEZ, Angela Maria, c/o AMPARO R. DE GIL Y CIA. S.C.S., Cali, Colombia; c/o AQUILEA S.A., Cali, Colombia; c/o DROBLAM S.A., Cali, Colombia; DOB 21 Feb 1980; Cedula No. 52721666 (Colombia); Passport 52721666 (Colombia) (individual) [SDNT]
GIL RODRIGUEZ, Juan Felipe, c/o AMPARO R. DE GIL Y CIA. S.C.S., Cali, Colombia; c/o DROBLAM S.A., Cali, Colombia; DOB 7 Apr 1975; Cedula No. 94446642 (Colombia); Passport 94446642 (Colombia) (individual) [SDNT]
GILBOA, Joseph (a.k.a. GIL, Josef; a.k.a. GILBERT, Joseph; a.k.a. GILBOA, Joseph Papzian; a.k.a. GILBOA, Yosef); DOB 8 Apr 1943; POB Israel (individual) [SDNTK]
GILMAN FRANCO, Maria, c/o TAURA S.A., Cali, Colombia; Cedula No. 22103099 (Colombia) (individual) [SDNT]
GIMBER INVESTING CORPORATION, Virgin Islands, British [SDNT]
GIMNASIO BODY AND HEALTH, Calle 80 No. 75–210, Barranquilla, Colombia [SDNT]
GINEID SUGAR FACTORY, P.O. Box 1, Gineid, Sudan [SUDAN]
GIRALDO ARBELAEZ, Fernando, c/o INMOBILIARIA U.M.V. S.A., Cali, Colombia; DOB 27 Nov 1952; Cedula No. 16249351 (Colombia) (individual) [SDNT]
GIRALDO FRANCO, Juan Carlos, Calle 3 Oeste No. 26–12, El Aguila, Valle, Colombia; DOB 10 Jun 1971; Cedula No. 16791184 (Colombia) (individual) [SDNT]
GIRALDO RUBIO, Marleni, c/o MAGEN LTDA., Bogota, Colombia; c/o DISFOGEN LTDA., Bogota, Colombia; Cedula No. 51760752 (Colombia); Passport 51760752 (Colombia) (individual) [SDNT]
GIRALDO SARRIA, Octavio, c/o INMOBILIARIA U.M.V. S.A., Cali, Colombia; DOB 15 Nov 1967; Cedula No. 16281770 (Colombia) (individual) [SDNT]
GIRALDO SARRIA, Rosa Amelia, c/o INMOBILIARIA U.M.V. S.A., Cali, Colombia; DOB 18 Aug 1974; Cedula No. 43821679 (Colombia) (individual) [SDNT]
GIRALDO SERNA, Hernan; DOB 16 Oct 1948; Cedula No. 12531356 (Colombia) (individual) [SDNTK]
GIRALDO VELASCO, Hector Fabio, c/o CRIADERO SANTA GERTRUDIS S.A., Jamundi, Valle, Colombia; DOB 17 Mar 1965; Cedula No. 16711573 (Colombia) (individual) [SDNT]
GLAJAN S.A., Transversal 29 No. 39–92, Bogota, Colombia; NIT # 830023266–2 (Colombia) [SDNT]
GLOBAL FILMS, S.A. DE C.V., Blvd. Fundadores 104–11A, Colonia Valle del Rubi, Tijuana, Baja California, Mexico; R.F.C. GFI–961219–9J4 (Mexico) [SDNTK]
GLOBAL INTERFACE COMPANY INC. (f.k.a. TRANS SCIENTIFIC CORP.), 9F–1, No. 22, Hsin Yi Rd., Sec. 2, Taipei, Taiwan; 1st Floor, No. 49, Lane 280, Kuang Fu S. Road, Taipei, Taiwan; Business Registration Document # 12873346 (Taiwan) [NPWMD]
GLOBAL MARINE OVERSEAS, INC., Panama [CUBA]
GLOBAL RELIEF FOUNDATION, INC. (a.k.a. FONDATION SECOURS MONDIAL A.S.B.L.; a.k.a. FONDATION SECOURS MONDIAL VZW; a.k.a. FONDATION SECOURS MONDIAL 'WORLD RELIEF'; a.k.a. FONDATION SECOURS MONDIAL-BELGIQUE A.S.B.L.; a.k.a. FONDATION SECOURS MONDIAL-KOSOVA; a.k.a. FSM; a.k.a. SECOURS MONDIAL DE FRANCE; a.k.a. STICHTING

WERELDHULP-BELGIE, V.Z.W.), Put Mladih Muslimana Street 30/A, Sarajevo, Bosnia and Herzegovina; House 267 Street No. 54, Sector F–11/4, Islamabad, Pakistan; Jordan; Gaza Strip, undetermined; Rruga e Kavajes, Building No. 3, Apartment No. 61, P.O. Box 2892, Tirana, Albania; Vaatjesstraat, 29, 2580 Putte, Belgium; India; Ingushetia, Russia; 49 rue du Lazaret, 67100 Strasbourg, France; Afghanistan; Chechnya, Russia; China; Georgia; Syria; P.O. Box 6, 1040 Etterbeek 2, Brussels, Belgium; Kashmir, undetermined; Lebanon; West Bank; Mula Mustafe Baseskije Street No. 72, Sarajevo, Bosnia and Herzegovina; Ylli Morina Road, Djakovica, Serbia; Iraq; Rue des Bataves 69, 1040 Etterbeek, Brussels, Belgium; Rr. Skenderbeu 76, Lagjja Sefa, Gjakova, Serbia; Azerbaijan; Bangladesh; Eritrea; Ethiopia; Somalia; Saray Cad. No. 37 B Blok, Yesilyurt Apt. 2/4, Sirinevler, Turkey; Sierra Leone; V.A.T. Number BE 454,419,759 [SDGT]

GLOBAL RELIEF FOUNDATION, INC., P.O. Box 1406, Bridgeview, IL 60455; US FEIN 36–3804626 [SDGT]

GOCHE, Nicholas Tasunungurwa; DOB 1 Aug 1946; Minister of Public Works, Labour and Social Welfare (individual) [ZIMBABWE]

GOGEASCOECHEA ARRONATEGUI, Eneko; DOB 29 Apr 1967; POB Guernica, Vizcaya Province, Spain; D.N.I. 44.556.097 (Spain); Member ETA (individual) [SDGT]

GOIRICELAYA GONZALEZ, Cristina; DOB 23 Dec 1967; POB Vergara, Guipuzcoa Province, Spain; D.N.I. 16.282.556 (Spain); Member ETA (individual) [SDGT]

GOLDEN AARON PTE. LTD., 3 Shenton Way, 10–01, Shenton House, Signapore 068805, Singapore; 101 Cecil Street, 08–08 Tong Eng Building, Singapore 069533, Singapore [JADE] [BURMA]

GOLDEN AARON PTE. LTD., 3 Shenton Way, #10–01 Shenton House, Singapore 068805, Singapore [BURMA]

GOLDEN COMET NAVIGATION CO. LTD., c/o EMPRESA DE NAVEGACION MAMBISA, Apartado 543, San Ignacio 104, Havana, Cuba [CUBA]

GOMEZ ALVAREZ, Sor Teresa, c/o FUNDACION PARA LA PAZ DE CORDOBA, Monteria, Cordoba, Colombia; DOB 27 Jun 1956; POB Amalfi, Antioquia, Colombia; Cedula No. 21446537 (Colombia); Passport 21446537 (Colombia) (individual) [SDNTK]

GOMEZ APONTE, Laura Victoria, Carrera 4A No. 63N–29, Cali, Colombia; c/o LADRILLERA LA CANDELARIA LTDA., Cali, Colombia; DOB 31 Oct 1965; POB Cali, Valle, Colombia; Cedula No. 31937650 (Colombia); Passport 31937650 (Colombia) (individual) [SDNT]

GOMEZ BERRIO, Olmes de Jesus (a.k.a. GOMEZ BERRIO, Holmes de Jesus), Carrera 1 No. 18–52, Cali, Colombia; c/o INVERSIONES Y CONSTRUCCIONES VALLE S.A., Cali, Colombia; c/o INVERSIONES INVERVALLE S.A., Cali, Colombia; DOB 15 Dec 1961; Cedula No. 73105133 (Colombia) (individual) [SDNT]

GOMEZ BUSTAMANTE, Luis Alfonso, Carrera 5 No. 1–82, Obando, Valle, Colombia; Calle 1B No. 1–26, Barrio El Prado, Cartago, Valle, Colombia; c/o GAVIOTAS LTDA., Colombia; DOB 01 Nov 1953; Cedula No. 4451571 (Colombia); Passport 4451571 (Colombia) (individual) [SDNT]

GOMEZ BUSTAMANTE, Luis Hernando, Km 12 Via Santa Ana Molina, Hacienda Doima, Cartago, Colombia; c/o GANADERIA EL VERGEL LTDA., Cartago, Valle, Colombia; c/o ORGANIZACION LUIS HERNANDO GOMEZ BUSTAMANTE Y CIA. S.C.S., Cartago, Valle, Colombia; c/o AGRICOLA DOIMA DEL NORTE DEL VALLE LTDA., Cartago, Valle, Colombia; c/o INMOBILIARIA PASADENA LTDA., Cartago, Valle, Colombia; Km 7 Via Cartago-Obando, Hacienda El Vergel, Cartago, Colombia; c/o GANADERIAS BILBAO LTDA., Cartago, Valle, Colombia; c/o VISCAYA LTDA., Cartago, Valle, Colombia; c/o INMOBILIARIA EL ESCORIAL LTDA., Cartago, Valle, Colombia; c/o INMOBILIARIA LINARES LTDA., Cartago, Valle, Colombia; DOB 14 Mar 1958; POB El Aguila, Valle, Colombia; Cedula No. 16209410 (Colombia); Passport 16209410 (Colombia) (individual) [SDNT]

GOMEZ BUSTAMANTE, Wilmer de Jesus, c/o GAVIOTAS LTDA., Cartago, Valle, Colombia; Calle 17A No. 8N–15, Cartago, Valle, Colombia; DOB 26 Jan 1970; POB Aguila, Valle; Cedula No. 16223940 (Colombia); Passport AF002565 (Colombia); alt. Passport AH345442 (Colombia) (individual) [SDNT]

GOMEZ GALINDO, Omaira, Apartado Aereo 38028, Cali, Colombia; c/o CONSTRUCTORA GOPEVA LTDA., Cali, Colombia; Avenida 6N No. 38–90, Cali, Colombia; DOB 12 Dec 1951; Cedula No. 31299825 (Colombia) (individual) [SDNT]

GOMEZ GOMEZ, Viviana, c/o ORGANIZACION LUIS HERNANDO GOMEZ BUSTAMANTE Y CIA. S.C.S., Cartago, Valle, Colombia; c/o VISCAYA LTDA., Cartago, Valle, Colombia; c/o AGRICOLA DOIMA DEL NORTE DEL VALLE LTDA., Cartago, Valle, Colombia; c/o INMOBILIARIA PASADENA LTDA., Cartago, Valle, Colombia; Carrera 4 No. 12–20 of. 206, Cartago, Valle, Colombia; DOB 17 Oct 1982; NIT # 681946748–1 (Colombia) (individual) [SDNT]

GOMEZ JARAMILLO, Luis Fernando, c/o INMOBILIARIA U.M.V. S.A., Cali, Colombia; DOB 23 Aug 1965; Cedula No. 16716914 (Colombia) (individual) [SDNT]

GOMEZ JARAMILLO, Olga Cecilia, c/o GANADERIA EL VERGEL LTDA., Cartago, Valle, Colombia; c/o INMOBILIARIA EL ESCORIAL LTDA., Cartago, Valle, Colombia; c/o INMOBILIARIA LINARES LTDA., Cartago, Valle, Colombia; Carrera 4 No. 12–20 of. 206, Cartago, Valle, Colombia; c/o INMOBILIARIA PASADENA LTDA., Cartago, Valle, Colombia; c/o AGRICOLA DOIMA DEL NORTE DEL VALLE LTDA., Cartago, Valle, Colombia; c/o VISCAYA LTDA., Cartago, Valle, Colombia; c/o ORGANIZACION LUIS HERNANDO GOMEZ BUSTAMANTE Y CIA. S.C.S., Cartago, Valle, Colombia; DOB 29 Feb 1956; Cedula No. 31398070 (Colombia); Passport 31398070 (Colombia) (individual) [SDNT]

GOMEZ LLANOS AISPURO, Jose Rolando, c/o COMERCIALIZADORA BRIMAR'S, S.A. DE. C.V., Culiacan, Sinaloa, Mexico; c/o COMERCIAL JOANA, S.A. DE C.V., Guadalajara, Jalisco, Mexico; Calle Bradley, No. 5, Col. Anzures, Deleg. Miguel Hidalgo, Mexico City, Distrito Federal, Mexico; Acoxpa Andador 9, Edificio 44, Colonia Villa, Coapa, Distrito Federal, Mexico; DOB 8 Feb 1971; alt. DOB 2 Feb 1971; POB Culiacan, Sinaloa, Mexico; citizen Mexico; nationality Mexico; Passport 340038412 (Mexico); alt. Passport 340015480 (Mexico); R.F.C. GOAR710208RS0 (Mexico) (individual) [SDNTK]

GOMEZ MARIN LTDA., Km. 2 Via al Amprao, Ansermanuevo, Valle, Colombia; Calle 16 No. 1N–74, Cartago, Valle, Colombia; Km. 2 Via al Amparo, Cartago, Valle, Colombia; NIT # 800102465–1 (Colombia) [SDNT]

GOMEZ OCAMPO, Davinson (a.k.a. ''GORDO''), c/o GOMEZ MARIN LTDA., Ansermanuevo, Valle, Colombia; Calle 16 No. 1–58, Cartago, Valle, Colombia; DOB 10 Jul 1960; Cedula No. 2470433 (Colombia) (individual) [SDNT]

GOMEZ PABON, Humberto Henoc, c/o COPSERVIR LTDA., Bogota, Colombia; c/o TRIMARK LTDA., Bogota, Colombia; Cedula No. 7557394 (Colombia) (individual) [SDNT]

GOMEZ QUINTERO, Carlos Alberto, c/o FREXCO S.A., La Union, Valle, Colombia; c/o CONSTRUCCIONES E INVERSIONES LTDA., La Union, Valle, Colombia; c/o CASA GRAJALES S.A., La Union, Valle, Colombia; c/o FUNDACION CENTRO FRUTICOLA ANDINO, La Union, Valle, Colombia; c/o GRAJALES S.A., La Union, Valle, Colombia; c/o INVERSIONES SANTA CECILIA S.C.S., La Union, Valle, Colombia; Factoria La Rivera, La Union, Valle, Colombia; Calle 14 No. 4–124, La Union, Valle, Colombia; c/o INVERSIONES SANTA MONICA LTDA., La Union, Valle, Colombia; DOB 23 Jan 1957; POB Palmira, Valle, Colombia; Cedula No. 6355791 (Colombia); Passport AH411417 (Colombia) (individual) [SDNT]

GOMEZ SUAREZ, Jose Alonso, c/o DROGAS LA REBAJA BUCARAMANGA S.A., Bucaramanga, Colombia; c/o COOPDISAN, Bucaramanga, Colombia; DOB 8 Jan 1956; Cedula No. 91066409 (Colombia); Passport 91066409 (Colombia) (individual) [SDNT]

GOMEZ VIVAS, Manuel Antonio, c/o GANADERA LTDA., Cali, Colombia; DOB 3 Sep 1963; Cedula No. 7921814 (Colombia) (individual) [SDNT]

GONGORA ALARCON, Hernando, c/o TAURA S.A., Cali, Colombia; Cedula No. 19298944 (Colombia) (individual) [SDNT]

GONO, Gideon; DOB 29 Nov 1959; Passport AD000854 (Zimbabwe); Governor of the Reserve Bank of Zimbabwe (individual) [ZIMBABWE]

GONO, Hellin Mushanyuri; DOB 6 May 1962; Passport AN548299 (Zimbabwe); Spouse of Gideon Gono (individual) [ZIMBABWE]

GONZALES GARBANCHO DE ZEVALLOS, Sara Maria, c/o SERVICIOS SILSA S.A.C., Lima, Peru; c/o ORIENTE TOURS S.R.L., Lima, Peru; c/o PERUVIAN PRECIOUS METALS S.A.C., Lima, Peru; c/o TRANSPORTES AEREOS UNIDOS SELVA AMAZONICA S.A., Lima, Peru; Calle Trinidad Moran 1316, Lima, Peru; c/o

LUCERO IMPORT S.A.C., Lima, Peru; c/o EDITORA TRANSPARENCIA S.A., Lima, Peru; c/o PERU GLOBAL TOURS S.A.C., Lima, Peru; c/o EMPRESA EDITORA CONTINENTE PRESS S.A., Lima, Peru; DOB 02 Aug 1936; LE Number 07553590 (Peru) (individual) [SDNTK]

GONZALEZ BENITEZ, Olga Patricia, Hacienda Coque, Cartago, Colombia; c/o COMPANIA AGROINVERSORA HENAGRO LTDA., Cartago, Colombia; c/o AGRICOLA GANADERA HENAO GONZALEZ Y CIA. S.C.S., Cartago, Colombia; c/o DESARROLLOS COMERCIALES E INDUSTRIALES HENAO GONZALEZ Y CIA. S.C.S., Cartago, Colombia; Carrera 4 No. 16–04 apt. 303, Cartago, Colombia; Avenida 4 Oeste No. 5–97 Apt. 1001, Cali, Colombia; DOB 4 Aug 1965; POB Cartago, Valle Colombia; Cedula No. 29503761 (Colombia); Passport AH567983 (Colombia); alt. Passport 29503761 (Colombia) (individual) [SDNT]

GONZALEZ BETANCUR, Angel Horacio, c/o FISHING ENTERPRISE HOLDING INC., Panama City, Panama; c/o AQUAMARINA ISLAND INTERNATIONAL CORPORATION, Panama City, Panama; DOB 3 Feb 1966; POB Colombia; Cedula No. 6465085 (Colombia) (individual) [SDNT]

GONZALEZ MARTINEZ, Francisco Javier, c/o SERVICIOS DE LA SABANA E.U., Bogota, Colombia; c/o ADMINISTRADORA DE SERVICIOS VARIOS CALIMA S.A., Cali, Colombia; c/o CHAMARTIN S.A., Cali, Colombia; Cedula No. 16693353 (Colombia); Passport 16693353 (Colombia) (individual) [SDNT]

GONZALEZ MUNOZ, Daniel, Calle Carrasco 3895 No. 2, Chapultepec, Tijuana, Baja California, Mexico; c/o MULTISERVICIOS BRAVIO, S.A. DE C.V., Tijuana, Baja California, Mexico; c/o MULTISERVICIOS DEL NOROESTE DE MEXICO, S.A. DE C.V., Tijuana, Baja California, Mexico; c/o MEGA DOLAR, S.A. DE C.V., Tijuana, Baja California, Mexico; Blvd. Cuahutemoc 1499 L C 7BI, Colonia Zona Rio, Tijuana, Baja California, Mexico; DOB 20 Jun 1958; POB Ensenada, Baja California, Mexico; R.F.C. GOMD–580620-SX9 (Mexico) (individual) [SDNTK]

GONZALEZ POLANCO, Hermagoras (a.k.a. GONZALEZ APUSHANA, Armando; a.k.a. GONZALEZ POLANCO, Amaury; a.k.a. ''EL GORDO BAEZ''; a.k.a. ''GORDITO POLANCO''; a.k.a. ''MILCIADES''; a.k.a. ''UNCLE TOLI''), Karla Karolin Penthouse, Avenida 3 Entre 76 y 77, Maracaibo, Zulia, Venezuela; Caja Seca, Zulia, Venezuela; Avenida El Milagro, Edificio Villa Virginia, Maracaibo, Zulia, Venezuela; Maicao, Guajira, Colombia; Merida, Merida, Venezuela; Maracaibo, Zulia, Venezuela; Aruba; DOB 19 Oct 1962; alt. DOB 19 Oct 1959; POB Maicao, Guajira, Colombia; citizen Venezuela; alt. citizen Colombia; nationality Venezuela; alt. nationality Colombia; Cedula No. 7789819 (Venezuela); alt. Cedula No. 84041400 (Colombia) (individual) [SDNTK]

GONZALEZ QUINTERO, Melba Patricia, c/o AMERICANA DE COSMETICOS S.A., Bogota, Colombia; c/o LATINA DE COSMETICOS S.A. Y DISTRIBUCIONES S.A., Bogota, Colombia; c/o DISTRIBUIDORA DE DROGAS CONDOR S.A., Bogota, Colombia; c/o COINTERCOS S.A., Bogota, Colombia; c/o FIDUSER LTDA., Bogota, Colombia; c/o COSMEPOP, Bogota, Colombia; DOB 24 Dec 1971; Cedula No. 35415232 (Colombia); Passport 35415232 (Colombia) (individual) [SDNT]

GONZALEZ QUIRARTE, Eduardo (a.k.a. GOMEZ CHAVEZ, Gabriel; a.k.a. GONZALEZ LOPEZ, Gregorio; a.k.a. GONZALEZ QUIRARTE, Jose; a.k.a. GONZALEZ QUIRARTE, Lalo; a.k.a. ORELLANA ERAZO, Hector Manuel); DOB 28 Aug 1962; alt. DOB 20 Aug 1962; POB Jalisco Mexico; Passport 96140045817 (Mexico); alt. Passport 97380018185 (Mexico); SSN 550–63–9593 (United States) (individual) [SDNTK]

GONZALEZ ROBLEDO, Julio Cesar, c/o LABORATORIOS GENERICOS VETERINARIOS, Bogota, Colombia; DOB 9 Feb 1936; Cedula No. 2905977 (Colombia) (individual) [SDNT]

GONZALEZ, Carlos Alfonso (a.k.a. ALFONSO, Carlos), Panama (individual) [CUBA]

GONZALEZ, Maria Luz Nelly, c/o COOPERATIVA DE TRABAJO ASOCIADO ACTIVAR, Bogota, Colombia; c/o COOPERATIVA MULTIACTIVA DE COLOMBIA FOMENTAMOS, Bogota, Colombia; Cedula No. 51973466 (Colombia) (individual) [SDNT]

GOODRIDGE, Reginald B. (Senior) (a.k.a. GOODRICH, Reginald B. (Senior)); DOB 11 NOV 1952; Former Minister for Culture, Information, Tourism of Liberia (individual) [LIBERIA]

GOODWILL CHARITABLE ORGANIZATION, INC. (f.k.a. AL-SHAHID SOCIAL ASSOCIATION; f.k.a. EDUCATIONAL DEVELOPMENT ASSOCIATION), PO Box 1794, Dearborn, MI 48126; 13106 Warren Ave. Suite #4, Dearborn, MI 48126 [SDGT]

GOTOVINA, Ante; DOB 12 Oct 1955; POB Pasman, Croatia; ICTY indictee (individual) [BALKANS]

GOWHAR; Vessel Registration Identification IMO 9103087 (vessel) [NPWMD]

GOWRIE FARM, Norton, Zimbabwe [ZIMBABWE]

GRAJALES BERNAL, Sonia Patricia, c/o GRAJALES S.A., La Union, Valle, Colombia; c/o C.A.D. S.A., Bogota, Colombia; c/o JOSAFAT S.A., Tulua, Valle, Colombia; c/o COMUNICACIONES ABIERTAS CAMARY LTDA., Cali, Colombia; c/o ILOVIN S.A., Bogota, Colombia; c/o SALIM S.A., La Union, Valle, Colombia; c/o JEHOVA LTDA., Tulua, Valle, Colombia; c/o ASESORES CONSULTORES ASOCIADOS LTDA., Cali, Colombia; c/o CALI@TELE.COM LTDA., Cali, Colombia; c/o SALOME GRAJALES Y CIA. LTDA., Bogota, Colombia; c/o FUNDACION CENTRO FRUTICOLA ANDINO, La Union, Valle, Colombia; c/o G.L.G. S.A., Bogota, Colombia; c/o MACEDONIA LTDA., La Union, Valle, Colombia; Cedula No. 29613767 (Colombia) (individual) [SDNT]

GRAJALES HERNANDEZ, Agustin, c/o GRAJALES S.A., La Union, Valle, Colombia; c/o CASA GRAJALES S.A., La Union, Valle, Colombia; c/o FREXCO S.A., La Union, Valle, Colombia; Cedula No. 2697864 (Colombia) (individual) [SDNT]

GRAJALES HERNANDEZ, Alvaro Octavio, c/o C.A.D. S.A., Bogota, Colombia; c/o GRAJALES S.A., La Union, Valle, Colombia; c/o CRETA S.A., La Union, Valle, Colombia; Cedula No. 19465707 (Colombia) (individual) [SDNT]

GRAJALES LEMOS, Aida Salome, c/o GRAJALES S.A., La Union, Valle, Colombia; c/o JEHOVA LTDA., Tulua, Valle, Colombia; c/o RAMAL S.A., Bogota, Colombia; c/o CRETA S.A., La Union, Valle, Colombia; c/o FRUTAS DE LA COSTA S.A., Malambo, Atlantico, Colombia; c/o FUNDACION CENTRO DE INVESTIGACION HORTIFRUTICOLA DE COLOMBIA, La Union, Valle, Colombia; c/o GAD S.A., La Union, Valle, Colombia; c/o HOTEL LOS VINEDOS, La Union, Valle, Colombia; c/o MACEDONIA LTDA., La Union, Valle, Colombia; c/o AGRONILO S.A., Toro, Valle, Colombia; c/o ALMACAES S.A., Bogota, Colombia; c/o CASA GRAJALES S.A., La Union, Valle, Colombia; c/o SALIM S.A., La Union, Valle, Colombia; Calle 14 No. 13–03, La Union, Valle, Colombia; c/o TARRITOS S.A., Cali, Colombia; DOB 13 Dec 1970; POB La Union, Valle, Colombia; Cedula No. 39789871 (Colombia) (individual) [SDNT]

GRAJALES LEMOS, Juan Jacobo (a.k.a. GRAJALES LEMOS, Javier), c/o CRETA S.A., La Union, Valle, Colombia; c/o TRANSPORTES DEL ESPIRITU SANTO S.A., La Union, Valle, Colombia; c/o FUNDACION CENTRO FRUTICOLA ANDINO, La Union, Valle, Colombia; c/o GRAJALES S.A., La Union, Valle, Colombia; c/o SALIM S.A., La Union, Valle, Colombia; c/o HOTEL LOS VINEDOS, La Union, Valle, Colombia; c/o JEHOVA LTDA., Tulua, Valle, Colombia; DOB 28 Oct 1972; POB La Union, Valle, Colombia; Cedula No. 94273951 (Colombia) (individual) [SDNT]

GRAJALES LEMOS, Raul Alberto, c/o HOTEL LOS VINEDOS, La Union, Valle, Colombia; c/o TRANSPORTES DEL ESPIRITU SANTO S.A., La Union, Valle, Colombia; Carrera 10 Norte No. 31–01, Cali, Colombia; c/o AGRONILO S.A., Toro, Valle, Colombia; c/o ALMACAES S.A., Bogota, Colombia; c/o SALOME GRAJALES Y CIA. LTDA., Bogota, Colombia; Carrera 15 No. 13–39, La Union, Valle, Colombia; c/o IBADAN LTDA., Tulua, Valle, Colombia; c/o INTERNATIONAL FREEZE DRIED S.A., Bogota, Colombia; c/o FUNDACION CENTRO DE INVESTIGACION HORTIFRUTICOLA DE COLOMBIA, La Union, Valle, Colombia; c/o ARMAGEDON S.A., La Union, Valle, Colombia; c/o HEBRON S.A., Tulua, Valle, Colombia; c/o MACEDONIA LTDA., La Union, Valle, Colombia; c/o PANAMERICANA LTDA., Cali, Colombia; c/o SOCIEDAD DE NEGOCIOS SAN AGUSTIN LTDA., La Union, Valle, Colombia; c/o FUNDACION CENTRO FRUTICOLA ANDINO, La Union, Valle, Colombia; c/o C.A.D. S.A., Bogota, Colombia; c/o CRETA S.A., La Union, Valle, Colombia; c/o GRAJALES S.A., La Union, Valle, Colombia; c/o INVERSIONES

AGUILA LTDA., La Union, Valle, Colombia; c/o INVERSIONES SANTA MONICA LTDA., La Union, Valle, Colombia; c/o CASA GRAJALES S.A., La Union, Valle, Colombia; c/o FREXCO S.A., La Union, Valle, Colombia; c/o AGUSTIN GRAJALES Y CIA. LTDA., La Union, Valle, Colombia; c/o INDUSTRIAS DEL ESPIRITU SANTO S.A., Malambo, Atlantico, Colombia; c/o INVERSIONES SANTA CECILIA S.C.S., La Union, Valle, Colombia; c/o JOSAFAT S.A., Tulua, Valle, Colombia; c/o RAMAL S.A., Bogota, Colombia; c/o CONFECCIONES LINA MARIA LTDA., La Union, Valle, Colombia; c/o GAD S.A., La Union, Valle, Colombia; c/o G.L.G. S.A., Bogota, Colombia; c/o ILOVIN S.A., Bogota, Colombia; c/o INVERSIONES GRAME LTDA., La Union, Valle, Colombia; c/o INVERSIONES LOS POSSO LTDA. S.C.S., La Union, Valle, Colombia; c/o SALIM S.A., La Union, Valle, Colombia; c/o FRUTAS DE LA COSTA S.A., Malambo, Atlantico, Colombia; DOB 13 Dec 1957; POB La Union, Valle, Colombia; Cedula No. 6356044 (Colombia) (individual) [SDNT]

GRAJALES LONDONO, Juan Raul, c/o HEBRON S.A., Tulua, Valle, Colombia; c/o CONFECCIONES LINA MARIA LTDA., La Union, Valle, Colombia; c/o SALIM S.A., La Union, Valle, Colombia; c/o CITICAR LTDA., La Union, Valle, Colombia; c/o INTERNATIONAL FREEZE DRIED S.A., Bogota, Colombia; c/o DOXA S.A., La Union, Valle, Colombia; c/o CALI@TELE.COM LTDA., Cali, Colombia; c/o COMUNICACIONES ABIERTAS CAMARY LTDA., Cali, Colombia; c/o JOSAFAT S.A., Tulua, Valle, Colombia; DOB 10 Oct 1986; POB Bogota, Colombia; Cedula No. 11167762 (Colombia) (individual) [SDNT]

GRAJALES LONDONO, Lina Maria, c/o L.G.R. E.U., Cali, Colombia; c/o HOTEL LOS VINEDOS, La Union, Valle, Colombia; c/o HEBRON S.A., Tulua, Valle, Colombia; c/o JOSAFAT S.A., Tulua, Valle, Colombia; c/o SALIM S.A., La Union, Valle, Colombia; c/o CONFECCIONES LINA MARIA LTDA., La Union, Valle, Colombia; c/o GBS TRADING S.A., Cali, Colombia; c/o AGRONILO S.A., Toro, Valle, Colombia; c/o DOXA S.A., La Union, Valle, Colombia; c/o CITICAR LTDA., La Union, Valle, Colombia; DOB 13 Mar 1979; POB Bogota, Colombia; Cedula No. 29567575 (Colombia) (individual) [SDNT]

GRAJALES MARIN, Aura Cecilia, Carrera 15 No. 33A–53, Cali, Colombia; c/o INVERSIONES SANTA CECILIA S.C.S., La Union, Valle, Colombia; c/o INVERSIONES SANTA MONICA LTDA., La Union, Valle, Colombia; Cedula No. 21236002 (Colombia) (individual) [SDNT]

GRAJALES MARIN, Carlos Arturo, c/o INVERSIONES SANTA CECILIA S.C.S., La Union, Valle, Colombia; c/o INVERSIONES SANTA MONICA LTDA., La Union, Valle, Colombia; Cedula No. 63568339 (Colombia) (individual) [SDNT]

GRAJALES MEJIA, Hugo Marino, c/o PANAMERICANA LTDA., Cali, Colombia; c/o SOCIEDAD DE NEGOCIOS SAN AGUSTIN LTDA., La Union, Valle, Colombia; c/o FREXCO S.A., La Union, Valle, Colombia; c/o INVERSIONES GRAME LTDA., La Union, Valle, Colombia; Cedula No. 6355130 (Colombia) (individual) [SDNT]

GRAJALES MEJIA, Jorge Julio, c/o GRAJALES S.A., La Union, Valle, Colombia; c/o FREXCO S.A., La Union, Valle, Colombia; c/o INVERSIONES GRAME LTDA., La Union, Valle, Colombia; c/o AGUSTIN GRAJALES Y CIA. LTDA., La Union, Valle, Colombia; c/o SOCIEDAD DE NEGOCIOS SAN AGUSTIN LTDA., La Union, Valle, Colombia; c/o FUNDACION CENTRO DE INVESTIGACION HORTIFRUTICOLA DE COLOMBIA, La Union, Valle, Colombia; c/o FUNDACION CENTRO FRUTICOLA ANDINO, La Union, Valle, Colombia; Cedula No. 14961290 (Colombia) (individual) [SDNT]

GRAJALES MEJIA, Jose Agustin, c/o AGUSTIN GRAJALES Y CIA. LTDA., La Union, Valle, Colombia; DOB 29 Dec 1952; POB La Union, Valle, Colombia; Cedula No. 14990496 (Colombia) (individual) [SDNT]

GRAJALES POSSO, Gloria Amparo, c/o IBADAN LTDA., Tulua, Valle, Colombia; c/o INVERSIONES AGUILA LTDA., La Union, Valle, Colombia; Cedula No. 29613755 (Colombia) (individual) [SDNT]

GRAJALES POSSO, Maria Nancy, c/o CASA GRAJALES S.A., La Union, Valle, Colombia; c/o FREXCO S.A., La Union, Valle, Colombia; c/o GRAJALES S.A., La Union, Valle, Colombia; c/o INVERSIONES LOS POSSO LTDA S.C.S., La Union, Valle, Colombia; c/o PLAZA REAL LTDA., Cali, Colombia; Cedula No. 29613013 (Colombia) (individual) [SDNT]

GRAJALES PUENTES, Diana Carolina, c/o SALIM S.A., La Union, Valle, Colombia; c/o CITICAR LTDA., La Union, Valle, Colombia; c/o DOXA S.A., La Union, Valle, Colombia; c/o HEBRON S.A., Tulua, Valle, Colombia; c/o AGRONILO S.A., Toro, Valle, Colombia; c/o INDUSTRIAS DEL ESPIRITU SANTO S.A., Malambo, Atlantico, Colombia; c/o FRUTAS DE LA COSTA S.A., Malambo, Atlantico, Colombia; c/o JOSAFAT S.A., Tulua, Valle, Colombia; Transversal 13A No. 123–10 Int. 2 apt. 203, Bogota, Colombia; DOB 15 Mar 1979; POB La Victoria, Valle, Colombia; Cedula No. 52455790 (Colombia) (individual) [SDNT]

GRAJALES S.A., Carrera 25 No. 8–78, Bogota, Colombia; Factoria La Rivera, La Union, Valle, Colombia; Via Roldanillo Finca La Palmera, La Union, Valle, Colombia; NIT # 891900090–8 (Colombia) [SDNT]

GRAN COMPANIA DE HOTELES LTDA. (a.k.a. GRANCO), Calle 74 No. 53–30, Barranquilla, Colombia; NIT # 800011606–2 (Colombia) [SDNT]

GRAN MUELLE S.A., Calle 6 Km 5 Kennedy, Buenaventura, Colombia; Av. Simon Bolivar Km 5, Buenaventura, Colombia; Av. Portuaria Edif. Colfecar B-B Modulo 38, Buenaventura, Colombia; Carrera 3 No. 7–32 Piso 3, Buenaventura, Colombia; Av. Simon Bolivar Km 4 El Pinal, Buenaventura, Colombia; Calle 7A No. 3–73 Piso 3, Buenavetura, Colombia; Carrera 3 No. 7–42, Buenaventura, Colombia; NIT # 800173054–1 (Colombia) [SDNT]

GRANADA ASSOCIATES, INC., 9100 South Dadeland Boulevard, Suite 912, Miami, FL 33156; 780 NW Le Jeune Road, Suite 516, Miami, FL 33126; 780 NW 42nd Avenue, Suite 516, Miami, FL 33126; citizen Colombia; US FEIN 65–0336843 (United States) [SDNT]

GRANDA ESCOBAR, Rodrigo (a.k.a. ''CAMPOS, Arturo''; a.k.a. ''GALLOPINTO''; a.k.a. ''GONZALEZ, Ricardo''), Avenida Victoria No. 36, Urbanizacion Bolivar La Victoria, Jose Felix Rivas, Estado de Aragua, Venezuela; DOB 9 Apr 1949; POB Frontino, Antioquia, Colombia; Cedula No. 171493523–4 (Ecuador); alt. Cedula No. 19104578 (Colombia); Electoral Registry No. 22942118 (Venezuela); Passport PO16104 (Colombia) (individual) [SDNTK]

GRANJA LA SIERRA LTDA., Carrera 85C No. 43–22, Cali, Colombia; Callejon El Dinamo V/Gorgona, Candelaria, Colombia; NIT # 800253142–5 (Colombia) [SDNT]

GRANJA PORCICOLA LA FORTALEZA, Vda. La Hondura, Cartago, Valle, Colombia; Carrera 22 No. 8–71, Cartago, Valle, Colombia; NIT # 31423447–7 (Colombia) [SDNT]

GREAT LAKES BUSINESS COMPANY (a.k.a. GLBC), Gisenyi, Rwanda; P. O. Box 315, Goma, Congo, Democratic Republic of the [DRCONGO]

GREATER NILE PETROLEUM OPERATING COMPANY LIMITED (a.k.a. GNPOC), El Nar Oilfield, Muglad Basin, Sudan; Red Sea Export Terminal, Marsa al-Basha'ir, Sudan; El Toor Oilfield, Muglad Basin, Sudan; El Harr Oilfield, Muglad Basin, Sudan; Heglig Processing Facility, Muglad Basin, Sudan; Pipeline, Heglig via El-Obeid to Port Sudan, Sudan; Hotel Palace, Room 420, El Nil Avenue, Khartoum, Sudan; Kaikang Oilfield, Muglad Basin, Sudan; Unity Oilfield, Muglad Basin, Sudan; Heglig Oilfield, Muglad Basin, Sudan; Toma South Oilfield, Muglad Basin, Sudan [SUDAN]

GREEN CAR RENT LIMITED PARTNERSHIP (a.k.a. HANG HUN SUAN CHAMKAT KRIN KHA REN), 445/11 Soi Ramkamhaeng, 39 Lat Phrao Road, Wang Thong Lang, Bang Kapi district, Bangkok, Thailand [SDNTK]

GREEN ISLAND S.A., Avenida El Dorado Entrada 2 Int. 6, Bogota, Colombia; NIT # 830067456–4 (Colombia) [SDNT]

GRETE SHIPPING CO. S.A., c/o EMPRESA DE NAVEGACION CARIBE, Edificio Lonja del Comercio, Lamparilla 2, Caja Postal 1784, Havana 1, Cuba [CUBA]

GRETE STAR (f.k.a. AVIS FAITH) (vessel) [CUBA]

GRIFFIN, Paul Nicholas; DOB 16 Feb 1964; nationality United Kingdom (individual) [NPWMD]

GRIFFIN, Peter; DOB 9 Sep 1935; POB Oxford, United Kingdom; nationality United Kingdom; Passport B401584 (United Kingdom) issued 28 Sep 1989 expires 28 Sep 1999; alt. Passport B109455 (United Kingdom) issued 3 Oct 1979 (individual) [NPWMD]

GROUPED INDUSTRIES CORPORATION, P.O. Box 2241, Khartoum, Sudan [SUDAN]

GRUBAN, Momcilo; DOB 19 Jun 1961; Bosnian Serb; ICTY indictee in custody (individual) [BALKANS]

GRUESO HURTADO, Ximena, c/o INCOMMERCE S.A., Cali, Colombia; DOB 19 Nov 1980; Cedula No. 66968767 (Colombia); Passport 66968767 (Colombia) (individual) [SDNT]

GRUESO, Alexei, c/o INCOMMERCE S.A., Cali, Colombia; Cedula No. 16607352 (Colombia); Passport 16607352 (Colombia) (individual) [SDNT]

GRUPO ARIAS-ARCE AGENCIA DE LOCALIZACION DE VEHICULOS, S. DE R.L., Rufino Tamayo 9970, Rio Tijuana, Tijuana, Baja California, Mexico; R.F.C. GAA–990226-SW8 (Mexico) [SDNTK]

GRUPO GAMAL, S.A. DE C.V., Av. La Paz 1951, Guadalajara, Jalisco CP 44160, Mexico [SDNTK]

GRUPO INDUSTRIAL GAXIOLA HERMANOS S.A. DE C.V. (a.k.a. GRUPO INDUSTRIAL GAXIOLA; f.k.a. MADYVA), Calle del Oro, Esq. Vinedo, Colonia Parque Industrial, Hermosillo, Sonora 83299, Mexico; Guadalajara, Jalisco, Mexico; Luis Encinas y Alberto Truqui, Hermosillo, Sonora, Mexico; R.F.C. GIG910522BR8 (Mexico) [SDNTK]

GRUPO INMOBILIARIO PROFESIONAL BAJA, S.A DE C.V., Carrillo Puerto, Calle 8317 4, Zona Central, Tijuana, Baja California, Mexico; R.F.C. GIP–951219–8P9 (Mexico) [SDNTK]

GRUPO INVERSOR PRINCIPE DE VERGARA S.L., Calle Jarilla, 5—Pis 4 B, Madrid 28043, Spain; C.I.F. B84758374 (Spain) [SDNT]

GRUPO SANTA LTDA., Carrera 4 12–41 piso 14 y 15, Edificio Seguros Bolivar, Cali, Colombia; Calle 18 106–98 of. 201/202, Cali, Colombia; Carrera 84 17–29, Cali, Colombia [SDNT]

GS PLUS CONSULTORES, S.A. DE C.V., Tijuana, Baja California, Mexico; R.F.C. GPC–011226–4A5 (Mexico) [SDNTK]

GUACA EXPORT, Panama [CUBA]

GUAMAR SHIPPING CO. S.A., c/o EMPRESA DE NAVEGACION CARIBE, Edificio Lonja del Comercio, Lamparilla 2, Caja Postal 1784, Havana 1, Cuba [CUBA]

GUAMATUR, Buenos Aires, Argentina [CUBA]

GUERRERO BRAND, Luis Hernando, c/o A G REPRESENTACIONES LTDA., Cali, Colombia; Cedula No. 16656929 (Colombia) (individual) [SDNT]

GULF CARTEL (a.k.a. CARDENAS GUILLEN ORGANIZATION), Mexico [SDNTK]

GUMBO, Aleck Rugare Ngidi, Montrolse Farm, PO Box 1175, Gweru, Zimbabwe; DOB 8 Mar 1940; Minister of Economic Development (individual) [ZIMBABWE]

GUNAWAN, Gun Gun Rusman (a.k.a. GUNAWAN, Rusman; a.k.a. ''ABD AL-HADI''; a.k.a. ''ABDUL HADI''; a.k.a. ''ABDUL KARIM''; a.k.a. ''BUKHORI''; a.k.a. ''BUKHORY''); DOB 6 Jul 1977; POB Cianjur, West Java, Indonesia; nationality Indonesia (individual) [SDGT]

GUNEID SUGAR COMPANY LIMITED (a.k.a. GUNEID SUGAR FACTORY), P.O. Box 511, Khartoum, Sudan [SUDAN]

GUTIERREZ ARDILA, Eduardo, c/o EXPORT CAFE LTDA., Cali, Colombia; DOB 8 Aug 1958; Cedula No. 16642433 (Colombia) (individual) [SDNT]

GUTIERREZ REYES, Jose, Vinales Tours, Oaxaca 80, Roma, Mexico, D.F., Mexico (individual) [CUBA]

GUTIERREZ RODRIGUEZ, Pablo, c/o LITOPHARMA, Barranquilla, Colombia; c/o COPSERVIR LTDA., Bogota, Colombia; Cedula No. 85435604 (Colombia) (individual) [SDNT]

GUTIERREZ VERGARA, Luz Mery, Colombia; DOB 26 Apr 1977; POB Ubala, Cundinamarca, Colombia; citizen Colombia; nationality Colombia; Cedula No. 40442724 (Colombia) (individual) [SDNTK]

GUTIERREZ, Teobaldo Jesus, c/o CAJA SOLIDARIA, Bogota, Colombia; c/o LITOPHARMA, Barranquilla, Colombia; c/o COPSERVIR LTDA., Bogota, Colombia; Cedula No. 72167412 (Colombia) (individual) [SDNT]

GUZMAN ENRIQUEZ, Juan Luis, Mexico; DOB 24 Jun 1950; POB La Huacana, Michoacan De Ocampo, Mexico; citizen Mexico; nationality Mexico; C.U.R.P. GUEJ500624HDFZNN06 (Mexico); R.F.C. GUEJ500624 (Mexico) (individual) [SDNTK]

GUZMAN LOERA, Joaquin (a.k.a. AREGON, Max; a.k.a. CARO RODRIGUEZ, Gilberto; a.k.a. GUIERREZ LOERA, Jose Luis; a.k.a. GUMAN LOERAL, Joaquin; a.k.a. GUZMAN FERNANDEZ, Joaquin; a.k.a. GUZMAN LOEIA, Joaguin; a.k.a. GUZMAN LOESA, Joaquin; a.k.a. GUZMAN LOREA, Chapo; a.k.a. GUZMAN PADILLA, Joaquin; a.k.a. GUZMAN, Achivaldo; a.k.a. GUZMAN, Archibaldo; a.k.a. GUZMAN, Aureliano; a.k.a. GUZMAN, Chapo; a.k.a. GUZMAN, Joaquin Chapo; a.k.a. ORTEGA, Miguel; a.k.a. OSUNA, Gilberto; a.k.a. RAMIREZ, Joise Luis; a.k.a. RAMOX PEREZ, Jorge); DOB 25 Dec 1954; POB Mexico (individual) [SDNTK]

GUZMAN TROCHA, Luis Fernando, c/o CAJA SOLIDARIA, Bogota, Colombia; c/o COPSERVIR LTDA., Bogota, Colombia; c/o LITOPHARMA, Barranquilla, Colombia; Cedula No. 72170509 (Colombia) (individual) [SDNT]

H & H METALFORM GMBH, Postfach 1160, Strontianitstrasse 5, Drensteinfurt 4406, Germany [IRAQ2]

HABANOS TRADING, Geneva, Switzerland [CUBA]

HABBASH, George (a.k.a. HABASH, George); Secretary General of POPULAR FRONT FOR THE LIBERATION OF PALESTINE (individual) [SDT]

HABIB, Mohammed Turki, Baghdad, Iraq (individual) [IRAQ2]

HABIBI, Skender; DOB 13 Jul 1968; POB Vitina, Serbia and Montenegro (individual) [BALKANS]

HACHITO SANCHEZ, Angel Alberto, c/o COPSERVIR LTDA., Bogota, Colombia; DOB 9 Nov 1962; Cedula No. 17634454 (Colombia) (individual) [SDNT]

HACIENDA CIEN ANOS DE TIJUANA, S. DE R.L. DE C.V. (a.k.a. COCINA ANTIGUA, S. DE R.L. DE C.V.; a.k.a. LA HACIENDA DE TIJUANA, S. DE R.L. DE C.V.), Calle Jose Maria Velazco No. 1407, Colonia Zona Rio, Baja California, Mexico; Sanchez Taboada 10451, Rio Tijuana, Arreola y Cjon de Acceso Frente a Saveri, Tijuana, Baja California, Mexico; Blvd. Sanchez Taboada S/N, No. 10451, Zona Rio, Fte. de Saverios e Arreola y cion accesso, Tijuana, Baja California, Mexico; R.F.C. CAN010702DF8 (Mexico); alt. R.F.C. HTI010702GR7 (Mexico) [SDNTK]

HACIENDA DE DON JOSE RESTAURANT BAR, S.A. DE C.V., Av. del Rocio 1193, Tijuana, Baja California CP 22200, Mexico [SDNTK]

HACIENDA LA NOVILLERA (a.k.a. NOVILLERA; a.k.a. NOVILLERA GANADERA), Carrera 4 12–41 piso 15, Edificio Seguros Bolivar, Cali, Colombia; Paso de la Bolsa, Jamundi, Valle del Cauca, Cali, Colombia [SDNT]

HACIENDA SANDRANA (a.k.a. SANDRANA GANADERA; a.k.a. SANDRANDA), Carrera 4 12–41 piso 15, Edificio Seguros Bolivar, Cali, Colombia; San Pedro, Valle del Cauca, Colombia [SDNT]

HADDAD, Fethi Ben Assen Ben Salem, Via Fulvio Testi, 184, Cinisello Balsamo, Milan, Italy; Via Porte Giove, 1, Mortara, Pavia, Italy; DOB 28 Mar 1963; alt. DOB 28 Jun 1963; POB Tataouene, Tunisia; nationality Tunisia; Italian Fiscal Code HDDFTH63H28Z352V; Passport L 183017 issued 14 Feb 1996 expires 13 Feb 2001 (individual) [SDGT]

HADI, Mizban Khadr; DOB 1938; POB Mandali District, Diyala, Iraq; nationality Iraq; member, Ba'th party regional command and Revolutionary Command Council since 1991 (individual) [IRAQ2]

HADZIC, Goran; DOB 7 Sep 1958; POB Municipality of Vinkovci, Croatia (individual) [BALKANS]

HADZIHASANOVIC, Enver; DOB 7 Jul 1950; POB Zvornik, Bosnia-Herzegovina; ICTY indictee (individual) [BALKANS]

HAGGAR ASSALAYA SUGAR FACTORY, Haggar Assalaya, Sudan [SUDAN]

HALAVANAU, Viktar Hryhoryavich (a.k.a. GOLOVANOV, Viktar Grigoriyevich; a.k.a. GOLOVANOV, Viktar Hryhoryavich; a.k.a. GOLOVANOV, Viktar Ryhoravich; a.k.a. GOLOVANOV, Viktor Grigoriyevich; a.k.a. GOLOVANOV, Viktor Hryhoryavich; a.k.a. GOLOVANOV, Viktor Ryhoravich; a.k.a. HALAVANAU, Viktor Hryhoryavich; a.k.a. HALAVANAU, Viktar Grigoriyevich; a.k.a. HALAVANAU, Viktar Ryhoravich; a.k.a. HALAVANAU, Viktor Grigoriyevich; a.k.a. HALAVANAU, Viktor Ryhoravich); DOB 1952; POB Borisov, Belarus; Minister of Justice (individual) [BELARUS]

HALILI, Nevzat; DOB 15 Sep 1946; POB Poroj, Macedonia (individual) [BALKANS]

HALILOVIC, Sefer; DOB 6 Jan 1952; POB Prijepolje, Serbia and Montenegro; ICTY indictee (individual) [BALKANS]

HAMAMI, Brahim Ben Hedili Ben Mohamed, Via de' Carracci n.l5, Casalecchio di Reno (Bologna), Italy; DOB 20 Nov 1971; POB Goubellat, Tunisia; alt. POB Koubellat, Tunisia; nationality Tunisia; Passport Z106861 issued 18 Feb 2004 expires 17 Feb 2009 (individual) [SDGT]

HAMAS (a.k.a. HARAKAT AL-MUQAWAMA AL-ISLAMIYA; a.k.a. ISLAMIC RESISTANCE MOVEMENT; a.k.a. IZZ AL-DIN AL QASSAM BATTALIONS; a.k.a. IZZ AL-DIN AL QASSAM BRIGADES; a.k.a. IZZ AL-DIN AL QASSAM FORCES; a.k.a. IZZ AL-DIN AL-QASSIM BATTALIONS; a.k.a. IZZ AL-DIN AL-QASSIM BRIGADES; a.k.a. IZZ AL-DIN AL-QASSIM FORCES; a.k.a. STUDENTS OF AYYASH; a.k.a.

STUDENTS OF THE ENGINEER; a.k.a. YAHYA AYYASH UNITS) [SDT] [FTO] [SDGT]

HAMDAN, Salim Ahmad Salim (a.k.a. AL-JADAWI, Saqar; a.k.a. AL-JADDAW, Saqr); DOB 1965; POB Al-Mukalla, Yemen; Passport 00385937 (Yemen) (individual) [SDGT]

HAMDAN, Usama, Haret Hreik, Lebanon; DOB 1964 (individual) [SDGT]

HAMID, Mustafa (a.k.a. AL-MASRI, Abu al-Walid; a.k.a. AL-MISRI, Abu Walid; a.k.a. AL-WALID, Abu; a.k.a. ATIYA, Mustafa; a.k.a. HAMID, Mustafa Muhammad 'Atiya; a.k.a. ''AL-MAKKI, Hashim''); DOB Mar 1945; POB Alexandria, Egypt; nationality Egypt; alt. nationality Pakistan (individual) [SDGT]

HAMIEH, Jamiel (a.k.a. HAMEIAH, Jamel; a.k.a. HAMEIAH, Jamil; a.k.a. HAMEIAH, Mamil; a.k.a. HAMEIEH, Jamil; a.k.a. HAMEIH, Jamill; a.k.a. HAMER, Jamil; a.k.a. HAMIAEH, Jamil; a.k.a. HAMIAH, Jamiel; a.k.a. HAMIE, Jamil; a.k.a. HAMIE, Jamil Abdulkarim; a.k.a. HAMIE, Jamile; a.k.a. HAMIEAH, Jamiel; a.k.a. HAMIEAH, Jamil; a.k.a. HAMIEH, Jamal; a.k.a. HAMIEH, Jamil; a.k.a. HAMIEH, Mamil; a.k.a. HAMIEL, Jamil; a.k.a. HAMIEYE, Jamil; a.k.a. HAMIEYYEH, Jamil; a.k.a. HAMIL, Jamil; a.k.a. HAMIYA, Abdul Jamil; a.k.a. HAMIYE, Jamil; a.k.a. HAMIYYAH, Jamil; a.k.a. HAMIYYEH, Jamil; a.k.a. HAMYH, Jamil; a.k.a. KARIM, Jamil Abdul; a.k.a. NAZIM, Abou; a.k.a. NEZAM, Abu; a.k.a. NIZAM, Abou); DOB Sep 1938 (individual) [SDNTK]

HAMMADOU, Abid (a.k.a. ABOU ZEID, Abdelhamid; a.k.a. ABU ZEID, Abdelhamid; a.k.a. ADEL, Youcef; a.k.a. HAMADU, Abid; a.k.a. ''ABU ABDELLAH''); DOB 12 Dec 1965; POB Touggourt, Ouargla, Algeria (individual) [SDGT]

HAMMID, Mohammed Tahir (a.k.a. ''ABDELHAMID AL KURDI''), Via della Martinella 132, Parma, Italy; DOB 1 Nov 1975; POB Poshok, Iraq; nationality Iraq; Kurdish; arrested 31 Mar 2003 (individual) [SDGT]

HAMRAOUI, Kamel Ben Mouldi Ben Hassan (a.k.a. ''KAMEL''; a.k.a. ''KIMO''), Via Bertesi 27, Cremona, Italy; DOB 21 Oct 1977; POB Beja, Tunisia; nationality Tunisia; Passport P229856 issued 1 Nov 2002 expires 31 Oct 2007; arrested 1 Apr 2003 (individual) [SDGT]

HAMUDAT, General Maki Mustafa (a.k.a. AL-HAMADAT, General Maki; a.k.a. HAMUDAT, Maki; a.k.a. HMODAT, Mackie; a.k.a. MUSTAFA, Macki Hamoudat), Mosul, Iraq; DOB circa 1934; nationality Iraq (individual) [IRAQ2]

HAPILON, Isnilon Totoni (a.k.a. HAPILUN, Isnilon; a.k.a. HAPILUN, Isnilun; a.k.a. ''ABU MUSAB''; a.k.a. ''SALAHUDIN''; a.k.a. ''TUAN ISNILON''); DOB 18 Mar 1966; alt. DOB 10 Mar 1967; POB Bulanza, Lantawan, Basilan, the Philippines; nationality Philippines (individual) [SDGT]

HAPPY DAYS S. DE H., Calle 78 No. 53–70, Locales 315 y 316, Barranquilla, Colombia; NIT # 802003826–1 (Colombia) [SDNT]

HAQ, Abdul (a.k.a. ABUDUHAKE; a.k.a. AL-HAQ, 'Abd; a.k.a. AXIMU, Memetiming; a.k.a. HEQ, Abdul; a.k.a. IMAN, Maimaiti; a.k.a. JUNDULLAH, Abdulheq; a.k.a. MAIMAITI, Maimaitiming; a.k.a. MAIMAITI, Maiumaitimin; a.k.a. MEMETI, Memetiming; a.k.a. QEKEMAN, Memetiming; a.k.a. SAIFUDING; a.k.a. SAIMAITI, Abdul; a.k.a. ''KHALIQ, Muhammad Ahmed''; a.k.a. ''MUHELISI''; a.k.a. ''QERMAN''); DOB 10 Oct 1971; POB Chele County, Khuttan Area, Xinjiang Uighur Autonomous Region, China; nationality China; National ID No. 653225197110100533 (China) (individual) [SDGT]

HAQ, Huda bin Abdul (a.k.a. AL MUKHLAS, Ali Gufron; a.k.a. GHUFRON, Ali; a.k.a. GUFRON, Ali; a.k.a. MUCHLAS; a.k.a. MUKHLAS; a.k.a. MUKLAS; a.k.a. ''SOFWAN''); DOB 9 Feb 1960; alt. DOB 2 Feb 1960; POB Solokuro subdistrict, Lamongan district, East Java province, Indonesian; nationality Indonesia (individual) [SDGT]

HARA COMPANY (a.k.a. HARA INSTITUTE), Tehran, Iran [NPWMD]

HARADINAJ, Daut; DOB 6 Apr 1978; POB Glodjane, Serbia and Montenegro (individual) [BALKANS]

HARAKAT UL-JIHAD-I-ISLAMI/BANGLADESH (a.k.a. HARAKAT UL JIHAD AL ISLAMI; a.k.a. HARAKAT UL JIHAD ISLAMI BANGLADESH; a.k.a. HARAKAT UL-JIHAD E ISLAMI BANGLADESH; a.k.a. HARKAT UL JIHAD AL ISLAMI; a.k.a. HARKATUL JIHAD; a.k.a. HARKATUL JIHAD AL ISLAM; a.k.a. HARKAT-UL-JEHAD-AL-ISLAMI; a.k.a. HUJI-B; a.k.a. IDEK; a.k.a. ISLAMI DAWAT-E-KAFELA) [FTO] [SDGT]

HARAKAT UL-MUJAHIDEEN (a.k.a. AL-FARAN; a.k.a. AL-HADID; a.k.a. AL-HADITH; a.k.a. HARAKAT UL-ANSAR; a.k.a. HARAKAT UL-MUJAHIDIN; a.k.a. HUA; a.k.a. HUM; a.k.a. JAMIAT UL-ANSAR) [FTO] [SDGT]

HARDAN, Assaad Halim (a.k.a. HARDAN, As'ad; a.k.a. HARDAN, Assad); DOB 31 Jul 1951; POB Rashayya al-Fakhar, Lebanon; alt. POB Rashayya al-Fuqhar, Lebanon; alt. POB Rashia al Foukhar, Lebanon (individual) [LEBANON]

HARMONY FARM, Mazowe, Zimbabwe [ZIMBABWE]

HARNMAN H (f.k.a. PEONY ISLANDS) (vessel) [CUBA]

HARUN, Ahmad Muhammed (a.k.a. HAROUN, Ahmed Mohamed; a.k.a. HAROUN, Ahmed Mohammed; a.k.a. HARUN, Ahmad; a.k.a. HARUN, Ahmad Muhammad; a.k.a. HARUN, Mawlana Ahmad Muhammad); DOB 1964; POB Kordofan, Sudan; nationality Sudan; State Minister for Humanitarian Affairs; former State Minister for the Interior; former Coordinator of the Popular Police Forces (individual) [DARFUR]

HASANI, Zhavit; DOB 5 May 1957; POB Tanusevci, Macedonia (individual) [BALKANS]

HATKAEW COMPANY LTD. (a.k.a. BORISAT HAT KAEO CHAMKAT; a.k.a. HAD KAEW COMPANY LTD.), 275 Soi Thiam Ruammit, Ratchada Phisek Road, Huai Khwang district, Bangkok, Thailand [SDNTK]

HAVANA INTERNATIONAL BANK, LTD., 20 Ironmonger Lane, London EC2V 8EY, United Kingdom [CUBA]

HAVANATUR, 54 Rue Richelieu, Paris, France [CUBA]

HAVANATUR BAHAMAS LTD., East Bay Street, Nassau, Bahamas, The [CUBA]

HAVANATUR CHILE S.A. (f.k.a. GUAMATUR S.A.), Avenue 11 de Septiembre 2155, Edificio Panoramico, Torre C, Oficina 805, Providencia, Santiago, Chile [CUBA]

HAVANATUR S.A. (a.k.a. HAVANATUR, S.A.), Monteagudo e/Cuba y Carretera Central, Camaguey, Cuba; Panama City, Panama; Hialeah, FL; Maipu 464, Piso 10, Buenos Aires 1006, Argentina; Gerardo Medina No. 633, e/Avenue Borregos y Carretera de Vinales, Pinar del Rio, Cuba; Edificio Sierra Maestra, Calle 1era e/0 y 2, Miramar, Playa, Ciudad Habana, Cuba; Avenue 3era e/33 y 34, Varadero, Cuba; Calle 8 no. 56 e/1era. y 3ra. Rpto., Vista Allegre, Santiago de Cuba, Cuba; Avenue 40 esq. 41 #4101, Cienfuegos, Cuba; 1ra. Rotonda Cayo Coco, Moron, Ciego de Avila, Cuba; Frexes no. 172 e/Morales Lemus y Narciso Lopez, Holguin, Cuba; C.U.I.T. 30–68074603–2 (Argentina) [CUBA]

HAVINPEX, S.A. (a.k.a. TRANSOVER, S.A.), Panama City, Panama [CUBA]

HAWATMA, Nayif (a.k.a. HAWATMAH, Nayif; a.k.a. HAWATMEH, Nayif; a.k.a. KHALID, Abu); DOB 1933; Secretary General of DEMOCRATIC FRONT FOR THE LIBERATION OF PALESTINE—HAWATMEH FACTION (individual) [SDT]

HAXHIREXHA, Kastriot; DOB 9 May 1961; POB Debar, Macedonia (individual) [BALKANS]

HAYA, Francisco, Panama (individual) [CUBA]

HAYDEE DE MUNOZ Y CIA. S. EN C., Avenida 6N No. 23DN–16, Cali, Colombia; Avenida 4N No. 5N–20, Cali, Colombia [SDNT]

HEATH, Noel Timothy (a.k.a. ZAMBA, Noel Heath; a.k.a. ZAMBO, Noel Heath), Cardin Avenue, Saint Kitts and Nevis; DOB 16 Dec 1949; POB St Kitts and Nevis; Passport 03574 (United Kingdom) (individual) [SDNTK]

HEBRON S.A., Calle 28 No. 27–18, Tulua, Valle, Colombia; NIT # 800107304–7 (Colombia) [SDNT]

HEJAZI, Mohammad; DOB circa 1959; citizen Iran; nationality Iran (individual) [NPWMD]

HEKMATYAR, Gulbuddin (a.k.a. HEKHMARTYAR, Gulbuddin; a.k.a. HEKMATIAR, Gulbuddin; a.k.a. HEKMATYAR, Gulabudin; a.k.a. HEKMETYAR, Gulbudin; a.k.a. HIKMETYAR, Golboddin; a.k.a. KHEKMATIYAR, Gulbuddin), Iran; DOB 1 Aug 1949; POB Konduz Province, Afghanistan (individual) [SDGT]

HELFORD DIRECTORS LIMITED, Haven Court, 5 Library Ramp, Gibraltar, United Kingdom [IRAQ2]

HENAO DE SANCHEZ, Hortensia, c/o ALFA PHARMA S.A., Bogota, Colombia; DOB 17 Oct 1917; Cedula No. 29013554 (Colombia) (individual) [SDNT]

HENAO GONZALEZ, Carlos Andres, c/o ARIZONA S.A., Cartago, Colombia; c/o

ORGANIZACION EMPRESARIAL A DE J HENAO M E HIJOS Y CIA. S.C.S., Cartago, Colombia; c/o COMPANIA AGROINVERSORA HENAGRO LTDA., Cartago, Colombia; c/o AGRICOLA GANADERA HENAO GONZALEZ Y CIA. S.C.S., Cartago, Colombia; Carrera 8N No. 17A–12, Cartago, Colombia; c/o AGROPECUARIA MIRALINDO S.A., Cartago, Colombia; c/o DESARROLLOS COMERCIALES E INDUSTRIALES HENAO GONZALEZ Y CIA. S.C.S., Cartago, Colombia; DOB 27 Nov 1980; Cedula No. 75096405 (Colombia); Passport 75096405 (Colombia) (individual) [SDNT]

HENAO GONZALEZ, Lina Marcela, c/o COMPANIA AGROINVERSORA HENAGRO LTDA., Cartago, Colombia; c/o ORGANIZACION EMPRESARIAL A DE J HENAO M E HIJOS Y CIA. S.C.S., Cartago, Colombia; c/o DESARROLLOS COMERCIALES E INDUSTRIALES HENAO GONZALEZ Y CIA. S.C.S., Cartago, Colombia; c/o AGRICOLA GANADERA HENAO GONZALEZ Y CIA. S.C.S., Cartago, Colombia; Avenida 4 Oeste No. 5–97, Apt. 1001, Cali, Colombia; DOB 10 May 1985; POB Cali, Valle, Colombia; Cedula No. TI–85051037834 (Colombia); NIT # 650000091–9 (Colombia); Passport AF228090 (Colombia); alt. Passport TI–85051037834 (Colombia) (individual) [SDNT]

HENAO GONZALEZ, Olga Patricia, c/o COMPANIA AGROINVERSORA HENAGRO LTDA., Cartago, Colombia; Avenida 4 Oeste No. 5–97, Apt. 1001, Cali, Colombia; c/o DESARROLLOS COMERCIALES E INDUSTRIALES HENAO GONZALEZ Y CIA. S.C.S., Cartago, Colombia; c/o ORGANIZACION EMPRESARIAL A DE J HENAO M E HIJOS Y CIA. S.C.S., Cartago, Colombia; c/o AGRICOLA GANADERA HENAO GONZALEZ Y CIA. S.C.S., Cartago, Colombia; DOB 18 Jan 1988; POB Cali, Valle, Colombia; Cedula No. RN12524986 (Colombia); NIT # 600018532–2 (Colombia); Passport AG762459 (Colombia); alt. Passport RN12524986 (Colombia) (individual) [SDNT]

HENAO HINESTROZA, Maria Nohelio, c/o INVHERESA S.A., Cali, Colombia; DOB 20 Mar 1954; Cedula No. 26271587 (Colombia) (individual) [SDNT]

HENAO LOPEZ, Alberto (a.k.a. HENAO, Alberto Lopez), c/o ALFA PHARMA S.A., Bogota, Colombia; DOB 12 Aug 1913; Cedula No. 2630951 (Colombia) (individual) [SDNT]

HENAO MONTOYA, Arcangel de Jesus, c/o DESARROLLOS COMERCIALES E INDUSTRIALES HENAO GONZALEZ Y CIA. S.C.S., Cartago, Colombia; c/o ORGANIZACION EMPRESARIAL A DE J HENAO M E HIJOS Y CIA. S.C.S., Cartago, Colombia; c/o AGRICOLA GANADERA HENAO GONZALEZ Y CIA. S.C.S., Cartago, Colombia; c/o AGROPECUARIA MIRALINDO S.A., Cartago, Colombia; c/o COMPANIA AGROINVERSORA HENAGRO LTDA., Cartago, Colombia; c/o ARIZONA S.A., Cartago, Colombia; c/o MAQUINARIA TECNICA Y TIERRAS LTDA., Cartago, Colombia; Hacienda Coque, Cartago, Colombia; Carrera 42 No. 5B–81, Cali, Colombia; Carrera 4 No. 16–04 apt. 303, Cartago, Colombia; Carrera 8N No. 17A–12, Cartago, Colombia; DOB 7 Oct 1954; POB Cartago, Valle, Colombia; Cedula No. 16215230 (Colombia); NIT # 16215230–1 (Colombia); Passport 16215230 (Colombia) (individual) [SDNT]

HENAO MONTOYA, Lorena, c/o INVERSIONES LOS POSSO LTDA. S.C.S., La Union, Valle, Colombia; c/o IBADAN LTDA., Tulua, Valle, Colombia; c/o INDUSTRIAS AGROPECUARIAS EL EDEN S.A., Higueronal Torti, Darien, Panama; c/o INVERSIONES EL EDEN S.C.S., Cali, Colombia; c/o CONSTRUCTORA UNIVERSAL LTDA., Cali, Colombia; Calle 8 No. 39–79 of. 201, Cali, Colombia; c/o INVERSIONES SANTA MONICA LTDA., La Union, Valle, Colombia; c/o INDUSTRIAS AGROPECUARIAS DEL VALLE LTDA., Cali, Colombia; c/o PANAMERICANA LTDA., Cali, Colombia; c/o INVERSIONES SANTA CECILIA S.C.S., La Union, Valle, Colombia; c/o INVERSIONES AGUILA LTDA., La Union, Valle, Colombia; c/o AGROINVERSORA URDINOLA HENAO Y CIA. S.C.S., Cali, Colombia; c/o CASA GRAJALES S.A., La Union, Valle, Colombia; c/o FREXCO S.A., La Union, Valle, Colombia; c/o SOCIEDAD DE NEGOCIOS SAN AGUSTIN LTDA., La Union, Valle, Colombia; c/o INVERSIONES GRAME LTDA., La Union, Valle, Colombia; c/o HOTEL LOS VINEDOS, La Union, Valle, Colombia; c/o GRAJALES S.A., La Union, Valle, Colombia; c/o EXPLOTACIONES AGRICOLAS Y GANADERAS LA LORENA S.C.S., Cali, Colombia; Calle 52 No. 28E–30, Cali, Colombia; DOB 9 Oct 1968; Cedula No. 31981533 (Colombia) (individual) [SDNT]

HENAO VDA. DE BOTERO, Maria Yolanda, c/o ALFA PHARMA S.A., Bogota, Colombia; DOB 21 Jun 1929; Cedula No. 29070489 (Colombia) (individual) [SDNT]

HERMANN (vessel) [CUBA]

HERMANN SHIPPING CORP., INC., Panama [CUBA]

HERNANDEZ ARBOLEDA, Sandra Milena, c/o COMERCIALIZADORA DE CAFE DEL OCCIDENTE CODECAFE LTDA., Pereira, Risaralda, Colombia; c/o INVERSIONES MACARNIC PATINO Y CIA S.C.S., Pereira, Risaralda, Colombia; Cedula No. 42109136 (Colombia) (individual) [SDNT]

HERNANDEZ CANOBAS, Hector Fabio, c/o INVERSIONES BETANIA LTDA., Cali, Colombia; c/o INVERSIONES EL PENON S.A., Cali, Colombia; DOB 21 Jun 1958; Cedula No. 16615804 (Colombia) (individual) [SDNT]

HERNANDEZ CARBALLOSA, Alexis Eneilo, Milan, Italy (individual) [CUBA]

HERNANDEZ MORENO, Arturo, c/o INMOBILIARIA EL ESCORPION DEL NORTE S.A. DE C.V., Chihuahua, Mexico; Calle 16 No. 4016, Chihuahua, Chihuahua, Mexico; c/o DEL NORTES CARNES FINAS SAN IGNACIO S.A. DE C.V., Chihuahua, Mexico; c/o INMOBILIARIA EL PRESON S.A. DE C.V., Chihuahua, Mexico; DOB 27 Nov 1962; POB Hidalgo Del Parral, Chihuaua, Mexico; citizen Mexico; nationality Mexico; R.F.C. HEMA–621127 (Mexico) (individual) [SDNTK]

HERNANDEZ ORTEGA, Cesar Alejandro, c/o LIZZY MUNDO INTERIOR, Guadalajara, Mexico; DOB 28 Oct 1975; POB Guadalajara, Jalisco, Mexico; C.U.R.P. HEOC751028HJCRRS09 (Mexico); Passport 140022479 (Mexico) (individual) [SDNT]

HERNANDEZ PULIDO, Maria Elda, c/o Farmacia Vida Suprema, S.A. DE C.V., Tijuana, Baja California, Mexico; c/o Distribuidora Imperial De Baja California, S.A. de C.V., Tijuana, Baja California, Mexico; Calle Juan de Dios Peza 1015, Colonia Mexico 22150, Tijuana, Baja California, Mexico; DOB 18 Aug 1971; POB Baja California Norte, Mexico (individual) [SDNTK]

HERNANDEZ SAN MARTIN, Ricardo Arturo, Calle Huancavelica 270, URB Santa Patricia, Lima, Peru; c/o AVIANDINA S.A.C., Lima, Peru; c/o PERU GLOBAL TOURS S.A.C., Lima, Peru; DOB 04 Jul 1955; LE Number 10321329 (Peru) (individual) [SDNTK]

HERNANDEZ SOMERO, Urbano, c/o INMOBILIARIA LA PROVINCIA S.A. DE C.V., Tijuana, Baja California, Mexico; c/o COMPLEJO TURISTICO OASIS S.A. DE C.V., Rosarito, Baja California, Mexico; c/o INMOBILIARIA TIJUANA COSTA S.A. DE C.V., Tijuana, Baja California, Mexico; Avenida Manuela Herrera 592, Colonia Rio Reforma CP 22000, Tijuana, Baja California, Mexico; C. Mision de Mulege 2993, Colonia Zona Urbana Rio Tijuana, Tijuana, Baja California, Mexico; c/o PLAYA MAR S.A. DE C.V., Tijuana, Baja California, Mexico; C. Hermosillo, Colonia Rancho El Grande CP 22000, Tijuana, Baja California, Mexico; Avenida Del Bosque 4640, Colonia Jardines de Chapultepec, Tijuana, Baja California, Mexico; Pda. Del Cobre 0, Colonia Puerto De Hierro CP 22000, Tijuana, Baja California, Mexico; Avenida Manuela Herrera 590, Colonia Rio Reforma CP 22000, Tijuana, Baja California, Mexico; Pda. Mercurio, Colonia Puerta De Hierro CP 22330, Tijuana, Baja California, Mexico; c/o INMOBILIARIA ESTADO 29 S.A. DE C.V., Tijuana, Baja California, Mexico; DOB 25 May 1943; POB Mexicali, Baja California, Mexico; C.U.R.P. # HEXU430525HBCRXR07 (Mexico); alt. C.U.R.P. # HESU430525HBCRMR05 (Mexico); alt. C.U.R.P. # HESU430525HBCRMR13 (Mexico); Immigration No. A38839964 (United States) (individual) [SDNTK]

HERNANDEZ VASQUEZ, Gladys Darlen, Carrera 34A No. 10–27 Sur, Bogota, Colombia; c/o COOPIFARMA, Bucaramanga, Colombia; c/o CAJA SOLIDARIA, Bogota, Colombia; c/o COPSERVIR LTDA., Bogota, Colombia; c/o FARMAVISION LTDA., Bogota, Colombia; Cedula No. 52026909 (Colombia) (individual) [SDNT]

HERNANDEZ ZEA, Ana Elvia, Carrera 35 No. 53–53, Bogota, Colombia; c/o GREEN ISLAND S.A., Bogota, Colombia; c/o INTERCONTINENTAL DE AVIACION S.A., Bogota, Colombia; c/o INTERCONTINENTAL DE FINANCIACION AEREA S.A., Bogota, Colombia; DOB 28 Dec 1949; POB Tibasosa, Boyaca, Colombia; Cedula No. 41503907 (Colombia); Passport AG686192 (Colombia); alt. Passport AE591041 (Colombia); alt. Passport AC594144 (Colombia) (individual) [SDNT]

HERNANDEZ ZEA, Luis Antonio (a.k.a. ''EL CAPITAN''), c/o ASOCIACION TURISTICA INTERNACIONAL S.C.S., Bogota, Colombia; c/o GREEN ISLAND S.A., Bogota, Colombia; c/o LARGO LEASING LTD., George Town, Cayman Islands; c/o INTERCONTINENTAL DE AVIACION S.A., Bogota, Colombia; c/o INTERCONTINENTAL DE FINANCIACION AEREA S.A., Bogota, Colombia; c/o AEROVIAS ATLANTICO LTDA. AEROATLANTICO LTDA., Baranquilla, Colombia; Carrera 53 No. 35–35, Bogota, Colombia; c/o CIA CONSTRUCTORA Y COMERCIALIZADORA DEL SUR LTDA., Bogota, Colombia; c/o INVERSIONES Y COMERCIALIZADORA INCOM LTDA., Cali, Colombia; c/o TRANS PACIFIC WORLD LEASING LIMITED, Port Vila, Vanuatu; DOB 7 May 1960; POB Bogota, Colombia; Cedula No. 79252957 (Colombia); Passport P006320 (Colombia); alt. Passport PE022166 (Colombia) (individual) [SDNT]

HERNANDEZ, Oscar, Mz. 21 Casa 5 Barrio San Fernando, Pereira, Colombia; c/o TAURA S.A., Cali, Colombia; Cedula No. 6157940 (Colombia) (individual) [SDNT]

HERRAN SAAVEDRA, Victor Hugo, c/o GALAPAGOS S.A., Cali, Colombia; Cedula No. 16447166 (Colombia) (individual) [SDNT]

HERRERA AGUILERA, Augusto, c/o FARMAVISION LTDA., Bogota, Colombia; Cedula No. 17067884 (Colombia) (individual) [SDNT]

HERRERA AGUILERA, Gabriel, c/o DROGAS LA REBAJA BUCARAMANGA S.A., Bucaramanga, Colombia; c/o COOPDISAN, Bucaramanga, Colombia; Cedula No. 91236347 (Colombia); Passport 91236347 (Colombia) (individual) [SDNT]

HERRERA BUITRAGO, Alvaro, c/o INDUSTRIA AVICOLA PALMASECA S.A., Cali, Colombia; Avenida 6N No. 25–14, Cali, Colombia; DOB 10 Oct 1955; Cedula No. 16258303 (Colombia) (individual) [SDNT]

HERRERA BUITRAGO, Helmer (a.k.a. ''H7''; a.k.a. ''PACHO''), Cali, Colombia; DOB 24 Aug 1951; alt. DOB 5 Jul 1951; Cedula No. 16247821 (Colombia); Passport J287011 (Colombia) (individual) [SDNT]

HERRERA BUITRAGO, Stella, c/o INMOBILIARIA GALES LTDA., Bogota, Colombia; c/o INVERSIONES GEMINIS S.A., Cali, Colombia; c/o INVERSIONES HERREBE LTDA., Cali, Colombia; c/o INDUSTRIA AVICOLA PALMASECA S.A., Cali, Colombia; c/o COMERCIALIZADORA EXPERTA Y CIA. S. EN C., Bogota, Colombia; c/o AGROPECUARIA Y REFORESTADORA HERREBE LTDA., Cali, Colombia; Avenida 1B Oeste No. 1–44 apt. 602, Medeira Building, Cali, Colombia; c/o CONSTRUCTORA DIMISA LTDA., Cali, Colombia; c/o SOCOVALLE LTDA., Cali, Colombia; c/o CONCRETOS CALI S.A., Cali, Colombia; c/o COMERCIAL DE NEGOCIOS CLARIDAD Y CIA., Bogota, Colombia; DOB 7 Oct 1953; Cedula No. 31143871 (Colombia); Passport AD031302 (Colombia) (individual) [SDNT]

HERRERA BUITRAGO, William, c/o W. HERRERA Y CIA. S. EN C., Cali, Colombia; DOB 29 Nov 1964; Cedula No. 16716887 (Colombia); Passport P046550 (Colombia) (individual) [SDNT]

HERRERA CARDONA, Libia Constanza, c/o COPSERVIR LTDA., Bogota, Colombia; c/o TRIMARK LTDA., Bogota, Colombia; Cedula No. 66978250 (Colombia) (individual) [SDNT]

HERRERA GARCIA, Otto Roberto (a.k.a. VILLAGRAN, Francisco), Guatemala; DOB 14 Mar 1965; citizen Guatemala (individual) [SDNTK]

HERRERA INFANTE, Alberto, c/o CONSTRUCTORA DIMISA LTDA., Cali, Colombia; c/o INDUSTRIA AVICOLA PALMASECA S.A., Cali, Colombia; DOB 10 Apr 1960; Cedula No. 16637518 (Colombia) (individual) [SDNT]

HERRERA RAMIREZ, Giselle, c/o INVERSIONES HERREBE LTDA., Cali, Colombia; c/o AGROPECUARIA Y REFORESTADORA HERREBE LTDA., Cali, Colombia; c/o INDUSTRIA AVICOLA PALMASECA S.A., Cali, Colombia (individual) [SDNT]

HERRERA RAMIREZ, Linda Nicolle, c/o INDUSTRIA AVICOLA PALMASECA S.A., Cali, Colombia (individual) [SDNT]

HESONG TRADING CORPORATION, Pyongyang, Korea, North [NPWMD]

HEYATUL ULYA, Mogadishu, Somalia [SDGT]

HEYWOOD NAVIGATION CORPORATION, c/o MELFI MARINE CORPORATION S.A., Oficina 7, Edificio Senorial, Calle 50, Apartado 31, Panama City 5, Panama [CUBA]

HI TECH GROUP (a.k.a. HIGH TECH GROUP; a.k.a. HIGHTECH GROUP; a.k.a. HITECH GROUP), Amarat Street No. 31, P.O. Box 44690, Khartoum, Sudan; Website www.htg-sdn.com (Sudan) [SUDAN]

HICOM (a.k.a. HI-COM), Khartoum, Sudan [SUDAN]

HICONSULT (a.k.a. HI-CONSULT), Khartoum, Sudan [SUDAN]

HIELO CRISTAL Y REFRIGERACION LTDA. (a.k.a. CUATRO FRIO), Carrera 8 No. 32–16, Cali, Colombia; Carrera 44A No. 9C–85, Bogota, Colombia; NIT # 890303017–5 (Colombia) [SDNT]

HIGHER INSTITUTE OF APPLIED SCIENCE AND TECHNOLOGY (a.k.a. HIAST; a.k.a. INSTITUT DES SCIENCES APPLIQUEES ET DE TECHNOLOGIE; a.k.a. INSTITUT SUPERIEUR DES SCIENCES APPLIQUEES ET DE TECHNOLOGIE; a.k.a. ISAT; a.k.a. ISSAT), P.O. Box 31983, Barzeh, Damascus, Syria [NPWMD]

HIGUERA GUERRERO, Gilberto (a.k.a. ''EL GILILLO''); DOB 14 Apr 1968; nationality Mexico (individual) [SDNTK]

HIGUERA GUERRERO, Ismael; DOB 17 Mar 1961; POB Mexico (individual) [SDNTK]

HIJAZI, Riad (a.k.a. AL-AMRIKI, Abu-Ahmad; a.k.a. AL-HAWEN, Abu-Ahmad; a.k.a. AL-MAGHRIBI, Rashid; a.k.a. AL-SHAHID, Abu-Ahmad; a.k.a. HIJAZI, Raed M), Jordan; DOB 1968; POB California, USA; SSN 548–91–5411 (United States) (individual) [SDGT]

HILAL TRAVEL AGENCY (a.k.a. HILAL TRAVEL C.A.), Avenida Baralt, Esquina Maderero, Edificio Santa Isabel, Caracas, Venezuela; Business Registration Document # 80074366 (Venezuela) [SDGT]

HILAL, Musa (a.k.a. HILAL, Moussa); DOB circa 1960; POB Kutum, North Darfur, Sudan; Sheikh and Paramount Chief of the Jalul Tribe in North Darfur (individual) [DARFUR]

HIMMAT, Ali Ghaleb, Via Posero 2, Campione d'Italia CH–6911, Switzerland; DOB 16 Jun 1938; POB Damascus, Syria; citizen Switzerland; alt. citizen Tunisia (individual) [SDGT]

HIR, Zulkifli Bin Abdul (a.k.a. HIR, Musa Abdul; a.k.a. HIR, Zulkifli Abdul; a.k.a. ZULKIFLI, Abdul Hir bin; a.k.a. ZULKIFLI, Bin Abdul Hir; a.k.a. ''MUSA ABDUL''); DOB 5 Jan 1966; alt. DOB 5 Oct 1966; POB Malaysia (individual) [SDGT]

HI-TECH CHEMICALS, Khartoum, Sudan [SUDAN]

HI-TECH PETROLEUM GROUP, Khartoum, Sudan [SUDAN]

HIZBALLAH (a.k.a. ANSAR ALLAH; a.k.a. FOLLOWERS OF THE PROPHET MUHAMMED; a.k.a. ISLAMIC JIHAD; a.k.a. ISLAMIC JIHAD FOR THE LIBERATION OF PALESTINE; a.k.a. ISLAMIC JIHAD ORGANIZATION; a.k.a. ORGANIZATION OF RIGHT AGAINST WRONG; a.k.a. ORGANIZATION OF THE OPPRESSED ON EARTH; a.k.a. PARTY OF GOD; a.k.a. REVOLUTIONARY JUSTICE ORGANIZATION) [SDT] [FTO] [SDGT]

HLA, Aung (a.k.a. ''AH BANG''; a.k.a. ''AH PANG''; a.k.a. ''HLA AUNG''), c/o YANGON AIRWAYS COMPANY LIMITED, Rangoon, Burma; c/o TET KHAM CONSTRUCTION COMPANY LIMITED, Mandalay, Burma; No. 7, Corner of Inya Road & Oo Yin Street, Ward. 10, Kamayut, Yangon, Burma; c/o TET KHAM GEMS CO., LTD., Yangon, Burma; Passport 497797 (Burma); alt. Passport 706634 (Burma) (individual) [SDNTK]

HO, Chun Ting (a.k.a. HAW, Aik; a.k.a. HEIN, Aung; a.k.a. HO, Aik; a.k.a. HO, Chung Ting; a.k.a. HO, Hsiao; a.k.a. HOE, Aik; a.k.a. TE, Ho Chun; a.k.a. TIEN, Ho Chun; a.k.a. WIN, Aung; a.k.a. ''AIK HAW''; a.k.a. ''HO CHUN TING''; a.k.a. ''HSIO HO''), c/o HONG PANG LIVESTOCK DEVELOPMENT COMPANY LIMITED, Burma; c/o HONG PANG TEXTILE COMPANY LIMITED, Yangon, Burma; c/o TET KHAM CONSTRUCTION COMPANY LIMITED, Mandalay, Burma; 7, Corner of Inya Road and Oo Yin street, Kamayut Township, Rangoon, Burma; 11 Ngu Shwe Wah Road, Between 64th and 65th Streets, Chan Mya Thar Zan Township, Mandalay, Burma; No. 7 Oo Yim Road Kamayut TSP, Rangoon, Burma; The Anchorage, Alexandra Road, Apt. 370G, Cowry Building (Lobby 2, Singapore; c/o HONG PANG GEMS & JEWELLERY COMPANY LIMITED, Mandalay, Burma; c/o HONG PANG GENERAL TRADING COMPANY, LIMITED, Kyaington, Burma; 89 15th Street, Lanmadaw Township, Rangoon, Burma; c/o TET KHAM GEMS CO., LTD., Yangon, Burma; c/o HONG PANG MINING COMPANY LIMITED, Yangon, Burma; c/o TET KHAM (S) PTE. LTD., Singapore; c/o HONG PANG ELECTRONIC INDUSTRY CO., LTD., Yangon, Burma; DOB 18 Jul 1965; National ID No. 176089 (Burma); alt. National ID No. 272851 (Singapore); alt. National ID No. 029430 (Burma); alt. National ID No. 000016 (Burma); Passport A043850 (Burma) (individual) [SDNTK]

HODWALKER MARTINEZ, Martin David (a.k.a. ''TILO''), c/o MARTIN HODWALKER M. Y CIA. S. EN C., Barranquilla, Colombia; c/o DESARROLLO GEMMA CORPORATION, Panama City, Panama; c/o VERANILLO DIVE CENTER LTDA., Barranquilla, Colombia; c/o YAMAHA VERANILLO DISTRIBUIDORES, Barranquilla, Colombia; DOB 26 Dec 1968; POB Colombia; Cedula No. 8534760 (Colombia); Passport AF465508 Colombia (individual) [SDNT]

HOJATI, Mohsen, c/o Fajr Industries Group, Tehran, Iran; DOB 28 Sep 1955; POB Najafabad, Iran; nationality Iran; Passport G4506013 (Iran) (individual) [NPWMD]

HOLA SUN HOLIDAYS LIMITED, 146 Beaver Creek Road, Richmond Hill, Ontario, L4B 1C2, Canada [CUBA]

HOLGUIN SARRIA, Alvaro, c/o DISTRIBUIDORA DE DROGAS CONDOR LTDA., Bogota, Colombia; c/o DISTRIBUIDORA MIGIL LTDA., Cali, Colombia; c/o DEPOSITO POPULAR DE DROGAS S.A., Cali, Colombia; c/o DERECHO INTEGRAL Y CIA. LTDA., Cali, Colombia; DOB 28 Oct 1946; Cedula No. 14950269 (Colombia) (individual) [SDNT]

HOLY LAND FOUNDATION FOR RELIEF AND DEVELOPMENT (f.k.a. OCCUPIED LAND FUND), P.O. Box 832390, Richardson, TX 75083; Hebron, West Bank; Jenin, West Bank; Shurta Street, 'Amira al-Ramuna, 4th Floor, Ramallah, West Bank; 525 International Parkway, Suite 509, Richardson, TX 75081; 345 E. Railway Avenue, Paterson, NJ 07503; 9250 S. Harlem Avenue, Bridgeview, IL; Gaza Strip, undetermined; 12798 Rancho Penasquitos Blvd., Suite F, San Diego, CA 92128; US FEIN 95–4227517; and other locations within the United States [SDT] [SDGT]

HONG PANG ELECTRONIC INDUSTRY CO., LTD. (f.k.a. GOLD MOUNT INDUSTRIAL COMPANY LIMITED; a.k.a. HONG PANG ELECTRONIC INDUSTRIES LIMITED), Hong Pang Wire Showroom, Room D, 80–81 35th Street, Mandalay, Burma; 216, Corner of 49th St. and Maha Bandoola Rd., Pazundaung, Yangon, Burma [SDNTK]

HONG PANG GEMS & JEWELLERY (HK) CO. LIMITED (a.k.a. HONG KONG HONG PANG GEMS & JEWELLERY CO., LTD.), 12th Floor C, Jade Exchange Center, 513–531, Canton Road, Kowloon, Hong Kong; Room 3605 36/F Wu Chung House, 213 Queen's Road East, Wan Chai, Hong Kong; 6A, 6D North Section, 7th Building, Chilung Park, 68 Sin Chung St., East City Drive, Beijing, China; 28th and 29th Floor, Overseas Friendship Building, 2, Yun Chun Road, Lo Hu, Sham Cheng, Kuang Tung, China; 11, Huang Ching (Gold) Road, Between 64/65 Street, Myo Thit, Mandalay, Burma; No. 19, Hung Hua Bridge, Kunming, Yunnan, China; Certificate of Incorporation Number 766810 (Hong Kong) [SDNTK]

HONG PANG GEMS & JEWELLERY COMPANY LIMITED, 11, Ngui Shwe Wah Road, Between 64th and 65th Street, Chan Maya Thar Si Township, Mandalay, Burma [SDNTK]

HONG PANG GENERAL TRADING COMPANY, LIMITED (f.k.a. HONG PANG IMPORT EXPORT GENERAL TRADING COMPANY LIMITED), 216/222, Room C/D, (G/F), Bo Myat Tun Housing, Mahabandoola Road, Pazundaung Township, Yangon, Burma; 18, Kyaing Ngan St., Qtr. 2, Kyaington, Burma; 102, Lanmadaw St., Sarsy Qtr., Magway, Burma; 157, Pyihtaungsu Rd., Yuzana Qtr., Myitkyina, Burma; 9, West of Market, Haw Gone Qtr., Taunggyi, Burma [SDNTK]

HONG PANG LIVESTOCK DEVELOPMENT COMPANY LIMITED, Burma [SDNTK]

HONG PANG MINING COMPANY LIMITED, No. 216/222, Room No. C/D Ground Floor, Bo Myat Tun Housing, Mahabandoola Road, Pazundaung Township, Yangon, Burma [SDNTK]

HONG PANG TEXTILE COMPANY LIMITED, No. 216/222, Room C/D, Ground Floor, Bo Myat Tun Housing, Mahabandoola Road, Pazundaung Township, Yangon, Burma [SDNTK]

HOOKER TAYLOR, Javier Arnulfo (a.k.a. HOOKER POMARE, Javier), c/o ROCK FISH IMPORT EXPORT E.U., San Andres, Colombia; c/o COOPERATIVA DE SERVICIO DE TRANSPORTE DE CARGA DE COLOMBIA LTDA., Barranquilla, Colombia; DOB 19 Feb 1971; POB San Andres, Colombia; Cedula No. 18001893 (Colombia) (individual) [SDNT]

HORMUZ 2; Vessel Registration Identification IMO 7904580 (vessel) [NPWMD]

HOTEL LA CASCADA S.A. (f.k.a. CENTRO RECREACIONAL LA CASCADA LTDA.), Carrera 12 Avenida 25 Esquina, Girardot, Colombia; NIT # 890601336–8 (Colombia) [SDNT]

HOTEL MAX (a.k.a. HOTEL CHAUNG THA BEACH RESORT), No. 1 Ywama Curve, Ba Yint Naung Road, Block-2, Hlaing Township, Yangon, Burma [BURMA]

HOTELES E INMUEBLES DE COLOMBIA LTDA. (a.k.a. HOTINCOL), Calle 74 No. 53–30, Barranquilla, Colombia; NIT # 800013139–3 (Colombia) [SDNT]

HOVE, Richard Chemist; DOB 23 Sep 1939; Passport ZD002376 (Zimbabwe); Politburo Secretary for Economic Affairs (individual) [ZIMBABWE]

HTOO GROUP OF COMPANIES, 5 Pyay Road, Hlaing Township, Yangon, Burma [BURMA]

HTOO TRADING COMPANY LIMITED (a.k.a. HTOO TRADING GROUP COMPANY), 5 Pyay Road, Hlaing Township, Yangon, Burma [BURMA]

HTOO WOOD PRODUCTS PTE. LIMITED (a.k.a. HTOO FURNITURE; a.k.a. HTOO WOOD; a.k.a. HTOO WOOD PRODUCTS; a.k.a. HTOO WOOD-BASED INDUSTRY), Shwe Pyithar T/S, Tangon, Burma; No. 21 Thukha Waddy Road, Yankin T/S, Yangon, Burma; 3 Shenton Way, #24–02 Shenton House, Singapore, 068805, Singapore; 5 Pyay Road, Hlaing Township, Yangon, Burma [BURMA]

HTWE, Aung; DOB 1 Feb 1943; citizen Burma; nationality Burma; Lieutenant-General; Chief of Armed Forces Training; Member, State Peace and Development Council (individual) [BURMA]

HUBER, Albert Friedrich Armand (a.k.a. HUBER, Ahmed), Mettmenstetten, Switzerland; DOB 1927 (individual) [SDGT]

HUERTAS RAMIREZ, Jorge Luis, c/o LABORATORIOS KRESSFOR DE COLOMBIA S.A., Bogota, Colombia; c/o REPRESENTACIONES Y DISTRIBUCIONES HUERTAS Y ASOCIADOS S.A., Bogota, Colombia; c/o PRODUCTOS GALO Y CIA. LTDA., Bogota, Colombia; c/o DECAFARMA S.A., Bogota, Colombia; DOB 2 Apr 1951; Cedula No. 19134241 (Colombia); Passport 19134241 (Colombia) (individual) [SDNT]

HUNTSLAND (vessel) [CUBA]

HUNTSLAND NAVIGATION CO. LTD., c/o NIPPON CARIBBEAN SHIPPING CO. LTD., 8th Floor, Tsukiji Hosoda Building, 2–1, Tsukiji 2-chome, Chuo-ku, Tokyo, Japan [CUBA]

HUNTSVILLE (vessel) [CUBA]

HUNTSVILLE NAVIGATION CO. LTD., c/o NIPPON CARIBBEAN SHIPPING CO. LTD., 8th Floor, Tsukiji Hosoda Building, 2–1, Tsukiji 2-chome, Chuo-ku, Tokyo, Japan [CUBA]

HURACAN (vessel) [CUBA]

HURTADO ROMERO, Jairo Jose, c/o ARIZONA S.A., Cartago, Colombia; Carrera 8N No. 17A–12, Cartago, Colombia; c/o MAQUINARIA TECNICA Y TIERRAS LTDA., Cali, Colombia; Carrera 42 No. 5B–81, Cali, Colombia; Cedula No. 13809079 (Colombia); Passport 13809079 (Colombia) (individual) [SDNT]

HUSAIN, Ali Saleh (a.k.a. 'ALA'LAH, 'Ali Salih Husayn; a.k.a. AL-TABUKI, Ali Saleh Husain; a.k.a. AL-TABUKI, 'Ali Salih Husayn al-Dhahak; a.k.a. AL-YEMENI, Abu Dhahak; a.k.a. DAHHAK, Abu; a.k.a. 'ULA'LAH, 'Ali Salih Husayn); DOB circa 1970; POB al-Hudaydah, Yemen; nationality Yemen; Individual's height is 5 feet 9 inches. (individual) [SDGT]

HUSAYN ALAYWAH, Al-Sayyid Ahmad Fathi; DOB 30 Jul 1964; POB Suez, Egypt; nationality Egypt (individual) [SDGT]

HUSSEIN, Mazen Ali (a.k.a. SALAH MUHAMAD, Issa), Schwabisch Hall Prison, Germany; Branderstrasse 28, Augsburg 86154, Germany; DOB 1 Jan 1982; alt. DOB 1 Jan 1980; POB Baghdad, Iraq; nationality Iraq; Travel Document Number A0144378 (Germany) (individual) [SDGT]

HUWAYSH, Abd-al-Tawab Mullah; DOB 1957; alt. DOB 14 Mar 1942; POB Mosul or Baghdad, Iraq; nationality Iraq; deputy prime minister; director, Organization of Military Industrialization (individual) [IRAQ2]

HYALITE (vessel) [CUBA]

HYDE, Clive Norman (a.k.a. HYDE SR., Clive Norman; a.k.a. ''MR. HYDE''); DOB 8 Apr 1956; POB Belize (individual) [SDNT]

HYSENI, Xhemajl; DOB 15 Aug 1958; POB Lojane, Macedonia (individual) [BALKANS]

I.P.C. INTERNATIONAL LIMITED, United Kingdom [IRAQ2]

I.P.C. MARKETING LIMITED, United Kingdom [IRAQ2]

IAC INTERNATIONAL INC. (a.k.a. I A C INTERNATIONAL INC.; a.k.a. INTERNATIONAL AIRLINE CONSULTING), 8940 NW 24 TERRACE, Miami, FL 33122; Business Registration Document # P9800004558 (United States); US FEIN 65–0842701 [BPI-SDNTK]

IB OF AMERICA HOLDINGS INC., 811 S. Central Expwy, Ste 210, Richardson, TX 75080 [LIBERIA]

IBADAN LTDA., Calle 28 No. 27–18, Tulua, Valle, Colombia; NIT # 800112215–1 (Colombia) [SDNT]

IBANEZ LOPEZ, Raul Alberto, c/o INCOES LTDA., Cali, Colombia; c/o INMOBILIARIA U.M.V. S.A., Cali, Colombia; c/o GANADERIAS DEL VALLE S.A., Cali, Colombia; c/o DISTRIBUIDORA DE ELEMENTOS PARA LA CONSTRUCCION S.A., Cali, Colombia; c/o AGROPECUARIA LA ROBLEDA S.A., Cali, Colombia; DOB 11 Apr 1960; Cedula No. 16640123 (Colombia) (individual) [SDNT]

IBRAHIM, Dawood (a.k.a. ANIS, Ibrahim Shaikh Mohd; a.k.a. AZIZ, Abdul Hamid Abdul; a.k.a. DILIP, Aziz; a.k.a. EBRAHIM, Dawood; a.k.a. HASAN, Shaikh Daud; a.k.a. HASSAN, Dawood; a.k.a. IBRAHIM, Anis; a.k.a. IBRAHIM, Dawood Sheik; a.k.a. KASKAR, Dawood Ibrahim; a.k.a. REHMAN, Shaikh Ismail Abdul; a.k.a. SABRI, Dawood; a.k.a. SAHEB, Amir; a.k.a. SETH, Iqbal), 33–36, Pakmodiya Street, Haji Musafirkhana, Dongri, Bombay, India; 617 CP Berar Society, Block 7–8, Karachi, Pakistan; White House, Al-Wassal Road, Jumeira, Dubai, United Arab Emirates; House No. 10, Hill Top Arcade, Defence Housing Authority, Karachi, Pakistan; House No. 37, Street 30, Phase V, Defence Housing Authority, Karachi, Pakistan; Moin Palace, 2nd Floor, Opp. Abdullah Shah Gazi Dargah, Clifton, Karachi, Pakistan; DOB 26 Dec 1955; alt. DOB 31 Dec 1955; POB Ratnagiri, Maharashtra, India; citizen India; alt. citizen United Arab Emirates; alt. citizen Pakistan; nationality India; Passport F–823692 (Yemen) issued 02 Sep 1989; alt. Passport G–869537 (Pakistan); alt. Passport A–333602 (India) issued 04 Jun 1985; alt. Passport P–537849 (India) issued 30 Jul 1979; alt. Passport G–866537 (Pakistan) issued 12 Aug 1991; alt. Passport A–501801 (India) issued 26 Jul 1985; alt. Passport A–717288 (United Arab Emirates) issued 18 Aug 1985; alt. Passport K–560098 (India) issued 30 Jul 1975; alt. Passport V–57865 (India) issued 03 Oct 1983; alt. Passport R–841697 (India) issued 26 Nov 1981; alt. Passport M–110522 (India) issued 13 Nov 1978 (individual) [SDGT] [SDNTK]

IBRAHIM, Haji (a.k.a. IBRAHIM, Haji Ehai; a.k.a. KHAN AFRIDI, Haji Ibrahim; a.k.a. KHAN, Haji Ibrahim); DOB 28 Sep 1957; POB Pakistan (individual) [SDNTK]

ICDB (a.k.a. ISLAMIC CO-OPERATIVE DEVELOPMENT BANK), P.O. Box 62, Khartoum, Sudan [SUDAN]

IDARRAGA ESCANDON, Herned (a.k.a. IDARRAGA ESCANDON, Hernet), c/o GRACADAL S.A., Cali, Colombia; c/o DISMERCOOP, Cali, Colombia; Carrera 25A No. 49–73, Cali, Colombia; DOB 22 Dec 1954; Cedula No. 16595668 (Colombia) (individual) [SDNT]

IDARRAGA ORTIZ, Jaime, c/o INVERSIONES CAMINO REAL S.A., Cali, Colombia; c/o DEPOSITO POPULAR DE DROGAS S.A., Cali, Colombia; c/o DISTRIBUIDORA MIGIL LTDA., Cali, Colombia; c/o LABORATORIOS BLAIMAR DE COLOMBIA S.A., Bogota, Colombia; c/o INTERAMERICA DE CONSTRUCCIONES S.A., Cali, Colombia; c/o BLANCO PHARMA S.A., Bogota, Colombia; c/o DISTRIBUIDORA DE DROGAS CONDOR LTDA., Bogota, Colombia; c/o DISTRIBUIDORA DE DROGAS LA REBAJA S.A., Bogota, Colombia; c/o FARMATODO S.A., Bogota, Colombia; c/o DROGAS LA REBAJA BOGOTA S.A., Bogota, Colombia; c/o LABORATORIOS KRESSFOR DE COLOMBIA S.A., Bogota, Colombia; DOB 14 Dec 1941; Cedula No. 8237011 (Colombia) (individual) [SDNT]

IDARRAGA ORTIZ, Rogelio, c/o CAJA SOLIDARIA, Bogota, Colombia; c/o COPSERVIR LTDA., Bogota, Colombia; DOB 10 Jan 1944; Cedula No. 3417272 (Colombia); Passport 3417272 (Colombia) (individual) [SDNT]

IDARRAGA RIOS, Andres Felipe, c/o 2000-DODGE S.L., Madrid, Spain; c/o 2000 DOSE E.U., Cali, Colombia; C Y S MEDIOS E.U., Cali, Colombia; Cedula No. 16274109 (Colombia); Passport 16274109 (Colombia) (individual) [SDNT]

IDARRAGA RODRIGUEZ, Mauricio, c/o ASPOIR DEL PACIFICO Y CIA. LTDA., Cali, Colombia; c/o FUNDASER, Cali, Colombia; DOB 16 Mar 1970; Cedula No. 94307887 (Colombia); Passport 94307887 (Colombia) (individual) [SDNT]

IKHTIYAR, Hisham (a.k.a. AL IKHTEYAR, Hisham; a.k.a. AL IKHTIYAR, Hisham; a.k.a. AL-IKHTIYAR, Hisham; a.k.a. AL-IKHTIYAR, Hisham Ahmad; a.k.a. BAKHTIAR, Hisham; a.k.a. BAKHTIYAR, Hisham; a.k.a. ICHTIJAR, Hisham; a.k.a. IKHTEYAR, Hisham), Maliki, Damascus, Syria; DOB 1941; Major General; Director, Syria Ba'ath Party Regional Command National Security Bureau (individual) [SYRIA]

ILOVIN S.A., Avenida 15 No. 123–30, Local 1–13, Bogota, Colombia; NIT # 800141304–0 (Colombia) [SDNT]

IMPERATORI, Julio A., 20 Ironmonger Lane, London EC2V 8EY, United Kingdom; Managing Director, Havana International Bank (individual) [CUBA]

IMPORT MAPRI LTDA., Carrera 7 No. 17–01 of. 603, Bogota, Colombia; Carrera 16 Bis No. 148–37, Bogota, Colombia; NIT # 830079014–4 (Colombia) [SDNT]

IMPORTADORA Y COMERCIALIZADORA LTDA. (a.k.a. IMCOMER), Avenida 6N y Avenida 4 No. 13N–50 of. 1201, Cali, Colombia; NIT # 800152058–0 (Colombia) [SDNT]

IMPRISA, Spain [CUBA]

IMPRISA, S.A., Panama [CUBA]

INCOMMERCE S.A., Calle 13 No. 66–14, Cali, Colombia; NIT # 805023544–4 (Colombia) [SDNT]

INDABURU LUENGAS, Pedro Enrique, c/o COMERCIALIZADORA MOR GAVIRIA S.A., Quito, Ecuador; c/o INTERNACIONAL DE PROYECTOS INMOBILIARIOS S.A., Quito, Ecuador; c/o COMERCIALIZADORA MORDUR S.A., Quito, Ecuador; DOB 29 Jun 1948; POB Bogota, Colombia; Cedula No. 19074171 (Colombia); alt. Cedula No. 1719011619 (Ecuador); RUC # 171901161–9 (Ecuador) (individual) [SDNT]

INDIO VITORIO S. DE P.R. DE R.L. DE C.V., Saucillo, Chihuahua, Mexico; R.F.C. IVI–030311–1L6 (Mexico) [SDNTK]

INDUSTRIA DE PESCA SOBRE EL PACIFICO S.A (a.k.a. INPESCA S.A.), Av. Simon Bolivar Km. 5 El Pinal, Buenaventura, Colombia; Km. 5 El Pinal, Buenaventura, Colombia; NIT # 890302172–4 (Colombia) [SDNT]

INDUSTRIA MADERERA ARCA LTDA., Calle 11 No. 32–47 Bodega 41 Arroyohondo, Cali, Colombia; Calle 32 No. 11–41 Bodega 4 Arroyohondo, Cali, Colombia; NIT # 800122866–7 (Colombia) [SDNT]

INDUSTRIAL BANK COMPANY FOR TRADE & DEVELOPMENT LIMITED, Khartoum, Sudan [SUDAN]

INDUSTRIAL BANK OF SUDAN (N.K.A. EL NILEIN INDUSTRIAL DEVELOPMENT BANK GROUP), United Nations Square, P.O. Box 1722, Khartoum, Sudan [SUDAN]

INDUSTRIAL DE GESTION DE NEGOCIOS E.U., Calle 5C No. 41–30, Cali, Colombia; NIT # 805005946–5 (Colombia) [SDNT]

INDUSTRIAL DEVELOPMENT CORPORATION OF ZIMBABWE LTD (a.k.a. INDUSTRIAL DEVELOPMENT CORPORATION OF ZIMBABWE), 93 Park Lane, Harare, Zimbabwe; P.O. Box CY1431, Causeway, Harare, Zimbabwe; Phone 263–4–794805; Fax No. 263–4–250385 [ZIMBABWE]

INDUSTRIAL MINERA Y PECUARIA S.A. (a.k.a. IMPECUA S.A.), Carrera 30 No. 90–82B La Castellana, Bogota, Colombia; NIT # 830000855–1 (Colombia) [SDNT]

INDUSTRIAL PRODUCTION CORPORATION, P.O. Box 1034, El Gamaa Street, Khartoum, Sudan [SUDAN]

INDUSTRIAL RESEARCH AND CONSULTANCY INSTITUTE, P.O. Box 268, Khartoum, Sudan [SUDAN]

INDUSTRIAS AGROPECUARIAS DEL VALLE LTDA., Calle 52 No. 28E–30, Cali, Colombia; Carrera 50 No. 9B–20 of. 07, Cali, Colombia; NIT # 800068160–5 (Colombia) [SDNT]

INDUSTRIAS AGROPECUARIAS EL EDEN S.A., Higueronal Torti, Darien, Panama [SDNT]

INDUSTRIAS DEL ESPIRITU SANTO S.A. (a.k.a. FRUCOSTA; n.k.a. FRUTAS DE LA COSTA S.A.), Carretera Oriental Km. 2 Via Barranquilla, Malambo, Atlantico, Colombia; NIT # 821002015–8 (Colombia) [SDNT]

INFRASTRUCTURE DEVELOPMENT BANK OF ZIMBABWE (a.k.a. ZIMBABWE DEVELOPMENT BANK), P.O. Box 1720, Harare, Zimbabwe; ZDB House, 99 Rotten Row, Harare, Mashonaland East, Zimbabwe; Phone No. 263–4–7501718; Fax No. 263–4–7744225 [ZIMBABWE]

INGASSANA MINES HILLS CORPORATION (a.k.a. INGESSANA HILLS MINES CORPORATION), P.O. Box 2241, Khartoum, Sudan; P.O. Box 1108, Khartoum, Sudan [SUDAN]

INMOBILIARIA AURORA LTDA., Carrera 24F Oeste 3–70, Cali, Colombia; Avenida Canasgordas con Avenida Guali Casa 35, Cali, Colombia; Carrera 4 12–41 piso 15, Edificio Seguros Bolivar, Cali, Colombia; Carrera 38A No. 5E–31, Edificio Conquistadores, Cali, Colombia [SDNT]

INMOBILIARIA BOLIVAR LTDA., Calle 24N No. 6N–21, Cali, Colombia; Calle 17N No. 6N–28, Cali, Colombia; NIT # 890330573–3 (Colombia) [SDNT]

INMOBILIARIA DEL CARIBE LTDA., Calle 74 No. 53–30, Barranquilla, Colombia; NIT # 890108105–1 (Colombia) [SDNT]

INMOBILIARIA EL ESCORIAL LTDA., Carrera 4 No. 12–20 of. 206, Cartago, Valle, Colombia; Carrera 5 No. 18–20 Local 12, Cartago, Valle, Colombia; NIT # 800146869–2 (Colombia) [SDNT]

INMOBILIARIA EL ESCORPION DEL NORTE S.A. DE C.V., Chihuahua, Chihuahua, Mexico [SDNTK]

INMOBILIARIA EL PRESON S.A. DE C.V., Chihuahua, Chihuahua, Mexico [SDNTK]

INMOBILIARIA ESPARTA S.A. DE C.V., Avenida Negrete 220 Local 2B, Colonia Zona Central, Tijuana, Baja California, Mexico; R.F.C. # IES-870805 (Mexico) [SDNTK]

INMOBILIARIA ESTADO 29 S.A. DE C.V., Ocampo 1860 4, Colonia Zona Central, Tijuana, Baja California, Mexico; Entre Juan Sarabia y Plutarco Elias C., Tijuana, Baja California, Mexico; R.F.C. # IEV-950628 (Mexico) [SDNTK]

INMOBILIARIA GALES LTDA., Avenida Caracas No. 59–77 of. 201A, 401B y 405B, Bogota, Colombia; NIT # 800061287–1 (Colombia) [SDNT]

INMOBILIARIA GAXIOLA HERMANOS S.A. DE C.V. (f.k.a. DISTRIBUIDORA DE MUEBLES GAXIOLA HERMANOS; a.k.a. INMOBILIARIA GAXIOLA), Guadalajara, Jalisco, Mexico; Michoacan 404 Inter. 11, Colonia Cerrada Paraiso, Hermosillo, Sonora 83170, Mexico; Blvd. L Encinas numero 581-A, Esquina Truqui, Colonia Pimentel, Hermosillo, Sonora, Mexico; Blvd. Francisco Eusebio km. 177–7, Col. 5 de Mayo, Hermosillo, Sonora 83010, Mexico; Blvd. Jose Maria Morelos s/n y Ave 13 Col Colinas del Bachoco, Hermosilo, Sonora 83000, Mexico; R.F.C. IGH910522UM3 (Mexico); alt. R.F.C. DMG910522 (Mexico) [SDNTK]

INMOBILIARIA HOTELERA DEL CARIBE LTDA. (a.k.a. INHOCAR), Calle 74 No. 53–30, Barranquilla, Colombia; NIT # 800012713–7 (Colombia) [SDNT]

INMOBILIARIA IMTASA LTDA., Carrera 3 No. 11–32 of. 939, Cali, Colombia; Calle 10 No. 4–47 piso 18, Cali, Colombia; NIT # 805012623–0 (Colombia) [SDNT]

INMOBILIARIA LA PROVINCIA S.A. DE C.V., Cuauhtemoc 6046 3 Libertad, Tijuana, Baja California, Mexico; R.F.C. # IPR–931014 (Mexico) [SDNTK]

INMOBILIARIA LINARES LTDA., Carrera 4 No. 12–20 of. 206, Cartago, Valle, Colombia; NIT # 800146860–7 (Colombia) [SDNT]

INMOBILIARIA PASADENA LTDA., Carrera 4 No. 12–20 of. 206, Cartago, Valle, Colombia; NIT # 800146861–4 (Colombia) [SDNT]

INMOBILIARIA QUILICHAO S.A. (f.k.a. AGROPECUARIA B GRAND LTDA.), Avenida 4N No. 6N–61, Apt. 510, Cali, Colombia; NIT # 817002547–1 (Colombia) [SDNT]

INMOBILIARIA TIJUANA COSTA S.A. DE C.V., Entre Abelardo L. Rodriguez y Avenida Del Rio, Tijuana, Baja California, Mexico; Agua Caliente 10440 9, Colonia Aviacion, Tijuana, Baja California, Mexico; R.F.C. # ITC-910503 (Mexico) [SDNTK]

INMOBILIARIA U.M.V. S.A., Carrera 83 No. 6–50, Edificio Alqueria, Torre C, of. 302, Cali, Colombia [SDNT]

INMOBILIUM INVESTMENT CORP., Avenida Frederico Boyd y Calle 51, Edificio Torre Universal, Piso 3, Panama City, Panama; RUC # 4055231267286 (Panama) [SDNT]

INMUEBLES SIERRA VISTA S.A. DE C.V., Hermosillo, Sonora, Mexico [SDNTK]

INSTITUTO NACIONAL DE TURISMO DE CUBA, Spain [CUBA]

INTERAMERICANA DE CONSTRUCCIONES S.A. (f.k.a. ANDINA DE CONSTRUCCIONES S.A.), Calle 12 Norte No. 9N–56, Cali, Colombia; NIT # 800237404–2 (Colombia) [SDNT]

INTERCONSULT, Panama [CUBA]

INTERCONTINENTAL DE AVIACION S.A. (a.k.a. INTER; a.k.a. INTERCONTINENTAL), Avenida El Dorado Entrada 2 Int. 6, Bogota, Colombia; NIT # 860009526–3 (Colombia) [SDNT]

INTERCONTINENTAL DE FINANCIACION AEREA S.A. (a.k.a. INTERFIAR S.A.), Avenida El Dorado Entrada 2 Int. 6, Bogota, Colombia; NIT # 800043810–6 (Colombia) [SDNT]

INTERCREDITOS S.A. (a.k.a. INTERCREDITOS BOGOTA; a.k.a. INTERCREDITOS CALI), Bogota, Colombia; Avenida Roosevelt No. 38–32, piso 2, Cali, Colombia [SDNT]

INTERMARKET HOLDINGS LIMITED, 10th Floor ZB House, 46 Speke Avenue, P.O. Box 3198, Harare, Zimbabwe; Phone No. 263–4–751168; Fax No. 263–4–251029 [ZIMBABWE]

INTERNACIONAL DE DIVISAS S.A., Centro Comercial Cosmocentro Local 103, Cali, Colombia; Transversal 71D No. 26–94 Sur Local 3504, Bogota, Colombia; Calle 19 No. 5–48 Local 226, Pereira, Colombia; Carrera 28 No. 29–06 Local 104, Palmira, Colombia; Calle 10 No. 4–40 of. 312, Cali, Colombia; Carrera 52 No. 72–65 Local 106, Barranquilla, Colombia; Carrera 22 No. 18–65 Local 28, Manizales, Colombia; NIT # 805013989–5 (Colombia) [SDNT]

INTERNACIONAL DE DIVISAS S.A., LLC, 280 Crandon Blvd., Suite 32–185, Miami, FL 33149–1540; Business Registration Document # L00000003506 (United States); US FEIN 65–0996161 (United States) [SDNT]

INTERNACIONAL DE PROYECTOS INMOBILIARIA IPI S.A. (a.k.a. IPI S.A.), Avenida Pedro Vicente Maldonado 744, Edificio Centro Comercial El Recreo, Local 24I, Pichincha, Quito, Ecuador; RUC # 1791843436001 (Ecuador) [SDNT]

INTERNATIONAL COBALT CO. INC., Fort Saskatchewan, AB, Canada [CUBA]

INTERNATIONAL FREEZE DRIED S.A. (a.k.a. IFD S.A.), Carrera 92 No. 62–30, Bogota, Colombia; NIT # 830132968–1 (Colombia) [SDNT]

INTERNATIONAL ISLAMIC RELIEF ORGANIZATION INDONESIA BRANCH OFFICE (a.k.a. AL IGATHA AL-ISLAMIYA; a.k.a. EGASSA; a.k.a. HAYAT AL-AGHATHA AL-ISLAMIA AL-ALAMIYA; a.k.a. HAYAT AL-'IGATHA; a.k.a. HAYAT AL-IGATHA; a.k.a. IGASA; a.k.a. IGASE; a.k.a. IGASSA; a.k.a. IGATHA; a.k.a. IGHATHA; a.k.a. IIRO; a.k.a. INTERNATIONAL ISLAMIC AID ORGANIZATION; a.k.a. INTERNATIONAL ISLAMIC RELIEF AGENCY; a.k.a. INTERNATIONAL RELIEF ORGANIZATION; a.k.a. ISLAMIC RELIEF ORGANIZATION; a.k.a. ISLAMIC SALVATION COMMITTEE; a.k.a. ISLAMIC WORLD RELIEF; a.k.a. THE HUMAN RELIEF COMMITTEE OF THE MUSLIM WORLD LEAGUE; a.k.a. WORLD ISLAMIC RELIEF ORGANIZATION), P.O. Box 3654, Jakarta, Java 54021, Indonesia; Jalan Raya Cipinang Jaya No. 90, East Jakarta, Java 13410, Indonesia [SDGT]

INTERNATIONAL ISLAMIC RELIEF ORGANIZATION PHILIPPINES BRANCH OFFICE (a.k.a. AL IGATHA AL-ISLAMIYA; a.k.a. EGASSA; a.k.a. HAYAT AL-AGHATHA AL-ISLAMIA AL-ALAMIYA; a.k.a. HAYAT AL-'IGATHA; a.k.a. HAYAT AL-IGATHA; a.k.a. IGASA; a.k.a. IGASE; a.k.a. IGASSA; a.k.a. IGATHA; a.k.a. IGHATHA; a.k.a. IIRO; a.k.a. INTERNATIONAL ISLAMIC AID ORGANIZATION; a.k.a. INTERNATIONAL ISLAMIC RELIEF AGENCY; a.k.a. INTERNATIONAL RELIEF ORGANIZATION; a.k.a. ISLAMIC RELIEF ORGANIZATION; a.k.a. ISLAMIC SALVATION COMMITTEE; a.k.a. ISLAMIC WORLD RELIEF; a.k.a. THE HUMAN RELIEF COMMITTEE OF THE MUSLIM WORLD LEAGUE; a.k.a. WORLD ISLAMIC RELIEF ORGANIZATION), Basilan, Philippines; Cotabato City, Philippines; Tawi Tawi, Philippines; Marawi City, Philippines; 201 Heart Tower Building, 108 Valero Street, Salcedo Village, Makati City, Metropolitan Manila, Philippines; Zamboanga City, Philippines [SDGT]

INTERNATIONAL PACIFIC TRADING, INC., 2858 NW 79 Avenue, Miami, FL 33122; Business Registration Document # V16155 (United States); US FEIN 65–0315268 [BPI-SDNTK]

INTERNATIONAL PETROLEUM, S.A. (a.k.a. IPESCO), Colon Free Zone, Panama [CUBA]

INTERNATIONAL SIKH YOUTH FEDERATION (ISYF) [SDGT]

INTERNATIONAL TRANSPORT CORPORATION, Colon Free Zone, Panama [CUBA]

INTERPAL (a.k.a. AL-SANDUQ AL-FILISTINI LIL-IGHATHA; a.k.a. AL-SANDUQ AL-FILISTINI LIL-IGHATHA WA AL-TANMIYA; a.k.a. PALESTINE AND LEBANON RELIEF FUND; a.k.a. PALESTINE DEVELOPMENT AND RELIEF FUND; a.k.a. PALESTINE RELIEF AND DEVELOPMENT FUND; a.k.a. PALESTINE RELIEF FUND; a.k.a. PALESTINIAN AID AND SUPPORT FUND; a.k.a. PALESTINIAN RELIEF AND DEVELOPMENT FUND; a.k.a. PALESTINIAN RELIEF FUND; a.k.a. PRDF; a.k.a. RELIEF AND DEVELOPMENT FUND FOR PALESTINE; a.k.a. WELFARE AND DEVELOPMENT FUND FOR PALESTINE; a.k.a. WELFARE AND DEVELOPMENT FUND OF PALESTINE), P.O. Box 3333, London NW6 1RW, United Kingdom; Registered Charity No. 1040094 [SDGT]

INTERVENTORIA, CONSULTORIA Y ESTUDIOS LIMITADA INGENIEROS ARQUITECTOS (a.k.a. INCOES), Avenida 6N No. 13N–50 of. 1209, Cali, Colombia; NIT # 800144790–0 (Colombia) [SDNT]
INVERSIETE S.A., Carrera 3 No. 11–32 of. 939, Cali, Colombia; NIT # 800234909–6 (Colombia) [SDNT]
INVERSIONES AGRICOLAS AVICOLAS Y GANADERAS LA CARMELITA LTDA., Carrera 61 Nos. 11–58 y 11–62, Cali, Colombia; NIT # 800052898–1 (Colombia) [SDNT]
INVERSIONES AGROINDUSTRIALES DEL OCCIDENTE LTDA. (a.k.a. INAGROCCIDENTE LTDA.; f.k.a. RENTERIA CAICEDO E HIJAS Y CIA S.C.S.), Calle 114A No. 11A–40, Apt. 302, Bogota, Colombia; NIT # 800107993–1 (Colombia) [SDNT]
INVERSIONES AGROPECUARIA ARIZONA LTDA., Calle 82 No. 43–21 Ofc. 1C, Barranquilla, Colombia; NIT # 802019694–4 (Colombia) [SDNT]
INVERSIONES AGUILA LTDA., Factoria La Rivera, La Union, Valle, Colombia; Carrera 14 No. 14–56, La Union, Valle, Colombia; NIT # 891903843–0 (Colombia) [SDNT]
INVERSIONES ARA LTDA., Avenida 4N 6N–67 of. 601, Cali, Colombia; Club El Remanso, Jamundi, Colombia; Avenida 6AN 23DN–16 of. 402, Cali, Colombia; Avenida 6AN 18–69 1–128, Cali, Colombia [SDNT]
INVERSIONES ARIO LTDA., Carrera 4 No. 12–41 of. 608 y 701, Cali, Colombia; NIT # 890328888–1 (Colombia) [SDNT]
INVERSIONES BOMBAY S.A. (a.k.a. AGROVETERINARIA EL TORO; a.k.a. AGROVETERINARIA EL TORO #2), Transversal 29 No. 39–92, Bogota, Colombia; Calle 7 No. 25–69, Cali, Colombia; Calle 12B No. 28–50, Bogota, Colombia; Avenida 3 Bis Norte No. 23CN–69, Cali, Colombia; NIT # 830019226–2 (Colombia) [SDNT]
INVERSIONES BRASILAR S.A. (f.k.a. INVERSIONES RIVERA CAICEDO Y CIA S.C.S.; f.k.a. ''INRICA''), Carrera 11 No. 73–44, Ofc. 803, Bogota, Colombia; NIT # 891305286–2 (Colombia) [SDNT]
INVERSIONES CAPITAL LTDA., Calle 22 Norte No. 9–43, Cali, Colombia; NIT # 800106082–2 (Colombia) [SDNT]
INVERSIONES CARFENI, S.L., Calle Gran Via 80, 28013 Madrid, Spain [SDNT]
INVERSIONES CLAUPI S.L., Calle Consuegra 3, 28036 Madrid, Madrid, Spain; C.I.F. B81684421 (Spain) [SDNT]
INVERSIONES CORPORATIVAS LTDA., Calle 16 Norte No. 9N–41, Cali, Colombia; NIT # 800203027–2 (Colombia) [SDNT]
INVERSIONES CULZAT GUEVARA Y CIA. S.C.S., Avenida 4A Oeste No. 5–187 apt. 401, Cali, Colombia; Avenida 7N No. 23N–39, Cali, Colombia; Avenida 4A Oeste No. 5–107 apt. 401, Cali, Colombia; NIT # 860065523–1 (Colombia) [SDNT]
INVERSIONES DEL PRADO ABDALA SAIEH Y CIA. S.C.A., Calle 77 B No. 57—141, Ofc. 901, Barranquilla, Colombia; NIT # 890108452–0 (Colombia) [SDNT]
INVERSIONES DOBLE CERO E.U., Transversal 29 No. 39–92, Bogota, Colombia; NIT # 830021696–7 (Colombia) [SDNT]
INVERSIONES EL EDEN S.C.S., Calle 52 No. 28E–30, Cali, Colombia; Calle 5 No. 22–39 of. 205, Cali, Colombia; NIT # 800083195–5 (Colombia) [SDNT]
INVERSIONES EL GRAN CRISOL LTDA. (f.k.a. W. HERRERA Y CIA. S. EN C.), Carrera 24D Oeste No. 6–237, Cali, Colombia; Avenida 2N 7N–55 of. 501, Cali, Colombia; NIT # 800001330–2 (Colombia) [SDNT]
INVERSIONES EL MOMENTO S.A., Carrera 49A No.48S–60 Bod. 102, Medellin, Colombia; Carrera 49 No. 61Sur-540, Medellin, Colombia; NIT # 811030776–7 (Colombia) [SDNT]
INVERSIONES EL PENON S.A., Avenida 2N, Cali, Colombia [SDNT]
INVERSIONES EPOCA S.A., Calle 15 Norte No. 6N–34 ofc. 404, Cali, Colombia; NIT # 805012582–7 (Colombia) [SDNT]
INVERSIONES ESPANOLAS FEMCAR S.L., Ronda Manuel Granero 69, piso 4–1, 28043 Madrid, Madrid, Spain; C.I.F. B82290727 (Spain) [SDNT]
INVERSIONES GEELE LTDA., Calle 17A No. 28A–23, Bogota, Colombia [SDNT]
INVERSIONES GRAME LTDA., Factoria La Rivera, La Union, Valle, Colombia; NIT # 891903520–7 (Colombia) [SDNT]
INVERSIONES HERREBE LTDA., Avenida 2N No. 7N–55 of. 501, Cali, Colombia; Carrera 25 No. 4–65, Cali, Colombia [SDNT]
INVERSIONES HOTELERAS DEL LITORAL LTDA. (a.k.a. INHOTEL), Calle 74 No. 53–30, Barranquilla, Colombia; NIT # 800011604–8 (Colombia) [SDNT]
INVERSIONES INMOBILIARIA QUILICHAO S.A. Y CIA S.C.A. (f.k.a. RENGIFO OSPINA Y CIA S.C.S.), Avenida 4N No. 6N–61, Ofc. 510, Cali, Colombia; NIT # 8001329098 (Colombia) [SDNT]
INVERSIONES INMOBILIARIAS VALERIA S.L., Calle Consuegra 3, 28036 Madrid, Madrid, Spain; Calle Zurbano 76, 7, Madrid, Madrid, Spain; C.I.F. B81681454 (Spain) [SDNT]
INVERSIONES INTEGRAL LTDA., Apartado Aereo 10077, Cali, Colombia; Carrera 4 No. 12–41 of. 1403, 1501 Edificio Seguros Bolivar, Cali, Colombia; NIT # 800092770–9 (Colombia) [SDNT]
INVERSIONES INTEGRAL Y CIA., Calle 16B No. 114–80 Casa 2, Cali, Colombia; Carrera 2 Oeste 5–46 apt/of 503, Cali, Colombia [SDNT]
INVERSIONES JAER LTDA., Apartado Aereo 10454, Cali, Colombia; Carrera 1H No. 39–42, Cali, Colombia; Carrera 7 No. 34–341 Bodega 7, Cali, Colombia; Calle 6A Norte No. 2N–36 of. 436, Cali, Colombia; NIT # 890332242–1 (Colombia) [SDNT]
INVERSIONES KANTON LTDA., Avenida 10A No. 5E–26 La Rivera, Cucuta, Norte de Santander, Colombia; NIT # 807000572–9 (Colombia) [SDNT]
INVERSIONES LA QUINTA Y CIA. LTDA., Diagonal 27 No. 27–104, Cali, Colombia; Diagonal 29 No. 36–10 of. 801, Cali, Colombia; NIT # 800160387–2 (Colombia) [SDNT]
INVERSIONES LA SEXTA LTDA., Calle 10 No. 4–47 piso 19, Cali, Colombia [SDNT]
INVERSIONES LICOM LTDA. (a.k.a. RESTAURANTE ANGUS BRANGUS), Carrera 45 No. 54–56, Via las Palmas, Medellin, Colombia; Carrera 42 No. 34–15, Medellin, Colombia; NIT # 811038211–4 (Colombia) [SDNT]
INVERSIONES LOS POSSO LTDA. S.C.S., Factoria La Rivera, La Union, Valle, Colombia; NIT # 891903760–8 (Colombia) [SDNT]
INVERSIONES LUPAMAR, S.A. (a.k.a. LUPAMAR INVESTMENT COMPANY), Panama [CUBA]
INVERSIONES MACARNIC PATINO Y CIA S.C.S., Carrera 8 No. 23–09, Ofc. 903, Pereira, Risaralda, Colombia; Calle 19 No. 9–50, Ofc. 505, Pereira, Risaralda, Colombia; NIT # 816005011–4 (Colombia) [SDNT]
INVERSIONES MONDRAGON Y CIA. S.C.S. (f.k.a. MARIELA DE RODRIGUEZ Y CIA. S. EN C.), Calle 12 Norte No. 9N–56/58, Cali, Colombia; NIT # 890328152–1 (Colombia) [SDNT]
INVERSIONES MPS S.A. (f.k.a. EQUIPOS MPS S.A.), Avenida 13 No. 100–12 Ofc. 302, Bogota, Colombia; NIT # 800231392–5 (Colombia) [SDNT]
INVERSIONES NAMOS Y CIA. LTDA., Carrera 54 No. 75–107, Barranquilla, Colombia; NIT # 800182475–7 (Colombia) [SDNT]
INVERSIONES NUEVO DIA E.U., Calle 86 No. 103C–49, Bogota, Colombia; NIT # 830020410–3 (Colombia) [SDNT]
INVERSIONES PRADO TRADE CENTER LTDA. (a.k.a. IPRACARIBE), Calle 74 No. 53–30, Barranquilla, Colombia; NIT # 800236713–9 (Colombia) [SDNT]
INVERSIONES RODRIGUEZ RAMIREZ Y CIA. S.C.S.S., Calle 10 No. 4–47 piso 19, Cali, Colombia [SDNT]
INVERSIONES SAMPLA E.U., Calle 86 No. 103C–49, Bogota, Colombia; NIT # 830020409–5 (Colombia) [SDNT]
INVERSIONES SAN JOSE LTDA., Calle 44 No. 1E–155, Cali, Colombia; Carrera 7 No. 34–341, Cali, Colombia; Calle 44 No. 1E–135, Cali, Colombia; Apartado Aereo 10454, Cali, Colombia; NIT # 800079682–5 (Colombia) [SDNT]
INVERSIONES SANTA CECILIA S.C.S., Factoria La Rivera, La Union, Valle, Colombia; NIT # 891903795–5 (Colombia) [SDNT]
INVERSIONES SANTA LTDA. (f.k.a. INVERSIONES Y CONSTRUCCIONES SANTA LIMITADA), Calle 5 66B–49 piso 3, Cali, Colombia; Carrera 4 12–41 piso 14, Edificio Seguros Bolivar, Cali, Colombia; Calle 9 No. 46–69 Of. 302, Cali, Colombia; Calle 5 Oeste 3A–26 apt/of 103, 301, 404, 502, 503, Cali, Colombia; Carrera 2 Oeste 5–46 of 502, Cali, Colombia; Calle 7 Oeste 25–48, Cali, Colombia; Carrera 4 12–41 piso 15, Edificio Seguros Bolivar, Cali, Colombia; Calle 13 3–32 piso 14, Cali, Colombia [SDNT]
INVERSIONES SANTA MONICA LTDA., Factoria La Rivera, La Union, Valle, Colombia; NIT # 800042933–9 (Colombia) [SDNT]
INVERSIONES SARDI ALZATE S.C.S., Calle 16 Norte No. 9N–41, Cali, Colombia; NIT # 805009126–0 (Colombia) [SDNT]
INVERSIONES VILLA PAZ S.A., Avenida 2DN No. 24N–76, Cali, Colombia; Carrera 61 No. 11–58, Cali, Colombia; Avenida 2CN No. 24N–92, Cali, Colombia; Calle

70N No. 14–31, Cali, Colombia; NIT # 800091083–2 (Colombia) [SDNT]
INVERSIONES Y COMERCIALIZADORA INCOM LTDA. (f.k.a. CONSTRUCTORA HENA LTDA.), Calle 12 No. 4–63, Cali, Colombia; NIT # 890329658–9 (Colombia) [SDNT]
INVERSIONES Y COMERCIALIZADORA RAMIREZ Y CIA. LTDA., Avenida 4 No. 8N-67, Cali, Colombia; Calle 12N No. 9N–58, Cali, Colombia; NIT # 800075600–3 (Colombia) [SDNT]
INVERSIONES Y CONSTRUCCIONES ABC S.A. (f.k.a. INVERSIONES CAMINO REAL S.A.), Calle 10 No. 4–47 piso 19, Cali, Colombia; Calle 12 Norte No. 9N–56/58, Cali, Colombia; NIT # 890325389–4 (Colombia) [SDNT]
INVERSIONES Y CONSTRUCCIONES VALLE S.A. (a.k.a. INCOVALLE), Avenida 2N No. 7N–55 of. 501, Cali, Colombia [SDNT]
INVERSIONES Y DISTRIBUCIONES A M M LTDA., Calle 5 No. 50–103, Cali, Colombia; NIT # 800192791–2 (Colombia) [SDNT]
INVERSIONES Y REPRESENTACIONES S.A. (a.k.a. IRSA S.A.), Carrera 43A No. 16A Sur—38, Barrio El Poblado, Medellin, Colombia; NIT # 811040270–5 (Colombia) [SDNT]
INVESTACAST PRECISION CASTINGS, LTD., 112 City Road, London, United Kingdom [IRAQ2]
IPARRAGUIRRE GUENECHEA, Maria Soledad; DOB 25 Apr 1961; POB Escoriaza, Guipuzcoa Province, Spain; D.N.I. 16.255.819 (Spain); Member ETA (individual) [SDGT]
IRAGORI TORRES, Maria Consuelo (a.k.a. IRAGORRI TORRES, Maria Consuelo), c/o INTERNACIONAL DE DIVISAS S.A., Cali, Colombia; c/o OBURSATILES S.A., Cali, Colombia; c/o ALERO S.A., Cali, Colombia; c/o VALORCORP S.A., Bogota, Colombia; c/o INTERNACIONAL DE DIVISAS S.A., LLC, Miami, FL; c/o SEPULVEDA-IRAGORRI LTD., Nassau, Bahamas, The; DOB 26 Apr 1964; Cedula No. 31921847 (Colombia); Passport 31921847 (Colombia) (individual) [SDNT]
IRAN ADL; Vessel Registration Identification IMO 8108559 (vessel) [NPWMD]
IRAN AFZAL; Vessel Registration Identification IMO 8105284 (vessel) [NPWMD]
IRAN AIRCRAFT MANUFACTURING INDUSTRIAL COMPANY (a.k.a. HESA; a.k.a. HESA TRADE CENTER; a.k.a. HTC; a.k.a. IAMCO; a.k.a. IAMI; a.k.a. IRAN AIRCRAFT MANUFACTURING COMPANY; a.k.a. IRAN AIRCRAFT MANUFACTURING INDUSTRIES; a.k.a. KARKHANEJATE SANAYE HAVAPAYMAIE IRAN; a.k.a. ''HAVA PEYMA SAZI-E IRAN''; a.k.a. ''HAVAPEYMA SAZHRAN''; a.k.a. ''HAVAPEYMA SAZI IRAN''; a.k.a. ''HEVAPEIMASAZI''), Shahih Shar Industrial Zone, Isfahan, Iran; P.O. Box 81465–935, Esfahan, Iran; P.O. Box 8140, No. 107 Sepahbod Gharany Ave, Tehran, Iran; P.O. Box 83145–311, 28 km Esfahan—Tehran Freeway, Shahin Shahr, Esfahan, Iran; P.O. Box 14155–5568, No. 27 Shahamat Ave, Vallie Asr Sqr, Tehran 15946, Iran [NPWMD]
IRAN AKHAVAN; Vessel Registration Identification IMO 8113009 (vessel) [NPWMD]
IRAN AMANAT; Vessel Registration Identification IMO 8112990 (vessel) [NPWMD]
IRAN AMIRABAD; Vessel Registration Identification IMO 9368003 (vessel) [NPWMD]
IRAN ANZALI; Vessel Registration Identification IMO 9367982 (vessel) [NPWMD]
IRAN ARAK; Vessel Registration Identification IMO 9270646 (vessel) [NPWMD]
IRAN ARDEBIL; Vessel Registration Identification IMO 9284154 (vessel) [NPWMD]
IRAN AZADI; Vessel Registration Identification IMO 7632838 (vessel) [NPWMD]
IRAN AZARBAYJAN; Vessel Registration Identification IMO 9193185 (vessel) [NPWMD]
IRAN BAGHAEI; Vessel Registration Identification IMO 7502734 (vessel) [NPWMD]
IRAN BAGHERI; Vessel Registration Identification IMO 7428811 (vessel) [NPWMD]
IRAN BAM; Vessel Registration Identification IMO 9323833 (vessel) [NPWMD]
IRAN BASEER; Vessel Registration Identification IMO 9010711 (vessel) [NPWMD]
IRAN BASHEER; Vessel Registration Identification IMO 8215742 (vessel) [NPWMD]
IRAN BIRJAND; Vessel Registration Identification IMO 9305219 (vessel) [NPWMD]
IRAN BOJNOORD; Vessel Registration Identification IMO 9305207 (vessel) [NPWMD]
IRAN BRAVE; Vessel Registration Identification IMO 9051650 (vessel) [NPWMD]
IRAN BROOJERDI; Vessel Registration Identification IMO 7502722 (vessel) [NPWMD]
IRAN BUSHEHR; Vessel Registration Identification IMO 9270658 (vessel) [NPWMD]
IRAN COMMUNICATION INDUSTRIES (a.k.a. ICI; a.k.a. IRAN COMMUNICATIONS INDUSTRIES GROUP; a.k.a. SANAYE MOKHABERAT IRAN), P.O. Box 19575–131, 34 Apadana Avenue, Tehran, Iran; Shahid Langary Street, Nobonyad Square Ave., Pasdaran, Tehran, Iran; P.O. Box 19295–4731, Pasdaran Avenue, Tehran, Iran [NPWMD]
IRAN DALEER; Vessel Registration Identification IMO 9118551 (vessel) [NPWMD]
IRAN DEYANAT; Vessel Registration Identification IMO 8107579 (vessel) [NPWMD]
IRAN DOLPHIN; Vessel Registration Identification IMO 8320195 (vessel) [NPWMD]
IRAN ELECTRONICS INDUSTRIES (a.k.a. IEI; a.k.a. SANAYE ELECTRONIC IRAN; a.k.a. SASAD IRAN ELECTRONICS INDUSTRIES; a.k.a. SHERKAT SANAYEH ELECTRONICS IRAN), P.O. Box 19575–365, Shahied Langari Street, Noboniad Sq, Pasdaran Ave, Saltanad Abad, Tehran, Iran; P.O. Box 71365–1174, Hossain Abad/Ardakan Road, Shiraz, Iran; Business Registration Document # 829 [NPWMD]
IRAN ENTEKHAB; Vessel Registration Identification IMO 7632814 (vessel) [NPWMD]
IRAN ESTEGHLAL; Vessel Registration Identification IMO 7620550 (vessel) [NPWMD]
IRAN FARS; Vessel Registration Identification IMO 9283021 (vessel) [NPWMD]
IRAN GHADEER; Vessel Registration Identification IMO 9010723 (vessel) [NPWMD]
IRAN GHAZI; Vessel Registration Identification IMO 8309672 (vessel) [NPWMD]
IRAN GILAN; Vessel Registration Identification IMO 9193202 (vessel) [NPWMD]
IRAN GOLESTAN; Vessel Registration Identification IMO 9226944 (vessel) [NPWMD]
IRAN HAMADAN; Vessel Registration Identification IMO 9226956 (vessel) [NPWMD]
IRAN HAMZEH; Vessel Registration Identification IMO 8320171 (vessel) [NPWMD]
IRAN HORMUZ 12; Vessel Registration Identification IMO 9005596 (vessel) [NPWMD]
IRAN HORMUZ 14; Vessel Registration Identification IMO 9020778 (vessel) [NPWMD]
IRAN HORMUZ 21; Vessel Registration Identification IMO 8314263 (vessel) [NPWMD]
IRAN HORMUZ 22; Vessel Registration Identification IMO 8314275 (vessel) [NPWMD]
IRAN HORMUZ 23; Vessel Registration Identification IMO 8319782 (vessel) [NPWMD]
IRAN HORMUZ 25; Vessel Registration Identification IMO 8422072 (vessel) [NPWMD]
IRAN HORMUZ 26; Vessel Registration Identification IMO 8422084 (vessel) [NPWMD]
IRAN ILAM; Vessel Registration Identification IMO 9283033 (vessel) [NPWMD]
IRAN JOMHURI; Vessel Registration Identification IMO 7632826 (vessel) [NPWMD]
IRAN KABEER; Vessel Registration Identification IMO 9076478 (vessel) [NPWMD]
IRAN KASHAN; Vessel Registration Identification IMO 9270696 (vessel) [NPWMD]
IRAN KERMAN; Vessel Registration Identification IMO 9209350 (vessel) [NPWMD]
IRAN KERMANSHAH; Vessel Registration Identification IMO 9213399 (vessel) [NPWMD]
IRAN KHORASAN; Vessel Registration Identification IMO 9193214 (vessel) [NPWMD]
IRAN KOLAHDOOZ; Vessel Registration Identification IMO 7428809 (vessel) [NPWMD]

IRAN MADANI; Vessel Registration Identification IMO 8309622 (vessel) [NPWMD]
IRAN MAHALLATI; Vessel Registration Identification IMO 7428823 (vessel) [NPWMD]
IRAN MATIN; Vessel Registration Identification IMO 9051624 (vessel) [NPWMD]
IRAN MAZANDARAN; Vessel Registration Identification IMO 9193197 (vessel) [NPWMD]
IRAN MODARES; Vessel Registration Identification IMO 7618985 (vessel) [NPWMD]
IRAN NABUVAT; Vessel Registration Identification IMO 7618571 (vessel) [NPWMD]
IRAN NAVAB (a.k.a. IRAN DESTINY); Vessel Registration Identification IMO 8320145 (vessel) [NPWMD]
IRAN NOWSHAHR; Vessel Registration Identification IMO 9367994 (vessel) [NPWMD]
IRAN O HIND SHIPPING COMPANY (a.k.a. IHSC; a.k.a. IRANO HIND SHIPPING COMPANY; a.k.a. IRANOHIND SHIPPING COMPANY (PJS); a.k.a. KESHTIRANI IRAN VE HEND SAHAMI KHASS), 18 Mehrshad Street, Sadaghat Street, Opposite of Park Mellat, Vali-e-Asr Ave., Tehran, Iran; 265, Next to Mehrshad, Sedaghat St., Opposite of Mellat Park, Vali Asr Ave., Tehran 1A001, Iran [NPWMD]
IRAN O MISR SHIPPING COMPANY (a.k.a. IRAN & EGYPT SHIPPING LINES; a.k.a. IRANMISR SHIPPING CO.), No. 41, 3rd Floor, Corner of 6th Alley, Sanaei St., Karim Khan Zand Ave., Tehran, Iran; 6 El Horreya Avenue, Alexandria, Egypt; El Nahda Building, Elnahda St., 4th Floor, Port Said, Egypt [NPWMD]
IRAN PIROOZI; Vessel Registration Identification IMO 9283007 (vessel) [NPWMD]
IRAN SARBAZ; Vessel Registration Identification IMO 8113011 (vessel) [NPWMD]
IRAN SEPAH; Vessel Registration Identification IMO 7375363 (vessel) [NPWMD]
IRAN SHAHED; Vessel Registration Identification IMO 9184691 (vessel) [NPWMD]
IRAN SHALAMCHEH; Vessel Registration Identification IMO 8820925 (vessel) [NPWMD]
IRAN SHARIAT; Vessel Registration Identification IMO 8107581 (vessel) [NPWMD]
IRAN TABAS; Vessel Registration Identification IMO 9305192 (vessel) [NPWMD]
IRAN TAKHTI; Vessel Registration Identification IMO 7602194 (vessel) [NPWMD]
IRAN TEYFOURI; Vessel Registration Identification IMO 7602211 (vessel) [NPWMD]
IRAN TORKAMAN; Vessel Registration Identification IMO 9368015 (vessel) [NPWMD]
IRAN TUCHAL; Vessel Registration Identification IMO 9346536 (vessel) [NPWMD]
IRAN YASOOJ; Vessel Registration Identification IMO 9284142 (vessel) [NPWMD]
IRAN YAZD; Vessel Registration Identification IMO 9213387 (vessel) [NPWMD]
IRAN ZANJAN; Vessel Registration Identification IMO 9283019 (vessel) [NPWMD]
IRAQI ALLIED SERVICES LIMITED, United Kingdom [IRAQ2]
IRAQI FREIGHT SERVICES LIMITED, United Kingdom [IRAQ2]
IRAQI TRADE CENTER, Dubai, United Arab Emirates [IRAQ2]
IRBIS AIR COMPANY, UL Furmanova 65, office 317, Almaty 48004, Kazakhstan [LIBERIA]
IRINVESTSHIP LTD., Global House, 61 Petty France, London SW1H 9EU, United Kingdom; Business Registration Document # 4110179 (United Kingdom) [NPWMD]
IRISL (MALTA) LIMITED, Flat 1, 181, Tower Road, Sliema SLM 1604, Malta; Business Registration Document # C33735 (Malta); Tax ID No. MT 17037313 (Malta) [NPWMD]
IRISL (UK) LTD., 2 Abbey Rd., Barking, Essex IG11 7 AX, United Kingdom; Business Registration Document # 4765305 (United Kingdom) [NPWMD]
IRISL BENELUX NV, Noorderlaan 139, B–2030, Antwerp, Belgium; V.A.T. Number BE480224531 (Belgium) [NPWMD]
IRISL CHINA SHIPPING CO., LTD. (a.k.a. YI HANG SHIPPING COMPANY, LTD.), F23A-D, Times Plaza No. 1, Taizi Road, Shekou, Shenzhen 518067, China [NPWMD]
IRISL EUROPE GMBH, Schottweg 5, 22087, Hamburg, Germany; V.A.T. Number DE217283818 (Germany) [NPWMD]
IRISL MARINE SERVICES & ENGINEERING COMPANY (a.k.a. IMSENGCO; a.k.a. SHERKATE KHADAMTE DARYA AND MOHAMDESI KESHTIRANI), Sarbandar, Gas Station, P.O. Box 199, Bandar Imam Khomeini, Iran; No. 221, Northern Iranshahr St., Karimkhan Ave., Tehran, Iran; Karim Khan Zand Ave., Iran Shahr Shomai, No. 221, Tehran, Iran [NPWMD]
IRISL MULTIMODAL TRANSPORT CO. (a.k.a. RAIL IRAN SHIPPING COMPANY), No. 25, Shahid Arabi Line, Sanaei St., Karimkhan Zand St., Tehran, Iran [NPWMD]
IRITAL SHIPPING SRL COMPANY, Ponte Francesco Morosini 59, 16126 Genova (GE), Italy; Commercial Registry Number GE 426505 (Italy); Italian Fiscal Code 03329300101 (Italy); V.A.T. Number 12869140157 (Italy) [NPWMD]
ISAMUDDIN, Nurjaman Riduan (a.k.a. HAMBALI; a.k.a. ISOMUDDIN, Riduan; a.k.a. NURJAMAN; a.k.a. NURJAMAN, Encep); DOB 04 Apr 1964; alt. DOB 01 Apr 1964; POB Cianjur, West Java, Indonesia; nationality Indonesia (individual) [SDGT]
ISAZA ARANGO, Ramon Maria; DOB 30 Sep 1940; POB Sonson, Antioquia, Colombia; Cedula No. 5812993 (Colombia) (individual) [SDNTK]
ISLAMBOULI, Mohammad Shawqi; DOB 15 Jan 1955; POB Egypt; Passport 304555 (Egypt); Military Leader of ISLAMIC GAMA'AT (individual) [SDT]
ISLAMIC AFRICAN RELIEF AGENCY (a.k.a. AL-WAKALA AL-ISLAMIYA AL-AFRIKIA L'IL-IGHATHA; a.k.a. AL-WAKALA AL-ISLAMIYA L'IL-IGHATHA; a.k.a. IARA; a.k.a. ISLAMIC AMERICAN RELIEF AGENCY; a.k.a. ISLAMIC RELIEF AGENCY; a.k.a. ISRA), 201 E. Cherry Street, Suite D, Columbia, MO 65205; all offices worldwide [SDGT]
ISLAMIC ARMY (a.k.a. AL QAEDA; a.k.a. AL QA'IDA; a.k.a. AL QAIDA; a.k.a. AL-JIHAD; a.k.a. EGYPTIAN AL-JIHAD; a.k.a. EGYPTIAN ISLAMIC JIHAD; a.k.a. INTERNATIONAL FRONT FOR FIGHTING JEWS AND CRUSADES; a.k.a. ISLAMIC ARMY FOR THE LIBERATION OF HOLY SITES; a.k.a. ISLAMIC SALVATION FOUNDATION; a.k.a. NEW JIHAD; a.k.a. ''THE BASE''; a.k.a. THE GROUP FOR THE PRESERVATION OF THE HOLY SITES; a.k.a. THE ISLAMIC ARMY FOR THE LIBERATION OF THE HOLY PLACES; a.k.a. THE JIHAD GROUP; a.k.a. THE WORLD ISLAMIC FRONT FOR JIHAD AGAINST JEWS AND CRUSADERS; a.k.a. USAMA BIN LADEN NETWORK; a.k.a. USAMA BIN LADEN ORGANIZATION) [FTO] [SDGT] [SDT]
ISLAMIC ARMY OF ADEN [SDGT]
ISLAMIC JIHAD GROUP (IJG) (a.k.a. AL-DJIHAD AL-ISLAMI; a.k.a. DZHAMAAT MODZHAKHEDOV; a.k.a. ISLAMIC JIHAD GROUP OF UZBEKISTAN; n.k.a. ISLAMIC JIHAD UNION (IJU); n.k.a. ISLOMIY JIHOD ITTIHODI; n.k.a. ITTIHAD AL-JIHAD AL-ISLAMI; a.k.a. JAMA'AT AL-JIHAD; a.k.a. JAMIAT AL-JIHAD AL-ISLAMI; a.k.a. JAMIYAT; a.k.a. THE JAMAAT MOJAHEDIN; a.k.a. THE KAZAKH JAMA'AT; a.k.a. THE LIBYAN SOCIETY) [SDGT] [FTO]
ISLAMIC MOVEMENT OF UZBEKISTAN (a.k.a. IMU) [FTO] [SDGT]
ISLAMIC REPUBLIC OF IRAN SHIPPING LINES (a.k.a. ARYA SHIPPING COMPANY; a.k.a. IRI SHIPPING LINES; a.k.a. IRISL; a.k.a. IRISL GROUP), No. 37, Aseman Tower, Sayyade Shirazee Square, Pasdaran Ave., P.O. Box 19395–1311, Tehran, Iran; No. 37, Corner of 7th Narenjestan, Sayad Shirazi Square, After Noboyand Square, Pasdaran Ave., Tehran, Iran [NPWMD]
ISLAMIC RESISTANCE SUPPORT ORGANIZATION (a.k.a. HAYAT AL-DAM LIL-MUQAWAMA AL-ISLAMIYA; a.k.a. ISLAMIC RESISTANCE SUPPORT ASSOCIATION), Beirut, Lebanon [SDGT]
ISLAMIC REVOLUTIONARY GUARD CORPS (a.k.a. AGIR; a.k.a. IRANIAN REVOLUTIONARY GUARD CORPS; a.k.a. IRG; a.k.a. IRGC; a.k.a. ISLAMIC REVOLUTIONARY CORPS; a.k.a. PASDARAN; a.k.a. PASDARAN-E ENGHELAB-E ISLAMI; a.k.a. PASDARAN-E INQILAB; a.k.a. REVOLUTIONARY GUARD; a.k.a. REVOLUTIONARY GUARDS; a.k.a. SEPAH; a.k.a. SEPAH PASDARAN; a.k.a. SEPAH-E PASDARAN-E ENQELAB-E ESLAMI; a.k.a. THE ARMY OF THE GUARDIANS OF THE ISLAMIC REVOLUTION; a.k.a. THE IRANIAN REVOLUTIONARY GUARDS), Tehran, Iran [NPWMD]
ISLAMIC REVOLUTIONARY GUARD CORPS (IRGC)-QODS FORCE (a.k.a. PASDARAN-E

ENGHELAB-E ISLAMI (PASDARAN); a.k.a. SEPAH-E QODS (JERUSALEM FORCE)) [SDGT]

ISSA, Issa Osman (a.k.a. ATTO, Abdullah; a.k.a. BUR, Abdullah; a.k.a. SUDANI, Abdala; a.k.a. ''AFADEY''; a.k.a. ''MUSSE''); DOB 1973; POB Malindi, Kenya; nationality Kenya (individual) [SDGT]

IVANOVIC, Milan; DOB 5 Feb 1955 (individual) [BALKANS]

IZQUIERDO QUINTERO, Rosalino, c/o INVERSIONES INVERVALLE S.A., Cali, Colombia; DOB 4 Oct 1956; Cedula No. 70111037 (Colombia) (individual) [SDNT]

IZTUETA BARANDICA, Enrique; DOB 30 Jul 1955; POB Santurce (Vizcaya Province), Spain; D.N.I. 14.929.950; member ETA (individual) [SDGT]

IZZ-AL-DIN, Hasan (a.k.a. GARBAYA, AHMED; a.k.a. SA-ID; a.k.a. SALWWAN, Samir), Lebanon; DOB 1963; POB Lebanon; citizen Lebanon (individual) [SDGT]

IZZAT, Dieman Abdulkadir (a.k.a. AL-JABBARI, Deiman Alhasenben Ali), Fuerther Street 335, Nuremberg, Germany; Nuremberg Prison, Germany; Adolf-Braun Street 6, Nuremberg 90429, Germany; DOB 4 Jul 1965; POB Kirkuk, Iraq; nationality Iraq; Travel Document Number A0141062 (Germany) (individual) [SDGT]

J. FREDDY MAFLA Y CIA. S.C.S., Carrera 4 No. 11–45 Ofc. 503, Cali, Colombia; NIT # 800020482–4 (Colombia) [SDNT]

J.A.J. BARBOSA Y CIA. S.C.S. (f.k.a. COMERCIO GLOBAL Y CIA. S.C.S.), Calle 15 Norte No. 6N–34 ofc. 404, Cali, Colombia; NIT # 800214437–6 (Colombia) [SDNT]

JAAR JACIR, Armando Jacobo (a.k.a. JAAR JASSIR, Armando Jacobo), c/o JACARIA FLORIDA, INC., Miami, FL; Calle 72 No. 65–56, Barranquilla, Colombia; c/o ALMACAES S.A., Bogota, Colombia; c/o BLACKMORE INVESTMENTS A.V.V., Oranjestad, Aruba; c/o ARMANDO JAAR Y CIA. S.C.S., Barranquilla, Colombia; c/o ILOVIN S.A., Bogota, Colombia; Calle 81 No. 57–56, Barranquilla, Colombia; c/o CORPORACION DE ALMACENES POR DEPARTAMENTOS S.A., Bogota, Colombia; c/o G.L.G. S.A., Bogota, Colombia; Calle 118 No. 19–38, Bogota, Colombia; c/o RAMAL S.A., Bogota, Colombia; DOB 20 Jan 1947; POB Barranquilla, Colombia; Cedula No. 7432263 (Colombia); Passport P015313 (Colombia) (individual) [SDNT]

JAAR JASSIR, Ricardo (a.k.a. JAAR JACIR, Ricardo), c/o CONFECCIONES LORD S.A., Barranquilla, Atlantico, Colombia; c/o ALMACAES S.A., Bogota, Colombia; c/o CORPORACION DE ALMACENES POR DEPARTAMENTOS S.A., Bogota, Colombia; c/o G.L.G. S.A., Bogota, Colombia; c/o ILOVIN S.A., Bogota, Colombia; c/o RAMAL S.A., Bogota, Colombia; c/o JACARIA FLORIDA, INC., Miami, FL; c/o GIMBER INVESTING CORPORATION, Virgin Islands, British; DOB 29 Sep 1940; POB Barranquilla, Colombia; citizen Colombia; Cedula No. 3714973 (Colombia); Passport AF665413 (Colombia) (individual) [SDNT]

JABBER IBN HAYAN (a.k.a. JABER IBN HAYAN RESEARCH DEPARTMENT; a.k.a. JABR IBN HAYAN MULTIPURPOSE LABORATORIES; a.k.a. ''JABIR BIN AL-HAYYAN LABORATORY''; a.k.a. ''JHL''), c/o AEOI-JIHRD P.O. Box 11365–8486, Tehran, Iran [NPWMD]

JABRIL, Ahmad (a.k.a. JIBRIL, Ahmad); DOB 1938; POB Ramleh, Israel; Secretary General of POPULAR FRONT FOR THE LIBERATION OF PALESTINE—GENERAL COMMAND (individual) [SDT]

JACARIA FLORIDA, INC., 1149 SW 27th Avenue Suite 203, Miami, FL 33135; 9400 South Dadeland Boulevard Suite 601, Miami, FL 33156; US FEIN 592804133 (United States) [SDNT]

JAFFAR 'ALI, 'Abd al-Rahman Muhammad (a.k.a. JAFFAR, Abdulrahman Mohammad; a.k.a. JAFFER ALI, Abdul Rahman Mohamed; a.k.a. JAFFIR ALI, Abd al-Rahman; a.k.a. JAFFIR, 'Abd al-Rahman Muhammad; a.k.a. JAFIR 'ALI, 'Abd al-Rahman Muhammad; a.k.a. ''ABU MUHAMMAD AL-KHAL''; a.k.a. "'ALI AL-KHAL''); DOB 15 Jan 1968; POB Muharraq, Bahrain; nationality Bahrain (individual) [SDGT]

JAIMES RIVERA, Jose Isidro, c/o CONSULTORIA EMPRESARIAL ESPECIALIZADA LTDA., Cali, Colombia; c/o INVERSIONES GEMINIS S.A., Cali, Colombia; c/o INMOBILIARIA U.M.V. S.A., Cali, Colombia; c/o CONCRETOS CALI S.A., Cali, Colombia; c/o INVERSIONES BETANIA LTDA., Cali, Colombia; c/o CONSTRUCTORA DIMISA LTDA., Cali, Colombia; c/o GANADERIAS DEL VALLE S.A., Cali, Colombia; c/o ADMINISTRACION INMOBILIARIA BOLIVAR S.A., Cali, Colombia; c/o SOCOVALLE LTDA., Cali, Colombia; c/o INDUSTRIA DE CARNES LTDA., Pereira, Colombia; c/o COMERCIALIZADORA INTERNACIONAL VALLE DE ORO S.A., Cali, Colombia; c/o INVERSIONES EL PENON S.A., Cali, Colombia; DOB 7 Nov 1949; Cedula No. 10090006 (Colombia) (individual) [SDNT]

JAISH-I-MOHAMMED (a.k.a. ARMY OF MOHAMMED; a.k.a. JAISH-E-MOHAMMED; a.k.a. KHUDAMUL ISLAM; a.k.a. KHUDDAM-UL-ISLAM; a.k.a. KUDDAM E ISLAMI; a.k.a. MOHAMMED'S ARMY; a.k.a. TEHRIK UL-FURQAAN), Pakistan [FTO] [SDGT]

JAKSIC, Marko; DOB 1954; POB Mitrovica, Serbia and Montenegro (individual) [BALKANS]

JAKUPI, Avdyl; DOB 20 Apr 1974; POB Stimlje, Kosovo, Serbia (individual) [BALKANS]

JALOLOV, Najmiddin Kamolitdinovich (a.k.a. ABU YAHYA MUHAMMAD FATIH; a.k.a. JALALOV, Najmiddin; a.k.a. JALOLOV, Najmiddin; a.k.a. YAKH'YO; a.k.a. ZHALALOV, Nazhmiddin; a.k.a. ZHALOLOV, Nazhmiddin; a.k.a. ZHALOLOV, Nazhmiddin Kamoldinovich; a.k.a. ZHALOLOV, Nazhmidin Kamoldinovich; a.k.a. ZHALOLOV, Nazhmuddin Kamoldinovich; a.k.a. ZHANOV, Najmiddin Kamilidinovich; a.k.a. ''ABDURAKHMON''; a.k.a. ''YAHYO''), S. Jalilov Street 14, Khartu, Andijan region, Uzbekistan; DOB 1 Apr 1972; alt. DOB 1972; POB Andijan region, Uzbekistan; nationality Uzbekistan (individual) [SDGT]

JAMARO CONSTRUCTORES S.A. DE C.V., Culiacan, Sinaloa, Mexico [SDNTK]

JAM'AT AL TAWHID WA'AL-JIHAD (a.k.a. AL-QAIDA GROUP OF JIHAD IN IRAQ; a.k.a. AL-QAIDA GROUP OF JIHAD IN THE LAND OF THE TWO RIVERS; a.k.a. AL-QAIDA IN IRAQ; a.k.a. AL-QAIDA IN MESOPOTAMIA; a.k.a. AL-QAIDA IN THE LAND OF THE TWO RIVERS; a.k.a. AL-QAIDA OF JIHAD IN IRAQ; a.k.a. AL-QAIDA OF JIHAD ORGANIZATION IN THE LAND OF THE TWO RIVERS; a.k.a. AL-QAIDA OF THE JIHAD IN THE LAND OF THE TWO RIVERS; a.k.a. AL-TAWHID; a.k.a. AL-ZARQAWI NETWORK; a.k.a. TANZEEM QA'IDAT AL JIHAD/BILAD AL RAAFIDAINI; a.k.a. TANZIM QA'IDAT AL-JIHAD FI BILAD AL-RAFIDAYN; a.k.a. THE MONOTHEISM AND JIHAD GROUP; a.k.a. THE ORGANIZATION BASE OF JIHAD/COUNTRY OF THE TWO RIVERS; a.k.a. THE ORGANIZATION BASE OF JIHAD/MESOPOTAMIA; a.k.a. THE ORGANIZATION OF AL-JIHAD'S BASE IN IRAQ; a.k.a. THE ORGANIZATION OF AL-JIHAD'S BASE IN THE LAND OF THE TWO RIVERS; a.k.a. THE ORGANIZATION OF AL-JIHAD'S BASE OF OPERATIONS IN IRAQ; a.k.a. THE ORGANIZATION OF AL-JIHAD'S BASE OF OPERATIONS IN THE LAND OF THE TWO RIVERS; a.k.a. THE ORGANIZATION OF JIHAD'S BASE IN THE COUNTRY OF THE TWO RIVERS) [FTO] [SDGT]

JAMCE INVESTMENTS LTD., Georgetown, Grand Cayman, Cayman Islands; C.R. No. 93989 (Cayman Islands) [SDNT]

JAMI JAMI (a.k.a. JAMA' JAMA'; a.k.a. JAMEA, Jamea Kamil; a.k.a. JAM'I JAM'I); DOB 16 Jun 1954; POB Jablah, Zama, Syria; Brigadier General (individual) [SYRIA]

JAMIL GEORGES, Fahd (a.k.a. JAMIL GEORGES, Fuad; a.k.a. YAMIL GEORGES, Fahd; a.k.a. ''EL PADRINO''; a.k.a. ''TURCO''), Pedro Juan Caballero, Amambay, Paraguay; Ponta Pora, Mato Grosso do Sul, Brazil; DOB 7 Jun 1941; citizen Brazil; nationality Lebanon; Cedula No. RG–013147 (Brazil) (individual) [SDNTK]

JAMMALI, Imed Ben Bechir Ben Hamda, via Dubini, n. 3, Gallarate, Varese, Italy; DOB 25 Jan 1968; POB Menzel Temine, Tunisia; nationality Tunisia; Italian Fiscal Code JMMMDI68A25Z352D; Passport K693812 issued 23 Apr 1999 expires 22 Apr 2004; Currently in jail in Tunisia (individual) [SDGT]

JAM'YAH TA'AWUN AL-ISLAMIA (a.k.a. JAM'IYAT AL TA'AWUN AL ISLAMIYYA; a.k.a. JIT; a.k.a. SOCIETY OF ISLAMIC COOPERATION), Qandahar City, Afghanistan [SDGT]

JANJALANI, Khadafi Abubakar (a.k.a. ABU MUKTAR; a.k.a. JANJALANI, Khadafy; a.k.a. JANJALANI, Khaddafy Abubakar); DOB 3 Mar 1975; POB Isabela, Basilan, Philippines; nationality Philippines (individual) [SDGT]

JANKOVIC, Gojko; DOB 31 Oct 1954; POB Foca, Bosnia-Herzegovina; ICTY indictee at large; sub-commander of the military police in Foca (individual) [BALKANS]

JANPRAPAPORN, Arin (a.k.a. CHANTARAPRAPAPORN, Arin; a.k.a. CHANTHRAPRAPHAPHON, Amarin;

a.k.a. CHANTHRAPRAPHAPHON, Arin; a.k.a. CHANTRAPRAPAPORN, Arrin; a.k.a. CHATARAPRAPAPORN, Arin), c/o BANGKOK ARTI-FLORA DESIGN LIMITED PARTNERSHIP, Bangkok, Thailand; c/o BANGKOK SILK FLOWER COMPANY LTD., Bangkok, Thailand; DOB 5 May 1954; Passport M93116 (Thailand) (individual) [SDNTK]

JARACO S.A. (a.k.a. SOKTAR; a.k.a. TRADACO S.A.), 45 Route de Frontenex, CH–1207 Geneva, Switzerland [IRAQ2]

JARAMILLO ARIAS, Gustavo Alfonso, c/o FARMATEL E.U., Bogota, Colombia; Cedula No. 16601998 (Colombia); Passport 16601998 (Colombia) (individual) [SDNT]

JARAMILLO ARIAS, Juan Guillermo, c/o PROVIDA E.U., Cali, Colombia; DOB 6 Dec 1959; Cedula No. 16634644 (Colombia); Passport 16634644 (Colombia) (individual) [SDNT]

JARAMILLO FRANCO, Harvy, c/o DISMERCOOP, Cali, Colombia; DOB 10 Aug 1965; Cedula No. 16711189 (Colombia) (individual) [SDNT]

JAROMO INVERSIONES S.L., Calle Florencio Castillo 8, portal 7, piso 2–21, 28043 Madrid, Madrid, Spain; C.I.F. B81784548 (Spain) [SDNT]

JARRAYA, Khalil (a.k.a. JARRAYA, Khalil Ben Ahmed Ben Mohamed; a.k.a. ''ABDEL' AZIZ BEN NARVAN''; a.k.a. ''AMR''; a.k.a. ''AMRO''; a.k.a. ''AMROU''; a.k.a. ''BEN NARVAN ABDEL AZIZ''; a.k.a. ''KHALIL YARRAYA''; a.k.a. ''OMAR''), Via Bellaria n.10, Bologna, Italy; Via Lazio n.3, Bologna, Italy; DOB 8 Feb 1969; alt. DOB 15 Aug 1970; POB Sfax, Tunisia; alt. POB Sreka, ex-Yugoslavia; nationality Tunisia; alt. nationality Bosnia and Herzegovina; Passport K989895 (Tunisia) issued 26 Jul 1995 expires 25 Jul 2000 (individual) [SDGT]

JARRAYA, Mounir Ben Habib (a.k.a. JARRAYA, Mounir Ben Habib Ben Al-Taher; a.k.a. ''YARRAYA''), Via Mirasole n.11, Bologna, Italy; Via Ariosto n.8, Casalecchio di Reno (Bologna), Italy; DOB 25 Oct 1963; POB Sfax, Tunisia; nationality Tunisia; Passport L 065947 issued 28 Oct 1995 expires 27 Oct 2000 (individual) [SDGT]

JASIM, Latif Nusayyif (a.k.a. JASSEM, Latif Nassif), Baghdad, Iraq; DOB 1941; Former Minister of Labor and Social Affairs (individual) [IRAQ2]

JEHOVA LTDA., Calle 28 No. 27–18, Tulua, Valle, Colombia; NIT # 800112196–8 (Colombia) [SDNT]

JELASSI, Riadh Ben Belkassem Ben Mohamed; DOB 15 Dec 1970; POB Al-Mohamedia, Tunisia; nationality Tunisia; Passport L276046 issued 1 Jul 1996 expires 30 Jun 2001 (individual) [SDGT]

JELAVIC, Ante; DOB 21 Oct 1963; POB Potprolog, Croatia (individual) [BALKANS]

JELISIC, Goran; DOB 7 Jun 1968; POB Bijeljina, Bosnia-Herzegovina; ICTY indictee (individual) [BALKANS]

JEMAA ISLAMIYAH (JI) (a.k.a. JEMAA ISLAMIYA; a.k.a. JEMA'A ISLAMIYAH; a.k.a. JEMAA ISLAMIYYA; a.k.a. JEMA'A ISLAMIYYA; a.k.a. JEMAA ISLAMIYYAH; a.k.a. JEMA'A ISLAMIYYAH; a.k.a. JEMAAH ISLAMIAH; a.k.a. JEMA'AH ISLAMIYAH; a.k.a. JEMAAH ISLAMIYAH; a.k.a. JEMA'AH ISLAMIYYAH; a.k.a. JEMAAH ISLAMIYYAH); founded by Abdullah Sungkar [FTO] [SDGT]

JENDOUBI, Faouzi Ben Mohamed Ben Ahmed (a.k.a. ''SAID''; a.k.a. ''SAMIR''), Via di Saliceto n.51/9, Bologna, Italy; Via Agucchi n.250, Bologna, Italy; DOB 30 Jan 1966; POB Beja, Tunisia; nationality Tunisia; Passport K459698 issued 6 Mar 1999 expires 5 Mar 2004 (individual) [SDGT]

JIHAD AL-BINA (a.k.a. CONSTRUCTION FOR THE SAKE OF THE HOLY STRUGGLE; a.k.a. CONSTRUCTION JIHAD; a.k.a. HOLY CONSTRUCTION FOUNDATION; a.k.a. JIHAD AL BINAA; a.k.a. JIHAD CONSTRUCTION; a.k.a. JIHAD CONSTRUCTION FOUNDATION; a.k.a. JIHAD CONSTRUCTION INSTITUTION; a.k.a. JIHAD-AL-BINAA ASSOCIATION; a.k.a. JIHADU-I-BINAA; a.k.a. STRUGGLE FOR RECONSTRUCTION), Bekaa Valley, Lebanon; Southern Lebanon, Lebanon; Beirut, Lebanon [SDGT]

JIM'ALE, Ahmed Nur Ali (a.k.a. JIMALE, Ahmad Ali; a.k.a. JIM'ALE, Ahmad Nur Ali; a.k.a. JUMALE, Ahmed Nur; a.k.a. JUMALI, Ahmed Ali), P.O. Box 3312, Dubai, United Arab Emirates; Mogadishu, Somalia (individual) [SDGT]

JIMENEZ BEDOYA, Maria Adriana, Carrera 4 No. 12–20 of. 206, Cartago, Valle, Colombia; c/o INMOBILIARIA PASADENA LTDA., Cartago, Valle, Colombia; c/o ORGANIZACION LUIS HERNANDO GOMEZ BUSTAMANTE Y CIA. S.C.S., Cartago, Valle, Colombia; DOB 13 Apr 1971; Cedula No. 31417388 (Colombia); Passport 31417388 (Colombia) (individual) [SDNT]

JIMENEZ CARDENAS, Amparo, c/o COOPERATIVA MERCANTIL DEL SUR LTDA., Pasto, Colombia; Cedula No. 30726230 (Colombia); Passport 30726230 (Colombia) (individual) [SDNT]

JIMENEZ NARANJO, Carlos Mario (a.k.a. ''MACACO''), Calle 10C No. 25–45, Medellin, Colombia; DOB 26 Feb 1966; POB Envigado, Antioquia, Colombia; Cedula No. 71671990 (Colombia); Passport AH521672 (Colombia); alt. Passport AE915378 (Colombia) (individual) [SDNT]

JIMENEZ NARANJO, Roberto, c/o CASA DEL GANADERO S.A., Medellin, Colombia; c/o TEJAR LA MOJOSA S.A., Caucasia, Antioquia, Colombia; DOB 18 Apr 1963; Cedula No. 18502967 (Colombia) (individual) [SDNT]

JIMENEZ PEREZ, Jose Julian Bruno, c/o INMOBILIARIA LA PROVINCIA S.A. DE C.V., Tijuana, Baja California, Mexico; Avenida Independencia, Colonia Zona Urbana Rio Tijuana, Tijuana, Baja California, Mexico; c/o INMOBILIARIA ESTADO 29 S.A. DE C.V., Tijuana, Baja California, Mexico; Calle Rio Bravo, Colonia Revolucion, Tijuana, Baja California, Mexico; DOB 19 Jun 1961; POB Ensenada, Baja California, Mexico; C.U.R.P. # JIPJ610619HBCMRL07 (Mexico) (individual) [SDNTK]

JIMENEZ, Isabel Cristina, c/o CONTACTEL COMUNICACIONES S.A., Cali, Colombia; c/o INVERSIONES Y CONSTRUCCIONES ATLAS LTDA, Cali, Colombia; c/o COMERCIALIZADORA INTERTEL S.A., Cali, Colombia; DOB 1 Jan 1973; Cedula No. 66852533 (Colombia); Passport 66852533 (Colombia) (individual) [SDNT]

JIMINEZ SOLER, Gillermo, Panama (individual) [CUBA]

JOBE, Baba; nationality Gambia, The; Director, Gambia New Millenium Air Company; Member of Parliament of Gambia (individual) [LIBERIA]

JOKIC, Dragan; DOB 20 Aug 1957; POB Grbavci, Bosnia-Herzegovina; ICTY indictee (individual) [BALKANS]

JOKIC, Miodrag; DOB 1935; POB Mionica, Serbia and Montenegro; ICTY indictee (individual) [BALKANS]

JOKONYA, Tichaona Joseph Benjamin, Samaita Mutasa Farm, Beatrice, Zimbabwe; DOB 27 Dec 1938; Passport D001289 (Zimbabwe); alt. Passport AD000797 (Zimbabwe); alt. Passport ZD002261 (Zimbabwe); Minister of Information and Publicity (individual) [ZIMBABWE]

JOMAGA DE COSTA RICA S.A. (a.k.a. INTERFARMA S.A.), 200 Norte y 25 Oeste del Restaurante Tierra Colombiana, San Francisco de Dos Rios, San Jose, Costa Rica; Numero Judicial # 3–101–76327 (Costa Rica) [SDNT]

JON, Hana Paul, 19 Tudor House, Windsor Way, Brook Green, London, United Kingdom (individual) [IRAQ2]

JONGWE PRINTING AND PUBLISHING COMPANY (a.k.a. JONGWE PRINTING & PUBLISHING COMPANY (PVT) LTD; a.k.a. JONGWE PRINTING AND PUBLISHING CO), 14 Austin Road, Coventry Road, Workington, Harare, Zimbabwe; Po Box 5988, Harare, Zimbabwe [ZIMBABWE]

JOSAFAT S.A., Calle 28 No. 27–18, Tulua, Valle, Colombia; NIT # 800112217–4 (Colombia) [SDNT]

JOSIPOVIC, Drago; DOB 14 Feb 1955; POB Santici, Bosnia-Herzegovina; ICTY indictee (individual) [BALKANS]

JOZA INDUSTRIAL COMPANY (a.k.a. JOZA INDUSTRIES COMPANY), P.O. Box 16595–159, Tehran, Iran [NPWMD]

JUBA DUTY FREE SHOP, Juba, Sudan [SUDAN]

JULAIDAN, Wa'el Hamza Abd Al-Fatah (a.k.a. ''ABU AL-HASAN AL MADANI''; a.k.a. JALADIN, Wa'el Hamza; a.k.a. JALADIN, Wa'il Hamza; a.k.a. JALAIDAN, Wa'el Hamza; a.k.a. JALAIDAN, Wa'il Hamza; a.k.a. JILDAN, Wail H.A.; a.k.a. JULAIDAN, Wa'il Hamza; a.k.a. JULAYDAN, Wa'el Hamza; a.k.a. JULAYDAN, Wa'il Hamza); DOB 22 Jan 1958; alt. DOB 20 Jan 1958; POB Al-Madinah, Saudi Arabia; nationality Saudi Arabia; Passport A-992535 (Saudi Arabia); alt. Passport B 524420 issued 15 Jul 1998 expires 22 May 2003 (individual) [SDGT]

JULKIPLI SALIM Y SALAMUDDIN (a.k.a. JULKIPLI, Salim; a.k.a. KIPLI, Sali); DOB 20 Jun 1976; POB Tulay, Jolo Sulu, Philippines (individual) [SDGT]

JUME'AN, George, P.O. Box 1318, Amman, Jordan (individual) [IRAQ2]

JUNTARAPRAPORN, Aping (a.k.a. CHANTARAPRAPAPORN, Apinya; a.k.a. CHANTHRAPRAPHAPHON, Aphinya; a.k.a. CHANTRAPRAPAPORN, Apinya; a.k.a. CHATARAPRAPAPORN, Apinya), c/o BANGKOK ARTI-FLORA DESIGN

LIMITED PARTNERSHIP, Bangkok, Thailand; c/o BANGKOK SILK FLOWER COMPANY LTD., Bangkok, Thailand; DOB 14 Jan 1955 (individual) [SDNTK]

JURADO CARDONA, Diego Maria, c/o FARMALIDER S.A., Cali, Colombia; c/o MACROFARMA S.A., Pereira, Colombia; Cedula No. 7526942 (Colombia); Passport 7526942 (Colombia) (individual) [SDNT]

JURADO PALOMINO, Orlay (a.k.a. ''COMMANDER HERMES''; a.k.a. ''LIBARDO ANTONIO BENAVIDES MONCAYO''), Colombia; DOB 09 Feb 1950; citizen Colombia; Cedula No. 7245990 (Colombia); International FARC Commission Member for Venezuela (individual) [SDNTK]

JUVENAL VELANDIA, Jose (a.k.a. MUNOZ ORTIZ, Manuel Jesus; a.k.a. ''IVAN RIOS''); DOB 19 Dec 1961; POB San Francisco, Putumayo, Colombia; Cedula No. 71613902 (Colombia) (individual) [SDNTK]

JYG ASESORES LTDA., Carrera 32 No. 25–71, Bogota, Colombia; NIT # 830120367–3 (Colombia) [SDNT]

K. P. TO JEANS WEAR S. DE H., Calle 78 No. 53–70 Local 218, Barranquilla, Colombia; NIT # 800211718–7 (Colombia) [SDNT]

KABABANKOLA MINING COMPANY (a.k.a. KMC), Nr. 1106 Avenue Lomami, Lubumbashi, Katanga, Congo, Democratic Republic of the [ZIMBABWE]

KAHANE CHAI (a.k.a. AMERICAN FRIENDS OF THE UNITED YESHIVA; a.k.a. AMERICAN FRIENDS OF YESHIVAT RAV MEIR; a.k.a. COMMITTEE FOR THE SAFETY OF THE ROADS; a.k.a. DIKUY BOGDIM; a.k.a. DOV; a.k.a. FOREFRONT OF THE IDEA; a.k.a. FRIENDS OF THE JEWISH IDEA YESHIVA; a.k.a. JEWISH IDEA YESHIVA; a.k.a. JEWISH LEGION; a.k.a. JUDEA POLICE; a.k.a. JUDEAN CONGRESS; a.k.a. KACH; a.k.a. KAHANE; a.k.a. KAHANE LIVES; a.k.a. KAHANE TZADAK; a.k.a. KAHANE.ORG; a.k.a. KAHANETZADAK.COM; a.k.a. KFAR TAPUAH FUND; a.k.a. KOACH; a.k.a. MEIR'S YOUTH; a.k.a. NEW KACH MOVEMENT; a.k.a. NEWKACH.ORG; a.k.a. NO'AR MEIR; a.k.a. REPRESSION OF TRAITORS; a.k.a. STATE OF JUDEA; a.k.a. SWORD OF DAVID; a.k.a. THE COMMITTEE AGAINST RACISM AND DISCRIMINATION (CARD); a.k.a. THE HATIKVA JEWISH IDENTITY CENTER; a.k.a. THE INTERNATIONAL KAHANE MOVEMENT; a.k.a. THE JEWISH IDEA YESHIVA; a.k.a. THE JUDEAN LEGION; a.k.a. THE JUDEAN VOICE; a.k.a. THE QOMEMIYUT MOVEMENT; a.k.a. THE RABBI MEIR DAVID KAHANE MEMORIAL FUND; a.k.a. THE VOICE OF JUDEA; a.k.a. THE WAY OF THE TORAH; a.k.a. THE YESHIVA OF THE JEWISH IDEA; a.k.a. YESHIVAT HARAV MEIR) [FTO] [SDGT] [SDT]

KAHIE, Abdullahi Hussein, Bakara Market, Dar Salaam Buildings, Mogadishu, Somalia (individual) [SDGT]

KALAYE ELECTRIC COMPANY (a.k.a. KALA ELECTRIC COMPANY), 33 Fifteenth (15th) Street, Seyed-Jamal-Eddin-Assad Abadi Avenue, Tehran, Iran [NPWMD]

KAMMOUN, Mehdi (a.k.a. KAMMOUN, Mehdi Ben Mohamed Ben Mohamed), Via Masina n.7, Milan, Italy; DOB 3 Apr 1968; POB Tunis, Tunisia; nationality Tunisia; Passport M307707 issued 12 Apr 2000 expires 11 Apr 2005; Italian Fiscal Code: KMMMHD68D03Z352N (individual) [SDGT]

KANAAN, Ghazi, Damascus, Syria; DOB circa 1943; POB Near Qerdaha, Syria; nationality Syria; Minister of Interior, Syria (individual) [SYRIA]

KAN'AN, Fawzi Mustafa (a.k.a. CANAAN, Fazi; a.k.a. CAN'AN, Faouzi; a.k.a. GANAN, Fauzi; a.k.a. KANAAN, Fauzi; a.k.a. KANAAN, Maustaf Fawzi (Faouzi); a.k.a. KAN'AN, Fawzi; a.k.a. KANAN, Fouzi), Esquina Bucare, Building 703, Second Floor, Apartment 20, Caracas, Venezuela; Calle 2, Residencias Cosmos, Fifth Floor, Apartment 5D, La Urbina, Caracas, Venezuela; DOB 7 Jun 1943; alt. DOB 1 Jun 1943; alt. DOB Feb 1943; POB Lebanon; alt. POB Baalbeck, Lebanon; alt. POB Betechelida, Lebanon; National ID No. V–6.919.272 (Venezuela); Passport 0877677 (Venezuela) (individual) [SDGT]

KANGAI, Kumbirai; DOB 17 Feb 1938; Politburo Deputy Secretary for External Relations (individual) [ZIMBABWE]

KARADZIC, Aleksandar 'Sasa'; DOB 14 May 1973; POB Sarajevo, Bosnia-Herzegovina (individual) [BALKANS]

KARADZIC, Luka; DOB 31 Apr 1951; POB Savnik, Serbia and Montenegro (individual) [BALKANS]

KARADZIC, Radovan; DOB 19 Jun 1945; POB Petnica, Serbia and Montenegro; ICTY indictee at large; former president of the Republika Srpska (individual) [BALKANS]

KARADZIC-JOVICEVIC, Sonja; DOB 22 May 1967; POB Sarajevo, Bosnia-Herzegovina (individual) [BALKANS]

KARAGHULLY, Labeed A., Iraq; General Manager of REAL ESTATE BANK (individual) [IRAQ2]

KARAM, Nabil Victor, c/o TRADING AND TRANSPORT SERVICES, P.O. Box 910606, Amman 11191, Jordan; c/o ALFA COMPANY LIMITED FOR INTERNATIONAL TRADING AND MARKETING, P.O. Box 910606, Amman 11191, Jordan; c/o TRADING AND TRANSPORT SERVICES, P.O. Box 212953, Amman 11121, Jordan; c/o TRADING AND TRANSPORT SERVICES, Al-Razi Medical Complex, Jabal Al-Hussein, Amman, Jordan; c/o ALFA COMPANY LIMITED FOR INTERNATIONAL TRADING AND MARKETING, P.O. Box 212953, Amman 11121, Jordan; DOB 1954; nationality Lebanon (individual) [IRAQ2]

KAREN OVERSEAS FLORIDA, INC., 9100 South Dadeland Boulevard, Suite 912, Miami, FL 33156; 780 NW Le Jeune Road, Suite 516, Miami, FL 33126; 780 NW 42nd Avenue, Suite 516, Miami, FL 33126; US FEIN 592827636 (United States) [SDNT]

KAREN OVERSEAS, INC., Panama City, Panama; C.R. No. 194799/0011 (Panama); RUC # 2172211194799 (Panama) [SDNT]

KARIAN LTDA., Calle 23 No. 68A–95, Bogota, Colombia; NIT # 800166692–1 (Colombia) [SDNT]

KARIM (a.k.a. IRAN KARIM); Vessel Registration Identification IMO 9465758 (vessel) [NPWMD]

KARIMA DATE FACTORY, Karima, Sudan [SUDAN]

KARIMA FRUIT AND VEGETABLE CANNING FACTORY, P.O. Box 54, Karima, Sudan [SUDAN]

KARIMANZIRA, David; DOB 25 May 1947; Harare Provincial Governor & Politburo Secretary for Finance (individual) [ZIMBABWE]

KASMURI, Abdul Manaf (a.k.a. KASMURI, Lt. Col. (Rtd). Abd Manaf); DOB 29 May 1955; POB Malaysia; nationality Malaysia (individual) [SDGT]

KASPAR SHIPPING CO. S.A., c/o EMPRESA DE NAVEGACION CARIBE, Edificio Lonja del Comercio, Lamparilla 2, Caja Postal 1784, Havana 1, Cuba [CUBA]

KASSALA FRUIT PROCESSING COMPANY, Khartoum, Sudan [SUDAN]

KASSALA ONION DEHYDRATION FACTORY, P.O. Box 22, Kassala, Sudan [SUDAN]

KASUKUWERE, Savior, 78 Enterprise Road, Chisipite, Harare, Zimbabwe; DOB 23 Oct 1970; Deputy Minister for Youth Development and Employment Creation & Deputy Secretary for Youth Affairs (individual) [ZIMBABWE]

KATTUS CORPORATION, Bridgetown, St. Michael, Barbados; Registration ID 67199901 (Barbados) [SDNT]

KATTUS II CORPORATION, Panama City, Panama; C.R. No. 390286/172468 (Panama); RUC # 1724681390286 (Panama) [SDNT]

KAUKONDE, Ray Joseph, Private Bag 7706, Causeway, Harare, Zimbabwe; DOB 4 Mar 1963; Mashonaland East Provincial Governor (individual) [ZIMBABWE]

KAVE, S.A., Panama [CUBA]

KAVEH CUTTING TOOLS COMPANY (a.k.a. KAVEH CUTTING TOOLS; a.k.a. KAVEH CUTTING TOOLS COMPLEX; a.k.a. KAVEH CUTTING TOOLS FACTORIES), Km 4 of Khalaj Road, End of Seyedi Street, Mashad, Iran; Moqan St., Pasdaran St., Pasdaran Cross Rd., Tehran, Iran; Khalaj Rd., End of Seyyedi Alley, Mashad, Iran; 3rd Km of Khalaj Road, Seyyedi Street, Mashad 91638, Iran; P.O. Box 91735–549, Mashad, Iran [NPWMD]

KAVOSHYAR COMPANY (a.k.a. KAAVOSH YAAR; a.k.a. KAVOSHYAR), Vanaq Square, Corner of Shiraz Across No. 71, Molla Sadra Ave., Tehran, Iran; No. 86, 20th St., North Karegar Ave., Tehran, Iran; P.O. Box 19395–1834, Tehran, Iran [NPWMD]

KAZAN, Ali Muhammad (a.k.a. KASSAN, Ali Mohamad; a.k.a. QAZAN, Ali Mohamad), Avenue Taroba, 1005 Edificio Beatriz Mendes, Apt 1704, Foz do Iguacu, Brazil; DOB 19 Dec 1967; POB Taibe, Lebanon; citizen Lebanon; alt. citizen Paraguay; Passport 0089044 (Lebanon) (individual) [SDGT]

KAZIM, Rashid Taan; nationality Iraq; Ba'th party regional command chairman, al-Anbar (individual) [IRAQ2]

KECHIK, Mahmood Awang, Ampang Puteri Specialist Hospital, 1, Jalan Mamanda 9, Selangor Darul Ehsan 68000, Malaysia; DOB 22 Aug 1954; citizen Malaysia; nationality Malaysia; Dr. (individual) [ZIMBABWE]

KEENCLOUD LIMITED, 11 Catherine Place, Westminister, London, United Kingdom [IRAQ2]

KENAF SOCKS FACTORY, Abu Naama, Sudan [SUDAN]
KESMAN OVERSEAS, 3rd Floor, Geneva Place, Waterfront Drive, Road Town, Tortola, Virgin Islands, British [SDNT]
KETABACHI, Mehrdada Akhlaghi (a.k.a. KETABCHI, Merhdada Akhlaghi), c/o SBIG, Tehran, Iran; DOB 10 Sep 1958; nationality Iran; Passport A0030940 (Iran) (individual) [NPWMD]
KHALED, Abdulbaqi Mohammed (a.k.a. KHALED, Abul Baki; a.k.a. KHALED, Abul Baki Mohammed; a.k.a. MOHAMMED, Abd' al-Baki; a.k.a. ''ABU KHAWLA''), Birmingham, United Kingdom; DOB 18 Aug 1957; POB Tripoli, Libya; citizen United Kingdom (individual) [SDGT]
KHALIL, Dr. Ahmad Murtada Ahmad (a.k.a. KHALIL, Ahmad Murtadha Ahmad), Iraq; Former Minister of Transport and Communications (individual) [IRAQ2]
KHALIL, Ibrahim Mohamed (a.k.a. AL ZAFIRI, Khalil Ibrahim; a.k.a. JASSEM, Khalil Ibrahim; a.k.a. MOHAMMAD, Khalil Ibrahim), Frankenthal Prison, Germany; Pankratiusstrause 44, Mainz 55118, Germany; DOB 2 Jul 1975; alt. DOB 2 May 1972; alt. DOB 3 Jul 1975; alt. DOB 1972; POB Mosul, Iraq; alt. POB Baghdad, Iraq; nationality Iraq; Travel Document Number A0003900 (Germany) (individual) [SDGT]
KHAN & SCHIRINDEL GMBH, Schwalbacher Strasse 19, Weisbaden 65185, Germany; C.R. No. HRB20555 (Germany) [SDNTK]
KHAN, Abdul Qadeer (a.k.a. ZAMAN, Hayder); DOB 27 Apr 1936; POB Bhopal, India; nationality Pakistan; Passport D000428 (Pakistan) (individual) [NPWMD]
KHAN, Nasir Ali (a.k.a. KHAN, Ali; a.k.a. KHAN, Nafir Ali; a.k.a. KHAN, Nazir Ali; a.k.a. KHAN, Nisan Ali; a.k.a. KHAN, Nisar Ali; a.k.a. NASIR, Ali Khan; a.k.a. NASIR, Khan Ali); DOB 1 Oct 1955; POB Pakistan (individual) [SDNTK]
KHAN, Shahbaz (a.k.a. HAN, Cellat; a.k.a. HAN, Sahbaz; a.k.a. KHAN GALAT KHAN, Shahbaz; a.k.a. KHAN JALAT KHAN, Shahbaz; a.k.a. KHAN ZADRAN, Shahbaz; a.k.a. KOCHI, Haji Shahbaz Khan; a.k.a. KOOCHI, Shahbaz; a.k.a. ZADRAN, Haji Shabaz; a.k.a. ZADRAN, Haji Shahbaz; a.k.a. ZADRAN, Shabbaz; a.k.a. ZADRAN, Shahbaz; a.k.a. ''HAJI SHABBAZ''; a.k.a. ''HAJI SHAHBAZ''; a.k.a. ''HAJI SHAHBAZ KOOCHI''), c/o SHAHNAWAZ TRADERS, Peshawar, Pakistan; Hanover, Germany; Peshawar, Pakistan; c/o SHER MATCH INDUSTRIES (PVT.) LIMITED, Peshawar, Pakistan; c/o SHAHBAZ TV CENTER, Peshawar, Pakistan; c/o KHAN & SCHIRINDEL GMBH, Weisbaden, Germany; c/o SHAHBAZ KHAN GENERAL TRADING LLC, Dubai, United Arab Emirates; c/o SAF TECH S.L., Barcelona, Spain; Dubai, United Arab Emirates; c/o DUBAI TRADING COMPANY, Peshawar, Pakistan; DOB 01 Jan 1948; POB Landi Kotal, Pakistan; citizen Pakistan; Passport AB4106401 (Pakistan) (individual) [SDNTK]
KHAN, Sherbaz, P.O. Box 33651, Dubai, United Arab Emirates; c/o SHER MATCH INDUSTRIES (PVT.) LIMITED, Peshawar, Pakistan; Peshawar, Pakistan; c/o SHAHBAZ KHAN GENERAL TRADING LLC, Dubai, United Arab Emirates; DOB 03 Apr 1979; POB Khyber Agency, Pakistan; citizen Pakistan; Passport 137987 (Pakistan) (individual) [SDNTK]
KHARTOUM CENTRAL FOUNDRY, Khartoum, Sudan [SUDAN]
KHARTOUM COMMERCIAL AND SHIPPING COMPANY LIMITED, Kasr Avenue, P.O. Box 221, Khartoum, Sudan [SUDAN]
KHARTOUM TANNERY, P.O. Box 134, Khartoum South, Sudan [SUDAN]
KHATAM OL ANBIA GHARARGAH SAZANDEGI NOOH (a.k.a. GHORB KHATAM; a.k.a. KHATAM AL-ANBYA; a.k.a. KHATAM OL AMBIA), No. 221, Phase 4, North Falamak-Zarafshan Intersection, Shahrak-E-Ghods, Tehran 14678, Iran [NPWMD]
KHAYRBIK, Muhammad Nasif (a.k.a. KHAIRBEK, Mohammed Nassif; a.k.a. KHAYR-BAYK, Muhammad Nasif; a.k.a. KHEIR BEIK, Mohamad; a.k.a. KHEIR BEIK, Mohamad Nassif; a.k.a. KHEIRBEK, Mohammad Nasif), Damascus, Syria; DOB 5 Apr 1937; POB Hama, Syria; Passport D000000483, Diplomatic (Syria); Syrian Deputy Vice President for Security Affairs; Major General (individual) [SYRIA]
KHAZAR SEA SHIPPING LINES (a.k.a. DARYA-YE KHAZAR SHIPPING COMPANY; a.k.a. KHAZAR SHIPPING CO), No. 1, End of Shahid Mostafa Khomeini St., Tohid Square, P.O. Box 43145, Bandar Anzali 1711–324, Iran; M. Khomeini St., Ghazian, Bandar Anzali, Gilan, Iran [NPWMD]
KHINE, Oo Oo (a.k.a. ''OO OO KHINE''; a.k.a. ''U OO OO KHINE''), 15 Bongyi Street, Lanmadaw Township, Rangoon, Burma; c/o TET KHAM GEMS CO., LTD., Yangon, Burma; c/o TET KHAM CONSTRUCTION COMPANY LIMITED, Mandalay, Burma; c/o YANGON AIRWAYS COMPANY LIMITED, Rangoon, Burma; National ID No. 009016 (Burma); Passport A056782 (Burma) (individual) [SDNTK]
KHOR OMER ENGINEERING COMPANY, P.O. Box 305, Khartoum, Sudan [SUDAN]
KHORASAN METALLURGY INDUSTRIES (a.k.a. KHORASAN AMMUNITION AND METALLURGY INDUSTRIES; a.k.a. KHORASAN METALOGY INDUSTRIES; a.k.a. SANAYE METOLOGIE IRAN; a.k.a. THE METALLURGY INDUSTRIES OF KHORASAN), Khalaj Road, End of Seyedi Street, Mashad, Iran; P.O. Box 91735–549, Mashad, Iran [NPWMD]
KHUM THAW COMPANY LIMITED, 261 Wichayanont Road, Chang Moi, Muang, Chiang Mai 50300, Thailand; Registration ID 0505535000804 (Thailand) issued 28 Feb 1992 [SDNTK]
KIFANE, Abderrahmane, Via S. Biagio, 35, Sant'Anastasia, Naples, Italy; Via S. Biagio, 32, Sant'Anastasia, Naples, Italy; DOB 7 Mar 1963; POB Casablanca, Morocco (individual) [SDGT]
KIIA TAI, Joseph Wong; Executive, Oriental Timber Company (individual) [LIBERIA]
KINDHEARTS FOR CHARITABLE HUMANITARIAN DEVELOPMENT, INC., Mar Elyas Street, Hiba Center, 1st Floor, Beirut, Lebanon; Jenin, West Bank, Palestinian; P.O. Box 23310, Toledo, OH 43623; Ramallah, West Bank, Palestinian; Pakistan; P.O. Box 1248, Gaza, Palestinian; 3450 West Central Avenue, #366, Toledo, OH 43606 [BPI-PA]
KISHK, Samir; DOB 14 May 1955; POB Gharbia, Egypt (individual) [SDGT]
KISONI, Kambale (a.k.a. KAMBALE, Kisoni; a.k.a. KISONI, Dr.); DOB 24 May 1961; citizen Congo, Democratic Republic of the; Passport C0323172 (Congo, Democratic Republic of the) (individual) [DRCONGO]
KLEILAT, Ali; DOB 10 Jul 1970; POB Beirut, Lebanon; nationality Lebanon; Businessman (individual) [LIBERIA]
KNEZEVIC, Dusan; DOB 23 Jun 1955; POB Orlovci, Bosnia-Herzegovina; ICTY indictee in custody (individual) [BALKANS]
KNOWLES, Samuel (a.k.a. KNOWLES, JR., Samuel); DOB 28 May 1959; POB Bahamas (individual) [SDNTK]
KO, Myint Myint (a.k.a. KO, Daw Myint Myint); DOB 11 Jan 1946; wife of Saw Tun (individual) [BURMA]
KOHAS AG, Route des Arsenaux 15, Fribourg, FR 1700, Switzerland; C.R. No. CH–217.0.135.719–4 (Switzerland) [NPWMD]
KOJIC, Radomir (a.k.a. ''MINEUR''); DOB 23 Nov 1950; POB Bijela Voda, Sokolac Canton, Bosnia-Herzegovina; Passport 3943074 (Bosnia and Herzegovina) issued 27 Sep 2002 in Sarajevo; Bosnia-Herzegovina (individual) [BALKANS]
KOL INVESTMENTS, INC., Miami, FL [CUBA]
KOMOTKO, 12 Pop Lukina, Belgrade, Serbia; Registration ID 17307746 (Serbia); Tax ID No. 100036378 (Serbia) [BALKANS]
KONTROLES ELECTRONICOS DE BAJA CALIFORNIA, S.A. DE C.V. (a.k.a. KONTROLES), Ave. Azueta 11750, Col. Libertad, Tijuana, Baja California CP 22400, Mexico; R.F.C. KEB–020222–380 (Mexico) [SDNTK]
KONY, Joseph; DOB 1961; alt. DOB 1963; alt. DOB 1965; POB Odek, Omoro, Gulu, Uganda; nationality Uganda (individual) [SDGT]
KORDIC, Dario; DOB 14 Dec 1960; POB Sarajevo, Bosnia-Herzegovina; ICTY indictee (individual) [BALKANS]
KORDOFAN COMPANY, Khartoum, Sudan [SUDAN]
KOREA COMPLEX EQUIPMENT IMPORT CORPORATION, Rakwon-dong, Pothonggang District, Pyongyang, Korea, North [NPWMD]
KOREA INTERNATIONAL CHEMICAL JOINT VENTURE COMPANY (a.k.a. CHOSON INTERNATIONAL CHEMICALS JOINT OPERATION COMPANY; a.k.a. CHOSUN INTERNATIONAL CHEMICALS JOINT OPERATION COMPANY; a.k.a. INTERNATIONAL CHEMICAL JOINT VENTURE CORPORATION), Hamhung, South Hamgyong Province, Korea, North; Man gyongdae-kuyok, Pyongyang, Korea, North; Mangyungdae-gu, Pyongyang, Korea, North [NPWMD]
KOREA KWANGSONG TRADING CORPORATION, Rakwon-dong, Pothonggang District, Pyongyang, Korea, North [NPWMD]
KOREA MINING DEVELOPMENT TRADING CORPORATION (a.k.a. CHANGGWANG SINYONG CORPORATION; a.k.a. EXTERNAL TECHNOLOGY GENERAL CORPORATION; a.k.a. NORTH KOREAN MINING DEVELOPMENT TRADING

CORPORATION; a.k.a. ''KOMID''), Central District, Pyongyang, Korea, North [NPWMD]

KOREA PUGANG TRADING CORPORATION, Rakwon-dong, Pothonggang District, Pyongyang, Korea, North [NPWMD]

KOREA RYONBONG GENERAL CORPORATION (a.k.a. KOREA YONBONG GENERAL CORPORATION; f.k.a. LYONGAKSAN GENERAL TRADING CORPORATION), Rakwon-dong, Pothonggang District, Pyongyang, Korea, North; Pot'onggang District, Pyongyang, Korea, North [NPWMD]

KOREA RYONGWANG TRADING CORPORATION (a.k.a. KOREA RYENGWANG TRADING CORPORATION), Rakwon-dong, Pothonggang District, Pyongyang, Korea, North [NPWMD]

KOREA RYONHA MACHINERY JOINT VENTURE CORPORATION (a.k.a. CHOSUN YUNHA MACHINERY JOINT OPERATION COMPANY; a.k.a. KOREA RYENHA MACHINERY J/V CORPORATION; a.k.a. RYONHA MACHINERY JOINT VENTURE CORPORATION), Mangungdae-gu, Pyongyang, Korea, North; Mangyongdae District, Pyongyang, Korea, North; Central District, Pyongyang, Korea, North [NPWMD]

KOS, Milojica; DOB 1 Apr 1963; POB Lamovita, Bosnia-Herzegovina; ICTY indictee (individual) [BALKANS]

KOUWENHOVEN, Gus (a.k.a. KOUENHAVEN, Gus; a.k.a. KOUENHOVEN, Gus; a.k.a. KOUVENHOVEN, Gus), Villa # 1, Hotel Africa Virginia, Monrovia, Liberia; P.O. Box 1522, Monrovia, Liberia; DOB 15 Sep 1942; nationality Netherlands; President, Oriental Timber Company; Owner, Hotel Africa (individual) [LIBERIA]

KOVAC, Tomislav (a.k.a. ''TOMO''); DOB 4 Dec 1959; POB Sarajevo, Bosnia-Herzegovina; Passport 412959171315 (Bosnia and Herzegovina) (individual) [BALKANS]

KOVACEVIC, Vladimir; DOB 15 Jan 1961; ICTY indictee (individual) [BALKANS]

KRADUMPORN IMPORT EXPORT COMPANY LTD., 4 Mu 1, Tambon Wiang Phang Kham, Mae Sai district, Chiang Rai, Thailand [SDNTK]

KRADUMPORN, Somboon (a.k.a. KRADOOMPORN, Chinwong; a.k.a. KRADUMPHON, Sombun; a.k.a. KRADUMPORN, Chinawong; a.k.a. KRADUMPORN, Chinwong; a.k.a. KRAPOOMPORN, Somboon; a.k.a. KRAPUMPORN, Somboon; a.k.a. KRATUMPORN, Somboon), c/o HATKAEW COMPANY LTD., Bangkok, Thailand; c/o PROGRESS SURAWEE COMPANY LTD., Bangkok, Thailand; c/o SCORE COMMERCIAL COMPANY LTD., Bangkok, Thailand; c/o MAESAI K.D.P. COMPANY LTD., Chiang Rai, Thailand; c/o RUNGRIN COMPANY LTD., Bangkok, Thailand; c/o SIAM NICE COMPANY LTD., Bangkok, Thailand; c/o KRADUMPORN IMPORT EXPORT COMPANY LTD., Chiang Rai, Thailand; c/o V.R. FRUIT COMPANY, Chiang Mai, Thailand; DOB 6 May 1959; National ID No. 3570900151471 (Thailand) (individual) [SDNTK]

KRADUMPORN, Varee (a.k.a. KRADOOMPORN, Chanikan; a.k.a. KRADOOMPORN, Varee; a.k.a. KRADOOMPORN, Wari; a.k.a. KRADUMPHON, Chanikan; a.k.a. KRADUMPHON, Wari; a.k.a. KRADUMPORN, Chanikan; a.k.a. KRADUMPORN, Waree; a.k.a. KRAPUMPORN, Varee; a.k.a. KRATUMPORN, Varee), c/o SIAM NICE COMPANY LTD., Bangkok, Thailand; c/o PLUS TECH AUTO SUPPLY COMPANY LTD., Bangkok, Thailand; c/o SCORE COMMERCIAL COMPANY LTD., Bangkok, Thailand; c/o RATTANA VICHAI COMPANY LTD., Bangkok, Thailand; c/o KRADUMPORN IMPORT EXPORT COMPANY LTD., Chiang Rai, Thailand; c/o HATKAEW COMPANY LTD., Bangkok, Thailand; c/o MAESAI K.D.P. COMPANY LTD., Chiang Rai, Thailand; c/o NICE FANTASY GARMENT COMPANY LTD., Bangkok, Thailand; c/o PROGRESS SURAWEE COMPANY LTD., Bangkok, Thailand; c/o RUNGRIN COMPANY LTD., Bangkok, Thailand; DOB 18 Mar 1960; National ID No. 3570900151480 (Thailand) (individual) [SDNTK]

KRAJISNIK, Momcilo; DOB 20 Jan 1945; POB Zabrdje, Bosnia-Herzegovina; ICTY indictee (individual) [BALKANS]

KRIKAH INDUSTRIES GROUP, P.O. Box 755, Khartoum North, Sudan [SUDAN]

KRNOJELAC, Milorad; DOB 25 Jul 1940; POB Birotici, Bosnia-Herzegovina; ICTY indictee (individual) [BALKANS]

KRSTIC, Radislav; DOB 15 Feb 1948; POB Nedjeljiste, Vlasenica, Bosnia-Herzegovina; ICTY indictee (individual) [BALKANS]

KRUNIC, Savo (a.k.a. KRUNIC, Savko), Sokolac, Bosnia and Herzegovina; DOB 27 Jan 1958; POB Sokolac, Bosnia-Herzegovina; Passport 3667905 (Bosnia and Herzegovina); Director, Srpska Sume Forestry Company, Sokolac, Bosnia-Herzegovina (individual) [BALKANS]

KRYEZIU, Izmet; DOB 3 Oct 1954; POB Pagarusha-Malishev, Serbia and Montenegro (individual) [BALKANS]

KUBURA, Amir; DOB 4 Mar 1964; POB Kakanj, Bosnia-Herzegovina; ICTY indictee (individual) [BALKANS]

KUJUNDZIC, Predrag (a.k.a. ''PREDO''); DOB 30 Jan 1961; POB Suho Polje, Doboj, Bosnia-Herzegovina (individual) [BALKANS]

KUNARAC, Dragoljub; DOB 15 May 1960; POB Foca, Bosnia-Herzegovina; ICTY indictee (individual) [BALKANS]

KUNFUTH, Abbas Khalaf, House 21, Lane 17, Subdivision 603, Dragh District, Al-Mansour; DOB 1955; POB Baghdad, Iraq (individual) [IRAQ2]

KURDISTAN WORKERS' PARTY (a.k.a. FREEDOM AND DEMOCRACY CONGRESS OF KURDISTAN; a.k.a. HALU MESRU SAVUNMA KUVVETI (HSK); a.k.a. KADEK; a.k.a. KGK; a.k.a. KONGRA-GEL; a.k.a. KURDISTAN FREEDOM AND DEMOCRACY CONGRESS; a.k.a. KURDISTAN PEOPLE'S CONGRESS (KHK); a.k.a. PARTIYA KARKERAN KURDISTAN; a.k.a. PEOPLE'S CONGRESS OF KURDISTAN; a.k.a. PKK; a.k.a. THE PEOPLE'S DEFENSE FORCE) [FTO] [SDGT] [SDNTK]

KUTRY MANAGEMENT INC., Torre Universal Building, 3rd Floor, Federico Boyd Avenue and 51st Street, Panama City, Panama; RUC # 34407212255995 (Panama) [SDNT]

KVOCKA, Miroslav; DOB 1 Jan 1957; POB Maricka, Bosnia-Herzegovina; ICTY indictee (individual) [BALKANS]

KYA, La Bo (a.k.a. ''CHA LA BO''; a.k.a. ''JA LA BO''; a.k.a. ''KYA LA BO''), Nakawngmu, Shan, Burma; Wan Hong, Shan, Burma; DOB 1940; alt. DOB 1942 (individual) [SDNTK]

KYOEI INTERNATIONAL COMPANY, LIMITED, Tokyo, Japan [CUBA]

L.GR. E.U. (a.k.a. PLATERIA L.GR. E.U.), Calle 38N No. 6N–35, Loc. 46, Cali, Colombia; NIT # 805024405–3 (Colombia) [SDNT]

LA COMPANIA GENERAL DE NIQUEL (a.k.a. GENERAL NICKEL SA), Cuba [CUBA]

LA COMPANIA TIENDAS UNIVERSO S.A. (a.k.a. WWW.CUBA-SHOP.NET) [CUBA]

LA CROSSE GROUP INC, Vanterpool Plaza, 2nd Floor, Wickhams Cay 1, Road Town, Tortola, Virgin Islands, British; Registration ID 268379 (Virgin Islands, British) [SDNTK]

LA EMPRESA CUBANA DE FLETES (a.k.a. CUBAN FREIGHT ENTERPRISE; a.k.a. CUFLET), Mexico [CUBA]

LA EMPRESA CUBANA DE FLETES (a.k.a. CUBAN FREIGHT ENTERPRISE; a.k.a. CUFLET), Varna, Bulgaria [CUBA]

LA EMPRESA CUBANA DE FLETES (a.k.a. CUBAN FREIGHT ENTERPRISE; a.k.a. CUFLET), Syczecin, Poland [CUBA]

LA EMPRESA CUBANA DE FLETES (a.k.a. CUBAN FREIGHT ENTERPRISE; a.k.a. CUFLET), Pyongyang, Korea, North [CUBA]

LA EMPRESA CUBANA DE FLETES (a.k.a. CUBAN FREIGHT ENTERPRISE; a.k.a. CUFLET), Moscow, Russia [CUBA]

LA EMPRESA CUBANA DE FLETES (a.k.a. CUBAN FREIGHT ENTERPRISE; a.k.a. CUFLET), Barcelona, Spain [CUBA]

LA EMPRESA CUBANA DE FLETES (a.k.a. CUBAN FREIGHT ENTERPRISE; a.k.a. CUFLET), Montreal, Canada [CUBA]

LA EMPRESA CUBANA DE FLETES (a.k.a. CUBAN FREIGHT ENTERPRISE; a.k.a. CUFLET), Genoa, Italy [CUBA]

LA EMPRESA CUBANA DE FLETES (a.k.a. CUBAN FREIGHT ENTERPRISE; a.k.a. CUFLET), Rostock, Germany [CUBA]

LA EMPRESA CUBANA DE FLETES (a.k.a. CUBAN FREIGHT ENTERPRISE; a.k.a. CUFLET), Rotterdam, Netherlands [CUBA]

LA EMPRESA CUBANA DE FLETES (a.k.a. CUBAN FREIGHT ENTERPRISE; a.k.a. CUFLET), Buenos Aires, Argentina [CUBA]

LA FAMILIA MICHOACANA, Mexico [SDNTK]

LA FRONTERA UNION GALVEZ Y CIA S EN C (f.k.a. LA FRONTERA PUERTA GALVEZ LTDA.), Carrera 30 No. 90–82, Bogota, Colombia; NIT # 800050795–2 (Colombia) [SDNT]

LA HOLANDA S.A., Calle 23C No. 3BISN–26, Cali, Colombia; NIT # 805025864–5 (Colombia) [SDNT]

LA MONEDITA DE ORO LTDA, Carrera 7 No. 115–60 Local C227, Bogota, Colombia; NIT # 800149502–9 (Colombia) [SDNTK]
LAAGOUB, Abdelkader, via Europa, 4—Paderno Ponchielli, Cremona, Italy; DOB 23 Apr 1966; POB Casablanca, Morocco; nationality Morocco; Italian Fiscal Code LGBBLK66D23Z330U (individual) [SDGT]
LABORATORIOS BLAIMAR DE COLOMBIA S.A. (a.k.a. BLAIMAR), Calle 12B 27 39, Bogota, Colombia [SDNT]
LABORATORIOS BLANCO PHARMA S.A. (a.k.a. BLANCO PHARMA S.A.), Carrera 99 y 100 No. 46A–10, Bodega 4, Bogota, Colombia [SDNT]
LABORATORIOS GENERICOS VETERINARIOS DE COLOMBIA S.A, Carrera 71 No. 57–07, Bogota, Colombia [SDNT]
LABORATORIOS KRESSFOR DE COLOMBIA S.A. (a.k.a. KRESSFOR), Calle 16 28A 51, Bogota, Colombia; Calle 16 28A 57, Bogota, Colombia; Calle 17A 28 43, Bogota, Colombia; Calle 17 28A–43, Bogota, Colombia [SDNT]
LABORATORIOS PROFARMA LTDA., Calle 74 No. 15–80 of. 611 Int. 1, Bogota, Colombia; Calle 23 No. 19–75, Bogota, Colombia; Calle 17 No. 28A–13, Bogota, Colombia; NIT # 800217468–8 (Colombia) [SDNT]
LABORATORIOS WILLMAR, S.A. DE C.V., Calle Esteban Loera 481, Colonia Beatriz Hernandez, Guadalajara, Jalisco 44760, Mexico; Los Placeres No. 1030, Colonia Chapalita, Guadalajara, Jalisco 44100, Mexico; Calle Esteban Loera No. 481, Colonia Zona Obrera, Guadalajara, Jalisco 44760, Mexico; R.F.C. LW1760923BT6 (Mexico) [SDNTK]
LABORATORIOS Y COMERCIALIZADORA DE MEDICAMENTOS DROBLAM S.A. (a.k.a. DROBLAM S.A.), Carrera 21 No. 13B–33, Cali, Colombia; NIT # 805014078–5 (Colombia) [SDNT]
LABRA AVILES, Jesus Abraham (a.k.a. AVILES, Jesus Labra; a.k.a. ''CHUY LABRA''); DOB 1945; nationality Mexico (individual) [SDNTK]
LADEHYANOY, Mufti Rashid Ahmad (a.k.a. AHMAD, Mufti Rasheed; a.k.a. LUDHIANVI, Mufti Rashid Ahmad; a.k.a. WADEHYANOY, Mufti Rashid Ahmad), Karachi, Pakistan (individual) [SDGT]
LADINO AVILA, Jaime Arturo (a.k.a. COLOSIO, Vincente; a.k.a. CONTREAS, Miguel Angel; a.k.a. ''EL OJON''; a.k.a. ''FAYO''), c/o GRUPO ROLA S.A. DE C.V., Colima, Colima, Mexico; Calle Jesus Ponce 1083, Colonia Jardin Vista Hermosa, Colima, Colima, Mexico; DOB 24 Jul 1964; alt. DOB 13 Nov 1964; alt. DOB 26 Aug 1962; citizen Mexico; nationality Mexico; C.U.R.P. LAAJ640724HCMDVM07 (Mexico); R.F.C. LAAJ640724 (Mexico) (individual) [SDNTK]
LADRILLERA LA CANDELARIA LTDA., Avenida 6 Norte No. 17N–92, of. 514, Cali, Colombia; Correg. Buchitolo, Vereda Tres Esquinas, Candelaria, Colombia; NIT # 800119741–4 (Colombia) [SDNT]
LAJNAT AL DAAWA AL ISLAMIYYA (a.k.a. ISLAMIC CALL COMMITTEE; a.k.a. LAJNA ALDAWA ALISALMIAH; a.k.a. LAJNA ALDAWA ALISLAMIA; a.k.a. LAJNA ALDAWA ALISLAMIYA; a.k.a. LAJNAT AL DAAWA AL ISLAMIYA; a.k.a. LAJNAT AL DAWA; a.k.a. LAJNAT AL DAWA AL ISLAMIA; a.k.a. LAJNAT AL D'AWA AL ISLAMIAK; a.k.a. LAJNAT ALDAWA AL ISLAMIAH; a.k.a. LAJNAT ALDAWA ALISLAMIA), Kuwait [SDGT]
LAKHVI, Zaki-ur-Rehman (a.k.a. ARSHAD, Abu Waheed Irshad Ahmad; a.k.a. LAKVI, Zaki Ur-Rehman; a.k.a. LAKVI, Zakir Rehman; a.k.a. REHMAN, Zakir; a.k.a. UR-REHMAN, Zaki; a.k.a. ''CHACHAJEE''), Chak No. 18/IL, Rinala Khurd, Tehsil Rinala Khurd, District Okara, Pakistan; Barahkoh, P.O. DO, Tehsil and District Islamabad, Pakistan; DOB 30 Dec 1960; POB Okara, Pakistan; nationality Pakistan; National ID No. 61101–9618232–1 (Pakistan) (individual) [SDGT]
LAKOKRASKA OAO (a.k.a. LAKOKRASKA OPEN JOINT-STOCK COMPANY), 71 Ignatova Street, Grodnenskaya Region, Lida 231300, Belarus; ul. Ignatova, 71, Grodnenskaya oblast, Lida 231300, Belarus [BELARUS]
LAKSHMI, Panama [CUBA]
LALOVIC, Dragan 'Mate'; DOB 14 Jun 1953; POB Vlaholje, nr Kalinovik, Bosnia-Herzegovina (individual) [BALKANS]
LANDZO, Esad; DOB 7 Mar 1973; ICTY indictee (individual) [BALKANS]
LANGA, Andrew; DOB 13 Jan 1965; Deputy Minister of Environment and Tourism (individual) [ZIMBABWE]
LAO, Ssu (a.k.a. HATSADIN, Phonsakunphaisan; a.k.a. RUNGRIT, Thianphichet; a.k.a. WANG, Ssu; a.k.a. WANG, Wen Chou; a.k.a. WITTHAYA, Ngamthiralert; a.k.a. ''LAO SSU''), Burma; DOB 01 Jan 1960; National ID No. 3570700443258 (Thailand); Passport P403726 (Thailand) (individual) [SDNTK]
LARGO LEASING LTD., c/o T.R.C. Corporate Services Limited P.O. Box 1982, George Town, Cayman Islands [SDNT]
LARRANAGA CALVACHE, Juan Carlos, c/o INMOBILIARIA BOLIVAR LTDA., Cali, Colombia; c/o ADMINISTRACION INMOBILIARIA BOLIVAR S.A., Cali, Colombia; c/o INVERSIONES EL PENON S.A., Cali, Colombia; c/o COMERCIALIZADORA INTERNACIONAL VALLE DE ORO S.A., Cali, Colombia; DOB 18 Mar 1964; Cedula No. 12982064 (Colombia) (individual) [SDNT]
LAS COLORADOS (vessel) [CUBA]
LASA PERU S.A.C., Jr. Emilio Althaus 748, Int. 3, Lima, Peru; RUC # 20509588091 (Peru) [SDNTK]
LASHKAR E-TAYYIBA (a.k.a. AL MANSOOREEN; a.k.a. AL MANSOORIAN; a.k.a. ARMY OF THE PURE; a.k.a. ARMY OF THE PURE AND RIGHTEOUS; a.k.a. ARMY OF THE RIGHTEOUS; a.k.a. IDARA KHIDMAT-E-KHALQ; a.k.a. JAMA'AT AL-DAWA; a.k.a. JAMAAT UD-DAAWA; a.k.a. JAMAAT UL-DAWAH; a.k.a. JAMA'AT-I-DAWAT; a.k.a. JAMAATI-UD-DAWA; a.k.a. JAMA'AT-UD-DA'AWA; a.k.a. JAMA'AT-UD-DA'AWAH; a.k.a. JAMAAT-UD-DAWA; a.k.a. JAMAAT-UL-DAWA; a.k.a. JAMAIAT-UD-DAWA; a.k.a. LASHKAR E-TOIBA; a.k.a. LASHKAR-I-TAIBA; a.k.a. PAASBAN-E-AHLE-HADIS; a.k.a. PAASBAN-E-KASHMIR; a.k.a. PAASBAN-I-AHLE-HADITH; a.k.a. PASBAN-E-AHLE-HADITH; a.k.a. PASBAN-E-KASHMIR; a.k.a. ''JUD''), Pakistan [SDGT] [FTO]
LASHKAR I JHANGVI (LJ) (a.k.a. LASHKAR E JHANGVI; a.k.a. LASHKAR-I-JHANGVI) [FTO] [SDGT]
LATINA DE COSMETICOS Y DISTRIBUCIONES S.A., Carrera 28 No. 11–65 of. 712, Bogota, Colombia; Calle 12B No. 27–39, Bogota, Colombia; Carrera 70 No. 54–30, Bogota, Colombia; NIT # 830018857–5 (Colombia) [SDNT]
LATINOAMERICANA DE FARMACOS S.A. (a.k.a. FARMACIA ALMACEN POPULAR; a.k.a. FARMACIA AMAZONAS; a.k.a. FARMACIA ATENEA; a.k.a. FARMACIA CAROLINA 2; a.k.a. FARMACIA CHACON; a.k.a. FARMACIA DEL PUEBLO; a.k.a. FARMACIA DORAL; a.k.a. FARMACIA ECONOMICA; a.k.a. FARMACIA INMACULADA; a.k.a. FARMACIA JARDIN DEL SUR; a.k.a. FARMACIA JARDIN SUR; a.k.a. FARMACIA LA COLINA; a.k.a. FARMACIA LA ECONOMICA; a.k.a. FARMACIA LA MODERNA; a.k.a. FARMACIA LOS SAUCES; a.k.a. FARMACIA MODERNA; a.k.a. FARMACIA PROBETA; a.k.a. FARMACIA PROVIDA; a.k.a. FARMACIA SAN MIGUEL; a.k.a. FARMACIA SAN VICENTE; a.k.a. LATINFARMACOS S.A.; a.k.a. SUPERFARMACIA), Av. Rodrigo de Chavez 387, Quito, Ecuador; Cayambe, Ecuador; Av. Amazonas 244 y Jorge Washington, Quito, Ecuador; El Carmen, Ecuador; Ambato, Ecuador; Av. Amazonas 1134 y General Foch, Quito, Ecuador; Av. 10 de Agosto 2753 y Gral. Vicente Aguirre, Edificio Freile Ardiani, Quito, Ecuador; Quito, Ecuador; Gualberto Perez 633 y Andres Perez, Quito, Ecuador; Michelena y Mariscal Sucre, Quito, Ecuador; Tres de Julio y Cuenca, Santo Domingo, Ecuador; Tulcan, Ecuador; Santo Domingo Colorados, Ecuador; RUC # 1791286812001 (Ecuador) [SDNT]
LAURA I (f.k.a. LAURA) (vessel) [CUBA]
LAVADERO EL CASTILLO, Carrera 84 No. 32B–40, Medellin, Colombia [SDNT]
LAVERDE GOMEZ, German, c/o CONSTRUCTORA ALTOS DEL RETIRO LTDA., Bogota, Colombia; DOB 20 Apr 1956; Cedula No. 79140380 (Colombia) (individual) [SDNT]
LAVILLA, Ruben Pestano, Jr. (a.k.a. DE LAVILLA, Mike; a.k.a. LABELLA, Omar; a.k.a. LAVILLA, Mile D.; a.k.a. LAVILLA, Omar; a.k.a. LAVILLA, Ramo; a.k.a. LAVILLA, Reuben; a.k.a. LAVILLA, Reuben Omar; a.k.a. LAVILLA, Reymund; a.k.a. LOBILLA, Shaykh Omar; a.k.a. MUDDARIS, Abdullah; a.k.a. SHARIEF, Ahmad Omar), Sitio Banga Maiti, Barangay Tranghawan, Lambunao, Iloilo Province, Philippines; 10th Avenue, Caloocan City, Manila, Philippines; DOB 4 Oct 1972; POB Sitio Banga Maiti, Barangay Tranghawan, Lambunao, Iloilo Province, Philippines; nationality Philippines (individual) [SDGT]
LAW, Steven (a.k.a. CHUNG, Lo Ping; a.k.a. HALIM, Abdul; a.k.a. LAW, Stephen; a.k.a. LO, Ping Han; a.k.a. LO, Ping Hau; a.k.a. LO, Ping Zhong; a.k.a. LO, Steven; a.k.a. NAING, Htun Myint; a.k.a. NAING, Tun Myint; a.k.a. NAING, U Myint), 330 Strand Rd., Latha Township, Rangoon, Burma; 61–

62 Bahosi Development Housing, Wadan St., Lanmadaw Township, Rangoon, Burma; No. 124 Insein Road, Ward (9), Hlaing Township, Rangoon, Burma; 8A Jalan Teliti, Singapore, Singapore; 3 Shenton Way, #10–01 Shenton House, Singapore 068805, Singapore; DOB 16 May 1958; alt. DOB 27 Aug 1960; POB Lashio, Burma; citizen Burma; Passport 937174 (Burma) (individual) [BURMA]

LAZAREVIC, Vladimir; DOB 23 Mar 1949; POB Gricar (individual) [BALKANS]

LEAL FLOREZ, Luis Alejandro, LATINA DE COSMETICOS Y DISTRIBUCIONES S.A., Bogota, Colombia; c/o COINTERCOS S.A., Bogota, Colombia; COSMEPOP, Bogota, Colombia; c/o FIDUSER LTDA., Bogota, Colombia; c/o DISTRIBUIDORA DE DROGAS CONDOR S.A., Bogota, Colombia; DOB 12 Sep 1961; Cedula No. 7217432 (Colombia); Passport 7217432 (Colombia) (individual) [SDNT]

LEAL GARCIA, Ignacio (a.k.a. ''CAMILO''; a.k.a. ''TUERTO''); citizen Colombia; nationality Colombia; Cedula No. 96186610 (Colombia) (individual) [SDNTK]

LEAL HERNANDEZ, Mauricio, c/o INCOMMERCE S.A., Cali, Colombia; DOB 24 Nov 1974; Cedula No. 94429420 (Colombia); Passport 94429420 (Colombia) (individual) [SDNT]

LEAL LOPEZ, Janey Farides, c/o VERANILLO DIVE CENTER LTDA., Barranquilla, Colombia; c/o MARTIN HODWALKER M. Y CIA. S. EN C., Barranquilla, Colombia; DOB 6 Nov 1972; POB Colombia; Cedula No. 32779104 (Colombia); Passport AF665724 (Colombia) (individual) [SDNT]

LEAL RODRIGUEZ, Jose Guillermo, c/o LABORATORIOS KRESSFOR DE COLOMBIA S.A., Bogota, Colombia; c/o DECAFARMA S.A., Bogota, Colombia; c/o PENTACOOP LTDA., Bogota, Colombia; c/o PENTA PHARMA DE COLOMBIA S.A., Bogota, Colombia; DOB 1 Mar 1932; Cedula No. 89867 (Colombia) (individual) [SDNT]

LEATHER INDUSTRIES CORPORATION (a.k.a. LEATHER INDUSTRIES TANNERIES), P.O. Box 1639, Khartoum, Sudan [SUDAN]

LEBANESE MEDIA GROUP (a.k.a. LEBANESE COMMUNICATION GROUP), Al Manar Building, Ahmad Kassir Street, Haret Hriek, Baabda, Lebanon; Abed Al Nour Street, Haret Hriek, PO Box 354/25, Beirut, Lebanon; Company ID: No. 59 531 at Commercial Registry of the Civil Court of First Instance at Baabda, Lebanon [SDGT]

LEBREDO, Jose A., Zweierstrasse 35, CH–8022 Zurich, Switzerland; Director, Banco Nacional de Cuba (individual) [CUBA]

LEILABADI, Ali Hajinia (a.k.a. LAILABADI, ALI HADJINIA), c/o MESBAH ENERGY COMPANY, Iran; DOB 19 Feb 1950; POB Tabriz, Iran; citizen Iran; nationality Iran; Passport E4710151 (Iran) issued 15 Oct 2000 expires 15 Oct 2005 (individual) [NPWMD]

LEMOFAR LTDA. (a.k.a. LMF LTDA.), Calle 39 Bis A No. 27–12, Bogota, Colombia; NIT # 830116405–1 (Colombia) [SDNT]

LEON REYES, German, c/o COLPHAR S.A., Bogota, Colombia; Cedula No. 79273729 (Colombia); Passport 79273729 (Colombia) (individual) [SDNT]

LEON, Hector, c/o MANUFACTURAS REAL S.A., Bogota, Colombia; DOB 29 Jan 1954; POB Viota, Cundinamarca, Colombia; Cedula No. 19251100 (Colombia); Passport P026720 (Colombia) (individual) [SDNT]

LERCH, Gotthard, Kreuzbergstrasse 4, 9472 Grabs, St Gallen Canton, Switzerland; DOB 21 Dec 1942; POB Germany; nationality Germany; Passport 3545767791D (Germany) issued 7 Aug 1998 expires 6 Aug 2008; alt. Passport 3545767791 (Germany) (individual) [NPWMD]

LESABE, Thenjiwe; DOB 5 Jan 1933; Politburo Committee Member (individual) [ZIMBABWE]

LESMES BULLA, Jairo Alfonso (a.k.a. CALDERON, Javier), Colombia; DOB 25 Mar 1947; citizen Colombia; Cedula No. 17164408 (Colombia); International FARC Commission Member for Argentina, Chile, Uruguay, and Paraguay (individual) [SDNTK]

LEVERAGE, S.A., San Martin 323, Piso 14, Buenos Aires, Argentina [CUBA]

LEVERYE, S.A., Corrientes 1386, 5th Floor, Buenos Aires, Argentina [CUBA]

LEYBDA CORPORATION, S.A., Panama [CUBA]

LI, Cheng Yu (a.k.a. BOONTHAWEE, Sae Jang; a.k.a. BUNTHAWEE, Sae Chang; a.k.a. BUNTHAWEE, Sae Jang; a.k.a. ''AH LI KO''; a.k.a. ''LI CHENG YU''), 725, Mu 10, Tambon Nong Bua, Amphur Chaiprakan, Chiang Mai, Thailand; 199/132, Mu 8, Tambon Non Jom, Amphur San Sai, Chiang Mai, Thailand; Shan, Burma; DOB 06 Jun 1961; National ID No. 5502100007251 (Thailand); Passport X638456 (Thailand) (individual) [SDNTK]

LI, Fangwei (a.k.a. LEE, Karl), c/o LIMMT ECONOMIC AND TRADE COMPANY, LTD., 2501–2508 Yuexiu Mansion, No. 82 Xinkai Road, Dalian, Liaoning 116011, China; China; DOB 18 Sep 1972; nationality China (individual) [NPWMD]

LI, Kai Shou (a.k.a. ''LI KAI SHOU''), Huay Aw, Shan, Burma; DOB 1949 (individual) [SDNTK]

LIBERATION ARMY OF PRESEVO, MEDVEDJA, AND BUJANOVAC (a.k.a. UCPMB) [BALKANS]

LIBERATION TIGERS OF TAMIL EELAM (a.k.a. ELLALAN FORCE; a.k.a. LTTE; a.k.a. TAMIL TIGERS) [FTO] [SDGT]

LIBREROS DIEZ, Orlando, c/o CONSTRUCTORA DIMISA LTDA., Cali, Colombia; c/o VALLE COMUNICACIONES LTDA., Cali, Colombia; c/o INDUSTRIA AVICOLA PALMASECA S.A., Cali, Colombia; c/o DISTRIBUIDORA DE ELEMENTOS PARA LA CONSTRUCCION S.A., Cali, Colombia; DOB 6 Dec 1960; Cedula No. 16651068 (Colombia) (individual) [SDNT]

LIBYAN ISLAMIC FIGHTING GROUP [FTO] [SDGT]

LICON MUNOZ, Jorge Arturo, c/o CORRALES SAN IGNACIO S.P.R. DE R.L. DE C.V., Saucillo, Chihuahua, Mexico; Mexico; c/o CORRALES SAN IGNACIO L.L.C., Presidio, TX; DOB 17 May 1974; citizen Mexico; nationality Mexico; C.U.R.P. LIMJ740517HCHCXR09 (Mexico); Immigration No. A7800002 Border Crossing (United States) (individual) [SDNTK]

LICOREXPORT S.A., Quito, Ecuador [CUBA]

LILAC ISLANDS (vessel) [CUBA]

LIMAJ, Fatmir; DOB 4 Feb 1971; POB Banja, Serbia and Montenegro; ICTY indictee (individual) [BALKANS]

LIMMT ECONOMIC AND TRADE COMPANY, LTD. (a.k.a. ANSI METALLURGY INDUSTRY CO. LTD.; a.k.a. BLUE SKY INDUSTRY CORPORATION; a.k.a. DALIAN CARBON CO. LTD.; a.k.a. DALIAN SUNNY INDUSTRY & TRADE CO., LTD.; a.k.a. LIAONING INDUSTRY & TRADE CO., LTD.; a.k.a. LIMMT (DALIAN FTZ) METALLURGY AND MINERALS CO., LTD.; a.k.a. LIMMT (DALIAN FTZ) MINMETALS AND METALLURGY CO., LTD.; a.k.a. LIMMT (DALIAN) METALLURGY AND MINERALS CO., LTD.; a.k.a. SC (DALIAN) INDUSTRY & TRADE CO., LTD.; a.k.a. SINO METALLURGY & MINMETALS INDUSTRY CO., LTD.; a.k.a. WEALTHY OCEAN ENTERPRISES LTD.), No. 08 F25, Yuexiu Mansion, Xigang District, Dalian, China; No. 10 Zhongshan Road, Dalian, China; No. 100 Zhongshan Road, Dalian, China; 2501–2508 Yuexiu Mansion, No. 82 Xinkai Road, Dalian, Liaoning 116011, China; and all other locations worldwide [NPWMD]

LIN, Aung Thein (a.k.a. ''LYNN, Aung Thein''), Burma; DOB 1952; citizen Burma; nationality Burma; Brigadier General, Mayor and Chairman of Yangon City (Rangoon) City Development Committee (individual) [BURMA]

LINARES GUZMAN, Juan Carlos, c/o TRIMARK LTDA., Bogota, Colombia; Carrera 6B No. 33B–80, Barranquilla, Colombia; c/o CAJA SOLIDARIA, Bogota, Colombia; c/o COPSERVIR LTDA., Bogota, Colombia; c/o LITOPHARMA, Barranquilla, Colombia; Cedula No. 72185736 (Colombia) (individual) [SDNT]

LINARES REYES, Ricardo Jose (a.k.a. LLENARES REYES, Jose Ricardo), c/o ADMINISTRACION INMOBILIARIA BOLIVAR S.A., Cali, Colombia; c/o INVERSIONES BETANIA LTDA., Cali, Colombia; c/o CONCRETOS CALI S.A., Cali, Colombia; c/o W. HERRERA Y CIA. S. EN C., Cali, Colombia; c/o INVERSIONES EL PENON S.A., Cali, Colombia; c/o INVHERESA S.A., Cali, Colombia; c/o CONSTRUEXITO S.A., Cali, Colombia; c/o VIAJES MERCURIO LTDA, Cali, Colombia; c/o INVERSIONES INVERVALLE S.A., Cali, Colombia; c/o INCOVALLE, Cali, Colombia; c/o INVERSIONES HERREBE LTDA., Cali, Colombia; DOB 8 Mar 1955; alt. DOB 3 Mar 1955; Cedula No. 14440139 (Colombia); Passport PO466638 (Colombia) (individual) [SDNT]

LINDO HURTADO, Edgar, c/o INMOBILIARIA U.M.V. S.A., Cali, Colombia; DOB 23 Mar 1927; Cedula No. 6061717 (Colombia) (individual) [SDNT]

LISANDRO LASCARRO, Jose (a.k.a. MUNOZ LASCARRO, Felix Antonio; a.k.a. ''PASTOR ALAPE''); DOB 4 Jun 1959; alt. DOB 1946; POB Puerto Berrio, Antioquia, Colombia; Cedula No. 3550075 (Colombia); alt. Cedula No. 71180715 (Colombia) (individual) [SDNTK]

LITOPHARMA (a.k.a. COOPERATIVA MULTIACTIVA DEL LITORAL), Calle 72 No. 48–60 Local 1B, Barranquilla, Colombia; Calle 72 No. 48–60 Local 1A Centro Ejecutivo Kathand, Barranquilla, Colombia; Carrera 3 Sur No. 43–62, Barranquilla, Colombia; NIT # 802012669–8 (Colombia) [SDNT]

LITTLE CONNEMARA 1 FARM, Nyanga, Zimbabwe [ZIMBABWE]

LIZZY MUNDO INTERIOR, Justo Sierra 1963, Guadalajara, Jalisco, Mexico [SDNT]

LJUBICIC, Pasko; DOB 15 Nov 1965; POB Nezirovic, Bosnia-Herzegovina; ICTY indictee (individual) [BALKANS]

LLADROVICI, Ramiz; DOB 3 Jan 1966 (individual) [BALKANS]

LO, Hsing Han (a.k.a. LAW, Hsit-han; a.k.a. LO, Hsin Han; a.k.a. LO, Hsing-han), 126A Damazedi Rd, Bahan Township, Rangoon, Burma; 47 Latha St., Latha Township, Rangoon, Burma; 20B Massoeyein St., 9 Mile, Rangoon, Burma, Burma; 36 19th St., Lower Blk, Latha Township, Rangoon, Burma; 330 Strand Rd, Latha Township, Rangoon, Burma; 60–61 Strand Rd., Latha Township, Rangoon, Burma; 152 Sule Pagoda Rd, Rangoon, Burma; 20–23 Masoeyein Kyang St., Mayangone, Rangoon, Burma; 20 Wingabar Rd, Rangoon, Burma; DOB 1938; alt. DOB 1935 (individual) [BURMA]

LOAN, Waseem Rauf (a.k.a. BUTT, Abdul Majid; a.k.a. LOAN, Waseem Raouf; a.k.a. LON RAOUF, Wasim Raouf; a.k.a. LOUN, Waseem Raouf; a.k.a. LOUN, Waseem Rauf; a.k.a. LOUN, Waseem Rouf; a.k.a. RASHI, Abdul Majid; a.k.a. RASHID, Abdul Majid), c/o AL AMLOOD TRADING LLC, Dubai, United Arab Emirates; c/o FMF GENERAL TRADING LLC, Dubai, United Arab Emirates; Pakistan; DOB 03 Mar 1966; POB Lahore, Pakistan; citizen Pakistan; Identification Number 35200–5407888–5 (Pakistan); Passport AA8908881 (Pakistan) (individual) [SDNTK]

LOBATO, Julio (a.k.a. PRADO, Julio), Panama (individual) [CUBA]

LOCHINVAR FARM, Mashvingo, Zimbabwe [ZIMBABWE]

LOGAN MOREY, Elvis Angus (a.k.a. ''BURTON BURGESS''); DOB 28 Jul 1963; POB Toledo District, Belize; Passport P0017003 (Belize); SSN 561–77–9011 (United States) (individual) [SDNT]

LOGARCHEO S.A. (f.k.a. LOGARCHEO AG), Chemin du Carmel, 1661 Le Paquier-Montbarry, Switzerland; US FEIN CH–217–0–431–423–3 (United States) [IRAQ2]

LOMEDIC, S.A. DE C.V. (a.k.a. MEDIC EXPRESS, S.A. DE C.V.), Av. del Parque #489, Col. San Andres, Guadalajara, Jalisco 44810, Mexico; R.F.C. LOM–990211-KQ2 (Mexico) [SDNTK]

LOMELI BOLANOS, Carlos, c/o LOMEDIC, S.A. DE C.V., Guadalajara, Jalisco, Mexico; DOB 05 Aug 1959; POB Guadalajara, Mexico; citizen Mexico; nationality Mexico; C.U.R.P. LOBC590805HJCMLR02 (Mexico) (individual) [SDNTK]

LONDONO ALVAREZ, Gloria Elena (a.k.a. LONDONO DE GRAJALES, Gloria Elena), c/o CITICAR LTDA., La Union, Valle, Colombia; c/o MELON LTDA., Cali, Colombia; c/o GBS TRADING S.A., Cali, Colombia; c/o GAD S.A., La Union, Valle, Colombia; c/o HOTEL LOS VINEDOS, La Union, Valle, Colombia; c/o INTERNATIONAL FREEZE DRIED S.A., Bogota, Colombia; c/o JOSAFAT S.A., Tulua, Valle, Colombia; c/o WORLD WORKING COMERCIALIZADORA INTERNACIONAL S.A., Cali, Colombia; c/o CRETA S.A., La Union, Valle, Colombia; c/o SALIM S.A., La Union, Valle, Colombia; c/o FRUTAS DE LA COSTA S.A., Malambo, Atlantico, Colombia; c/o HEBRON S.A., Tulua, Valle, Colombia; c/o ARMAGEDON S.A., La Union, Valle, Colombia; c/o TRANSPORTES DEL ESPIRITU SANTO S.A., La Union, Valle, Colombia; c/o CONFECCIONES LINA MARIA LTDA., La Union, Valle, Colombia; c/o INDUSTRIAS DEL ESPIRITU SANTO S.A., Malambo, Atlantico, Colombia; DOB 22 Apr 1962; POB Medellin, Colombia; Cedula No. 51635146 (Colombia) (individual) [SDNT]

LONDONO DE UPEGUI, Maria del Carmen, c/o INVERSIONES VILLA PAZ S.A., Cali, Colombia; DOB 16 Oct 1927; Cedula No. 29652262 (Colombia) (individual) [SDNT]

LONDONO ECHEVERRY, Rodrigo (a.k.a. ''TIMOCHENKO''; a.k.a. ''TIMOLEON JIMENEZ''); DOB 22 Jan 1959; alt. DOB 1 Jan 1949; POB Calarca, Quindio, Colombia; Cedula No. 79149126 (Colombia) (individual) [SDNTK]

LONDONO VASQUEZ, Marco Julio, Carrera 63B No. 42–50, Medellin, Colombia; c/o INVERSIONES EL MOMENTO S.A., Medellin, Colombia; c/o CASA DEL GANADERO S.A., Medellin, Colombia; c/o ADMINISTRADORA GANADERA EL 45 LTDA., Medellin, Colombia; c/o SOCIEDAD MINERA GRIFOS S.A., El Bagre, Antioquia, Colombia; DOB 04 Dec 1955; POB Fredonia, Antioquia, Colombia; Cedula No. 15345634 (Colombia); Passport AG062408 (Colombia) (individual) [SDNT]

LONDONO VELEZ, Roberto, Calle 19 No. 12–49, Apt. 504, Armenia, Quindio, Colombia; Calle 13 No. 101–50, Armenia, Quindio, Colombia; c/o ASESORIAS PROFESIONALES LTDA., Armenia, Colombia; DOB 17 Dec 1958; POB Cali, Colombia; alt. POB Armenia, Quindio, Colombia; citizen Colombia; Cedula No. 7527342 (Colombia); Passport AI520011 (Colombia) (individual) [SDNT]

LONGWOOD FARM, Zimbabwe [ZIMBABWE]

LOPERA BARBOSA, Adriana, c/o J.A.J. BARBOSA Y CIA. S.C.S., Cali, Colombia; Calle 1A No. 60–61 apto. 205B, Cali, Colombia; c/o INVERSIONES EPOCA S.A., Cali, Colombia; c/o CONSULTORIA INTEGRAL Y ASESORIA EMPRESARIAL S.A., Cali, Colombia; c/o ASESORIA Y SOLUCIONES GRUPO CONSULTOR S.A., Cali, Colombia; DOB 21 Jun 1965; POB Cali, Colombia; Cedula No. 31930002 (Colombia); Passport AG820191 (Colombia) (individual) [SDNT]

LOPERA BARBOSA, Jairo Humberto, Carrera 72 No. 11–46 Blq. 11 apto. 403, Cali, Colombia; c/o INVERSIONES EPOCA S.A., Cali, Colombia; c/o CONSULTORIA INTEGRAL Y ASESORIA EMPRESARIAL S.A., Cali, Colombia; c/o J.A.J. BARBOSA Y CIA. S.C.S., Cali, Colombia; c/o ASESORIA Y SOLUCIONES GRUPO CONSULTOR S.A., Cali, Colombia; DOB 22 Feb 1971; POB Cali, Colombia; Cedula No. 16792756 (Colombia); Passport AJ172334 (Colombia) (individual) [SDNT]

LOPERA BARBOSA, Juan Carlos, c/o ASESORIA Y SOLUCIONES GRUPO CONSULTOR S.A., Cali, Colombia; Carrera 81 No. 13A–125 Casa 11, Cali, Colombia; c/o INVERSIONES EPOCA S.A., Cali, Colombia; c/o CONSULTORIA INTEGRAL Y ASESORIA EMPRESARIAL S.A., Cali, Colombia; c/o J.A.J. BARBOSA Y CIA. S.C.S., Cali, Colombia; DOB 18 Jan 1968; POB Cali, Colombia; Cedula No. 16746731 (Colombia); Passport AK122874 (Colombia) (individual) [SDNT]

LOPERA LONDONO, Vicente de Jesus, c/o INVERSIONES Y CONSTRUCCIONES VALLE S.A., Calle, Colombia; Cedula No. 1393107 (Colombia) (individual) [SDNT]

LOPEZ ARANGO, Gloria Ines (a.k.a. LOPEZ DE OSPINA, Gloria Ines), c/o DISTRIBUIDORA MIGIL CALI S.A., Cali, Colombia; c/o GENERAL DE NEGOCIOS Y ADMINISTRACION LTDA., Cali, Colombia; Carrera 1K No. 60–71, Cali, Colombia; c/o INMOBILIARIA IMTASA LTDA., Cali, Colombia; DOB 18 Mar 1952; Cedula No. 31237563 (Colombia) (individual) [SDNT]

LOPEZ DIAZ, Jesus Alfonso, c/o ESTABLO PUERTO RICO S.A. DE C.V., Culiacan, Sinaloa, Mexico; Avenida Const. Pedro L Zavala 1957, Colonia Libertad, Culiacan, Sinaloa 80180, Mexico; DOB 30 Sep 1962; POB Sinaloa, Mexico; citizen Mexico; nationality Mexico; C.U.R.P. LODJ620930HSLPZS09 (Mexico); R.F.C. LODJ–620930 (Mexico) (individual) [SDNTK]

LOPEZ MENDEZ, Luis Eduardo (a.k.a. LOPEZ MENDEZ, Alfonso; a.k.a. ''EFREN ARBOLEDA''); citizen Colombia; nationality Colombia; Cedula No. 96329889 (Colombia) (individual) [SDNTK]

LOPEZ PALACIOS, Liliana (a.k.a. LUCIA MARIN, Olga), Colombia; DOB 21 Sep 1961; citizen Colombia; Cedula No. 51708175 (Colombia); International FARC Commission Member for Mexico (individual) [SDNTK]

LOPEZ PENA, Julio Cesar (a.k.a. ''COMBA''; a.k.a. ''JULITO''), Carrera 72 No. 10 bis 21, Apt. 303, Cali, Colombia; Carrera 71 No. 10 Bis 103, Cali, Colombia; Carrera 16 No. 21N–02, Armenia, Colombia; Avenida 4O No. 6–140, Apt. 1301, Cali, Colombia; Calle 62 No. 4C–18, Cali, Colombia; DOB 25 Jun 1961; POB Chaparral, Tolima, Colombia; citizen Colombia; Cedula No. 16655942 (Colombia) (individual) [SDNT]

LOPEZ POBLANO, Beatriz Raquel (a.k.a. LOPEZ POBLANO DE ARRIOLA, Beatriz Raquel; a.k.a. LOPEZ PORTILLO, Beatriz Raquel), c/o CHIHUAHUA FOODS S.A. DE C.V., Cuauhtemoc, Mexico; c/o INMOBILIARIA EL PRESON S.A. DE C.V., Chihuahua, Mexico; c/o INDIO VITORIO S. DE P.R. DE R.L. DE C.V., Saucillo, Mexico; Calle Sierra San Diego No. 2502, Chihuahua, Chihuahua, Mexico; DOB 11 Apr 1968; alt. DOB 11 Apr 1971; POB Delicias, Chihuahua, Mexico; citizen Mexico; nationality Mexico (individual) [SDNTK]

LOPEZ RODRIGUEZ, Cecilia, c/o COMERCIALIZADORA INTERNACIONAL

VALLE DE ORO S.A., Cali, Colombia; DOB 4 Jul 1965; Cedula No. 31171066 (Colombia) (individual) [SDNT]

LOPEZ SANDOVAL, Fernando Alberto, c/o FARMACOOP, Bogota, Colombia; c/o DISTRIBUIDORA SANAR DE COLOMBIA S.A., Cali, Colombia; c/o DISTRIEXPORT S.A., Bogota, Colombia; c/o INCOMMERCE S.A., Cali, Colombia; DOB 12 Oct 1975; Cedula No. 94450287 (Colombia); Passport 94450287 (Colombia) (individual) [SDNT]

LOPEZ URREA, Adriana Patricia, c/o COLPHAR S.A., Bogota, Colombia; DOB 29 Feb 1968; Cedula No. 36378461 (Colombia); Passport 36378461 (Colombia) (individual) [SDNT]

LOPEZ VALENCIA, Oscar Alberto, c/o MEGAPLAST S.A., Palmira, Valle, Colombia; Carrera 6A No. 11–43 501–2, Cali, Colombia; c/o PLASTICOS CONDOR LTDA., Cali, Colombia; c/o FLEXOEMPAQUES LTDA., Cali, Colombia; DOB 30 Aug 1960; Cedula No. 10537943 (Colombia) (individual) [SDNT]

LOPEZ ZAPATA, Hernan de Jesus, c/o AGROPECUARIA LA ROBLEDA S.A., Cali, Colombia; c/o INDUSTRIA MADERERA ARCA LTDA., Cali, Colombia; Cedula No. 16344058 (Colombia) (individual) [SDNT]

LOPEZ, Miguel, A., 20 Ironmonger Lane, London EC2V 8EY, United Kingdom; Deputy Chairman, Havana International Bank (individual) [CUBA]

LOPEZ, Quirino Gutierrez, c/o ANGLO CARIBBEAN SHIPPING CO., LTD., 7th Floor, Ibex House, the Minories, London EC3N 1DY, United Kingdom (individual) [CUBA]

LOPRETTO DURAN, Jorge Enrique, Carrera 4 No. 12–20 of. 206, Cartago, Valle, Colombia; c/o VISCAYA LTDA., Cartago, Valle, Colombia; c/o INMOBILIARIA PASADENA LTDA., Cartago, Valle, Colombia; c/o INMOBILIARIA EL ESCORIAL LTDA., Cartago, Valle, Colombia; c/o INMOBILIARIA LINARES LTDA., Cartago, Valle, Colombia; DOB 8 Aug 1962; Cedula No. 16215409 (Colombia); Passport 16215409 (Colombia) (individual) [SDNT]

LOS GNOMOS LTDA., Calle 5 No. 61–82, Apt. 412B, Cali, Valle, Colombia; NIT # 800165614–2 (Colombia) [SDNTK]

LOS VINEDOS DE GETSEMANI S.A. (a.k.a. HOTEL LOS VINEDOS; a.k.a. VALLE LINDO HOSTAL RESTAURANTE), Troncal Del Pacifico Km. 1, La Union, Valle, Colombia; Km. 1 Via a Roldanillo, La Union, Valle, Colombia; NIT # 800108902–6 (Colombia) [SDNT]

LOS ZETAS, Mexico [SDNTK]

LOT 3A OF DETE VALLEY FARM, Lupane, Zimbabwe [ZIMBABWE]

LOTHAIN FARM, Gutu, Zimbabwe [ZIMBABWE]

LOTUS ISLANDS (vessel) [CUBA]

LOUBIRI, Habib Ben Ahmed (a.k.a. AL-LOUBIRI, Habib Ben Ahmed), via Brughiera, n. 5, Castronno, Varese, Italy; DOB 17 Nov 1961; POB Menzel Temime, Tunisia; nationality Tunisia; Italian Fiscal Code LBRHBB61S17Z352F; Passport M 788439 issued 20 Oct 2001 expires 19 Oct 2006 (individual) [SDGT]

LOUNICI, Djamel; DOB 1 Feb 1962; POB Algiers, Algeria (individual) [SDGT]

LOUTH HOLDINGS, S.A., Panama [CUBA]

LOYALIST VOLUNTEER FORCE (LVF), United Kingdom [SDGT]

LOZANO ESCOBAR, Enrique Alejandro, c/o GRANJA LA SIERRA LTDA., Cali, Colombia; DOB 5 Aug 1961; POB Cali, Valle, Colombia; Cedula No. 16657902 (Colombia); Passport 16657902 (Colombia) (individual) [SDNT]

LOZANO OSPINA, Max Abilio, c/o CONSTRUCTORA AMERICA S.A., Bogota, Colombia; c/o DURATEX S.A., Bogota, Colombia; c/o C.I. OTILIA FLOWERS S.A., Cajica, Cundinamarca, Colombia; c/o PROMOCIONES E INVERSIONES LAS PALMAS S.A., Bogota, Colombia; DOB 23 May 1971; POB Colombia; Cedula No. 79248772 (Colombia) (individual) [SDNT]

LUCERO DE MARTINEZ, Sandra (a.k.a. LUCERO VALENZUELA, Sandra; a.k.a. VALENCIA ZAZUETA, Sandra; a.k.a. VALENZUELA, Sandra), Mexico; DOB 29 Oct 1969; POB Nogales, Sonora, Mexico; citizen Mexico; nationality Mexico; C.U.R.P. VAZS691029MSRLZN04 (Mexico); alt. C.U.R.P. VAZS691029HSRLZN04 (Mexico) (individual) [SDNTK]

LUCERO IMPORT S.A.C., Calle Soledad 113, Interior 301, Lima, Peru; RUC # 20432287221 (Peru) [SDNTK]

LUCKY LILY (a.k.a. IRAN LUCKY LILY); Vessel Registration Identification IMO 9165827 (vessel) [NPWMD]

LUCKY MAN (a.k.a. IRAN LUCKY MAN); Vessel Registration Identification IMO 9165839 (vessel) [NPWMD]

LUGO PALACIOS, Julian Alberto, c/o COOPERATIVA MERCANTIL COLOMBIANA COOMERCOL, Cali, Colombia; c/o COPSERVIR LTDA., Bogota, Colombia; DOB 8 Aug 1972; Cedula No. 94381586 (Colombia); Passport 94381586 (Colombia) (individual) [SDNT]

LUKASHENKA, Alyaksandr Hryhoryavich (a.k.a. LUKASHENKA, Aleksandr Grigorievich; a.k.a. LUKASHENKA, Aleksandr Grigoriyevich; a.k.a. LUKASHENKA, Aleksandr Hryhoryavich; a.k.a. LUKASHENKA, Aleksandr Ryhoravich; a.k.a. LUKASHENKA, Alexander Grigorievich; a.k.a. LUKASHENKA, Alexander Grigoriyevich; a.k.a. LUKASHENKA, Alexander Hryhoryavich; a.k.a. LUKASHENKA, Alexander Ryhoravich; a.k.a. LUKASHENKA, Aliaksandr Grigorievich; a.k.a. LUKASHENKA, Aliaksandr Grigoriyevich; a.k.a. LUKASHENKA, Aliaksandr Hryhoryavich; a.k.a. LUKASHENKA, Aliaksandr Ryhoravich; a.k.a. LUKASHENKA, Alyaksandr Grigorievich; a.k.a. LUKASHENKA, Alyaksandr Grigoriyevich; a.k.a. LUKASHENKA, Alyaksandr Ryhoravich; a.k.a. LUKASHENKO, Aleksandr Grigorievich; a.k.a. LUKASHENKO, Aleksandr Grigoriyevich; a.k.a. LUKASHENKO, Aleksandr Hryhoryavich; a.k.a. LUKASHENKO, Aleksandr Ryhoravich; a.k.a. LUKASHENKO, Alexander Grigorievich; a.k.a. LUKASHENKO, Alexander Grigoriyevich; a.k.a. LUKASHENKO, Alexander Hryhoryavich; a.k.a. LUKASHENKO, Alexander Ryhoravich; a.k.a. LUKASHENKO, Aliaksandr Grigorievich; a.k.a. LUKASHENKO, Aliaksandr Grigoriyevich; a.k.a. LUKASHENKO, Aliaksandr Hryhoryavich; a.k.a. LUKASHENKO, Aliaksandr Ryhoravich; a.k.a. LUKASHENKO, Alyaksandr Grigorievich; a.k.a. LUKASHENKO, Alyaksandr Grigoriyevich; a.k.a. LUKASHENKO, Alyaksandr Hryhoryavich; a.k.a. LUKASHENKO, Alyaksandr Ryhoravich); DOB 30 Aug 1954; POB Kopys, Vitebsk oblast, Belarus; President (individual) [BELARUS]

LUKASHENKA, Viktar Aliaksandravich (a.k.a. LUKASHENKA, Victor Aliaksandravich; a.k.a. LUKASHENKA, Viktor Aliaksandravich; a.k.a. LUKASHENKO, Victor Aliaksandravich; a.k.a. LUKASHENKO, Viktar Aliaksandravich; a.k.a. LUKASHENKO, Viktor Aliaksandravich); DOB 1976; POB Mogilev, Belarus; Head of Presidential Guard; Also identified as National Security Advisor (individual) [BELARUS]

LUKIC, Milan; DOB 6 Sep 1967; POB Foca, Bosnia-Herzegovina; ICTY indictee at large (individual) [BALKANS]

LUKIC, Sredoje; DOB 5 Apr 1961; POB Visegrad, Bosnia-Herzegovina; ICTY indictee at large (individual) [BALKANS]

LUKIC, Sreten; DOB 28 Mar 1955; POB Visegrad municipality, Bosnia and Herzegovina (individual) [BALKANS]

LUKOVIC, Milorad Ulemek 'Legija'; DOB 15 Mar 1968; POB Belgrade, Serbia and Montenegro (individual) [BALKANS]

LUNA CORDOBA, Rosa Edelmira, c/o SOCIEDAD MINERA GRIFOS S.A., El Bagre, Antioquia, Colombia; c/o INVERSIONES EL MOMENTO S.A., Medellin, Colombia; c/o CASA DEL GANADERO S.A., Medellin, Colombia; 13315 SW 128 Passage, Miami, FL 33186; Carrera 42 No. 34–15, Medellin, Colombia; Calle 10E No. 25–41, Medellin, Colombia; c/o GANADERIA LUNA HERMANOS LTDA., Medellin, Colombia; c/o ELECTROMUEBLES DEL BAJO CAUCA, Medellin, Colombia; c/o ADMINISTRADORA GANADERA EL 45 LTDA., Medellin, Colombia; 801 Brickell Key Blvd., unit 1907, Miami, FL 33131; c/o INVERSIONES LICOM LTDA., Medellin, Colombia; DOB 18 Sep 1960; POB Puerto Asis, Putumayo, Colombia; Cedula No. 41101742 (Colombia); Passport AK031225 (Colombia) (individual) [SDNT]

LUSHTAKU, Sami; DOB 20 Feb 1961; POB Srbica, Serbia and Montenegro (individual) [BALKANS]

LUZ MERY TRISTAN E.U. (a.k.a. CLUB DEPORTIVO LUZ MERY TRISTAN WORLD CLASS; a.k.a. LUZ MERY TRISTAN WORLD CLASS), Carrera 125 No. 19–275, Cali, Colombia; Diagonal 32 No. 37–125, Cali, Colombia; Holguines Trade Center L–239, Cali, Colombia; Calle 5B 4 No. 37–125, Cali, Colombia; Avenida 6 Norte No. 17–92 Apt. 508, Cali, Colombia; NIT # 805449310–7 (Colombia); alt. NIT # 805012268–9 (Colombia) [SDNT]

LWIN, Saw, Burma; DOB 1939; citizen Burma; nationality Burma; Major General, Minister of Industry 2 (individual) [BURMA]

M & S SYNDICATE (PVT) LTD., P.O. Box 1275, Harare, Zimbabwe; First Floor,

Victory House, 88 Robert Mugabe Road, Harare, Zimbabwe [ZIMBABWE]
M C M Y CIA. LTDA. (a.k.a. HAPPY DAYS), Calle 22 Norte No. 5A–75, Cali, Colombia; Calle 25 Norte No. 3AN–39, Cali, Colombia; NIT # 800204288–2 (Colombia) [SDNT]
M Q CONSULTORES, S.A. DE C.V., Tijuana, Baja California, Mexico; R.F.C. MQC–020611–6Y9 (Mexico) [SDNTK]
M S CONSTRUCTORES LTDA., Calle 22N No. 5AN–75, Cali, Colombia; NIT # 800206430–1 (Colombia) [SDNT]
M. RODRIGUEZ O. Y CIA. S. EN C.S., Cali, Colombia [SDNT]
MAAROUFI, Tarek Ben Habib Ben Al-Toumi; DOB 23 Nov 1965; POB Ghardimaou, Tunisia; alt. POB Ghar el-dimaa, Tunisia; nationality Tunisia; Passport E590976 (Tunisia) issued 19 Jun 1987 expires 18 Jun 1992 (individual) [SDGT]
MACEDONIA LTDA., Calle 15 No. 10–52, La Union, Valle, Colombia; NIT # 800121860–9 (Colombia) [SDNT]
MACHANGA LTD., Kampala, Uganda [DRCONGO]
MACHAYA, Jaison Max Kokerai; DOB 13 Jun 1952; Member of Parliament for Gokwe Kana (individual) [ZIMBABWE]
MACROFARMA S.A., Calle 17 Norte No. 3N–16, Cali, Colombia; NIT # 816005709–6 (Colombia) [SDNT]
MADAN RIVAS, Jorge, Frankfurt, Germany (individual) [CUBA]
MADE, Joseph Mtakwese; DOB 21 Nov 1954; Passport AN000144 (Zimbabwe); Minister of Agriculture (individual) [ZIMBABWE]
MADZONGWE, Edna; DOB 11 Jul 1945; Deputy Speaker of Parliament (individual) [ZIMBABWE]
MAESAI K.D.P. COMPANY LTD. (a.k.a. BORISAT MAE SAI KHE. DI. PHI. CHAMKAT; a.k.a. MAE SAI K.D.P. COMPANY LTD.), 4 Mu 1, Tambon Wiang Phang Kham, Mae Sai district, Chiang Rai, Thailand [SDNTK]
MAFLA POLO, Jose Freddy, Carrera 11 No. 46–26, Cali, Colombia; c/o GEOPLASTICOS S.A., Cali, Colombia; Calle 52N No. 5B–111, Cali, Colombia; Carrera 11 No. 46–24 Apt. 201, Cali, Colombia; c/o COMPANIA DE FOMENTO MERCANTIL S.A., Cali, Colombia; c/o PARQUE INDUSTRIAL PROGRESO S.A., Yumbo, Colombia; c/o CONSTRUCCIONES PROGRESO DEL PUERTO S.A., Puerto Tejada, Colombia; c/o J. FREDDY MAFLA Y CIA. S.C.S., Cali, Colombia; Carrera 4 No. 11–45 Ofc. 503, Cali, Colombia; POB Cali, Valle, Colombia; Cedula No. 16689935 (Colombia); Passport 16689935 (Colombia) (individual) [SDNT]
MAFLA, Carlos Obeymar (a.k.a. MAFLA, Carlos Obeimar; f.k.a. OBEYMAR MAFLA, Carlos), c/o MERCAVICOLA LTDA., Cali, Colombia; Carrera 11 No. 9–11, Villagorgon, Candelaria, Colombia; DOB 5 Aug 1955; Cedula No. 6226643 (Colombia) (individual) [SDNT]
MAGEN LTDA., Carrera 7 No. 17–01 of. 602, Bogota, Colombia; Calle 23 No. 19–75, Bogota, Colombia; NIT # 830070365–3 (Colombia) [SDNT]
MAHDI, Adil Abdallah; DOB 1945; POB al-Dur, Iraq; Ba'th party regional command chairman, Dhi-Qar (individual) [IRAQ2]
MAHECHA JARAMILLO, Cesar Javier, c/o OBURSATILES S.A., Cali, Colombia; DOB 22 Dec 1967; Cedula No. 16746488 (Colombia); Passport 16746488 (Colombia) (individual) [SDNT]
MAHMOOD, Sultan Bashir-Ud-Din (a.k.a. MAHMOOD, Sultan Bashiruddin; a.k.a. MEHMOOD, Dr. Bashir Uddin; a.k.a. MEKMUD, Sultan Baishiruddin), Street 13, Wazir Akbar Khan, Kabul, Afghanistan; DOB 1937; alt. DOB 1940; alt. DOB 1942; alt. DOB 1943; alt. DOB 1938; alt. DOB 1945; alt. DOB 1939; alt. DOB 1941; alt. DOB 1944; nationality Pakistan (individual) [SDGT]
MAHOFA, Shuvai Ben; DOB 4 Apr 1941; Passport AD000369 (Zimbabwe); Member of Parliament for Gutu South (individual) [ZIMBABWE]
MAJEED, Abdul (a.k.a. MAJEED, Chaudhry Abdul; a.k.a. MAJID, Abdul); DOB 15 Apr 1939; alt. DOB 1938; nationality Pakistan (individual) [SDGT]
MAKHLUF, Hafiz (a.k.a. MAKHLOUF, Hafez); DOB circa 1975; POB Damascus, Syria; Colonel (individual) [LEBANON]
MAKHLUF, Rami (a.k.a. MAKHLOUF, Rami; a.k.a. MAKHLOUF, Rami Bin Mohammed; a.k.a. MAKHLOUF, Rami Mohammad); DOB 10 Jul 1969; POB Syria; citizen Syria; Passport 98044 (Syria) (individual) [SYRIA]
MAKHTAB AL-KHIDAMAT/AL KIFAH, House no. 125, Street 54, Phase II, Hayatabad, Peshawar, Pakistan [SDGT]
MAKKI, Jaffar Ahmad Abdullah; DOB 1956; POB Sudan; Passport A553077 (Sudan) issued 4 Apr 2000; alt. Passport 079925 (Sudan) issued 7 Sep 1992; IARA South Asia Regional Director (individual) [SDGT]
MALDONADO ESCOBAR, Fernando, c/o MOR GAVIRIA Y CIA. S.C.S., Bogota, Colombia; c/o AQUAMARINA ISLAND INTERNATIONAL CORPORATION, Panama City, Panama; c/o AUDITORES ESPECIALIZADOS LTDA., Bogota, Colombia; c/o GAVIRIA MOR Y CIA. LTDA., Girardot, Colombia; c/o PROMOCIONES E INVERSIONES LAS PALMAS S.A., Bogota, Colombia; DOB 16 May 1961; POB Bogota, Colombia; Cedula No. 19445721 (Colombia); Passport AH330349 (Colombia) (individual) [SDNT]
MALDONADO ESCOBAR, Mauricio, c/o MOR GAVIRIA Y CIA. S.C.S., Bogota, Colombia; c/o AUDITORES ESPECIALIZADOS LTDA., Bogota, Colombia; c/o MAYOR COMERCIALIZADORA LTDA., Bogota, Colombia; DOB 22 Oct 1962; POB Colombia; Cedula No. 79266443 (Colombia) (individual) [SDNT]
MALEKI, Naser (a.k.a. MALEKI, Nasser), c/o SHIG, Tehran, Iran; DOB circa 1960; nationality Iran; Passport A0003039 (Iran) (individual) [NPWMD]
MALHERBE DE LEON, Oscar (a.k.a. BECERRA MIRELES, Martin; a.k.a. BECERRA, Martin; a.k.a. MACHERBE, Oscar; a.k.a. MAHERBE, Oscar; a.k.a. MAHLERBE, Oscar; a.k.a. MAHLERBE, Polo; a.k.a. MALARBE, Oscar; a.k.a. MALERBE, Oscar; a.k.a. MALERHBE DE LEON, Oscar; a.k.a. MALERVA, Oscar; a.k.a. MALHARBE DE LEON, Oscar; a.k.a. MALHERBE DELEON, Oscar; a.k.a. MALMERBE, Oscar; a.k.a. MELARBE, Oscar; a.k.a. NALHERBE, Oscar; a.k.a. QALHARBE DE LEON, Oscar; a.k.a. VARGAS, Jorge); DOB 10 Jan 64; POB Mexico (individual) [SDNTK]
MALIK, Assim Mohammed Rafiq Abdul (a.k.a. ABDULMALIK, Abdul Hameed; a.k.a. RAFIQ, Assem), 14 Almotaz Sad Al Deen Street, Al Nozha, Cairo, Egypt (individual) [IRAQ2]
MALINGA, Joshua; DOB 28 Apr 1944; Deputy Secretary for Disabled and Disadvantaged (individual) [ZIMBABWE]
MALUT SUGAR FACTORY, Malut, Sudan [SUDAN]
MAMOUN DARKAZANLI IMPORT-EXPORT COMPANY (a.k.a. DARKAZANLI COMPANY; a.k.a. DARKAZANLI EXPORT-IMPORT SONDERPOSTEN), Uhlenhorsterweg 34 11, Hamburg, Germany [SDGT]
MANAURE S.A. (f.k.a. AGROPECUARIA LA ROBLEDA S.A.), Avenida 2D Norte No. 24N–76, Cali, Colombia; Carrera 61 No. 11–58, Cali, Colombia; NIT # 800160353–2 (Colombia) [SDNT]
MANCO OIL COMPANY [BALKANS]
MANCUSO GOMEZ, Salvatore (a.k.a. LOZADA, Santander), Calle 64 No. 8A-56, Monteria, Cordoba, Colombia; DOB 17 Aug 1964; POB Monteria, Cordoba, Colombia; Cedula No. 6892624 (Colombia) (individual) [SDNTK]
MANDIC, Momcilo 'Momo'; DOB 1 May 1954; POB Kalinovik, Bosnia-Herzegovina; National ID No. JMB 0105954171511 (individual) [BALKANS]
MANDIZHA, Barbara; DOB 24 Oct 1959; Deputy Police Commissioner (individual) [ZIMBABWE]
MANDRO, Khawa Panga (a.k.a. KAHWA, Chief; a.k.a. KAHWA, Mandro Panga; a.k.a. KARIM, Yves Andoul; a.k.a. MANDRO, Kawa; a.k.a. MANDRO, Kawa Panga; a.k.a. MANDRO, Yves Khawa Panga; a.k.a. PANGA, Kawa); DOB 20 Aug 1973; POB Bunia, Democratic Republic of the Congo; former President, Party for Unity and Safeguarding of the Integrity of Congo (PUSIC) (individual) [DRCONGO]
MANGALA SUGAR FACTORY, Mangala, Sudan [SUDAN]
MANGWANA, Munyaradzi Paul, Box 360, Kadoma, Zimbabwe; No. 1, 5th Avenue, Westview, Kadoma, Zimbabwe; DOB 10 Aug 1961; Passport AD000459 (Zimbabwe); Minister of State for Anti-Corruption and Anti-Monopolies (individual) [ZIMBABWE]
MANGWENDE, Witness; DOB 15 Aug 1946; Former Minister of Transport and Communications; Deceased (individual) [ZIMBABWE]
MANJARRES FORERO, Baudelino,, c/o CAJA SOLIDARIA, Bogota, Colombia; c/o FOMENTAMOS, Bogota, Colombia; c/o CREDISOL, Bogota, Colombia; DOB 24 May 1949; Cedula No. 19073383 (Colombia); Passport 19073383 (Colombia) (individual) [SDNT]
MANJARREZ GRANDE, Jorge (a.k.a. MANJARRES GRANDE, Jorge), ASESORIAS DE INGENIERIA EMPRESA UNIPERSONAL, Cali, Colombia; c/o SONAR F.M. S.A., Cali, Colombia; c/o RADIO UNIDAS F.M. S.A., Cali, Colombia;

INVERSIETE S.A., Cali, Colombia; c/o SERVIFAR S.A., Cali, Colombia; c/o INTERAMERICANA DE CONSTRUCCIONES S.A., Cali, Colombia; c/o GRACADAL S.A., Cali, Colombia; c/o ADMINISTRADORA DE SERVICIOS VARIOS CALIMA S.A., Cali, Colombia; GENERAL DE NEGOCIOS Y ADMINISTRACION LTDA., Cali, Colombia; INVERSIONES Y CONSTRUCCIONES COSMOVALLE LTDA., Cali, Colombia; DOB 5 Jul 1959; Cedula No. 16632969 (Colombia); Passport 16632969 (Colombia) (individual) [SDNT]

MANN, Aung Thet (a.k.a. KO, Shwe Mann Ko); DOB 19 Jun 1977; c/o Ayer Shwe Wah Company Limited; c/o Htoo Group of Companies; c/o Htoo Trading Company Limited (individual) [BURMA]

MANN, Shwe (a.k.a. MANN, Thura Shwe); DOB 11 Jul 1947; citizen Burma; nationality Burma; Joint Chief of Staff; Member, State Peace and Development Council (individual) [BURMA]

MANUFACTURAS REAL S.A. (f.k.a. MANUFACTURAS REAL LTDA.), Avenida 13 Sur No. 24C–73 Barrio Balvanera, Bogota, Colombia; NIT # 800158181–6 (Colombia) [SDNT]

MANYIKA, Elliot, PO Box 300, Bindura, Zimbabwe; DOB 30 Jul 1955; Passport AD000642 (Zimbabwe); Minister Without Portfolio (individual) [ZIMBABWE]

MANYONDA, Kenneth, 6 Speke Avenue, Murambi, Mutare, Zimbabwe; DOB 10 Aug 1934; Central Committee Member (individual) [ZIMBABWE]

MANZPER CORP., Panama [CUBA]

MAPRI DE COLOMBIA LTDA., Calle 12B No. 27–40 Int. 4, Bogota, Colombia; Carrera 129 No. 29–57 Int. 137, Bogota, Colombia; NIT # 830103959–1 (Colombia) [SDNT]

MAQUINARIA TECNICA Y TIERRAS LTDA. (a.k.a. M.T.T. LTDA.), Carrera 4A No. 16–04, Cartago, Colombia; Carrera 42 No. 5B–81, Cali, Colombia; NIT # 800084233–1 (Colombia) [SDNT]

MAR AZUL (vessel) [CUBA]

MAR SEM, Maria Gloria, c/o MC OVERSEAS TRADING COMPANY S.A. DE C.V., Guadalajara, Jalisco, Mexico; DOB 19 Aug 1944; POB Mexico; Passport 97140093454 (Mexico) (individual) [SDNT]

MARC LLC, 9100 South Dadeland Boulevard, Suite 912, Miami, FL 33156; 780 Le Jeune Road, Suite 516, Miami, FL 33126; 780 NW 42nd Avenue, Suite 516, Miami, FL 33126 [SDNT]

MARIELA MONDRAGON DE R. Y CIA. S. EN C., Avenida 4 Norte No. 8N–67, Cali, Colombia; Calle 12 Norte No. 9N–56/58, Cali, Colombia; NIT # 800122032–1 (Colombia) [SDNT]

MARIJANOVIC, Milovan; DOB 14 Mar 1944; POB Kraljevo, Serbia (individual) [BALKANS]

MARIMON SARMIENTO, Nayfe Maria, c/o LITOPHARMA, Barranquilla, Colombia; Calle 6 No. 8–19, Salgar, Puerto Colombia, Colombia; c/o COPSERVIR LTDA., Bogota, Colombia; Cedula No. 22583054 (Colombia) (individual) [SDNT]

MARIN ARANGO, Luciano (a.k.a. ''IVAN MARQUEZ''; a.k.a. ''IVAN MARQUES''); DOB 16 Jun 1955; POB Florencia, Caqueta, Colombia; Cedula No. 19304877 (Colombia) (individual) [SDNTK]

MARIN ESTRADA Y CIA. S. EN C.S., Calle 44 No. 1E–155, Cali, Colombia; Apartado Aereo 1175, Cali, Colombia; Carrera 8 No. 32–16, Cali, Colombia; Calle 45 No. 1E–86, Cali, Colombia; NIT # 800083114–9 (Colombia) [SDNT]

MARIN GOMEZ, Mallerly Alejandra, c/o LEMOFAR LTDA., Bogota, Colombia; DOB 2 Jul 1982; Cedula No. 52719053 (Colombia); Passport 52719053 (Colombia) (individual) [SDNT]

MARIN TOBON, Bernardo Antonio, Calle 14 No. 18–62, La Union, Valle, Colombia; c/o FUNDACION CENTRO DE INVESTIGACION HORTIFRUTICOLA DE COLOMBIA, La Union, Valle, Colombia; c/o MANUFACTURAS REAL S.A., Bogota, Colombia; Calle 14 No. 18–64, La Union, Valle, Colombia; c/o GRAJALES S.A., La Union, Valle, Colombia; Carrera 16 No. 13–31, La Union, Valle, Colombia; c/o ILOVIN S.A., Bogota, Colombia; c/o DOXA S.A., La Union, Valle, Colombia; c/o ALMACAES S.A., Bogota, Colombia; c/o HOTEL LOS VINEDOS, La Union, Valle, Colombia; Carrera 16 No. 13–29 Piso 2, La Union, Valle, Colombia; c/o TRANSPORTES DEL ESPIRITU SANTO S.A., La Union, Valle, Colombia; DOB 18 Jan 1954; POB La Union, Valle, Colombia; Cedula No. 6355508 (Colombia) (individual) [SDNT]

MARIN ZAMORA, Jaime Alberto (a.k.a. ''BETO MARIN''), Carrera 13A No. 1A-139, Armenia, Quindio, Colombia; c/o PLASTEC LTDA., Colombia; Avenida San Martin 4–46, Bocagrande, Cartagena, Colombia; DOB 22 Jul 1964; POB Quimbaya, Quindio, Colombia; citizen Colombia; Cedula No. 7544228 (Colombia); Passport AF595263 (Colombia); alt. Passport AD380146 (Colombia) (individual) [SDNT]

MARIN, Pedro Antonio (a.k.a. MARIN MARIN, Pedro Antonio; a.k.a. ''MANUEL MARULANDA''; a.k.a. ''MANUEL MARULANDA VELEZ''; a.k.a. ''TIROFIJO''); DOB 13 May 1930; POB Genova, Quindio, Colombia; Cedula No. 4870142 (Colombia) (individual) [SDNTK]

MARINE REGISTRATION COMPANY, Panama [CUBA]

MARINIC, Zoran; DOB 6 Jun 1963; POB Busovaca, Bosnia-Herzegovina; ICTY indictee at large (individual) [BALKANS]

MARISCO (OR MARISCOS) DE FARALLON, S.A., Panama [CUBA]

MARKETING ASSOCIATES CORPORATION, Calle 52 E, Campo Alegre, Panama City, Panama [CUBA]

MARKOVIC, Mirjana; DOB 10 Jul 1942; wife of Slobodan Milosevic (individual) [BALKANS]

MARKOVIC, Radovac; DOB 1946; alt. DOB 1947; Ex-FRY Deputy Minister of Interior (individual) [BALKANS]

MARKS, Martin Gregory (a.k.a. ''GORDON, Howard A.''); DOB 30 Oct 1958; POB Jamaica; Passport 217720 (Jamaica) (individual) [SDNT]

MARKU, Ton; DOB 13 Jun 1964 (individual) [BALKANS]

MARMOLEJO LOAIZA, Carlos Julio, c/o INVERSIONES AGRICOLAS AVICOLAS Y GANADERAS LA CARMELITA LTDA., Cali, Colombia; c/o COMERCIALIZADORA INTERNACIONAL VALLE DE ORO S.A., Cali, Colombia; c/o INVERSIONES BETANIA LTDA., Cali, Colombia; c/o INDUSTRIA AVICOLA PALMASECA S.A., Cali, Colombia; DOB 3 May 1958; Cedula No. 16601783 (Colombia) (individual) [SDNT]

MARMOLEJO VACA, Hernan Rodrigo, c/o INVERSIONES INVERVALLE S.A., Cali, Colombia; DOB 2 Jul 1948; Cedula No. 14972401 (Colombia) (individual) [SDNT]

MARONDERA MAPLE LEAF FARM, Zimbabwe [ZIMBABWE]

MARQUEZ CANOVAS, Alberto, c/o INMOBILIARIA U.M.V. S.A., Cali, Colombia; c/o SERVICIOS INMOBILIARIOS LTDA., Cali, Colombia; DOB 27 Oct 1951; Cedula No. 14993019 (Colombia) (individual) [SDNT]

MARTAN RODRIGUEZ, Oscar Ignacio, c/o INVERSIONES BRASILAR S.A., Bogota, Colombia; Carrera 33A No. 19–67, Tulua, Valle, Colombia; c/o CORPORACION CLUB DEPORTIVO TULUA, Tulua, Valle, Colombia; c/o AGROPECUARIA LINDARAJA S.A., Cali, Colombia; Calle 27 No. 38A–26, Tulua, Valle, Colombia; DOB 08 Feb 1958; POB Guapi, Cauca, Colombia; citizen Colombia; nationality Colombia; Cedula No. 19365692 (Colombia); Passport AD445570 (Colombia) expires 12 Jun 1992; alt. Passport AJ534873 (Colombia) issued 23 Jun 2005 expires 23 Jun 2015; alt. Passport AF775306 (Colombia) (individual) [SDNT]

MARTIC, Milan; DOB 18 Nov 1954; POB Zagrovic, Croatia; ICTY indictee in custody (individual) [BALKANS]

MARTIN DIAZ, John Edward, c/o AGRO MASCOTAS S.A., Bogota, Colombia; DOB 20 Jun 1974; Cedula No. 79668278 (Colombia); Passport 79668278 (Colombia) (individual) [SDNT]

MARTIN HODWALKER M. & CIA. S. EN C., Via 40 No. 67–42, Barranquilla, Colombia; NIT # 802007314–9 (Colombia) [SDNT]

MARTINEZ CASAS, Carlos Mario, c/o GASOLINERAS SAN FERNANDO S.A. DE C.V., Saucillo, Mexico; Mexico; c/o INDIO VITORIO S. DE P.R. DE R.L. DE C.V., Saucillo, Mexico; DOB 23 Apr 1969; citizen Mexico; nationality Mexico; C.U.R.P. MACC690423HCHRSR08 (Mexico); R.F.C. MACC-690423-D78 (Mexico) (individual) [SDNTK]

MARTINEZ DUARTE, Armando; DOB 12 Aug 1954; nationality Mexico (individual) [SDNTK]

MARTINEZ PLAZA, Omar Axel, c/o MULTISERVICIOS SIGLO, S.A. DE C.V., Tijuana, Baja California, Mexico; DOB 4 Aug 1972; POB Irapuato, Guanajuato, Mexico (individual) [SDNTK]

MARTINEZ VASQUEZ, Beatriz Elena, c/o CAJA SOLIDARIA, Bogota, Colombia; c/o COPSERVIR LTDA., Bogota, Colombia; c/o LITOPHARMA, Barranquilla, Colombia; Cedula No. 22437371 (Colombia) (individual) [SDNT]

MARTINOVIC, Vinko; DOB 21 Sep 1963; POB Mostar, Bosnia-Herzegovina; ICTY indictee (individual) [BALKANS]

MARTYRS FOUNDATION (a.k.a. AL-SHAHID ASSOCIATION FOR MARTYRS AND INTERNEES FAMILIES; a.k.a. AL-SHAHID CORPORATION; a.k.a. BONYAD SHAHID; a.k.a. BONYAD-E SHAHID; a.k.a.

BONYAD-E SHAHID VA ISARGARAN; a.k.a. ES-SHAHID; a.k.a. IRANIAN MARTYRS FUND; a.k.a. SHAHID FOUNDATION; a.k.a. SHAHID FOUNDATION OF THE ISLAMIC REVOLUTION), P.O. Box 15815–1394, Tehran 15900, Iran [SDGT]

MARTYRS FOUNDATION IN LEBANON (a.k.a. AL-MUA'ASSAT AL-SHAHID; a.k.a. AL-SHAHID CHARITABLE AND SOCIAL ORGANIZATION; a.k.a. AL-SHAHID FOUNDATION; a.k.a. AL-SHAHID ORGANIZATION; a.k.a. HIZBALLAH MARTYRS FOUNDATION; a.k.a. ISLAMIC REVOLUTION MARTYRS FOUNDATION; a.k.a. LEBANESE MARTYR ASSOCIATION; a.k.a. LEBANESE MARTYR FOUNDATION; a.k.a. MARTYRS INSTITUTE), Biqa' Valley, Lebanon; P.O. Box 110 24, Bir al-Abed, Beirut, Lebanon [SDGT]

MA'RUF, Taha Muhyi-al-Din (a.k.a. MARUF, Taha, Muhyi al-Din); DOB 1924; POB Sulaymaniyah, Iraq; nationality Iraq; Vice President; member of Revolutionary Command Council (individual) [IRAQ2]

MARUMAHOKO, Rueben, 11 Douglas Clark Avenue, The Grange, Harare, Zimbabwe; DOB 4 Apr 1948; Deputy Minister for Home Affairs (individual) [ZIMBABWE]

MARYOL ENTERPRISES INC., c/o EMPRESA DE NAVEGACION MAMBISA, Apartado 543, San Ignacio 104, Havana, Cuba [CUBA]

MARZUKI, Zulkifli (a.k.a. BIN MARZUKI, Zulkifli; a.k.a. BIN ZUKEPLI, Marzuki; a.k.a. MARZUKI, Zulkepli; a.k.a. ZUKIPLI; a.k.a. ZULKIFLI); DOB 3 Jul 1968; POB Malaysia; nationality Malaysia (individual) [SDGT]

MASPIO CEMENT CORPORATION, P.O. Box 96, Atbara, Sudan [SUDAN]

MASTERS INTERNATIONAL LTD., New Boundary House, London Road, Sunningdale, Ascot, Berkshire SL5 0DJ, United Kingdom; Business Registration Document # 2927685 (United Kingdom) [ZIMBABWE]

MASTERS INTERNATIONAL, INC., 1905 S. Florida Avenue, Lakeland, FL 33803; US FEIN 133798020 (United States) [ZIMBABWE]

MASUKU, Angeline; DOB 14 Oct 1936; Matebeleland South Provincial Governor & Politburo Secretary for Gender and Culture (individual) [ZIMBABWE]

MATA MATA, Noel (a.k.a. MATTA MATTA, Noel; a.k.a. ''EFRAIN GUZMAN''; a.k.a. ''EL CHUCHO''); DOB 31 Jan 1935; alt. DOB 30 Jan 1935; POB Chaparral, Tolima, Colombia; Cedula No. 4870352 (Colombia) (individual) [SDNTK]

MATADERO METROPOLITANO LTDA., Apartado Aereo 3786, Pereira, Colombia; Km. 3 Via Marsella Parque Industrial, Pereira, Colombia; Carrera 10 No. 34–21 Dosq., Pereira, Colombia; NIT # 891412986–8 (Colombia) [SDNT]

MATANGA, Godwin; DOB 5 Feb 1962; Passport ZL042663 (Zimbabwe); Deputy Police Commissioner (individual) [ZIMBABWE]

MATERIAS PRIMAS Y SUMINISTROS S.A. (a.k.a. MATERIAS PRIMAS Y SUMINISTROS LTDA.; a.k.a. MATSUM S.A.), Calle 12B No. 28–58, Bogota, Colombia; Calle 39 Bis A No. 27–16, Bogota, Colombia; Calle 39 Bis A No. 27–20, Bogota, Colombia; NIT # 830031863–3 (Colombia) [SDNT]

MATHEMA, Cain; DOB 28 Jan 1948; Bulawayo Provincial Governor (individual) [ZIMBABWE]

MATHUTHU, Sithokozile; Matabeleland North Provincial Governor & Deputy Secretary for Transport and Social Welfare (individual) [ZIMBABWE]

MATIBIRI, Innocent Tonderai; DOB 9 Oct 1968; Deputy Police Commissioner (individual) [ZIMBABWE]

MATIZA, Biggie Joel; DOB 17 Aug 1960; Passport ZA557399 (Zimbabwe); Deputy Minister of Rural Housing and Social Amenities (individual) [ZIMBABWE]

MATONGA, Bright; DOB circa 1969; Deputy Minister of Information and Publicity (individual) [ZIMBABWE]

MATRIX CHURCHILL CORPORATION, 5903 Harper Road, Cleveland, OH 44139 [IRAQ2]

MATSHALAGA, Obert; DOB 21 Apr 1951; Deputy Minister of Foreign Affairs (individual) [ZIMBABWE]

MATTHEW, Karen, c/o Freight Movers International, Basseterre, Saint Kitts and Nevis; DOB 27 Jan 1964; POB St Vincent & Grenadines (individual) [SDNTK]

MATTHEWS, Glenroy Vingrove (a.k.a. MATHEW, Glenroy; a.k.a. MATTHEW, Glenroy Wingrove; a.k.a. MATTHEWS, Glen Roy), Frigate Bay, Saint Kitts and Nevis; DOB 26 Jul 1958; POB St Kitts and Nevis; Passport 047815 (Saint Kitts and Nevis) (individual) [SDNTK]

MAX (MYANMAR) CONSTRUCTION CO., LTD, 1 Ywama Curve, Bayint Naung Road, Ward (2), Hlaing Township, Yangon, Burma [BURMA] [JADE]

MAX MYANMAR GEMS AND JEWELLERY CO., LTD., 1 Ywama Curve, Bayint Naung Road, Ward (2), Hlaing Township, Yangon, Burma [BURMA] [JADE]

MAX MYANMAR GROUP OF COMPANIES (a.k.a. MAX MYANMAR; a.k.a. MAX MYANMAR CO.; a.k.a. MAX MYANMAR COMPANY LIMITED; a.k.a. MAX MYANMAR GROUP), No. 1 Ywama Curve, Ba Yint Naung Road, Ward (2), Hlaing Township, Yangon, Burma [BURMA] [JADE]

MAX MYANMAR MANUFACTURING CO., LTD., 1 Ywama Curve, Bayint Naung Road, Ward (2), Hlaing Township, Yangon, Burma [BURMA] [JADE]

MAX MYANMAR SERVICES CO., LTD., 1 Ywama Curve, Bayint Naung Road, Ward (2), Hlaing Township, Yangon, Burma [BURMA] [JADE]

MAX MYANMAR TRADING CO., LTD., 1 Ywama Curve, Bayint Naung Road, Ward (2), Hlaing Township, Yangon, Burma [BURMA] [JADE]

MAX SINGAPORE INTERNATIONAL PTE. LTD., 3 Shenton Way, #24–02, Shenton House 068805, Singapore [BURMA] [JADE]

MAXITIENDAS TODO EN UNO, Avenida Guadalupe con Avenida Simon Bolivar, Cali, Colombia [SDNT]

MAY ENGINEERING COMPANY, C/O ENGINEERING EQUIPMENT CORPORATION, P.O. Box 97, Khartoum, Sudan [SUDAN]

MAYOR COMERCIALIZADORA LTDA., Carrera 40 No. 169–30 Barrio Toberin, Bogota, Colombia; NIT # 800088288–4 (Colombia) [SDNT]

MAZANDARAN CEMENT COMPANY, 40 Satari Ave., Afrigha Highway, P.O. Box 19688, Tehran, Iran; Africa Street, Sattari Street No. 40, P.O. Box 121, Tehran 19688, Iran [NPWMD]

MAZANDARAN TEXTILE COMPANY (a.k.a. SHERKATE NASAJI MAZANDARAN), Kendovan Alley 5, Vila Street, Enghelab Ave., P.O. Box 11365–9513, Tehran 11318, Iran; Sari Ave., Ghaemshahr, Iran; 28 Candovan Cooy Enghelab Ave., P.O. Box 11318, Tehran, Iran [NPWMD]

MAZUERO ERAZO, Hugo, c/o INVERSIONES SANTA LTDA., Cali, Colombia; c/o GRUPO SANTA LTDA., Cali, Colombia; c/o SOCIEDAD CONSTRUCTORA LA CASCADA S.A., Cali, Colombia; DOB 17 Jul 1936; alt. DOB 1945; alt. DOB 14 Jul 1936; Cedula No. 2445590 (Colombia) (individual) [SDNT]

MBARUSHIMANA, Callixte, Paris, France; Thiais, France; DOB 24 Jul 1963; POB Ndusu/Ruhengeri, Northern Province, Rwanda; alt. POB Ruhengeri Province, Rwanda; citizen Rwanda; FDLR Executive Secretary (individual) [DRCONGO]

MC OVERSEAS TRADING COMPANY SA DE CV, Justo Sierra 1963, Guadalajara, Jalisco, Mexico [SDNT]

MEADOWBROOK INVESTMENTS LIMITED, 44 Upper Belgrave Road, Clifton, Bristol BS8 2XN, United Kingdom; Registered Charity No. 05059698 (United Kingdom) [SDGT]

MEDIA MARKETING E.U., Avenida 4N No. 6–67 of. 610, Cali, Colombia; NIT # 805019234–0 (Colombia) [SDNT]

MEDINA CASTILLO, Sandro, c/o LITOPHARMA, Barranquilla, Colombia; c/o SU SERVICIO SOCIEDAD LTDA., Bogota, Colombia; Cedula No. 8538055 (Colombia) (individual) [SDNT]

MEDINA FAJARDO, Yovany (a.k.a. MEDINA FAJARDO, Yovani), c/o CODISA, Bogota, Colombia; c/o FARMACOOP, Bogota, Colombia; DOB 21 Nov 1969; Cedula No. 11317493 (Colombia); Passport 11317493 (Colombia) (individual) [SDNT]

MEDINA, Ana Maria (a.k.a. MEDINA, Anita), Panama (individual) [CUBA]

MEED INTERNATIONAL LIMITED, 3 Mandeville Place, London, United Kingdom [IRAQ2]

MEFLA MOSQUERA, Aristides, c/o FARMALIDER S.A., Cali, Colombia; Cedula No. 6039981 (Colombia) (individual) [SDNT]

MEGA DOLAR, S.A. DE C.V. (a.k.a. MEGA DOLAR MULTISERVICIOS), Local C-25 Plaza Rio, Colonia Zona Rio, Tijuana, Baja California, Mexico; Av. Via Rapida 25-E, Colonia Zona Rio, Tijuana, Baja California, Mexico; R.F.C. MDO–940316-RTA (Mexico) [SDNTK]

MEGAPHARMA LTDA. (a.k.a. COMERCOOP; a.k.a. COOPERATIVA HUILENSE DE COMERCIALIZACION COMERCOOP LTDA.; a.k.a. COOPERATIVA MULTIACTIVA DE DISTRIBUCION MEGAPHARMA LTDA.), Calle 15 No. 31–99 Bodega 5 Parque Industrial Acerosa, Yumbo, Colombia; Carrera 26 No. 62–42,

Bogota, Colombia; Diag. 57A No. 24–84, Bogota, Colombia; NIT # 813002466–7 (Colombia) [SDNT]

MEGAPLAST S.A., Calle 0 No. 2–276, Palmira, Valle, Colombia; NIT # 815002727–1 (Colombia) [SDNT]

MEHR CAYMAN LTD., Walker House, 87 Mary Street, George Town, Grand Cayman KY1–9002, Cayman Islands [NPWMD]

MEJAKIC, Zeljko; DOB 2 Aug 1964; POB Petrov Gaj, Bosnia-Herzegovina; ICTY indictee at large (individual) [BALKANS]

MEJIA MAGNANI, John Yvan (a.k.a. MEJIA MAGNANI, Jhon; a.k.a. MEJIA MAGNANI, John Ivan), La Ladera MZ. J LT. 14, Las Vinas, Lima, Peru; c/o AERO CONTINENTE S.A., Lima, Peru; c/o CONTINENTE MOVIL Y SERVICIOS S.R.L., Callao, Peru; c/o SISTEMA DE DISTRIBUCION MUNDIAL S.A.C., Lima, Peru; DOB 20 Apr 1966; LE Number 07541863 (Peru) (individual) [SDNTK]

MEJIA MUNERA, Miguel Angel Melchor (a.k.a. MEJIA MUNERA, Miguel Angel; a.k.a. ''COMANDANTE PABLO''; a.k.a. ''LOS MELLIZOS''; a.k.a. ''PABLO MEJIA''), Calle 9F No. 24–98, Cali, Colombia; c/o CIA COMERCIALIZADORA DE BIENES RAICES LTDA., Cali, Colombia; DOB 11 Jul 1959; POB Cali, Colombia; citizen Colombia; nationality Colombia; Cedula No. 16627309 (Colombia); Passport AC744430 (Colombia) (individual) [SDNT]

MEJIA MUNERA, Victor Manuel (a.k.a. ''DON SEBASTIAN''; a.k.a. ''LOS MELLIZOS''; a.k.a. ''PABLO ARAUCA''), Colombia; DOB 11 Jul 1959; POB Cali, Colombia; citizen Colombia; nationality Colombia; Cedula No. 16627308 (Colombia); Passport AE313327 (Colombia) (individual) [SDNT]

MEJIA REGALADO, Jose Manuel, Agrp. Block K Dpto 200, Lima, Peru; DOB 18 May 1948; LE Number 07609623 (Peru) (individual) [SDNTK]

MELFI MARINE CORPORATION S.A. (a.k.a. MELFI MARINE S.A.), Anillo del Puerto e/ Pote y Linea del Ferrocarril, La Habana Vieja, Habana, Cuba; Oficina 7, Edificio Senorial, Calle 50 Apartado 31, Panama City 5, Panama; Calle Oficios No. 410 e/ Luz y Acosta, La Habana Vieja, Habana, Cuba; Oficios 104 Havana Vieja, Havana, Cuba [CUBA]

MELGOZA TORRES, Martin, c/o FARMACIA VIDA SUPREMA, S.A. DE C.V., Boulevard Agua Caliente 1381, Revolucion, Tijuana, Baja California Norte 22400, Mexico; Paseo Coronado No. 964, Fraccionamiento El Mirador, Tijuana, Baja California, Mexico; DOB 11 Nov 1946; POB Villa de Alvarez, Colima, Mexico; Credencial electoral 073855815496 (Mexico); R.F.C. METM–46111-BF4 (Mexico) (individual) [SDNTK]

MELLAT BANK SB CJSC (a.k.a. ''MELLAT BANK DB AOZT''), P.O. Box 24, Yerevan 0010, Armenia [NPWMD]

MELLI AGROCHEMICAL COMPANY PJS (a.k.a. SHERKAT MELLI SHIMI KESHAVARZ), Mola Sadra Street, 215 Khordad, Sadr Alley No. 13, Vanak Sq., P.O. Box 15875–1734, Tehran, Iran [NPWMD]

MELLI BANK PLC, 1 London Wall, London EC2Y 5EA, United Kingdom [NPWMD]

MELLI INVESTMENT HOLDING INTERNATIONAL (a.k.a. MEHR), 514, Business Avenue Building, Deira, P.O. Box 181878, Dubai, United Arab Emirates; Registration Certificate Number (Dubai) 0107 issued 30 Nov 2005 [NPWMD]

MELON LTDA., Unicentro Casa Grajales, Cali, Colombia; NIT # 805000581–8 (Colombia) [SDNT]

MENDEZ DIAZ, Marlen, c/o COOPDISAN, Bucaramanga, Colombia; c/o DROGAS LA REBAJA BUCARAMANGA S.A., Bucaramanga, Colombia; Cedula No. 37813841 (Colombia); Passport 37813841 (Colombia) (individual) [SDNT]

MENDEZ SALAZAR, John Jairo, c/o MAQUINARIA TECNICA Y TIERRAS LTDA., Cali, Colombia; Carrera 42 No. 5B–81, Cali, Colombia; Calle 1 No. 56–109 Casa 32, Cali, Colombia; Cedula No. 98515360 (Colombia); Passport 98515360 (Colombia) (individual) [SDNT]

MENDOZA RODRIGUEZ, Ana Janeth, c/o CREDISOL, Bogota, Colombia; c/o ADMACOOP, Bogota, Colombia; DOB 6 Jul 1963; Cedula No. 51721267 (Colombia); Passport 51721267 (Colombia) (individual) [SDNT]

MENDOZA ROJAS, Monica Jazmin, c/o COOPDISAN, Bucaramanga, Colombia; c/o COPSERVIR LTDA., Bogota, Colombia; c/o SEGECOL LTDA., Bucaramanga, Colombia; Cedula No. 37728726 (Colombia) (individual) [SDNT]

MERCADO DE LA HOZ, Manuel Enrique, c/ o COPSERVIR LTDA., Bogota, Colombia; Cedula No. 72134380 (Colombia) (individual) [SDNT]

MERCAVICOLA LTDA., Calle 34 No. 5A–25, Cali, Colombia; Calle 47AN, Cali, Colombia; NIT # 800086338–5 (Colombia) [SDNT]

MERCURIO INTERNACIONAL S.A., Carrera 15 No. 93–60 Local 205, Bogota, Colombia; Transversal 71D No. 26–94 Sur, Local 3504, Bogota, Colombia; Carrera 1 No. 61A–30, Locales 80 y 81, Cali, Colombia; Carrera 54 No. 72–147, Local 144, Barranquilla, Colombia; Avenida Carrera 15 No. 100–69, Oficina 303, Bogota, Colombia; Carrera 43A No. 34–95, Local 253, Medellin, Colombia; Calle 5 No. 50–103, Local C108, Cali, Colombia; Calle 19 No. 6–48, Oficinas 403 y 404, Pereira, Colombia; Carrera 14 No. 18–56, Locales 34 y 35, Piso 3, Armenia, Colombia; NIT # 830063708–7 (Colombia) [SDNTK]

MERCURIUS IMPORT/EXPORT COMPANY, PANAMA, S.A., Calle C, Edificio 18, Box 4048, Colon Free Zone, Panama [CUBA]

MESBAH ENERGY COMPANY (a.k.a. ''MEC''), 77 Armaghan Gharbi Street, Valiasr Blve, Tehran, Iran [NPWMD]

MEXGLOBO, S.A. DE C.V., Boulevard Agua Caliente No. 148, Col. Revolucion, Tijuana, Baja California 22015, Mexico; R.F.C. MEX9909034Y0 (Mexico) [SDNTK]

MEZA CAZARES, Arturo (a.k.a. MEZA CAZAREZ, Arturo; a.k.a. MEZA GASTELLUM, Arturo; a.k.a. MEZA, JR., Arturo), Calle Benito Juarez No. 636, Oriente, Colonia Centro, Culiacan, Sinaloa, Mexico; Avenida Rodolfo G. Robles No. 153 Sur, Colonia Almada, Culiacan, Sinaloa, Mexico; Calle G. Robles No. 153, Colonia Almada Sur, Culiacan, Sinaloa, Mexico; c/o COMERCIAL DOMELY, S.A. DE C.V., Culiacan, Sinaloa, Mexico; c/o SISTEMA DE RADIO DE SINALOA, S.A. DE C.V., Culiacan, Sinaloa, Mexico; Avenida Ignacio Aldama #257, Colonia Centro, Culiacan, Sinaloa, Mexico; Avenida Rodolfo Robles 153 Sur, Colonia Jorge Almada, Culiacan, Sinaloa, Mexico; c/o CONSORCIO INMOBILIARIO DEL VALLE DE CULIACAN, S.A. DE C.V., Culiacan, Sinaloa, Mexico; Avenida Ignacio Aldama No. 257 Norte, Culiacan, Sinaloa, Mexico; Predio de San Rafael, Sindicatura de Costa Rica, Culiacan, Sinaloa, Mexico; DOB 6 Mar 1976; alt. DOB 29 Mar 1976; POB Culiacan, Sinaloa, Mexico; citizen Mexico; nationality Mexico; Identification Number B9457110 (United States); R.F.C. MECA760306V70 (Mexico); alt. R.F.C. MECA760329 (Mexico) (individual) [SDNTK]

MEZA CAZARES, Gipsy (a.k.a. MEZA CAZAREZ, Gipsy; a.k.a. MEZA CAZAREZ, Gipzy; a.k.a. MEZA GASTELLUM, Gipsy), No. 626 Calle Benito Juarez, Culiacan, Sinaloa, Mexico; c/o CONSORCIO INMOBILIARIO DEL VALLE DE CULIACAN, S.A. DE C.V., Culiacan, Sinaloa, Mexico; Mariano Escobedo No. 366–102, Colonia Centro, Culiacan, Sinaloa, Mexico; Calle G. Robles No. 153, Colonia Almada Sur, Culiacan, Sinaloa, Mexico; c/o SISTEMA DE RADIO DE SINALOA, S.A. DE C.V., Culiacan, Sinaloa, Mexico; c/o COMERCIAL JOANA, S.A. DE C.V., Guadalajara, Jalisco, Mexico; DOB 24 Sep 1973; alt. DOB 24 Sep 1972; POB Culiacan, Sinaloa, Mexico; citizen Mexico; nationality Mexico; R.F.C. MECG730924N73 (Mexico); alt. R.F.C. MECG720924N75 (Mexico) (individual) [SDNTK]

MEZA CAZARES, Lizbeth (a.k.a. MEZA CAZAREZ, Lizbeth; a.k.a. MEZA GASTELLUM, Lizbeth), Calle G. Robles No. 153, Colonia Almada Sur, Culiacan, Sinaloa, Mexico; Avenida Rodolfo G. Robles No. 153 Sur, Colonia Almada, Culiacan, Sinaloa, Mexico; Avenida Rodolfo Robles 153 Sur, Colonia Jorge Almada, Culiacan, Sinaloa, Mexico; Cll Villa Santander 2834, Villas del Rio Culiacan Villas del Rio Villa Vizcaya, Culiacan Rosales, Culiacan, Sinaloa, Mexico; c/o CONSORCIO INMOBILIARIO DEL VALLE DE CULIACAN, S.A. DE C.V., Culiacan, Sinaloa, Mexico; Calle Juan de Dios Batiz No. 139, Culiacan, Sinaloa, Mexico; No. 154 Avenida Teofilo Noris, Colonia Almada, Culiacan, Sinaloa, Mexico; c/o SISTEMA DE RADIO DE SINALOA, S.A. DE C.V., Culiacan, Sinaloa, Mexico; DOB 5 Jan 1981; alt. DOB 15 Jan 1981; POB Culiacan, Sinaloa, Mexico; citizen Mexico; nationality Mexico; R.F.C. MECL810115 (Mexico) (individual) [SDNTK]

MEZA GASPAR, Arturo (a.k.a. MEZA, Arturo), c/o SIN-MEX IMPORTADORA, S.A. DE C.V., Mexico, Distrito Federal, Mexico; c/o SISTEMA DE RADIO DE SINALOA, S.A. DE C.V., Culiacan, Sinaloa, Mexico; c/o CONSORCIO INMOBILIARIO DEL VALLE DE CULIACAN, S.A. DE C.V., Culiacan, Sinaloa, Mexico; Predio de San Rafael, Sindicatura de Costa Rica,

Culiacan, Sinaloa, Mexico; Avenida Rodolfo G. Robles No. 153, Sur, Colonia Aldama, Culiacan, Sinaloa, Mexico; Calle Juan de Dios Batiz No. 139, Culiacan, Sinaloa, Mexico; c/o OPERADORA INTEGRAL DE COMERCIO, S.A. DE C.V., Tijuana, Baja California, Mexico; Avenida Ignacio Aldama No. 257 Norte, Culiacan, Sinaloa, Mexico; c/o TOYS FACTORY, S.A. DE C.V., Tijuana, Baja California, Mexico; Calle Mariano Escobedo No. 366, #102, Culiacan, Sinaloa, Mexico; DOB 4 Jul 1946; POB Jacola, Culiacan, Sinaloa, Mexico; citizen Mexico; nationality Mexico; Electoral Registry No. MZGSAR46070425H400 (Mexico); R.F.C. MEGA460704 (Mexico) (individual) [SDNTK]

MICHIELSEN, Tom (a.k.a. MICHIELSEN, Tom R.D.), Belgium; DOB 22 Dec 1975; POB Kapellen, Belgium; citizen Belgium; Identification Number 1041 002019 56 (Belgium); Passport FF615720 (Belgium) (individual) [SDNTK]

MIDCO FINANCE S.A. (a.k.a. MIDCO FINANCIAL S.A.; a.k.a. MONTANA MANAGEMENT INC.), Panama; 57 Rue du Rhone, CH–1204 Geneva, Switzerland; US FEIN CH–660–0–469–982–0 (United States); Switzerland [IRAQ2]

MIDZI, Amos Bernard Muvenga; DOB 4 July 1952; Minister of Mines and Mining Development (individual) [ZIMBABWE]

MIJARES TRANCOSO, Gilberto, c/o ADP, S.C., Tijuana, Baja California, Mexico; P.O. Box 43440, San Ysidro, California 92173; c/o Distribuidora Imperial De Baja California, S.A. de C.V., Tijuana, Baja California, Mexico; Calle Luis Echeverria 6329-B, Infonavit Presidentes, Tijuana, Baja California, Mexico; DOB 4 Feb 1951; POB Vicente Guerrero, Durango; Driver's License No. 210082884 (Mexico); Passport ASDI1418 (Mexico) (individual) [SDNTK]

MIKLASHEVICH, Petr Petrovich (a.k.a. MIKLASHEVICH, Piotr Piatrovich); DOB 1954; POB Kosuta, Minsk district, Belarus; citizen Belarus; nationality Belarus; Prosecutor General (individual) [BELARUS]

MILITARY COMMERCIAL CORPORATION, P.O. Box 221, Khartoum, Sudan [SUDAN]

MILLAN BONILLA, German, c/o CONSTRUVIDA S.A., Cali, Colombia; DOB 1 Feb 1952; Cedula No. 14995885 (Colombia) (individual) [SDNT]

MILLAN SALAS, Jaime, c/o VALORCORP S.A., Bogota, Colombia; c/o ALERO S.A., Cali, Colombia; Cedula No. 16589582 (Colombia) (individual) [SDNT]

MILOSEVIC, Borislav; DOB 1936; brother of Slobodan Milosevic (individual) [BALKANS]

MILOSEVIC, Dragomir; DOB 4 Feb 1942; POB Murgas, Bosnia-Herzegovina; ICTY indictee (individual) [BALKANS]

MILOSEVIC, Marija; DOB 1965; daughter of Slobodan Milosevic (individual) [BALKANS]

MILOSEVIC, Marko; DOB 2 Jul 1974; son of Slobodan Milosevic (individual) [BALKANS]

MILOSEVIC, Milanka; sister-in-law of Slobodan Milosevic (individual) [BALKANS]

MILOSEVIC, Slobodan; DOB 20 Aug 1941; POB Pozarevac, Serbia and Montenegro; ex-FRY President; ICTY indictee in custody (individual) [BALKANS]

MILUTINOVIC, Milan; DOB 19 Dec 1942; POB Belgrade, Serbia and Montenegro; ex-President of Republika Srpska; ICTY indictee in custody (individual) [BALKANS]

MIN, Zaw, Burma; DOB 10 Jan 1949; citizen Burma; nationality Burma; Colonel, Minister of Electric Power 1 (individual) [BURMA]

MINERA LA CASTELLANA Y ANEXAS S.A. DE C.V., Culiacan, Sinaloa, Mexico; R.F.C. MCA9011192R3 (Mexico) [SDNTK]

MINERA RIO PRESIDIO S.A. DE C.V., Culiacan, Sinaloa, Mexico [SDNTK]

MINERALS MARKETING CORPORATION OF ZIMBABWE (a.k.a. MMCZ), P.O. Box 2628, Harare, Zimbabwe; 90 Mutare Road, Harare, Zimbabwe; Phone No. 263–4–486946; Fax No. 263–4–487261 [ZIMBABWE]

MININ, Leonid (a.k.a. BLAVSTEIN; a.k.a. BLUVSHTEIN; a.k.a. BLYAFSHTEIN; a.k.a. BLYUFSHTEIN; a.k.a. BLYUVSHTEIN; a.k.a. BRESLAN, Wolf; a.k.a. BRESLAN, Wulf; a.k.a. KERLER, Vladimir Abramovich; a.k.a. OSOLS, Igor; a.k.a. POPELA, Vladimir Abramovich; a.k.a. POPELAVESKI, Vladimir Abramovich; a.k.a. POPELO, Vladimir Abramovich; a.k.a. POPELOVESKI, Vladimir Abramovich; a.k.a. POPILOVESKI, Vladimir Abramovich); DOB 14 Dec 1947; alt. DOB 18 Oct 1946; nationality Ukraine; Passport 9001689 (Israel) issued 23 Jan 1997 expires 22 Jan 1999; alt. Passport 5280007248D (Germany); alt. Passport 6019832 (Israel) issued 6 Nov 1994 expires 5 Nov 1999; alt. Passport KI0861177 (Russia); alt. Passport 65118 (Bolivia); alt. Passport 90109052 (Israel) issued 26 Nov 1997; alt. Passport 18106739D (Germany); Owner, Exotic Tropical Timber Enterprise (individual) [LIBERIA]

MINISTRY OF DEFENSE FOR ARMED FORCES LOGISTICS (a.k.a. MINISTRY OF DEFENSE AND SUPPORT FOR ARMED FORCES LOGISTICS; a.k.a. MODAFL; a.k.a. MODSAF), located on the west side of Dabestan Street, Abbas Abad District, Tehran, Iran [NPWMD]

MIR DAMAD; Vessel Registration Identification IMO 9148491 (vessel) [NPWMD]

MIR EMAD; Vessel Registration Identification IMO 9148518 (vessel) [NPWMD]

MIRA E.U., Avenida 8 Norte No. 10–91 Ofc. 301, Cali, Colombia; NIT # 805009267–0 (Colombia) [SDNT]

MIRA VALENCIA, Adriana Patricia, Avenida Piedra Grande, Casa 45, Cali, Colombia; c/o UNIDAS S.A., Cali, Colombia; Carrera 4 No. 11–45 Ofc. 503, Cali, Colombia; c/o MIRA E.U., Cali, Colombia; c/o CONSTRUCCIONES PROGRESO DEL PUERTO S.A., Puerto Tejada, Colombia; DOB 07 May 1970; POB Cali, Valle, Colombia; Cedula No. 66810589 (Colombia); Passport 66810589 (Colombia) (individual) [SDNT]

MIRACANA INMOBILIARIA QUILICHAO S.A. & CIA S.C.A., Avenida 4N No. 6N-61, Ofc. 510, Cali, Colombia; NIT # 805017200–1 (Colombia) [SDNT]

MIRALUNA LTDA. (f.k.a. EL PASO LTDA.), Carrera 4 No. 12–41 of. 1403, 1501, Cali, Colombia; NIT # 890328836–9 (Colombia) [SDNT]

MIRCHI, Iqbal (a.k.a. MAMEN, Mohamed Iqbal; a.k.a. MEMON, Iqbal Mohammed; a.k.a. MERCHANT, Iqbal); DOB 25 Apr 1950; alt. DOB 13 Feb 1959; alt. DOB 12 Aug 1959; POB Bombay, India; Passport H–825326 (United Arab Emirates); alt. Passport C–602033 (India); alt. Passport G–679302 (United Arab Emirates) (individual) [SDNTK]

MIRZA KOCHEK KHAN; Vessel Registration Identification IMO 7027899 (vessel) [NPWMD]

MISHAAL, Khalid, Damascus, Syria; DOB 1956; POB Silwad, Ramallah, West Bank (Palestinian Authority) (individual) [SDGT]

MIZAN MACHINE MANUFACTURING GROUP (a.k.a. 3MG), P.O. Box 16595–365, Tehran, Iran [NPWMD]

MLA INVESTMENTS INC., Virgin Islands, British; C.R. No. IBC 525487 (Virgin Islands, British) [SDNT]

MLADIC, Ratko; DOB 12 Mar 1943; POB Bozinovici, Bosnia-Herzegovina; ICTY indictee at large (individual) [BALKANS]

MNANGAGWA, Emmerson Dambudzo; DOB 15 Sep 1946; Passport AD00060 (Zimbabwe); Minister of Rural Housing and Social Amenities (individual) [ZIMBABWE]

MNASRI, Fethi Ben Rebai Ben Absha (a.k.a. FETHI, Alic; a.k.a. ''ABU OMAR''; a.k.a. ''AMOR''), Via Toscana n.46, Bologna, Italy; Via di Saliceto n.51/9, Bologna, Italy; DOB 6 Mar 1969; POB Baja, Tunisia; Passport L497470 issued 3 Jun 1997 expires 2 Jun 2002 (individual) [SDGT]

MOA NICKEL SA, Cuba [CUBA]

MODERN ELECTRONIC COMPANY, Khartoum, Sudan [SUDAN]

MODERN LAUNDRY BLUE FACTORY (a.k.a. THE MODERN LAUNDRY BLUE FACTORY), P.O. Box 2241, Khartoum, Sudan [SUDAN]

MODERN PLASTIC & CERAMICS INDUSTRIES COMPANY, Khartoum, Sudan [SUDAN]

MODULO DE CAMBIOS (a.k.a. MODULO DE CAMBIO; a.k.a. MODULO DE CAMBIO-MULTISERVICIO; a.k.a. MODULOS DE CAMBIO), Calle 2 y Moderno, Zona Centro, Tijuana, Baja California, Mexico; Benito Juarez 8290, C.P. 22000, Tijuana, Baja California, Mexico [SDNTK]

MOGOLLON RUEDA, Eduardo, c/o INVERSIONES RODRIGUEZ MORENO Y CIA. S. EN C., Cali, Colombia; c/o DISTRIBUIDORA DE DROGAS CONDOR LTDA., Bogota, Colombia; c/o ALFA PHARMA S.A., Bogota, Colombia; c/o DEPOSITO POPULAR DE DROGAS S.A., Cali, Colombia; DOB 5 Feb 1953; Cedula No. 19194691 (Colombia) (individual) [SDNT]

MOHADI, Kembo Campbell Dugishi; DOB 15 Nov 1949; Minister of Home Affairs (individual) [ZIMBABWE]

MOHAMED, Abdul Kader Ibrahim, Jianguomenwai Diplomatic Housing Compound, Building 7–1, 5th Floor, Apartment 4, Beijing, China (individual) [IRAQ2]

MOHAMED, Daki, Via Melato 11, Reggio Emilia, Italy; DOB 29 Mar 1965; POB

Casablanca, Morocco; nationality Morocco; arrested 4 Apr 2003 (individual) [SDGT]

MOHAMMAD, Haji Baz (a.k.a. MOHAMMAD, Baz); DOB 1958; POB Kandahar, Afghanistan; nationality Afghanistan (individual) [SDNTK]

MOHAMMADHASNI, Haji Asad Khan Zarkari (a.k.a. ASAD, Haji; a.k.a. KHAN, Asad; a.k.a. KHAN, Haji Asad; a.k.a. KHAN, Mohammed; a.k.a. MOHADMMADHASNI, Asad Khan; a.k.a. MOHAMMADHASNI, Haji Asad Khan; a.k.a. MOHMMADHASNI, Asad Khan; a.k.a. MUHAMMADHASNI, Asad Khan; a.k.a. ZARKARI, Asad Khan; a.k.a. ''HAJI ABDULLAH''), Kabul, Afghanistan; Nimroz, Afghanistan; Karachi, Pakistan; Balochistan, Pakistan; Dubai, United Arab Emirates; Basalani, Afghanistan; DOB 01 Jan 1955; POB Nimroz, Afghanistan; citizen Afghanistan; Passport OR1126692 (Afghanistan) (individual) [SDNTK]

MOHAMMED, Fazul Abdullah (a.k.a. ABDALLA, Fazul; a.k.a. ADBALLAH, Fazul; a.k.a. AISHA, Abu; a.k.a. AL SUDANI, Abu Seif; a.k.a. ALI, Fadel Abdallah Mohammed; a.k.a. FAZUL, Abdalla; a.k.a. FAZUL, Abdallah; a.k.a. FAZUL, Abdallah Mohammed; a.k.a. FAZUL, Haroon; a.k.a. FAZUL, Harun; a.k.a. HAROON; a.k.a. HAROUN, Fadhil; a.k.a. HARUN; a.k.a. LUQMAN, Abu; a.k.a. MOHAMMED, Fazul; a.k.a. MOHAMMED, Fazul Abdilahi; a.k.a. MOHAMMED, Fouad; a.k.a. MUHAMAD, Fadil Abdallah); DOB 25 Aug 1972; alt. DOB 25 Feb 1974; alt. DOB 25 Dec 1974; POB Moroni, Comoros Islands; citizen Comoros; alt. citizen Kenya (individual) [SDGT]

MOHAMMED, Khalid Shaikh (a.k.a. ALI, Salem; a.k.a. BIN KHALID, Fahd Bin Adballah; a.k.a. HENIN, Ashraf Refaat Nabith; a.k.a. WADOOD, Khalid Adbul); DOB 14 Apr 1965; alt. DOB 1 Mar 1964; POB Kuwait; citizen Kuwait (individual) [SDGT]

MOISES SAIEH Y CIA. S.C.A., Carrera 74 No. 76—150, Barranquilla, Atlantico, Colombia; NIT # 890114338–3 (Colombia) [SDNT]

MOLDTRANSAVIA SRL, Aeroport, Chisinau MD–2026, Moldova [LIBERIA]

MOLDURAS DEL NOROESTE S.A. DE C.V., Blvd. Francisco Eusebio Kino 177–7, Col. 5 de Mayo, Hermosillo, Sonora 83010, Mexico; R.F.C. MNO960403HJ0 (Mexico) [SDNTK]

MOLINA CARACAS, Tomas (a.k.a. CASTILLO CORTES, Miguel Angel; a.k.a. MEDINA CARACAS, Tomas; a.k.a. ''ARTURO GUEVARA''; a.k.a. ''EL PATRON'''; a.k.a. ''JORGE MEDINA''; a.k.a. ''NEGRO ACACIO''); DOB 15 Mar 1965; POB Lopez De Micay, Cauca, Colombia (individual) [SDNTK]

MOLINA GONZALEZ, Jose Epinemio (a.k.a. MOLINA GONZALEZ, Jose Epimenio; a.k.a. ''DANILO GARCIA''); DOB 18 Nov 1957; POB Icononzo, Tolima, Colombia; citizen Colombia; nationality Colombia; Cedula No. T.I. 57111–01681 (Colombia) (individual) [SDNTK]

MOLINA MOLINA, Jesus Dagoberto, c/o TRANSPORTES MICHAEL LTDA., Barranquilla, Colombia; c/o COOPERATIVA DE SERVICIO DE TRANSPORTE DE CARGA MULTIMODAL, Barranquilla, Colombia; POB Colombia; Cedula No. 8233532 (Colombia) (individual) [SDNT]

MOLINA QUINTAN, Leticia, c/o DISFOGEN LTDA., Bogota, Colombia; Cedula No. 24718126 (Colombia) (individual) [SDNT]

MOMBESHORA, Swithun; DOB 20 Aug 1945; Former Minister of Higher Education; Deceased (individual) [ZIMBABWE]

MONDRAGON AVILA, Alicia, c/o INVERSIONES Y DISTRIBUCIONES A M M LTDA., Cali, Colombia; c/o INVERSIONES Y CONSTRUCCIONES COSMOVALLE LTDA., Cali, Colombia; c/o ALERO S.A., Cali, Colombia; c/o INVERSIETE S.A., Cali, Colombia; DOB 26 Oct 1936; Cedula No. 29086016 (Colombia) (individual) [SDNT]

MONDRAGON DE RODRIGUEZ, Mariela, c/o CORPORACION DEPORTIVA AMERICA, Cali, Colombia; c/o MARIELA MONDRAGON DE R. Y CIA. S. EN C., Cali, Colombia; c/o LABORATORIOS KRESSFOR DE COLOMBIA S.A., Bogota, Colombia; c/o COMPAX LTDA., Cali, Colombia; c/o CREDIREBAJA S.A., Cali, Colombia; c/o INVERSIONES Y DISTRIBUCIONES A M M LTDA., Cali, Colombia; c/o MARIELA DE RODRIGUEZ Y CIA. S. EN C., Cali, Colombia; c/o INVERSIONES Y CONSTRUCCIONES COSMOVALLE LTDA., Cali, Colombia; c/o INVERSIONES MONDRAGON Y CIA. S.C.S., Cali, Colombia; DOB 12 Apr 1935; Cedula No. 29072613 (Colombia); Passport 4436059 (Colombia) (individual) [SDNT]

MONET TRADING COMPANY, Panama [CUBA]

MONROY ARCILA, Francisco Jose, c/o COMPANIA ADMINISTRADORA DE VIVIENDA S.A., Cali, Colombia; c/o INVERSIONES EL PENON S.A., Cali, Colombia; c/o CONSTRUCTORA DIMISA LTDA., Cali, Colombia; c/o INVERSIONES GEMINIS S.A., Cali, Colombia; DOB 2 Aug 1942; Cedula No. 79153691 (Colombia) (individual) [SDNT]

MONSALVE HERNANDEZ, Laris, c/o COMERCIALIZADORA DE PRODUCTOS FARMACEUTICOS LTDA., Ibague, Colombia; c/o MATERIAS PRIMAS Y SUMINISTROS S.A., Bogota, Colombia; DOB 10 Apr 1953; Cedula No. 41590169 (Colombia); Passport 41590169 (Colombia) (individual) [SDNT]

MONSALVO RUIZ, Elkin Miguel, c/o CAJA SOLIDARIA, Bogota, Colombia; c/o LITOPHARMA, Barranquilla, Colombia; c/o COPSERVIR LTDA., Bogota, Colombia; Calle 35B No. 17–143, Barranquilla, Colombia; Cedula No. 72186915 (Colombia) (individual) [SDNT]

MONTALVO GUZMAN, Luis Federico, c/o COPSERVIR LTDA., Bogota, Colombia; Cedula No. 14953049 (Colombia) (individual) [SDNT]

MONTANEZ, Michael, Panama (individual) [CUBA]

MONTANO ALVAREZ, Luis Hernando, Carrera 16A No. 33D–20, Cali, Colombia; c/o GRANJA LA SIERRA LTDA., Cali, Colombia; Cedula No. 16671124 (Colombia); Passport 16671124 (Colombia) (individual) [SDNT]

MONTANO BERMUDEZ, Libardo, c/o LABORATORIOS GENERICOS VETERINARIOS, Bogota, Colombia; DOB 4 Jul 1942; Cedula No. 17083296 (Colombia) (individual) [SDNT]

MONTANO PACHON, Marlen, c/o COOPERATIVA DE TRABAJO ASOCIADO ACTIVAR, Bogota, Colombia; c/o COOPCREAR, Bogota, Colombia; c/o COOPERATIVA MULTIACTIVA DE COLOMBIA FOMENTAMOS, Bogota, Colombia; Cedula No. 52492258 (Colombia) (individual) [SDNT]

MONTERO MARTINEZ, Rafael Antonio, c/o COPSERVIR LTDA., Bogota, Colombia; c/o SU SERVICIO SOCIEDAD LTDA., Barranquilla, Colombia; c/o CAJA SOLIDARIA, Bogota, Colombia; Cedula No. 8778405 (Colombia) (individual) [SDNT]

MONTES OCAMPO, Jose Alberto, c/o AGRICOLA DOIMA DEL NORTE DEL VALLE LTDA., Cartago, Valle, Colombia; c/o GANADERIA EL VERGEL LTDA., Cartago, Valle, Colombia; c/o GANADERIAS BILBAO LTDA., Cartago, Valle, Colombia; Carrera 4 No. 12–20 of. 206, Cartago, Valle, Colombia; DOB 24 Feb 1965; Cedula No. 79339330 (Colombia); Passport 79339330 (Colombia) (individual) [SDNT]

MONTOYA LUNA E HIJOS Y CIA. S.C.S., Carrera 85B No. 13A–136, Cali, Colombia; NIT # 800077316–5 (Colombia) [SDNT]

MONTOYA MARTINEZ, Juan Carlos, c/o AGROPECUARIA BETANIA LTDA., Cali, Colombia; c/o INVERSIONES VILLA PAZ S.A., Cali, Colombia; c/o INDUSTRIA AVICOLA PALMASECA S.A., Cali, Colombia; c/o AGROPECUARIA LA ROBLEDA S.A., Cali, Colombia; DOB 11 Oct 1966; Cedula No. 16801475 (Colombia) (individual) [SDNT]

MONTOYA SANCHEZ, Diego Leon, c/o MONTOYA LUNA E HIJOS Y CIA. S.C.S., Cali, Colombia; c/o INVERSIONES LA QUINTA Y CIA. LTDA., Cali, Colombia; Diagonal 27 No. 27–104, Cali, Colombia; c/o LADRILLERA LA CANDELARIA LTDA., Cali, Colombia; DOB 11 Jan 1958; POB Trujillo, Valle, Colombia; Cedula No. 16348515 (Colombia); Passport 16348515 (Colombia) (individual) [SDNT]

MONTOYA SANCHEZ, Eugenio (a.k.a. CARVAJAL TAFURT, Hector Fabio), Calle 7 No. 45–25, Cali, Colombia; Diagonal 27 No. 27–104, Cali, Colombia; c/o LADRILLERA LA CANDELARIA LTDA., Cali, Colombia; DOB 17 Apr 1970; alt. DOB 15 Apr 1972; POB Trujillo, Valle, Colombia; Cedula No. 94307307 (Colombia); alt. Cedula No. 16836750 (Colombia); Passport 94307307 (Colombia); alt. Passport 16836750 (Colombia); alt. Passport AC814028 (Colombia) (individual) [SDNT]

MONTOYA SANCHEZ, Juan Carlos, Carrera 85B No. 13A–136, Cali, Colombia; c/o MONTOYA LUNA E HIJOS Y CIA. S.C.S., Cali, Colombia; DOB 3 Sep 1962; POB Riofrio, Valle, Colombia; Cedula No. 16357049 (Colombia); Passport 16357049 (Colombia) (individual) [SDNT]

MOONEX INTERNATIONAL, S.A., Kingston, Jamaica [CUBA]

MOONEX INTERNATIONAL, S.A., Panama [CUBA]

MOR ALFOMBRAS ALFOFIQUE S.A. (f.k.a. ALFOFIQUE LTDA.; f.k.a. ALFOFIQUE TRANSPORTES LTDA.), Carrera 40 No. 169–32, Bogota, Colombia; NIT # 830081048–0 (Colombia) [SDNT]

MOR GAVIRIA Y CIA. S.C.S. SOCIEDAD DE COMERCIALIZACION INT C.I. (f.k.a. MOR GAVIRIA Y CIA. S.C.S.), Carrera 63 No. 17–07, Bogota, Colombia; NIT # 860535567–0 (Colombia) [SDNT]

MOR GAVIRIA, Jaime, c/o DURATEX S.A., Bogota, Colombia; c/o SUPER BOYS GAMES LTDA., Bogota, Colombia; c/o GAVIRIA MOR Y CIA. LTDA., Girardot, Colombia; c/o MOR GAVIRIA Y CIA. S.C.S., Bogota, Colombia; c/o MOR ALFOMBRAS ALFOFIQUE S.A., Bogota, Colombia; c/o PROMOCIONES E INVERSIONES LAS PALMAS S.A., Bogota, Colombia; DOB 27 Sep 1980; POB Colombia; Cedula No. 11203386 (Colombia); Passport AG443304 (Colombia) (individual) [SDNT]

MOR SAAB, Jaime Dib (a.k.a. MOR, Jaime Div; a.k.a. ''JAIME MOORE''), c/o MOR GAVIRIA Y CIA. S.C.S., Bogota, Colombia; c/o CONSTRUCTORA AMERICA S.A., Bogota, Colombia; c/o ACUICOLA SANTA CATALINA S.A., Bogota, Colombia; c/o SUPER BOYS GAMES LTDA., Bogota, Colombia; c/o COMERCIALIZADORA MOR GAVIRIA S.A., Quito, Ecuador; c/o COMERCIALIZADORA MORDUR S.A., Quito, Ecuador; c/o GAVIRIA MOR Y CIA. LTDA., Girardot, Colombia; c/o CONSTRUCTORA IRAKA S.A., Bogota, Colombia; c/o MOR ALFOMBRAS ALFOFIQUE S.A., Bogota, Colombia; c/o MAYOR COMERCIALIZADORA LTDA., Bogota, Colombia; c/o INTERNACIONAL DE PROYECTOS INMOBILIARIOS IPI S.A., Quito, Ecuador; c/o INVERSIONES MPS S.A., Bogota, Colombia; c/o GERENCIA DE PROYECTOS Y SOLUCIONES LTDA., Bogota, Colombia; c/o PROMOCIONES E INVERSIONES LAS PALMAS S.A., Bogota, Colombia; c/o KARIAN LTDA., Bogota, Colombia; c/o DURATEX S.A., Bogota, Colombia; c/o PROYECTOS Y SOLUCIONES S.A., Bogota, Colombia; DOB 29 Apr 1955; POB Girardot, Cundinamarca, Colombia; Cedula No. 19222380 (Colombia); SSN 591–98–9689 (United States) (individual) [SDNT]

MOR SAAB, Soraya, c/o CONSTRUCTORA IRAKA S.A., Bogota, Colombia; c/o ACUICOLA SANTA CATALINA S.A., Bogota, Colombia; c/o PROYECTOS Y SOLUCIONES S.A., Bogota, Colombia; c/o DURATEX S.A., Bogota, Colombia; c/o MOR GAVIRIA Y CIA. S.C.S., Bogota, Colombia; c/o PROMOCIONES E INVERSIONES LAS PALMAS S.A., Bogota, Colombia; DOB 10 May 1959; POB Girardot, Cundinamarca, Colombia; Cedula No. 35461535 (Colombia) (individual) [SDNT]

MORA RICARDO, Daniel Alberto, c/o SOCIEDAD SUPERDEPORTES LTDA., Bogota, Colombia; c/o ABS HEALTH CLUB SA, Bogota, Colombia; Miami, FL; DOB 08 Jan 1965; citizen Colombia; nationality Colombia; Cedula No. 80408253 (Colombia); Driver's License No. M600161650080 (United States) issued 07 Apr 2006 expires 08 Jan 2011; SSN 027–68–4733 (United States) (individual) [SDNT]

MORA ROMERO, Gloria Isabel, c/o FARFALLA INVESTMENT S.A., Panama City, Panama; c/o PREMIER SALES S.A., Panama; Cedula No. 4–192–157 (Panama); alt. Cedula No. No. 4–194–157 (Panama) (individual) [SDNT]

MORALES CASTRILLON, Victor Hugo, c/o TAURA S.A., Cali, Colombia; Cedula No. 16620349 (Colombia) (individual) [SDNT]

MORALES ESPINAR, Carmen Rosa, c/o COLFARMA PERU S.A., Lima, Peru; DOB 9 Aug 1976; D.N.I. 10006822 (Peru) (individual) [SDNT]

MORALES LOAIZA, Edilma (a.k.a. ''CAROLINA''; a.k.a. ''GLADYS GOMEZ SOLANO''; a.k.a. ''MARIA OFELIA''; a.k.a. ''MARUCHA''), Colombia; DOB 29 Dec 1974; POB Lejanias, Meta, Colombia; citizen Colombia; nationality Colombia; Cedula No. 40356505 (Colombia) (individual) [SDNTK]

MORALES LUYO, Luis Jaime, c/o COLFARMA PERU S.A., Lima, Peru; LE Number 08195408 (Peru) (individual) [SDNT]

MORALES ROBLEDO, Nicolas Abdul, c/o AGRO MASCOTAS S.A., Bogota, Colombia; Cedula No. 16686544 (Colombia); Passport 16686544 (Colombia) (individual) [SDNT]

MORAN GUERRERO, Mario Fernando, c/o COINTERCOS S.A., Bogota, Colombia; c/o PENTA PHARMA DE COLOMBIA S.A., Bogota, Colombia; c/o PENTACOOP LTDA., Bogota, Colombia; c/o LABORATORIOS KRESSFOR, Bogota, Colombia; DOB 17 Mar 1965; Cedula No. 12983857 (Colombia) (individual) [SDNT]

MORCILLO TORRES, Gracia; DOB 15 Mar 1967; POB San Sebastian, Guipuzcoa Province, Spain; D.N.I. 72.439.052 (Spain); Member ETA (individual) [SDGT]

MORENO DAZA, Ricardo Alfredo, c/o GALAPAGOS S.A., Cali, Colombia; Carrera 38D No. 4B–57, Cali, Colombia; c/o TAURA S.A., Cali, Colombia; Cedula No. 16631400 (Colombia) (individual) [SDNT]

MORENO FERNANDEZ, Monica, Spain; c/o RUIZ DE ALARCON 12 S.L., Madrid, Spain; DOB 20 Apr 1963; citizen Colombia; nationality Colombia; Cedula No. 31903968 (Colombia); National Foreign ID Number X3881333Z (Spain); Passport AE613367 (Colombia); alt. Passport AG744728 (Colombia) (individual) [SDNT]

MORENO GOMEZ, Ingrid Del Carmen, c/o CAJA SOLIDARIA, Bogota, Colombia; c/o COPSERVIR LTDA., Bogota, Colombia; c/o LITOPHARMA, Barranquilla, Colombia; c/o COOMULCOSTA, Barranquilla, Colombia; Cedula No. 49741445 (Colombia) (individual) [SDNT]

MORENO MEDINA, Luis Ignacio, Calle Guadalupe Victoria 6, Colonia Lomas Hipodromo, Tijuana, Baja California, Mexico; c/o ADP, S.C., Tijuana, Baja California, Mexico; c/o Forpres, S.C., Tijuana, Baja California, Mexico; Avenida David Alfaro Siqueiros 2789–102, Colonia Zona Rio, Tijuana, Baja California, Mexico; c/o Gex Explore, S. de R.L. de C.V., Tijuana, Baja California, Mexico; c/o Accesos Electronicos, S.A. de C.V., Tijuana, Baja California, Mexico; c/o Farmacia Vida Suprema, S.A. DE C.V., Tijuana, Baja California, Mexico; c/o Distribuidora Imperial De Baja California, S.A. de C.V., Tijuana, Baja California, Mexico; Calle Guadalupe Victoria 9, Colonia Lomas Hipodromo, Tijuana, Baja California, Mexico; Avenida de las Americas 3048, Fraccionamiento El Paraiso, Tijuana, Baja California, Mexico; c/o Administradora De Inmuebles Vida, S.A. de C.V., Tijuana, Baja California, Mexico; c/o Operadora Valpark, S.A. de C.V., Tijuana, Baja California, Mexico; c/o Valpark, S.A. de C.V., Tijuana, Baja California, Mexico; DOB 26 May 1953; POB Distrito Federal, Mexico; Passport 96020025125 (Mexico); alt. Passport ATIJ07154 (Mexico); R.F.C. MOML–530526-ED4 (Mexico) (individual) [SDNTK]

MORENO MUNOZ, Liliana Judith, c/o CAJA SOLIDARIA, Bogota, Colombia; c/o SU SERVICIO SOCIEDAD LTDA., Barranquilla, Colombia; Carrera 6 No. 72–68, Barranquilla, Colombia; c/o COPSERVIR LTDA., Bogota, Colombia; c/o LITOPHARMA, Barranquilla, Colombia; Cedula No. 32751536 (Colombia) (individual) [SDNT]

MORENO, Carlos Arturo, c/o INVERSIONES EL PENON S.A., Cali, Colombia; Cedula No. 14264233 (Colombia) (individual) [SDNT]

MORINA, Xhavit; DOB 13 Sep 1963; POB Drenovc (individual) [BALKANS]

MOROCCAN ISLAMIC COMBATANT GROUP (a.k.a. GICM; a.k.a. GROUPE ISLAMIQUE COMBATTANT MAROCAIN) [SDGT]

MOSCOSO MONTES, Nelly Fabiola, c/o CODISA, Bogota, Colombia; c/o ADMACOOP, Bogota, Colombia; c/o FARMACOOP, Bogota, Colombia; DOB 5 May 1964; Cedula No. 51740771 (Colombia); Passport 51740771 (Colombia) (individual) [SDNT]

MOSQUERA MAYA, Maria Alejandra (a.k.a. SANTACOLOMA, Maria Alejandra), 14420 NW 16th St., Pembroke Pines, FL 33028; c/o ASH TRADING, INC., Pembroke Pines, FL; DOB 22 Sep 1973; Cedula No. 34564670 (Colombia); Passport 34564670 (Colombia) (individual) [SDNT]

MOSQUERA, Juan Carlos, Avenida 2 Norte No. 7N–55 of. 601, Cali, Colombia; Calle 24N No. 6–17, Cali, Colombia; c/o INMOBILIARIA U.M.V. S.A., Cali, Colombia; Cedula No. 16692007 (Colombia) (individual) [SDNT]

MOSTAFA, Mohamed Amin,, Via della Martinella 132, Parma, Italy; DOB 11 Oct 1975; POB Karkuk, Iraq; nationality Iraq; Kurdish; arrested 31 Mar 2003 (individual) [SDGT]

MOTEL MOMENTOS E.U., Carrera 22 No. 8–71, Cartago, Valle, Colombia; NIT # 900089381–9 (Colombia) [SDNT]

MOUMOU, Mohamed (a.k.a. MUMU, Mohamed; a.k.a. ''ABDALLAH, Abu''; a.k.a. ''ABDERRAHMAN, Abou''; a.k.a. ''AMINA, Abu''; a.k.a. ''SHRAYDA, Abu''), Trodheimsgatan 6, 164 32 Kista, Sweden; Dobelnsgatan 97, 7TR C/O Lamrabet, 113 52 Stockholm, Sweden; London, United Kingdom; Storvretsvagen 92, 7 TR. C/O Drioua, 142 31 Skogas, Sweden; Jungfruns

Gata 413; Postal Address Box: 3027, 13603 Haninge, Sweden; DOB 30 Jul 1965; alt. DOB 30 Sep 1965; POB Fez, Morocco; citizen Morocco; alt. citizen Sweden; Passport 9817619 (Sweden) expires 14 Dec 2009 (individual) [SDGT]

MOUSTFA, Djamel (a.k.a. KALED, Belkasam; a.k.a. ''ALI BARKANI''; a.k.a. ''MOUSTAFA''), c/o Birgit Melani Schroeder, Kuehlungsborner Strasse 30, Hamburg 22147, Germany; DOB 28 Sep 1973; alt. DOB 31 Dec 1979; alt. DOB 22 Aug 1973; POB Tiaret, Algeria; alt. POB Morocco; nationality Algeria; arrested 23 Apr 2002; currently in remand at 20355 Hamburg Holstenglacis 3, Germany (individual) [SDGT]

MOVEMENT FOR ISLAMIC REFORM IN ARABIA (a.k.a. AL-HARAKAT AL-ISLAMIYAH LIL-ISLAH; a.k.a. AL-ISLAH; a.k.a. ISLAMIC MOVEMENT FOR REFORM; a.k.a. MIRA; a.k.a. MOVEMENT FOR REFORM IN ARABIA), BM Box: MIRA, London WC1N 3XX, United Kingdom; 21 Blackstone Road, London NW2 6DA, United Kingdom; Safiee Suite, EBC House, Townsend Lane, London NW9 8LL, United Kingdom; UK Company Number 03834450 (United Kingdom) [SDGT]

MOYO, Jonathan Nathaniel; DOB 12 Jan 1957; Passport AD000432 (Zimbabwe); Member of Parliament for Tsholotsho & Former Minister of Information and Publicity (individual) [ZIMBABWE]

MOYO, Simon Khaya; DOB 1 Oct 1945; Passport ZD001512 (Zimbabwe); Politburo Member (individual) [ZIMBABWE]

MPANO, Douglas (a.k.a. MPAMO, Douglas Iruta); DOB 28 Dec 1965; alt. DOB 29 Dec 1965; POB Goma, Democratic Republic of the Congo; Manager, Great Lakes Business Company and Compagnie Aerienne des Grands Lacs (individual) [DRCONGO]

MPOFU, Obert Moses; DOB 12 Oct 1951; Passport ZD001549 (Zimbabwe); Deputy Secretary for National Security (individual) [ZIMBABWE]

MRDJA, Darko; DOB 28 Jun 1967; POB Zagreb, Croatia; ICTY indictee (individual) [BALKANS]

MRKSIC, Milan; DOB 20 Jul 1947; POB Vrginmost, Croatia; ICTY indictee in custody (individual) [BALKANS]

MSALAM, Fahid Mohammed Ally (a.k.a. AL-KINI, Usama; a.k.a. ALLY, Fahid Mohammed; a.k.a. MSALAM, Fahad Ally; a.k.a. MSALAM, Fahid Mohammed Ali; a.k.a. MSALAM, Mohammed Ally; a.k.a. MUSALAAM, Fahid Mohammed Ali; a.k.a. SALEM, Fahid Muhamad Ali); DOB 19 Feb 1976; POB Mombasa, Kenya; citizen Kenya (individual) [SDGT]

MSIKA, Joseph; DOB 6 Dec 1923; Passport ZD001610 (Zimbabwe); First Vice President (individual) [ZIMBABWE]

MSIPA, Cephas George; DOB 7 Jul 1931; Passport ZD001500 (Zimbabwe); Midlands Provincial Governor (individual) [ZIMBABWE]

MSIPA, Sharlottie; DOB 6 May 1936; Passport ZL008055 (Zimbabwe); Spouse of Cephas Msipa (individual) [ZIMBABWE]

MUBARAK, Umid Medhat (a.k.a. MUBARAK, Umid Midhat), Iraq; DOB circa 1940; Former Minister of Health (individual) [IRAQ2]

MUCHENA, Olivia Nyembezi, 59 The Chase, Mount Pleasant, Harare, Zimbabwe; DOB 18 Aug 1946; Passport AD000086 (Zimbabwe); Minister of State for Science and Technology Development (individual) [ZIMBABWE]

MUCHINGURI, Natasha, 2 Tender Road, Highlands, Harare, Zimbabwe; DOB circa 1994; Child of Oppah Muchinguri (individual) [ZIMBABWE]

MUCHINGURI, Oppah Chamu Zvipange, 15 Moorherist Avenue, Harare, Zimbabwe; DOB 14 Dec 1958; Minister of Women's Affairs, Gender and Community Development (individual) [ZIMBABWE]

MUCHINGURI, Tanya, 2 Tender Road, Highlands, Harare, Zimbabwe; DOB circa 1989; Child of Oppah Muchinguri (individual) [ZIMBABWE]

MUCIC, Zdravko; DOB 31 Aug 1955; ICTY indictee (individual) [BALKANS]

MUDACUMURA, Sylvestre (a.k.a. COMMANDANT PHARAON; a.k.a. MUKANDA; a.k.a. MUPENZI, Bernard; a.k.a. MUPENZI, General Pierre Bernard; a.k.a. RADJA), Kibua, North Kivu, Congo, Democratic Republic of the; DOB 1955; POB Karago, Western Province, Rwanda; citizen Rwanda; Major General; Commander FDLR/FOCA (individual) [DRCONGO]

MUDENGE, Isack Stan Gorerazvo, 31 St. Brelades Road, Borrowdale, Harare, Zimbabwe; DOB 17 Dec 1948; Passport AD000964 (Zimbabwe); Minister of Higher and Tertiary Education (individual) [ZIMBABWE]

MUGABE, Grace; DOB 23 Jul 1965; Passport AD001159 (Zimbabwe); Spouse of Robert Mugabe (individual) [ZIMBABWE]

MUGABE, Leo (a.k.a. CDE MUGABE), 72 Green Groove Drive, Greendale, Harare, Zimbabwe; DOB 28 Feb 1957; alt. DOB 28 Aug 1962; MP for Makonde; Son of Sabina MUGABE; Nephew of Robert MUGABE (individual) [ZIMBABWE]

MUGABE, Robert Gabriel; DOB 21 Feb 1924; Passport AD002119 (Zimbabwe); President of the Republic of Zimbabwe (individual) [ZIMBABWE]

MUGABE, Sabina; DOB 14 Oct 1934; Politburo Senior Committee Member (individual) [ZIMBABWE]

MUGHNIYAH, Imad Fa'iz (a.k.a. MUGHNIYAH, Imad Fayiz); DOB 07 Dec 1962; POB Tayr Dibba, Lebanon; Passport 432298 (Lebanon); Senior Intelligence Officer of HIZBALLAH (individual) [SDT] [SDGT]

MUGICA GONI, Ainhoa; DOB 27 Jun 1970; POB San Sebastian, Guipuzcoa Province, Spain; D.N.I. 34.101.243 (Spain); Member ETA (individual) [SDGT]

MUGUTI, Edwin, 7 Tay Road, Vainona, Borrowdale, Zimbabwe; DOB 2 May 1964; Passport AN775556 (Zimbabwe); Deputy Minister of Health and Child Welfare (individual) [ZIMBABWE]

MUHAMMAD, Sirajuddin Haqqani Jalaluddin Khwasa (a.k.a. HAQANI, Saraj; a.k.a. HAQANI, Siraj; a.k.a. HAQANI, Sirajuddin; a.k.a. HAQQANI, Saraj; a.k.a. HAQQANI, Siraj; a.k.a. HAQQANI, Sirajuddin), Manba'ul uloom Madrasa, Miramshah, North Waziristan, FATA, NWFP, Pakistan; Dergey Manday Madrasa (North of Miramsha), North Waziristan, FATA, NWFP, Pakistan; Kela neighborhood/Danda neighborhood (2 km NW from Miramshah town), Pakistan; DOB 1977; alt. DOB 1970; alt. DOB 1978; POB Danda, Miramshah, Afghanistan; alt. POB Srana Village, Garda Saray District, Paktya Province, Afghanistan; alt. POB Neka District, Paktika, Afghanistan; alt. POB Khowst Province, Afghanistan (individual) [SDGT]

MUJAHEDIN-E KHALQ ORGANIZATION (a.k.a. MEK; a.k.a. MKO; a.k.a. MUJAHEDIN-E KHALQ; a.k.a. MUSLIM IRANIAN STUDENT'S SOCIETY; a.k.a. NATIONAL COUNCIL OF RESISTANCE; a.k.a. NATIONAL COUNCIL OF RESISTANCE (NCR); a.k.a. NATIONAL COUNCIL OF RESISTANCE OF IRAN; a.k.a. NCRI; a.k.a. NLA; a.k.a. ORGANIZATION OF THE PEOPLE'S HOLY WARRIORS OF IRAN; a.k.a. PEOPLE'S MUJAHEDIN ORGANIZATION OF IRAN; a.k.a. PMOI; a.k.a. SAZEMAN-E MUJAHEDIN-E KHALQ-E IRAN; a.k.a. THE NATIONAL LIBERATION ARMY OF IRAN) [FTO] [SDGT]

MUJURU, Joyce Teurai Ropa; DOB 15 Apr 1955; Second Vice President (individual) [ZIMBABWE]

MUJURU, Solomon Tapfumaneyi Ruzambo (a.k.a. ''NANGO, Rex''); DOB 1 May 1949; Passport ZD001348 (Zimbabwe); Politburo Senior Committee Member (individual) [ZIMBABWE]

MUJYAMBERE, Leopold (a.k.a. ACHILLE; a.k.a. IBRAHIM, Frere Petrus; a.k.a. MUSENYERI), Mwenga, South Kivu Province, Congo, Democratic Republic of the; DOB 17 Mar 1962; alt. DOB 1966; POB Kigali, Rwanda; citizen Rwanda; Colonel; Commander, FDLR CO 2nd Division (individual) [DRCONGO]

MULTICAJA DE TIJUANA, S.A. DE C.V. (f.k.a. CASA DE CAMBIO DEL OESTE), Calle 3 y Madero, Zona Centro, Tijuana, Baja California, Mexico; Blvd. Insurgentes 2120, Porvenir, Tijuana, Baja California, Mexico; Avenida Lazaro Cardenas 1702 18, Otay Constituyentes, Tijuana, Baja California, Mexico; Carrillo Puerto, Calle 291, Zona Central, Tijuana, Baja California, Mexico; Insurg-Campos S/N BCO., Insurgentes, Tijuana, Baja California, Mexico; Centro Comercial Otay, Tijuana, Baja California, Mexico; 3A. y Madero, 291, Zona Centro, Tijuana, Baja California, Mexico; R.F.C. MTI–920115-RR6 (Mexico) [SDNTK]

MULTISERVICIOS AGSA, S.A. DE C.V., Boulevard Agua Caliente No. 148, Revolucion, Tijuana, Baja California, Mexico; R.F.C. MAG941123BYA (Mexico) [SDNTK]

MULTISERVICIOS ALPHA, S.A. DE C.V., Paseo Playas 24–2, Colonia Playas de Tijuana, Tijuana, Baja California, Mexico; Av. Allende 1197, Colonia Independencia, Tijuana, Baja California, Mexico; R.F.C. MAL-960401-I35 (Mexico) [SDNTK]

MULTISERVICIOS BRAVIO, S.A. DE C.V. (a.k.a. BRAVIO ARMORED GROUP), Av. Via Rapida 26, Colonia Zona Rio, Tijuana, Baja California, Mexico; Local C–25 Plaza Rio, Colonia Zona Rio, Tijuana, Baja California, Mexico; R.F.C. MBR–961115–4M6 (Mexico) [SDNTK]

MULTISERVICIOS DEL NOROESTE DE MEXICO, S.A. DE C.V., Tijuana, Baja California, Mexico [SDNTK]

MULTISERVICIOS GAMAL, S.A. DE C.V. (a.k.a. CASA DE CAMBIO RUBI), Paseo Playas 24–2, Colonia Playas de Tijuana, Tijuana, Mexico, Mexico; Blvd. Fundadores 5343–22, Colonia El Rubi, Tijuana, Baja California CP 22180, Mexico; Av. Federico Benitez 6400–52, Colonia Yamille, Tijuana, Baja California, Mexico; Paseo Estrella Del Mar 359, Colonia Playas de Tijuana, Tijuana, Baja California CP 22200, Mexico; Paseo Ensenada S/N D11, Colonia Playas de Tijuana, Tijuana, Baja California, Mexico; R.F.C. MGA–940615-SC3 (Mexico) [SDNTK]

MULTISERVICIOS JEVIZ S.A. DE C.V. (a.k.a. JEVIZ), Carretera a El Dorado # 2501, Colonia Campo El Diez, Culiacan, Sinaloa 80155, Mexico [SDNTK]

MULTISERVICIOS SIGLO, S.A. DE C.V., Carretera Aeropuerto 1900–16G, Colonia Otay, Tijuana, Baja California, Mexico; Paseo Tijuana 10126-A, Colonia Zona Rio, Tijuana, Baja California, Mexico; R.F.C. MSI–960220–Q84 (Mexico) [SDNTK]

MUMBENGEGWI, Samuel Simbarashe Simbanenduku, 22 Stour Road, Vainona, Borrowdale, Harare, Zimbabwe; DOB 20 July 1945; Non-Constituency Member of Parliament (individual) [ZIMBABWE]

MUNANDAR, Aris; DOB 1 Jan 1971; alt. DOB 1962; alt. DOB 1967; alt. DOB 1964; alt. DOB 1966; alt. DOB 1965; alt. DOB 1968; alt. DOB 1963; POB Sambi, Boyolali, Java, Indonesia (individual) [SDGT]

MUNERA FERNANDEZ, Pablo Jesus, c/o CAJA SOLIDARIA, Bogota, Colombia; c/o COOMULCOSTA, Barranquilla, Colombia; c/o COPSERVIR LTDA., Bogota, Colombia; Cedula No. 8719504 (Colombia) (individual) [SDNT]

MUNOA ORDOZGOITI, Alona; DOB 6 Jul 1976; POB Segura, Guipuzcoa Province, Spain; D.N.I. 35.771.259 (Spain); Member ETA (individual) [SDGT]

MUNOZ CORTES, Julio Cesar (a.k.a. MUNOZ CORTEZ, Julio Cesar), c/o DISTRIBUIDORA DE DROGAS CONDOR LTDA., Bogota, Colombia; c/o COPSERVIR LTDA., Bogota, Colombia; c/o BLANCO PHARMA S.A., Bogota, Colombia; c/o DROGAS LA REBAJA BARRANQUILLA S.A., Barranquilla, Colombia; c/o DROGAS LA REBAJA CALI S.A., Cali, Colombia; c/o DROGAS LA REBAJA PRINCIPAL S.A., Bogota, Colombia; DOB 26 Feb 1947; Cedula No. 14938700 (Colombia) (individual) [SDNT]

MUNOZ NARVAEZ, Yamileth, c/o COOPERATIVA MULTIACTIVA DE COLOMBIA FOMENTAMOS, Bogota, Colombia; c/o COMERCIALIZADORA INTERTEL S.A., Cali, Colombia; c/o DISTRIBUIDORA SANAR DE COLOMBIA S.A., Cali, Colombia; DOB 30 Dec 1970; Cedula No. 66825769 (Colombia); Passport 66825769 (Colombia) (individual) [SDNT]

MUNOZ PAZ, Adriana del Socorro, c/o INVERSIONES Y CONSTRUCCIONES VALLE S.A., Cali, Colombia; DOB 1 Oct 1966; Cedula No. 31950689 (Colombia) (individual) [SDNT]

MUNOZ PAZ, Joaquin Emilio, c/o CONSTRUCTORA DIMISA LTDA., Cali, Colombia; c/o INVERSIONES Y CONSTRUCCIONES VALLE S.A., Cali, Colombia; c/o INMOBILIARIA U.M.V. S.A., Cali, Colombia; Avenida 4AN No. 47–89, Cali, Colombia; DOB 18 Jan 1971; Cedula No. 16789012 (Colombia) (individual) [SDNT]

MUNOZ RODRIGUEZ, Juan Carlos, c/o CREDIREBAJA S.A., Cali, Colombia; c/o DISTRIBUIDORA DE DROGAS CONDOR LTDA., Bogota, Colombia; c/o REPRESENTACIONES Y DISTRIBUCIONES HUERTAS Y ASOCIADOS S.A., Bogota, Colombia; c/o GRACADAL S.A., Cali, Colombia; c/o DISTRIBUIDORA MIGIL LTDA., Cali, Colombia; c/o DISTRIBUIDORA DE DROGAS LA REBAJA S.A., Bogota, Colombia; c/o LATINFAMRACOS S.A., Quito, Ecuador; c/o ASESORIAS ECONOMICAS MUNOZ SANTACOLOMA E.U., Cali, Colombia; c/o DISTRIBUIDORA SANAR DE COLOMBIA S.A., Cali, Colombia; c/o COMERCIALIZADORA INTERTEL S.A., Cali, Colombia; c/o BLANCO PHARMA S.A., Bogota, Colombia; c/o ASPOIR DEL PACIFICO Y CIA. LTDA., Cali, Colombia; c/o LABORATORIOS BLAIMAR DE COLOMBIA S.A., Bogota, Colombia; c/o DEPOSITO POPULAR DE DROGAS S.A., Cali, Colombia; c/o FUNDASER, Cali, Colombia; c/o CONTACTEL COMUNICACIONES S.A., Cali, Colombia; c/o INVERSIONES Y CONSTRUCCIONES ABC S.A., Cali, Colombia; c/o LABORATORIOS KRESSFOR DE COLOMBIA S.A., Bogota, Colombia; DOB 25 Sep 1964; Cedula No. 16703148 (Colombia); Passport 16703148 (Colombia) (individual) [SDNT]

MUNOZ RODRIGUEZ, Soraya, c/o LATINFAMRACOS S.A., Quito, Ecuador; c/o DISTRIBUIDORA MIGIL LTDA., Cali, Colombia; c/o RADIO UNIDAS FM S.A., Cali, Colombia; c/o INVERSIONES Y CONSTRUCCIONES ABC S.A., Cali, Colombia; c/o DEPOSITO POPULAR DE DROGAS S.A., Cali, Colombia; c/o FUNDASER, Cali, Colombia; c/o DISTRIBUIDORA DE DROGAS CONDOR LTDA., Bogota, Colombia; c/o LABORATORIOS KRESSFOR DE COLOMBIA S.A., Bogota, Colombia; c/o DISTRIBUIDORA DE DROGAS LA REBAJA S.A., Bogota, Colombia; c/o LABORATORIOS BLAIMAR DE COLOMBIA S.A., Bogota, Colombia; c/o SORAYA Y HAYDEE LTDA., Cali, Colombia; c/o 2000-DODGE S.L., Madrid, Spain; c/o BLANCO PHARMA S.A., Bogota, Colombia; DOB 26 Jun 1967; Cedula No. 31976822 (Colombia); Passport AC569012 (Colombia) (individual) [SDNT]

MUNOZ Y RODRIGUEZ Y CIA. LTDA., Avenida 6N No. 23DN–26, Cali, Colombia [SDNT]

MURAD, Abdul Hakim (a.k.a. AHMED, Saeed; a.k.a. AKMAN, Saeed; a.k.a. MURAD, Abdul Hakim Al Hashim; a.k.a. MURAD, Abdul Hakim Hasim; a.k.a. MURAD, Adbul Hakim Ali Hashim); DOB 4 Jan 1968; POB Kuwait; nationality Pakistan; currently incarcerated in the U.S. (individual) [SDGT]

MURERWA, Herbert Muchemwa; DOB 31 July 1941; Passport AD001167 (Zimbabwe); Minister of Finance (individual) [ZIMBABWE]

MURERWA, Ruth Chipo, 321 Ard-Na-Lea Close, Glen Lorne, Chisipite, Zimbabwe; DOB 27 Jul 1947; Passport AD001244 (Zimbabwe) expires 19 Aug 2009; Spouse of Herbert Murerwa (individual) [ZIMBABWE]

MURILLO BEJARANO, Diego Fernando (a.k.a. ''ADOLFO PAZ''; a.k.a. ''DON BERNA''); DOB 23 Feb 1961; Cedula No. 16357144 (Colombia) (individual) [SDNTK]

MURILLO MURILLO, Jose Tolentino, c/o AGROPECUARIA LA ROBLEDA S.A., Cali, Colombia; Cedula No. 2240779 (Colombia) (individual) [SDNT]

MURWANASHYAKA, Ignace; DOB 14 May 1963; POB Nogoma-Butera, Rwanda; President, Forces Democratiques pour la Liberation du Rwanda (FDLR) (individual) [DRCONGO]

MUSA, Rifa'i Ahmad Taha (a.k.a. 'ABD ALLAH, 'Issam 'Ali Muhammad; a.k.a. 'ABD-AL-'IZ; a.k.a. ABD-AL-WAHAB, Abd-al-Hai Ahmad; a.k.a. ABU YASIR; a.k.a. AL-KAMEL, Salah 'Ali; a.k.a. TAHA MUSA, Rifa'i Ahmad; a.k.a. THABIT 'IZ); DOB 24 Jun 1954; POB Egypt; Passport 1046403 (Egypt); alt. Passport 83860 (Sudan); alt. Passport 30455 (Egypt) (individual) [SDT]

MUSHOHWE, Christopher Chindoti; DOB 6 Feb 1954; Minister of Transport and Communications (individual) [ZIMBABWE]

MUSLIU, Isak; DOB 31 Oct 1970; POB Racak, Serbia and Montenegro (individual) [BALKANS]

MUSLIU, Jonuz; DOB 5 Jan 1959; POB Konculj, Serbia and Montenegro (individual) [BALKANS]

MUSLIU, Shefqet; DOB 12 Feb 1963; POB Konculj, Serbia and Montenegro (individual) [BALKANS]

MUSONI, Straton; DOB 6 Apr 1961; alt. DOB 4 Jun 1961; POB Mugambazi, Kigali; citizen Rwanda; nationality Rwanda (individual) [DRCONGO]

MUSTAFA BAKRI, Ali Sa'd Muhammad (a.k.a. AL-MASRI, Abd Al-Aziz); DOB 18 Apr 1966; nationality Egypt (individual) [SDGT]

MUSTAFA, Rrustem; DOB 27 Feb 1971; POB Podujevo, Serbia and Montenegro (individual) [BALKANS]

MUTASA, Didymus Noel Edwin; DOB 27 July 1935; Minister of State for National Security (individual) [ZIMBABWE]

MUTEZO, Munacho Thomas Alvar, 950 Sugarloaf Hill, Glen Lorne, Zimbabwe; DOB 14 Feb 1954; Passport AN187189 (Zimbabwe) expires 5 Dec 2010; Minister of Water Resources and Infrastructural Development (individual) [ZIMBABWE]

MUTINHIRI, Ambrose; DOB 22 Feb 1944; Passport AD000969 (Zimbabwe); Minister of Youth Development and Employment Creation (individual) [ZIMBABWE]

MUTIWEKUZIVA, Kenneth Keparadza; DOB 27 May 1948; Deputy Minister for Small and Medium Enterprise Development (individual) [ZIMBABWE]

MUVDY BERBESY, Salua Teresa, c/o CONSTRUCTORA PYNZAR LTDA., Cali, Colombia; c/o CIA. MINERA DAPA S.A., Bogota, Colombia; Avenida Las Americas

No. 21N–50 Ofc. 702, Cali, Colombia; c/o PARQUE INDUSTRIAL PROGRESO S.A., Yumbo, Colombia; DOB 30 Jan 1959; POB Barranquilla, Atlantico, Colombia; Cedula No. 32639757 (Colombia); Passport 32639757 (Colombia) (individual) [SDNT]

MUZENDA, Simon Vengesai; DOB 28 Oct 1922; Former Vice President; Deceased (individual) [ZIMBABWE]

MUZENDA, Tsitsi; DOB 22 Aug 1922; Politburo Senior Committee Member (individual) [ZIMBABWE]

MUZONZINI, Elisha; DOB 24 Jun 1957; Passport AD000648 (Zimbabwe); Former Director of the Central Intelligence Organization (individual) [ZIMBABWE]

MYANMA ECONOMIC BANK (a.k.a. MYANMAR ECONOMIC BANK), 1–19 Sule Pagoda Road, Pabedan T/S, Yangon, Burma [BURMA]

MYANMA FOREIGN TRADE BANK (a.k.a. MYANMAR FOREIGN TRADE BANK), P.O. Box 203, 80–86 Maha Bandoola Garden Street, Kyauktada T/S, Yangon, Burma; SWIFT/BIC FOTMMMM1 [BURMA]

MYANMA INVESTMENT AND COMMERCIAL BANK (a.k.a. MICB; a.k.a. MYANMAR INVESTMENT AND COMMERCIAL BANK), 170/176 Bo Aung Kyaw Street, Botataung Township, Yangon, Burma; SWIFT/BIC MYANMMM1; alt. SWIFT/BIC MICB MM MY (Burma); alt. SWIFT/BIC MICB MM MY MAN (Burma) [BURMA]

MYANMAR AVIA EXPORT COMPANY LIMITED (a.k.a. MYANMAR AVIA EXPORT) [BURMA]

MYANMAR ECONOMIC CORPORATION (a.k.a. MEC), 74–76 Shwedagon Pagoda Road, Dagon Township, Yangon, Burma [BURMA]

MYANMAR GEM ENTERPRISE (a.k.a. MGE; a.k.a. MYANMA GEM ENTERPRISE), 66 Kaba Aye Pagoda Road, Rangoon, Mayangone Township (MYGN), Burma [BURMA]

MYANMAR IMPERIAL JADE CO., LTD, 22 Sule Pagoda Road, Mayangone Township, Yangon, Burma [BURMA]

MYANMAR IVANHOE COPPER COMPANY LIMITED (a.k.a. MICCL; a.k.a. MONYWA JVCO; a.k.a. MYANMAR IVANHOE COPPER CO. LTD.), 70 (I) Bo Chein Street, Pyay Road, Hlaing Township, Yangon, Burma; Monywa, Sagaing Division, Burma; 70 (I) Bo Chein Street, 6.5 miles Pyay Road, Yangon, Burma [BURMA]

MYANMAR PEARL ENTERPRISE (a.k.a. MPE; a.k.a. MYANMA PEARL ENTERPRISE), No. 4345, Bu Khwe, Naypyitaw, Burma [BURMA]

MYANMAR RUBY ENTERPRISE CO. LTD. (a.k.a. MYANMAR RUBY ENTERPRISE), 24/26 Sule Pagoda Road, Kyauktada Township, Yangon, Burma [BURMA]

MYANMAR TIMBER ENTERPRISE (a.k.a. MTE; a.k.a. MYANMA TIMBER ENTERPRISE), P.O. Box 206, Mission Road/Ahlone Street, Rangoon, Burma [BURMA]

MYANMAR TREASURE RESORTS (a.k.a. MYANMAR TREASURE BEACH RESORT; a.k.a. MYANMAR TREASURE BEACH RESORTS; a.k.a. MYANMAR TREASURE RESORT (BAGAN); a.k.a. MYANMAR TREASURE RESORT (PATHEIN); a.k.a. ''MYANMAR TREASURE RESORT II''), No 56 Shwe Taung Gyar Road, Golden Valley, Bahan Township, Yangon, Burma; No. 41 Shwe Taung Gyar Street, Bahan Township, Yangon, Burma [BURMA]

MYAWADDY BANK LTD. (a.k.a. MYAWADDY BANK), 24/26 Sule Pagoda Road, Yangon, Burma [BURMA]

MYAWADDY TRADING LTD. (a.k.a. MYAWADDY TRADING CO.), 189–191 Maha Bandoola Street, Botataung P.O, Yangon, Burma [BURMA]

MYINT, Htay (a.k.a. MYINT, U Htay), Burma; DOB 6 Feb 1955; citizen Burma; nationality Burma; Chairman, Yuzana Company Limited (individual) [BURMA]

MYINT, Kyaw (a.k.a. MYINT, Kyaw, Dr.), Burma; DOB 1940; citizen Burma; nationality Burma; Minister of Health (individual) [BURMA]

MYINT, Li (a.k.a. HSING, Su; a.k.a. ''SU HSING''; a.k.a. ''U LI MYINT''), c/o HONG PANG GENERAL TRADING COMPANY, LIMITED, Kyaington, Burma; 525 Merchant Street, Rangoon, Burma; c/o HONG PANG MINING COMPANY LIMITED, Yangon, Burma; c/o HONG PANG TEXTILE COMPANY LIMITED, Yangon, Burma; c/o HONG PANG LIVESTOCK DEVELOPMENT COMPANY LIMITED, Burma; c/o HONG PANG GEMS & JEWELLERY COMPANY LIMITED, Burma; c/o HONG PANG ELECTRONIC INDUSTRY CO., LTD., Yangon, Burma; Tangyan, Burma; National ID No. 13/Ta Ta Na (Naing)019077 (Burma) (individual) [SDNTK]

MYINT, Tin Lin (a.k.a. MYINT, Daw Tin Lin); DOB 25 Jan 1947; wife of Ye Myint (individual) [BURMA]

MYINT, Ye; DOB 21 Oct 1943; citizen Burma; nationality Burma; Lieutenant-General; Chief, Military Affairs; Chief, Bureau of Special Operation 1; Member, State Peace and Development Council (individual) [BURMA]

MZOUDI, Abdelghani (a.k.a. MAZUTI, Abdelghani; a.k.a. MAZWATI, Abdelghani), Marienstrasse 54, Hamburg, Germany; Op de Wisch 15, Hamburg 21149, Germany; DOB 6 Dec 1972; POB Marrakech, Morocco; citizen Morocco; Moroccan Personal ID No. E 427689 (Morocco) issued 20 Mar 2001; Passport M271392 (Morocco) issued 04 Dec 2000; alt. Passport F 879567 (Morocco) issued 29 Apr 1992 (individual) [SDGT]

NADA INTERNATIONAL ANSTALT, Vaduz, Liechtenstein; formerly c/o Asat Trust reg., Vaduz, Liechtenstein [SDGT]

NADA MANAGEMENT ORGANIZATION SA (f.k.a. AL TAQWA MANAGEMENT ORGANIZATION SA), Viale Stefano Franscini 22, Lugano CH–6900 TI, Switzerland [SDGT]

NADA, Youssef (a.k.a. NADA, Youssef M.; a.k.a. NADA, Youssef Mustafa), Via Riasc 4, Campione d'Italia CH–6911, Switzerland; Via Arogno 32, Campione d'Italia 6911, Italy; Via Per Arogno 32, Campione d'Italia 6911, Switzerland; DOB 17 May 1931; alt. DOB 17 May 1937; POB Alexandria, Egypt; citizen Tunisia (individual) [SDGT]

NAIZAQUE PUENTES, Jose de Jesus, c/o COSMEPOP, Bogota, Colombia; Calle 58A S 80C–31, Bogota, Colombia; c/o LABORATORIOS BLAIMAR DE COLOMBIA S.A., Bogota, Colombia; c/o COINTERCOS S.A., Bogota, Colombia; DOB 12 Mar 1956; Cedula No. 19348370 (Colombia) (individual) [SDNT]

NAJI, Talal Muhammad Rashid; DOB 1930; POB Al Nasiria, Palestine; Principal Deputy of POPULAR FRONT FOR THE LIBERATION OF PALESTINE—GENERAL COMMAND (individual) [SDT]

NALETILIC, Mladen; DOB 1 Dec 1946; POB Listica, Bosnia-Herzegovina; ICTY indictee (individual) [BALKANS]

NAMAN, Saalim (a.k.a. NAMAN, Sam), P.O. Box 39, Fletchamstead Highway, Coventry, United Kingdom; Amman, Jordan; Iraq; 5903 Harper Road, Solon, OH; 3343 Woodview Lake Road, West Bloomfield, MI 48323 (individual) [IRAQ2]

NARVAEZ GONI, Juan Jesus; DOB 23 Feb 1961; POB Pamplona, Navarra Province, Spain; D.N.I. 15.841.101 (Spain); Member ETA (individual) [SDGT]

NARVAEZ PUENTES, James Orlando, Calle 1 No. 56–109, Casa 33 Seminar, Cali, Colombia; c/o CONSTRUCTORA LOMA LINDA S.A., Cali, Colombia; c/o CONSTRUCCIONES LA RESERVA S.A., Cali, Colombia; c/o CONSTRUCTORA UMBRIA S.A., Cali, Colombia; c/o VENECIA INMOBILIARIA QUILICHAO S.A. & CIA S.C.A., Cali, Colombia; c/o CONSTRUCTORA JUANAMBU S.A., Cali, Colombia; c/o CENTRO COMERCIAL GUSS S.A., Cali, Colombia; c/o AGROGANADERA LA ISABELA S.A., Cali, Colombia; Carrera 121 No. 13–76, Casa 7, Cali, Colombia; Carrera 66 No. 10–36, Cali, Colombia; DOB 29 Nov 1959; citizen Colombia; nationality Colombia; Cedula No. 16634261 (Colombia); Passport AF366653 (Colombia); alt. Passport AK279300 (Colombia) (individual) [SDNT]

NASR AL DIN, Ghazi (a.k.a. NASR AL-DIN, Hajj Ghazi 'Atif; a.k.a. NASR EL DIN GHASSAN, Ghassan; a.k.a. NASRALDINE, Ghazi 'Atef; a.k.a. NASSER AL-DIN, Ghazil; a.k.a. NASSER EL-DIN, Gazi; a.k.a. NASSERDDINE, Ghassan Attef Salame; a.k.a. NASSERDDINE, Ghazi; a.k.a. NASSERDINE GHASAN, Atef Salameh; a.k.a. NASSEREDDINE, Ghazi; a.k.a. NASSEREDDINE, Haj Ghazzi; a.k.a. NASSEREDINE, Haj Ghazi; a.k.a. NASSERIDINE, Gazi); DOB 13 Dec 1962; POB Lebanon (individual) [SDGT]

NASRALLAH, Hasan; DOB 31 Aug 1960; alt. DOB 31 Aug 1958; alt. DOB 31 Aug 1955; alt. DOB 31 Aug 1953; POB Al Basuriyah, Lebanon; Passport 042833 (Lebanon); Secretary General of HIZBALLAH (individual) [SDT]

NASSER ARANA, Carlos Alberto, c/o INVERSIONES NAMOS Y CIA. LTDA., Barranquilla, Colombia; c/o SURAMERICANA DE HOTELES LTDA., Barranquilla, Colombia; c/o PROMOTORA HOTEL BARRANQUILLA LTDA., Barranquilla, Colombia; c/o EDIFICACIONES DEL CARIBE LTDA., Barranquilla, Colombia; c/o GRAN COMPANIA DE HOTELES LTDA., Barranquilla, Colombia; c/o INVERSIONES PRADO TRADE CENTER LTDA., Barranquilla, Colombia; c/o

INMOBILIARIA DEL CARIBE LTDA., Barranquilla, Colombia; c/o HOTELES E INMUEBLES DE COLOMBIA LTDA., Barranquilla, Colombia; c/o INMOBILIARIA HOTELERA DEL CARIBE LTDA., Barranquilla, Colombia; c/o PROMOCIONES Y CONSTRUCCIONES DEL CARIBE LTDA., Y CIA. S.C.A., Barranquilla, Colombia; c/o DESARROLLOS URBANOS ''DESARROLLAR'' LTDA., Barranquilla, Colombia; c/o K. P. TO JEANS WEAR S. DE H., Barranquilla, Colombia; Calle 74 No. 53–30, Barranquilla, Colombia; c/o NEGOCIOS Y PROPIEDADES DEL CARIBE LTDA., Barranquilla, Colombia; c/o INVERSIONES HOTELERAS DEL LITORAL LTDA., Barranquilla, Colombia; c/o AGRICOLA SONGO LTDA., Barranquilla, Colombia; c/o PROMOCIONES Y CONSTRUCCIONES DEL CARIBE LTDA., Barranquilla, Colombia; DOB 21 Nov 1964; Cedula No. 8745045 (Colombia); Passport PE008808 (Colombia); alt. Passport T707770 (Colombia) (individual) [SDNT]

NASSER ARANA, Claudia Patricia (a.k.a. NASSER DE HASBUN, Claudia Patricia; a.k.a. NASSER DE HAZBUN, Claudia Patricia), c/o PROMOCIONES Y CONSTRUCCIONES DEL CARIBE LTDA., Barranquilla, Colombia; c/o CAMPO VERDE LTDA., Barranquilla, Colombia; Calle 74 No. 53–30, Barranquilla, Colombia; c/o PROMOCIONES Y CONSTRUCCIONES DEL CARIBE LTDA., Y CIA. S.C.A., Barranquilla, Colombia; c/o NEGOCIOS Y PROPIEDADES DEL CARIBE LTDA., Barranquilla, Colombia; c/o INVERSIONES PRADO TRADE CENTER LTDA., Barranquilla, Colombia; c/o INMOBILIARIA DEL CARIBE LTDA., Barranquilla, Colombia; c/o INMOBILIARIA HOTELERA DEL CARIBE LTDA., Barranquilla, Colombia; c/o GRAN COMPANIA DE HOTELES LTDA., Barranquilla, Colombia; Carrera 54 No. 75–97 piso 2, Barranquilla, Colombia; c/o HOTELES E INMUEBLES DE COLOMBIA LTDA., Barranquilla, Colombia; c/o DESARROLLOS URBANOS ''DESARROLLAR'' LTDA., Barranquilla, Colombia; c/o VILLA DE ARTE S. DE H., Barranquilla, Colombia; c/o EDIFICACIONES DEL CARIBE LTDA., Barranquilla, Colombia; Carrera 54 No. 74–79, Barranquilla, Colombia; c/o AGRICOLA SONGO LTDA., Barranquilla, Colombia; c/o SURAMERICANA DE HOTELES LTDA., Barranquilla, Colombia; c/o PROMOTORA HOTEL BARRANQUILLA LTDA., Barranquilla, Colombia; c/o INVERSIONES HOTELERAS DEL LITORAL LTDA., Barranquilla, Colombia; DOB 23 Jan 1966; alt. DOB 23 Jan 1963; Cedula No. 32665137 (Colombia); Passport AC751227 (Colombia) (individual) [SDNT]

NASSER ARANA, Jorge, c/o NEGOCIOS Y PROPIEDADES DEL CARIBE LTDA., Barranquilla, Colombia; c/o INVERSIONES HOTELERAS DEL LITORAL LTDA., Barranquilla, Colombia; c/o AGRICOLA SONGO LTDA., Barranquilla, Colombia; Calle 74 No. 53–30, Barranquilla, Colombia; c/o SURAMERICANA DE HOTELES LTDA., Barranquilla, Colombia; c/o INVERSIONES PRADO TRADE CENTER LTDA., Barranquilla, Colombia; c/o PROMOCIONES Y CONSTRUCCIONES DEL CARIBE LTDA., Barranquilla, Colombia; c/o PROMOTORA HOTEL BARRANQUILLA LTDA., Barranquilla, Colombia; c/o PROMOCIONES Y CONSTRUCCIONES DEL CARIBE LTDA., Y CIA. S.C.A., Barranquilla, Colombia; c/o HOTELES E INMUEBLES DE COLOMBIA LTDA., Barranquilla, Colombia; c/o VESTIMENTA J Y J S. de H., Barranquilla, Colombia; c/o HAPPY DAYS S. de H., Barranquilla, Colombia; c/o INMOBILIARIA HOTELERA DEL CARIBE LTDA., Barranquilla, Colombia; c/o EDIFICACIONES DEL CARIBE LTDA., Barranquilla, Colombia; c/o INMOBILIARIA DEL CARIBE LTDA., Barranquilla, Colombia; c/o GRAN COMPANIA DE HOTELES LTDA., Barranquilla, Colombia; c/o DESARROLLOS URBANOS ''DESARROLLAR'' LTDA., Barranquilla, Colombia; DOB 6 Nov 1966; Cedula No. 72139939 (Colombia); Passport T705915 (Colombia); alt. Passport AC143719 (Colombia) (individual) [SDNT]

NASSER DAVID, Julio Cesar (a.k.a. PEREZ PENA, Jaime), c/o DESARROLLOS URBANOS ''DESARROLLAR'' LTDA., Barranquilla, Colombia; c/o PROMOTORA HOTEL BARRANQUILLA LTDA., Barranquilla, Colombia; c/o INVERSIONES PRADO TRADE CENTER LTDA., Barranquilla, Colombia; c/o INMOBILIARIA HOTELERA DEL CARIBE LTDA., Barranquilla, Colombia; c/o INMOBILIARIA DEL CARIBE LTDA., Barranquilla, Colombia; Carrera 38B No. 76–40, Barranquilla, Colombia; c/o PROMOCIONES Y CONSTRUCCIONES DEL CARIBE LTDA., Barranquilla, Colombia; c/o HOTELES E INMUEBLES DE COLOMBIA LTDA., Barranquilla, Colombia; c/o EDIFICACIONES DEL CARIBE LTDA., Barranquilla, Colombia; c/o SURAMERICANA DE HOTELES LTDA., Barranquilla, Colombia; c/o AGRICOLA SONGO LTDA., Barranquilla, Colombia; c/o INVERSIONES HOTELERAS DEL LITORAL LTDA., Barranquilla, Colombia; c/o PROMOCIONES Y CONSTRUCCIONES DEL CARIBE LTDA., Y CIA. S.C.A., Barranquilla, Colombia; Calle 74 No. 53–30, Barranquilla, Colombia; c/o NEGOCIOS Y PROPIEDADES DEL CARIBE LTDA., Barranquilla, Colombia; c/o GRAN COMPANIA DE HOTELES LTDA., Barranquilla, Colombia; DOB 1 Nov 1940; alt. DOB 1 Oct 1940; Cedula No. 3710619 (Colombia); Passport H130865 (Colombia) (individual) [SDNT]

NASUF, Tahir (a.k.a. NASOOF, Tahar; a.k.a. NASUF, Taher; a.k.a. NASUF, Tahir Mustafa; a.k.a. ''ABU RIDA''; a.k.a. ''ABU SALIMA EL LIBI''; a.k.a. ''AL-QA'QA''), Manchester, United Kingdom; DOB 4 Nov 1961; alt. DOB 11 Apr 1961; POB Tripoli, Libya (individual) [SDGT]

NATIONAL CIGARETTES CO. LTD., P.O. Box 2083, Khartoum, Sudan; and all other branches in Sudan [SUDAN]

NATIONAL COMMITTEE FOR THE LIBERATION AND PROTECTION OF ALBANIAN LANDS (a.k.a. KKCMTSH) [BALKANS]

NATIONAL COTTON AND TRADE COMPANY, P.O. Box 1552, Khartoum, Sudan [SUDAN]

NATIONAL COUNCIL OF RESISTANCE (NCR) (a.k.a. MEK; a.k.a. MKO; a.k.a. MUJAHEDIN-E KHALQ; a.k.a. MUJAHEDIN-E KHALQ ORGANIZATION; a.k.a. MUSLIM IRANIAN STUDENT'S SOCIETY; a.k.a. NATIONAL COUNCIL OF RESISTANCE; a.k.a. NLA; a.k.a. ORGANIZATION OF THE PEOPLE'S HOLY WARRIORS OF IRAN; a.k.a. PEOPLE'S MUJAHEDIN ORGANIZATION OF IRAN; a.k.a. PMOI; a.k.a. SAZEMAN-E MUJAHEDIN-E KHALQ-E IRAN; a.k.a. THE NATIONAL LIBERATION ARMY OF IRAN); including its U.S. representative offices and all other offices worldwide [FTO] [SDGT]

NATIONAL ELECTRICITY CORPORATION, P.O. Box 1380, Khartoum, Sudan [SUDAN]

NATIONAL EXPORT-IMPORT BANK (N.K.A. BANK OF KHARTOUM GROUP), Sudanese Kuwait Commercial Centre, Nile Street, P.O. Box 2732, Khartoum, Sudan [SUDAN]

NATIONAL LIBERATION ARMY (a.k.a. NLA; a.k.a. UCK) [BALKANS]

NATIONAL LIBERATION ARMY (a.k.a. EJERCITO DE LIBERACION NACIONAL; a.k.a. ELN) [FTO] [SDGT]

NATIONAL MOVEMENT FOR THE LIBERATION OF KOSOVO (a.k.a. LKCK) [BALKANS]

NATIONAL REINSURANCE COMPANY (SUDAN) LIMITED, P.O. Box 443, Khartoum, Sudan [SUDAN]

NATIONAL STANDARDS AND CALIBRATION LABORATORY (a.k.a. NATIONAL CALIBRATION CENTRE; a.k.a. NSCL), P.O. Box 4470, Damascus, Syria [NPWMD]

NAUMAU, Uladzimir Uladzimiravich (a.k.a. NAUMOV, Vladimir Vladimirovich); DOB 1956; Minister of the Interior; Position also referred to as Minister of Internal Affairs (individual) [BELARUS]

NAVARRO HERNANDEZ, Yanet, c/o COPSERVIR LTDA., Bogota, Colombia; c/o CAJA SOLIDARIA, Bogota, Colombia; c/o LITOPHARMA, Barranquilla, Colombia; Cedula No. 32728558 (Colombia) (individual) [SDNT]

NAVARRO MARTINEZ, Samuel, Frankfurt, Germany (individual) [CUBA]

NAVARRO REYES, Fernando, c/o DROGAS LA REBAJA BARRANQUILLA S.A., Barranquilla, Colombia; c/o DROGAS LA REBAJA PRINCIPAL S.A., Bogota, Colombia; c/o DEPOSITO POPULAR DE DROGAS S.A., Cali, Colombia; c/o DROGAS LA REBAJA NEIVA S.A., Neiva, Colombia; c/o DROGAS LA REBAJA PEREIRA S.A., Pereira, Colombia; c/o SERVICIOS FARMACEUTICOS SERVIFAR S.A., Cali, Colombia; c/o DISTRIBUIDORA DEL VALLE E.U., Cali, Colombia; c/o DROGAS LA REBAJA CALI S.A., Cali, Colombia; c/o DROGAS LA REBAJA BOGOTA S.A., Bogota, Colombia; Cedula No. 16616177 (Colombia); Passport 16616177 (Colombia) (individual) [SDNT]

NAVIA DIAZ, Ricardo Alberto, c/o INTERNACIONAL DE DIVISAS S.A., Cali, Colombia; c/o OBURSATILES S.A., Cali, Colombia; c/o INTERNACIONAL DE

DIVISAS S.A., LLC, Miami, FL; DOB 11 Nov 1961; Cedula No. 16662355 (Colombia); Passport 16662355 (Colombia) (individual) [SDNT]

NAVIERA MARITIMA DE AROSA, S.A., Paseo de Pereda 36, Apartado 141, 39004 Santander, Spain [CUBA]

NAVIGABLE WATER CORPORATION, c/o EMPRESA DE NAVEGACION CARIBE, Edificio Lonja del Comercio, Lamparilla 2, Caja Postal 1784, Havana 1, Cuba [CUBA]

NAWAY, Haji Ali (a.k.a. NAVAI, Ali; a.k.a. NAWAE, Ali; a.k.a. NAWA'EE, Ali; a.k.a. NAWAI, Ali; a.k.a. NAWA'I, Ali), Iran; Karachi, Pakistan; United Arab Emirates; DOB circa 1945; alt. DOB circa 1950; POB Sistan Va Baluchistan, Iran; nationality Iran (individual) [SDNTK]

NAYDO, Valeriy (a.k.a. NAIDO, Valerii), c/o CET AVIATION, P.O. Box 932—20C, Ajman, United Arab Emirates; Equatorial Guinea; DOB 10 Aug 1957; citizen Ukraine; Passport KC024178 (Ukraine); alt. Passport AC251295 (Ukraine) (individual) [LIBERIA]

NCUBE, Abedinico; DOB 13 Mar 1954; Deputy Minister of Public Service, Labor and Social Welfare (individual) [ZIMBABWE]

NDLOVU MOTORWAYS, c/o Sam Nujoma Street/Livingston Avenue, Harare, Zimbabwe [ZIMBABWE]

NDLOVU, Naison K.; DOB 22 Oct 1930; Politburo Secretary for Production and Labor (individual) [ZIMBABWE]

NDLOVU, Richard; DOB 26 Jun 1942; Politburo Deputy Commissariat (individual) [ZIMBABWE]

NDLOVU, Rose Jaele; DOB 27 Sep 1939; Passport AD000813 (Zimbabwe); Spouse of Sikhanyiso Ndlovu (individual) [ZIMBABWE]

NDLOVU, Sikhanyiso Duke; DOB 4 May 1937; Passport ZD001355 (Zimbabwe); Deputy Minister of Higher and Tertiary Education (individual) [ZIMBABWE]

'NDRANGHETA ORGANIZATION, Italy [SDNTK]

NDRECAJ, Maliq; DOB 22 Apr 1969; POB Maciteve, Serbia and Montenegro (individual) [BALKANS]

NEAL, Juanita; DOB 09 MAY 1947; Former Deputy Minister of Finance of Liberia (individual) [LIBERIA]

NEGEEN; Vessel Registration Identification IMO 9071519 (vessel) [NPWMD]

NEGOCIOS LOS SAUCES LTDA., Carrera 4 No. 4–21 of. 1501, Edificio Seguros Bolivar, Cali, Colombia; Apartado Aereo 10077, Cali, Colombia; NIT # 890328835–1 (Colombia) [SDNT]

NEGOCIOS LOS SAUCES LTDA. Y CIA. S.C.S. (f.k.a. INMOBILIARIA SAMARIA LTDA.), Calle 18, No. 106–96 of. 201/202, Cali, Colombia; Calle 13A 64–50 F102, Cali, Colombia; Calle 13 3–32 piso 13, Cali, Colombia; Carrera 4 12–41 of. 1501, Edificio Seguros Bolivar, Cali, Colombia; NIT # 890937859–0 (Colombia) [SDNT]

NEGOCIOS Y CAPITALES S.A., Avenida 30 de Agosto No. 34–51, Pereira, Colombia; NIT # 800101701–0 (Colombia) [SDNT]

NEGOCIOS Y PROPIEDADES DEL CARIBE LTDA. (f.k.a. NEGOCIAR LTDA.), Calle 74 No. 53–30, Barranquilla, Colombia; NIT # 890108102–8 (Colombia) [SDNT]

NEMBHARD, Norris (a.k.a. NEMHARD, Norris; a.k.a. ''DEDO''; a.k.a. ''DIDO''); DOB 5 Jan 1952; alt. DOB 12 May 1954; alt. DOB 5 Jan 1951; POB Jamaica (individual) [SDNTK]

NETHERLANDS CARIBBEAN BANK N.V., 5ta. Ave. No. 6407 esq. a 66, Miramar, Municipio Playa, La Habana, Cuba; Kaya WFG (Jombi) Mensing 14, P.O. Box 3895, Willemstad, Curacao, Netherlands Antilles [CUBA]

NEW GROVE (f.k.a. KASPAR) (vessel) [CUBA]

NEW HAIFA SUGAR FACTORY, Kashm el Girba, Sudan [SUDAN]

NEW HALFA SUGAR FACTORY COMPANY LIMITED (a.k.a. NEW HALFA SUGAR COMPANY), El Gamaa Street (Aljama Street), New Halfa, P.O. Box 511/3047, Khartoum, Sudan; E-mail Address sukar@sudanmail.net (Sudan) [SUDAN]

NEW KHARTOUM TANNERY, P.O. Box 17, Khartoum, Sudan [SUDAN]

NEW PEOPLE'S ARMY/COMMUNIST PARTY OF THE PHILIPPINES (a.k.a. COMMUNIST PARTY OF THE PHILIPPINES; a.k.a. CPP; a.k.a. NEW PEOPLE'S ARMY; a.k.a. NPA; a.k.a. NPP/CPP) [FTO] [SDGT]

NEW STATE (a.k.a. IRAN NEW STATE); Vessel Registration Identification IMO 9209336 (vessel) [NPWMD]

NG, Sor Hong (a.k.a. LAW, Cecilia; a.k.a. LO, Cecilia; a.k.a. NG, Cecilia), 3 Shenton Way, #10–01 Shenton House, Singapore 068805, Singapore; 150 Prince Charles Crescent, #18–03, Singapore 159012, Singapore; DOB 1958; citizen Singapore; Identification Number S1481823E (Singapore); Chief Executive, Managing Director, and Owner, Golden Aaron Pte. Ltd., Singapore; Director and Owner, G A Ardmore Pte. Ltd., Singapore; Chief Executive, Director and Owner, G A Capital Pte. Ltd., Singapore; Director and Owner, G A Foodstuffs Pte. Ltd., Singapore; Chief Executive, Director and Owner, G A Land Pte. Ltd., Singapore; Director and Owner, G A Resort Pte. Ltd., Singapore; Chief Executive, Director and Owner, G A Sentosa Pte. Ltd., Singapore; Chief Executive, Director and Owner, G A Treasure Pte. Ltd., Singapore; Director and Owner, G A Whitehouse Pte. Ltd., Singapore; Chief Executive, Manager, and Owner, S H Ng Trading Pte. Ltd., Singapore (individual) [BURMA]

NGUNI, Sylvester Robert; DOB 4 May 1955; Passport ZE215371 (Zimbabwe); Deputy Minister of Agriculture (individual) [ZIMBABWE]

NHEMA, Chenayaimoyo Dunstan Francis, 3 Farthinghill Road, Borrowdale, Harare, Zimbabwe; DOB 17 Apr 1959; Passport AD000966 (Zimbabwe); Minister of Environment and Tourism (individual) [ZIMBABWE]

NICE FANTASY GARMENT COMPANY LTD., 391/6—391/9 Soi Santi Thetsaban, Ratchada Phisek Road, Lat Yao precinct, Chatuchak district, Bangkok, Thailand [SDNTK]

NIDAL, Abu (a.k.a. AL BANNA, Sabri Khalil Abd Al Qadir); DOB May 1937; alt. DOB May 1940; POB Jaffa, Israel; Founder and Secretary General of ABU NIDAL ORGANIZATION (individual) [SDT]

NIEBLA CORDOZA, Rosario (a.k.a. NIEBLA CORDOSA, Rosario), La Calle Jesus Clark Flores # 48, Octava Seccion, Fraccionamiento Chapultepec, Tijuana, Baja California, Mexico; Avenida Paseo Lomas De Mazatlan 6, Lomas De Mazatlan, Mazatlan, Sinaloa 82110, Mexico; c/o ROSARIO NIEBLA CARDOZA A. EN P., Culiacan, Sinaloa, Mexico; S Madre Occidental 1323, Culiacan, Sinaloa 80178, Mexico; Calle Ciudades de Hermanas # 277, Colonia Guadalupe, Culiacan, Sinaloa, Mexico; Calle Ciudad Victoria 1168, Las Quintas, Culiacan, Sinaloa 80060, Mexico; c/o NUEVA INDUSTRIA DE GANADEROS DE CULIACAN S.A. DE C.V., Culiacan, Sinaloa, Mexico; c/o ESTABLO PUERTO RICO S.A. DE C.V., Culiacan, Sinaloa, Mexico; Avenida Manuel Vallarta 2141, Colonia Centro, Culiacan, Sinaloa 80129, Mexico; Calle Ciudad de Hermosillo # 1168, Fraccionamiento Las Quintas, Culiacan, Sinaloa 80060, Mexico; c/o JAMARO CONSTRUCTORES S.A. DE C.V., Culiacan, Sinaloa, Mexico; DOB 06 Oct 1946; POB Culiacan, Sinaloa, Mexico; citizen Mexico; nationality Mexico; C.U.R.P. NICR461006MSLBRS09 (Mexico); R.F.C. NICR–461006-T36 (Mexico) (individual) [SDNTK]

NIKOLIC, Dragan; DOB 26 Apr 1957; POB Vlasenica, Bosnia-Herzegovina; ICTY indictee (individual) [BALKANS]

NIKOLIC, Drago; DOB 9 Nov 1957; POB Vlasenica, Bosnia-Herzegovina; ICTY indictee (individual) [BALKANS]

NIKOLIC, Momir; DOB 20 Feb 1955; POB Bratunac, Bosnia-Herzegovina; ICTY indictee (individual) [BALKANS]

NIKOLIC, Zarko; DOB 7 May 1938; POB Sovljak, Serbia and Montenegro (individual) [BALKANS]

NILE CEMENT COMPANY LIMITED, P.O. Box 1502, Khartoum, Sudan; Factories at Rabak, St. 45–47, Khartoum Extension, Sudan [SUDAN]

NILE CEMENT FACTORY, P.O. Box 1502, Khartoum, Sudan; Rabak, Sudan [SUDAN]

NINO VALBUENA, Luis German, c/o COLPHAR S.A., Bogota, Colombia; Cedula No. 19423011 (Colombia); Passport 19423011 (Colombia) (individual) [SDNT]

NINTH OCEAN; Vessel Registration Identification IMO 9165798 (vessel) [NPWMD]

NIPPON-CARIBBEAN CO., LTD., Chuo-Ku, Akasaki-Chuo 1–1 Akasaki Bldg., Tokyo, Japan [CUBA]

NIREF, Boezembolcht 23, Rotterdam, Netherlands [CUBA]

NIRU BATTERY MANUFACTURING COMPANY (a.k.a. NIROU BATTERY MANUFACTURING SABA BATTERY COMPANY; a.k.a. NIRU CO. LTD.; a.k.a. SHERKAT BATTERY SAZI NIRU SAHAMI KHASS; a.k.a. THE NIRU BATTERY COMPANY), End of Pasdaran Avenue, Nobonyad Square, P.O. Box 19575–361, Tehran 16489, Iran; Next to Babee Exp. Way, Nobonyad Sq., P.O. Box 19575–361, Tehran, Iran [NPWMD]

NKOMO, Georgina Ngwenya, 59 Muchbimding Road, Worringham, Bulawayo, Zimbabwe; DOB 4 Aug 1966; Spouse of John Nkomo (individual) [ZIMBABWE]

NKOMO, John Landa, 59 Muchbimding Road, Worringham, Bulawayo, Zimbabwe; DOB 22 Aug 1934; Passport AD000477 (Zimbabwe); Speaker of Parliament & ZANU-PF National Chairman (individual) [ZIMBABWE]

NKOMO, Louise S. (a.k.a. NHEMA, Louise Sehulle), 3 Farthinghill Road, Borrowdale, Harare, Zimbabwe; DOB 25 Aug 1964; Passport ZE151361 (Zimbabwe); Spouse of Francis Nhema (individual) [ZIMBABWE]

NKOMO, Stephen; DOB 3 Oct 1926; Former Politburo Senior Committee Member; Deceased (individual) [ZIMBABWE]

NKUNDA, Laurent (a.k.a. NKUNDA BATWARE, Laurent; a.k.a. NKUNDA MAHORO BATWARE, Laurent; a.k.a. NKUNDA, General; a.k.a. NKUNDABATWARE, Laurent); DOB 6 Feb 1967; alt. DOB 2 Feb 1967; POB Rutshuru, North Kivu, Democratic Republic of the Congo; Founder, National Congress for the People's Defense; Senior Officer, Rally for Congolese Democracy-Goma (RCD-G), 1998–2006; Officer, Rwandan Patriotic Front (RPF), 1992–1998 (individual) [DRCONGO]

NO. 1 MINING ENTERPRISE, 90 Kanbe Road, Yankin, Rangoon, Burma [BURMA]

NO. 2 MINING ENTERPRISE, 90 Kanbe Road, Yankin, Rangoon, Burma [BURMA]

NO. 3 MINING ENTERPRISE, 90 Kanbe Road, Yankin, Rangoon, Burma [BURMA]

NOOR MUHAMMAD, Abdul Majeed (a.k.a. NOOR MOHAMMAD, Abdul Majid; a.k.a. NOOR MUHAMMED, Abdul Majid), c/o FMF GENERAL TRADING LLC, Dubai, United Arab Emirates; DOB 1957; POB Chagai, Pakistan; citizen Pakistan; Passport LA097936 (Pakistan) (individual) [SDNTK]

NOORZAI, Haji Bashir (a.k.a. BISHR, Haji); DOB 1961; POB Afghanistan (individual) [SDNTK]

NORDIC LTD. (a.k.a. NORDIK LIMITED EOOD), 9 Frederick J. Curie Street, Sofia 1113, Bulgaria [LIBERIA]

NORDSTRAND LTD., Liechtenstein [CUBA]

NORDSTRAND MARITIME AND TRADING COMPANY, 33 Akti Maouli, 185–35 Pireas (Piraeus), Greece [CUBA]

NORIEGA, Manuel Antonio, Panama (individual) [CUBA]

NORTH ISLAND SHIPPING CO. LTD., c/o UNION MARITIMA PORTUARIA, 9-Piso, Apartado B, Esquina Cuarteles y Pena Pobre 60, Havana Vieje, Havana, Cuba [CUBA]

NORTH ISLANDS (vessel) [CUBA]

NORTHWEST SENNAR SUGAR FACTORY, Northwest Sennar, Sudan [SUDAN]

NOVA CARVAJAL, Mary Luz, c/o ABS HEALTH CLUB SA, Bogota, Colombia; c/o SOCIEDAD SUPERDEPORTES LTDA., Bogota, Colombia; DOB 19 Dec 1974; citizen Colombia; nationality Colombia; Cedula No. 52253223 (Colombia) (individual) [SDNT]

NOVAPINSKI LTDA., Avenida 3 No. 21–50, Cali, Colombia; NIT # 800246936–7 (Colombia) [SDNT]

NOVIN ENERGY COMPANY (a.k.a. ENERGY NOVIN; a.k.a. NOVEEN ENERGY COMPANY), End of North Karegar Avenue, Tehran, Iran [NPWMD]

NTAWUNGUKA, Pacifique (a.k.a. COLONEL OMEGA; a.k.a. NTAWUNGULA, Pacifique; a.k.a. NZERI), Peti, Walikale, Masisi Border, Congo, Democratic Republic of the; DOB 1 Jan 1964; alt. DOB 1964; POB Gaseke, Gisenyi Province, Rwanda; Colonel; Commander of FDLR 1st Division (individual) [DRCONGO]

NUCLEAR RESEARCH CENTER FOR AGRICULTURE AND MEDICINE (a.k.a. CENTER FOR AGRICULTURAL RESEARCH AND NUCLEAR MEDICINE; a.k.a. KARAJ NUCLEAR RESEARCH CENTER; a.k.a. NRCAM; a.k.a. ''KARAJI AGRICULTURAL AND MEDICAL RESEARCH CENTER''), P.O. Box 31585–4395, Karaj, Iran [NPWMD]

NUEVA INDUSTRIA DE GANADEROS DE CULIACAN S.A. DE C.V. (a.k.a. DORA PASTEURIZA DE LECHE SANTA MONICA; f.k.a. INDUSTRIAS DE GANADEROS S.A. DE C.V.; a.k.a. LECHERIA SANTA MONICA; a.k.a. SANTA MONICA DAIRY), Avenida Vallarta 2141, Colonia Centro, Culiacan, Sinaloa 80060, Mexico; Carretera A Navolato, Colonia Bachigualato, Culiacan, Sinaloa 80060, Mexico; Calle Tomate 10 Bodega 34Y5, Colonia Mercado Abastos, Culiacan, Sinaloa 83170, Mexico; Matamoros 5, Escuinapa, Sinaloa 82478, Mexico; Carretera Los Mochis Topolobampo, KM. 5.2, Los Mochis, Sinaloa, Mexico; Calle Federalismo 2000, Colonia Recursos Hidraulicos, Culiacan, Sinaloa 80060, Mexico; Avenida Xicotencalth # 1795, Colonia Las Quintas, Culiacan, Sinaloa 80060, Mexico; Chamizal S/N, La Cruz, Sinaloa 82700, Mexico; Carretera Internacional 1845, Bodega 8 y 10, Colonia Zona Industrial 2, Ciudad Obregon, Sonora 85065, Mexico; Carretera A Topolobampo 5, Colonia Ninos Heroes, Ahome, Sinaloa 81290, Mexico; Avenida Francisco Villa Norte 135, Colonia Ninos Heroes, Salvador Alvarado, Sinaloa 81400, Mexico; Carretera La Cruz KM 15 S/N, Colonia Arroyitos, La Cruz, Sinaloa 82700, Mexico; Plaza Azul S/N, Colonia Las Brisas, Tecuala, Nayarit, Mexico; Calle Sauces 384, Colonia Del Bosque, Guasave, Sinaloa 81020, Mexico; Calle Central Local A10, Colonia Mercado Abastos, Cajeme, Sonora 85000, Mexico; Calle Jose Diego Abad 2923, Colonia Bachigualato, Culiacan, Sinaloa 80140, Mexico; Calle/Boulevard Doctor Mora 1230, Colonia Las Quintas, Culiacan, Sinaloa 80060, Mexico; Carretera Internacional al Norte KM 1.5, 1207, Colonia Ejido Venadillo, Mazatlan, Sinaloa 82129, Mexico; Carretera Augstin Olachea Local 30, Colonia Pericues, La Paz, Baja California Sur 23090, Mexico; Calle Prolongacion Morelos y Matamoros S/N, Colonia Benito Juarez, Escuinapa, Sinaloa 82400, Mexico; R.F.C. NIG–8802029-Y7 (Mexico) [SDNTK]

NUMA SANJUAN, Antonieta, c/o INTERCONTINENTAL DE AVIACION S.A., Bogota, Colombia; c/o ACCIRENT S.A., Bogota, Colombia; Avenida 0 No. 10–38, Cucuta, Norte de Santander, Colombia; DOB 20 Oct 1962; POB Ocana, Norte de Santander, Colombia; Cedula No. 60291819 (Colombia); Passport AC227693 (Colombia); alt. Passport AE227693 (Colombia) (individual) [SDNT]

NUNEZ TOLBANOS, Vicente Antonio, c/o COLIMEX LTDA., Cali, Colombia; c/o CPV SISTEMAS GRAFICOS S.L., Madrid, Spain; c/o JAROMO INVERSIONES S.L., Madrid, Spain; c/o RODRIGUEZ Y TOLBANOS S.A., Alcala de Henares, Madrid, Spain; N.I.E. 8966981-V (Spain) (individual) [SDNT]

NYAMBUYA, Michael Rueben; DOB 23 Jul 1955; Passport AN045019 (Zimbabwe); Minister of Energy and Power Development (individual) [ZIMBABWE]

NYEIN, Chan (a.k.a. NYEIN, Chan, Dr.; a.k.a. NYEIN, Chang, Dr.), Burma; DOB 1944; citizen Burma; nationality Burma; Minister of Education (individual) [BURMA]

NYONI, Peter Baka; DOB 10 Jan 1950; Passport ZD002188 (Zimbabwe); Spouse of Sithembiso Nyoni (individual) [ZIMBABWE]

NYONI, Sithembiso; DOB 20 Sept 1949; Passport AD000223 (Zimbabwe); Minister of Small and Medium Enterprises Development (individual) [ZIMBABWE]

NZEYIMANA, Stanislas (a.k.a. BIGARUKA; a.k.a. BIGARUKA IZABAYO, Deogratias; a.k.a. BIGARURA; a.k.a. IZABAYO DEO), Kalonge, Masisi, North Kivu, Congo, Democratic Republic of the; Kibua, Congo, Democratic Republic of the; DOB 1 Jan 1966; alt. DOB 28 Aug 1966; alt. DOB 1967; POB Mugusa (Butare), Rwanda; citizen Rwanda; Brig. General; Deputy Overall Commander FOCA (individual) [DRCONGO]

OASIS FREIGHT AGENCIES (a.k.a. OASIS FREIGHT AGENCY LLC), Kayed Ahli Building, Jamal Abdul Nasser Road (Parallel to Al Wahda St.), P.O. Box Box 4840, Sharjah, United Arab Emirates; Sharaf Building, No. 4, 2nd Floor, Al Meena Road, Opposite Customs, Dubai, United Arab Emirates; Sharaf Building, 1st Floor, Al Mankhool St., Bur Dubai, P.O. Box 5562, Dubai, United Arab Emirates [NPWMD]

OBRENOVIC, Dragan; DOB 12 Apr 1963; POB Matino Brdo, Bosnia-Herzegovina; ICTY indictee (individual) [BALKANS]

OBURSATILES S.A. (a.k.a. OPERACIONES BURSATILES S.A. COMISIONISTA DE BOLSA), Carrera 7 No. 74–56 of. 909, Bogota, Colombia; Carrera 15 No. 87–32, Bogota, Colombia; Carrera 22 No. 18–65 Local 28, Manizales, Colombia; Calle 10 No. 4–40 of. 312, Cali, Colombia; Carrera 28 No. 29–06 Local 104, Palmira, Colombia; Centro Comercial Cosmocentro Local 103, Cali, Colombia; Transversal 71D No. 26–94 Sur Local 3504, Bogota, Colombia; Avenida 4N No. 4N–30, Cali, Colombia; Avenida 68 No. 75A–50 Local 230, Bogota, Colombia; Calle 19 No. 5–48 Local 226, Pereira, Colombia; Carrera 49 No. 52–81 L–9923, Medellin, Colombia; Carrera 52 No. 72–65 Local 106, Barranquilla, Colombia; Carrera 66B No. 34A–76 Local 227, Medellin, Colombia; NIT # 800012425–0 (Colombia) [SDNT]

OCAMPO ROMAN, Carlos Jose, c/o CONSTRUCCIONES ASTRO S.A., Cali, Colombia; DOB 2 Feb 1959; Cedula No. 6401478 (Colombia) (individual) [SDNT]

OCCIDENTAL COMUNICACIONES LTDA., Calle 19N No. 2N–29 piso 10 Sur, Cali, Colombia; Calle 44N No. 2BN–10, Cali, Colombia; NIT # 800146996–1 (Colombia) [SDNT]

OCCIDENTAL DE PAPELES LTDA. (a.k.a. OCCIPAPEL LTDA.), Avenida 2D No. 24N–06, Cali, Colombia; NIT # 805017535–3 (Colombia) [SDNT]

OCEAN CANDLE (a.k.a. IRAN OCEAN CANDLE); Vessel Registration Identification IMO 9167253 (vessel) [NPWMD]

OCEJO MIRAMONTES, Alfredo Eugenio, c/o QUINTA REAL JARDIN SOCIAL Y DE EVENTOS, S.A. DE C.V., Tijuana, Baja California, Mexico; Via Rapida Oriente 10950, Altos Rio Tijuana, Tijuana, Baja California, Mexico; Sinaloa, Calle 112 Mexico, Tijuana, Baja California 22150, Mexico; DOB 26 May 1964; POB Baja California, Mexico; C.U.R.P. OEMA640526HBCCRL05 (Mexico); R.F.C. OEMA–640526-AJ3 (Mexico) (individual) [SDNTK]

OCHOA VASCO, Fabio Enrique (a.k.a. GONZALEZ ZAPATA, Antonio; a.k.a. MARTINEZ PEREZ, Juan Carlos; a.k.a. OCHOA VASCO, Carlos Mario; a.k.a. VEGA TOBON, Carlos Mario; a.k.a. ''CARLOS MARIO''; a.k.a. ''KIKO''; a.k.a. ''KIKO EL CHIQUITO''), Av Mexico 2867–17, Col Vallarta, Norte, Guadalajara, Jalisco 44690, Mexico; Medellin, Antioquia, Colombia; Av Miguel Angel 18, Real Vallarta, Zapopan, Jalisco 44020, Mexico; DOB 22 Nov 1960; alt. DOB 20 Nov 1963; POB Medellin, Colombia; Cedula No. 79281039 (Colombia); alt. Cedula No. 15508422 (Colombia); Passport AE063894 (Colombia) (individual) [SDNT]

OCTUBRE HOLDING SOCIETE ANONIME (a.k.a. OCTOBER HOLDING COMPANY), Vaduz, Liechtenstein [CUBA]

ODESSA AIR (f.k.a. OKAPI AIR), Entebbe, Uganda [LIBERIA]

OFFENBACH HAUSHALTWAREN B.V., Rietlanden 5—A, Beverwijk 1948, Netherlands; Rietlanden 5—7, Beverwijk 1948 NE, Netherlands; C.R. No. 28094396 (Netherlands) [SDNTK]

OGUNGBUYI, Abeni O. (a.k.a. BABESTAN, Abeni O.; a.k.a. SHOFESO, Olatutu Temitope); DOB 30 Jun 1952; POB Nigeria (individual) [SDNTK]

OGUNGBUYI, Oluwole A. (a.k.a. ADEMULERO, Babestan Oluwole; a.k.a. BABESTAN, Wole A.; a.k.a. OGUNGBUYI, Wally; a.k.a. OGUNGBUYI, Wole A.; a.k.a. SHOFESO, Olatude I.; a.k.a. SHOFESO, Olatunde Irewole); DOB 4 Mar 1953; POB Nigeria (individual) [SDNTK]

OIL CORPORATION, P.O. Box 64, Khartoum, Sudan [SUDAN]

OJDANIC, Dragoljub; DOB 1 Jun 1941; POB Ravni-Cajetina, Serbia and Montenegro; Ex-Fry Minister of Defense; ICTY indictee in custody (individual) [BALKANS]

OLARRA GURIDI, Juan Antonio; DOB 11 Sep 1967; POB San Sebastian, Guipuzcoa Province, Spain; D.N.I. 30.084.504 (Spain); Member ETA (individual) [SDGT]

OLARTE LOMBANA, Alonso (a.k.a. GUZMAN FLOREZ, Reinel; a.k.a. ''LUIS EDUARDO MARIN''; a.k.a. ''RAFAEL GUTIERREZ''); DOB 7 Nov 1960; alt. DOB 11 Apr 1957; POB Bogota, Colombia; alt. POB Natagaima, Tolima, Colombia; citizen Colombia; nationality Colombia; Cedula No. 18260876 (Colombia) (individual) [SDNTK]

OLAYA ROSCIASCO, Patricia Esperanza, c/o LABORATORIOS PROFARMA LTDA., Bogota, Colombia; DOB 30 Mar 1963; Cedula No. 51698439 (Colombia); Passport 51698439 (Colombia) (individual) [SDNT]

OLDHAM FARM, Chegutu, Zimbabwe [ZIMBABWE]

OLIVAS OJEDA, Jesus Joaquin, Av. Sexecnal No. 3043, Col. Republica Mexicana, Culiacan, Sinaloa, Mexico; c/o COMERCIALIZADORA TOQUIN, S.A. DE. C.V., Guadalajara, Jalisco, Mexico; DOB 25 Oct 1955; citizen Mexico; nationality Mexico; R.F.C. OIOJ551025S49 (Mexico) (individual) [SDNTK]

OLIVAS OJEDA, Juan Carlos, c/o COMERCIALIZADORA BRIMAR'S, S.A. DE. C.V., Culiacan, Sinaloa, Mexico; Calle Sierra Madre del Sur No. 1525–A, Infonavit Canadas, Culiacan, Sinaloa, Mexico; DOB 14 Mar 1965; POB Navolato, Sinaloa, Mexico; citizen Mexico; nationality Mexico (individual) [SDNTK]

OLIVAS OJEDA, Marco Antonio, Ave. Naciones Unidas No. 5677–4, Condominio Essex, Jard. de la Parque Regenci., Zapopan, Jalisco, Mexico; Calle Jesus Almada No. 214, Colonia Pueblo Nuevo 1, Navolato, Sinaloa, Mexico; c/o SIN-MEX IMPORTADORA, S.A. DE C.V., Guadalajara, Jalisco, Mexico; c/o COMERCIAL JOANA, S.A. DE C.V., Guadalajara, Jalisco, Mexico; c/o TOYS FACTORY, S.A. DE C.V., Tijuana, Baja California, Mexico; c/o COMERCIAL DOMELY, S.A. DE C.V., Toluca, Mexico, Mexico; c/o COMERCIALIZADORA BRIMAR'S, S.A. DE. C.V., Culiacan, Sinaloa, Mexico; DOB 14 Jun 1960; POB Navolato, Sinaloa, Mexico; citizen Mexico; nationality Mexico; C.U.R.P. OIOM600614HSLLJR08 (Mexico); Electoral Registry No. OIOJMR60061425H900 (Mexico); R.F.C. OIOM600614YA5 (Mexico) (individual) [SDNTK]

OLIVELLA CELEDON, Jaime Antonio, Carrera 5 No. 86–36 Apt. 402, Bogota, Colombia; c/o INTERCONTINENTAL DE AVIACION S.A., Bogota, Colombia; DOB 23 May 1944; POB Augustin Codazzi, Cesar, Colombia; Cedula No. 17100787 (Colombia); Passport AG619501 (Colombia); alt. Passport AE542565 (Colombia); alt. Passport AC557754 (Colombia) (individual) [SDNT]

OLIVEROS GUZMAN, Henry, c/o MAYOR COMERCIALIZADORA LTDA., Bogota, Colombia; c/o INVERSIONES MPS S.A., Bogota, Colombia; c/o HOTEL LA CASCADA S.A., Girardot, Colombia; c/o MOR ALFOMBRAS ALFOFIQUE S.A., Bogota, Colombia; c/o GERENCIA DE PROYECTOS Y SOLUCIONES LTDA., Bogota, Colombia; POB Colombia; Cedula No. 79484051 (Colombia) (individual) [SDNT]

OMAIRI, Farouk (a.k.a. AL-OMAIRI, Faruk; a.k.a. AL-UMAYRI, Faruz; a.k.a. OMAIRI, Farouk Abdul Haj; a.k.a. UMAIRI, Faruq), 605 Avenida Brasil, Apt No. 48, Foz do Iguacu, Brazil; DOB 6 Dec 1945; POB Hermel, Lebanon; citizen Brazil (individual) [SDGT]

OMAR, Mohammed, Afghanistan; DOB 1950; POB Hotak, Kandahar Province, Afghanistan; Commander of the Faithful (''Amir al-Munineen'') (individual) [SDGT]

OMDURMAN SHOE FACTORY, Omdurman, Sudan [SUDAN]

OMRAN SAHEL, Tehran, Iran [NPWMD]

OMRAN, Karim Dhaidas, Iraq (individual) [IRAQ2]

ONYX ISLANDS (vessel) [CUBA]

OO, Maung; DOB 1952; citizen Burma; nationality Burma; Major General; Minister of Home Affairs (individual) [BURMA]

OO, Tin Aung Myint (a.k.a. OO, Thiha Thura Tin Aung Myint); DOB 27 May 1950; citizen Burma; nationality Burma; Lieutenant-General; Quartermaster General; Minister of Military Affairs; Member, State Peace and Development Council (individual) [BURMA]

OPERADORA DE CAJA Y SERVICIOS, S.A. DE C.V., Diaz Ordaz Blvd., 9B del Prado, Tijuana, Baja California, Mexico; Blvd. Agua Caliente 9231, Cacho, Tijuana, Baja California, Mexico; R.F.C. OCS–920326–850 (Mexico) [SDNTK]

OPERADORA INTEGRAL DE COMERCIO, S.A. DE C.V., Blvd. Bellas Artes, No. 17686, No. Int. 5, Col. Garita de Otay, Tijuana, Baja California, Mexico; R.F.C. OIC040925SA9 (Mexico) [SDNTK]

OPERADORA VALPARK, S.A. DE C.V., Calle Netzahuacoyotl y Paseo Centenario, Tijuana, Baja California, Mexico; Avenida Cuauhtemoc 1711, Ofc. 305A, Zona Rio, Tijuana, Baja California, Mexico [SDNTK]

ORANGE VOLUNTEERS, United Kingdom [SDGT]

ORBE SEVILLANO, Zigor; DOB 22 Sep 1975; POB Basauri, Vizcaya Province, Spain; D.N.I. 45.622.851 (Spain); Member ETA (individual) [SDGT]

ORGANIZACION EMPRESARIAL A DE J HENAO M E HIJOS Y CIA. S.C.S., Carrera 4A No. 16–04 apt. 303, Cartago, Colombia; Km. 5 Via Aeropuerto, Hacienda Coque, Cartago, Colombia; NIT # 800157331–1 (Colombia) [SDNT]

ORGANIZACION LUIS HERNANDO GOMEZ BUSTAMANTE Y CIA S.C.S., Carrera 4 No. 12–20 of. 206, Cartago, Valle, Colombia; NIT # 800140477–1 (Colombia) [SDNT]

ORIC, Naser; DOB 3 Mar 1967; POB Potocari, Bosnia-Herzegovina; ICTY indictee in custody (individual) [BALKANS]

ORIENT SHIPPING LIMITED, Lot 18, Bay Street, Kingstowne, Saint Vincent and the Grenadines [IRAQ2]

ORIENT STAR CORPORATION (a.k.a. ORIENT STAR AVIATION), 811 S. Central Expwy., Ste 210, Richardson, TX 75080 [LIBERIA]

ORIENTAL OIL KISH, Second Floor, 96/98 East Atefi St., Africa Blvd., Tehran, Iran; Dubai, United Arab Emirates [NPWMD]

ORIENTE CONTRATISTAS GENERALES S.A., Jr. San Martin 707, Int. 201, Trujillo, Peru; RUC # 20167975616 (Peru) [SDNTK]

ORIENTE TOURS S.R.L., Jr. Soledad 113, Oficina 302, Lima, Peru; RUC # 20107539884 (Peru) [SDNTK]

ORIMAR LTDA., Carrera 19 No. 57–33, Bogota, Colombia; NIT # 801076804–7 (Colombia) [SDNT]

ORLANDO SABOGAL ZULUAGA E HIJOS & CIA S EN C, Hacienda Portugal, Ansermanuevo, Valle, Colombia; NIT # 800181393–7 (Colombia) [SDNT]

OROPEZA MEDRANO, Francisco Javier, c/o Farmacia Vida Suprema, S.A. DE C.V.,

Tijuana, Baja California, Mexico; Avenida Los Reyes 18108-D, Fraccionamiento Villa de Baja California 22684, Tijuana, Baja California, Mexico; DOB 23 Feb 1968; POB Coahuila, Mexico (individual) [SDNTK]

OROZCO CARDENAS, Adrian, c/o Farmacia Vida Suprema, S.A. DE C.V., Tijuana, Baja California, Mexico; c/o Distribuidora Imperial De Baja California, S.A. de C.V., Tijuana, Baja California, Mexico; c/o ADP, S.C., Tijuana, Baja California, Mexico; c/o Forpres, S.C., Tijuana, Baja California, Mexico; Privada Colonia del Valle 7001, Fraccionamiento Residencial Agua Caliente, Tijuana, Baja California, Mexico; c/o Administradora De Inmuebles Vida, S.A. de C.V., Tijuana, Baja California, Mexico; Calle Circunvalacion Sur 273–5, Colonia Las Fuentes 45070, Zapopan, Jalisco, Mexico; DOB 14 Sep 1953; POB Distrito Federal, Mexico (individual) [SDNTK]

OROZCO LOPEZ, Orlando, c/o ASESORIAS ECONOMICAS MUNOZ SANTACOLOMA E.U., Cali, Colombia; c/o CHAMARTIN S.A., Cali, Colombia; Cedula No. 16736406 (Colombia); Passport 16736406 (Colombia) (individual) [SDNT]

OROZCO NINO, Carlos Alberto, c/o RENTAR INMOBILIARIA S.A., Cali, Colombia; c/o PROSALUD S.A. Y BIENESTAR S.A., Cali, Colombia; c/o COMERCIALIZADORA INTERTEL S.A., Cali, Colombia; DOB 16 Oct 1967; Cedula No. 16745992 (Colombia); Passport 16745992 (Colombia) (individual) [SDNT]

ORS, Jose Antonio Rego, Tokyo, Japan (individual) [CUBA]

ORTEGA PINA, Dario, Edificio Saldivar, Panama City, Panama (individual) [CUBA]

ORTIZ CARDONA, Gloria, c/o MACROFARMA S.A., Pereira, Colombia; Cedula No. 34056678 (Colombia); Passport 34056678 (Colombia) (individual) [SDNT]

ORTIZ PALACIOS, Willington Alfonso (a.k.a. ORTIZ PALACIO, Willington Alfonso), Avenida 5AN No. 23D–68 piso 2 L–113, Cali, Colombia; Calle 5 No. 25–65, Cali, Colombia; Carrera 62 Bis No. 6A, Cali, Colombia; c/o CREACIONES DEPORTIVAS WILLINGTON LTDA., Cali, Colombia; Cedula No. 19159807 (Colombia); Passport AF582577 (Colombia) (individual) [SDNT]

ORTIZ, Guadalupe, Cubanatur, Baja California 255, Edificio B, Oficina 103, Condesa 06500, Mexico, D.F., Mexico (individual) [CUBA]

ORYX NATURAL RESOURCES (a.k.a. ORYX DIAMONDS; a.k.a. ORYX DIAMONDS (PTY) LTD; a.k.a. ORYX DIAMONDS LTD.; a.k.a. ORYX ZIMCON (PVT) LIMITED), S Drive, George Town, Grand Cayman, Cayman Islands; Bermuda; Parc Nicol Offices, Bldg. 6, 301, William Nicol Drive, Bryanston, Gauteng 2021, South Africa; Alexander Forbes Building, Windhoek, Namibia; 3, Victor Darcy Close, Borrowdale, Harare, Zimbabwe; Bank of Nova Scotia Bldg., Fourth Floor, George Town, Grand Cayman, Cayman Islands [ZIMBABWE]

OSLEG (a.k.a. OPERATION SOVEREIGN LEGITIMACY; a.k.a. OSLEG (PVT.) LTD.; a.k.a. OSLEG ENTERPRISES; a.k.a. OSLEG MINES; a.k.a. OSLEG MINING AND EXPLORATION; a.k.a. OSLEG VENTURES), Lonhoro House, Union Avenue, Harare, Zimbabwe [ZIMBABWE]

OSORIO AVILA, Orlando, c/o CASA GRAJALES S.A., La Union, Valle, Colombia; c/o INVERSIONES SANTA CECILIA S.C.S., La Union, Valle, Colombia; c/o EAGLE COMMUNICATION BROKERS INC., Panama City, Panama; Calle 14 No. 16–54, La Union, Valle, Colombia; c/o FREXCO S.A., La Union, Valle, Colombia; c/o TRANSPORTES DEL ESPIRITU SANTO S.A., La Union, Valle, Colombia; c/o FUNDACION CENTRO DE INVESTIGACION HORTIFRUTICOLA DE COLOMBIA, La Union, Valle, Colombia; c/o GRAJALES S.A., La Union, Valle, Colombia; c/o INDUSTRIAS DEL ESPIRITU SANTO S.A., Malambo, Atlantico, Colombia; c/o HOTEL LOS VINEDOS, La Union, Valle, Colombia; c/o FUNDACION CENTRO FRUTICOLA ANDINO, La Union, Valle, Colombia; c/o GAD S.A., La Union, Valle, Colombia; Cedula No. 6355939 (Colombia) (individual) [SDNT]

OSORIO CADAVID, Maria Victoria, c/o DERECHO INTEGRAL Y CIA. LTDA., Cali, Colombia; c/o COLOR 89.5 FM STEREO, Cali, Colombia; Cedula No. 31932294 (Colombia) (individual) [SDNT]

OSORIO VALENCIA, James Augusto, Carrera 26 No. 8–60, Cali, Colombia; Calle 4N No. 1–10, Apt. 901, Cali, Valle, Colombia; c/o INVERSIONES BRASILAR S.A., Bogota, Colombia; c/o AGROPECUARIA LINDARAJA S.A., Cali, Colombia; DOB 16 Nov 1959; POB Miranda, Cauca, Colombia; citizen Colombia; nationality Colombia; Cedula No. 14880646 (Colombia); Passport AE758158 (Colombia); alt. Passport AG940978 (Colombia) (individual) [SDNT]

OSPINA LIZALDA, Marina, c/o CHAMARTIN S.A., Cali, Colombia; c/o ADMINISTRADORA DE SERVICIOS VARIOS CALIMA S.A., Cali, Colombia; Cedula No. 31838118 (Colombia); Passport 31838118 (Colombia) (individual) [SDNT]

OSPINA PRADA, Maria del Carmen, c/o INVERSIONES INMOBILIARIA QUILICHAO S.A. Y CIA S.C.A., Cali, Colombia; Calle 98 No. 9–41, Apt. 1102, Bogota, Colombia; c/o MIRACANA INMOBILIARIA QUILCHAO S.A. & CIA S.C.A., Cali, Colombia; DOB 04 Jul 1953; POB San Luis, Tolima, Colombia; citizen Colombia; nationality Colombia; Cedula No. 41700627 (Colombia); Passport AH715906 (Colombia); alt. Passport AH456850 (Colombia) (individual) [SDNT]

OSSA AYALA, Alvaro Javier, c/o GANADERIA LUNA HERMANOS LTDA., Medellin, Colombia; c/o INVERSIONES LICOM LTDA., Medellin, Colombia; c/o CASA DEL GANADERO S.A., Medellin, Colombia; c/o INVERSIONES EL MOMENTO S.A., Medellin, Colombia; c/o SOCIEDAD MINERA GRIFOS S.A., El Bagre, Antioquia, Colombia; c/o ADMINISTRADORA GANADERA EL 45 LTDA., Medellin, Colombia; Cedula No. 98528421 (Colombia) (individual) [SDNT]

OTALORA RESTREPO, Edgar Marino, c/o DISDROGAS LTDA., Yumbo, Valle, Colombia; Cedula No. 5198602 (Colombia) (individual) [SDNT]

OTEGUI UNANUE, Mikel; DOB 8 Oct 1972; POB Itsasondo, Guipuzcoa Province, Spain; D.N.I. 44.132.976 (Spain); Member ETA (individual) [SDGT]

OUAZ, Najib (a.k.a. AL-WAZ, Najib Ben Mohamed Ben Salem), Vicolo dei Prati n.2/2, Bologna, Italy; DOB 12 Apr 1960; POB Hekaima Al-Mehdiya, Tunisia; nationality Tunisia; Passport K 815205 issued 17 Sep 1994 expires 16 Sep 1999 (individual) [SDGT]

OUTSOURCING DE OPERACIONES S.A. (a.k.a. AFIAZACREDIT; a.k.a. AVANTECARD; a.k.a. CREDIAVANTE; f.k.a. SERVICIOS Y REMESAS S.A.; a.k.a. TURISMO AVANTE), Calle 52A No. 9–86 piso 2 y piso 3, Bogota, Colombia; NIT # 805021157–8 (Colombia) [SDNT]

OVERSEAS TRADING COMPANY (a.k.a. ''DURATEX GUATEMALA''; a.k.a. ''DURATEX S.A.''), 7A Avenida 9–15, Zona 12 Colonia La Reformita, Guatemala City, Guatemala; Barrio del Monte 1 Avenida 2–51, Zona 1 Colonia ViCanales No. 4, Guatemala City, Guatemala; 20 Calle 20–81 Zona 10, Guatemala City, Guatemala; NIT # 2500971–0 (Guatemala) [SDNT]

OZIA MAZIO, Dieudonne (a.k.a. ''OMARI''); DOB 6 Jun 1949; POB Ariwara, DRC; citizen Congo, Democratic Republic of the (individual) [DRCONGO]

OZLAM PROPERTIES LIMITED, 88 Smithdown Road, Liverpool L7 4JQ, United Kingdom; Registered Charity No. 05258730 [SDGT]

PABON ALVARADO, Gustavo Alberto, c/o PROYECTOS Y SOLUCIONES INMOBILIARIA LTDA., Bogota, Colombia; c/o GERENCIA DE PROYECTOS Y SOLUCIONES LTDA., Bogota, Colombia; c/o ACUICOLA SANTA CATALINA S.A., Bogota, Colombia; Avenida 13 No. 100–12 Ofc. 302, Bogota, Colombia; c/o PROYECTOS Y SOLUCIONES S.A., Bogota, Colombia; c/o INVERSIONES MPS S.A., Bogota, Colombia; c/o HOTEL LA CASCADA S.A., Girardot, Colombia; c/o FLORIDA SOCCER CLUB S.A., Medellin, Colombia; DOB 6 May 1955; POB Bogota, Colombia; Cedula No. 79146243 (Colombia) (individual) [SDNT]

PACHECO MEJIA, Luis, Calle Paseo de Los Virreyes No. 4022, Colonia San Wenceslao, Zapopan, Jalisco, Mexico; c/o FLORIDA SOCCER CLUB S.A., Medellin, Colombia; DOB 18 Jun 1951; POB Guadalajara, Jalisco, Mexico; Passport 03140120376 (Mexico); RFC PAML–510618-ED7 (Mexico) (individual) [SDNT]

PACHECO, Rosa Elena, c/o LEMOFAR LTDA., Bogota, Colombia; DOB 2 Jan 1958; Cedula No. 36162233 (Colombia); Passport 36162233 (Colombia) (individual) [SDNT]

PADILLA ORTIZ, Marino, c/o MEGAPHARMA LTDA., Bogota, Colombia; c/o CAJA SOLIDARIA, Bogota, Colombia; Carrera 97 No. 39–75, Bogota, Colombia; c/o COPSERVIR LTDA., Bogota, Colombia; DOB 1 Aug 1965; Cedula No. 80408422 (Colombia) (individual) [SDNT]

PADRON TRUJILLO, Amado, Panama (individual) [CUBA]

PALACIO ADARVE, John Ricardo; DOB 11 Mar 1969; POB Itagui, Antioquia, Colombia; Cedula No. 70697538 (Colombia) (individual) [SDNT]

PALACIOS ALDAY, Gorka; DOB 17 Oct 1974; POB Baracaldo Vizcaya Province,

Spain; D.N.I. 30.654.356; Member ETA (individual) [SDGT]

PALESTINE ISLAMIC JIHAD—SHAQAQI FACTION (a.k.a. ABU GHUNAYM SQUAD OF THE HIZBALLAH BAYT AL-MAQDIS; a.k.a. AL-AWDAH BRIGADES; a.k.a. AL-QUDS BRIGADES; a.k.a. AL-QUDS SQUADS; a.k.a. ISLAMIC JIHAD IN PALESTINE; a.k.a. ISLAMIC JIHAD OF PALESTINE; a.k.a. PALESTINIAN ISLAMIC JIHAD; a.k.a. PIJ; a.k.a. PIJ-SHALLAH FACTION; a.k.a. PIJ-SHAQAQI FACTION; a.k.a. SAYARA AL-QUDS) [SDT] [FTO] [SDGT]

PALESTINE LIBERATION FRONT—ABU ABBAS FACTION (a.k.a. PALESTINE LIBERATION FRONT; a.k.a. PLF; a.k.a. PLF-ABU ABBAS) [SDT] [FTO] [SDGT]

PALESTINIAN ASSOCIATION IN AUSTRIA (a.k.a. PALAESTINAENSER VEREIN; a.k.a. PALAESTINAENSERVEREIN OESTERREICH; a.k.a. PALAESTINENSISCH VERBAND OESTERREICH; a.k.a. PALAESTINENSISCHE VEREINIGUNG; a.k.a. PALAESTININIENSISCHE BEREINIGUNG; a.k.a. PALESTINE LEAGUE; a.k.a. PALESTINE UNION; a.k.a. PALESTINENSISCHE VER IN STERREICH; a.k.a. PALESTINIAN ASSOCIATION; f.k.a. PALESTINIAN ISLAMIC ASSOCIATION IN AUSTRIA; f.k.a. PALESTINIAN ISLAMIC LEAGUE IN AUSTRIA; a.k.a. PALESTINIAN LEAGUE IN AUSTRIA; a.k.a. PALESTINIAN ORGANIZATION; a.k.a. PALESTINIAN UNION; a.k.a. PALESTINIAN UNION IN AUSTRIA; a.k.a. PALESTINISCHE VEREINIGUNG; a.k.a. PVOE), Novara g 36a/11, 1020 Wien, Austria [SDGT]

PALESTINIAN MARTYRS FOUNDATION (a.k.a. AL-SHAHID FOUNDATION-PALESTINIAN BRANCH; a.k.a. MUASSASAT SHAHID FILISTIN; a.k.a. PALESTINIAN MARTYRS INSTITUTION GROUP; a.k.a. SHAHID FUND), Lebanon [SDGT]

PALMA MOCHA (vessel) [CUBA]

PALMA RODRIGUEZ, Geovanny (a.k.a. PALMA RODRIGUEZ, Giovanni; a.k.a. PALMA RODRIGUEZ, Giovanny), c/o COPSERVIR LTDA., Bogota, Colombia; Carrera 8A No. 45B–82, Barranquilla, Colombia; c/o LITOPHARMA, Barranquilla, Colombia; Cedula No. 72175536 (Colombia) (individual) [SDNT]

PALMA SAADE, Jessica Maria, Calle 78 No. 53–70, Local 202, Barranquilla, Colombia; c/o VESTIMENTA J y J S. de H., Barranquilla, Colombia; Cedula No. 32758645 (Colombia) (individual) [SDNT]

PALMA SALAZAR, Hector Luis (a.k.a. PALMA SALAZAR, Jesus Hector); DOB 29 Apr 1960; alt. DOB 26 Aug 1962; alt. DOB 25 Aug 1962; POB Sinaloa, Mexico (individual) [SDNTK]

PAMIT C. SHIPPING CO., LTD., Limassol, Cyprus [CUBA]

PANAMERICAN IMPORT AND EXPORT COMMERCIAL CORPORATION, Panama [CUBA]

PANAMERICANA LTDA., Carrera 9 No. 9–46, Cali, Colombia; NIT # 800091914–8 (Colombia) [SDNT]

PANDORA SHIPPING CO. S.A., Honduras [IRAQ2]

PANDUREVIC, Vinko; DOB 1959; POB Sokolac, Bosnia-Herzegovina; ICTY indictee (individual) [BALKANS]

PANOAMERICANA, Panama [CUBA]

PAO, Hua Chiang (a.k.a. ''PAO HUA CHIANG''; a.k.a. ''TA KAT''), Panghsang, Shan, Burma (individual) [SDNTK]

PAO, Yu Hsiang (a.k.a. ''PAO YU HSIANG''; a.k.a. ''TA PANG''), Kwe Ma, Burma; DOB 19 Sep 1940 (individual) [SDNTK]

PAO, Yu Liang (a.k.a. ''PAO YU LIANG''; a.k.a. ''TA KYET''), Mong Mao, Shan, Burma (individual) [SDNTK]

PAO, Yu Yi (a.k.a. ''PAO YU YI''; a.k.a. ''TA RANG''), Panghsang, Shan, Burma (individual) [SDNTK]

PARCHIN CHEMICAL INDUSTRIES (a.k.a. PARA CHEMICAL INDUSTRIES; a.k.a. PARCHIN CHEMICAL FACTORIES; a.k.a. PARCHIN CHEMICAL INDUSTRIES GROUP; a.k.a. PCF; a.k.a. PCI), Khavaran Road Km 35, Tehran, Iran; 2nd Floor, Sanam Bldg., 3rd Floor, Sanam Bldg., P.O. Box 16765–358, Nobonyad Square, Tehran, Iran [NPWMD]

PARDO OJEDA, Mauricio, c/o G.L.G. S.A., Bogota, Colombia; c/o ILOVIN S.A., Bogota, Colombia; c/o CANADUZ S.A., Cali, Colombia; c/o KUTRY MANAGEMENT INC., Panama City, Panama; Carrera 18C No. 149–33, Apt. 309, Bogota, Colombia; c/o RAMAL S.A., Bogota, Colombia; c/o JOSAFAT S.A., Tulua, Valle, Colombia; c/o COPORACION HOTELERA DEL CARIBE LIMITADA, San Andres, Providencia, Colombia; c/o COLOMBO ANDINA COMERCIAL COALSA LTDA., Bogota, Colombia; c/o BLACKMORE INVESTMENTS A.V.V., Oranjestad, Aruba; c/o CRETA S.A., La Union, Valle, Colombia; c/o AGRONILO S.A., Toro, Valle, Colombia; c/o INVERSIONES AGROINDUSTRIALES DEL OCCIDENTE LTDA., Bogota, Colombia; c/o TARRITOS S.A., Cali, Colombia; c/o COMPANIA AGROPECUARIA DEL SUR LTDA., Bogota, Colombia; c/o ALMACAES S.A., Bogota, Colombia; DOB 27 Jul 1961; citizen Colombia; nationality Colombia; Cedula No. 19445690 (Colombia) (individual) [SDNT]

PAREDES CORDOVA, Jorge Mario (a.k.a. ARRAIZA BETANCUR, Mario Jorge; a.k.a. CORDON, Mario; a.k.a. PAREDEZ CORDOVA, Jorge Mario; a.k.a. ''EL GORDO''; a.k.a. ''HIPER''), Morazan El Progreso, Guatemala; DOB 09 Jan 1966; POB Morazan, El Progreso, Guatemala; citizen Guatemala; nationality Guatemala; Passport 1102020001107JK (Guatemala) (individual) [SDNTK]

PAREDES GONZALEZ, Nohora, c/o COPSERVIR LTDA., Bogota, Colombia; DOB 6 Aug 1963; Cedula No. 36376456 (Colombia) (individual) [SDNT]

PAREJA, Dinno Amor Rosalejos (a.k.a. AMINAH, Khalil Pareja; a.k.a. PAREJA, Dinno Rosalejos; a.k.a. PAREJA, Johnny; a.k.a. PAREJA, Kahlil; a.k.a. PAREJA, Khalil; a.k.a. ROSALEJOS-PAREJA, Dino Amor), Atimonan, Quezon Province, Philippines; DOB 19 Jul 1981; POB Cebu City, Cebu Province, Philippines; nationality Philippines (individual) [SDGT]

PARIRENYATWA, David Pagwese, P.O. Box 66222, Kopje, Harare, Zimbabwe; DOB 2 Aug 1950; Passport AD000899 (Zimbabwe); Minister of Health and Child Welfare (individual) [ZIMBABWE]

PARKA TRADING COMPANY, P.O. Box 3313, Deira, Dubai, United Arab Emirates [SDGT]

PARQUE INDUSTRIAL LAS DELICIAS LTDA., Carrera 7 No. 34–341 L–6, Cali, Colombia; Carrera 7 No. 34–341, Cali, Colombia [SDNT]

PARQUE INDUSTRIAL PROGRESO S.A., Autopista Cali Yumbo, Km. 4 No. 26–400, Yumbo, Colombia; NIT # 805002419–1 (Colombia) [SDNT]

PARRA DUQUE, Guillermo, Carrera 3 Oeste No. 11–168, Cali, Colombia; DOB 30 Dec 1964; POB Cali, Colombia; Cedula No. 16824664 (Colombia); Passport AF776832 (Colombia) (individual) [SDNT]

PARRA RESTREPO, Diego, c/o AGRO MASCOTAS S.A., Bogota, Colombia; Cedula No. 6089400 (Colombia); Passport 6089400 (Colombia) (individual) [SDNT]

PARRA RESTREPO, Pedro Nel, c/o AGRO MASCOTAS S.A., Bogota, Colombia; Cedula No. 1211206 (Colombia); Passport 1211206 (Colombia) (individual) [SDNT]

PARRA VELASCO, Edwin Hiulder, c/o PARQUE INDUSTRIAL PROGRESO S.A., Yumbo, Colombia; Calle 55BN No. 2FN–77, Cali, Colombia; DOB 18 Apr 1961; POB Cali, Valle, Colombia; Cedula No. 16672814 (Colombia); Passport 16672814 (Colombia) (individual) [SDNT]

PARS TRASH COMPANY (a.k.a. PARS TARASH; a.k.a. PARS TERASH; a.k.a. PARS TRASH), 33 Fifteenth (15th) Street, Seyed-Jamal-Eddin-Assad Abadi Avenue, Tehran, Iran [NPWMD]

PASCUAS SANTOS, Miguel Angel (a.k.a. ''HUMBERTO''; a.k.a. ''SARGENTO PASCUAS''); DOB 28 Apr 1952; POB Tello, Huila, Colombia; citizen Colombia; nationality Colombia; Cedula No. 12160124 (Colombia) (individual) [SDNTK]

PATEL, Khantibhal; DOB 28 Oct 1928; Politburo Deputy Secretary for Finance (individual) [ZIMBABWE]

PATENTES MARCAS Y REGISTROS S.A. (a.k.a. PATMAR S.A.), Transversal 29 No. 39–92, Bogota, Colombia; NIT # 830016913–0 (Colombia) [SDNT]

PATINO FOMEQUE, Sonia Daysi (a.k.a. PATINO FOMEQUE, Sonia Daicy), Calle 9 Oeste No. 25–106, Cali, Colombia; c/o INDUSTRIA DE PESCA SOBRE EL PACIFICO S.A., Buenaventura, Colombia; DOB 20 Jan 1975; Cedula No. 66920533 (Colombia) (individual) [SDNT]

PATINO FOMEQUE, Victor Julio (a.k.a. PATINO FOMEQUE, Victor Hugo), c/o TAURA S.A., Cali, Colombia; Avenida 4N No. 10N–100, Cali, Colombia; c/o INDUSTRIA DE PESCA SOBRE EL PACIFICO S.A., Buenaventura, Colombia; c/o GALAPAGOS S.A., Cali, Colombia; DOB 31 JAN 1959; Cedula No. 16473543 (Colombia) (individual) [SDNT]

PATINO RESTREPO, Carlos Arturo (a.k.a. ''PATE MURO''; a.k.a. ''PATEMURO''), Carrera 8–21, Viterbo, Caldas, Colombia; c/o COMERCIALIZADORA DE CAFE DEL OCCIDENTE CODECAFE LTDA., Pereira, Risaralda, Colombia; c/o INVERSIONES MACARNIC PATINO Y CIA S.C.S., Pereira, Risaralda, Colombia; Calle 20 No. 6–30,

Ofc. 1304, Pereira, Risaralda, Colombia; DOB 27 Apr 1964; POB La Virginia, Risaralda, Colombia; citizen Colombia; nationality Colombia; Cedula No. 9991679 (Colombia); Passport AF186124 (Colombia); alt. Passport AC455469 (Colombia); alt. Passport 9991679 (Colombia); alt. Passport PO69381 (Colombia) (individual) [SDNT]

PATINO RINCON, Octavio, c/o INVERSIONES VILLA PAZ S.A., Cali, Colombia; DOB 20 Sep 1916; Cedula No. 2438955 (Colombia) (individual) [SDNT]

PATRACA PONCE, Jorge Normando, c/o SISTEMA DE RADIO DE SINALOA, S.A. DE C.V., Culiacan, Sinaloa, Mexico; Edo. de Tabasco # 1423, Culiacan, Sinaloa, Mexico; Escobedo No. 366 Oriente, Departamento No. 102, Culiacan, Sinaloa, Mexico; Avenida Jose Maria Morelos 302 Pte, Local 3, Col. Sector Culiacan Centro, Culiacan, Sinaloa 80000, Mexico; Calle Mariano Escobedo No. 366–102, Colonia Centro, Tijuana, Baja California, Mexico; Cll Cerro de San Cayetano 728, Colinas de San Miguel, Culiacan Circuito Ceroo de la Silla, Culiacan Rosales, Culiacan, Mexico; c/o OPERADORA INTEGRAL DE COMERCIO, S.A. DE C.V., Tijuana, Baja California, Mexico; DOB 23 Apr 1974; POB Culiacan, Sinaloa, Mexico; alt. POB Tijuana, Baja California, Mexico; citizen Mexico; nationality Mexico; Electoral Registry No. PTPNJR74042325H500 (Mexico); Passport 040015561 (Mexico); R.F.C. PAPJ740423DB8 (Mexico) (individual) [SDNTK]

PATRACA, S.A. DE C.V. (a.k.a. BOUTIQUE PATRACA), Cll Jose Diego Valadez Rios 16, Plaza Patraca PB–16, Proyecto Urbano Tres Rios, Culiacan Rosales, Culiacan 80000, Mexico; Alvaro Obregon y Cerro de Montelargo Local 74M, 75M, 76M, 7 Colinas de San Miguel, Culiacan 80228, Mexico; Avenida Jose Maria Morelos 302 Pte, Local 3, Col. Sector Culiacan Centro, Culiacan, Sinaloa 80000, Mexico; Cll Jose Diego Valadez Rios 16, Plaza Patraca PB–39, Proyecto Urbano Tres Rios, Culiacan Rosales, Culiacan 80000, Mexico; Ave Alvaro Obregon No. 1800, 74M, Col. Colinas de San Miguel, Culiacan, Sinaloa 80228, Mexico; Col. Proyecto Urbano Tres Rios, Culiacan, Sinaloa, Mexico; Cll Jose Diego Valadez Rios No. 1676, Col. Proyecto Urbano Tres Rios, Culiacan, Sinaloa 80000, Mexico; Ave. Alvaro Obregon No. 1800, 74M, Col. Colinas de San Miguel, Culiacan, Sinaloa 80228, Mexico; Cll Jose Diego Valadez Rios 16, Plaza Patraca PB–24, Proyecto Urbano Tres Rios, Culiacan Rosales, Culiacan 80000, Mexico; Calle Benito Juarez, No. 302, Col. Centro, Culiacan, Sinaloa, Mexico; Cll Jose Diego Valadez Rios No. 1676, 16, Col. Proyecto Urbano Tres Rios, Culiacan, Sinaloa 80000, Mexico; Calle Benito Juarez 302 A altos S/N, Col. Centro, Culiacan, Sinaloa, Mexico; Calle Miguel Hgo No. 302, Col. Centro, Culiacan, Sinaloa, Mexico; R.F.C. PAT040318GF7 (Mexico) [SDNTK]

PATRICIA CASA DE CAMBIO, Calle Puerto 291, Zona Centro, Tijuana, Baja California, Mexico [SDNTK]

PATTERSON FARM, Mazowe, Zimbabwe [ZIMBABWE]

PAULICHENKA, Dzmitry Valeryevich (a.k.a. PAULICHENKA, Dmitri Valeryevich; a.k.a. PAULICHENKA, Dmitri Vasilyevich; a.k.a. PAULICHENKA, Dmitry Valeryevich; a.k.a. PAULICHENKA, Dmitry Vasilyevich; a.k.a. PAULICHENKA, Dzmitry Vasilyevich; a.k.a. PAVLICHENKO, Dmitri Valeryevich; a.k.a. PAVLICHENKO, Dmitri Vasilyevich; a.k.a. PAVLICHENKO, Dmitry Valeryevich; a.k.a. PAVLICHENKO, Dmitry Vasilyevich; a.k.a. PAVLICHENKO, Dzmitry Valeryevich; a.k.a. PAVLICHENKO, Dzmitry Vasilyevich; a.k.a. PAVLIUCHENKO, Dmitri Valeryevich; a.k.a. PAVLIUCHENKO, Dmitri Vasilyevich; a.k.a. PAVLIUCHENKO, Dmitry Valeryevich; a.k.a. PAVLIUCHENKO, Dmitry Vasilyevich; a.k.a. PAVLIUCHENKO, Dzmitry Valeryevich; a.k.a. PAVLIUCHENKO, Dzmitry Vasilyevich); DOB 1966; POB Vitebsk oblast, Belarus; Colonel in BKGB and Commander of the Special Response Group of the Ministry of the Interior (SOBR) (individual) [BELARUS]

PAVA GIRALDO, Dora Lilia, c/o COMERCIALIZADORA COLOMBIAN MONEY EXCHANGE LTDA., Bogota, Colombia; DOB 22 Nov 1971; POB Colombia; citizen Colombia; nationality Colombia; Cedula No. 39771709 (Colombia) (individual) [SDNTK]

PAVKOVIC, Nebojsa; DOB 10 Apr 1946; alt. DOB 16 Apr 1946; POB Senjski Rudnik, Serbia and Montenegro; Ex-VJ Chief of Staff (individual) [BALKANS]

PAVO AIRCRAFT LEASING PTE. LTD., 3 Shenton Way, #24–02 Shenton House 068805, Singapore [BURMA]

PAVO TRADING PTE. LTD., 3 Shenton Way, #24–02 Shenton House, Singapore 068805, Singapore [BURMA]

PAZ MAHECHA, Gonzalo Rodrigo, Carrera 4 No. 11–45 of. 809, Cali, Colombia; Carrera 4 No. 11–45 apt. 624, Cali, Colombia; c/o COLOR 89.5 FM STEREO, Cali, Colombia; Calle 102 No. 48A–08, Bogota, Colombia; Transversal 98 No. 28A–46, Cali, Colombia; Calle 13A No. 66B–60 apt. 102A, Cali, Colombia; Carrera 4 No. 11–45 apt. 621, Cali, Colombia; Carrera 4 No. 11–45 of. 802, Cali, Colombia; Calle 13 No. 4–25 piso 6, Cali, Colombia; Calle 13A No. 66B–60 apt. 101A, Cali, Colombia; Calle 13A No. 66B–60 apt. 902A, Cali, Colombia; DOB 28 Sep 1957; Cedula No. 16590653 (Colombia) (individual) [SDNT]

PEDRAZA GARZON, Fernando, c/o COOPERATIVA MULTIACTIVA DE COLOMBIA FOMENTAMOS, Bogota, Colombia; DOB 9 Nov 1962; Cedula No. 79283141 (Colombia); Passport 79283141 (Colombia) (individual) [SDNT]

PEJCIC, Mile (a.k.a. PEJICIC, Mile); DOB 5 Jan 1971; POB SuhoPolje, Bosnia-Herzegovina (individual) [BALKANS]

PELAEZ DE HENAO, Teresa, c/o ALFA PHARMA S.A., Bogota, Colombia; DOB 11 Jan 1928; Cedula No. 29013555 (Colombia) (individual) [SDNT]

PELAYO MENDOZA, Franco Arturo, Paseo del Pedregal 3034, Colonia Playas de Tijuana, Secc. Costa Hermosa, Tijuana, Baja California, Mexico; Calle 16 de Septiembre 3-FA, Colonia Las Torres, Tijuana, Baja California, Mexico; Calle Farallon 3206, Colonia Playas de Tijuana, Secc. Costa Hermosa, Tijuana, Baja California, Mexico; c/o INMOBILIARIA TIJUANA COSTA S.A. DE C.S., Tijuana, Baja California, Mexico; Calle Juan Covarrubias, Colonia Los Altos, Tijuana, Baja California, Mexico; Calle De La Luz 218, Colonia Playas de Tijuana, Secc. Costa Hermosa, Tijuana, Baja California, Mexico; Paseo Playas de Tijuana 317, Tijuana, Baja California, Mexico; Blvd. Insurgentes 16174–18-B, Colonia Los Alamos, Tijuana, Baja California, Mexico; DOB 2 Feb 1953; POB Casimiro Castillo, Jalisco, Mexico (individual) [SDNTK]

PELISSIER OSPINA, Maria Sair (a.k.a. PELISSIER OSPINA, Maria Sahir), c/o HEBRON S.A., Tulua, Valle, Colombia; Carrera 58B No. 63B–96 B–21 E–8 Int. 15 apt. 201, Bogota, Colombia; c/o COMERCIALIZADORA PELISSIER OSPINA LTDA., Bogota, Colombia; c/o ALMACAES S.A., Bogota, Colombia; Carrera 68D No. 64F–96 B–21 Int. 15, Bogota, Colombia; c/o CORPORACION DE ALMACENES POR DEPARTAMENTOS S.A., Bogota, Colombia; c/o G.L.G. S.A., Bogota, Colombia; c/o ILOVIN S.A., Bogota, Colombia; c/o RAMAL S.A., Bogota, Colombia; DOB 20 Jun 1958; POB Ibague, Tolima, Colombia; Cedula No. 51561790 (Colombia) (individual) [SDNT]

PENA AREVALO, Ana Isabel (a.k.a. ''DONA CHAVA''; a.k.a. ''DONA ELISA''; a.k.a. ''DONA ISA''; a.k.a. ''ISABELA''), Colombia; DOB 24 Aug 1962; POB Pacho, Cundinamarca, Colombia; citizen Colombia; nationality Colombia; Cedula No. 20794356 (Colombia) (individual) [SDNTK]

PENA TORRES, Jose, Panama (individual) [CUBA]

PENA, Victor, Panama (individual) [CUBA]

PENALOSA CAMARGO, Diego Hernando, c/o FUNDACION VIVIR MEJOR, Cali, Colombia; Cedula No. 118391 (Colombia); Passport 118391 (Colombia) (individual) [SDNT]

PENTA PHARMA DE COLOMBIA S.A., Calle 17A No. 28A–23, Bogota, Colombia; Calle 17A No. 28A–43, Bogota, Colombia [SDNT]

PENTACOOP LTDA. (f.k.a. PENTA PHARMA DE COLOMBIA S.A.), Calle 17A No. 28A–23, Bogota, Colombia; Calle 17A No. 28A–43, Bogota, Colombia; NIT # 830016989–1 (Colombia) [SDNT]

PEONY SHIPPING CO. LTD., c/o NORDSTRAND MARITIME & TRADING CO. LTD., 26 Skouze Street, Piraeus, Greece [CUBA]

PEOPLE'S CO-OPERATIVE BANK, P.O. Box 922, Khartoum, Sudan [SUDAN]

PEOPLE'S MUJAHEDIN ORGANIZATION OF IRAN (a.k.a. MEK; a.k.a. MKO; a.k.a. MUJAHEDIN-E KHALQ; a.k.a. MUJAHEDIN-E KHALQ ORGANIZATION; a.k.a. MUSLIM IRANIAN STUDENT'S SOCIETY; a.k.a. NATIONAL COUNCIL OF RESISTANCE; a.k.a. NATIONAL COUNCIL OF RESISTANCE (NCR); a.k.a. NLA; a.k.a. ORGANIZATION OF THE PEOPLE'S HOLY WARRIORS OF IRAN; a.k.a. PMOI; a.k.a. SAZEMAN-E MUJAHEDIN-E KHALQ-E IRAN; a.k.a. THE NATIONAL LIBERATION ARMY OF IRAN); including its U.S. press office and all other offices worldwide [FTO] [SDGT]

PERDOMO ZUNIGA, Hugo Ivan, c/o CONSTRUVIDA S.A., Cali, Colombia; DOB 16 Jun 1960; Cedula No. 16669843 (Colombia) (individual) [SDNT]

PEREGRINA TOBOADA, Jose Antonio (a.k.a. PEREGRINA TOBOADO, Jose Antonio), c/o JAMARO CONSTRUCTORES S.A. DE C.V., Culiacan, Sinaloa, Mexico; c/o NUEVA INDUSTRIA DE GANADEROS DE CULIACAN S.A. DE C.V., Culiacan, Sinaloa, Mexico; Calle Pirul # 439, Privada Balcones de San Miguel, Culiacan, Sinaloa, Mexico; DOB 05 Aug 1958; POB Culiacan, Sinaloa, Mexico; citizen Mexico; nationality Mexico; C.U.R.P. PETA580805HSLRBN09 (Mexico) (individual) [SDNTK]

PEREIRA BERUMEN, Luis Miguel, c/o MULTISERVICIOS GAMAL, S.A. DE C.V., Tijuana, Baja California, Mexico; Calle Relampago 1136 Secc. Dorado, Tijuana, Baja California, Mexico; DOB 10 Sep 1975 (individual) [SDNTK]

PEREZ ALZATE, Guillermo (a.k.a. ''PABLO SEVILLANO''), Calle 24 No. 1–52, B. Cta de Oro, Colombia; Calle 37 No. 2–40, Almacen Dulcino, Tumaco, Narino, Colombia; Diagonal 50 No. 49–14 of. 601, Medellin, Colombia; Calle 26A No. 70–35, Medellin, Colombia; Calle 30 No. 9–51, Monteria, Cordoba, Colombia; Cedula No. 71646827 (Colombia); Passport AF891052 (Colombia) (individual) [SDNTK]

PEREZ ARAMBURU, Jon Inaki; DOB 18 Sep 1964; POB San Sebastian, Guipuzcoa Province, Spain; D.N.I. 15.976.521 (Spain); Member ETA (individual) [SDGT]

PEREZ CASTANO, Mario Alberto, Calle Decima No. 14, Hidalgo del Parral, Chihuahua, Mexico; c/o CAMBIOS PALMILLA S.A. DE C.V., Hidalgo del Parral, Mexico; DOB 25 Jun 1966; POB Hidalgo del Parral, Chihuahua, Mexico; citizen Mexico; nationality Mexico; C.U.R.P. PECM660625HCHRSR07 (Mexico); R.F.C. PECM–660625-FN5 (Mexico) (individual) [SDNTK]

PEREZ CRUZ, Osvaldo, Panama (individual) [CUBA]

PEREZ ELIAS, Sofia, c/o MULTISERVICIOS ALPHA, S.A. DE C.V., Tijuana, Baja California, Mexico; Calle Oslo 3692, Colonia Playas Costa Azul, Tijuana, Baja California CP 22250, Mexico; c/o HACIENDA DE DON JOSE RESTAURANT BAR, S.A. DE C.V., Tijuana, Baja California, Mexico; DOB 10 Oct 1973; POB Tijuana, Baja California, Mexico (individual) [SDNTK]

PEREZ GARCIA, Carlos, c/o ASESORIAS COSMOS LTDA., Cali, Colombia; Cedula No. 14920419 (Colombia) (individual) [SDNT]

PEREZ GOMEZ, Stella, c/o CONTACTEL COMUNICACIONES S.A., Cali, Colombia; c/o PROVIDA E.U., Cali, Colombia; c/o DISTRIBUIDORA SANAR DE COLOMBIA S.A., Cali, Colombia; c/o COPSERVIR LTDA., Bogota, Colombia; c/o ASESORIAS ECONOMICAS MUNOZ SANTACOLOMA E.U., Cali, Colombia; DOB 26 Jun 1960; Cedula No. 31848468 (Colombia); Passport 31848468 (Colombia) (individual) [SDNT]

PEREZ NARVAEZ, Oliverio, c/o INTERCONTINENTAL DE AVIACION S.A., Bogota, Colombia; Avenida 4 No. 7–75, Cali, Colombia; DOB 9 Mar 1938; POB Riofrio, Valle, Colombia; Cedula No. 6488451 (Colombia); Passport AG069729 (Colombia); alt. Passport AG400146 (Colombia) (individual) [SDNT]

PEREZ ORTEGA, Publio Eliecer, c/o INVERSIONES VILLA PAZ S.A., Cali, Colombia; DOB 23 Jul 1954; Cedula No. 16597479 (Colombia) (individual) [SDNT]

PEREZ PASUENGO, Efrain; DOB 1954; nationality Mexico (individual) [SDNTK]

PEREZ SERNA, Wilmar Armando, c/o INVHERESA S.A., Cali, Colombia (individual) [SDNT]

PEREZ VARELA, Jaime Diego, c/o CONSTRUCTORA GOPEVA LTDA., Cali, Colombia; Avenida Ciudad Jardin No. 27, Cali, Colombia; DOB 28 Feb 1933; Cedula No. 2695666 (Colombia) (individual) [SDNT]

PEREZ VERDUZCO, Roberto (a.k.a. PEREZ VERDUGO, Roberto), c/o SEPRIV, S.A. DE C.V., Culiacan, Sinaloa, Mexico; Calle Cerro Agudo No. 3191, Colonia Loma Linda, Culiacan, Sinaloa, Mexico; DOB 29 Oct 1963; POB Culiacan, Sinaloa, Mexico; citizen Mexico; nationality Mexico; C.U.R.P. PEVR631029HSLRRB06 (Mexico); Passport 040049618 (Mexico); R.F.C. PEVR6310292D8 (Mexico) (individual) [SDNTK]

PEREZ, Alfonso, Panama (individual) [CUBA]

PEREZ, Manuel Martin, Panama (individual) [CUBA]

PERIC, Jozo 'Tukesa'; DOB 31 Jan 1959; POB Pjesevac Kula, Bosnia-Herzegovina (individual) [BALKANS]

PERSIA INTERNATIONAL BANK PLC, 6 Lothbury, London EC2R 7HH, United Kingdom; Dubai International Financial Centre, Level 4, The Gate Building, P.O. Box 119871, Dubai, United Arab Emirates; all offices worldwide [NPWMD]

PERSIAN GULF (a.k.a. IRAN PERSIAN GULF); Vessel Registration Identification IMO 9305221 (vessel) [NPWMD]

PERU GLOBAL TOURS S.A.C., Calle Soledad 113, Oficina 301, Lima, Peru; RUC # 20509567418 (Peru) [SDNTK]

PERU TOTAL MARKET E.I.R.L., Jr. Washington 1214, Lima, Peru; RUC # 20512036661 (Peru) [SDNTK]

PERUVIAN PRECIOUS METALS S.A.C., Jr. Comunidad Industrial 293, Chorillos, Lima, Peru; RUC # 20502799445 (Peru) [SDNTK]

PESCABRAVA, S.A., France [CUBA]

PESCABRAVA, S.A., Italy [CUBA]

PESCABRAVA, S.A., Spain [CUBA]

PESCADOS Y MARISCOS DE PANAMA, S.A. (a.k.a. PESMAR (OR PEZMAR), S.A.), Panama City, Panama [CUBA]

PETRA NAVIGATION & INTERNATIONAL TRADING CO. LTD. (a.k.a. AL PETRA COMPANY FOR GOODS TRANSPORT LTD), Hai Al Wahda Mahalat 906, 906 Zulak 50, House 14, Baghdad, Iraq [IRAQ2]

PETRIC, Zoran; DOB 18 Jul 1964; POB Banovici, Bosnia-Herzegovina (individual) [BALKANS]

PETROHELP PETROLEUM COMPANY LIMITED, Building No. 20, Street No. 42, Al Riyadh Area, P.O. Box 44690, Khartoum, Sudan [SUDAN]

PETROLEUM GENERAL ADMINISTRATION, P.O. Box 2649, Khartoum, Sudan [SUDAN]

PHUANGPHET, Suwit (a.k.a. PUANGPETCH, Suvit; a.k.a. PUANGPETCH, Suwit), c/o PROGRESS SURAWEE COMPANY LTD., Bangkok, Thailand; c/o SCORE COMMERCIAL COMPANY LTD., Bangkok, Thailand; DOB 28 Oct 1956; National ID No. 3570900170841 (Thailand) (individual) [SDNTK]

PIATKEVICH, Natallia Uladzimirauna (a.k.a. PETKEVICH, Nataliya Uladzimirauna; a.k.a. PETKEVICH, Nataliya Vladimirovna; a.k.a. PETKEVICH, Natallia Uladzimirauna; a.k.a. PETKEVICH, Natallia Vladimirovna; a.k.a. PETKEVICH, Natalya Uladzimirauna; a.k.a. PETKEVICH, Natalya Vladimirovna; a.k.a. PIATKEVICH, Natalya Vladimirovna; a.k.a. PIATKEVICH, Nataliya Uladzimirauna; a.k.a. PIATKEVICH, Nataliya Vladimirovna; a.k.a. PIATKEVICH, Natallia Vladimirovna; a.k.a. PIATKEVICH, Natalya Uladzimirauna); DOB 24 Oct 1972; POB Minsk, Belarus; Deputy Head of the President's Administration (individual) [BELARUS]

PICHAYOS, Winai (a.k.a. PHITCHAIYOT, Winai; a.k.a. PHITCHAYOT, Winai; a.k.a. PICHAYOS, Vinai; a.k.a. PICHAYOT, Vinai; a.k.a. PITCHAYOS, Vinai; a.k.a. THICHAIYOT, Winai; a.k.a. TICHYOS, Vinai), c/o GREEN CAR RENT LIMITED PARTNERSHIP, Bangkok, Thailand; c/o RUNGRIN COMPANY LTD., Bangkok, Thailand; c/o HATKAEW COMPANY LTD., Bangkok, Thailand; c/o SCORE COMMERCIAL COMPANY LTD., Bangkok, Thailand; c/o BANGKOK ARTI-FLORA DESIGN LIMITED PARTNERSHIP, Bangkok, Thailand; c/o NICE FANTASY GARMENT COMPANY LTD., Bangkok, Thailand; c/o PROGRESS SURAWEE COMPANY LTD., Bangkok, Thailand; DOB 1 Dec 1957; Passport K203350 (Thailand) (individual) [SDNTK]

PIEDMONT (UK) LIMITED, Newboundary House, London Road, Sunningdale, Ascot, Berkshire SL5 0DJ, United Kingdom [ZIMBABWE]

PIEDRAHITA GIRALDO, Gustavo Adolfo, Calle 1A No. 62A–120, Cali, Colombia; c/o AGROPECUARIA LA ROBLEDA S.A., Cali, Colombia; Cedula No. 16764002 (Colombia) (individual) [SDNT]

PIMENTO FARM, Mashonaland, Zimbabwe [ZIMBABWE]

PINA DE ARCE, Delia, c/o PROMOTORA FIN, S.A., Tijuana, Baja California, Mexico; DOB 6 Aug 1942; POB Sonora, Mexico; citizen Mexico; nationality Mexico; C.U.R.P. PIXD420806MSRXXL07 (Mexico) (individual) [SDNTK]

PINECONE (f.k.a. GRETE) (vessel) [CUBA]

PINEDA PALMERA, Juvenal Ovidio (a.k.a. PALMERA PINEDA, Juvenal Ovidio Ricardo; a.k.a. ''SIMON TRINIDAD''); DOB 30 Jul 1950; POB Bogota, Cundinamarca, Colombia; Cedula No. 12715418 (Colombia); alt. Cedula No. 12751418 (Colombia); alt. Cedula No. 12715416 (Colombia); Passport AH182002 (Colombia); alt. Passport AC204175 (Colombia); alt. Passport T757205 (Colombia) (individual) [SDNTK]

PINEROS LEON, Miguel Esteban, c/o COPSERVIR LTDA., Bogota, Colombia;

Carrera 50 No. 173–12, Bogota, Colombia; Cedula No. 468712 (Colombia) (individual) [SDNT]
PINO DEL AGUA (vessel) [CUBA]
PINSKY SARAGOVIA, Ezequiel, c/o CIA. MINERA DAPA S.A., Bogota, Colombia; c/o CONSTRUCTORA PYNZAR LTDA., Cali, Colombia; Avenida Las Americas No. 21N–50, Cali, Colombia; c/o PYZA E.U., Cali, Colombia; c/o NOVAPINSKI LTDA., Cali, Colombia; c/o PARQUE INDUSTRIAL PROGRESO S.A., Yumbo, Colombia; Cedula No. 14932390 (Colombia); Passport 14932390 (Colombia) (individual) [SDNT]
PINZON CEDIEL, John Jairo, c/o TAURA S.A., Cali, Colombia; Cedula No. 13542103 (Colombia) (individual) [SDNT]
PINZON POVEDA, Marco Antonio, c/o DEPOSITO POPULAR DE DROGAS S.A., Cali, Colombia; c/o DISTRIBUIDORA DE DROGAS CONDOR LTDA., Bogota, Colombia; Carrera 65 No. 13B–125 apt. 307, Cali, Colombia; DOB 21 Dec 1948; Cedula No. 17801803 (Colombia) (individual) [SDNT]
PIONEER ENERGY INDUSTRIES COMPANY (a.k.a. PISHGAM ENERGY INDUSTRIES DEVELOPMENT; a.k.a. ''PEI''), P.O. Box 81465–361, Isfahan, Iran [NPWMD]
PIONEER SHIPPING LTD., 171 Old Bakery Street, Valletta, Malta; c/o Anglo Caribbean Shipping Co., Ltd., 4th Floor, South Phase 2, South Quay Plaza 2, 183 Marsh Wall, London E14 9SH, United Kingdom [CUBA]
PIRAMIDE INTERNATIONAL, Panama [CUBA]
PIRANHA NAVIGATION CO. LTD., c/o NORDSTRAND MARITIME & TRADING CO. LTD., 26 Skouze Street, Piraeus, Greece [CUBA]
PITONO, Joko (a.k.a. ABDUL MARTIN; a.k.a. ABDUL MATIN; a.k.a. AMAR UMAR; a.k.a. AMAR USMAN; a.k.a. ANAR USMAN; a.k.a. DJOKO SUPRIYANTO; a.k.a. DUL MATIN; a.k.a. DULMATIN; a.k.a. JAK IMRON; a.k.a. MUKTAMAR; a.k.a. NOVARIANTO; a.k.a. PINTONO, Joko; a.k.a. PITOYO, Joko; a.k.a. TOPEL); DOB 16 Jun 1970; alt. DOB 6 Jun 1970; POB Petarukan village, Pemalang, Central Java, Indonesia; nationality Indonesia (individual) [SDGT]
PLASTEC LTDA., Km. 1 Via Jardines, Armenia, Quindio, Colombia; NIT # 801000358–7 (Colombia) [SDNT]
PLASTICOS CONDOR LTDA., Carrera 13 No. 16–62, Cali, Colombia [SDNT]
PLAVSIC, Biljana; DOB 7 Jul 1930; POB Tuzla, Bosnia-Herzegovina; ICTY indictee (individual) [BALKANS]
PLAYA MAR S.A. DE C.V., Entre Via Rapida y Jose Clemente Orozco, Tijuana, Baja California, Mexico; Paseo De Los Heroes, Colonia Rio Tijuana 2110, Tijuana, Baja California, Mexico; Blvd. Agua Caliente 10440, Colonia Aviacion 22420, Tijuana, Baja California, Mexico; R.F.C. # PMA–910805 (Mexico) [SDNTK]
PLAZA REAL LTDA., Avenida 4 Oeste No. 6–103, Cali, Colombia; NIT # 890331686–1 (Colombia) [SDNT]
PLOYDAENG JEWELRY SHOP (a.k.a. PLOYDAENG GEM SHOP; a.k.a. PLYDAENG JEWELRY SHOP), 4/1–2 Ratdamri Road, World Trade Center, 1st Floor, Room B135, Lumphini precinct, Pathum Wan district, Bangkok, Thailand; 4/1–2 Rajdamri Road, Central World Plaza, Pathumwan, Bangkok, Thailand [SDNTK]
PLUS TECH AUTO SUPPLY COMPANY LTD., 273 Thiam Ruammit Road, Huai Khwang district, Bangkok, Thailand [SDNTK]
PMOI (a.k.a. MEK; a.k.a. MKO; a.k.a. MUJAHEDIN-E KHALQ; a.k.a. MUJAHEDIN-E KHALQ ORGANIZATION; a.k.a. MUSLIM IRANIAN STUDENT'S SOCIETY; a.k.a. NATIONAL COUNCIL OF RESISTANCE; a.k.a. NATIONAL COUNCIL OF RESISTANCE (NCR); a.k.a. NLA; a.k.a. ORGANIZATION OF THE PEOPLE'S HOLY WARRIORS OF IRAN; a.k.a. PEOPLE'S MUJAHEDIN ORGANIZATION OF IRAN; a.k.a. SAZEMAN-E MUJAHEDIN-E KHALQ-E IRAN; a.k.a. THE NATIONAL LIBERATION ARMY OF IRAN); including its U.S. press office and all other offices worldwide [FTO] [SDGT]
PO, Kong (a.k.a. PU, Chiang; a.k.a. ''PO KONG''; a.k.a. ''P'U LI''), c/o TING SHING TAI JEWELLERY (HK) CO. LIMITED, Hong Kong, Hong Kong; Flat 6, 2/F, Block 49, Heng Fa Chuen, Chai Wan, Hong Kong; c/o HONG PANG GEMS & JEWELLERY (HK) CO. LIMITED, Mandalay, Yunnan, Hong Kong; c/o SHUEN WAI HOLDING LIMITED, Hong Kong, Hong Kong; Flat B, 16/F, Dragon View, No. 5 Dragon Terrace, Hong Kong; DOB 01 Sep 1944; National ID No. K357514(4) (Hong Kong); Passport H90011666 (Hong Kong) (individual) [SDNTK]
POCHO NAVIGATION CO. LTD., c/o EMPRESA DE NAVEGACION MAMBISA, Apartado 543, San Ignacio 104, Havana, Cuba [CUBA]
PODOBED, Yury Nikolaevich (a.k.a. POBOBED, Yuri Nikolaevich); DOB 5 Mar 1962; POB Slutsk, Minsk district, Belarus; citizen Belarus; nationality Belarus; Commander of the Special Riot Police in Minsk (OMON) (individual) [BELARUS]
POLIEMPAQUES LTDA., Carrera 13A No. 16–49, Cali, Colombia; Carrera 13A No. 16–55, Cali, Colombia; Carrera 13 No. 16–62, Cali, Colombia; NIT # 805003763–5 (Colombia) [SDNT]
POLITICAL COUNCIL OF PRESEVO, MEDVEDJA, AND BUJANOVAC (a.k.a. PCPMB) [BALKANS]
POLOTSK STEKLOVOLOKNO OAO (a.k.a. POLOTSK PRODUCTION ASSOCIATION STEKLOVOLOKNO; a.k.a. POLOTSKOE STEKLOVOLOKNO OAO; a.k.a. POLOTSK-STEKLOVOLOKNO; a.k.a. POLOTSK-STEKLOVOLOKNO JSC; a.k.a. POLOTSK-STEKLOVOLOKNO JSC SD STEKLOKOMPOZIT; a.k.a. POLOTSK-STEKLOVOLOKNO OPEN JOINT-STOCK COMPANY; a.k.a. POLOTZK STEKLOVOLOKNO OAO; a.k.a. STEKLOVOLOKNO), Industrial Zone Ksty, Vitebsk Region, Polotsk 21140, Belarus; ul. Stroitelnaya, Polotsk, 211412, Belarus; Ksty Industrial Zone, 211400 Vitebskaya oblast, Polotsk, Belarus; Promuzel Ksty, Polotsk 211400, Belarus [BELARUS]
PONCE DE LEON GOMEZ, Lazaro, Medira, Mexico (individual) [CUBA]
POPOV, Dimitri Igorevich; DOB 13 Feb 1961; alt. DOB 13 Feb 1965; POB Irkutsk, Russia; General Manager, Great Lakes Business Company and Compagnie Aerienne des Grands Lacs (individual) [DRCONGO]
POPOVIC, Vujadin; DOB 14 Mar 1957; ICTY indictee (individual) [BALKANS]
POPULAR FRONT FOR THE LIBERATION OF PALESTINE (a.k.a. HALHUL GANG; a.k.a. HALHUL SQUAD; a.k.a. MARTYR ABU-ALI MUSTAFA BATTALION; a.k.a. PALESTINIAN POPULAR RESISTANCE FORCES; a.k.a. PFLP; a.k.a. PPRF; a.k.a. RED EAGLE GANG; a.k.a. RED EAGLE GROUP; a.k.a. RED EAGLES) [SDT] [FTO] [SDGT]
POPULAR FRONT FOR THE LIBERATION OF PALESTINE—GENERAL COMMAND (a.k.a. PFLP-GC) [SDT] [FTO] [SDGT]
POPULAR MOVEMENT OF KOSOVO (a.k.a. LPK) [BALKANS]
PORT SUDAN COTTON AND TRADE COMPANY (a.k.a. PORT SUDAN COTTON COMPANY), P.O. Box 590, Khartoum, Sudan; P.O. Box 261, Port Sudan, Sudan [SUDAN]
PORT SUDAN DUTY FREE SHOP, Port Sudan, Sudan [SUDAN]
PORT SUDAN EDIBLE OILS STORAGE CORPORATION, P.O. Box 429, Port Sudan, Sudan [SUDAN]
PORT SUDAN REFINERY LIMITED, P.O. Box 354, Port Sudan, Sudan [SUDAN]
PORT SUDAN SPINNING FACTORY, Port Sudan, Sudan [SUDAN]
PORTILLA BARRAZA, Jorge, c/o ORIENTE CONTRATISTAS GENERALES S.A., Trujillo, Peru; Pasaje Vincente Morales, Poblacion 11 de Septiembre, Arica, Chile; DOB 26 Feb 1948; D.N.I. 52249376 (Chile) (individual) [SDNTK]
POSSO DE GRAJALES, Elba Myriam, c/o INVERSIONES AGUILA LTDA., La Union, Valle, Colombia; c/o GRAJALES S.A., La Union, Valle, Colombia; c/o CASA GRAJALES S.A., La Union, Valle, Colombia; c/o FREXCO S.A., La Union, Valle, Colombia; c/o IBADAN LTDA., Tulua, Valle, Colombia; Cedula No. 29611241 (Colombia) (individual) [SDNT]
POSSO DE LONDONO, Maria del Carmen, c/o INVERSIONES VILLA PAZ S.A., Cali, Colombia; Cedula No. 29664243 (Colombia) (individual) [SDNT]
POSSO, Maria Esperanza, c/o FRUTAS DE LA COSTA S.A., Malambo, Atlantico, Colombia; c/o CONSTRUCCIONES E INVERSIONES LTDA., La Union, Valle, Colombia; c/o DOXA S.A., La Union, Valle, Colombia; c/o HOTEL LOS VINEDOS, La Union, Valle, Colombia; c/o INDUSTRIAS DEL ESPIRITU SANTO S.A., Malambo, Atlantico, Colombia; c/o TRANSPORTES DEL ESPIRITU SANTO S.A., La Union, Valle, Colombia; Cedula No. 29613348 (Colombia) (individual) [SDNT]
POSTS AND TELEGRAPHS PUBLIC CORPORATION, Khartoum, Sudan [SUDAN]
POTE, Selina; Deputy Secretary for Gender and Culture (individual) [ZIMBABWE]
PRADO CUERO, Salomon (a.k.a. CHALO), Carrera 101B No. 11B–50, Cali, Colombia; c/o COLOR 89.5 FM STEREO, Cali, Colombia; Avenida 26 No. 42B–89, Bogota, Colombia; DOB 1 Aug 1948; Cedula No. 19069493 (Colombia); Passport AE801105 (Colombia) (individual) [SDNT]
PRAPATWORA, Atchara (a.k.a. ATCHARA, Chiwinpraphasri; a.k.a. ATCHARA,

Praptwora; a.k.a. ATCHARA, Samsaeng; a.k.a. SAENGKHAM, Samsaeng), 88/2 Soi Klong Nam Kaew, Tambon Sam Sen Nok, Huay Khwang, Bangkok, Thailand; c/o DEHONG THAILONG HOTEL CO., LTD., Yunnan Province, China; DOB 09 Sep 1948; National ID No. 3509900001907 (Thailand) expires Sep 2006; Passport V487440 (Thailand) expires May 2007 (individual) [SDNTK]

PRCAC, Dragoljub; DOB 18 Jul 1937; POB Omarska, Bosnia-Herzegovina; ICTY indictee (individual) [BALKANS]

PRECIADO ESCOBAR, Ricardo, c/o OPERADORA DE CAJA Y SERVICIOS, S.A. DE C.V., Tijuana, Baja California, Mexico; DOB 13 Nov 1953; POB Baja California, Mexico; citizen Mexico; nationality Mexico; C.U.R.P. PEER531113HBCRSC04 (Mexico) (individual) [SDNTK]

PRELASA, Mexico [CUBA]

PRENSA LATINA, Spain [CUBA]

PRENSA LATINA CANADA LTD., 1010 O Rue Ste. Catherine, Montreal PQ H303 IGI, Canada [CUBA]

PRESA, S.A., Panama [CUBA]

PRETTY SEA (a.k.a. IRAN PRETTY SEA (KHUZESTAN)); Vessel Registration Identification IMO 9167277 (vessel) [NPWMD]

PREVIA S.A. (a.k.a. PREVENCION Y ANALISIS DE RIESGOS), Carrera 3 No. 10–20 of. 202, Cali, Colombia; Carrera 3 No. 12–40 of. 504, Cali, Colombia [SDNT]

PRIETO SANTIAGO, Sandra Milena, c/o ASESORES CONSULTORES ASOCIADOS LTDA., Cali, Colombia; c/o FRUTAS EXOTICAS COLOMBIANOS S.A., La Union, Valle, Colombia; c/o CRETA S.A., La Union, Valle, Colombia; DOB 21 Jan 1970; POB Roldanillo, Valle, Colombia; Cedula No. 66702878 (Colombia); Passport AG784916 (Colombia) (individual) [SDNT]

PRIMA EXPORT/IMPORT, Jamaica [CUBA]

PRIVREDNA BANKA SARAJEVO AD (a.k.a. PRIVREDNA BANKA AD SRPSKO SARAJEVO), Ljube Milanovica Str 12, Trebinje, Republika Srpska, Bosnia and Herzegovina; Dobroslava Jedevica 14, 71000 Pale, Republika Srpska, Bosnia and Herzegovina; Kralja Nikole Str 65, Srbinje/Foca, Republika Srpska, Bosnia and Herzegovina; Str Srpskih Ratnika br 14, 71420 Pale, Republika Srpska, Bosnia and Herzegovina; Filipa Kljajica Str 6, Zvornik, Republika Srpska, Bosnia and Herzegovina; 9/11 Str Zagrebacka, Belgrade 11000, Serbia; SWIFT/BIC PRSS BA 22 [BALKANS]

PROCESADORA DE POLLOS SUPERIOR S.A. (a.k.a. COMERCIALIZADORA INTERNACIONAL VALLE DE ORO S.A.), Avenida 2N No. 7N–55 of. 521, Cali, Colombia; Carrera 3 No. 12–40, Cali, Colombia; A.A. 1689, Cali, Colombia; Km 17 Recta Cali-Palmira, Palmira, Colombia; NIT # 800074991–3 (Colombia) [SDNT]

PRODUCCIONES CARNAVAL DEL NORTE Y COMPANIA LIMITADA, Calle 22N No. 5A-75 05, Cali, Colombia; NIT # 800250531–3 (Colombia) [SDNT]

PRODUCTOS FARMACEUTICOS COLLINS, S.A. DE C.V. (a.k.a. GRUPO COLLINS; a.k.a. GRUPO FARMACEUTICO COLLINS; a.k.a. LABORATORIOS COLLINS), Prolongacion Lopez Mateos 1938, Colonia Agua Blanca, Zapopan, Jalisco 45070, Mexico; Puerto Soto La Marina 1632 A, Guadalajara, Jalisco 44330, Mexico; Avenida Lopez Mateos No. 1938, Colonia Agua Blanca, Zapopan, Jalisco 45070, Mexico; Calle Vicente Guerrero 337, Colonia Agua Blanca, Zapopan, Jalisco 44008, Mexico; Calle Agua Prieta 1100, Colonia Agua Blanca, Zapopan, Jalisco 44008, Mexico; Pedro de Alacron No. 167, Zapopan, Jalisco, Mexico; Cipres No. 1677, Colonia Del Fresno, Guadalajara, Jalisco 44900, Mexico; R.F.C. PFC8301273D1 (Mexico) [SDNTK]

PRODUCTOS GALO Y CIA. LTDA., Avenida 42 No. 20–47, Bogota, Colombia; Apartado Aereo 58263, Bogota, Colombia; NIT # 800102729–0 (Colombia) [SDNT]

PROGRESS SURAWEE COMPANY LTD. (a.k.a. BORISAT PROKRET SURAWI CHAMKAT), 275 Soi Thiam Ruammit, Ratchada Phisek Road, Huai Khwang district, Bangkok, Thailand [SDNTK]

PROHUEVO DE COLOMBIA LTDA., Calle 34 No. 5A–25, Cali, Colombia; Granja Pio Pio Carretera Cali-Candelaria Km 12, Cali, Colombia; 1 Km Antes de Cavasa Palmira-Cali, Colombia; NIT # 800089683–5 (Colombia) [SDNT]

PROMOCIONES ARTISTICAS (a.k.a. PROARTE), Avenida Insurgentes Sur No. 421, Bloque B Despacho 404, C.P. 06l00, Mexico, D.F., Mexico [CUBA]

PROMOCIONES E INVERSIONES LAS PALMAS S.A. (a.k.a. PROPALMAS S.A.), Carrera 9 No. 100–97 Ofc. 412, Bogota, Colombia; NIT # 800236023–5 (Colombia) [SDNT]

PROMOCIONES Y CONSTRUCCIONES DEL CARIBE LTDA., Carrera 54 No. 72–147, Barranquilla, Colombia; Carrera 54 No. 72–80 Ejecutivo I, Barranquilla, Colombia; Calle 74 No. 53–30, Barranquilla, Colombia; Carrera 56 No. 70–60, Barranquilla, Colombia; Carrera 55 No. 72–109 Piso 1, Barranquilla, Colombia; Calle 78 No. 53–70 Centro Comercial Villa Country, Barranquilla, Colombia; Carrera 57 No. 79–149, Barranquilla, Colombia; NIT # 890108115–3 (Colombia) [SDNT]

PROMOCIONES Y CONSTRUCCIONES DEL CARIBE LTDA. Y CIA. S.C.A. (a.k.a. PROMOCON), Carrera 54 No. 72–147 L–115, Barranquilla, Colombia; Carrera 55 No. 80–192 Ap. 6, Barranquilla, Colombia; Apartado Aereo 51110, Barranquilla, Colombia; Apartado Aereo 50183, Barranquilla, Colombia; Carrera 55 No. 80–192, Barranquilla, Colombia; Carrera 54 No. 72–80 L–21 Ejecutivo I, Barranquilla, Colombia; Calle 74 No. 53–30, Barranquilla, Colombia; Calle 78 No. 53–70 Centro Comercial Villa Country, Barranquilla, Colombia; NIT # 890108148–6 (Colombia) [SDNT]

PROMOTORA ANDINA, S.A., Quito, Ecuador [CUBA]

PROMOTORA FIN, S.A. (a.k.a. PROFINSA; a.k.a. PROMOTORA FIN, S.A. DE C.V.), Agua Caliente Blvd. 122 A, Cacho, Tijuana, Baja California, Mexico; Calle 3ra, Carrillo Puerto 216, 4to Piso, Zona Centro, Tijuana, Baja California, Mexico; 3ra. Carrillo Puerto 216 1, Zona Central, Avenida Madero y Avenida Negrete, Tijuana, Baja California, Mexico; R.F.C. PFI–801023–519 (Mexico) [SDNTK]

PROMOTORA HOTEL BARRANQUILLA LTDA., Calle 74 No. 53–30, Barranquilla, Colombia; Apartado Aereo 51110, Barranquilla, Colombia; NIT # 890111684–3 (Colombia) [SDNT]

PROMOTORES DE BIENES RAICES S.A. (a.k.a. PROMOBIENES S.A.), Calle 20N No. 6AN–19 ofc. 67, Cali, Colombia; NIT # 805001651–1 (Colombia) [SDNT]

PROSALUD Y BIENESTAR S.A. (a.k.a. PROSALUD CENTROS MEDICOS Y DROGUERIA), Calle 2 No. 4–70/72, Cali, Colombia; Carrera 7P No. 76–04, Cali, Colombia; Carrera 4N No. 81–04 esq., Cali, Colombia; Carrera 2 No. 52–27, Cali, Colombia; Carrera 2 No. 20–47, Cali, Colombia; Calle 22A No. 10–54, Cali, Colombia; Carrera 15 No. 34–102, Cali, Colombia; Calle 19 No. 6–31, Cali, Colombia; Carrera 46 No. 37–03, Cali, Colombia; Calle 44 No. 4N–74, Cali, Colombia; Carrera 94 No. 4–76, Cali, Colombia; Carrera 29 No. 45–84, Cali, Colombia; Calle 23 No. 28–11, Cali, Colombia; Calle 71A No. 1D–07, Cali, Colombia; NIT # 890311169–1 (Colombia) [SDNT]

PROSPECTIVA EMPRESA UNIPERSONAL (a.k.a. PROSPECTIVA E.U.), Calle 29 Norte No. 6N–43, Cali, Colombia; Calle 18 No. 106–98, of. 302 and 303, Cali, Colombia; NIT # 805006189–0 (Colombia) [SDNT]

PROVIDA E.U. (a.k.a. PROVIDA LABORATORIO CLINICO Y PATALOGIA; a.k.a. PROVIDA Y DISENO), Carrera 44 No. 5B–27, Cali, Colombia; Carrera 94 No. 4–76, Cali, Colombia; Calle 44 No. 4N–74, Cali, Colombia; Calle 71A No. 1D–07, Cali, Colombia; Carrera 15 No. 34–102, Cali, Colombia; Carrera 2 No. 52–27, Cali, Colombia; Carrera 46 No. 37–03, Cali, Colombia; Carrera 7P No. 76–04, Cali, Colombia; Calle 22A No. 10–54, Cali, Colombia; Calle 23 No. 28–11, Cali, Colombia; Carrera 29 No. 45–84, Cali, Colombia; Carrera 4N No. 81–04, Cali, Colombia; Calle 19 No. 6–31, Cali, Colombia; Quito, Ecuador; NIT # 805016716–5 (Colombia) [SDNT]

PROYECTOS J.A.M. LTDA., Carrera 54 No. 72–147, Barranquilla, Colombia; Carrera 53 No. 74–16, Barranquilla, Colombia; Calle 77 No. 65–37 L–6, Barranquilla, Colombia; NIT # 800234529–0 (Colombia) [SDNT]

PROYECTOS J.A.M. LTDA. Y CIA. S. EN C., Carrera 53 No. 74–16 of. 401, Barranquilla, Colombia; Calle 74 No. 53–23 of. 401, Barranquilla, Colombia; Calle 74 No. 53–23 L–503, Barranquilla, Colombia; Carrera 53 No. 74–16, Barranquilla, Colombia; NIT # 800243483–9 (Colombia) [SDNT]

PROYECTOS Y SOLUCIONES INMOBILIARIA LTDA. (f.k.a. PROMOTORA DE PROYECTOS Y SOLUCIONES LTDA.), Avenida 13 No. 100–12 Ofc. 302, Bogota, Colombia; NIT # 800014349–8 (Colombia) [SDNT]

PROYECTOS Y SOLUCIONES S.A., Carrera 63 No. 17–07, Bogota, Colombia; NIT # 800231601–1 (Colombia) [SDNT]

PUBLIC CORPORATION FOR BUILDING AND CONSTRUCTION, P.O. Box 2110, Khartoum, Sudan [SUDAN]

PUBLIC CORPORATION FOR IRRIGATION AND EXCAVATION, P.O. Box 619, Khartoum, Sudan; P.O. Box 123, Wad Medani, Sudan [SUDAN]

PUBLIC CORPORATION FOR OIL PRODUCTS AND PIPELINES, Khartoum, Sudan [SUDAN]
PUBLIC ELECTRICITY AND WATER CORPORATION (a.k.a. CENTRAL ELECTRICITY AND WATER CORPORATION), P.O. Box 1380, Khartoum, Sudan [SUDAN]
PUENTE GONZALEZ, Carlos Alberto, c/o CORPORACION DEPORTIVA AMERICA, Cali, Colombia; DOB 28 Nov 1937; Cedula No. 2449885 (Colombia); Passport 2449885 (Colombia) (individual) [SDNT]
PUERTA PARRA, Gabriel (a.k.a. ''DOCTOR PUERTA''), c/o LA FRONTERA UNION GALVEZ Y CIA S EN C, Bogota, Colombia; c/o INTERCONTINENTAL DE AVIACION, S.A.; c/o COMERCIALIZADORA ANDINA BRASILERA S.A., Bogota, Colombia; Carrera 30 No. 90–82, Bogota, Colombia; c/o INDUSTRIAL MINERA Y PECUARIA S.A., Bogota, Colombia; DOB 1 Oct 1942; POB San Carlos, Antioquia, Colombia; Cedula No. 8238830 (Colombia); Passport P020046 (Colombia) (individual) [SDNT]
PUERTO, Luis Alfredo, c/o CODISA, Bogota, Colombia; c/o ADMACOOP, Bogota, Colombia; DOB 17 Dec 1955; Cedula No. 79113154 (Colombia); Passport 79113154 (Colombia) (individual) [SDNT]
PULIDO VALDIVIA, Javier (a.k.a. PULIDO VALDIVIA, Francisco), Mexico; Calle Fray Junipero Serra #1932, Colonia Jardines Alcalde, Guadalajara, Jalisco, Mexico; c/o LABORATORIOS WILLMAR, S.A. DE C.V., Guadalajara, Jalisco, Mexico; DOB 14 Jan 1953; citizen Mexico; nationality Mexico; C.U.R.P. PUVJ530114HJCLLV06 (Mexico) (individual) [SDNTK]
PUMA SECURITY COMPANY (a.k.a. PUMA SECURITY AGENCY; a.k.a. PUMA SECURITY SERVICE), Mostar, Bosnia and Herzegovina; Siroki Brijeg, Bosnia and Herzegovina; Capljina, Bosnia and Herzegovina; Stolac, Bosnia and Herzegovina [BALKANS]
PYZA E.U., Avenida 3 No. 21–50, Cali, Colombia; NIT # 805015054–3 (Colombia) [SDNT]
QANNADI, Mohammad (a.k.a. GHANNADI MARAGHEH, Mohammad; a.k.a. GHANNADI, Mohammad; a.k.a. QANNADI MARAGHEH, Mohammad), c/o ATOMIC ENERGY ORGANIZATION OF IRAN, Iran; DOB 13 Oct 1952; POB Maragheh, Iran; citizen Iran; nationality Iran; Passport 20694 (Iran); alt. Passport A0003044 (Iran) (individual) [NPWMD]
QASEM, Talat Fouad; DOB 02 Jun 1957; alt. DOB 03 Jun 1957; POB Al Mina, Egypt; Propaganda Leader of ISLAMIC GAMA'AT (individual) [SDT]
QUIAZUA ESPINEL, Maria Teresa, c/o REPRESENTACIONES Y DISTRIBUCIONES HUERTAS Y ASOCIADOS S.A., Bogota, Colombia; c/o CAJA SOLIDARIA, Bogota, Colombia; c/o CREDISOL, Bogota, Colombia; DOB 14 Oct 1966; Cedula No. 51837790 (Colombia); Passport 51837790 (Colombia) (individual) [SDNT]
QUIGUA ARIAS, Omar, c/o IMCOMER LTDA., Cali, Colombia; c/o INCOES LTDA., Cali, Colombia; DOB 26 Mar 1949; Cedula No. 6208489 (Colombia) (individual) [SDNT]
QUIMINTER GMBH, Vienna, Austria [CUBA]
QUINONES MELO Y CIA. LTDA., Carrera 3 No. 11–55 ofc. 206, Cali, Colombia; NIT # 890327616–0 (Colombia) [SDNT]
QUINONES, Benedicto (a.k.a. QUINONEZ, Benedicto), Calle 12A No. 107–25 No. 2, Cali, Colombia; c/o COMERCIALIZADORA CGQ LTDA., Cali, Colombia; c/o QUINONES MELO Y CIA. LTDA., Cali, Colombia; c/o ARTURO QUINONEZ LTDA., Cali, Colombia; DOB 25 Jun 1946; POB Cali, Colombia; Cedula No. 14934266 (Colombia); Passport 14934266 (Colombia) (individual) [SDNT]
QUINONEZ TORRES, Sergio Plinio, c/o ADMINISTRADORA DE SERVICIOS VARIOS CALIMA S.A., Cali, Colombia; c/o CHAMARTIN S.A., Cali, Colombia; Cedula No. 16723852 (Colombia); Passport 16723852 (Colombia) (individual) [SDNT]
QUINTA REAL JARDIN SOCIAL Y DE EVENTOS, S.A. DE C.V., Avenida Via Rapida Oriente 10950, Zona Rio Tijuana, Tijuana, Baja California, Mexico; R.F.C. QRJ–020528-BQ7 (Mexico) [SDNTK]
QUINTANA FUERTES, Andres Fernando, c/o TARRITOS S.A., Cali, Colombia; c/o INVERSIONES BRASILAR S.A., Bogota, Colombia; c/o AGROPECUARIA LINDARAJA S.A., Cali, Colombia; DOB 03 Jul 1966; POB Candelaria, Valle, Colombia; citizen Colombia; nationality Colombia; Cedula No. 16989000 (Colombia); Passport AI375038 (Colombia); alt. Passport 16989000 (Colombia) expires 13 Dec 2000 (individual) [SDNT]
QUINTANA HERNANDEZ, Gonzalo, c/o POLIEMPAQUES LTDA., Bogota, Colombia; c/o DISTRIBUIDORA DE DROGAS LA REBAJA BOGOTA S.A., Bogota, Colombia; c/o ALERO S.A., Cali, Colombia; c/o GRACADAL S.A., Cali, Colombia; Cedula No. 16603939 (Colombia) (individual) [SDNT]
QUINTANA ZORROZUA, Asier; DOB 27 Feb 1968; POB Bilbao Vizcaya Province, Spain; D.N.I. 30.609.430; Member ETA (individual) [SDGT]
QUINTERO ARCE, Juan Francisco (a.k.a. ''EL CHATO''), Mexico; DOB 26 Aug 1959; POB Mocorito, Sinaloa, Mexico; citizen Mexico; nationality Mexico; C.U.R.P. QUAJ590826HSLNRN02 (Mexico); R.F.C. QUAJ590826P41 (Mexico) (individual) [SDNTK]
QUINTERO HERNANDEZ, Miguel Angel, c/o M Q CONSULTORES, S.A. DE C.V., Tijuana, Baja California, Mexico; Calle Ventisca 2359 Secc. Dorado, Colonia Playas de Tijuana, Tijuana, Baja California, Mexico; DOB 22 Oct 1970; POB Guadalajara, Jalisco, Mexico; R.F.C. QUHM–701022-TL3 (Mexico) (individual) [SDNTK]
QUINTERO MARIN, Lucio, c/o INDUSTRIAS AGROPECUARIAS EL EDEN S.A., Higueronal Torti, Darien, Panama; DOB 3 Apr 1966; POB El Dovio, Valle, Colombia; Cedula No. 94191399 (Colombia); Passport 94191399 (Colombia) (individual) [SDNT]
QUINTERO MARIN, Maria Eugenia, c/o INDUSTRIAS AGROPECUARIAS EL EDEN S.A., Higueronal Torti, Darien, Panama; DOB 29 Jul 1968; POB El Dovio, Valle, Colombia; Cedula No. 66703157 (Colombia); Passport 66703157 (Colombia) (individual) [SDNT]
QUINTERO MERAZ, Jose Albino; DOB 15 Sep 1959; POB Sinaloa, Mexico (individual) [SDNTK]
QUINTERO SALAMANDO, Gabriela Elvira, c/o CONTACTEL COMUNICACIONES S.A., Cali, Colombia; c/o PROSPECTIVA E.U., Cali, Colombia; DOB 10 Sep 1963; Cedula No. 31406077 (Colombia); Passport 31406077 (Colombia) (individual) [SDNT]
QUINTERO SALAZAR, Lisimaco, c/o INMOBILIARIA U.M.V. S.A., Cali, Colombia (individual) [SDNT]
QUINTERO SANCLEMENTE, Ramon Alberto, Carrera 16 No. 3–15, Buga, Valle, Colombia; Calle 115 No. 9–50, Bogota, Colombia; DOB 30 Nov 1960; POB Cali, Colombia; alt. POB Armenia, Quindio, Colombia; citizen Colombia; Cedula No. 14881147 (Colombia); Passport AE048871 (Colombia) (individual) [SDNT]
R/E OF AUDREY FARM, Zimbabwe [ZIMBABWE]
R/E OF MLEMBWE FARM, Mlembwe, Zimbabwe [ZIMBABWE]
RABAK OIL MILL, P.O. Box 2105, Khartoum, Sudan [SUDAN]
RABITA TRUST, Room 9A, 2nd Floor, Wahdat Road, Education Town, Lahore, Pakistan; Wares Colony, Lahore, Pakistan [SDGT]
RACEVIEW ENTERPRISES, Zimbabwe [ZIMBABWE]
RADIC, Miroslav; DOB 1 Jan 1961; ICTY indictee in custody (individual) [BALKANS]
RADIC, Mlado; DOB 15 May 1952; POB Lamovita, Bosnia-Herzegovina; ICTY indictee (individual) [BALKANS]
RADIO SERVICE, S.A., Panama [CUBA]
RADIO UNIDAS FM S.A., Calle 15N No. 6N–34 piso 15, Edificio Alcazar, Cali, Colombia; Calle 19N No. 2N–29 piso 10 Sur, Cali, Colombia [SDNT]
RADKOV, Aleksandr Mikhailovich (a.k.a. RADZKOU, Aleksandr Mikhailavich); DOB 1 Jul 1951; POB Votnya, Belarus; citizen Belarus; nationality Belarus; Minister of Education (individual) [BELARUS]
RA-EES ALI; Vessel Registration Identification IMO 8203608 (vessel) [NPWMD]
RAHIM (a.k.a. IRAN RAHIM); Vessel Registration Identification IMO 9465746 (vessel) [NPWMD]
RAHIM 3 (vessel) [CUBA]
RAINBOW FACTORIES, P.O. Box 1768, Khartoum, Sudan [SUDAN]
RAJAH SOLAIMAN MOVEMENT (RSM) (a.k.a. RAJA SOLEIMAN MOVEMENT; a.k.a. RAJAH SOLAIMAN GROUP; a.k.a. RAJAH SOLAIMAN ISLAMIC MOVEMENT (RSIM); a.k.a. RAJAH SOLAIMAN REVOLUTIONARY MOVEMENT (RSRM); a.k.a. RAJAH SULAIMAN MOVEMENT; a.k.a. RAJAH SULAYMAN MOVEMENT) [SDGT]
RAJBROOK LIMITED, United Kingdom [IRAQ2]
RAJIC, Ivica; DOB 5 May 1958; POB Johovac, Bosnia-Herzegovina; ICTY indictee at large (individual) [BALKANS]
RAM ENERGY COMPANY LIMITED, Altiyadh Street 131/Almashtal Street, Block 12, House No. 87, P.O. Box 802, Khartoum, Sudan [SUDAN]
RAMAK (a.k.a. RAMAK DUTY FREE; a.k.a. RAMAK DUTY FREE SHOP LTD; a.k.a.

RAMAK DUTY FREE SHOPS—SYRIA; a.k.a. RAMAK DUTY FREE SHOPS LTD.; a.k.a. RAMAK FIRM FOR FREE TRADE ZONES), Al Rawda Street, PO Box 932, Damascus, Syria; Aleppo Duty Free, Aleppo International Airport, Aleppo, Syria; Damascus Duty Free, Damascus International Airport, Damascus, Syria; Tartous Port, Tartous, Syria; Abu Ramana Street, Rawda, Damascus, Syria; Bab el Hawa Border Center, Aleppo, Syria; Free Zone Area, Jamarek, PO Box 932, Damascus, Syria; Jdaideh Duty Free Complex, Jdaideh Yaboos, Damascus, Syria; Dara'a Duty Free, Naseeb Border Center, Dara'a, Syria; Lattakia Port, Lattakia, Syria; E-mail Address dam.d.free@net.sy (Syria); Website www.ramakdutyfree.net (Syria) [SYRIA]

RAMAL S.A., Diagonal 127A No. 17–34 Piso 5, Bogota, Colombia; NIT # 800142109–5 (Colombia) [SDNT]

RAMCHARAN BROTHERS LTD, Rosehall Main Road, Rosehall, Jamaica [SDNTK]

RAMCHARAN LTD, Rosehall Main Road, Rosehall, Jamaica [SDNTK]

RAMCHARAN, Leebert (a.k.a. MARSHALL, Donovan; a.k.a. RAMCHARAM, Leebert; a.k.a. RAMCHARAN, Liebert); DOB 28 Dec 1959; POB Jamaica (individual) [SDNTK]

RAMIREZ ABADIA Y CIA. S.C.S., Avenida Estacion No. 5BN–73 of. 207, Cali, Colombia; NIT # 800117676–4 (Colombia) [SDNT]

RAMIREZ ABADIA, Juan Carlos, c/o DISDROGAS LTDA., Yumbo, Valle, Colombia; c/o RAMIREZ ABADIA Y CIA. S.C.S., Cali, Colombia; Calle 6A No. 34–65, Cali, Colombia; DOB 16 Feb 1963; Cedula No. 16684736 (Colombia); Passport AD127327 (Colombia) (individual) [SDNT]

RAMIREZ AGUIRRE, Sergio Humberto, c/o Administradora De Inmuebles Vida, S.A. de C.V., Tijuana, Baja California, Mexico; c/o Farmacia Vida Suprema, S.A. DE C.V., Tijuana, Baja California, Mexico; c/o Distribuidora Imperial De Baja California, S.A. de C.V., Tijuana, Baja California, Mexico; DOB 22 Nov 1951 (individual) [SDNTK]

RAMIREZ AZA, Hernan, c/o IMPORT MAPRI LTDA., Bogota, Colombia; Cedula No. 17083264 (Colombia); Passport 17083264 (Colombia) (individual) [SDNT]

RAMIREZ AZA, Jose Manuel, c/o IMPORT MAPRI LTDA., Bogota, Colombia; c/o WORLD TRADE LTDA., Ibague, Colombia; DOB 14 Aug 1939; Cedula No. 2889531 (Colombia); Passport 2889531 (Colombia) (individual) [SDNT]

RAMIREZ BUITRAGO, Luis Eduardo, c/o INCOES LTDA., Cali, Colombia (individual) [SDNT]

RAMIREZ BUITRAGO, Placido, c/o COMERCIALIZADORA INTERNACIONAL VALLE DE ORO S.A., Cali, Colombia; DOB 16 Nov 1950; Cedula No. 10219387 (Colombia) (individual) [SDNT]

RAMIREZ CORTES, Delia Nhora (a.k.a. RAMIREZ CORTES, Delia Nora), c/o INMOBILIARIA BOLIVAR LTDA., Cali, Colombia; c/o SOCOVALLE LTDA., Cali, Colombia; c/o COMPANIA ADMINISTRADORA DE VIVIENDA S.A., Cali, Colombia; c/o AGROPECUARIA Y REFORESTADORA HERREBE LTDA., Cali, Colombia; c/o INVERSIONES HERREBE LTDA., Cali, Colombia; c/o VIAJES MERCURIO LTDA., Cali, Colombia; c/o INVERSIONES GEMINIS S.A., Cali, Colombia; c/o CONSTRUEXITO S.A., Cali, Colombia; c/o INDUSTRIA AVICOLA PALMASECA S.A., Cali, Colombia; c/o ADMINISTRACION INMOBILIARIA BOLIVAR S.A., Cali, Colombia; c/o INVERSIONES INVERVALLE S.A., Cali, Colombia; c/o CONSTRUCTORA ALTOS DEL RETIRO LTDA., Bogota, Colombia; DOB 20 Jan 1959; Cedula No. 38943729 (Colombia) (individual) [SDNT]

RAMIREZ DE CASTANEDA, Maria (a.k.a. RAMIREZ RAMIREZ, Maria), c/o DECAFARMA S.A., Bogota, Colombia; c/o PENTACOOP LTDA., Bogota, Colombia; c/o PENTA PHARMA DE COLOMBIA S.A., Bogota, Colombia; DOB 8 Dec 1943; Cedula No. 31226330 (Colombia) (individual) [SDNT]

RAMIREZ DE RAMOS, Amparo, c/o INVERSIETE S.A., Cali, Colombia; c/o INVERSIONES Y CONSTRUCCIONES ATLAS LTDA., Cali, Colombia; DOB 1 Feb 1947; Cedula No. 38997548 (Colombia) (individual) [SDNT]

RAMIREZ ESCUDERO, Pedro Emilio, c/o GALAPAGOS S.A., Cali, Colombia; Calle 6A No. 48–36, Cali, Colombia; Cedula No. 16820602 (Colombia) (individual) [SDNT]

RAMIREZ GACHA, Ivan, c/o MATERIAS PRIMAS Y SUMINISTROS S.A., Bogota, Colombia; DOB 30 Sep 1963; Cedula No. 79310808 (Colombia); Passport 79310808 (Colombia) (individual) [SDNT]

RAMIREZ GARCIA, Hernan Felipe, Calle 7 No. 51–37, Cali, Colombia; c/o CONSULTORIAS FINANCIERAS S.A., Cali, Colombia; DOB 09 Jun 1969; POB Cali, Colombia; Cedula No. 16772586 (Colombia); Passport AI848476 (Colombia) (individual) [SDNT]

RAMIREZ LENIS, Jhon Jairo, Carrera 4C No. 34–27, Cali, Colombia; DOB 19 Jul 1966; Cedula No. 79395056 (Colombia) (individual) [SDNT]

RAMIREZ M., Oscar, c/o INVERSIONES ARA LTDA., Cali, Colombia; c/o RIONAP COMERCIO Y REPRESENTACIONES S.A., Quito, Ecuador; c/o VALORES MOBILIARIOS DE OCCIDENTE S.A., Bogota, Colombia (individual) [SDNT]

RAMIREZ NUNEZ, James Alberto, Carrera 5 No. 24–63, Cali, Colombia; c/o INVERSIONES Y CONSTRUCCIONES COSMOVALLE LTDA., Cali, Colombia; c/o ANDINA DE CONSTRUCCIONES S.A., Cali, Colombia; c/o GRACADAL S.A., Cali, Colombia; c/o DISMERCOOP, Cali, Colombia; c/o SERVICIOS FARMACEUTICOS SERVIFAR S.A., Cali, Colombia; c/o INVERSIONES MONDRAGON Y CIA. S.C.S., Cali, Colombia; c/o INTERAMERICA DE CONSTRUCCIONES S.A., Cali, Colombia; DOB 21 Apr 1962; Cedula No. 16691796 (Colombia) (individual) [SDNT]

RAMIREZ PONCE, Omar, c/o RAMIREZ ABADIA Y CIA. S.C.S., Cali, Colombia; c/o DISDROGAS LTDA., Yumbo, Valle, Colombia; Carrera 38 No. 13–138, Cali, Colombia; DOB 01 Jan 1940; POB Cali, Colombia; Cedula No. 6064636 (Colombia); Passport 6064636 (Colombia) (individual) [SDNT]

RAMIREZ RIVERA, Gustavo, Calle 25 N No. 5BN–16, Cali, Colombia; Avenida 4 Oeste No. 6–103, Cali, Colombia; c/o UNIDAD CARDIOVASCULAR LTDA., Cali, Colombia; DOB 05 Apr 1968; POB Medellin, Colombia; Cedula No. 16281514 (Colombia); Passport AJ077853 (Colombia) (individual) [SDNT]

RAMIREZ RIVERA, Sergio Alberto, Cali, Colombia; DOB 14 Jan 1964; POB Cali, Colombia; Cedula No. 16694220 (Colombia); Passport AF771317 (Colombia) (individual) [SDNT]

RAMIREZ SANCHEZ, Alben, c/o INCOES LTDA., Cali, Colombia (individual) [SDNT]

RAMIREZ SUAREZ, Luis Carlos (a.k.a. RAMIREZ SUARES, Luis Carlos), c/o DROGAS LA REBAJA BUCARAMANGA S.A., Bucaramanga, Colombia; c/o COPSERVIR LTDA., Bogota, Colombia; DOB 15 May 1952; Cedula No. 19164938 (Colombia) (individual) [SDNT]

RAMIREZ VALENCIANO, William, c/o CONCRETOS CALI S.A., Cali, Colombia; c/o ADMINISTRACION INMOBILIARIA BOLIVAR S.A., Cali, Colombia; c/o INVERSIONES GEMINIS S.A., Cali, Colombia; c/o IMCOMER LTDA., Cali, Colombia; c/o INVERSIONES EL PENON S.A., Cali, Colombia; c/o CONSTRUCTORA DIMISA LTDA., Cali, Colombia; c/o INVERSIONES BETANIA LTDA., Cali, Colombia; Calle 3C No. 72–64 10, Cali, Colombia; DOB 7 Feb 1964; Cedula No. 16694719 (Colombia) (individual) [SDNT]

RAMON MAGANA, Alcides (a.k.a. ALCIDES MAGANA, Ramon; a.k.a. ALCIDES MAGANE, Ramon; a.k.a. ALCIDES MAYENA, Ramon; a.k.a. ALCIDEZ MAGANA, Ramon; a.k.a. GONZALEZ QUIONES, Jorge; a.k.a. MAGANA ALCIDES, Ramon; a.k.a. MAGANA, Jorge; a.k.a. MAGNA ALCIDEDES, Ramon; a.k.a. MATA, Alcides; a.k.a. RAMON MAGANA, Alcedis; a.k.a. ROMERO, Antonio); DOB 4 Sep 1957 (individual) [SDNTK]

RAMOS BONILLA, Blanca Clemencia, c/o COSMEPOP, Bogota, Colombia; c/o LATINA DE COSMETICOS Y DISTRIBUCIONES S.A., Bogota, Colombia; c/o LABORATORIOS BLAIMAR DE COLOMBIA S.A., Bogota, Colombia; DOB 19 Mar 1959; Cedula No. 41767311 (Colombia); Passport 41767311 (Colombia) (individual) [SDNT]

RAMOS RAYO, Heriberto, c/o INVERSIONES VILLA PAZ S.A., Cali, Colombia; DOB 19 Aug 1946; Cedula No. 6186403 (Colombia) (individual) [SDNT]

RANGEL SILVA, Henry de Jesus, Caracas, Venezuela; Cedula No. V-5.764.952 (Venezuela); alt. Cedula No. 5.764.952 (Venezuela); Director, Venezuelan Directorate of Intelligence and Prevention Services (''DISIP'') (individual) [SDNTK]

RANTISI, Abdel Aziz, Gaza Strip, undetermined; DOB 23 Oct 1947; POB Yubna, Gaza (Palestinian Authority) (individual) [SDGT]

RARRBO, Ahmed Hosni (a.k.a. ''ABDALLAH O ABDULLAH''); DOB 12 Sep 1974; POB Bologhine, Algeria (individual) [SDGT]

RASEVIC, Mitar; DOB 1940; POB Cagust, Bosnia-Herzegovina; ICTY indictee (individual) [BALKANS]

RASHID, Ata Abdoulaziz (a.k.a. BARZINGY, Ata Abdoul Aziz; a.k.a. RASHID, Ata Abd Al-Aziz), Schmidener Street 98, Stuttgart 70374, Germany; Stuttgart Prison, Stuttgart, Germany; DOB 1 Dec 1973; POB Sulaymaniyah, Iraq; nationality Iraq; Travel Document Number A0020375 (Germany) (individual) [SDGT]

RATTANA VICHAI COMPANY LTD. (a.k.a. BORISAT RATTANA WICHAI CHAMKAT), 339 Soi Lat Phrao 23, Lat Phrao Road, Chatuchak district, Bangkok, Thailand [SDNTK]

RAUTENBACH, Muller (a.k.a. RAUTENBACH, Billy; a.k.a. RAUTENBACH, Muller Conrad); DOB 11 Nov 1950; alt. DOB 23 Sep 1959; citizen Zimbabwe; Passport ZE26547 (Zimbabwe) (individual) [ZIMBABWE]

RAVENS (vessel) [CUBA]

REA SWEET FACTORY, P.O. Box 1027, Khartoum, Sudan [SUDAN]

REAL IRA (a.k.a. 32 COUNTY SOVEREIGNTY COMMITTEE; a.k.a. 32 COUNTY SOVEREIGNTY MOVEMENT; a.k.a. IRISH REPUBLICAN PRISONERS WELFARE ASSOCIATION; a.k.a. REAL IRISH REPUBLICAN ARMY; a.k.a. REAL OGLAIGH NA HEIREANN; a.k.a. RIRA) [FTO] [SDGT]

RECICLAJE INDUSTRIAL, S.A., Panama [CUBA]

RECITEC LTDA., Calle 16 No. 12–49, Cali, Colombia; NIT # 800037780–9 (Colombia) [SDNT]

RED DE SERVICIOS INMOBILIARIO PROFESIONALES S.A. (f.k.a. RED DE INMOBILIARIOS PROFESIONALES S.A.; a.k.a. ''RIPSA''), Carrera 12 No. 79–32, Ofc. 703, Bogota, Colombia; NIT # 830065743–4 (Colombia) [SDNT]

RED HAND DEFENDERS (RHD), United Kingdom [SDGT]

RED SEA BARAKAT COMPANY LIMITED, Mogadishu, Somalia; Dubai, United Arab Emirates [SDGT]

RED SEA HILLS MINERALS COMPANY, C/O SUDANESE MINING CORPORATION, P.O. Box 1034, Khartoum, Sudan [SUDAN]

RED SEA STEVEDORING, P.O. Box 215, Khartoum, Sudan; P.O. Box 17, Port Sudan, Sudan [SUDAN]

REDESTOS (vessel) [CUBA]

REDESTOS SHIPPING CO. LTD., c/o EMPRESA DE NAVEGACION MAMBISA, Apartado 543, San Ignacio 104, Havana, Cuba [CUBA]

REEVES-TAYLOR, Agnes (a.k.a. REEVES-TAYLOR; a.k.a. TAYLOR, Agnes Reeves); DOB 27 Sep 1965; nationality Liberia; Ex-wife of former President of Liberia Charles Taylor; ex-Permanent Representative of Liberia to the International Maritime Organization (individual) [LIBERIA]

REFRIGERATION AND ENGINEERING IMPORT COMPANY, P.O. Box 1092, Khartoum, Sudan [SUDAN]

REINA DE TORRES, Rosalba, c/o TRIMARK LTDA., Bogota, Colombia; Cedula No. 41719184 (Colombia) (individual) [SDNT]

REINA MOLINA, Miguel Sigifredo, c/o DISTRIBUIDORA DEL VALLE E.U., Bogota, Colombia; Cedula No. 8401802 (Colombia); Passport 8401802 (Colombia) (individual) [SDNT]

REMADNA, Abdelhalim; DOB 2 Apr 1966; POB Bistra, Algeria (individual) [SDGT]

RENDON POBLETE, Rosalinda (a.k.a. RENDON DE PULIDO, Rosalinda), c/o LABORATORIOS WILLMAR, S.A. DE C.V., Guadalajara, Jalisco, Mexico; DOB 23 Nov 1953; POB Cuahutla, Morelos, Mexico; citizen Mexico; nationality Mexico (individual) [SDNTK]

RENDON RAMIREZ, Jose Aldemar (a.k.a. ''MECHAS''), Carrera 9 No. 10–07, Cartago, Valle, Colombia; Carrera 26 No. 80–40, MZ 1, Casa 13, Pereira, Risaralda, Colombia; Carrera 13 No. 18–50, Cartago, Valle, Colombia; DOB 24 Jul 1950; POB Pereira, Risaralda, Colombia; Cedula No. 16202349 (Colombia); Passport AE182792 (Colombia); alt. Passport AF956905 (Colombia) (individual) [SDNT]

RENDON RODRIGUEZ, Maria Fernanda, c/o DISMERCOOP, Cali, Colombia; Cedula No. 38864017 (Colombia) (individual) [SDNT]

RENGIFO AMAYA, Harvy Ramiro, c/o INMOBILIARIA QUILICHAO S.A., Cali, Colombia; c/o CENTRO COMERCIAL GUSS S.A., Cali, Colombia; c/o MIRACANA INMOBILIARIA QUILCHAO S.A. & CIA S.C.A., Cali, Colombia; c/o CONSTRUCTORA UMBRIA S.A., Cali, Colombia; c/o RED DE SERVICIOS INMOBILIARIO PROFESIONALES S.A., Bogota, Colombia; c/o FRONTERA VIRTUAL S.A., Bogota, Colombia; c/o VENECIA INMOBILIARIA QUILICHAO S.A. & CIA S.C.A., Cali, Colombia; DOB 02 Jan 1982; POB Colombia; citizen Colombia; nationality Colombia; Cedula No. 80201385 (Colombia); Passport AH406973 (Colombia); alt. Passport AE948092 (Colombia) (individual) [SDNT]

RENGIFO MANCERA & CIA S.C.A., Carrera 12 No. 79–32, Ofc. 703, Bogota, Colombia; NIT # 800138803–3 (Colombia) [SDNT]

RENGIFO O.A.M. Y CIA S.C.A., Carrera 12 No. 79–32, Bogota, Colombia; NIT # 900110717–9 (Colombia) [SDNT]

RENGIFO OSPINA, Edwin Amir, c/o FRONTERA VIRTUAL S.A., Bogota, Colombia; c/o MIRACANA INMOBILIARIA QUILCHAO S.A. & CIA S.C.A., Cali, Colombia; c/o CENTRO COMERCIAL GUSS S.A., Cali, Colombia; c/o AGROGANADERA LA ISABELA S.A., Cali, Colombia; c/o CONSTRUCTORA LOMA LINDA S.A., Cali, Colombia; c/o CONSTRUCCIONES LA RESERVA S.A., Cali, Colombia; c/o CONSTRUCTORA UMBRIA S.A., Cali, Colombia; c/o CONSTRUCTORA JUANAMBU S.A., Cali, Colombia; Calle 82 No. 8–43, Apt. 201, Bogota, Colombia; c/o RED DE SERVICIOS INMOBILIARIO PROFESIONALES S.A., Bogota, Colombia; DOB 20 Jun 1975; POB Bogota, Colombia; citizen Colombia; nationality Colombia; Cedula No. 79693032 (Colombia); Passport AF294763 (Colombia); alt. Passport AI054522 (Colombia) issued 16 May 2001 expires 16 May 2011 (individual) [SDNT]

RENGIFO OSPINA, Jefferson, Calle 98 No. 9–41, Apt. 1202, Bogota, Colombia; c/o FRONTERA VIRTUAL S.A., Bogota, Colombia; c/o RED DE SERVICIOS INMOBILIARIO PROFESIONALES S.A., Bogota, Colombia; c/o CENTRO COMERCIAL GUSS S.A., Cali, Colombia; c/o MIRACANA INMOBILIARIA QUILCHAO S.A. & CIA S.C.A., Cali, Colombia; DOB 19 Dec 1977; POB Cali, Colombia; citizen Colombia; nationality Colombia; Cedula No. 94511007 (Colombia); Passport PO34555 (Colombia); alt. Passport AF237758 (Colombia) (individual) [SDNT]

RENGIFO OSPINA, Lina Milayi, c/o RED DE SERVICIOS INMOBILIARIO PROFESIONALES S.A., Bogota, Colombia; c/o CONSTRUCTORA UMBRIA S.A., Cali, Colombia; c/o FRONTERA VIRTUAL S.A., Bogota, Colombia; c/o MIRACANA INMOBILIARIA QUILCHAO S.A. & CIA S.C.A., Cali, Colombia; c/o CENTRO COMERCIAL GUSS S.A., Cali, Colombia; DOB 22 Oct 1983; POB Bogota, Colombia; citizen Colombia; nationality Colombia; Cedula No. 52965678 (Colombia); Passport AI087604 (Colombia); alt. Passport AF295127 (Colombia) (individual) [SDNT]

RENGIFO PUENTES, Ramiro (a.k.a. TORRIJOS, William; a.k.a. ''LA LLAVERIA''), c/o RUIZ DE ALARCON 12 S.L., Madrid, Spain; c/o RENGIFO MANCERA & CIA S.C.A., Bogota, Colombia; Carrera 12 No. 90–19, Piso2, Bogota, Colombia; Calle 98 No. 9–41, Apt. 1102, Torre C, Bogota, Colombia; c/o RED DE SERVICIOS INMOBILIARIO PROFESIONALES S.A., Bogota, Colombia; Calle 99 No. 10–72, Bogota, Colombia; Madrid, Spain; DOB 18 Nov 1950; POB Cali; citizen Colombia; nationality Colombia; Cedula No. 19187359 (Colombia); National Foreign ID Number X3093421J (Spain); Passport AG589478 (Colombia); alt. Passport AI912220 (Colombia) issued 30 Jul 2003 expires 30 Jul 2013; alt. Passport AI206319 (Colombia) (individual) [SDNT]

RENGIFO SAAVEDRA, Carmen Hermencia, c/o COPSERVIR LTDA., Bogota, Colombia; Calle 14 No. 48A–19, Cali, Colombia; c/o COOPERATIVA DE TRABAJO ASOCIADO ACTIVAR, Bogota, Colombia; Carrera 6 No. 11–43 of. 505, Cali, Colombia; DOB 19 Dec 1969; Cedula No. 66738336 (Colombia) (individual) [SDNT]

RENGIFO VALVERDE, Fabian Francisco, c/o WORLD LINE SYSTEM S.A., Palmira, Valle, Colombia; c/o NEGOCIOS Y CAPITALES S.A., Pereira, Colombia; c/o CECEP EDITORES S.A., Cali, Colombia; c/o CECEP S.A., Cali, Colombia; c/o APVA S.A., Cali, Colombia; c/o RFA CONSULTORES Y AUDITORES LTDA., Cali, Colombia; Cali, Colombia; DOB 18 Oct 1963; Cedula No. 16690994 (Colombia) (individual) [SDNT]

RENT-A-CAR, S.A., Panama [CUBA]

RENTAR INMOBILIARIA S.A., Calle 10 No. 4–47 piso 18, Cali, Colombia; NIT # 805012015–2 (Colombia) [SDNT]

RENTERIA CAICEDO, Beatriz Eugenia, c/o CANADUZ S.A., Cali, Colombia; c/o INVERSIONES AGROINDUSTRIALES DEL OCCIDENTE LTDA., Bogota, Colombia; 18801 Collins Avenue, Apt. 322–3, Sunny Isles Beach, FL 33160; Diagonal 130 No. 7–20, Apt. 806, Bogota, Colombia; Calle 90 No. 10–05, Bogota, Colombia; 85 Brainerd Road, Townhouse 9, Allston, MA 02134; Avenida 11 No. 7N–166, Cali, Colombia; c/o COMPANIA AGROPECUARIA DEL SUR LTDA., Bogota, Colombia; DOB 30 Nov 1977; citizen Colombia; nationality

Colombia; Cedula No. 52424737 (Colombia); Passport AE309750 (Colombia); alt. Passport AG034865 (Colombia); SSN 594–33–3351 (United States) (individual) [SDNT]

RENTERIA CAICEDO, Maria Cecilia, Diagonal 130 No. 7–20, Apt. 806, Bogota, Colombia; 85 Brainerd Road, Townhouse 9, Allston, MA 02134; Avenida 11 No. 7N–166, Cali, Colombia; c/o CANADUZ S.A., Cali, Colombia; 18801 Collins Avenue, Apt. 322–3, Sunny Isles Beach, FL 33160; Calle 90 No. 10–05, Bogota, Colombia; c/o INVERSIONES AGROINDUSTRIALES DEL OCCIDENTE LTDA., Bogota, Colombia; c/o COMPANIA AGROPECUARIA DEL SUR LTDA., Bogota, Colombia; DOB 27 May 1981; POB Cali, Colombia; citizen Colombia; nationality Colombia; Cedula No. 52410645 (Colombia); Passport AD454168 (Colombia); alt. Passport AF624588 (Colombia) (individual) [SDNT]

RENTERIA MANTILLA, Carlos Alberto (a.k.a. ''BETO RENTERIA''), c/o COMPANIA AGROPECUARIA DEL SUR LTDA., Bogota, Colombia; c/o COLOMBO ANDINA COMERCIAL COALSA LTDA., Bogota, Colombia; c/o INVERSIONES AGROINDUSTRIALES DEL OCCIDENTE LTDA., Bogota, Colombia; Carrera 26 No. 29–75, Tulua, Colombia; c/o DIMABE LTDA., Bogota, Colombia; DOB 11 Mar 1945; POB Colombia; citizen Colombia; Cedula No. 6494208 (Colombia) (individual) [SDNT]

REPARACIONES Y CONSTRUCCIONES LTDA. (a.k.a. RECONSTRUYE LTDA.), Avenida 6N No. 23DN–16 of. 402, Cali, Colombia; NIT # 800053838–4 (Colombia) [SDNT]

REPRESENTACIONES ORIENTE S.R.L., Urb. La Arboleda, Mz. F Int. 10, Trujillo, Peru; RUC # 20275164675 (Peru) [SDNTK]

REPRESENTACIONES Y DISTRIBUCIONES HUERTAS Y ASOCIADOS S.A. (a.k.a. REPRESENTACIONES Y DISTRIBUCIONES HUERTAS Y ASOCIADOS LTDA.; a.k.a. TELEFARMA), Calle 124 No. 6–60, Bogota, Colombia; Avenida 42 No. 20–47, Bogota, Colombia; NIT # 860527387–8 (Colombia) [SDNT]

REPRESENTACIONES ZATZA LTDA., Calle 11 No. 16–23, Cali, Colombia; NIT # 805011682–0 (Colombia) [SDNT]

RESTREPO CANO, Maria Del Pilar, c/o COPSERVIR LTDA., Bogota, Colombia; c/o DISTRIBUIDORA SANAR DE COLOMBIA S.A., Cali, Colombia; c/o CHAMARTIN S.A., Cali, Colombia; DOB 26 Jun 1965; Cedula No. 31948671 (Colombia); Passport 31948671 (Colombia) (individual) [SDNT]

RESTREPO CLAVIJO, Carlos Umberto (a.k.a. RESTREPO CLAVIJO, Carlos Huberto; a.k.a. RESTREPO CLAVIJO, Carlos Humberto), Calle 8 No. 4–47, Cartago, Valle, Colombia; Cedula No. 16205322 (Colombia) (individual) [SDNT]

RESTREPO ENCIZO, Luz Piedad, c/o MOTEL MOMENTOS E.U., Cartago, Valle, Colombia; c/o GRANJA PORCICOLA LA FORTALEZA, Cartago, Valle, Colombia; Calle 17 Bis. 2N–74, Cartago, Valle, Colombia; DOB 27 Dec 1975; POB Sevilla, Valle, Colombia; Cedula No. 31423447 (Colombia); Passport AH411251 (Colombia) (individual) [SDNT]

RESTREPO HERNANDEZ, Ruben Dario, c/o RIONAP COMERCIO Y REPRESENTACIONES S.A., Quito, Ecuador; c/o DISMERCOOP, Cali, Colombia; c/o LATINFAMRACOS, S.A., Quito, Ecuador; DOB 28 Sep 1958; Cedula No. 10094108 (Colombia); Passport 10094108 (Colombia); RUC # 1791818652001 (Ecuador) (individual) [SDNT]

RESTREPO VICTORIA, Eduardo (a.k.a. ''EL SOCIO''), c/o AGROPECUARIA PALMA DEL RIO S.A., Ibague, Colombia; c/o RR TOUR, S.A. DE C.V., Guadalajara, Mexico; Calle 6 No. 3–73, Ibague, Tolima, Colombia; DOB 28 Sep 1958; POB Pital, Huila, Colombia; citizen Colombia; nationality Colombia; Cedula No. 12187343 (Colombia); Passport AG989562 (Colombia); alt. Passport AE678681 (Colombia) (individual) [SDNT]

RESTREPO VICTORIA, Maria Teresa, Carrera 17 No. 91–42, Apt. 502, Bogota, Colombia; c/o AGROPECUARIA PALMA DEL RIO S.A., Ibague, Colombia; DOB 04 Dec 1949; POB Garzon, Huila, Colombia; Cedula No. 41477630 (Colombia) (individual) [SDNT]

RESTREPO VICTORIA, Norma Constanza, Carrera 22 No. 86A–60, Apt. 202, Bogota, Colombia; c/o AGROPECUARIA PALMA DEL RIO S.A., Ibague, Colombia; DOB 05 Jan 1968; POB Pital, Huila, Colombia; Cedula No. 55060642 (Colombia); Passport AF535472 (Colombia); alt. Passport AG010495 (Colombia) (individual) [SDNT]

RESTREPO VILLEGAS, Camilio, c/o PLASTICOS CONDOR LTDA., Cali, Colombia; Calle 116 No. 12–49, Bogota, Colombia; c/o FLEXOEMPAQUES LTDA., Cali, Colombia; DOB 27 Dec 1938; Cedula No. 6051150 (Colombia) (individual) [SDNT]

REVISTA DEL AMERICA LTDA., Calle 23AN No. 5AN–19, Cali, Colombia [SDNT]

REVIVAL OF ISLAMIC HERITAGE SOCIETY (a.k.a. ADMINISTRATION OF THE REVIVAL OF ISLAMIC HERITAGE SOCIETY COMMITTEE; a.k.a. CCFW; a.k.a. CENTER OF CALL FOR WISDOM; a.k.a. COMMITTEE FOR EUROPE AND THE AMERICAS; a.k.a. DORA E MIRESISE; a.k.a. GENERAL KUWAIT COMMITTEE; a.k.a. HAND OF MERCY; a.k.a. IHRS; a.k.a. IHYA TURAS AL-ISLAMI; a.k.a. IJHA TURATH AL-ISLAMI; a.k.a. ISLAMIC HERITAGE RESTORATION SOCIETY; a.k.a. ISLAMIC HERITAGE REVIVAL PARTY; a.k.a. JAMA'AH IHYA AL-TURAZ AL-ISLAMI; a.k.a. JAMIA IHYA UL TURATH; a.k.a. JAMI'AH AL-HIYA AL-TURATH AL ISLAMIYAH; a.k.a. JAMIAT IHIA AL-TURATH AL-ISLAMIYA; a.k.a. JAMI'AT IHY'A AL-TIRATH AL-ISLAMIA; a.k.a. JAMIATUL IHYA UL TURATH; a.k.a. JAMIATUL-YAHYA UT TURAZ; a.k.a. JAM'IYAT IHYA' AL-TURATH AL-ISLAMI; a.k.a. JAMIYAT IKHYA AT-TURAZ AL-ISLAMI, SOCIETY OF THE REBIRTH OF THE ISLAMIC PEOPLE; a.k.a. JOMIATUL EHYA-UT TURAJ; a.k.a. JOMIYATU-EHYA-UT TURAS AL ISLAMI; a.k.a. KJRC-BOSNIA AND HERZEGOVINA; a.k.a. KUWAIT GENERAL COMMITTEE FOR AID; a.k.a. KUWAITI HERITAGE; a.k.a. KUWAITI JOINT RELIEF COMMITTEE, BOSNIA AND HERZEGOVINA; a.k.a. LAJNAT AL-IHYA AL-TURATH AL-ISLAMI; a.k.a. LAJNAT IHYA AL-TURATH AL-ISLAMI; a.k.a. NARA WELFARE AND EDUCATION ASSOCIATION; a.k.a. NGO TURATH; a.k.a. ORGANIZACIJA PREPORODA ISLAMSKE TRADICIJE KUVAJT; a.k.a. PLANDISTE SCHOOL, BOSNIA AND HERZEGOVINA; a.k.a. REVIVAL OF ISLAMIC HERITAGE FOUNDATION; a.k.a. REVIVAL OF ISLAMIC SOCIETY HERITAGE ON THE AFRICAN CONTINENT; a.k.a. RIHF; a.k.a. RIHS; a.k.a. RIHS ADMINISTRATION FOR THE BUILDING OF MOSQUES AND ISLAMIC PROJECTS; a.k.a. RIHS ADMINISTRATION FOR THE COMMITTEES OF ALMSGIVING; a.k.a. RIHS AFRICAN CONTINENT COMMITTEE; a.k.a. RIHS ARAB WORLD COMMITTEE; a.k.a. RIHS AUDIO RECORDINGS COMMITTEE; a.k.a. RIHS CAMBODIA-KUWAIT ORPHANAGE CENTER; a.k.a. RIHS CENTER FOR MANUSCRIPTS COMMITTEE; a.k.a. RIHS CENTRAL ASIA COMMITTEE; a.k.a. RIHS CHAOM CHAU CENTER; a.k.a. RIHS COMMITTEE FOR AFRICA; a.k.a. RIHS COMMITTEE FOR ALMSGIVING AND CHARITIES; a.k.a. RIHS COMMITTEE FOR INDIA; a.k.a. RIHS COMMITTEE FOR SOUTH EAST ASIA; a.k.a. RIHS COMMITTEE FOR THE ARAB WORLD; a.k.a. RIHS COMMITTEE FOR THE CALL AND GUIDANCE; a.k.a. RIHS COMMITTEE FOR WEST ASIA; a.k.a. RIHS COMMITTEE FOR WOMEN; a.k.a. RIHS COMMITTEE FOR WOMEN, ADMINISTRATION FOR THE BUILDING OF MOSQUES; a.k.a. RIHS CULTURAL COMMITTEE; a.k.a. RIHS EDUCATING COMMITTEES, AL-JAHRA'; a.k.a. RIHS EUROPE AMERICA MUSLIMS COMMITTEE; a.k.a. RIHS EUROPE AND THE AMERICAS COMMITTEE; a.k.a. RIHS FATWAS COMMITTEE; a.k.a. RIHS GENERAL COMMITTEE FOR DONATIONS; a.k.a. RIHS HEADQUARTERS-KUWAIT; a.k.a. RIHS INDIAN CONTINENT COMMITTEE; a.k.a. RIHS INDIAN SUBCONTINENT COMMITTEE; a.k.a. RIHS MOSQUES COMMITTEE; a.k.a. RIHS OFFICE OF PRINTING AND PUBLISHING; a.k.a. RIHS PRINCIPLE COMMITTEE FOR THE CENTER FOR PRESERVATION OF THE HOLY QU'ARAN; a.k.a. RIHS PROJECT OF ASSIGNING PREACHERS COMMITTEE; a.k.a. RIHS PUBLIC RELATIONS COMMITTEE; a.k.a. RIHS SCIENTIFIC COMMITTEE-BRANCH OF SABAH AL-NASIR; a.k.a. RIHS SOUTHEAST ASIA COMMITTEE; a.k.a. RIHS TWO AMERICAS AND EUROPEAN MUSLIM COMMITTEE; a.k.a. RIHS WOMEN'S BRANCH FOR THE PROJECT OF ENDOWMENT; a.k.a. RIHS YOUTH CENTER COMMITTEE; a.k.a. RIHS-ALBANIA; a.k.a. RIHS-AZERBAIJAN; a.k.a. RIHS-BANGLADESH; a.k.a. RIHS-BENIN; a.k.a. RIHS-BOSNIA AND HERZEGOVINA; a.k.a. RIHS-CAMBODIA; a.k.a. RIHS-CAMEROON; a.k.a. RIHS-GHANA; a.k.a. RIHS-IVORY COAST; a.k.a. RIHS-KOSOVO; a.k.a. RIHS-LEBANON; a.k.a. RIHS-LIBERIA; a.k.a. RIHS-NIGERIA; a.k.a. RIHS-RUSSIA; a.k.a. RIHS-SENEGAL;

a.k.a. RIHS-SOMALIA; a.k.a. RIHS-TANZANIA; a.k.a. SOCIETY FOR THE REVIVAL OF ISLAMIC HERITAGE; a.k.a. THE KUWAIT-CAMBODIA ISLAMIC CULTURAL TRAINING CENTER; a.k.a. THE KUWAITI-CAMBODIAN ORPHANAGE CENTER; a.k.a. THIRRJA PER UTESI), Number 6 Donji Hotonj Street, Sarajevo, Bosnia and Herzegovina; Al-Dhahr, Kuwait; Al-Rumaythiyah, Kuwait; Jalib Al-Shiyukh, Kuwait; Al-Firdaws, Kuwait; Al-Andalus, Kuwait; RIHS Alija House, Ilidza, Bosnia and Herzegovina; RIHS Office, Ilidza, Bosnia and Herzegovina; Al-Khalidiya, Kuwait; Al-Sabahiyah, Kuwait; Khitan, Kuwait; RIHS Office, Tirana, Albania; M.M. Baseskije Street, No. 28p, Sarajevo, Bosnia and Herzegovina; Number 2 Plandiste Street, Sarajevo, Bosnia and Herzegovina; Number 28 Mula Mustafe Baseskije Street, Sarajevo, Bosnia and Herzegovina; Kifan, Kuwait; Al-Rawdah, Kuwait; Al-Qadisiyah, Kuwait; Sabah Al-Nasir, Kuwait; Kismayo, Somalia; City of Sidon, Lebanon; Al-Salimiyah, Kuwait; Sabah Al-Salim, Kuwait; Al-Fayha', Kuwait; Hadiyah, Kuwait; Al-Jahra', Kuwait; Dangkor District, Phnom Penh, Cambodia; Tripoli, Lebanon; RIHS Office, Pristina, Kosovo; Part 5, Qurtaba, P.O. Box 5585, Safat, Kuwait; Al-Nuzhah, Kuwait; Al-Amiriyah, Kuwait; Al-Shamiyah Wa Al-Shuwaykh, Kuwait; Bayan Wa Mashrif, Kuwait; Al-Riqah, Kuwait; Kaneshi Quarter of Accra, Ghana; House #40, Lake Drive Road, Sector #7, Uttara, Dhaka, Bangladesh; Al-Aridiyah, Kuwait; Qurtubah, Kuwait; Al-Qurayn, Kuwait; Website www.alturath.org. Revival of Islamic Heritage Society Offices Worldwide. [SDGT]

REVIVAL OF ISLAMIC HERITAGE SOCIETY (RIHS) (a.k.a. JAMIA IHYA UL TURATH; a.k.a. JAMIAT IHIA AL-TURATH AL-ISLAMIYA; a.k.a. REVIVAL OF ISLAMIC SOCIETY HERITAGE ON THE AFRICAN CONTINENT), Pakistan; Afghanistan; Office in Kuwait is NOT designated [SDGT]

REVOLUTIONARY ARMED FORCES OF COLOMBIA (a.k.a. FARC; a.k.a. FUERZAS ARMADAS REVOLUCIONARIAS DE COLOMBIA) [FTO] [SDGT] [SDNTK]

REVOLUTIONARY ORGANIZATION 17 NOVEMBER (a.k.a. 17 NOVEMBER; a.k.a. EPANASTATIKI ORGANOSI 17 NOEMVRI) [FTO] [SDGT]

REVOLUTIONARY PEOPLE'S LIBERATION PARTY/FRONT (a.k.a. DEV SOL; a.k.a. DEV SOL ARMED REVOLUTIONARY UNITS; a.k.a. DEV SOL SDB; a.k.a. DEV SOL SILAHLI DEVRIMCI BIRLIKLERI; a.k.a. DEVRIMCI HALK KURTULUS PARTISI-CEPHESI; a.k.a. DEVRIMCI SOL; a.k.a. DHKP/C; a.k.a. REVOLUTIONARY LEFT) [FTO] [SDGT]

REVOLUTIONARY PEOPLE'S STRUGGLE (a.k.a. ELA; a.k.a. EPANASTATIKOS LAIKOS AGONAS; a.k.a. JUNE 78; a.k.a. LIBERATION STRUGGLE; a.k.a. ORGANIZATION OF REVOLUTIONARY INTERNATIONALIST SOLIDARITY; a.k.a. POPULAR REVOLUTIONARY STRUGGLE; a.k.a. REVOLUTIONARY CELLS; a.k.a. REVOLUTIONARY NUCLEI; a.k.a. REVOLUTIONARY POPULAR STRUGGLE) [SDGT]

REVOLUTIONARY STRUGGLE (a.k.a. EPANASTATIKOS AGHONAS), Greece [FTO]

REXHEPI, Daut; DOB 1962; POB Poroj, Macedonia (individual) [BALKANS]

REYES MONROY, Pablo, c/o CAJA SOLIDARIA, Bogota, Colombia; c/o COPSERVIR LTDA., Bogota, Colombia; c/o SEGECOL LTDA., Bucaramanga, Colombia; Cedula No. 91265116 (Colombia) (individual) [SDNT]

REYES MURCIA, Edgar, c/o CONSTRUVIDA S.A., Cali, Colombia; DOB 3 Feb 1947; Cedula No. 17181081 (Colombia) (individual) [SDNT]

REYES VERGARA, Guillermo, Panama City, Panama (individual) [CUBA]

REYNOLDS AND WILSON, LTD., 21 Victoria Road, Surbiton, Surrey KT6 4LK, United Kingdom [IRAQ2]

REZAIE, Morteza (a.k.a. REZAI, Morteza); DOB circa 1956; citizen Iran; nationality Iran (individual) [NPWMD]

RFA CONSULTORES Y AUDITORES LTDA., Avenida 6 Norte No. 23N–85, Cali, Colombia; NIT # 805025427–1 (Colombia) [SDNT]

RIBON RODRIGUEZ, Wilmen, c/o CAJA SOLIDARIA, Bogota, Colombia; c/o COPSERVIR LTDA., Bogota, Colombia; c/o LITOPHARMA, Barranquilla, Colombia; Calle 61 No. 47–22 Piso 2, Barranquilla, Colombia; Calle 61 No. 47–21, Barranquilla, Colombia; Cedula No. 91223795 (Colombia) (individual) [SDNT]

RICARDO DIAZ, Alfonso, c/o CRETA S.A., La Union, Valle, Colombia; c/o FUNDACION CENTRO FRUTICOLA ANDINO, La Union, Valle, Colombia; c/o HEBRON S.A., Tulua, Valle, Colombia; c/o CASA GRAJALES S.A., La Union, Valle, Colombia; c/o WORLD WORKING COMERCIALIZADORA INTERNACIONAL S.A., Cali, Colombia; c/o FREXCO S.A., La Union, Valle, Colombia; Calle 15 No. 10–52, La Union, Valle, Colombia; Cedula No. 14950952 (Colombia) (individual) [SDNT]

RICARDO JAAR Y CIA. S.C.S., Carrera 74 No. 76—150, Barranquilla, Atlantico, Colombia; NIT # 890114336–9 (Colombia) [SDNT]

RICHARD A. CHICHAKLI PC, 811 S. Central Expwy., Ste 210, Richardson, TX 75080; P.O. Box 850432, Richardson, TX 75085 [LIBERIA]

RICKS, Roy, 87 St. Mary's Frice, Benfleet, Essex, United Kingdom (individual) [IRAQ2]

RICUARTE FLOREZ, Gilma Leonor, c/o LABORATORIOS GENERICOS VETERINARIOS, Bogota, Colombia; DOB 20 Apr 1961; Cedula No. 51640309 (Colombia) (individual) [SDNT]

RIDGEPOINT OVERSEAS DEVELOPMENTS LIMITED (a.k.a. RIDGEPOINT OVERSEAS DEVELOPMENTS LTD), C/O: Mossack Fonseca & Co. BVI Ltd, Akara Building, 24 DeCastro St, Road Town, Tortola, Virgin Islands, British; P.O. Box 3136, Road Town, Tortola, Virgin Islands, British [ZIMBABWE]

RIFKI, Taufik (a.k.a. REFKE, Taufek; a.k.a. RIFQI, Taufik; a.k.a. RIFQI, Tawfiq; a.k.a. YACUB, Eric; a.k.a. ''ABU OBAIDA''; a.k.a. ''ABU OBAIDAH''; a.k.a. ''ABU OBAYDA''; a.k.a. ''ABU OBEIDA''; a.k.a. ''ABU UBAIDAH''; a.k.a. ''AMI IRAQ''; a.k.a. ''AMI IRZA''; a.k.a. ''AMI KUSOMAN''; a.k.a. ''AMMY ERZA''; a.k.a. ''AMMY IZZA''; a.k.a. ''AMY ERJA''; a.k.a. ''IZZA KUSOMAN''; a.k.a. ''OBAIDAH''); DOB 29 Aug 1974; alt. DOB 19 Aug 1974; alt. DOB 19 Aug 1980; alt. DOB 9 Aug 1974; POB Dacusuman Surakarta, Central Java, Indonesia; nationality Indonesia (individual) [SDGT]

RIHANI, Lotfi Ben Abdul Hamid Ben Ali (a.k.a. ''ABDERRAHMANE''), Via Bolgeri 4, Barni (Como), Italy; DOB 1 Jul 1977; POB Tunisi, Tunisia; nationality Tunisia; Passport L 886177 issued 14 Dec 1998 expires 13 Dec 2003 (individual) [SDGT]

RINCON MOLINA, Myriam, c/o CAMBIOS EL TREBOL, Bogota, Colombia; DOB 29 Jan 1959; POB Girardot, Cundinamarca, Colombia; citizen Colombia; nationality Colombia; Cedula No. 20622294 (Colombia); Passport AK739055 (Colombia) (individual) [SDNTK]

RINCONES MENDOZA, Henry Juvenal; DOB 25 Sep 1976; POB Colombia; Cedula No. 79863543 (Colombia) (individual) [SDNT]

RIONAP COMERCIO Y REPRESENTACIONES S.A., Av. 10 de Agosto y Gral. Vicente Aguirre, Edificio Freile Ardiani Local 101–103, Quito, Ecuador; Quito, Ecuador; RUC # 1791269969001 (Ecuador) [SDNT]

RIOS JIMENEZ S. EN C.S., Carrera 18 No. 38–35, Bogota, Colombia; NIT # 830007478–1 (Colombia) [SDNT]

RIOS LOZANO, Alexander, c/o MAQUINARIA TECNICA Y TIERRAS LTDA., Cali, Colombia; c/o AGROPECUARIA MIRALINDO S.A., Cartago, Colombia; Carrera 8N No. 17A–12, Cartago, Colombia; c/o ARIZONA S.A., Cartago, Colombia; Carrera 42 No. 5B–81, Cali, Colombia; DOB 15 Jan 1974; Cedula No. 94402123 (Colombia); Passport 94402123 (Colombia) (individual) [SDNT]

RIVERA LEDESMA, Ruben Manuel, c/o CHAMARTIN S.A., Cali, Colombia; c/o ADMINISTRADORA DE SERVICIOS VARIOS CALIMA S.A., Cali, Colombia; c/o ASISTENCIA PROFESIONAL ESPECIALIZADA EN COLOMBIA LIMITADA, Cali, Colombia; Cedula No. 14886120 (Colombia); Passport 14886120 (Colombia) (individual) [SDNT]

RIVERA ZAPATA, Freddy, c/o COMPANIA DE FOMENTO MERCANTIL S.A., Cali, Colombia; c/o FINVE S.A., Bogota, Colombia; c/o CREDISA S.A., Cali, Colombia; c/o UNIPAPEL S.A., Yumbo, Colombia; POB Cali, Valle, Colombia; Cedula No. 16602963 (Colombia); Passport 16602963 (Colombia) (individual) [SDNT]

RIXFORD INVESTMENT CORPORATION, Panama City, Panama; RUC # 1963801394709 (Panama) [SDNT]

RIZO MORENO, Jorge Luis, c/o CONSTRUVIDA S.A., Cali, Colombia; c/o SERVIAUTOS UNO A 1A LIMITADA, Cali, Colombia; c/o PROCESADORA DE POLLOS SUPERIOR S.A., Palmira, Colombia; c/o SERVICIOS INMOBILIARIOS LTDA., Cali, Colombia; c/o CONSTRUCTORA DIMISA LTDA., Cali, Colombia; c/o INVERSIONES EL PENON S.A., Cali, Colombia; c/o INDUSTRIA AVICOLA PALMASECA S.A.,

Cali, Colombia; c/o INTERVENTORIA, CONSULTORIA Y ESTUDIOS LIMITADA INGENIEROS ARQUITECTOS, Cali, Colombia; Transversal 11, Diagonal 23–30 apt. 304A, Cali, Colombia; c/o IMPORTADORA Y COMERCIALIZADORA LTDA., Cali, Colombia; DOB 17 May 1960; Cedula No. 16646582 (Colombia) (individual) [SDNT]

ROADS AND BRIDGES PUBLIC CORPORATION, P.O. Box 756, Khartoum, Sudan [SUDAN]

ROBLEDO CORONEL, Baldemar, Blvd. FCO I Madero Pte. No. 650, Col. Centro, Culiacan, Sinaloa, Mexico; c/o COMERCIAL JOANA, S.A. DE C.V., Guadalajara, Jalisco, Mexico; c/o COMERCIALIZADORA BRIMAR'S, S.A. DE. C.V., Culiacan, Sinaloa, Mexico; Prol. Sta. Tecla No. 51, Casa 12. Cond. Viole, Los Reyes, Coyoacan, Mexico; DOB 27 Jan 1974; POB Santiago Papasquiaro, Durango, Mexico; citizen Mexico; nationality Mexico; C.U.R.P. ROCB740127HDGBRL07 (Mexico); Passport 420005453 (Mexico); R.F.C. ROCB740127KZ0 (Mexico) (individual) [SDNTK]

ROBOW, Mukhtar (a.k.a. ALI, Mujahid Mukhtar Robow; a.k.a. ALI, Mukhtar Abdullahi; a.k.a. ALI, Shaykh Mukhtar Robo; a.k.a. RUBU, Mukhtar Ali; a.k.a. ''ABU MANSOUR''; a.k.a. ''ABU MANSUR''); DOB 1969; alt. DOB 10 Oct 1969; POB Xudur, Somalia; alt. POB Keren, Eritrea; nationality Eritrea; National ID No. 1372584 (Kenya); Passport 0310857 (Eritrea) issued 21 Aug 2006 expires 20 Aug 2008; (Following data derived from an Eritrean passport issued under the alias name of Mukhtar Abdullahi Ali: Alt. DOB: 10 October 1969; Alt. POB: Keren Eritrea; nationality: Eritrean; National ID No.: 1372584, Kenya; Passport No.: 0310857, Eritrea, Issue Date 21 August 2006, Expire Date 20 August 2008) (individual) [SDGT]

ROCHA LOPEZ, Nancy Karina (a.k.a. ROCHA CASTRO, Nancy; a.k.a. ''GUTIERREZ, Nancy R.''), c/o PATRICIA CASA DE CAMBIO, Tijuana, Baja California, Mexico; Calle Del Ebano 10850, Tijuana, Baja California C.P. 22420, Mexico; c/o OPERADORA DE CAJA Y SERVICIOS, S.A. DE C.V., Tijuana, Baja California, Mexico; DOB 28 Aug 1968; POB Sinaloa, Mexico; citizen Mexico; nationality Mexico; C.U.R.P. ROLN680828MSLCPN04 (Mexico) (individual) [SDNTK]

ROCHA MERINO, Abel Zacarias, c/o COPSERVIR LTDA., Bogota, Colombia; c/o CAJA SOLIDARIA, Bogota, Colombia; Cedula No. 8758394 (Colombia) (individual) [SDNT]

ROCHA, Antonio, Panama City, Panama (individual) [CUBA]

ROCK FISH IMPORT EXPORT E.U., Avenida Juan XXIII, San Andres, Colombia; NIT # 827000913–1 (Colombia) [SDNT]

ROCKMAN LTD. (a.k.a. ROKMAN EOOD), 9 Frederick J. Curie Street, Sofia 1113, Bulgaria [LIBERIA]

RODAS CASTANO, Luis Alberto, c/o CONSTRUCCIONES ASTRO S.A., Cali, Colombia; c/o COMERCIALIZACION Y FINANCIACION DE AUTOMOTORES S.A., Cali, Colombia; DOB 11 Sep 1959; Cedula No. 16630332 (Colombia) (individual) [SDNT]

RODRIGO VEGA, Vlaudin (a.k.a. ''CARLOS VLAUDIN''), Australia; DOB 03 Mar 1960; citizen Chile; Passport J1722726 (Chile); International FARC Commission Member for Australia (individual) [SDNTK]

RODRIGUEZ ABADIA, William, c/o INVERSIONES MIGUEL RODRIGUEZ E HIJO, Cali, Colombia; c/o ANDINA DE CONSTRUCCIONES S.A., Cali, Colombia; c/o BLANCO PHARMA S.A., Bogota, Colombia; c/o VALORES MOBILIARIOS DE OCCIDENTE S.A., Bogota, Colombia; c/o REVISTA DEL AMERICA LTDA., Cali, Colombia; c/o SEGUWRA DEL VALLE E.U., Cali, Colombia; c/o ALERO S.A., Cali, Colombia; c/o INTERAMERICA DE CONSTRUCCIONES S.A., Cali, Colombia; c/o DISTRIBUIDORA DE DROGAS CONDOR LTDA., Bogota, Colombia; c/o INVERSIONES ARA LTDA., Cali, Colombia; c/o DECAFARMA S.A., Bogota, Colombia; c/o DISTRIBUIDORA MIGIL LTDA., Cali, Colombia; c/o MUNOZ Y RODRIGUEZ Y CIA. LTDA., Cali, Colombia; c/o DERECHO INTEGRAL Y CIA. LTDA., Cali, Colombia; c/o RADIO UNIDAS FM S.A., Cali, Colombia; c/o ASPOIR DEL PACIFICO Y CIA. LTDA., Cali, Colombia; c/o RIONAP COMERCIO Y REPRESENTACIONES S.A., Quito, Ecuador; c/o ASISTENCIA PROFESIONAL ESPECIALIZADA EN COLOMBIA LIMITADA, Cali, Colombia; c/o BONOMERCAD S.A., Bogota, Colombia; c/o LABORATORIOS KRESSFOR DE COLOMBIA S.A., Bogota, Colombia; c/o PRODUCCIONES CARNAVAL DEL NORTE Y COMPANIA LIMITADA, Cali, Colombia; c/o CREDIREBAJA S.A., Cali, Colombia; c/o DEPOSITO POPULAR DE DROGAS S.A., Cali, Colombia; c/o DISTRIBUIDORA DE DROGAS LA REBAJA S.A., Bogota, Colombia; c/o LABORATORIOS BLAIMAR DE COLOMBIA S.A., Bogota, Colombia; c/o CLAUDIA PILAR RODRIGUEZ Y CIA. S.C.S., Bogota, Colombia; c/o M. RODRIGUEZ O. Y CIA. S. EN C., Cali, Colombia; c/o DROCARD S.A., Bogota, Colombia; DOB 31 Jul 1965; Cedula No. 16716259 (Colombia) (individual) [SDNT]

RODRIGUEZ ARBELAEZ, Carolina, c/o ASISTENCIA PROFESIONAL ESPECIALIZADA EN COLOMBIA LIMITADA, Cali, Colombia; c/o FUNDASER, Cali, Colombia; c/o PRODUCCIONES CARNAVAL DEL NORTE Y COMPANIA LIMITADA, Cali, Colombia; c/o INVERSIONES ARA LTDA., Cali, Colombia; c/o INVERSIONES CARFENI, S.L., Madrid, Spain; c/o CRASESORIAS E.U., Cali, Colombia; c/o DECAFARMA S.A., Bogota, Colombia; c/o BONOMERCAD S.A., Bogota, Colombia; c/o DROCARD S.A., Bogota, Colombia; c/o CREDIREBAJA S.A., Cali, Colombia; DOB 17 May 1979; Cedula No. 29117505 (Colombia) (individual) [SDNT]

RODRIGUEZ ARBELAEZ, Juan Miguel, c/o INVERSIONES ARA LTDA., Cali, Colombia; c/o INVERSIONES RODRIGUEZ ARBELAEZ Y CIA. S.C.S., Cali, Colombia; c/o INCOMMERCE S.A., Cali, Colombia; c/o CREDIREBAJA S.A., Cali, Colombia; c/o ASISTENCIA PROFESIONAL ESPECIALIZADA EN COLOMBIA LIMITADA, Cali, Colombia; c/o VALORES MOBILIARIOS DE OCCIDENTE S.A., Cali, Colombia; Avenida del Lago Calle Cocli Casa 19 Ciudad Jardin, Cali, Colombia; c/o BONOMERCAD S.A., Bogota, Colombia; c/o FUNDASER, Cali, Colombia; c/o DECAFARMA S.A., Bogota, Colombia; c/o DROCARD S.A., Bogota, Colombia; c/o M. RODRIGUEZ O. Y CIA. S.C.S., Cali, Colombia; DOB 19 Nov 1976; Cedula No. 94491335 (Colombia) (individual) [SDNT]

RODRIGUEZ ARBELAEZ, Maria Fernanda, c/o RIONAP COMERCIO Y REPRESENTACIONES S.A., Quito, Ecuador; c/o CREDIREBAJA S.A., Cali, Colombia; c/o CUSTOMER NETWORKS S.L., Madrid, Spain; c/o INVERSIONES ARA LTDA., Cali, Colombia; c/o DISTRIBUIDORA DE DROGAS LA REBAJA S.A., Bogota, Colombia; c/o PRODUCCIONES CARNAVAL DEL NORTE Y COMPANIA LIMITADA, Cali, Colombia; c/o ASISTENCIA PROFESIONAL ESPECIALIZADA EN COLOMBIA LIMITADA, Cali, Colombia; c/o BONOMERCAD S.A., Bogota, Colombia; c/o INVERSIONES ESPANOLES FEMCAR S.L., Madrid, Spain; c/o VALORES MOBILIARIOS DE OCCIDENTE S.A., Cali, Colombia; c/o FUNDASER, Cali, Colombia; c/o D'CACHE S.A., Cali, Colombia; c/o DECAFARMA S.A., Bogota, Colombia; c/o DROGAS LA REBAJA BOGOTA S.A., Bogota, Colombia; c/o INTERAMERICANA DE CONSTRUCCIONES S.A., Cali, Colombia; c/o DEPOSITO POPULAR DE DROGAS S.A., Cali, Colombia; c/o DROCARD S.A., Bogota, Colombia; DOB 28 Nov 1973; alt. DOB 28 Aug 1973; Cedula No. 66860965 (Colombia); N.I.E. X2566947-D (Spain); Passport 66860965 (Colombia); alt. Passport AC568974 (Colombia) (individual) [SDNT]

RODRIGUEZ AYALA, Jhon Jairo, c/o COOPIFARMA, Bucaramanga, Colombia; Avenida Bucaros No. 3–05 Bloq. 8 ap. 302, Bucaramanga, Colombia; DOB 29 Nov 1975; Cedula No. 91480692 (Colombia) (individual) [SDNT]

RODRIGUEZ CHACIN, Ramon Emilio, Venezuela; Cedula No. 3169119 (Venezuela); Former Minister of Interior and Justice of Venezuela (individual) [SDNTK]

RODRIGUEZ CONRADO, Elmer Martin, c/o LITOPHARMA, Barranquilla, Colombia; c/o COPSERVIR LTDA., Bogota, Colombia; Cedula No. 8773134 (Colombia) (individual) [SDNT]

RODRIGUEZ DE ROJAS, Haydee (a.k.a. RODRIGUEZ DE MUNOZ, Haydee; a.k.a. RODRIGUEZ OREJUELA, Haydee), c/o SORAYA Y HAYDEE LTDA., Cali, Colombia; c/o DISTRIBUIDORA DE DROGAS CONDOR LTDA., Bogota, Colombia; c/o CREACIONES DEPORTIVAS WILLINGTON LTDA., Cali, Colombia; c/o DISTRIBUIDORA MIGIL LTDA., Cali, Colombia; c/o CORPORACION DEPORTIVA AMERICA, Cali, Colombia; c/o RADIO UNIDAS FM S.A., Cali, Colombia; c/o BLANCO PHARMA S.A., Bogota, Colombia; c/o HAYDEE DE MUNOZ Y CIA. S. EN C., Cali, Colombia; DOB 22 Sep 1940; Cedula No. 38953333 (Colombia) (individual) [SDNT]

RODRIGUEZ LINARES, Oswaldo, c/o DROFARCO, Barranquilla, Colombia; DOB 13 Nov 1969; Cedula No. 76310365 (Colombia); Passport 76310365 (Colombia) (individual) [SDNT]

RODRIGUEZ MENDIETA, Jorge Enrique (a.k.a. ''IVAN VARGAS''); DOB 15 Jan 1963; POB Giron, Santander, Colombia; citizen Colombia; nationality Colombia; Cedula No. 91223461 (Colombia) (individual) [SDNTK]

RODRIGUEZ MONDRAGON, Humberto, c/o CODISA, Bogota, Colombia; c/o COMERCIALIZADORA INTERTEL S.A., Cali, Colombia; c/o DECAFARMA S.A., Bogota, Colombia; c/o FUNDASER, Cali, Colombia; c/o MEGAPLAST S.A., Palmira, Valle, Colombia; c/o GRACADAL S.A., Cali, Colombia; c/o ASESORIAS PROFESIONALES ESPECIALIZADAS EN NEGOCIOS E.U., Cali, Colombia; c/o LABORATORIOS KRESSFOR DE COLOMBIA S.A., Bogota, Colombia; c/o INTERAMERICA DE CONSTRUCCIONES S.A., Cali, Colombia; c/o MARIELA DE RODRIGUEZ Y CIA. S. EN C., Cali, Colombia; c/o BONOMERCAD S.A., Bogota, Colombia; c/o DROCARD S.A., Bogota, Colombia; c/o FOGENSA S.A., Bogota, Colombia; c/o MAXITIENDAS TODO EN UNO, Cali, Colombia; c/o LABORATORIOS BLAIMAR DE COLOMBIA S.A., Bogota, Colombia; c/o ADMINISTRADORA DE SERVICIOS VARIOS CALIMA S.A., Cali, Colombia; c/o COPSERVIR LTDA., Bogota, Colombia; c/o FARMACOOP, Bogota, Colombia; c/o ALERO S.A., Cali, Colombia; c/o PENTA PHARMA DE COLOMBIA S.A., Bogota, Colombia; c/o RADIO UNIDAS FM S.A., Cali, Colombia; c/o DISTRIBUIDORA DE DROGAS CONDOR LTDA., Bogota, Colombia; c/o DISTRIBUIDORA DE DROGAS LA REBAJA S.A., Bogota, Colombia; c/o ANDINA DE CONSTRUCCIONES S.A., Cali, Colombia; c/o CLAUDIA PILAR RODRIGUEZ Y CIA. S.C.S., Bogota, Colombia; c/o INDUSTRIAL DE GESTION DE NEGOCIOS E.U., Cali, Colombia; c/o RIONAP COMERCIO Y REPRESENTACIONES S.A., Quito, Ecuador; c/o DISTRIBUIDORA MIGIL LTDA., Cali, Colombia; c/o COSMEPOP, Bogota, Colombia; c/o PROSALUD Y BIENESTAR S.A., Cali, Colombia; c/o VALORES CORPORATIVOS ESPANOLES S.L., Madrid, Spain; c/o FARMATODO S.A., Bogota, Colombia; c/o CREDIREBAJA S.A., Cali, Colombia; c/o REPRESENTACIONES Y DISTRIBUCIONES HUERTAS Y ASOCIADOS S.A., Bogota, Colombia; c/o LATINFAMRACOS S.A., Quito, Ecuador; c/o BLANCO PHARMA S.A., Bogota, Colombia; c/o DEPOSITO POPULAR DE DROGAS S.A., Cali, Colombia; c/o D'CACHE S.A., Cali, Colombia; c/o INVERSIONES MONDRAGON Y CIA. S.C.S., Cali, Colombia; c/o DISTRIBUIDORA SANAR DE COLOMBIA S.A., Cali, Colombia; DOB 21 Jun 63; Cedula No. 16688683 (Colombia); Passport AD387757 (Colombia); alt. Passport 16688683 (Colombia) (individual) [SDNT]

RODRIGUEZ MONDRAGON, Jaime, c/o LABORATORIOS BLAIMAR DE COLOMBIA S.A., Bogota, Colombia; c/o DISTRIBUIDORA DE DROGAS CONDOR LTDA., Bogota, Colombia; c/o DEPOSITO POPULAR DE DROGAS S.A., Cali, Colombia; c/o INVERSIONES MONDRAGON Y CIA. S.C.S., Cali, Colombia; c/o CREDIREBAJA S.A., Cali, Colombia; c/o PROSPECTIVA EMPRESA UNIPERSONAL, Cali, Colombia; c/o FUNDASER, Cali, Colombia; c/o FLEXOEMPAQUES LTDA., Cali, Colombia; c/o MEGAPLAST S.A., Palmira, Valle, Colombia; c/o JAROMO INVERSIONES S.L., Madrid, Spain; c/o LABORATORIOS KRESSFOR DE COLOMBIA S.A., Bogota, Colombia; c/o BONOMERCAD S.A., Bogota, Colombia; c/o LATINFAMRACOS S.A., Quito, Ecuador; c/o ALERO S.A., Cali, Colombia; c/o GRACADAL S.A., Cali, Colombia; c/o DISTRIBUIDORA MIGIL LTDA., Cali, Colombia; c/o DROCARD S.A., Bogota, Colombia; c/o SERVICIOS DE LA SABANA E.U., Bogota, Colombia; c/o INVERSIONES Y CONSTRUCCIONES COSMOVALLE LTDA., Cali, Colombia; c/o PLASTICOS CONDOR LTDA., Cali, Colombia; c/o MARIELA DE RODRIGUEZ Y CIA. S. EN C., Cali, Colombia; c/o PENTA PHARMA DE COLOMBIA S.A., Bogota, Colombia; c/o FARMATODO S.A., Bogota, Colombia; c/o ASESORIAS DE INGENIERIA EMPRESA UNIPERSONAL, Cali, Colombia; c/o REPRESENTACIONES Y DISTRIBUCIONES HUERTAS Y ASOCIADOS S.A., Bogota, Colombia; c/o RIONAP COMERCIO Y REPRESENTACIONES S.A., Quito, Ecuador; c/o D'CACHE S.A., Cali, Colombia; c/o DISTRIBUIDORA DE DROGAS LA REBAJA S.A., Bogota, Colombia; c/o BLANCO PHARMA S.A., Bogota, Colombia; c/o CORPORACION DEPORTIVA AMERICA, Cali, Colombia; c/o DECAFARMA S.A., Bogota, Colombia; DOB 30 Mar 1960; Cedula No. 16637592 (Colombia); N.I.E. x2641093-A (Spain); Passport AE426347 (Colombia); alt. Passport 16637592 (Colombia) (individual) [SDNT]

RODRIGUEZ MONDRAGON, Maria Alexandra (a.k.a. RODRIGUEZ MONDRAGON, Alexandra), c/o BLANCO PHARMA S.A., Bogota, Colombia; c/o DEPOSITO POPULAR DE DROGAS S.A., Cali, Colombia; c/o D'CACHE S.A., Cali, Colombia; c/o MARIELA MONDRAGON DE R. Y CIA. S. EN C., Cali, Colombia; c/o SISTEMAS Y SERVICIOS TECNICOS EMPRESA UNIPERSONAL, Cali, Colombia; c/o PENTA PHARMA DE COLOMBIA S.A., Bogota, Colombia; c/o TOBOGON, Cali, Colombia; c/o MARIELA DE RODRIGUEZ Y CIA. S. EN C., Cali, Colombia; c/o CREDIREBAJA S.A., Cali, Colombia; c/o LABORATORIOS BLAIMAR DE COLOMBIA S.A., Bogota, Colombia; c/o GRACADAL S.A., Cali, Colombia; c/o CORPORACION DEPORTIVA AMERICA, Cali, Colombia; c/o INVERSIONES Y CONSTRUCCIONES COSMOVALLE LTDA., Cali, Colombia; c/o ALERO S.A., Cali, Colombia; c/o DISTRIBUIDORA MIGIL LTDA., Cali, Colombia; c/o DISTRIBUIDORA DE DROGAS LA REBAJA S.A., Bogota, Colombia; c/o INTERAMERICA DE CONSTRUCCIONES S.A., Cali, Colombia; c/o INVERSIONES MONDRAGON Y CIA. S.C.S., Cali, Colombia; c/o FUNDASER, Cali, Colombia; c/o DISTRIBUIDORA DE DROGAS CONDOR LTDA., Bogota, Colombia; c/o CUSTOMER NETWORKS S.L., Madrid, Spain; c/o INVERSIONES INMOBILIARIAS VALERIA S.L., Madrid, Spain; c/o DROCARD S.A., Bogota, Colombia; DOB 30 May 1969; alt. DOB 5 May 1969; Cedula No. 66810048 (Colombia); N.I.E. X2561613-B (Spain); Passport 66810048 (Colombia); alt. Passport AD359106 (Colombia) (individual) [SDNT]

RODRIGUEZ OREJUELA DE GIL, Amparo, c/o LABORATORIOS BLAIMAR DE COLOMBIA S.A., Bogota, Colombia; c/o BLANCO PHARMA S.A., Bogota, Colombia; c/o DISTRIBUIDORA MIGIL LTDA., Cali, Colombia; c/o CREACIONES DEPORTIVAS WILLINGTON LTDA., Cali, Colombia; c/o DISTRIBUIDORA DE DROGAS CONDOR LTDA., Bogota, Colombia; c/o CORPORACION DEPORTIVA AMERICA, Cali, Colombia; c/o D'CACHE S.A., Cali, Colombia; c/o DROBLAM S.A., Cali, Colombia; c/o AQUILEA S.A., Cali, Colombia; c/o DEPOSITO POPULAR DE DROGAS S.A., Cali, Colombia; c/o RADIO UNIDAS FM S.A., Cali, Colombia; c/o LABORATORIOS KRESSFOR DE COLOMBIA S.A., Bogota, Colombia; DOB 13 Mar 49; Cedula No. 31218703 (Colombia); Passport AC342062 (Colombia) (individual) [SDNT]

RODRIGUEZ OREJUELA, Gilberto Jose (a.k.a. ''LUCAS''; a.k.a. ''THE CHESS PLAYER''), Cali, Colombia; DOB 31 Jan 1939; Cedula No. 6068015 (Colombia); alt. Cedula No. 6067015 (Colombia); Passport T321642 (Colombia); alt. Passport 77588 (Argentina); alt. Passport 10545599 (Venezuela); alt. Passport 6067015 (Comoros) (individual) [SDNT]

RODRIGUEZ OREJUELA, Miguel Angel (a.k.a. ''DOCTOR M.R.O.''; a.k.a. ''EL SENOR''; a.k.a. ''MANOLO''; a.k.a. ''MANUEL''; a.k.a. ''MAURO''; a.k.a. ''MIKE''; a.k.a. ''PAT''; a.k.a. ''PATRICIA''; a.k.a. ''PATRICIO''; a.k.a. ''PATTY''), Casa No. 19, Avenida Lago, Ciudad Jardin, Cali, Colombia; DOB 23 Nov 1943; alt. DOB 15 Jul 1943; Cedula No. 6095803 (Colombia) (individual) [SDNT]

RODRIGUEZ PINZON, Manuel, c/o LABORATORIOS KRESSFOR, Bogota, Colombia; c/o ALFA PHARMA S.A., Cali, Colombia; DOB 12 Mar 1947; Cedula No. 17171485 (Colombia) (individual) [SDNT]

RODRIGUEZ RAMIREZ, Andre Gilberto, c/o DROCARD S.A., Bogota, Colombia; c/o FOGENSA S.A., Bogota, Colombia; c/o ANDINA DE CONSTRUCCIONES S.A., Cali, Colombia; c/o CAFE ANDINO S.L., Madrid, Spain; c/o BONOMERCAD S.A., Bogota, Colombia; c/o CONSULTORIA SANTAFE E.U., Bogota, Colombia; c/o INVERSIONES RODRIGUEZ RAMIREZ Y CIA. S.C.S., Cali, Colombia; c/o DISTRIBUIDORA SANAR DE COLOMBIA S.A., Cali, Colombia; c/o INVERSIONES Y CONSTRUCCIONES ABC S.A., Cali, Colombia; Calle 10 No. 4–47 piso 18, Cali, Colombia; c/o ALERO S.A., Cali, Colombia; c/o DECAFARMA S.A., Bogota, Colombia; c/o CREDIREBAJA S.A., Cali, Colombia;

DOB 22 Mar 1972; Cedula No. 16798937 (Colombia); Passport 16798937 (Colombia) (individual) [SDNT]

RODRIGUEZ RAMIREZ, Claudia Pilar, c/o DEPOSITO POPULAR DE DROGAS S.A., Cali, Colombia; c/o CREDIREBAJA S.A., Cali, Colombia; c/o INTERAMERICANA DE CONSTRUCCIONES S.A., Cali, Colombia; c/o DROCARD S.A., Bogota, Colombia; c/o INVERSIONES CLAUPI S.L., Madrid, Colombia; c/o BONOMERCAD S.A., Bogota, Colombia; c/o ALERO S.A., Cali, Colombia; c/o FARMATODO S.A., Bogota, Colombia; c/o LABORATORIOS KRESSFOR DE COLOMBIA S.A., Bogota, Colombia; c/o LABORATORIOS BLAIMAR DE COLOMBIA S.A., Bogota, Colombia; c/o DISTRIBUIDORA DE DROGAS LA REBAJA S.A., Bogota, Colombia; c/o DISTRIBUIDORA MIGIL LTDA., Cali, Colombia; c/o DIRECCION COMERCIAL Y MARKETING CONSULTORIA EMPRESA UNIPERSONAL, Bogota, Colombia; c/o DISTRIBUIDORA DE DROGAS CONDOR LTDA., Bogota, Colombia; c/o GRACADAL S.A., Cali, Colombia; c/o CLAUDIA PILAR RODRIGUEZ Y CIA. S.C.S., Bogota, Colombia; c/o D'CACHE S.A., Cali, Colombia; c/o DEFAFARMA S.A., Bogota, Colombia; DOB 30 Jun 1963; alt. DOB 1966; alt. DOB 30 Aug 1963; Cedula No. 51741013 (Colombia); Passport 51741013 (Colombia); alt. Passport 007281 (Colombia); alt. Passport P0555266 (Colombia) (individual) [SDNT]

RODRIGUEZ TELLEZ, Luz Yazmin (a.k.a. RODRIGUEZ TELLEZ, Luz Jazmin), c/o MATERIAS PRIMAS Y SUMINISTROS S.A., Bogota, Colombia; c/o LABORATORIOS PROFARMA LTDA., Bogota, Colombia; DOB 30 Apr 1972; Cedula No. 52030300 (Colombia); Passport 52030300 (Colombia) (individual) [SDNT]

RODRIGUEZ Y TOLBANOS S.A., Plaza de Espana 2, 1-C, Alcala de Henares, Madrid, Spain; Pgno. Ind. Camporrosso, C/Buenos Aires, 1 nave 15, 28806 Alcala de Henares, Madrid, Spain; C.I.F. A82467887 (Spain) [SDNT]

RODRIQUEZ BORGES, Jesus (a.k.a. RODRIQUEZ BORJES, Jesus), Panama (individual) [CUBA]

RODRIQUEZ, Jose Julio, 20 Ironmonger Lane, London EC2V 8EY, United Kingdom; Chairman, Havana International Bank (individual) [CUBA]

ROGULJIC, Slavko; DOB 1952 (individual) [BALKANS]

ROJAS BECERRA, Andres Felipe, c/o COMERCIALIZADORA INTERTEL S.A., Cali, Colombia; c/o CONTACTEL COMUNICACIONES S.A., Cali, Colombia; DOB 18 Feb 1978; Cedula No. 94520044 (Colombia); Passport 94520044 (Colombia) (individual) [SDNT]

ROJAS DE MENDOZA, Marleny, c/o COOPIFARMA, Bucaramanga, Colombia; Carrera 17 No. 17–65, Bucaramanga, Colombia; DOB 26 Jan 1956; Cedula No. 63288987 (Colombia) (individual) [SDNT]

ROJAS FRANCO, Jaime, Colombia; DOB 24 Dec 1957; POB Cartago, Valle, Colombia; citizen Colombia; nationality Colombia; Cedula No. 16210083 (Colombia) (individual) [SDNT]

ROJAS GALARZA, Carmen Amparo, Carrera 35 No. 10–130, Cali, Colombia; c/o CREDIREBAJA S.A., Cali, Colombia; Cedula No. 34511289 (Colombia) (individual) [SDNT]

ROJAS GOMEZ, Miryam Yaneth, c/o VALORCORP S.A., Bogota, Colombia; Cedula No. 23323121 (Colombia) (individual) [SDNT]

ROJAS MEJIA, Hernan, c/o OCCIDENTAL COMUNICACIONES LTDA., Cali, Colombia; c/o INVERSIONES Y CONSTRUCCIONES ABC S.A., Cali, Colombia; Calle 2A Oeste No. 24B–45 apt. 503A, Cali, Colombia; c/o COLOR 89.5 FM STEREO, Cali, Colombia; Calle 6A No. 9N–34, Cali, Colombia; c/o CONSTRUCCIONES COLOMBO-ANDINAS LTDA., Bogota, Colombia; DOB 28 Aug 1948; Cedula No. 16242661 (Colombia) (individual) [SDNT]

ROJAS MONTOYA, Maritza, c/o GRAJALES S.A., La Union, Valle, Colombia; c/o CASA GRAJALES S.A., La Union, Valle, Colombia; c/o INVERSIONES AGUILA LTDA., La Union, Valle, Colombia; c/o IBADAN LTDA., Tulua, Valle, Colombia; c/o FREXCO S.A., La Union, Valle, Colombia; Cedula No. 31838109 (Colombia) (individual) [SDNT]

ROJAS ORTIS, Rosa, c/o ALFA PHARMA S.A., Cali, Colombia; DOB 9 Nov 1941; Cedula No. 26577444 (Colombia) (individual) [SDNT]

ROJAS SALAMANCA, Myriam, c/o LEMOFAR LTDA., Bogota, Colombia; c/o LABORATORIOS KRESSFOR DE COLOMBIA S.A., Bogota, Colombia; c/o GENERICOS ESPECIALES S.A., Bogota, Colombia; DOB 3 Apr 1959; Cedula No. 35324270 (Colombia); Passport 35324270 (Colombia) (individual) [SDNT]

ROJAS VARGAS, Alberto, c/o ESPIBENA S.A., Quito, Ecuador; c/o COLFARMA PERU S.A., Lima, Peru; c/o FARFALLA INVESTMENT S.A., Panama City, Panama; Cedula No. 13922413 (Colombia) (individual) [SDNT]

ROJAS VILLARREAL, Andres Mauricio, c/o GIAMX LTDA., Bogota, Colombia; c/o WORLD TRADE LTDA., Bogota, Colombia; Cedula No. 80415760 (Colombia) (individual) [SDNT]

ROMAN DOMINGUEZ, Erika, c/o TAURA S.A., Cali, Colombia; Cedula No. 66955540 (Colombia) (individual) [SDNT]

ROMEO, Charles (a.k.a. ROMEO, Charles Henri Robert), Panama (individual) [CUBA]

ROMERO BERMUDEZ, Tomas, Carrera 13C No. 36B–100 ap. 403, Barranquilla, Colombia; c/o LITOPHARMA, Barranquilla, Colombia; c/o COPSERVIR LTDA., Bogota, Colombia; Cedula No. 72206669 (Colombia) (individual) [SDNT]

ROMERO VARELA, Carlos Ali (a.k.a. MARTINEZ, Richard), c/o SOCIEDAD DE COMERCIALIZACION INTERNACIONAL POSEIDON S.A., Sabaneta, Antioquia, Colombia; c/o LOS GNOMOS LTDA., Cali, Colombia; DOB 19 Mar 1959; alt. DOB 19 Feb 1959; Cedula No. 13447909 (Colombia); Passport B0088212 (Venezuela) (individual) [SDNTK]

ROPERO SUAREZ, Emiro del Carmen (a.k.a. ''RUBEN ZAMORA''); DOB 2 Sep 1962; POB Municipio de Nueva Granada, Norte de Santander, Colombia; citizen Colombia; nationality Colombia; Cedula No. 13461523 (Colombia) (individual) [SDNTK]

ROPERT, Miria Contreras (a.k.a. CONTRERAS, Miria), Paris, France (individual) [CUBA]

ROQUE PEREZ, Roberto, Panama (individual) [CUBA]

ROSALES DIAZ, Hector Emilio, c/o CONCRETOS CALI S.A., Cali, Colombia; c/o INVERSIONES GEMINIS S.A., Cali, Colombia; c/o INDUSTRIA AVICOLA PALMASECA S.A., Cali, Colombia; c/o CONSTRUCTORA DIMISA LTDA., Cali, Colombia; c/o COMPANIA ADMINISTRADORA DE VIVIENDA S.A., Cali, Colombia; c/o INVERSIONES EL PENON S.A., Cali, Colombia; c/o MERCAVICOLA LTDA., Cali, Colombia; c/o INVERSIONES VILLA PAZ S.A., Cali, Colombia; c/o ADMINISTRACION INMOBILIARIA BOLIVAR S.A., Cali, Colombia; DOB 1 Apr 1955; Cedula No. 16588924 (Colombia) (individual) [SDNT]

ROSARIO NIEBLA CARDOZA A. EN P. (a.k.a. GASOLINERA ROSARIO), Avenida Manuel Vallarta 2141, Colonia Centro, Culiacan, Sinaloa 80129, Mexico; R.F.C. NICR–461006-T36 (Mexico) [SDNTK]

ROSE ISLANDS (vessel) [CUBA]

ROSERO ANGULO, German, c/o LA HOLANDA S.A., Cali, Colombia; Calle 40 No. 27–59, Cali, Colombia; Mexico; DOB 07 Oct 1964; POB Ipiales, Narino, Colombia; Cedula No. 16708846 (Colombia); Passport AF832289 (Colombia) (individual) [SDNT]

ROUINE, Lazher Ben Khalifa Ben Ahmed (a.k.a. ROUINE, Al-Azhar Ben Khalifa Ben Ahmed; a.k.a. ''LAZHAR''; a.k.a. ''SALMANE''), Vicolo San Giovanni, Rimini, Italy; DOB 20 Nov 1975; POB Sfax, Tunisia; nationality Tunisia; Passport P 182583 issued 13 Sep 2003 expires 12 Sep 2007; arrested 30 Sep 2002 (individual) [SDGT]

ROYAL KUMUDRA HOTEL, No. 9 Hotel Zone, Nay Pyi Taw, Burma; No. 1 Ywama Curve, Ba Yint Naung Road, Block (2), Hlaing Township, Rangoon, Burma [JADE] [BURMA]

ROZO CLAVIJO, Miguel Antonio, c/o CONSTRUCTORA ALTOS DEL RETIRO LTDA., Bogota, Colombia; DOB 18 Aug 1943; Cedula No. 17093270 (Colombia) (individual) [SDNT]

RR TOUR, S.A. DE C.V., Lopez Cotilla 1994, C.P. 44140, Guadalajara, Mexico [SDNT]

RUBENACH ROIG, Juan Luis; DOB 18 Sep 1964; POB Bilbao Vizcaya Province, Spain; D.N.I. 18.197.545; Member ETA (individual) [SDGT]

RUEDA FAJARDO, Herberth Gonzalo, c/o LABORATORIOS GENERICOS VETERINARIOS, Bogota, Colombia; c/o FARMACOOP, Bogota, Colombia; c/o LABORATORIOS KRESSFOR DE COLOMBIA S.A., Bogota, Colombia; DOB 6 Oct 1964; Cedula No. 12126395 (Colombia) (individual) [SDNT]

RUEDA GIL, Camilo (a.k.a. ''EL PAISA''; a.k.a. ''EL PRIMO''; a.k.a. ''MUNECA''), Colombia; DOB 03 Aug 1969; POB Bogota, Colombia; citizen Colombia; nationality Colombia; Cedula No. 79499884 (Colombia); Passport AJ520060 (Colombia) (individual) [SDNTK]

RUELAS MARTINEZ, Felipe, Calle Ventisca 2359 Secc. Dorado, Colonia Playas de

Tijuana, Tijuana, Baja California, Mexico; Calle Saino 5, Colonia Hacienda del Tepeyac, Zapopan, Jalisco CP 45053, Mexico; DOB 6 Jun 1962 (individual) [SDNTK]

RUELAS MARTINEZ, Jose de la Cruz, Calle de la Ventisca 640, Colonia Playas Seccion Dorado, Tijuana, Baja California CP 22205, Mexico; c/o CONSULTORIA DE INTERDIVISAS, S.A. DE C.V., Tijuana, Baja California, Mexico; c/o MULTISERVICIOS ALPHA, S.A. DE C.V., Tijuana, Baja California, Mexico; Calle Ventisca 2359 Secc. Dorado, Colonia Playas de Tijuana, Tijuana, Baja California, Mexico; DOB 30 Mar 1965; POB Guadalajara, Jalisco, Mexico; Passport 01020023629 (Mexico) (individual) [SDNTK]

RUELAS MARTINEZ, Jose Manuel, c/o MULTISERVICIOS SIGLO, S.A. DE C.V., Tijuana, Baja California, Mexico; Esmeralda 3091, Colonia Residencial Victoria CR 45051, Zapopan, Jalisco CP 44550, Mexico; 402 Milagrosa Circle, Chula Vista, CA 91910; c/o GLOBAL FILMS, S.A. DE C.V., Tijuana, Baja California, Mexico; c/o HACIENDA DE DON JOSE RESTAURANT BAR, S.A. DE C.V., Tijuana, Baja California, Mexico; Av. Pque. Mexico Nte. 824, Colonia Playas de Tijuana, Tijuana, Baja California CP 22200, Mexico; c/o MULTISERVICIOS ALPHA, S.A. DE C.V., Tijuana, Baja California, Mexico; c/o MULTISERVICIOS GAMAL, S.A. DE C.V., Tijuana, Baja California, Mexico; DOB 16 Jun 1960; POB Talpa de Allende, Jalisco, Mexico; alt. POB Guadalajara, Jalisco, Mexico; Passport 036182282 (United States); R.F.C. RUMM–600616-G69 (Mexico); SSN 622–18–0486 (United States) (individual) [SDNTK]

RUELAS TOPETE, Carlos Antonio, Calle de la Bahia 3178, Colonia Playas Costa Hermosa, Tijuana, Baja California CP 22240, Mexico; Calle Ventisca 2359 Secc. Dorado, Colonia Playas de Tijuana, Tijuana, Baja California, Mexico; c/o HACIENDA DE DON JOSE RESTAURANT BAR, S.A. DE C.V., Tijuana, Baja California, Mexico; DOB 12 Aug 1968; POB Guadalajara, Jalisco, Mexico; R.F.C. RUTC–680812-PS6 (Mexico) (individual) [SDNTK]

RUELAS TOPETE, Eduardo, Calle del Volcan 682, Colonia Playas de Tijuana, Tijuana, Baja California CP 22200, Mexico; c/o CONSULTORIA DE OCCIDENTE, S.A. DE C.V., Guadalajara, Jalisco, Mexico; Ave. Pque. Mexico Sur 910, Colonia Playas de Tijuana, Tijuana, Baja California CP 22200, Mexico; c/o HACIENDA DE DON JOSE RESTAURANT BAR, S.A. DE C.V., Tijuana, Baja California, Mexico; DOB 20 Feb 1967; POB Guadalajara, Jalisco, Mexico; R.F.C. RUTE–670220-DVO (Mexico) (individual) [SDNTK]

RUELAS TOPETE, Jose Luis, c/o CONSULTORIA DE OCCIDENTE, S.A. DE C.V., Guadalajara, Jalisco, Mexico; DOB 13 Aug 1970; POB Guadalajara, Jalisco, Mexico; R.F.C. RUTL–700813-L31 (Mexico) (individual) [SDNTK]

RUIZ CASTANO, Maria Helena, c/o LADRILLERA LA CANDELARIA LTDA., Cali, Colombia; DOB 17 Nov 1970; Cedula No. 66901635 (Colombia); Passport 66901635 (Colombia) (individual) [SDNT]

RUIZ DE ALARCON 12 S.L., Calle Ruiz de Alarcon, 12, Madrid 28014, Spain; V.A.T. Number ES B83031682 (Spain) [SDNT]

RUIZ HERNANDEZ, Gregorio Rafael, c/o COMERCIALIZADORA OROBANCA, Cali, Colombia; DOB 20 May 1963; Cedula No. 16823501 (Colombia) (individual) [SDNT]

RUIZ POO, Ramon Miguel, Panama (individual) [CUBA]

RUIZ ZAVALA, Aleyda (a.k.a. RUIZ ZAVALA, Aleida), Calle Cerro de la Memoria No. 1976, Fraccionamiento Colinas de San Miguel, Culiacan, Sinaloa, Mexico; c/o TOYS FACTORY, S.A. DE C.V., Tijuana, Baja California, Mexico; c/o COMERCIALIZADORA BRIMAR'S, S.A. DE. C.V., Culiacan, Sinaloa, Mexico; c/o SIN-MEX IMPORTADORA, S.A. DE C.V., Mexico, Distrito Federal, Mexico; DOB 10 May 1962; POB Tamazula, Durango, Mexico; citizen Mexico; nationality Mexico; C.U.R.P. RUZA620510MDGZVL04 (Mexico); Electoral Registry No. RZZVAL62051010M200 (Mexico); R.F.C. RUZA6205108L5 (Mexico) (individual) [SDNTK]

RUNGRIN COMPANY LTD. (a.k.a. BORISAT RUNGRIN CHAMKAT), 275 Soi Thiam Ruammit, Ratchada Phisek Road, Huai Khwang district, Bangkok, Thailand [SDNTK]

RUPRAH, Sanjivan Singh (a.k.a. ''NASR, Samir M.''); DOB 9 Aug 1966; POB Kisumu, Kenya; nationality Kenya; Passport 790015037 (United Kingdom) issued 10 Jul 1998 expires 10 Jul 2008; alt. Passport D–001829–00 (Liberia); Businessman; Former Deputy Commissioner, Bureau of Maritime Affairs of Liberia (individual) [DRCONGO] [LIBERIA]

RUSAKEVICH, Vladimir Vasilyevich (a.k.a. RUSAKEVICH, Uladzimir Vasilievich); DOB 13 Sep 1947; POB Vygonoshchi, Belarus; citizen Belarus; nationality Belarus; Minister of Information (individual) [BELARUS]

RUSDAN, Abu (a.k.a. ABU THORIQ; a.k.a. RUSDJAN; a.k.a. RUSJAN; a.k.a. RUSYDAN; a.k.a. THORIQUDDIN; a.k.a. THORIQUIDDIN; a.k.a. THORIQUIDIN; a.k.a. TORIQUDDIN); DOB 16 Aug 1960; POB Kudus, Central Java, Indonesia (individual) [SDGT]

RUSERE, Tinos, 12 Cooke Avenue, Southerton, Harare, Zimbabwe; DOB 10 May 1945; Deputy Minister of Mines and Mining Development (individual) [ZIMBABWE]

RUSHITI, Sait (a.k.a. RUXHETI, Sait); DOB 7 Nov 1966 (individual) [BALKANS]

RZOOKI, Hanna, Iraq; Chairman of REAL ESTATE BANK (individual) [IRAQ2]

S H NG TRADING, 3 Shenton Way, #10–01 Shenton House, Singapore 068805, Singapore [BURMA]

S.M.I. SEWING MACHINES ITALY S.P.A., Italy [IRAQ2]

SAAVEDRA RESTREPO, Jesus Maria, Calle 5 No. 46–83 Local 119, Cali, Colombia; c/o CONSTRUCTORA DIMISA LTDA., Cali, Colombia; c/o INMOBILIARIA U.M.V. S.A., Cali, Colombia; c/o CONCRETOS CALI S.A., Cali, Colombia; DOB 10 Jul 1958; Cedula No. 16603482 (Colombia) (individual) [SDNT]

SABAGH DE CURE, Maria Dunia, c/o CURE SABAGH Y CIA. S.C.S., Barranquilla, Colombia; c/o FUDIA LTDA., Barranquilla, Colombia; DOB 02 Jan 1947; POB Barranquilla, Colombia; Cedula No. 33278803 (Colombia); Passport AE330188 (Colombia) (individual) [SDNT]

SABALAN (a.k.a. IRAN SABALAN); Vessel Registration Identification IMO 9346524 (vessel) [NPWMD]

SABOGAL ZULUAGA, Orlando (a.k.a. CONTRERAS VIVAS, Juan Pablo; a.k.a. GUILLEN JIMENEZ, Carlos Alberto; a.k.a. SABOGAL, Alberto; a.k.a. SALAZAR QUINTERO, Carlos Alberto; a.k.a. ''CAREQUESO''; a.k.a. ''EL MONO SABOGAL''), Calle 14 No. 30–153, Medellin, Antioquia, Colombia; Paseo 5 de Julio, Barrio Libertad, Municipio Bolivar, Tachira, Venezuela; Paseo 5 de Julio, Barrio Libertad, San Antonio, Tachira, Venezuela; Calle 18 No. 5N–21, Apt. 302, Cartago, Colombia; c/o ORLANDO SABOGAL ZULUAGA E HIJOS & CIA S EN C, Colombia; Calle 30 No. 3B–45, La Campina, Pereira, Risaralda, Colombia; Caracas, Venezuela; DOB 22 Feb 1966; alt. DOB 16 Sep 1965; POB Toro, Valle, Colombia; Cedula No. 21171060 (Venezuela); alt. Cedula No. 18505378 (Colombia); alt. Cedula No. 12773520 (Venezuela); alt. Cedula No. 94318435 (Colombia); Passport 18505378 (Colombia); alt. Passport AC635727 (Colombia); alt. Passport AG496255 (Colombia); alt. Passport AE533626 (Colombia) (individual) [SDNT]

SACKS FACTORY (a.k.a. PLASTIC SACKS FACTORY), P.O. Box 2328, Khartoum, Sudan [SUDAN]

SAEED, Muhammad (a.k.a. HAFIZ SAHIB; a.k.a. SAEED, Hafiz; a.k.a. SAEED, Hafiz Mohammad; a.k.a. SAEED, Hafiz Muhammad; a.k.a. SAYED, Hafiz Mohammad; a.k.a. SAYEED, Hafez Mohammad; a.k.a. SAYID, Hafiz Mohammad; a.k.a. SYEED, Hafiz Mohammad; a.k.a. ''TATA JI''), House No. 116 E, Mohalla Johar, Town: Lahore, Tehsil:, Lahore City, Lahore District, Pakistan; DOB 5 Jun 1950; POB Sargodha, Punjab, Pakistan; nationality Pakistan; National ID No. 3520025509842–7 (Pakistan) (individual) [SDGT]

SAENZ VARGAS, Guillermo Leon (a.k.a. ''ALFONSO CANO''); DOB 22 Jul 1948; POB Bogota, Cundinamarca, Colombia; Cedula No. 17122751 (Colombia) (individual) [SDNTK]

SAEZ DE EGUILAZ MURGUIONDO, Carlos; DOB 9 Dec 1963; POB San Sebastian, Guipuzcoa Province, Spain; D.N.I. 15.962.687 (Spain); Member ETA (individual) [SDGT]

SAF TECH S.L., Calle Serrano 52, Barcelona 08031, Spain; C.R. No. B62398060 (Spain) [SDNTK]

SAFAVI, Yahya Rahim (a.k.a. AL-SIFAWI, Yahya Rahim; a.k.a. RAHIM SAFAWI, Yahia; a.k.a. RAHIM-SAFAVI, Yahya; a.k.a. SAFAVI, Rahim; a.k.a. YAHYA RAHIM-SAFAVI, Seyyed; a.k.a. YAHYA SAFAVI, Sayed); DOB circa 1952; POB Esfahan, Iran (individual) [NPWMD]

SAFETY EQUIPMENT PROCUREMENT COMPANY (a.k.a. ''SEP CO.''), P.O. Box 16785–195, Tehran, Iran [NPWMD]

SAHAND (a.k.a. IRAN SAHAND); Vessel Registration Identification IMO 9328900 (vessel) [NPWMD]

SAHEL CONSULTANT ENGINEERS, No. 57, Eftekhar St., Larestan St., Motahhari Ave, Tehran, Iran; P.O. Box 16765–34, Tehran, Iran [NPWMD]

SAHINPASIC, Senad; DOB circa 1951; POB Foca, Bosnia-Herzegovina (individual) [BALKANS]

SAHIRON, Radulan (a.k.a. SAHIRON, Radullan; a.k.a. SAHIRUN, Radulan; a.k.a. ''COMMANDER PUTOL''; a.k.a. ''SAJIRUN, Radulan''); DOB 1955; alt. DOB circa 1952; POB Kaunayan, Patikul, Jolo Island, the Philippines; nationality Philippines (individual) [SDGT]

SAIEH JAMIS, Carlos Ernesto, 780 NW 42nd Avenue, Suite 516, Miami, FL 33126; c/o URBANIZADORA ALTAVISTA INTERNACIONAL S.A., Barranquilla, Colombia; c/o RIXFORD INVESTMENT CORPORATION, Panama City, Panama; c/o FINANZAS DEL NORTE LUIS SAIEH Y CIA. S.C.A., Barranquilla, Colombia; 9100 South Dadeland Boulevard, Suite 912, Miami, FL 33156; c/o VILLAROSA INVESTMENTS FLORIDA, INC., Miami, FL; c/o RAMAL S.A., Bogota, Colombia; c/o KAREN OVERSEAS, INC., Panama City, Panama; c/o ALMACAES S.A., Bogota, Colombia; c/o MLA INVESTMENTS, INC., Virgin Islands, British; Carrera 56 No. 79–102 Piso-10, Barranquilla, Colombia; 780 NW Le Jeune Rd, Suite 516, Miami, FL 33126; c/o KATTUS II CORPORATION, Panama City, Panama; c/o INVERSIONES DEL PRADO ABDALA SAIEH Y CIA. S.C.A., Barranquilla, Colombia; c/o GRANADA ASSOCIATES, INC., Miami, FL; c/o ALM INVESTMENT FLORIDA, INC., Miami, FL; c/o SALMAN CORAL WAY PARTNERS, Miami, FL; c/o MOISES SAIEH Y CIA. S.C.A., Barranquilla, Colombia; c/o MARC LLC, Miami, FL; c/o ILOVIN S.A., Bogota, Colombia; c/o G.L.G. S.A., Bogota, Colombia; c/o ELIZABETH OVERSEAS INC., Panama City, Panama; c/o CORPORACION DE ALMACENES POR DEPARTAMENTOS S.A., Bogota, Colombia; c/o CARLOS SAIEH Y CIA. S.C.S., Barranquilla, Atlantico, Colombia; c/o KAREN OVERSEAS FLORIDA, INC., Miami, FL; c/o CONSTRUCTORA ALTAVISTA INTERNACIONAL S.A., Barranquilla, Colombia; c/o CONFECCIONES LORD S.A., Barranquilla, Atlantico, Colombia; Nine Island Avenue, Unit 1411, Miami Beach, FL; c/o BLACKMORE INVESTMENTS A.V.V., Oranjestad, Aruba; c/o C.W. SALMAN PARTNERS, Miami, FL; c/o BRUNELLO LTD., Grand Cayman, Cayman Islands; DOB 24 Feb 1964; POB Barranquilla, Colombia; citizen Colombia; nationality Colombia; Cedula No. 8739066 (Colombia); Passport AH006864 (Colombia) (individual) [SDNT]

SAIEH JASSIR, Abdala, Carrera 56 No.19–40 Apt. 11, Barranquilla, Colombia; c/o VILLAROSA INVESTMENTS FLORIDA, INC., Miami, FL; c/o CONFECCIONES LORD S.A., Barranquilla, Atlantico, Colombia; 780 NW Le Jeune Road, Suite 516, Miami, FL 33126; 19667 Turnberry Way A-G, North Miami Beach, FL; c/o MLA INVESTMENTS INC., Virgin Islands, British; c/o SALMAN CORAL WAY PARTNERS, Miami, FL; c/o C.W. SALMAN PARTNERS, Miami, FL; c/o JAMCE INVESTMENTS LTD, Grand Cayman, Cayman Islands; c/o GRANADA ASSOCIATES, INC., Miami, FL; c/o KATTUS CORPORATION, Barbados; c/o KAREN OVERSEAS FLORIDA, INC., Miami, FL; c/o CONSTRUCTORA ALTAVISTA INTERNACIONAL S.A., Barranquilla, Colombia; c/o ALM INVESTMENT FLORIDA, INC., Miami, FL; 780 NW 42nd Avenue, Suite 516, Miami, FL 33126; c/o VILLAROSA INVESTMENTS CORPORATION, Panama City, Panama; c/o URBANIZADORA ALTAVISTA INTERNACIONAL S.A., Barranquilla, Colombia; c/o KAREN OVERSEAS, INC., Panama City, Panama; c/o ELIZABETH OVERSEAS INC., Panama City, Panama; DOB 19 Dec 1919; citizen Colombia; Cedula No. 812202 (Colombia); Passport AF547128 (Colombia) (individual) [SDNT]

SAIEH MUVDI, Moises Abdal, c/o KATTUS II CORPORATION, Panama City, Panama; c/o ILOVIN S.A., Bogota, Colombia; c/o C.W. SALMAN PARTNERS, Miami, FL; c/o CORPORACION DE ALMACENES POR DEPARTAMENTOS S.A., Bogota, Colombia; 9100 South Dadeland Boulevard, Suite 912, Miami, FL 33156; 20301 W Country Club Drive, Apt 824, Aventura, FL 33180; 19667 Turnberry Way, Unit 12G, Miami, FL 33180; c/o RAMAL S.A., Bogota, Colombia; c/o MOISES SAIEH Y CIA. S.C.A., Barranquilla, Colombia; 1405 SW 107th Ave, Ste 301B, Miami, FL; 780 NW 42nd Avenue, Suite 516, Miami, FL 33126; 19667 NE 36 Court A 12-G, North Miami Beach, FL 33180; c/o SALMAN CORAL WAY PARTNERS, Miami, FL; c/o G.L.G. S.A., Bogota, Colombia; c/o CONSTRUCTORA ALTAVISTA INTERNACIONAL S.A., Barranquilla, Colombia; c/o CARLOS SAIEH Y CIA. S.C.S., Barranquilla, Atlantico, Colombia; Carrera 56 No. 79–40, Apt 7, Barranquilla, Colombia; c/o SUNSET & 97TH HOLDINGS, LLC., Miami, FL; c/o KAREN OVERSEAS, INC., Panama City, Panama; c/o MLA INVESTMENTS, INC., Virgin Islands, British; c/o RIXFORD INVESTMENT CORPORATION, Panama City, Panama; 780 NW Le Jeune Rd, Suite 516, Miami, FL 33126; c/o URBANIZADORA ALTAVISTA INTERNACIONAL S.A., Barranquilla, Colombia; c/o INVERSIONES DEL PRADO ABDALA SAIEH Y CIA. S.C.A., Barranquilla, Colombia; c/o GRANADA ASSOCIATES, INC., Miami, FL; c/o KATTUS CORPORATION, Barbados; c/o ALM INVESTMENT FLORIDA, INC., Miami, FL; c/o VILLAROSA INVESTMENTS FLORIDA, INC., Miami, FL; c/o KAREN OVERSEAS FLORIDA, INC., Miami, FL; c/o JAMCE INVESTMENTS LTD., Grand Cayman, Cayman Islands; c/o ELIZABETH OVERSEAS INC., Panama City, Panama; c/o CONFECCIONES LORD S.A., Barranquilla, Atlantico, Colombia; c/o ALMACAES S.A., Bogota, Colombia; c/o VILLAROSA INVESTMENTS CORPORATION, Panama City, Panama; DOB 06 Jun 1945; POB Pamplona, Norte de Santander; citizen Colombia; Cedula No. 7427466 (Colombia) (individual) [SDNT]

SAI'ID, Shaykh (a.k.a. AHMAD, Mustafa Muhammad); POB Egypt (individual) [SDGT]

SAINOVIC, Nikola; DOB 7 Dec 1948; POB Bor, Serbia and Montenegro; Ex-FRY Deputy Prime Minister; ICTY indictee in custody (individual) [BALKANS]

SAKABUYA, Morris; Deputy Minister of Local Government, Public Works, and Urban Development (individual) [ZIMBABWE]

SAKUPWANYA, Stanley; DOB circa 1945; Deputy Secretary for Disabled and Disadvantaged (individual) [ZIMBABWE]

SALAFIST GROUP FOR CALL AND COMBAT (a.k.a. AL-QA'IDA IN THE ISLAMIC MAGHREB; a.k.a. AQIM; a.k.a. GSPC; a.k.a. LE GROUPE SALAFISTE POUR LA PREDICATION ET LE COMBAT; a.k.a. SALAFIST GROUP FOR PREACHING AND COMBAT; a.k.a. TANZIM AL-QA'IDA FI BILAD AL-MAGHRIB AL-ISLAMIYA) [FTO] [SDGT]

SALAH, Mohammad Abd El-Hamid Khalil (a.k.a. AHMAD, Abu; a.k.a. AHMED, Abu; a.k.a. SALAH, Mohammad Abdel Hamid Halil; a.k.a. SALAH, Muhammad A.), P.O. Box 2616, Bridgeview, IL 60455–661; P.O. Box 2578, Bridgeview, IL 60455; Israel; 9229 South Thomas, Bridgeview, IL 60455; DOB 30 May 1953; Passport 024296248 (United States); SSN 342–52–7612 (individual) [SDT]

SALAH, Muhammad (a.k.a. HASANAYN, Nasr Fahmi Nasr) (individual) [SDGT]

SALAMI, Mohamed Ahmad (a.k.a. SALAME, Mohamed Ahmad); DOB 22 Sep 1961; nationality Lebanon; Owner, Mohamed Group of Companies; former President of Liberia Charles Taylor's informal diplomatic representative (individual) [LIBERIA]

SALAZAR ARCILA, Yolanda, Carrera 6 No. 15–30, Quimbaya, Quindio, Colombia; c/o PLASTEC LTDA., Colombia; Cedula No. 25018274 (Colombia) (individual) [SDNT]

SALAZAR LUGO, Nelson, c/o TURISMO HANSA S.A., San Andres, Colombia; DOB 14 Jul 1955; POB Colombia; Cedula No. 16597419 (Colombia); Passport AH682171 (Colombia) (individual) [SDNT]

SALAZAR, Jose Leonel, c/o INMOBILIARIA U.M.V. S.A., Cali, Colombia; c/o COMERCIALIZADORA INTERNACIONAL VALLE DE ORO S.A., Cali, Colombia; DOB 14 Mar 1956; Cedula No. 10529253 (Colombia) (individual) [SDNT]

SALCEDO MARTINEZ, Myriam (a.k.a. SALCEDO DE VARGAS, Myriam), c/o FUNDASER, Cali, Colombia; c/o FUNDACION VIVIR MEJOR, Cali, Colombia; Cedula No. 41572808 (Colombia); Passport 41572808 (Colombia) (individual) [SDNT]

SALCEDO RAMIREZ, Jamie, c/o INMOBILIARIA U.M.V. S.A., Cali, Colombia; DOB 25 Dec 1964; Cedula No. 16706222 (Colombia) (individual) [SDNT]

SALCEDO RAMIREZ, Nhora Clemencia, c/o ADMINISTRACION INMOBILIARIA BOLIVAR S.A., Cali, Colombia; c/o INMOBILIARIA BOLIVAR LTDA., Cali,

Colombia; DOB 20 Nov 1956; Cedula No. 31273613 (Colombia) (individual) [SDNT]
SALDARRIAGA ACEVEDO, Carlos Omar, c/o RADIO UNIDAS FM S.A., Cali, Colombia; Calle 9B No. 50–100 apt. 102, Cali, Colombia; DOB 16 Jan 1954; alt. DOB 6 Jan 1954; Cedula No. 14998632 (Colombia) (individual) [SDNT]
SALEH AL-SAADI, Nassim Ben Mohamed Al-Cherif ben Mohamed (a.k.a. ABOU ANIS), Via Monte Grappa 15, Arluno (Milan), Italy; DOB 30 Nov 1974; POB Haidra Al-Qasreen, Tunisia; nationality Tunisia; Passport M 788331 issued 28 Sep 2001 expires 27 Sep 2006; arrested 30 Sep 2002 (individual) [SDGT]
SALEH, Dr. Abdul Latif (a.k.a. ABU AMIR; a.k.a. SALEH ABU HUSSEIN, Abdul Latif A.A.; a.k.a. SALEH, Abdul Latif A.A.; a.k.a. SALEH, Abdyl Latif; a.k.a. SALEH, Dr. Abd al-Latif; a.k.a. SALIH, Abd al-Latif), United Arab Emirates; DOB 5 Mar 1957; POB Baghdad, Iraq; citizen Jordan; alt. citizen Albania; Passport D366 871 (Jordan) (individual) [SDGT]
SALEH, Nedal (a.k.a. ''HITEM''), Via di Saliceto n.51/9, Bologna, Italy; Via Milano n.105, Casal di Principe (Caserta), Italy; DOB 1 Mar 1970; POB Taiz, Yemen (individual) [SDGT]
SALGADO MOSQUERA, Ricardo Ignacio, c/o MACROFARMA S.A., Pereira, Colombia; c/o FARMALIDER S.A., Cali, Colombia; Cedula No. 10216576 (Colombia); Passport 10216576 (Colombia) (individual) [SDNT]
SALI JR., Jainal Antel (a.k.a. ''ABU SOLAIMAN''; a.k.a. ''ABU SOLAYMAN''; a.k.a. ''APONG SOLAIMAN''; a.k.a. ''APUNG''); DOB 1 Jun 1965; POB Barangay Lanote, Bliss, Isabele, Basilan, the Philippines; nationality Philippines (individual) [SDGT]
SALIH, Abd al-Munim Ahmad (a.k.a. SALEH, Abdel Moneim Ahmad), Iraq; DOB 1943; Former Minister of Awqaf and Religious Affairs (individual) [IRAQ2]
SALIM S.A., Calle 15 No. 10–52, La Union, Valle, Colombia; NIT # 821001412–4 (Colombia) [SDNT]
SALIMI, Hosein (a.k.a. SALAMI, Hoseyn; a.k.a. SALAMI, Hossein; a.k.a. SALAMI, Hussayn); citizen Iran; nationality Iran; Passport D08531177 (Iran) (individual) [NPWMD]
SALINAS CUEVAS, Jorge Rodrigo, Calle 13B No. 37–86 apt. 201–5, Cali, Colombia; c/o DISDROGAS LTDA., Yumbo, Valle, Colombia; DOB 10 Dec 1945; POB Neiva, Huila, Colombia; alt. POB Cali, Colombia; Cedula No. 14930332 (Colombia); Passport AG684621 (Colombia) (individual) [SDNT]
SALINAS PEREZ, Ovidio (a.k.a. ROJAS, Juan Antonio; a.k.a. ''EL EMBAJADOR''; a.k.a. ''JOSE LUIS''), Colombia; DOB 03 Jul 1945; citizen Colombia; Cedula No. 17125959 (Colombia); International FARC Commission Member for Panama (individual) [SDNTK]
SALMAN CORAL WAY PARTNERS, 2731 Coral Way, Miami, FL 33145; US FEIN 59–2276524 (United States) [SDNT]
SALOME GRAJALES Y CIA. LTDA., Calle 53 No. 25–30, Bogota, Colombia; NIT # 800141337–3 (Colombia) [SDNT]
SALUD NATURAL MEXICANA, S.A. DE C.V., Alvaro Obregon 250, Colonia Agua Blanca, Zapopan, Jalisco 45235, Mexico; Avenida Inglaterra #3109, Guadalajara, Jalisco 44500, Mexico; R.F.C. SNM–950403-FA5 (Mexico) [SDNTK]
SAMARIA ARRENDAMIENT, Cali, Colombia [SDNT]
SAMARIA CANAS, Cali, Colombia [SDNT]
SAMARIA INTERESES, Cali, Colombia [SDNT]
SAMARIA TIERRAS, Cali, Colombia [SDNT]
SAMIU, Izair; DOB 23 Jul 1963 (individual) [BALKANS]
SAMSAENG, Suthep (a.k.a. SUTHEP, Samsaeng; a.k.a. WEI, Ta Chou; a.k.a. ''AH CHOU''; a.k.a. ''AH JOE''), 409/4 Soi Wachirathamsathih 34, Tambon Sam Sen Nok, Huay Khwang, Bangkok, Thailand; c/o DEHONG THAILONG HOTEL CO., LTD., Yunnan Province, China; DOB 12 May 1971; National ID No. 3100905657113 (Thailand) expires May 2006; Passport E382464 (Thailand) expires Jan 2007 (individual) [SDNTK]
SAMUDRA, Imam (a.k.a. BIN SIHABUDIN, Abdul Aziz; a.k.a. YUNSHAR, Faiz; a.k.a. ''ABDUL AZIZ''; a.k.a. ''ABU OMAR''; a.k.a. ''FATIH''; a.k.a. ''HENDRI''; a.k.a. ''HERI''; a.k.a. ''KUDAMA''); DOB 14 Jan 1970; POB Serang, Banten, Indonesia (individual) [SDGT]
SAN AIR GENERAL TRADING FZE (a.k.a. SAN AIR GENERAL TRADING LLC), 811 S. Central Expwy., Ste 210, Richardson, TX 75080; P.O. Box 932–20C, Ajman, United Arab Emirates; P.O. Box 2190, Ajman, United Arab Emirates [LIBERIA]
SAN MATEO S.A. (f.k.a. INVERSIONES BETANIA LTDA.; f.k.a. INVERSIONES BETANIA S.A.), Carrera 3 No. 12–40, Cali, Colombia; Avenida 2N No. 7N-55 of. 501, Cali, Colombia; Carrera 53 No. 13–55 apt. 102B, Cali, Colombia; NIT # 890330910–2 (Colombia) [SDNT]
SAN VICENTE S.A. (f.k.a. INVERSIONES INVERVALLE S.A.; f.k.a. INVERVALLE S.A.), Calle 70N No. 14–31, Cali, Colombia; Avenida 2N No. 7N–55 of. 501, Cali, Colombia; Avenida 4 Norte No. 17N–43 L.1, Cali, Colombia; NIT # 800061212–8 (Colombia) [SDNT]
SANABEL RELIEF AGENCY LIMITED (a.k.a. AL-RAHAMA RELIEF FOUNDATION LIMITED; a.k.a. SANABEL L'IL-IGATHA; a.k.a. SANABEL RELIEF AGENCY; a.k.a. SARA; a.k.a. SRA), 1011 Stockport Road, Levenshulme, Manchester M9 2TB, United Kingdom; P.O. Box 50, Manchester M19 2SP, United Kingdom; 63 South Road, Sparkbrook, Birmingham B11 1EX, United Kingdom; 54 Anson Road, London NW2 6AD, United Kingdom; 98 Gresham Road, Middlesbrough, United Kingdom; Registered Charity No. 1083469 (United Kingdom); Registration ID 3713110 (United Kingdom); http://www.sanabel.org.uk (Web site); info@sanabel.org.uk (e-mail). [SDGT]
SANABIL ASSOCIATION FOR RELIEF AND DEVELOPMENT (a.k.a. AL SANABIL; a.k.a. AL-SANBAL; a.k.a. ASANABIL; a.k.a. JAMI'A SANABIL; a.k.a. JAMI'A SANABIL LIL IGATHA WA AL-TANMIYZ; a.k.a. JA'MIA SANBLE LLAGHATHA WA ALTINMIA; a.k.a. SANABAL; a.k.a. SANABEL; a.k.a. SANABIL; a.k.a. SANABIL AL-AQSA; a.k.a. SANABIL FOR AID AND DEVELOPMENT; a.k.a. SANABIL FOR RELIEF AND DEVELOPMENT; a.k.a. SANABIL GROUP FOR RELIEF AND DEVELOPMENT; a.k.a. SANIBAL; a.k.a. SANNABIL; a.k.a. SANNIBIL; a.k.a. SINABUL), Sidon, Lebanon [SDGT]
SANABRIA SANABRIA, Pablo Emilio, c/o CAJA SOLIDARIA, Bogota, Colombia; c/o FARMAVISION LTDA., Bogota, Colombia; Avenida Dorado No. 73–62, Bogota, Colombia; c/o COPSERVIR LTDA., Bogota, Colombia; Cedula No. 79579826 (Colombia) (individual) [SDNT]
SANAM INDUSTRIAL GROUP (a.k.a. SANAM INDUSTRIES GROUP), Pasdaran Road 15, Tehran, Iran [NPWMD]
SANCHEZ ACEVES, Raul, c/o STRONG LINK DE MEXICO, S.A. DE C.V., Tijuana, Baja California, Mexico; Flores Magon 8013, Zona Centro, Tijuana, Baja California, Mexico; DOB 21 Apr 1949; POB Distrito Federal, Mexico; citizen Mexico; nationality Mexico; C.U.R.P. SAAR490421HDFNCL09 (Mexico); R.F.C. SAAR–490421-MI9 (Mexico) (individual) [SDNTK]
SANCHEZ CANDELO, Piedad Rocio, c/o CALI @ TELE.COM LTDA., Cali, Valle, Colombia; c/o COMUNICACIONES ABIERTAS CAMARY LTDA., Cali, Valle, Colombia; DOB 20 Nov 1952; POB Colombia; Cedula No. 31252839 (Colombia) (individual) [SDNT]
SANCHEZ CURIEL, Silvia Patricia, c/o M Q CONSULTORES, S.A. DE C.V., Tijuana, Baja California, Mexico; DOB 28 Sep 1976; POB Guadalajara, Jalisco, Mexico (individual) [SDNTK]
SANCHEZ DE VALENCIA, Dora Gladys, c/o INMOBILIARIA U.M.V. S.A., Cali, Colombia; DOB 7 AUG 1955; Cedula No. 31273248 (Colombia) (individual) [SDNT]
SANCHEZ JIMENEZ, Jesus Maria Alejandro (a.k.a. ''CHUCHO''; a.k.a. ''EL PRIMO''; a.k.a. ''SCUBI''; a.k.a. ''SCUBY''), c/o GANADERIA ARIZONA, Medellin, Colombia; Hacienda Arizona, Caucasia, Antioquia, Colombia; Calle 11 No. 23–80, Pereira, Colombia; DOB 06 Nov 1975; POB Pereira, Colombia; Cedula No. 10026001 (Colombia); Passport AF400955 (Colombia) (individual) [SDNT]
SANCHEZ OLAYA, Martha, c/o LABORATORIOS PROFARMA LTDA., Bogota, Colombia; DOB 20 May 1963; Cedula No. 65692953 (Colombia); Passport 65692953 (Colombia) (individual) [SDNT]
SANCHEZ OSUNA, Carlos Alberto, Blvd. Industrial 1700, Colonia Otay Tecnologico, Tijuana, Baja California, Mexico; c/o GRUPO GAMAL, S.A. DE C.V., Guadalajara, Jalisco, Mexico; DOB 29 Mar 1971 (individual) [SDNTK]
SANCHEZ RUA, Rafael Angel, Finca La Quichita, Anserma, Colombia; c/o ALMACEN Y COMPRAVENTA LOS 3 OROS, Cartago, Valle, Colombia; Calle 17 Bis. No. 2N–74, Cartago, Valle, Colombia; Finca La Fortaleza, Anserma, Colombia; Finca El Encanto, Anserma, Colombia; c/o MOTEL MOMENTOS E.U., Cartago, Valle, Colombia; Finca Quiebra de Italia, Anserma, Colombia; Finca La Perlita, Anserma, Colombia; c/o GRANJA PORCICOLA LA FORTALEZA, Cartago,

Valle, Colombia; DOB 22 Aug 1966; POB Ansermanuevo, Valle, Colombia; Cedula No. 16219873 (Colombia); Passport AF866705 (Colombia) (individual) [SDNT]

SANCHEZ VARILLA, Luis Manuel; DOB 1 Feb 1964; Cedula No. 8174649 (Colombia) (individual) [SDNTK]

SANCLEMENTE BEDOYA, Claudia Patricia, c/o INTERNACIONAL DE DIVISAS S.A., Cali, Colombia; c/o INTERNACIONAL DE DIVISAS S.A., LLC, Miami, FL; c/o OBURSATILES S.A., Cali, Colombia; c/o VALORCORP S.A., Bogota, Colombia; DOB 5 Dec 1968; Cedula No. 31999055 (Colombia); Passport 31999055 (Colombia) (individual) [SDNT]

SANCLEMENTE BEDOYA, Flor de Maria, c/o FUNDACION VIVIR MEJOR, Cali, Colombia; c/o FUNDASER, Cali, Colombia; c/o COMERCIALIZADORA INTERTEL S.A., Cali, Colombia; c/o COLIMEX LTDA., Cali, Colombia; c/o DISTRIBUIDORA SANAR DE COLOMBIA S.A., Cali, Colombia; DOB 4 Sep 1964; Cedula No. 31931887 (Colombia); N.I.E. X2303467-V (Spain); Passport 31931887 (Colombia) (individual) [SDNT]

SAND SWAN (f.k.a. ANA I) (vessel) [CUBA]

SANDOVAL AHIUMADA, Mavenka, c/o COPSERVIR LTDA., Bogota, Colombia; c/o LITOPHARMA, Barranquilla, Colombia; c/o CAJA SOLIDARIA, Bogota, Colombia; Cedula No. 32873688 (Colombia) (individual) [SDNT]

SANDOVAL GUARIN, Luz Stella, c/o COPSERVIR LTDA., Bogota, Colombia; Carrera 26C 7 No. 76A–75 ap. 2A, Barranquilla, Colombia; c/o LITOPHARMA, Barranquilla, Colombia; Cedula No. 32608167 (Colombia) (individual) [SDNT]

SANDOVAL SALAZAR, Ricardo, c/o TARRITOS S.A., Cali, Colombia; c/o AGROPECUARIA LINDARAJA S.A., Cali, Colombia; Cedula No. 16683550 (Colombia) (individual) [SDNT]

SANDRANA CANAS, Cali, Colombia [SDNT]

SANGSIRI KANKASET COMPANY LIMITED, 168 Moo 9, Khi Lek, Mae Taeng, Chiang Mai 50150, Thailand; Registration ID 0505538000783 (Thailand) issued 08 Feb 1955 [SDNTK]

SANKOH, Foday; Deceased (individual) [LIBERIA]

SANTA CRUZ IMPERIAL AIRLINES, P.O. Box 60315, Dubai, United Arab Emirates; Sharjah, United Arab Emirates [LIBERIA]

SANTACOLOMA JARAMILLO, Gloria Maria (a.k.a. SANTACOLOMA DE JARAMILLO, Gloria Maria; a.k.a. SANTACOLOMA HOYOS, Gloria Maria), c/o FARMATEL E.U., Bogota, Colombia; c/o REPRESENTACIONES Y DISTRIBUCIONES HUERTAS Y ASOCIADOS S.A., Bogota, Colombia; DOB 26 Jul 1962; Cedula No. 31886388 (Colombia); Passport 31886388 (Colombia) (individual) [SDNT]

SANTACRUZ CASTRO, Ana Milena, c/o AUREAL INMOBILIARIA LTDA., Bogota, Colombia; c/o URBANIZACIONES Y CONSTRUCCIONES LTDA., DE CALI, Cali, Colombia; c/o SAMARIA LTDA., Cali, Colombia; c/o COMERCIALIZACION Y FINANCIACION DE AUTOMOTORES S.A., Cali, Colombia; c/o INVERSIONES SANTA LTDA., Cali, Colombia; c/o MIRALUNA LTDA., Cali, Colombia; c/o SOCIEDAD CONSTRUCTORA LA CASCADA S.A., Cali, Colombia; c/o INMOBILIARIA SAMARIA LTDA., Cali, Colombia; c/o INVERSIONES INTEGRAL LTDA., Cali, Colombia; DOB 31 Mar 65; Cedula No. 31929808 (Colombia); Passport 31929808 (Colombia); alt. Passport AB151189 (Colombia) (individual) [SDNT]

SANTACRUZ LONDONO, Jose (a.k.a. ''CHEPE''; a.k.a. ''DON CHEPE''; a.k.a. ''EL GORDO CHEPE''), Cali, Colombia; DOB 1 Oct 1943; Cedula No. 14432230 (Colombia); Passport AB149814 (Colombia) (individual) [SDNT]

SANTAMARINA DE LA TORRE, Rafael Garcia (a.k.a. GARCIA SANTAMARINA DE LA TORRE, Alfredo Rafael), Panama (individual) [CUBA]

SANTANILLA BOTACHE, Miguel (a.k.a. ''GENTIL DUARTE''); DOB 10 Dec 1963; POB Florencia, Caqueta, Colombia; citizen Colombia; nationality Colombia; Cedula No. 93123586 (Colombia) (individual) [SDNTK]

SANTIC, Vladimir; DOB 1 Apr 1958; POB Donja Veceriska, Bosnia-Herzegovina; ICTY indictee (individual) [BALKANS]

SANTO, Anabel, Avenida Insurgentes Sur No. 421, Bloque B Despacho 404, C.P. 06100, Mexico, D.F., Mexico (individual) [CUBA]

SANTOS, Ahmad (Ahmed) (a.k.a. DEL ROSARIO SANTOS III, Hilarion; a.k.a. DEL ROSARIO SANTOS, Ahmad Islam; a.k.a. DEL ROSARIO SANTOS, Hilarion; a.k.a. ''LAKAY, Abu''), No. 50 Purdue Street, Cubao Quezon City, Philippines; DOB 1971; POB Manila, Phillipines; RSM leader (individual) [SDGT]

SARA PROPERTIES LIMITED (a.k.a. SARA PROPERTIES), 104 Smithdown Road, Liverpool, Merseyside L7 4JQ, United Kingdom; 2a Hartington Road, Liverpool L8 0SG, United Kingdom; Registered Charity No. 4636613 (United Kingdom); http://www.saraproperties.co.uk (Web site). [SDGT]

SARABIA DIAZ, Carlos Cristino, Calle Dalia No. 37, Colonia Aguaruto, Culiacan, Sinaloa, Mexico; c/o COMERCIAL DOMELY, S.A. DE C.V., Toluca, Mexico, Mexico; c/o COMERCIALIZADORA BRIMAR'S, S.A. DE. C.V., Culiacan, Sinaloa, Mexico; c/o TOYS FACTORY, S.A. DE C.V., Tijuana, Baja California, Mexico; c/o COMERCIAL JOANA, S.A. DE C.V., Guadalajara, Jalisco, Mexico; DOB 24 Jul 1971; POB Culiacan, Sinaloa, Mexico; citizen Mexico; nationality Mexico; C.U.R.P. SADC710724HSLRZR03 (Mexico); R.F.C. SADC710724I71 (Mexico) (individual) [SDNTK]

SARAC, Ivan; DOB 4 Jun 1968; POB Sokolac, Serbia (individual) [BALKANS]

SARASTI GUERRERO, Rodrigo Jose, Avenida 10 Norte No. 18–35, Cali, Colombia; c/o KESMAN OVERSEAS, Road Town, Tortola, Virgin Islands, British; c/o ZARATAN CORPORATION, Road Town, Tortola, Virgin Islands, British; c/o ZARATAN CORPORATION, Cali, Colombia; c/o OBURSATILES S.A., Cali, Colombia; DOB 25 Aug 1964; Cedula No. 16699921 (Colombia); Passport 16699921 (Colombia) (individual) [SDNT]

SARMIENTO LAVERDE, Azucena Del Carmen, c/o MEGAPHARMA LTDA., Bogota, Colombia; Calle 22C No. 39–80, Bogota, Colombia; Carrera 20 No. 7–57, Bogota, Colombia; DOB 17 Nov 1954; Cedula No. 41649539 (Colombia) (individual) [SDNT]

SARMIENTO MARTINEZ, Diana, c/o TAURA S.A., Cali, Colombia; Cedula No. 65698369 (Colombia) (individual) [SDNT]

SAROVIC, Mirko; DOB 16 Sep 1956; POB Rogatica, Serbia (individual) [BALKANS]

SARRIA HOLGUIN, Ramiro Hernan 'Robert', c/o REPARACIONES Y CONSTRUCCIONES LTDA., Cali, Colombia; Avenida 6N No. 23D–16 of. L301, Cali, Colombia; c/o INVERSIONES ARA LTDA., Cali, Colombia; c/o INVERSIONES RODRIGUEZ MORENO, Cali, Colombia; c/o INVERSIONES MIGUEL RODRIGUEZ E HIJO, Cali, Colombia; c/o VALORES MOBILIARIOS DE OCCIDENTE S.A., Cali, Colombia; Carrera 100 No. 11–60 of. 603, AA 20903, Cali, Colombia; c/o INVERSIONES RODRIGUEZ ARBELAEZ, Cali, Colombia; Cedula No. 6078583 (Colombia) (individual) [SDNT]

SATTAR; Vessel Registration Identification IMO 9040479 (vessel) [NPWMD]

SAVANHU, Tendai; DOB 21 Mar 1968; Politburo Deputy Secretary of Transport and Social Welfare (individual) [ZIMBABWE]

SAYADI, Nabil Abdul Salam (a.k.a. ABOU ZEINAB), 69 Rue des Bataves, 1040 Etterbeek, Brussels, Belgium; Vaatjesstraat, 29, 2580 Putte, Belgium; DOB 01 Jan 1966; POB Tripoli, Lebanon; National ID No. 660000 73767 (Belgium); Passport 1091875; Public Security and Immigration No. 98.805 (individual) [SDGT]

SCHNEIDER, Daniel Martin (a.k.a. SCHNEIDER, Martin Daniel), Petrusstrasse 32, Herrensohr Dudweiler, Saarbruecken 66125, Germany; zum Gruehlingsstollen 1A, Friedrichstahl 66299, Germany; Rosenstrasse 2, Friedrichstahl 66299, Germany; DOB 9 Sep 1985; POB Neunkirchen, Germany; citizen Germany; Federal ID Card 2318229333; Passport 2318047793 (Germany); currently incarcerated at Schwalmstadt, Germany (individual) [SDGT]

SCHNEIDER, Simon, c/o OFFENBACH HAUSHALTWAREN B.V., Beverwijk, Netherlands; Netherlands; c/o BELS FLOWERS IMPORT EXPORT BVBA, Antwerpen, Belgium; DOB 14 Jul 1967; POB Hoorn, Netherlands; citizen Netherlands; Passport BA0199589 (Netherlands) (individual) [SDNTK]

SCIENTIFIC STUDIES AND RESEARCH CENTER (a.k.a. CENTRE D'ETUDES ET RECHERCHES; a.k.a. ''SSRC''), P.O. Box 4470, Damascus, Syria [NPWMD]

SCORE COMMERCIAL COMPANY LTD. (a.k.a. BORISAT SAKO KHOMMOESIAN CHAMKAT), 273 Soi Thiam Ruammit, Ratchada Phisek Road, Huai Khwang district, Bangkok, Thailand [SDNTK]

SCOTFIN LIMITED, 10th Floor ZB House, 46 Speke Avenue, P.O. Box 3198, Harare, Zimbabwe; Phone No. 263–4–751168; Fax No. 263–4–251029 [ZIMBABWE]

SCOTTLEE HOLDINGS (PVT) LTD, New Boundary House, London Road,

Sunningdale, Berkshire SL5 0DJ, United Kingdom; 124 Josiah Chinamano Avenue, P.O. Box CY3371, Causeway, Harare, Zimbabwe [ZIMBABWE]

SCOTTLEE RESORTS (a.k.a. SCOTTLEE RESORTS LIMITED), Newboundary House, London Road, Sunningdale, Berkshire SL5 0DJ, United Kingdom; 124 Josiah Chinamano Avenue, P.O. Box CY 3371, Causeway, Harare, Zimbabwe [ZIMBABWE]

SEA BLOOM (a.k.a. IRAN SEA BLOOM); Vessel Registration Identification IMO 9167291 (vessel) [NPWMD]

SEA FLOWER; Vessel Registration Identification IMO 9167289 (vessel) [NPWMD]

SEA STATE (a.k.a. IRAN SEA STATE); Vessel Registration Identification IMO 9167265 (vessel) [NPWMD]

SEGECOL LTDA., Carrera 33 No. 48–95 of. 205, Bucaramanga, Colombia; NIT # 804015530–4 (Colombia) [SDNT]

SEGUWRA DEL VALLE E.U., Avenida 11N No. 7N–201, Cali, Colombia; NIT # 805016035–8 (Colombia) [SDNT]

SEIN, Thein; DOB 20 Apr 1945; POB Pathein, Irrawaddy Division; citizen Burma; nationality Burma; Adjutant General; First Secretary, State Peace and Development Council (individual) [BURMA]

SEKERAMAYI, Lovemore; Chief Elections Officer (individual) [ZIMBABWE]

SEKERAMAYI, Sidney Tigere, 31 Honey Bear Lane, Borrowdale, Harare, Zimbabwe; DOB 30 Mar 1944; Minister of Defense (individual) [ZIMBABWE]

SEKERAMAYI, Tsitsi Chihuri, 31 Honey Bear Lane, Borrowdale, Harare, Zimbabwe; DOB circa 1944; Spouse of Sydney Sekeramayi (individual) [ZIMBABWE]

SELIMI, Rexhep; DOB 15 Mar 1971; POB Iglarevo, Serbia and Montenegro (individual) [BALKANS]

SENANQUE (vessel) [CUBA]

SENANQUE SHIPPING CO. LTD., c/o EMPRESA DE NAVEGACION CARIBE, Edificio Lonja del Comercio, Lamparilla 2, Caja Postal 1784, Havana 1, Cuba [CUBA]

SENNAR SUGAR COMPANY LIMITED, P.O. Box 511, Khartoum, Sudan; E-mail Address sukar@sudanmail.net (Sudan) [SUDAN]

SENTOSA TREASURE PTE. LTD., 3 Shenton Way, 10–01 Shenton House, Singapore 068805, Singapore [JADE] [BURMA]

SEPASAD ENGINEERING COMPANY, No. 4 Corner of Shad St., Mollasadra Ave., Vanak Square, Tehran, Iran [NPWMD]

SEPRIV, S.A. DE C.V., Calle Donato Guerra No. 649, 1, Col. Centro, Culiacan, Sinaloa, Mexico; R.F.C. SEP980319668 (Mexico) [SDNTK]

SEPULVEDA SEPULVEDA, Manuel Salvador, c/o INVHERESA S.A., Cali, Colombia; c/o INMOBILIARIA U.M.V. S.A., Cali, Colombia; c/o ALKALA ASOCIADOS S.A., Cali, Colombia; DOB 2 Feb 1956; Cedula No. 16855038 (Colombia) (individual) [SDNT]

SEPULVEDA ZAPATA, Efrain Hernan, c/o SEPULVEDA-IRAGORRI LTD., Nassau, Bahamas, The; c/o INTERNACIONAL DE DIVISAS S.A., Cali, Colombia; c/o VALORCORP S.A., Bogota, Colombia; c/o REPRESENTACIONES ZATZA LTDA., Cali, Colombia; c/o OBURSATILES S.A., Cali, Colombia; c/o INTERNACIONAL DE DIVISAS S.A., LLC, Miami, FL; DOB 21 Mar 1960; Cedula No. 16449272 (Colombia); Passport 16449272 (Colombia) (individual) [SDNT]

SEPULVEDA-IRAGORRI, INC., 4382 Fox Ridge Dr., Weston, FL 33331; Business Registration Document # P00000115667 (United States); US FEIN 65–1062397 [BPI-SDNT]

SEPULVEDA-IRAGORRI, LTD., Calle 6 Oeste No. 4–200 apt. 202, Cali, Colombia; Nassau, Bahamas, The [SDNT]

SERB DEMOCRATIC PARTY (a.k.a. SDS; a.k.a. SRPSKA DEMOKRATSKA STRANKA), Kralja Alfonsa XIII, Number 1, 78000 Banja Luka, Bosnia and Herzegovina [BALKANS]

SERCUBA (a.k.a. WWW.SERCUBA.COM), Vicente Garcia #28 e/Julian Santana y Francisco Vega, Tienda La Nueva, Las Tunas, Cuba; Calle Ayuntamiento e/Medio y Rio, Matanzas, Cuba; Calle 6 #408 esq. 3ra. Ave. Miramar Playa, La Habana, Cuba; Frexes #216 e/Maceo y Martires, Holguin, Cuba; Felix Pena #565 e/Jose A. Saco y Aguilera, Santiago de Cuba, Cuba; Calle 39 e/30 y 32 Altos del Servi Cupet ''El parque'', Isla de la Juventud, Cuba; Calle 29 #5218 e/52 y 54 Edif. Cimex, Cienfuegos, Cuba; Gral. Gomez #105 e/Maceo e Independencia, Camaguey, Cuba; Crombet s/n e/Los Maceos y Moncada, Guantanamo, Cuba; Calle 40 esq. Playa. Varadero, Matanzas, Cuba; Gerardo Medina #633, Pinar del Rio, Cuba; Independencia #171 Sur, altos, Sancti Spiritus, Cuba; Libertad s/n, e/Honorato del Castillo y Maceo, Ciego de Avila, Cuba; Edif. Las Novedades altos Ave. Frank Pais e/Segunda y Aven. Figueredo. Rpto. Jesus Menendez. Bayamo, Granma, Cuba; Ave. 1ro. De Mayo s/n. Moa, Holguin, Cuba; Carretera Central Km. 298 Banda Esperanza, Villa Clara, Cuba [CUBA]

SERNA GOMEZ, Adriana Maria, c/o DROBLAM S.A., Cali, Colombia; DOB 22 Jan 1971; Cedula No. 34600630 (Colombia); Passport 34600630 (Colombia) (individual) [SDNT]

SERNA, Maria Norby (a.k.a. SERNA DE PEREZ, Maria Norbi), c/o INVHERESA S.A., Cali, Colombia; c/o ALKALA ASOCIADOS S.A., Cali, Colombia; Carrera 30A No. 67–45, Palmira, Colombia; DOB 14 Jul 1945; Cedula No. 29475049 (Colombia) (individual) [SDNT]

SERPA DIAZ, Alvaro Alfonso (a.k.a. CERPA DIAZ, Alvaro Alfonso; a.k.a. CERPA DIAZ, Tiberio Antonio; a.k.a. SERPA DIAZ, Alvaro Enrique; a.k.a. ''FELIPE RINCON''); DOB 28 Mar 1959; alt. DOB 9 Oct 1956; POB San Jacinto, Bolivar, Colombia; alt. POB Cali, Colombia; Cedula No. 6877656 (Colombia) (individual) [SDNTK]

SERPROVIS S.A. SERVICIOS Y PROVISIONES, Calle 28N No. 6BN–54, Cali, Colombia; NIT # 900023730–2 (Colombia) [SDNT]

SERRANO PONCE, Jose Delio, c/o DISMERCOOP, Cali, Colombia; DOB 13 Apr 1965; Cedula No. 16711205 (Colombia) (individual) [SDNT]

SERRANO SILVA, Luz Esperanza, c/o MAGEN LTDA., Bogota, Colombia; Cedula No. 51822684 (Colombia); Passport 51822684 (Colombia) (individual) [SDNT]

SERVIAUTOS UNO A 1A LIMITADA (a.k.a. DIAGNOSTICENTRO LA GARANTIA), Carrera 15 No. 44–68, Cali, Colombia; Calle 34 No. 5A–25, Cali, Colombia; NIT # 800032413–8 (Colombia) [SDNT]

SERVICIO AEREO DE SANTANDER E.U. (a.k.a. S.A.S. E.U.), Carrera 66 No. 7–31, Bogota, Colombia; NIT # 800543219–8 (Colombia) [SDNT]

SERVICIOS ADMINISTRATIVOS Y DE ORGANIZACION, S.C., Tijuana, Baja California, Mexico [SDNTK]

SERVICIOS DE LA SABANA E.U. (a.k.a. SERBANA E.U.), Carrera 13A No. 89–38 of. 713, Bogota, Colombia; NIT # 830050331–8 (Colombia) [SDNT]

SERVICIOS FARMACEUTICOS SERVIFAR S.A. (a.k.a. SERVIFAR S.A.), Carrera 4 No. 31–96, Cali, Colombia; NIT # 805003968–8 (Colombia) [SDNT]

SERVICIOS FUTURA LIMITADA (a.k.a. SERVIFUTURA LTDA.), Carrera 70 No. 54–30, Bogota, Colombia; Carrera 28 No. 11–65 of. 712, Bogota, Colombia; Calle 12B No. 27–39, Bogota, Colombia; Carrera 28 No. 11–65 of. 416, Bogota, Colombia; NIT # 830044689–4 (Colombia) [SDNT]

SERVICIOS INMOBILIARIOS LTDA., Carrera 65 No. 13–82, Cali, Colombia; Avenida 2N No. 7N–55 of. 605, Cali, Colombia [SDNT]

SERVICIOS LOGISTICOS Y MARKETING LTDA. (a.k.a. S L M K LTDA.), Carrera 28 No. 11–65/67 of. 717 Centro Comercial Ricaurte, Bogota, Colombia; NIT # 830044689–4 (Colombia) [SDNT]

SERVICIOS MYRAL E.U., Calle 6 Oeste No. 6–38, Cali, Colombia; Calle 29 Norte No. 6N–43, Cali, Colombia; NIT # 805022419–7 (Colombia) [SDNT]

SERVICIOS SILSA S.A.C., Jr. Huantar 278, Lima, Peru; RUC # 20341067112 (Peru) [SDNTK]

SERVICIOS SOCIALES LTDA., Barranquilla, Colombia [SDNT]

SERVIMPEX, S.A., Panama [CUBA]

SERVINAVES, S.A., Panama [CUBA]

SES INTERNATIONAL CORP (a.k.a. SES AUTOMOBILE; a.k.a. SES GROUP), Harsta Hams Road, PO Box 291, Damascus, Syria; Harasta Homs Highway, PO Box 241, Damascus, Syria [IRAQ2]

SESELJ, Vojislav; DOB 11 Oct 1954; POB Sarajevo, Bosnia-Herzegovina; ICTY indictee (individual) [BALKANS]

SEVENTH OCEAN; Vessel Registration Identification IMO 9165786 (vessel) [NPWMD]

SHAAFI (a.k.a. IRAN SHAAFI); Vessel Registration Identification IMO 9386500 (vessel) [NPWMD]

SHABAN, Adib (a.k.a. AL-ANI, Adib Shaban; a.k.a. SHABAN, Dr. Adib); DOB 1952; nationality Iraq (individual) [IRAQ2]

SHAHBANDAR, Samira (a.k.a. CHADIAN); DOB 1946; POB Baghdad, Iraq; nationality Iraq; wife of Saddam Hussein al-Tikriti (individual) [IRAQ2]

SHAHBAZ KHAN GENERAL TRADING LLC (a.k.a. AL SHAHBOZ KHAN GENERAL TRADING LLC.), P.O. Box 40754, Dubai, United Arab Emirates; Al Ghas Building, Baniyas Square, Al Rigga Area, Flat No. 106, Dubai, United Arab Emirates; Shop No. 16, Baniyas Centre, Dubai, United Arab Emirates; P.O. Box 24241, Dubai, United Arab Emirates; C.R. No. 52060 (United Arab Emirates) [SDNTK]

SHAHBAZ TV CENTER, Shop No. 1–2, Block A, Jamrud Road, Royal Market, Peshawar, Pakistan [SDNTK]
SHAHID BAKERI INDUSTRIAL GROUP (a.k.a. ''SBIG''), Tehran, Iran [NPWMD]
SHAHID HEMMAT INDUSTRIAL GROUP (a.k.a. ''SHIG''), Damavand Tehran Highway, Tehran, Iran [NPWMD]
SHAHID SATTARI INDUSTRIES, Southeast Tehran, Iran [NPWMD]
SHAHID SAYYADE SHIRAZI INDUSTRIES (a.k.a. SHAHID SAYYAD SHIRAZI INDUSTRIES; a.k.a. SHAHID SAYYED SHIRAZI IND.), Babaei Highway—Next to Niru M.F.G, Tehran, Iran; Pasdaran St., P.O. Box 16765, Tehran 1835, Iran; Next To Nirou Battery Mfg. Co, Shahid Babaii Expressway, Nobonyad Square, Tehran, Iran [NPWMD]
SHAHLAI, Abdul Reza (a.k.a. SHAHLAEE, Abdul-Reza; a.k.a. SHAHLAI, Abdol Reza; a.k.a. SHAHLA'I, Abdolreza; a.k.a. SHAHLAI, 'Abdorreza; a.k.a. SHALAI, 'Abd-al Reza; a.k.a. SHALA'I, Abdul Reza; a.k.a. ''ABU-AL-KARKH', 'Yusuf''; a.k.a. ''YASIR, Hajji''; a.k.a. ''YUSEF, Hajj''; a.k.a. ''YUSIF, Haji''; a.k.a. ''YUSIF, Hajji''), Kermanshah, Iran; Mehran Military Base, Ilam Province, Iran; DOB circa 1957 (individual) [IRAQ3]
SHAHNAWAZ TRADERS, Shop No. 1–2, Block A, Jamrud Road, Royal Market, Peshawar, Pakistan [SDNTK]
SHALABI, Ismail Abdallah Sbaitan, Wilhelm-Strasse 45, 59269, Beckum, Germany; DOB 30 Apr 1973; POB Beckum, Germany; nationality Jordan; nationality possibly Palestinian;arrested 23 Apr 2002 (individual) [SDGT]
SHALISH, Asif (a.k.a. AL-SHALISH, Dr. Asef; a.k.a. ISSA, Assef; a.k.a. SHALEESH, Asef Isa; a.k.a. SHALEESH, Dr. Assef Essa), Damascus, Syria; DOB 1 Jan 1959; nationality Syria; Passport 4713277 (Syria) (individual) [IRAQ2]
SHALISH, Zuhayr (a.k.a. AL-HEMMEH, Thu; a.k.a. AL-SHALISH, Dhu Al-Himma; a.k.a. SHALEESH, Dhu Himma; a.k.a. SHALEESH, Thu Al Hima; a.k.a. SHALISH, Dhu Al Himma; a.k.a. SHALISH, Dhuil Himma; a.k.a. SHALISH, Zuhilma), Damascus, Syria; DOB circa 1956; POB Al-Ladhiqiyah, Syria; nationality Syria; General; Has a military position-is known also as Major General or Brigadier General. (individual) [IRAQ2]
SHAMU, Webster Kotiwani, 1 Uplands Close, Highlands, Zimbabwe; DOB 6 Jun 1945; Passport AN203141 (Zimbabwe) expires 15 Jan 2011; Minister of Policy Implementation (individual) [ZIMBABWE]
SHAMUYARIRA, Nathan Marwirakuwa; DOB 29 Sept 1928; Passport AD000468 (Zimbabwe); Politburo Secretary for Information and Publicity (individual) [ZIMBABWE]
SHANT, Adam Yacub (a.k.a. ''SHARIF, Adam Yacub''; a.k.a. ''YACOUB, Adam''); DOB circa 1976; Commander for the Sudan Liberation Army (SLA) (individual) [DARFUR]
SHAQAQI, Fathi; Secretary General of PALESTINIAN ISLAMIC JIHAD-SHIQAQI (individual) [SDT]
SHAQIRI, Shaqir; DOB 1 Sep 1964; POB Serbia and Montenegro (individual) [BALKANS]
SHAQIRI, Xhezair; DOB 15 May 1965; POB Tanusevci, Macedonia (individual) [BALKANS]
SHARPER S.A., Calle 12B No. 28–58, Bogota, Colombia; Calle 16 No. 28A-57, Bogota, Colombia; Calle 12B No. 28–70, Bogota, Colombia; Calle 16 No. 28A–42, Bogota, Colombia; Calle 17A No. 28A–43, Bogota, Colombia; NIT # 830026833–2 (Colombia) [SDNT]
SHARVET S.A., Calle 12B No. 28–70, Bogota, Colombia; NIT # 830050743–9 (Colombia) [SDNT]
SHAW, Emmanuel (II); DOB 26 JUL 1946; alt. DOB 26 JUL 1956; alt. DOB 29 JUL 1956; Advisor to former President of Liberia Charles Taylor (individual) [LIBERIA]
SHAWEESH, Yasser Abu (a.k.a. ABOU SHAWEESH, Yasser Mohamed; a.k.a. ABU SHAWEESH, Yasser Mohamed Ismail), Meckennheimer Str. 74a, Bonn 53179, Germany; Wuppertal Prison, Germany; DOB 20 Nov 1973; POB Benghazi, Libya; Passport 981358 (Egypt); alt. Passport 0003213 (Egypt); Travel Document Number C00071659 (Germany); alt. Travel Document Number 939254 (Egypt) (individual) [SDGT]
SHAWKAT, Assef, Al-Akkad Street, Damascus, Syria; DOB 1950; POB Tartus, Syria; nationality Syria; Director of Syrian Military Intelligence (individual) [SYRIA]
SHEIKAN INSURANCE AND REINSURANCE COMPANY LIMITED (a.k.a. SHEIKAN INSURANCE COMPANY), Al Souq Al Arabi, Sheikan Building, Khartoum SU001, P.O. Box 10037, Khartoum, Sudan; E-mail Address sheikan@sudanmail.net (Sudan) [SUDAN]
SHEIMAN, Viktar Uladzimiravich (a.k.a. SHEIMAN, Victor Uladzimiravich; a.k.a. SHEIMAN, Victor Vladimirovich; a.k.a. SHEIMAN, Viktar Vladimirovich; a.k.a. SHEIMAN, Viktor Uladzimiravich; a.k.a. SHEIMAN, Viktor Vladimirovich; a.k.a. SHEYMAN, Victor Uladzimiravich; a.k.a. SHEYMAN, Victor Vladimirovich; a.k.a. SHEYMAN, Viktar Uladzimiravich; a.k.a. SHEYMAN, Viktar Vladimirovich; a.k.a. SHEYMAN, Viktor Uladzimiravich; a.k.a. SHEYMAN, Viktor Vladimirovich); DOB 26 May 1958; POB Soltanishka, Voronovskovo, Belarus; alt. POB Grodno, Belarus; State Secretary of the Security Council; former Prosecutor General (individual) [BELARUS]
SHER MATCH INDUSTRIES (PVT.) LIMITED, Plot Numbers 119–121, Industrial Estate, Jamrud Road, Hayatabad, Peshawar, Pakistan; Shahnawaz Traders Royal Industrial Area, Jamrud Road, Peshawar, Pakistan; C.R. No. P-01876/ 19981106 (Pakistan) [SDNTK]
SHEREIK MICA MINES COMPANY, C/O SUDANESE MINING CORPORATION (a.k.a. SHERIEK MICA PROJECT, c/o SUDANESE MINING CORPORATION), P.O. Box 1034, Khartoum, Sudan [SUDAN]
SHIH, Kuo Neng (a.k.a. KUAI NUENG, Sae Chang; a.k.a. ''AH SAN''; a.k.a. ''SHI KWAN NEINK''; a.k.a. ''SHIH KUO NENG''), Tachilek, Shan, Burma; DOB 1964 (individual) [SDNTK]
SHIHATA, Thirwat Salah (a.k.a. ABDALLAH, Tarwat Salah; a.k.a. THIRWAT, Salah Shihata; a.k.a. THIRWAT, Shahata); DOB 29 Jun 1960; POB Egypt (individual) [SDGT]
SHINING PATH (a.k.a. EGP; a.k.a. EJERCITO GUERRILLERO POPULAR (PEOPLE'S GUERRILLA ARMY); a.k.a. EJERCITO POPULAR DE LIBERACION (PEOPLE'S LIBERATION ARMY); a.k.a. EPL; a.k.a. PARTIDO COMUNISTA DEL PERU (COMMUNIST PARTY OF PERU); a.k.a. PARTIDO COMUNISTA DEL PERU EN EL SENDERO LUMINOSO DE JOSE CARLOS MARIATEGUI (COMMUNIST PARTY OF PERU ON THE SHINING PATH OF JOSE CARLOS MARIATEGUI); a.k.a. PCP; a.k.a. SENDERO LUMINOSO; a.k.a. SL; a.k.a. SOCORRO POPULAR DEL PERU (PEOPLE'S AID OF PERU); a.k.a. SPP) [FTO] [SDGT]
SHIPLEY SHIPPING CORP., Panama [CUBA]
SHIPPING COMPUTER SERVICES COMPANY (a.k.a. SCSCO), No. 37, Asseman, Shahid Sayyad Shirazeesq, Pasdaran Ave., P.O. Box 1587553–1351, Tehran, Iran; No. 13, 1st Floor, Abgan Alley, Aban Ave., Karimkhan Zand Blvd., Tehran 15976, Iran [NPWMD]
SHIRAZ ELECTRONICS INDUSTRIES (a.k.a. SEI; a.k.a. SHIRAZ ELECTRONIC INDUSTRIES), Hossain Abad Road, Shiraz, Iran; P.O. Box 71365–1589, Shiraz, Iran [NPWMD]
SHIRI, Perence; DOB 11 Jan 1955; Zimbabwean Air Marshal (Air Force) (individual) [ZIMBABWE]
SHOMAL CEMENT COMPANY, Dr Beheshti Ave., No 289, Tehran 151446, Iran; 289 Shahid Beheshti Ave., P.O. Box 15146, Tehran, Iran [NPWMD]
SHUEN WAI HOLDING LIMITED, Room 3605 36/F Wu Chang House, 213 Queen's Road E, Wan Chai, Hong Kong, Hong Kong; Business Registration Document # 15895496 (Hong Kong); Certificate of Incorporation Number 330330 (Hong Kong) [SDNTK]
SHUMBA, Isaiah Masvayamwanda; DOB 3 Jan 1949; Deputy Minister of Education, Sports and Culture (individual) [ZIMBABWE]
SHWE, Khin (a.k.a. SHWE, Khin, Dr.), Burma; DOB 21 Jan 1952; citizen Burma; nationality Burma; President, Zay Gabar Company (individual) [BURMA]
SHWE, Than; DOB 2 Feb 1935; alt. DOB 2 Feb 1933; citizen Burma; nationality Burma; Senior General, Minister of Defense and Commander-in-Chief of Defense Services; Chairman, State Peace and Development Council (individual) [BURMA]
SIAM NICE COMPANY LTD., 273 Soi Thiam Ruammit, Ratchada Phisek Road, Huai Khwang district, Bangkok, Thailand [SDNTK]
SIBANDA, Levy; Deputy Police Commissioner (individual) [ZIMBABWE]
SIBONEY INTERNACIONAL, S.A., Edificio Balmoral, 82 Via Argentina, Panama City, Panama [CUBA]
SIBONEY INTERNACIONAL, S.A., Venezuela [CUBA]
SIEIRO DE NORIEGA, Felicidad, Panama (individual) [CUBA]
SIERRA RAMIREZ, Juan Carlos; DOB 15 Apr 1966; Cedula No. 71680143 (Colombia) (individual) [SDNTK]

SIKIRICA, Dusko; DOB 23 Mar 1964; POB Cirkin Pojle, Bosnia-Herzegovina; ICTY indictee (individual) [BALKANS]
SIKOSANA, Absolom; Politburo Secretary for Youth Affairs (individual) [ZIMBABWE]
SILOS AND STORAGE CORPORATION, P.O. Box 1183, Khartoum, Sudan [SUDAN]
SIMAN DE JAAR, Carmen Elena (a.k.a. JAAR, Carmen E.; a.k.a. S DE JAAR, Carmen Elena; a.k.a. SIMAN DADA DE JAAR, Carmen Elena), 325 Poinciana Island Drive, Sunny Island Beach, FL 33160; c/o ARMANDO JAAR Y CIA. S.C.S., Barranquilla, Colombia; c/o CIPE INVESTMENTS CORPORATION, Panama City, Panama; DOB 01 Nov 1953; Cedula No. 1629942 (El Salvador); Passport B296684 (El Salvador) (individual) [SDNT]
SIMATOVIC, Franko 'Frenki'; DOB 1 Apr 1950; POB Belgrade, Serbia and Montenegro,; ICTY indictee in Serb custody (individual) [BALKANS]
SIMIC, Blagoje; DOB 1 Jul 1960; POB Kruskovo Polje; ICTY indictee in custody (individual) [BALKANS]
SIMIC, Milan; DOB 9 Aug 1960; POB Sarajevo, Bosnia-Herzegovina; ICTY indictee (individual) [BALKANS]
SINALOA CARTEL (a.k.a. ''ALLIANCE''; a.k.a. ''FEDERATION''), Mexico [SDNTK]
SININ; Vessel Registration Identification IMO 9274941 (vessel) [NPWMD]
SIN-MEX IMPORTADORA, S.A. DE C.V. (a.k.a. CHIKA'S; a.k.a. CHIKA'S ACCESORIOS Y COSMETICOS; a.k.a. IMPORTCLUB), Plaza Fantasia, Calle del Carmen No. 82 Local 28, Distrito Federal, Mexico; Rubi No. 366-A, Col. Centro, Culiacan, Sinaloa, Mexico; Plaza Coliseo Local 11, Col. Centro, Leon, Guanajuato, Mexico; Magno Centro Joyero Sn. Juan de Dios Local 1038, Guadalajara, Jalisco, Mexico; Poniente 140 No. 639, Col. Industrial Vallejo, Mexico, Distrito Federal, Mexico; Parras 1750 Int. C, Col. Alamo Oriente, Tlaquepaque, Jalisco, Mexico; Ignacio Lopez Rayon No. 9104, Col. 1 de Mayo, Toluca, Mexico; Centro Joyero Local 21 y 25, Andador Allende No. 116 Oriente, Aguascalientes, Ags., Mexico; Galerias San Miguel Local 40 K, Culiacan, Sinaloa, Mexico; Plaza Centro Sur Local I–9, Guadalajara, Jalisco, Mexico; Plaza Centro Sur Local D–11, Guadalajara, Jalisco, Mexico; Centro Joyero Local 31, Culiacan, Sinaloa, Mexico; Avenida Rayon 140 D, Col. Colonia Toluca de Lerdo Centro, Toluca, Estado de Mexico 50000, Mexico; Plaza de la Mujer Local 27, Morelos No. 133 Poniente, Monterrey, Nuevo Leon, Mexico; Av. Javier Mina No. 26, Col. San Juan de Dios, Guadalajara, Jalisco, Mexico; Alvaro Obregon No. 614, Col. San Juan de Dios, Guadalajara, Jalisco, Mexico; Centro Joyero de Toluca Local 8, Benito Juarez No. 109, Toluca, Estado Mexico, Mexico; Pedro Loza No. 174, Col. Centro, Guadalajara, Jalisco, Mexico; Av. Juarez No. 496, Col. Centro, Guadalajara, Jalisco, Mexico; Avenida Rayon 104, Col. Colonia Toluca de Lerdo Centro, Toluca, Estado de Mexico 50000, Mexico; Ignacio Lopez Rayon, Col. 5 de Mayo, Toluca, Mexico; Poniente 140 No. 639, Col. Industrial Vallejo, Delegacion Azcapotzalco, Distrito Federal, Mexico; Plaza Galerias Local 22, Col. Colinas de San Miguel, Culiacan, Sinaloa, Mexico; Riva Palacio No. 675 Sur, Col. Almada, Culiacan, Sinaloa, Mexico; Reforma 217-A, Col. Centro, Leon, Guanajuato, Mexico; R.F.C. SMI010730DH8 (Mexico) [SDNTK]
SIREGAR, Parlindungan (a.k.a. SIREGAR, Parlin; a.k.a. SIREGAR, Saleh Parlindungan); DOB 25 Apr 1957; alt. DOB 25 Apr 1967; POB Indonesia; nationality Indonesia (individual) [SDGT]
SISON, Jose Maria (a.k.a. LIWINAG, Armando), Netherlands; DOB 8 Feb 1938; POB Llocos Sur Northern Luzon, Philippines (individual) [SDGT]
SISTEMA DE DISTRIBUCION MUNDIAL, S.A.C. (a.k.a. WORLD DISTRIBUTION SYSTEM), Avenida Jose Pardo No. 601, Piso 11, Lima, Peru; RUC # 20458382779 (Peru) [SDNTK]
SISTEMA DE RADIO DE SINALOA, S.A. DE C.V., Cll Cristobal Colon No. 275, Col. Centro, Culiacan, Sinaloa 80000, Mexico; Calle Francisco Villa No. 331, Col. Centro, Culiacan, Sinaloa, Mexico; Centro Culiacan Ramon Corona Jesus Andrade, Culiacan Rosales, Culiacan, Mexico; Cll Cristobal Colon 275, Culiacan Rosales, Culiacan, Mexico; (Clave Catastral CU–37–740–003) Lote 3, Manzana #18, Zona 1, ''El Vallado III'', Culiacan, Sinaloa, Mexico; R.F.C. SRS9903153C5 (Mexico) [SDNTK]
SISTEMAS INTEGRALES DEL VALLE LTDA. (a.k.a. SISVA LTDA.), Avenida 4 Norte No. 6N–67 of. 610, Cali, Colombia; NIT # 805006032–3 (Colombia) [SDNT]
SISTEMAS Y SERVICIOS TECNICOS EMPRESA UNIPERSONAL (a.k.a. SISETEC), Calle 29 Norte No. 6N–43, Cali, Colombia; NIT # 805013420–7 (Colombia) [SDNT]
SIVAKOV, Yury; DOB 5 Aug 1946; POB Onory, Kirov district, Belarus; citizen Belarus; nationality Belarus; former Minister of Sport and Tourism; former Minister of the Interior (individual) [BELARUS]
SIXTH OCEAN; Vessel Registration Identification IMO 9349679 (vessel) [NPWMD]
SLEWA, Roodi (a.k.a. SALIWA, Rudi; a.k.a. SLAIWAH, Rudi; a.k.a. SLAY WAH, Rudi Untaywan); nationality Iraq (individual) [IRAQ2]
SLIZHEVSKY, Oleg Leonidovich (a.k.a. SLIZHEUSKI, Aleh Leanidavich; a.k.a. SLIZHEVSKI, Oleg Leonidovich); citizen Belarus; nationality Belarus; Head of the Public Associations Department, Ministry of Justice (individual) [BELARUS]
SLJIVANCANIN, Veselin; DOB 13 Jun 1953; POB Zabljak, Serbia and Montenegro; ICTY indictee at large (individual) [BALKANS]
SMITH CORTES, Jorge Emilio, c/o MAPRI DE COLOMBIA LTDA., Bogota, Colombia; Cedula No. 19323175 (Colombia); Passport 19323175 (Colombia) (individual) [SDNT]
SNIPER AFRICA (a.k.a. SNIPER OUTDOOR CC; a.k.a. SNIPER OUTDOORS CC; a.k.a. TRUE MOTIVES 1236 CC), 40 Mint Road, Amoka Gardens, Fordsburg, Johannesburg, South Africa; P.O. Box 42928, Fordsburg 2003, South Africa; 16 Gold Street, Carletonville 2500, South Africa; P.O. Box 28215, Kensington 2101, South Africa; Registration ID 200302847123; Tax ID No. 9113562152; Website www.sniperafrica.com [SDGT]
SOCIEDAD COMERCIAL Y DEPORTIVA LTDA., Carrera 34 Diag. 29–86 Estadio Pascual Guerrero, Cali, Colombia; Carrera 34 Diagonal 29 Estadio, Cali, Colombia; Carrera 34 Diag. 29–05, Cali, Colombia; NIT # 800141329–4 (Colombia) [SDNT]
SOCIEDAD CONSTRUCTORA Y ADMINISTRADORA DEL VALLE LTDA. (a.k.a. SOCOVALLE LTDA.), Avenida 2N No. 7N–55 of. 601–602, Cali, Colombia [SDNT]
SOCIEDAD DE COMERCIALIZACION INTERNACIONAL POSEIDON S.A. (f.k.a. C.I. COMERCIALIZADORA INTERNACIONAL POSEIDON S.A.; a.k.a. C.I. POSEIDON S.A.), Calle 79 Sur No. 48B–56, Sabaneta, Antioquia, Colombia; NIT # 800173090–7 (Colombia) [SDNTK]
SOCIEDAD DE NEGOCIOS SAN AGUSTIN LTDA., Factoria La Rivera, La Union, Valle, Colombia; NIT # 800042932–1 (Colombia) [SDNT]
SOCIEDAD INVERSORA EN PROYECTOS DE INTERNET, S.A., Calle Segre 25, 28002 Madrid, Spain [SDNT]
SOCIEDAD MINERA GRIFOS S.A., Carrera 43 No. 1A Sur-29, Medellin, Colombia; Avenida Rodrigo Mira Calle 53 Cras. 49 y 45, El Bagre, Antioquia, Colombia; NIT # 811033869–7 (Colombia) [SDNT]
SOCIEDAD SUPERDEPORTES LTDA., Carrera 10 No. 93A–29, Bogota, Colombia; NIT # 8009712337 (Colombia) [SDNT]
SOCIETA COMMERCIA MINERALI E METTALLI, SRL (a.k.a. SOCOMET, SPA), Milan, Italy [CUBA]
SOE, Myint Myint (a.k.a. SOE, Daw Myint Myint); DOB 15 Jan 1953; wife of Nyan Win (individual) [BURMA]
SOLAQUE SANCHEZ, Alfredo Alfonso, c/o ALFA PHARMA S.A., Bogota, Colombia; c/o PENTA PHARMA DE COLOMBIA S.A., Bogota, Colombia; c/o LABORATORIOS KRESSFOR DE COLOMBIA S.A., Bogota, Colombia; c/o PENTACOOP LTDA., Bogota, Colombia; c/o LABORATORIOS BLAIMAR DE COLOMBIA S.A., Bogota, Colombia; c/o DISTRIBUIDORA DE DROGAS CONDOR LTDA., Bogota, Colombia; DOB 18 Dec 1962; Cedula No. 79261845 (Colombia) (individual) [SDNT]
SOLEIMANI, Qasem (a.k.a. SALIMANI, Qasem; a.k.a. SOLAIMANI, Qasem; a.k.a. SOLEMANI, Qasem; a.k.a. SOLEYMANI, Ghasem; a.k.a. SOLEYMANI, Qasem; a.k.a. SULAIMANI, Qasem; a.k.a. SULAYMAN, Qasmi; a.k.a. SULEMANI, Qasem); DOB 11 Mar 1957; POB Qom, Iran; citizen Iran; nationality Iran; Diplomatic Passport 008827 (Iran) issued 1999 (individual) [NPWMD]
SOLIS HERNANDEZ, Damaris, c/o CAJA SOLIDARIA, Bogota, Colombia; c/o COOMULCOSTA, Barranquilla, Colombia; c/o COPSERVIR LTDA., Bogota, Colombia; Cedula No. 32669869 (Colombia) (individual) [SDNT]
SOLUCIONES COOPERATIVAS, Calle 70 Sur No. 83–88, Bogota, Colombia; Carrera 32 No. 25–71, Bogota, Colombia; Calle 15 No. 4–43 of. 250, Cali, Colombia; NIT # 830118975–5 (Colombia) [SDNT]
SOMALI INTERNATIONAL RELIEF ORGANIZATION, 1806 Riverside Ave., 2nd Floor, Minneapolis, MN [SDGT]
SOMALI INTERNET COMPANY, Mogadishu, Somalia [SDGT]

SOMALI NETWORK AB (a.k.a. SOM NET AB), Hallbybacken 15, Spanga 70, Sweden [SDGT]
SONAR F.M. E.U. DIETER MURRLE (a.k.a. FIESTA STEREO 91.5 F.M.; a.k.a. PRISMA STEREO 89.5 F.M), Calle 43A No. 1–29 Urb. Sta. Maria del Palmar, Palmira, Colombia; Calle 15 Norte No. 6N–34 of. 1003, Cali, Colombia; NIT # 805006273–1 (Colombia) [SDNT]
SONAR F.M. S.A. (f.k.a. COLOR STEREO S.A.; f.k.a. COLOR'S S.A.; f.k.a. RADIO UNIDAS FM S.A.), Calle 15 Norte No. 6N–34 piso 15 Edificio Alcazar, Cali, Colombia; Calle 19N No. 2N–29 piso 10 Sur, Cali, Colombia; NIT # 800163602–5 (Colombia) [SDNT]
SOPTA, Stanko; DOB 4 Feb 1966; POB Duzice, Bosnia-Herzegovina (individual) [BALKANS]
SORAYA Y HAYDEE LTDA., Calle 15 Norte No. 6N–34, Piso 15, Cali, Colombia; NIT # 805000643–6 (Colombia) [SDNT]
SOTO GIL, Yolanda Esthela, c/o FORPRES, S.C., Tijuana, Baja California, Mexico; Padre Mayorga No. 106, Fraccionamiento Las Californias, Tijuana, Baja California, Mexico; c/o DISTRIBUIDORA IMPERIAL DE BAJA CALIFORNIA, S.A. DE C.V., Av. Rio Nazas 1202, Col. Revolucion, Tijuana, Baja California CP 22400, Mexico; DOB 5 Aug 1950; POB Tijuana, Baja California, Mexico; C.U.R.P. SOGY500805MBCTLL15 (Mexico) (individual) [SDNTK]
SOTO GUTIERREZ, Hernan, c/o INVERSIONES ARIO LTDA, Cali, Colombia; Carrera 24E No. 4–116 Oeste, Cali, Colombia; Cedula No. 6079597 (Colombia) (individual) [SDNT]
SOTO PACHECO, Jhonayn, c/o FARMEDIS LTDA., Bogota, Colombia; Cedula No. 7691290 (Colombia) (individual) [SDNT]
SOTO VEGA, Ivonne (a.k.a. SOTO DE GOMEZ, Ivonne; a.k.a. SOTO VEGA DE GOMEZ, Ivonne; a.k.a. ''LA PANTERA''), Ave. Las Conchas 643, Colonia Playas de Tijuana Secc. Coronado, Tijuana, Baja California CP 22200, Mexico; Pso. Centenario 9971, Colonia Zona Urbana Rio Tijuana, Tijuana, Baja California CP 22320, Mexico; c/o MULTISERVICIOS SIGLO, S.A. DE C.V., Tijuana, Baja California, Mexico; DOB 22 Oct 1953; alt. DOB 25 Oct 1953; POB Tijuana, Baja California, Mexico; R.F.C. SOVI-531022-QIA (Mexico) (individual) [SDNTK]
SOUTH ISLAND SHIPPING CO. LTD., c/o EMPRESA DE NAVEGACION MAMBISA, Apartado 543, San Ignacio 104, Havana, Cuba [CUBA]
SOUTH ISLANDS (vessel) [CUBA]
SOUTH SHIPPING LINE IRAN (a.k.a. SOUTH SHIPPING LINES IRAN COMPANY), Apt. No. 7, 3rd Floor, No. 2, 4th Alley, Gandi Ave., Tehran, Iran; Qaem Magham Farahani St., Tehran, Iran [NPWMD]
SOUTHBOUND LTD., P.O. Box 398, Suite 52 and 553 Monrovia House, 26 Main Street, Gibraltar, United Kingdom [LIBERIA]
SPASOJEVIC, Dragon, Bosnia and Herzegovina; DOB 5 Jul 1965; National ID No. 050 796 318 3954 (individual) [BALKANS]
SPECKMAN, Jeanine, United Kingdom (individual) [IRAQ2]
SPINNING AND WEAVING CORPORATION, P.O. Box 795, Khartoum, Sudan [SUDAN]
SPITIA VALENCIA LTDA., Calle 9 No. 44–59, Cali, Colombia; NIT # 805006598–1 (Colombia) [SDNT]
SPRING SP FARM, Mashvingo, Zimbabwe [ZIMBABWE]
SRC (a.k.a. SUDAN RAILWAYS CORPORATION), Port Sudan, Sudan; Kosti, Sudan; Khartoum, Sudan; P.O. Box 43, Bara, Sudan; Babanousa, Sudan [SUDAN]
SRDC (a.k.a. SUDAN RURAL DEVELOPMENT COMPANY LIMITED), P.O. Box 2190, Khartoum, Sudan [SUDAN]
STAKIC, Milomir; DOB 19 Jun 1962; POB Maricka, Bosnia-Herzegovina; ICTY indictee (individual) [BALKANS]
STANDWEAR (vessel) [CUBA]
STANDWEAR SHIPPING CO. LTD., c/o EMPRESA DE NAVEGACION MAMBISA, Apartado 543, San Ignacio 104, Havana, Cuba [CUBA]
STANISIC, Jovica; DOB 30 Jul 1950; POB Ratkovo, Serbia and Montenegro; ICTY indictee in Serb custody (individual) [BALKANS]
STANKOVIC, Radovan; DOB 10 Mar 1953; POB Trebica, Bosnia-Herzegovina; ICTY indictee in custody (individual) [BALKANS]
STAR 1 (vessel) [CUBA]
STATE CORPORATION FOR CINEMA, P.O. Box 6028, Khartoum, Sudan [SUDAN]
STATE PEACE AND DEVELOPMENT COUNCIL OF BURMA [BURMA]
STATE TRADING COMPANY (a.k.a. STATE TRADING CORPORATION), P.O. Box 211, Khartoum, Sudan [SUDAN]
STEIGER, Jakob, c/o KOHAS AG, Fribourg, FR, Switzerland; DOB 27 Apr 1941; POB Altstatten, SG, Switzerland (individual) [NPWMD]
STEPANOVIC, Novak; DOB 25 Apr 1966; POB Srebrenica, Bosnia-Herzegovina (individual) [BALKANS]
STERN, Alfred Kaufman, Prague, Czech Republic (individual) [CUBA]
STICHTING AL-AQSA (a.k.a. AL-AQSA ASBL; a.k.a. AL-AQSA CHARITABLE FOUNDATION; a.k.a. AL-AQSA CHARITABLE ORGANIZATION; a.k.a. AL-AQSA E.V.; a.k.a. AL-AQSA FOUNDATION; a.k.a. AL-AQSA INTERNATIONAL FOUNDATION; a.k.a. AL-AQSA ISLAMIC CHARITABLE SOCIETY; a.k.a. AL-AQSA SINABIL ESTABLISHMENT; a.k.a. AL-AQSA SPANM I STIFTELSE; a.k.a. AL-AQSA SPANMAL STIFTELSE; a.k.a. AQSSA SOCIETY; a.k.a. AQSSA SOCIETY YEMEN; a.k.a. CHARITABLE AL-AQSA ESTABLISHMENT; a.k.a. CHARITABLE SOCIETY TO HELP THE NOBLE AL-AQSA; a.k.a. FORENINGEN AL-AQSA; a.k.a. ISLAMIC CHARITABLE SOCIETY FOR AL-AQSA; a.k.a. MU' ASA AL-AQSA AL-KHAYRIYYA; a.k.a. MU' ASSA SANABIL AL-AQSA AL-KHAYRIYYA; a.k.a. NUSRAT AL-AQSA AL-SHARIF; a.k.a. SANABIL AL-AQSA CHARITABLE FOUNDATION; a.k.a. SWEDISH CHARITABLE AQSA EST.), Gerrit V/D Lindestraat 103 A, 3022 TH, Rotterdam, Netherlands; Gerrit V/D Lindestraat 103 E, 03022 TH, Rotterdam, Netherlands [SDGT]
STICHTING BENEVOLENCE INTERNATIONAL NEDERLAND (a.k.a. BENEVOLENCE INTERNATIONAL NEDERLAND; a.k.a. STG.BENEVOLENCE INTERNATIONAL NEDERLAND), Radeborg 14 B, 6228CV Maastricht, Netherlands; Postbus 1149, 6201BC Maastricht, Netherlands; Registration ID 14063277 [SDGT]
STRONG LINK DE MEXICO, S.A. DE C.V., Flores Magon 8013, Esquina Ninos Heroes, Zona Central, Tijuana, Baja California, Mexico; Avenida C. Flores Magon 8013, Aquiles Serdan y Reforma, Tijuana Centro, Tijuana, Baja California, Mexico; R.F.C. SLM–020812–2F4 (Mexico) [SDNTK]
STRUGAR, Pavle; DOB 13 Jul 1933; POB Pec, Serbia and Montenegro; ICTY indictee (individual) [BALKANS]
SU SERVICIO SOCIEDAD LTDA., Calle 67 No. 47–03, Cartagena, Colombia; Calle 76 No. 45–19 Local 1B, Barranquilla, Colombia; Calle 50 No. 41–84, Barranquilla, Colombia; NIT # 802021041–1 (Colombia) [SDNT]
SU, Lu-Chi (a.k.a. TSAI SU, Lu-Chi), C/O GLOBAL INTERFACE COMPANY INC., Taipei, Taiwan; C/O TRANS MERITS CO. LTD., Taipei, Taiwan; DOB 7 Feb 1950; alt. DOB Nov 1950; POB Yun Lin Hsien, Taiwan; Passport 210215095 (Taiwan); Corporate Officer (individual) [NPWMD]
SUAREZ BERNAL, Myriam, c/o FARMA XXI LTDA., Neiva, Huila, Colombia; DOB 2 Nov 1970; Cedula No. 35414723 (Colombia); Passport 35414723 (Colombia) (individual) [SDNT]
SUAREZ RIANO, Adela, c/o VILLARO LTDA., Bogota, Colombia; Cedula No. 39646144 (Colombia) (individual) [SDNT]
SUBDIVISION 3 OF CALEDON FARM, Caledon, Zimbabwe [ZIMBABWE]
SUBOTIC, Bogdan; DOB 25 Apr 1941; POB Bosanska Gradiska, Bosnia-Herzegovina (individual) [BALKANS]
SUDAN ADVANCED RAILWAYS, Khartoum, Sudan [SUDAN]
SUDAN AIR (a.k.a. SUDAN AIRWAYS), Kuwait; Nigeria; Saudi Arabia; Uganda; United Arab Emirates; Egypt; Ethiopia; Kenya; Greece; P.O. Box 253, Khartoum, Sudan; Italy; Germany; United Kingdom; 199 Atlantic Avenue, Brooklyn, NY 11201–5606; Chad; 211 East 43rd Street, New York, NY 10017; Bahrain [SUDAN]
SUDAN COTTON COMPANY, Khartoum, Sudan [SUDAN]
SUDAN COTTON COMPANY LIMITED, P.O. Box 1672, Khartoum, Sudan [SUDAN]
SUDAN DEVELOPMENT CORPORATION, Street 21, P.O. Box 710, Khartoum, Sudan [SUDAN]
SUDAN EXHIBITION AND FAIRS CORPORATION, P.O. Box 2366, Khartoum, Sudan [SUDAN]
SUDAN GEZIRA BOARD (a.k.a. GEZIRA SCHEME), Khartum Gezira Scheme Building, 39th Street, P.O. Box 884, Khartoum, Sudan [SUDAN]
SUDAN MASTER TECHNOLOGY (a.k.a. GIAD INDUSTRIAL CITY; a.k.a. GIAD INDUSTRIAL GROUP; a.k.a. SUDAN MASTER TECH), SMT Building, Gamhuria Street, GIAD Industrial Complex, P.O. Box 10782, Khartoum, SU001, Sudan; E-mail Address info@sudanmaster.com (Sudan); Website www.sudanmaster.com (Sudan) [SUDAN]

SUDAN NATIONAL BROADCASTING CORPORATION (a.k.a. SUDAN RADIO & TV CORP.; a.k.a. SUDAN T.V. CORPORATION), P.O. Box 1094, Omdurman, Sudan [SUDAN]
SUDAN OIL CORPORATION, P.O. Box 2, Khartoum North, Sudan [SUDAN]
SUDAN OIL SEEDS COMPANY LIMITED, P.O. Box 167, Khartoum, Sudan; Nyala, Sudan; Port Sudan, Sudan; Obied, Sudan; Tandalty, Sudan [SUDAN]
SUDAN SOAP CORPORATION, P.O. Box 23, Khartoum North, Sudan [SUDAN]
SUDAN TEA COMPANY, LTD., P.O. Box 1219, Khartoum, Sudan [SUDAN]
SUDAN TELECOMMUNICATIONS COMPANY LIMITED (a.k.a. SUDATEL), Sudatel Tower, Al Horriya Street, P.O. Box 11155, Khartoum, Sudan; 9th Floor, Sudatel Tower, Nile Street, Khartoum, Sudan; E-mail Address info@sudatel.net (Sudan); Website www.sudatel.net/en (Sudan) [SUDAN]
SUDAN WAREHOUSING COMPANY, P.O. Box 215, Khartoum, Sudan; Juba, Sudan; Kosti, Sudan; Gedarit, Sudan; Sennar, Sudan; Wad Medani, Sudan; P.O. Box 17, Port Sudan, Sudan; El Obeid, Sudan [SUDAN]
SUDANESE COMPANY FOR BUILDING AND CONSTRUCTION LIMITED, P.O. Box 2110, Khartoum, Sudan [SUDAN]
SUDANESE ESTATES BANK, Al-Baladiya Avenue, P.O. Box 309, Khartoum, Sudan [SUDAN]
SUDANESE FREE ZONES AND MARKETS COMPANY (a.k.a. SFZ), Chad; Turkey; United Arab Emirates; Saudi Arabia; P.O. Box 1789, Khartoum, Sudan [SUDAN]
SUDANESE INTERNATIONAL TOURISM COMPANY, C/O TOURISM AND HOTELS CORPORATION, P.O. Box 7104, Khartoum, Sudan [SUDAN]
SUDANESE MINING CORPORATION, P.O. Box 1034, Khartoum, Sudan [SUDAN]
SUDANESE PETROLEUM CORPORATION, 7th Floor, Al Kuwaitiah Building, El Nile Street, Khartoum, Sudan [SUDAN]
SUDANESE REAL ESTATE SERVICES COMPANY, Khartoum, Sudan [SUDAN]
SUDANESE SAVINGS BANK, P.O. Box 159, Wad Medani, Sudan [SUDAN]
SUDANESE SUGAR PRODUCTION COMPANY LIMITED (a.k.a. SUDANESE SUGAR COMPANY), P.O. Box 511, Building No. 3-Block No. 7, Alshatte Gharb-Gammaa Avenue, Khartoum, Sudan; El Gamaa Street (Aljama Street), Opposite the Authority of Electricity Building, P.O. Box 511, Khartoum, Sudan; E-mail Address sukar@sudanmail.net (Sudan) [SUDAN]
SUDAPET LTD. (a.k.a. SUDAN PETROLEUM COMPANY LIMITED; a.k.a. SUDAPET), El Nil Street, Khartoum, Sudan [SUDAN]
SUFAAT, Yazid (a.k.a. BIN SUFAAT, Yazud; a.k.a. SHUFAAT, Yazid); DOB 20 Jan 1964; POB Johor, Malaysia; nationality Malaysia; Passport A10472263 (Malaysia) (individual) [SDGT]
SUGAR AND DISTILLING INDUSTRY CORPORATION (a.k.a. SUGAR AND DISTILLING CORPORATION), New Mustafa El Amin Building, Barlaman Avenue, P.O. Box 511, Khartoum, Sudan [SUDAN]
SUGHAYR, Muhammad 'Abdallah Salih (a.k.a. AL-SAGHIR, Mohd; a.k.a. AL-SUGAIR, Muhammad 'Abdallah Salih; a.k.a. AL-SUGAYER, Muhammad; a.k.a. AL-SUGHAIER, Muhammad 'Abdallah Salih; a.k.a. AL-SUGHAIR, Muhammad 'Abdallah Salih; a.k.a. AL-SUGHAYER, Muhammad 'Abdallah Salih; a.k.a. AL-SUGHAYIR, Muhammad 'Abdallah Salih; a.k.a. AL-SUQAYR, Muhammad 'Abdallah Salih; a.k.a. ''ABDULLAH, Abu''; a.k.a. ''BAKR, Abu''); DOB 20 Aug 1972; alt. DOB 10 Aug 1972; POB Al-Karawiya, Saudi Arabia; nationality Saudi Arabia (individual) [SDGT]
SUKHARENKA, Stiapan Mikalayevich (a.k.a. SUKHARENKA, Stsiapan Mikalaevich; a.k.a. SUKHARENKA, Stsiapan Mikalayevich; a.k.a. SUKHARENKA, Stsiapan Nikolaevich; a.k.a. SUKHORENKA, Stiapan Nikolaevich; a.k.a. SUKHORENKA, Stepan Mikalaevich; a.k.a. SUKHORENKA, Stepan Mikalayevich; a.k.a. SUKHORENKA, Stepan Nikolaevich; a.k.a. SUKHORENKA, Stiapan Mikalaevich; a.k.a. SUKHORENKO, Stiapan Mikalaevich; a.k.a. SUKHORENKO, Stiapan Mikalayevich; a.k.a. SUKHORENKO, Stiapan Nikolaevich; a.k.a. SUKHORENKO, Stepan Mikalaevich; a.k.a. SUKHORENKO, Stepan Mikalayevich; a.k.a. SUKHORENKO, Stepan Nikolaevich; a.k.a. SUKHORENKO, Stsiapan Mikalaevich; a.k.a. SUKHORENKO, Stsiapan Mikalayevich; a.k.a. SUKHORENKO, Stsiapan Nikolaevich); DOB 27 Jan 1957; POB Zdudichi, Gomel' oblast, Belarus; Chairman of Belarusian KGB (individual) [BELARUS]
SULAIMAN, Mohammed Ibrahim, P.O. Box 3372, Khartoum, Sudan; House Number 27, Block Number 29, Manishia District, Khartoum, Sudan; Secretary General, IARA Headquarters (individual) [SDGT]
SUMA, Emrush; DOB 27 May 1974; POB Dimce, Serbia and Montenegro (individual) [BALKANS]
SUNSET & 97TH HOLDINGS, LLC., 9100 South Dadeland Boulevard, Suite 912, Miami, FL 33156; P.O. Box 51314, Calle 72 No. 6556, Barranquilla, Colombia; 19667 Turnberry Way, Unit 12 G, Miami, FL 33180; 780 NW Le Jeune Road, Suite 516, Miami, FL 33126; 780 NW 42nd Avenue, Suite 516, Miami, FL 33126; US FEIN 260064717 (United States) [SDNT]
SUPER BOYS GAMES LTDA., Carrera 40 No. 168–67, Bogota, Colombia; NIT # 830004047–5 (Colombia) [SDNT]
SUPERGEN LTDA., Calle 39 BIS A No. 27–16 and 27–20, Bogota, Colombia; Calle 53 No. 35A–13 of. 302, Bucaramanga, Colombia; NIT # 804009924–8 (Colombia) [SDNT]
SUPERTIENDAS LA REBAJA, Avenida Colombia No. 2–45, Cali, Colombia; Calle 9, No. 26–98, Cali, Colombia [SDNT]
SUPLIDORA LATINO AMERICANA, S.A. (a.k.a. SUPLILAT, S.A.), Panama City, Panama [CUBA]
SURAMERICANA DE HOTELES LTDA. (a.k.a. SURATEL), Calle 74 No. 53–30, Barranquilla, Colombia; NIT # 800011603–0 (Colombia) [SDNT]
SURAQIYA FOR MEDIA AND BROADCASTING (a.k.a. SBC TELEVISION; a.k.a. SBC TV; a.k.a. SORAQIA FOR MEDIA AND BROADCASTING; a.k.a. SORAQIYA FOR MEDIA AND BROADCASTING), Al Sufara' Street in the Ya'fur district, Damascus, Syria [IRAQ3]
SWE, Myint; DOB 24 Jun 1951; citizen Burma; nationality Burma; Lieutenant-General; Chief of Military Affairs Security (individual) [BURMA]
SWEDAN, Sheikh Ahmed Salim (a.k.a. AHMED THE TALL; a.k.a. ALLY, Ahmed; a.k.a. BAHAMAD; a.k.a. BAHAMAD, Sheik; a.k.a. BAHAMADI, Sheikh; a.k.a. SUWEIDAN, Sheikh Ahmad Salem; a.k.a. SWEDAN, Sheikh; a.k.a. SWEDAN, Sheikh Ahmed Salem); DOB 9 Apr 1969; alt. DOB 9 Apr 1960; POB Mombasa, Kenya; citizen Kenya (individual) [SDGT]
SWIFT INVESTMENTS (PVT) LTD., P.O. Box 3928, Harare, Zimbabwe; 730 Cowie Road, Tynwald, Harare, Zimbabwe [ZIMBABWE]
SYAWAL, Yassin (a.k.a. ABU MUAMAR; a.k.a. MOCHTAR, Yasin Mahmud; a.k.a. MUBAROK, Muhamad; a.k.a. SYAWAL, Muhammad; a.k.a. YASIN, Abdul Hadi; a.k.a. YASIN, Salim; a.k.a. ''ABU SETA''; a.k.a. ''MAHMUD''); DOB circa 1972; nationality Indonesia (individual) [SDGT]
SYLA, Azem; DOB 5 Apr 1951; POB Serbia and Montenegro (individual) [BALKANS]
SYRIATEL (a.k.a. SYRIATEL MOBILE; a.k.a. SYRIATEL MOBILE TELECOM; a.k.a. SYRIATEL MOBILE TELECOM SA), Doctors Syndicate Building, Al Jalaa Street, Abu Roumaneh Area, PO Box 2900, Damascus, Syria [SYRIA]
T N K FABRICS LIMITED, United Kingdom [IRAQ2]
T.E.G. LIMITED, 3 Mandeville Place, London, United Kingdom [IRAQ2]
T.H. ALZATE Y CIA. S.C.S., Calle 16 Norte No. 9N–41, Cali, Colombia; NIT # 805008972–0 (Colombia) [SDNT]
T.M.G. ENGINEERING LIMITED, Castle Row, Horticultural Place, Chiswick, London, United Kingdom [IRAQ2]
TABARES BEDOYA, Carlos Eduardo, c/o CHAMARTIN S.A., Cali, Colombia; c/o ADMINISTRADORA DE SERVICIOS VARIOS CALIMA S.A., Cali, Colombia; c/o ASISTENCIA PROFESIONAL ESPECIALIZADA EN COLOMBIA LIMITADA, Cali, Colombia; DOB 10 Sep 1970; Cedula No. 16791397 (Colombia); Passport 16791397 (Colombia) (individual) [SDNT]
TABRAH, Asil Sami Mohamad Madhi (a.k.a. TABRA, Asil); DOB 19 Jun 1964; nationality Iraq (individual) [IRAQ2]
TADIC, Dusan 'Dusko' (a.k.a. 'DULE'); DOB 1956; POB Cajnice, Bosnia-Herzegovina; ICTY indictee (individual) [BALKANS]
TADIC, Miroslav; DOB 12 May 1937; POB Novi Grad, Bosnia-Herzegovina; ICTY indictee (individual) [BALKANS]
TAHA, Khalil Ibrahim Mohamed Achar Foudail (a.k.a. IBRAHIM, Khalil; a.k.a. MOHAMED, Khalil Ibrahim); DOB 15 Jun 1958; POB El Fasher, Sudan; alt. POB Al Fashir, Sudan; nationality Sudan; National Foreign ID Number 4203016171 (France) issued 20 Feb 2004; Registration ID 0179427 (France); Chairman, Justice and Equality Movement; Co-founder, National Redemption Front (individual) [DARFUR]
TAHEER PERFUMERY CORPORATION, P.O. Box 2241, Khartoum, Sudan [SUDAN]

TAHIR, Buhary Seyed Abu; DOB 17 Apr 1959; POB Chennai, India; nationality Sri Lanka; Passport M1754102 (Sri Lanka) issued 16 Mar 1999 expires 16 Mar 2004; alt. Passport M2068357 (Sri Lanka) issued 4 Sep 2001 expires Sep 2006 (individual) [NPWMD]

TAHREER PERFUMERY CORPORATION, EL,, Omdurman, Sudan [SUDAN]

TAIBAH INTERNATIONAL: BOSNIA BRANCH (a.k.a. AL TAIBAH, INTL.; a.k.a. TAIBAH INTERNATIONAL AID AGENCY; a.k.a. TAIBAH INTERNATIONAL AID ASSOCIATION; a.k.a. TAIBAH INTERNATIONAL AIDE ASSOCIATION), No. 26 Tahbanksa Ulica, Sarajevo, Bosnia and Herzegovina; Avde Smajlovic 6, Sarajevo, Bosnia and Herzegovina [SDGT]

TALIBAN (a.k.a. ISLAMIC MOVEMENT OF TALIBAN; a.k.a. TAHRIKE ISLAMI'A TALIBAN; a.k.a. TALEBAN; a.k.a. TALIBAN ISLAMIC MOVEMENT; a.k.a. TALIBANO ISLAMI TAHRIK), Afghanistan [SDGT]

TALIC, Momir; DOB 15 Jul 1942; POB Piskavica, Bosnia-Herzegovina; ICTY indictee (individual) [BALKANS]

TALL, Aktham, P.O. Box 1318, Amman, Jordan (individual) [IRAQ2]

TALLER DE REPARACIONES DE AERODINOS SUS PARTES Y SERVICIOS AEREOS S.A. (a.k.a. TRAPSA), Avenida Aviacion 650, Tarapoto, San Martin, Peru; RUC # 20104242244 (Peru) [SDNTK]

TALLER DE REPARACIONES NAVALES, S.A. (a.k.a. TARENA, S.A.), Panama City, Panama [CUBA]

TAMAS COMPANY (a.k.a. NUCLEAR FUEL PRODUCTION COMPANY; a.k.a. TAMAS), No. 84, 20th Street, Northern Kargar Avenue, Tehran 10000, Iran [NPWMD]

TAMIL FOUNDATION, 517 E. Oldtown Road, Cumberland, MD 21502; Tax ID No. 52–1699409 (United States) [SDGT]

TAMILS REHABILITATION ORGANISATION (a.k.a. ORGANISATION DE REHABILITATION TAMOULE; a.k.a. ORGANISATION PRE LA REHABILITATION TAMIL; a.k.a. ORGANIZZAZIONE PER LA RIABILITAZIONE DEI TAMIL; a.k.a. ORT FRANCE; a.k.a. TAMIL REHABILITATION ORGANIZATION; a.k.a. TAMIL REHABILITERINGS ORGANISASJONEN; a.k.a. TAMILISCHE REHABILITATION ORGANISATION; a.k.a. TAMILS REHABILITATION ORGANIZATION; a.k.a. TAMILSK REHABILITERINGS ORGANISASJON; a.k.a. TRO; a.k.a. TRO DANMARK; a.k.a. TRO ITALIA; a.k.a. TRO NORGE; a.k.a. TRO SCHWEIZ; a.k.a. TSUNAMI RELIEF FUND—COLOMBO, SRI LANKA; a.k.a. WHITE PIGEON; a.k.a. WHITEPIGEON), No. 69 Kalikovil Road, Kurumankadu, Vavuniya, Sri Lanka; 1079 Garratt Lane, London SW17 0LN, United Kingdom; Postfach 2018, Emmenbrucke 6021, Switzerland; Via Dante 210, Palermo 90141, Italy; Paranthan Road, Kaiveli Puthukkudiyiruppu, Mullaitivu, Sri Lanka; 75/4 Barnes Place, Colombo 7, Sri Lanka; Kandasamy Koviladi, Kandy Road (A9 Road), Kilinochchi, Sri Lanka; P.O. Box 4742, Sofienberg, Oslo 0506, Norway; Voelklinger Str. 8, Wuppertal 42285, Germany; Box 4254, Knox City, VIC 3152, Australia; Address Unknown, Finland; Address Unknown, Belgium; 26 Rue du Departement, Paris 75018, France; P.O. Box 212, Vejile 7100, Denmark; 254 Jaffna Road, Kilinochchi, Sri Lanka; No. 6 Jalan 6/2, Petaling Jaya 46000, Malaysia; Arasaditivu Kokkadicholai, Batticaloa, Sri Lanka; 9/1 Saradha Street, Trincomalee, Sri Lanka; Ananthapuram, Kilinochchi, Sri Lanka; 371 Dominion Road, Mt. Eden, Aukland, New Zealand; 356 Barkers Road, Hawthorn, Victoria 3122, Australia; Langelinie 2A, St, TV 1079, Vejile 7100, Denmark; 410/112 Buller Street, Buddhaloga Mawatha, Colombo 7, Sri Lanka; 517 Old Town Road, Cumberland, MD 21502; Address Unknown, Durban, South Africa; Box 44, Tumba 147 21, Sweden; 8 Gemini—CRT, Wheelers Hill 3150, Australia; P.O. Box 82, Herning 7400, Denmark; Address Unknown, Vaharai, Sri Lanka; No. 9 Main Street, Mannar, Sri Lanka; 410/412 Bullers Road, Colombo 7, Sri Lanka; P.O. Box 10267, Dominion Road, Aukland, New Zealand; Gruttolaan 45, BM landgraaf 6373, Netherlands; Tribschenstri, 51, Lucerne 6005, Switzerland; Ragama Road, Akkaraipattu-07, Amparai, Sri Lanka; Warburgstr. 15, Wuppertal 42285, Germany; M.G.R. Lemmens, str-09, BM Landgraff 6373, Netherlands; 2390 Eglington Avenue East, Suite 203A, Toronto, Ontario M1K 2P5, Canada; Registration ID D4025482 (United States); alt. Registration ID 1107434 (United Kingdom); alt. Registration ID 50706 (Sri Lanka); alt. Registration ID 802401–0962 (Sweden); alt. Registration ID 6205 (Australia); Tax ID No. 52–1943868 (United States) [SDGT]

TAMMANY H (f.k.a. PRIMROSE ISLANDS) (vessel) [CUBA]

TANCHON COMMERCIAL BANK (f.k.a. CHANGGWANG CREDIT BANK; f.k.a. KOREA CHANGGWANG CREDIT BANK), Saemul 1-Dong Pyongchon District, Pyongyang, Korea, North [NPWMD]

TAPIA ORTEGA, Abigail (a.k.a. TAPIA ORTEGA DE ARRIOLA, Abigail), c/o GASOLINERAS SAN FERNANDO S.A. DE C.V., Saucillo, Mexico; Avenida Novena No. 47, Saucillo, Chihuahua, Mexico; DOB 23 Sep 1974; POB Mexico City, Mexico; citizen Mexico; nationality Mexico (individual) [SDNTK]

TARABAIN CHAMAS, Mohamad (a.k.a. CHAMS, Mohamad; a.k.a. TARABAY, Muhammad; a.k.a. TARABAYN SHAMAS, Muhammad), Avenida Jose Maria De Brito 606, Apartment 51, Foz do Iguacu, Brazil; Cecilia Meirelles 849, Bloco B, Apartment 09, Foz do Iguacu, Brazil; DOB 11 Jan 1967; POB Asuncion, Paraguay; citizen Lebanon; alt. citizen Paraguay; alt. citizen Brazil; National Foreign ID Number RNE: W031645–8 (Brazil) (individual) [SDGT]

TARIQ ABU SHANAB EST. FOR TRADE & COMMERCE (a.k.a. ABU SHANAB METALS ESTABLISHMENT; a.k.a. AMIN ABU SHANAB & SONS CO.; a.k.a. SHANAB METALS ESTABLISHMENT; a.k.a. TARIQ ABU SHANAB EST.; a.k.a. TARIQ ABU SHANAB METALS ESTABLISHMENT), Musherfeh, P.O. Box 766, Zarka, Jordan [IRAQ2]

TARRITOS S.A., Calle 23 BN No. 5N–37, Ofc. 202, Cali, Colombia; NIT # 805028114–3 (Colombia) [SDNT]

TAURA S.A., Calle 13 No. 68–26, Of. 214, 313 & 314, Cali, Colombia; Calle 13 No. 68–06, Of. 204, Cali, Colombia; Carrera 115 No. 16B–121, Cali, Colombia; NIT # 800183713–1 (Colombia) [SDNT]

TAVEESIN, Nalinee (a.k.a. TAVEESIN, Nalinee Joy; a.k.a. TAWEESIN, NALINEE), 19–8 Soi Passana 3, Sukhumvit Road, Pakanong Nua, Wattana, Bangkok 10110, Thailand; 33 Soi Soonvijai 4, Rama IX Road, Soi 26, Success Tower, Huai Khwang, Bang Kapi, Bangkok 10320, Thailand; 33 Soi Soonwichai 4 Bangkapi, Huaykhwang, Bangkok 10310, Thailand; 14th Floor of Modern Tower, Tower 87/110 Sukhumvit 63, Wattana, Bangkok 10110, Thailand; DOB 12 Feb 1960; citizen Thailand; nationality Thailand; Passport Z066420 (Thailand); Managing Director (individual) [ZIMBABWE]

TAWENGWA, Solomon; DOB 15 Jun 1940; Former Executive Mayor of Harare; Deceased (individual) [ZIMBABWE]

TAYLOR, Charles (Junior) (a.k.a. ''CHUCKIE''); DOB 12 FEB 1978; Advisor and son of former President of Liberia Charles Taylor (individual) [LIBERIA]

TAYLOR, Charles Ghankay (a.k.a. SOME, Jean-Paul; a.k.a. SONE, Jean-Paul; a.k.a. TAYLOR, Charles MacArthur); DOB 1 Sep 1947; Former President of Liberia (individual) [LIBERIA]

TAYLOR, Jewell Howard; DOB 17 JAN 1963; Wife of former President of Liberia Charles Taylor (individual) [LIBERIA]

TAYLOR, Tupee Enid; DOB 17 DEC 1962; Ex-wife of former President of Liberia Charles Taylor (individual) [LIBERIA]

TEA PACKETING AND TRADING COMPANY, P.O. Box 369, Khartoum, Sudan [SUDAN]

TECHNIC DIGEMEX CORP., Calle 34 No. 4–50, Office 301, Panama City, Panama [CUBA]

TECHNIC HOLDING INC., Calle 34 No. 4–50, Office 301, Panama City, Panama [CUBA]

TECHNOLOGY AND DEVELOPMENT GROUP LTD (a.k.a. T.D.G.), Centric House 390/391, Strand, London, United Kingdom [IRAQ2]

TECNICAS CONTABLES Y ADMINISTRATIVAS (a.k.a. TECONTA), Carrera 3 No. 11–32 of. 939, Cali, Colombia; Cedula No. 16242828 (Colombia) [SDNT]

TECNOLOGIA DIGITAL Y SERVICIOS, S.A. DE C.V., Blv. Agua Caliente No. 221, Col. Centro Zona Este, Tijuana, Baja California, Mexico; Blv. Agua Caliente No. 21, Col. Aviacion, Tijuana, Baja California, Mexico; R.F.C. TDS021031UD6 (Mexico) [SDNTK]

TECNOVET LTDA.TECNICAS VETERINARIAS TECNOVET LTDA. (a.k.a. TECNOVET LTDA.), Carrera 13 No. 13–41, Bogota, Colombia; NIT # 830092117–8 (Colombia) [SDNT]

TEEN; Vessel Registration Identification IMO 9101649 (vessel) [NPWMD]

TEJAR LA MOJOSA S.A., Transversal 13 No. 20C–35, Caucasia, Antioquia, Colombia; Corregimiento Piemonte, Vereda la Mojosa, Caceres, Antioquia, Colombia; NIT # 900110438–9 (Colombia) [SDNT]

TEMIS SHIPPING CO., Panama [CUBA]
TEMPLE DEL PITIC S.A. DE C.V. (f.k.a. CORPORATIVO GAXIOLA HERMANOS S.A. DE C.V.), Avenida Angel Garcia Aburto #62, Colonia Loma Linda, Hermosillo, Sonora, Mexico; Colonizadores No. 83D, Colonia Las Quintas, Esq. Quintas de las Aves, Hermosillo, Sonora 83240, Mexico; Blvd. Francisco Eusebio Kino 177–7, Col. 5 de Mayo, Hermosillo, Sonora 83010, Mexico; Blvd Rodriguez 108, Col Centro, Hermosillo, Sonora, Mexico; R.F.C. CGH960503DL9 (Mexico); d.b.a. ''ANARQUIA PAINTBALL'' [SDNTK]
TENTH OCEAN; Vessel Registration Identification IMO 9165815 (vessel) [NPWMD]
TEPHYS (f.k.a. PAMIT C) (vessel) [CUBA]
TERAPIAS VETERINARIA LIMITADA (a.k.a. TERVET LTDA.), Calle 39 BIS A No. 27–16, Bogota, Colombia; NIT # 830068307–1 (Colombia) [SDNT]
TERMINADOS BASICOS DE TIJUANA, S. DE R.L. DE C.V., Lago Chapultepec, 90 Lago, Laguna de los Terminos y Lago Chalco, Tijuana, Baja California, Mexico; R.F.C. TBT–030115-AUA (Mexico) [SDNTK]
TET KHAM (S) PTE. LTD., 6 Loyang Way 1 508704, Singapore; Registration ID 200004646G (Singapore) issued 29 May 2000 [SDNTK]
TET KHAM CONSTRUCTION COMPANY LIMITED, No. 7, Corner of Inya Road & Oo Yin Street, Kamayut Township, Yangon, Burma; Pyinmana Taung Twin Road, Let Pan Khar Village, Pyinmanar, Mandalay, Burma [SDNTK]
TET KHAM GEMS CO., LTD., No. 7 Inya Road & Oo Yin Street, Kamayut Township, Yangon, Burma [SDNTK]
TEYREBAZEN AZADIYA KURDISTAN (a.k.a. KURDISTAN FREEDOM HAWKS; a.k.a. THE FREEDOM HAWKS OF KURDISTAN; a.k.a. ''TAK'') [SDGT]
THA, Soe, Burma; DOB 1945; citizen Burma; nationality Burma; Minister of National Planning and Economic Development (individual) [BURMA]
THACI, Menduh; DOB 3 Mar 1965; POB Tetovo, Macedonia (individual) [BALKANS]
THAER, Mansour; DOB 21 Mar 1974; POB Baghdad, Iraq (individual) [SDGT]
THAUNG (a.k.a. THAUNG, U), Burma; DOB 6 Jul 1937; citizen Burma; nationality Burma; Minister of Labor; Minister of Science & Technology (individual) [BURMA]
THE AID ORGANIZATION OF THE ULEMA (a.k.a. AL RASHEED TRUST; a.k.a. AL RASHID TRUST; a.k.a. AL-RASHEED TRUST; a.k.a. AL-RASHID TRUST), Office Dha'rb-i-M'unin, Room no. 3, Third Floor, Moti Plaza, near Liaquat Bagh, Murree Road, Rawalpindi, Pakistan; Office Dha'rb-i-M'unin, Top Floor, Dr. Dawa Khan Dental Clinic Surgeon, Main Baxar, Mingora, Swat, Pakistan; Office Dha'rb-i-M'unin, Z.R. Brothers, Katchehry Road, Chowk Yadgaar, Peshawar, Pakistan; 617 Clifton Center, Block 5, 6th Floor, Clifton, Karachi, Pakistan; 302b-40, Good Earth Court, Opposite Pia Planitarium, Block 13a, Gulshan -I Iqbal, Karachi, Pakistan; Kitab Ghar, Darul Ifta Wal Irshad, Nazimabad No. 4, Karachi, Pakistan; Office Dha'rb-i-M'unin, opposite Khyber Bank, Abbottabad Road, Mansehra, Pakistan; 605 Landmark Plaza, 11 Chundrigar Road, Opposite Jang Building, Karachi, Pakistan; Jamia Masjid, Sulaiman Park, Begum Pura, Lahore, Pakistan; Operations in Afghanistan: Herat, Jalalabad, Kabul, Kandahar, Mazar Sharif; Also operations in: Kosovo,Chechnya [SDGT]
THE ISLAMIC INTERNATIONAL BRIGADE (a.k.a. INTERNATIONAL BATTALION; a.k.a. ISLAMIC PEACEKEEPING INTERNATIONAL BRIGADE; a.k.a. PEACEKEEPING BATTALION; a.k.a. THE INTERNATIONAL BRIGADE; a.k.a. THE ISLAMIC PEACEKEEPING ARMY; a.k.a. THE ISLAMIC PEACEKEEPING BRIGADE) [SDGT]
THE RIYADUS-SALIKHIN RECONNAISSANCE AND SABOTAGE BATTALION OF CHECHEN MARTYRS (a.k.a. RIYADH-AS-SALIHEEN; a.k.a. RIYADUS-SALIKHIN RECONNAISSANCE AND SABOTAGE BATTALION; a.k.a. RIYADUS-SALIKHIN RECONNAISSANCE AND SABOTAGE BATTALION OF SHAHIDS (MARTYRS); a.k.a. THE SABOTAGE AND MILITARY SURVEILLANCE GROUP OF THE RIYADH AL-SALIHIN MARTYRS) [SDGT]
THE SPECIAL PURPOSE ISLAMIC REGIMENT (a.k.a. ISLAMIC REGIMENT OF SPECIAL MEANING; a.k.a. THE AL-JIHAD-FISI-SABILILAH SPECIAL ISLAMIC REGIMENT; a.k.a. THE ISLAMIC SPECIAL PURPOSE REGIMENT) [SDGT]
THEIN, Tin Naing, Burma; DOB 1955; citizen Burma; nationality Burma; Brigadier General, Minister of Commerce (individual) [BURMA]
THEIN, U Kyaw, 503 Sembawang Road, #02–29 757707, Singapore; DOB 25 Oct 1947; citizen Burma; nationality Burma; National ID No. S2733659J (Singapore) issued 7 Jul 2005; permanent resident Singapore; c/o Air Bagan Holdings Pte. Ltd.; c/o Htoo Wood Products Pte. Ltd.; c/o Pavo Aircraft Leasing Pte. Ltd.; c/o Pavo Trading Pte. Ltd.; permanent resident Singapore (individual) [BURMA]
THET, Khin Lay (a.k.a. THET, Daw Khin Lay); DOB 19 Jun 1947; wife of Thura Shwe Mann (individual) [BURMA]
THET, Naing Win (a.k.a. ''THET NAING WIN''), c/o TET KHAM CONSTRUCTION COMPANY LIMITED, Mandalay, Burma; Passport 944168 (Burma) (individual) [SDNTK]
THI, Lun; DOB 18 Jul 1940; citizen Burma; nationality Burma; Brigadier-General; Minister of Energy (individual) [BURMA]
THIHA (a.k.a. THI HA); DOB 24 Jun 1960; c/o Htoo Group of Companies; c/o Htoo Trading Company Limited (individual) [BURMA]
TIFON (vessel) [CUBA]
TIGRIS TRADING, INC., 5903 Harper Road, Solon; 2 Stratford Place, London W1N 9AE, United Kingdom [IRAQ2]
TILFAH, Sajida Khayrallah; DOB 1937; POB Al-Awja, near Tikrit, Iraq; nationality Iraq; wife of Saddam Hussein al-Tikriti (individual) [IRAQ2]
TIMPANI LTD (a.k.a. TIMPANI EXPORT LTD; a.k.a. TIMPANI LIMITED), Moorgate House, King Street, Newton Abbot, Devon TQ12 2LG, United Kingdom; Falcon Cliff, Palace Road, Douglas, Isle of Man, Man, Isle of; Mapstone House, Mapstone Hill, Lustleigh, Newton Abbot, Devon TQ13 9SE, United Kingdom; Business Registration Document # 3547414 (United Kingdom) [ZIMBABWE]
TING SHING TAI JEWELLERY (HK) CO. LIMITED (a.k.a. PO YING JEWELLERY (HK) CO. LIMITED), Room 3605 36/F Wu Chung House, 213 Queens Road East, Wan Chai, Hong Kong; Business Registration Document # 32369313 (Hong Kong); Certificate of Incorporation Number 784702 (Hong Kong) [SDNTK]
TIRADO DIAZ, Luis Alfonso, c/o PRODUCTOS FARMACEUTICOS COLLINS, S.A. DE C.V., Zapopan, Jalisco, Mexico; DOB 20 Jul 1968; POB Jalisco, Mexico; citizen Mexico; nationality Mexico; C.U.R.P. TIDL680720HJCRZS04 (Mexico) (individual) [SDNTK]
TIRADO DIAZ, Rolando, c/o PRODUCTOS FARMACEUTICOS COLLINS, S.A. DE C.V., Zapopan, Jalisco, Mexico; DOB 28 Mar 1971; POB Jalisco, Mexico; citizen Mexico; nationality Mexico; C.U.R.P. TIDR710328HJCRZL02 (Mexico) (individual) [SDNTK]
TIRADO ESCAMILLA, Telesforo Baltazar (a.k.a. TIRADO ESCAMILLA, Telesforo Baltasar; a.k.a. TIRADO MARTINEZ, Baltazar), c/o PRODUCTOS FARMACEUTICOS COLLINS, S.A. DE C.V., Zapopan, Jalisco, Mexico; Maya 3290, Guadalajara, Jalisco, Mexico; Rinconada Del Tulipan 3485, Guadalajara, Jalisco, Mexico; Calle Mallas 3278, Guadalajara, Jalisco, Mexico; DOB 10 Jan 1939; alt. DOB 09 Jan 1939; POB Nayarit, Mexico; citizen Mexico; nationality Mexico; C.U.R.P. TIET390110HNTRSL04 (Mexico) (individual) [SDNTK]
TITOS BOLO CLUB, Carrera 51B No. 94–110, Barranquilla, Colombia; NIT # 890108148–6 (Colombia) [SDNT]
TLILI, Al-Azhar Ben Ammar Ben Abadallah, Via Carlo Porta n.97, Legnano, Italy; DOB 26 Mar 1969; POB Tunis, Tunisia; Italian Fiscal Code TLLLHR69C26Z352G (individual) [SDGT]
TOBOGON, Avenida Guadalupe con Avenida Simon Bolivar, Cali, Colombia [SDNT]
TODOBOLSAS Y COLSOBRES (f.k.a. RODRIGUEZ CARRENO LTDA. TODO BOLSAS Y COLSOBRES), Carrera 20 No. 66–34, Bogota, Colombia; NIT # 860053774–1 (Colombia) [SDNT]
TODOROVIC, Stevan; DOB 29 Dec 1957; POB Donja Slatina, Bosnia-Herzegovina; ICTY indictee (individual) [BALKANS]
TODOVIC, Savo; DOB 11 Dec 1952; POB Rijeka, Bosnia-Herzegovina; ICTY indictee (individual) [BALKANS]
TOLEDO CARREJO, Luis Raul, c/o Distribuidora Imperial De Baja California, S.A. de C.V., Tijuana, Baja California, Mexico; Ave. Xavier Villaurrutia 9950, Colonia Zona Urbana Rio, Tijuana, Baja California, Mexico; Ave. Queretaro 2984, Colonia Francisco I. Madero, Tijuana, Baja California, Mexico; Calle De Los Olivos 10549, Colonia Jardines de Chapultepec, Tijuana, Baja California, Mexico; c/o Farmacia Vida Suprema, S.A. DE C.V., Tijuana, Baja California, Mexico; c/o

Administradora De Imuebles Vida, S.A. DE C.V., Tijuana, Baja California, Mexico; DOB 30 Jan 1959; POB Guadalajara, Jalisco, Mexico (individual) [SDNTK]

TOLEDO, R.F., 20 Ironmonger Lane, London EC2V 8EF, United Kingdom; Managing Director, Havana International Bank (individual) [CUBA]

TONCEL REDONDO, Milton De Jesus (a.k.a. ''EL NEGRO''; a.k.a. ''JOAQUIN GOMEZ''; a.k.a. ''ORO CHURCO''; a.k.a. ''USURRIAGA''); DOB 18 Mar 1947; alt. DOB Feb 1949; POB Barrancas, La Guajira, Colombia; alt. POB Ubita, Boyaca, Colombia; Cedula No. 15237742 (Colombia); alt. Cedula No. 70753211 (Colombia) (individual) [SDNTK]

TOP, Noordin Mohamed (a.k.a. MAT TOP, Noordin; a.k.a. THOB, Noordin Mohammad; a.k.a. TOP, Noor Din bin Mohamed; a.k.a. TOP, Nordin Mohd); DOB 11 Aug 1968; POB Malaysia; nationality Malaysia (individual) [SDGT]

TORRES CORTES, Joselin, c/o AUREAL INMOBILIARIA LTDA., Bogota, Colombia; DOB 26 Jul 1957; Cedula No. 19482747 (Colombia) (individual) [SDNT]

TORRES CUETER, Guillermo Enrique (a.k.a. ''JULIAN CONRADO''); DOB 17 Aug 1954; POB Turbaco, Bolivar, Colombia; citizen Colombia; nationality Colombia; Cedula No. 9281858 (Colombia) (individual) [SDNTK]

TORRES FELIX, Javier (a.k.a. FELIX TORRES, Javier; a.k.a. TAMAYO TORRES, Horacio; a.k.a. ''COMPADRE''; a.k.a. ''EL JT''), Calle Paseo La Cuesta # 1550, Apt 6, Colonia Lomas De Guadalupe, Culiacan Rosales, Sinaloa, Mexico; DOB 19 Oct 1960; POB Mexico; citizen Mexico; nationality Mexico (individual) [SDNTK]

TORRES LOZANO, Isolina, c/o LABORATORIOS BLAIMAR DE COLOMBIA S.A., Bogota, Colombia; c/o COSMEPOP, Bogota, Colombia; DOB 11 Mar 1963; Cedula No. 28796392 (Colombia) (individual) [SDNT]

TORRES MORENO, Marisol, c/o PROVIDA E.U., Cali, Colombia; DOB 10 May 1969; Cedula No. 31992583 (Colombia); Passport 31992583 (Colombia) (individual) [SDNT]

TORRES RAMIREZ, Federico Carlos, c/o MULTICAJA DE TIJUANA, S.A. DE C.V.,, Tijuana, Baja California, Mexico; Carillo Puerto, Calle 8317 2, Zona Central, Tijuana, Baja California, Mexico; c/o STRONG LINK DE MEXICO, S.A. DE C.V., Tijuana, Baja California, Mexico; DOB 11 Apr 1959; POB Zacatecas, Mexico; citizen Mexico; nationality Mexico; C.U.R.P. TORF591104HZSRMD07 (Mexico); R.F.C. TORF–591104-SA7 (Mexico) (individual) [SDNTK]

TORRES REINA, Oscar Javier, c/o COOPERATIVA DE TRABAJO ASOCIADO ACTIVAR, Bogota, Colombia; c/o COOPCREAR, Bogota, Colombia; c/o COOPERATIVA MULTIACTIVA DE COLOMBIA FOMENTAMOS, Bogota, Colombia; DOB 2 Jan 1978; Cedula No. 79886044 (Colombia); Passport 79886044 (Colombia) (individual) [SDNT]

TORRES VICTORIA, Jorge (a.k.a. ''PABLO CATATUMBO''); DOB 19 Mar 1953; POB Cali, Valle, Colombia; Cedula No. 14990220 (Colombia) (individual) [SDNTK]

TORRES, Ana Leonor (a.k.a. ''CATA''; a.k.a. ''CATALINA''; a.k.a. ''JULIANA''; a.k.a. ''MARIA''), Colombia; DOB 05 Sep 1961; POB Puerto Lopez, Meta, Colombia; citizen Colombia; nationality Colombia; Cedula No. 21243624 (Colombia) (individual) [SDNTK]

TORRES, Manuel, Federico Boyd Avenue & 51 Street, Panama City, Panama; Representative, Banco Nacional de Cuba (individual) [CUBA]

TOSCO GARCIA, Arnaldo, Panama (individual) [CUBA]

TOSONG TECHNOLOGY TRADING CORPORATION, Pyongyang, Korea, North [NPWMD]

TOUR & MARKETING INTERNATIONAL LTD. (a.k.a. GO CUBA PLUS; a.k.a. T&M INTERNATIONAL LTD.; a.k.a. WWW.ABOUTCUBA.COM; a.k.a. WWW.BONJOURCUBA.COM; a.k.a. WWW.CIAOCUBA.COM; a.k.a. WWW.CIGARSSUPERSTORE.COM; a.k.a. WWW.CUBAADVICE.COM; a.k.a. WWW.CUBA-BARACOA.COM; a.k.a. WWW.CUBA-BAYAMO.COM; a.k.a. WWW.CUBA-CAMAGUEY.COM; a.k.a. WWW.CUBA-CAYOCOCO.COM; a.k.a. WWW.CUBA-CAYOGUILLERMO.COM; a.k.a. WWW.CUBA-CAYOLARGO.COM; a.k.a. WWW.CUBA-CAYOLEVISA.COM; a.k.a. WWW.CUBA-CAYOSABINAL.COM; a.k.a. WWW.CUBA-CAYOSAETIA.COM; a.k.a. WWW.CUBA-CAYOSANTAMARIA.COM; a.k.a. WWW.CUBA-CHE.COM; a.k.a. WWW.CUBA-CIEGODEAVILA.COM; a.k.a. WWW.CUBA-CIENFUEGOS.COM; a.k.a. WWW.CUBA-ECOTOURISM.COM; a.k.a. WWW.CUBA-ELGUEA.COM; a.k.a. WWW.CUBAFIRST.COM; a.k.a. WWW.CUBAFUN.COM; a.k.a. WWW.CUBA-GIRON.COM; a.k.a. WWW.CUBA-GRANMA.COM; a.k.a. WWW.CUBA-GUAMA.COM; a.k.a. WWW.CUBA-GUARDALAVACA.COM; a.k.a. WWW.CUBA-HAVANACITY.COM; a.k.a. WWW.CUBA-HEMINGWAY.COM; a.k.a. WWW.CUBA-HOLGUIN.COM; a.k.a. WWW.CUBA-ISLADELAJUVENTUD.COM; a.k.a. WWW.CUBA-JARDINESDELEREY.COM; a.k.a. WWW.CUBA-LAHABANA.COM; a.k.a. WWW.CUBA-LASTUNAS.COM; a.k.a. WWW.CUBA-MATANZAS.COM; a.k.a. WWW.CUBANBASEBALLTRAVEL.COM; a.k.a. WWW.CUBANCULTURE.COM; a.k.a. WWW.CUBA-OLDHAVANA.COM; a.k.a. WWW.CUBAONE.COM; a.k.a. WWW.CUBA-PINARDELRIO.COM; a.k.a. WWW.CUBA-SANCTISPIRITUS.COM; a.k.a. WWW.CUBA-SANTALUCIA.COM; a.k.a. WWW.CUBA-SANTIAGODECUBA.COM; a.k.a. WWW.CUBA-SHOPPING.COM; a.k.a. WWW.CUBA-SOROA.COM; a.k.a. WWW.CUBASPORTS.COM; a.k.a. WWW.CUBA-TOPESDECOLLANTES.COM; a.k.a. WWW.CUBATRAVELDIRECTORY.COM; a.k.a. WWW.CUBA-TRINIDAD.COM; a.k.a. WWW.CUBA-VARADEROBEACH.COM; a.k.a. WWW.CUBA-VILLACLARA.COM; a.k.a. WWW.CUBAVIP.COM; a.k.a. WWW.CUBA-WEATHER.COM; a.k.a. WWW.GOCUBA.COM; a.k.a. WWW.GOCUBA.CU; a.k.a. WWW.GOCUBAPLUS.COM; a.k.a. WWW.IPIXCUBA.COM; a.k.a. WWW.NO.GOCUBAPLUS.COM; a.k.a. WWW.REALESTATECUBA.COM; a.k.a. WWW.TOURANDMARKETING.COM; a.k.a. WWW.VAMOSACUBA.COM), Hotel Viejo y el Mar, Suite 6005, Marina Hemingway, Playa, Havana, Cuba; Hotel Acuario, Suite 3541, Marina Hemingway, Santa Fe, Playa, Havana, Cuba; Hotel Acuario, Suite 3511, Marina Hemingway, Santa Fe, Playa, Havana, Cuba; Calle 12 y Mar, Varadero Matanzas, Cuba; Ellen L. Skelton Building, 4th Floor, Fishers Estate, P.O. Box 3820, Road Town, Tortola, Virgin Islands, British; P.O. Box 24258, London, England SE9 1WS, United Kingdom; Hotel Acuario, Suite 3542, Marina Hemingway, Santa Fe, Playa, Havana, Cuba; Calle Ramon Pino, No. 4, 38650, Los Cristianos, Arona, Tenerife, Spain [CUBA]

TOURISM AND HOTELS CORPORATION, Ed Damer, Sudan; P.O. Box 7104, Khartoum, Sudan; Port Sudan, Sudan; El Fasher, Sudan; Khartoum Airport, Sudan [SUDAN]

TOVAR PARRA, Ferney (a.k.a. ''DIEGO''; a.k.a. ''FERCHO''); DOB 17 Nov 1966; POB Cartagena del Chaira, Caqueta, Colombia; Cedula No. 17640605 (Colombia) (individual) [SDNTK]

TOYS FACTORY, S.A. DE C.V., Blv. Gustavo Diaz Ordaz No. 16E–5, Col. Pque Ind. Bajamar Aguila, Tijuana, Baja California, Mexico; Blv. Gustavo Diaz Ordaz No. 1, Col. Las Brisas, Tijuana, Baja California, Mexico; Ave. Presidente Carlos Salinas de Gortari No. 5, Col. Infonavit Presidente, Tijuana, Baja California, Mexico; Ave. Poniente Carlos Salinas S/N, Col. Infonavit, Tijuana, Baja California, Mexico; R.F.C. TFA021112AR9 (Mexico) [SDNTK]

TRABELSI, Chabaane Ben Mohamed, via Cuasso, n. 2, Porto Ceresio, Varese, Italy; DOB 1 May 1966; POB Rainneen, Tunisia; nationality Tunisia; Italian Fiscal Code TRBCBN66E01Z352O; Passport L 945660 issued 4 Dec 1998 expires 3 Dec 2001 (individual) [SDGT]

TRABELSI, Mourad (a.k.a. ABOU DJARRAH; a.k.a. AL-TRABELSI, Mourad Ben Ali Ben Al-Basheer), Via Geromini 15, Cremona, Italy; DOB 20 May 1969; POB Menzel Temime, Tunisia; nationality Tunisia; Passport G 827238 issued 1 Jun 1996 expires 31 May 2001; arrested 1 Apr 2003 (individual) [SDGT]

TRADING & MARITIME INVESTMENTS, San Lorenzo, Honduras [IRAQ2]

TRADING AND TRANSPORT SERVICES COMPANY, LTD., P.O. Box 910606, Amman 11191, Jordan; Al-Razi Medical Complex, Jabal Al-Hussein, Amman, Jordan; P.O. Box 212953, Amman 11121, Jordan [IRAQ2]

TRAMP PIONEER SHIPPING CO., Panama, c/o Anglo Caribbean Shipping Co., Ltd., 4th Floor, South Phase 2, South Quay Plaza, 183 Mars, London E14 9SH, United Kingdom [CUBA]

TRANS AVIATION GLOBAL GROUP INC., 811 S. Central Expwy, Ste 210, Richardson, TX 75080 [LIBERIA]

TRANS MERITS CO. LTD., 1F, No. 49, Lane 280, Kuang Fu S. Road, Taipei, Taiwan;

Business Registration Document # 16316976 (Taiwan) [NPWMD]

TRANS PACIFIC WORLD LEASING LIMITED, First Floor International Building, Kumul Highway, Port Vila, Vanuatu; P.O. Box 213, Port Vila, Vanuatu [SDNT]

TRANSAVIA NETWORK (a.k.a. NV TRANS AVIATION NETWORK GROUP; a.k.a. TAN GROUP; a.k.a. TRANS AVIATION; a.k.a. TRANSAVIA TRAVEL AGENCY; a.k.a. TRANSAVIA TRAVEL CARGO), P.O. Box 3962, Sharjah, United Arab Emirates; P.O. Box 2190, Ajman, United Arab Emirates; 1304 Boorj Building, Bank Street, Sharjah, United Arab Emirates; Ostende Airport, Belgium [LIBERIA]

TRANSIT, S.A., Panama [CUBA]

TRANSPORTES AEREOS UNIDOS SELVA AMAZONICA S.A. (a.k.a. TAUSA S.A.; f.k.a. TRANSPORTES AEREAS UCHIZA S.A.), Calle Soledad 111, Int. 302, Lima, Peru; RUC # 20110372320 (Peru) [SDNTK]

TRANSPORTES DEL ESPIRITU SANTO S.A., Calle 14 No. 4–123, La Union, Valle, Colombia; Salida a la Victoria, La Union, Valle, Colombia; NIT # 821002436–5 (Colombia) [SDNT]

TRANSPORTES MICHAEL LTDA. (a.k.a. TRANSMIKE LTDA.), Sitio Nuevo, Magdalena, Colombia; Calle 30 No. 10–50, Barranquilla, Colombia; NIT # 802024118–3 (Colombia) [SDNT]

TRANSPORTING, LLC, 6555 NW 36th Street, Suite 304, Virginia Gardens, FL 33166; 9443 Fontainebleau Boulevard, No. 114, Miami, FL 33172; Business Registration Document # L00000012836 (United States); US FEIN 65–1048798 [BPI-SDNT]

TRASLAVINA BENAVIDES, Erasmo (a.k.a. ''ISMARDO MURCIA LOZADA''; a.k.a. ''ISNARDO MURCIA LOZADA''; a.k.a. ''JIMMY GUERRERO''); DOB 19 Jun 1958; POB Guacamayo, Santander, Colombia; citizen Colombia; nationality Colombia; Cedula No. 13642033 (Colombia) (individual) [SDNTK]

TRAVEL SERVICES, INC., Hialeah, FL [CUBA]

TREJO FREIRE, Efrain Pablo (a.k.a. TREJOS FREYRE, Pablo), Colombia; DOB 07 Jun 1951; citizen Colombia; Cedula No. 13004986 (Colombia); International FARC Commission Member for Peru (individual) [SDNTK]

TREJOS AGUILAR, Melba, Calle 25 No. 35–66, Tulua, Valle, Colombia; Cedula No. 29991503 (Colombia) (individual) [SDNT]

TREJOS AGUILAR, Sonia, c/o INVERSIONES EL EDEN S.C.S., Cali, Colombia; Carrera 8 No. 6–37, Zarzal, Valle del Cauca, Colombia; Cali, Colombia; c/o AGROINVERSORA URDINOLA HENAO Y CIA. S.C.S., Cali, Colombia; c/o INDUSTRIAS AGROPECUARIAS DEL VALLE LTDA., Cali, Colombia; c/o EXPLOTACIONES AGRICOLAS Y GANADERAS LA LORENA S.C.S., Cali, Colombia; Cedula No. 66675927 (Colombia) (individual) [SDNT]

TREJOS MARQUEZ, Arnulfo, Carrera 4 No. 9–17 of. 308, AA 38028, Cali, Colombia; c/o CONSTRUCTORA TREMI LTDA., Cali, Colombia; DOB 5 Sep 1947; Cedula No. 6090595 (Colombia) (individual) [SDNT]

TREMALT LTD (a.k.a. TREMALT LIMITED), Hurst Grove, Sandford Lane, Hurst, Reading, Berkshire RG10 0SQ, United Kingdom; Thetford Farm, P.O. Box HP86, Mount Pleasant, Harare, Zimbabwe; Virgin Islands, British; New Boundary House, London Road, Sunningdale, Ascot, Berkshire SL5 0DJ, United Kingdom [ZIMBABWE]

TREVISO TRADING CORPORATION, Edificio Banco de Boston, Panama City, Panama [CUBA]

TRIANA TEJADA, Luis Humberto, c/o COMERCIALIZADORA DE CARNES DEL PACIFICO LTDA., Cali, Colombia; DOB 27 Jul 1943; Cedula No. 4916206 (Colombia) (individual) [SDNT]

TRIMARK LTDA., Calle 69 No. 10A–53 of. 505, Bogota, Colombia; Carrera 31 No. 23A–68, Bogota, Colombia; NIT # 830117977–5 (Colombia) [SDNT]

TRINIDAD LTDA. Y CIA. S.C.S., Carrera 43 No. 4–47, Buenaventura, Colombia; NIT # 800009737–2 (Colombia) [SDNT]

TRINIDAD, Angelo Ramirez (a.k.a. TOMAS, Adrian; a.k.a. TRINIDAD Y RAMIREZ, Angelo; a.k.a. TRINIDAD, Abu Khalil; a.k.a. TRINIDAD, Calib; a.k.a. TRINIDAD, Kalib; a.k.a. TRINIDAD, Khalil; a.k.a. TRINIDAD, Khulil), 3111 Ma. Bautista, Punta, Santa Ana, Manila, Philippines; DOB 20 Mar 1978; POB Gattaran, Cagayan Province, Philippines; nationality Philippines (individual) [SDGT]

TRISTAN GIL, Luz Maria (a.k.a. TRISTAN GIL, Luz Mery), c/o LUZ MERY TRISTAN E.U., Cali, Colombia; Calle 16 No. 15–30, Cali, Colombia; c/o CREDISA S.A., Cali, Colombia; Carrera 122 No. 20–02, Cali, Colombia; Calle 5B 4 No. 37–125, Cali, Colombia; DOB 01 Apr 1963; POB Cali, Valle, Colombia; Cedula No. 31895852 (Colombia); Passport 31895852 (Colombia) (individual) [SDNT]

TRIVINO RODRIGUEZ, Elsa Yaneth, c/o AEROCOMERCIAL ALAS DE COLOMBIA LTDA., Bogota, Colombia; c/o CIA CONSTRUCTORA Y COMERCIALIZADORA DEL SUR LTDA., Bogota, Colombia; c/o GREEN ISLAND S.A., Bogota, Colombia; c/o INTERCONTINENTAL DE FINANCIACION AEREA S.A., Bogota, Colombia; c/o ASOCIACION TURISTICA INTERNACIONAL S.C.S., Bogota, Colombia; c/o INTERCONTINENTAL DE AVIACION S.A., Bogota, Colombia; Cedula No. 20484603 (Colombia) (individual) [SDNT]

TROBER, S.A. (a.k.a. TROVER, S.A.), Edificio Saldivar, Panama City, Panama [CUBA]

TRONCOSO POSSE, Jose Manuel, c/o AGROPECUARIA LINDARAJA S.A., Cali, Colombia; c/o INVERSIONES BRASILAR S.A., Bogota, Colombia; DOB 26 Nov 1953; POB Bogota, Colombia; citizen Colombia; nationality Colombia; Cedula No. 19233258 (Colombia); Passport AE297484 (Colombia) (individual) [SDNT]

TROPIC TOURS GMBH (a.k.a. TROPICANA TOURS GMBH), Lietzenburger Strasse 51, Berlin, Germany [CUBA]

TRUJILLO CAICEDO, Francisco Javiar 'Pacho', Carrera 76A No. 6–34 apt. 107, Cali, Colombia; Calle 13C No. 75–95 piso 2, Cali, Colombia; c/o COLOR 89.5 FM STEREO, Cali, Colombia; Calle 8 Oeste No. 24C–75 apt. 1501, Cali, Colombia; DOB 23 Nov 1960; Cedula No. 16264395 (Colombia) (individual) [SDNT]

TRUJILLO MOLINA, Maria Helena (a.k.a. TRUJILLO MOLINA, Maria Elena), c/o HOTEL LA CASCADA S.A., Girardot, Colombia; c/o INVERSIONES Y REPRESENTACIONES S.A., Medellin, Colombia; POB Colombia; Cedula No. 42875026 (Colombia) (individual) [SDNT]

TRUST IMPORT-EXPORT, S.A., Panama [CUBA]

TSAI, Hsein Tai (a.k.a. TSAI, ALEX H.T.), C/O TRANS MERITS CO. LTD, Taipei, Taiwan; C/O GLOBAL INTERFACE COMPANY INC., Taipei, Taiwan; DOB 8 Aug 1945; POB Tainan, Taiwan; Passport 131134049 (Taiwan); General Manager—GLOBAL INTERFACE COMPANY INC. (individual) [NPWMD]

TUAN, Shao Kuei (a.k.a. KRIANGKRAI, Tuangwitthayakun; a.k.a. SAO KUAY, Sae Tung; a.k.a. TUAN, Ming Cheng; a.k.a. ''MI CHUNG''; a.k.a. ''MING CHUNG''; a.k.a. ''TA KUEI''; a.k.a. ''TUAN SHAO KUEI''), Mong Kyawt, Shan, Burma; DOB 05 Nov 1950; National ID No. 5500900040846 (Thailand) (individual) [SDNTK]

TUFAIL, Mohammed (a.k.a. TUFAIL, S.M.; a.k.a. TUFAIL, Sheik Mohammed); DOB 5 May 1930; nationality Pakistan (individual) [SDGT]

TUFAYLI, Subhi; DOB 1947; POB Biqa Valley, Lebanon; Former Secretary General and Current Senior Figure of HIZBALLAH (individual) [SDT]

TUITO, Oded (a.k.a. MAMO, Eliyahu; a.k.a. REVIVO, Simon; a.k.a. TUITO, Daniel; a.k.a. TUITO, David; a.k.a. TVITO, Daniel; a.k.a. TVITO, Oded); DOB 27 Dec 1959; alt. DOB 29 Nov 1959; alt. DOB 12 Dec 1959; alt. DOB 25 Jul 1961; alt. DOB 27 Feb 1959; POB Israel (individual) [SDNTK]

TUN, Hla, Burma; DOB 11 Jul 1951; citizen Burma; nationality Burma; Major General, Minister of Finance and Revenue (individual) [BURMA]

TUN, Saw, Burma; DOB 8 May 1935; citizen Burma; nationality Burma; Major General, Minister of Construction (individual) [BURMA]

TUNGAMIRAI, Josiah; DOB 8 Oct 1948; Former Minister of State for Indigenization and Empowerment; Deceased (individual) [ZIMBABWE]

TUNISIAN COMBAT GROUP (a.k.a. GCT; a.k.a. GROUPE COMBATTANT TUNISIEN; a.k.a. JAMA'A COMBATTANTE TUNISIEN; a.k.a. JCT; a.k.a. TUNISIAN COMBATANT GROUP) [SDGT]

TURISMO HANSA S.A., Centro Comercial New Point Local 204, San Andres, Colombia; Avenida 4 Norte No. 19N–34 ofc. 302, Cali, Colombia; NIT # 860027780–4 (Colombia) [SDNT]

TWELFTH OCEAN; Vessel Registration Identification IMO 9209348 (vessel) [NPWMD]

U.I. INTERNATIONAL, United Kingdom [IRAQ2]

UDOMDET, Ronnayut (a.k.a. UDOMDECH, Ronnayuth), c/o SIAM NICE COMPANY LTD., Bangkok, Thailand; DOB 17 Jun 1967 (individual) [SDNTK]

UGANDA COMMERCIAL IMPEX, Kamaoja Area, Kanjokuu Street, Plot 22, Kampala, Uganda; P. O. Box 22709, Kampala, Uganda [DRCONGO]

UKSINI, Sami (a.k.a. UKSHINI, Sami); DOB 5 Mar 1963; POB Gjakova, Serbia and Montenegro (individual) [BALKANS]
ULSTER DEFENCE ASSOCIATION (a.k.a. ULSTER FREEDOM FIGHTERS), United Kingdom [SDGT]
ULVA FARM, Marondera, Zimbabwe [ZIMBABWE]
UMAR, Madhat Mursi Al-Sayyid; DOB 19 Oct 1953; POB Alexandria, Egypt; nationality Egypt (individual) [SDGT]
UMGUZA BLOCK FARM, Umguza, Zimbabwe [ZIMBABWE]
UMMAH TAMEER E-NAU (UTN) (a.k.a. FOUNDATION FOR CONSTRUCTION; a.k.a. NATION BUILDING; a.k.a. RECONSTRUCTION FOUNDATION; a.k.a. RECONSTRUCTION OF THE ISLAMIC COMMUNITY; a.k.a. RECONSTRUCTION OF THE MUSLIM UMMAH; a.k.a. UMMAH TAMEER I-NAU; a.k.a. UMMAH TAMIR E-NAU; a.k.a. UMMAH TAMIR I-NAU; a.k.a. UMMAT TAMIR E-NAU; a.k.a. UMMAT TAMIR-I-PAU), Street 13, Wazir Akbar Khan, Kabul, Afghanistan; 60-C, Nazim Ud Din Road, Islamabad F 8/4, Pakistan [SDGT]
UNIDAD CARDIOVASCULAR LTDA. (a.k.a. UNICA LTDA.), Calle 25 No. 5BN–08, Cali, Colombia; NIT # 800232679–8 (Colombia) [SDNT]
UNIDAS S.A., Avenida 7 Norte No. 23N–81, Cali, Colombia; Avenida 7 Norte No. 23–74, Cali, Colombia; NIT # 800080688–0 (Colombia) [SDNT]
UNION OF GOOD (a.k.a. 101 DAYS CAMPAIGN; a.k.a. CHARITY COALITION; a.k.a. COALITION OF GOOD; a.k.a. ETELAF AL-KHAIR; a.k.a. ETILAFU EL-KHAIR; a.k.a. I'TILAF AL-KHAIR; a.k.a. I'TILAF AL-KHAYR), P.O. Box 136301, Jeddah 21313, Saudi Arabia [SDGT]
UNION OF MYANMAR ECONOMIC HOLDINGS LIMITED (a.k.a. MYANMAR ECONOMIC HOLDINGS LIMITED; a.k.a. UMEH; a.k.a. UNION OF MYANMAR ECONOMIC HOLDINGS COMPANY LIMITED), 189–191 Maha Bandoola Road, Botahtaung Township, Yangon, Burma [BURMA]
UNIPAPEL S.A. (f.k.a. UNIPAPEL S.A. BOLSAS DE PAPEL PAPELES SOBRES), Carrera 52 No. 35–42, Medellin, Colombia; Calle 15 No. 26–400 Urbanizacion Industrial Acopi, Yumbo, Colombia; Carrera 49B No. 75–109 Ofc. 202, Barranquilla, Colombia; Autopista Cali-Yumbo, No. 26–400, Cali, Colombia; Carrera 122 no. 20–02, Cali, Colombia; Carrera 66 No. 7–31, Bogota, Colombia; NIT # 890301701–6 (Colombia) [SDNT]
UNITED FAIR AGENCIES, 1202 Carrian Center, 151 Gloucester Road, Wanchai, Hong Kong [CUBA]
UNITED SELF-DEFENSE FORCES OF COLOMBIA (a.k.a. AUC; a.k.a. AUTODEFENSAS UNIDAS DE COLOMBIA) [FTO] [SDGT] [SDNTK]
UNITED WA STATE ARMY (a.k.a. UNITED WA STATE PARTY; a.k.a. UWSA; a.k.a. UWSP) [SDNTK]
UNITY BANK, Bariman Avenue, P.O. Box 408, Khartoum, Sudan; Now part of BANK OF KHARTOUM GROUP [SUDAN]
URANGA ARTOLA, Kemen; DOB 25 May 1969; POB Ondarroa, Vizcaya Province, Spain; D.N.I. 30.627.290 (Spain); Member ETA (individual) [SDGT]
URANTIA SERVICES S.A., Avenida Jose Pardo 601, Lima, Peru; RUC # 20505575882 (Peru) [SDNTK]
URBANIZACIONES Y CONSTRUCCIONES LTDA. DE CALI (f.k.a. URBANIZACIONES Y CONSTRUCCIONES LTDA.), Carrera 4 No. 12–41 of. 1403, Cali, Colombia; NIT # 890306569–2 (Colombia) [SDNT]
URBANIZADORA ALTAVISTA INTERNACIONAL S.A. (f.k.a. TELNET S.A.; a.k.a. URBAVISTA), Calle 77 B No. 57—141, Ofc. 917, Barranquilla, Colombia; NIT # 802014697–3 (Colombia) [SDNT]
URDINOLA BETANCOURT, Maritza, c/o CAJA SOLIDARIA, Bogota, Colombia; c/o COPSERVIR LTDA., Bogota, Colombia; DOB 16 Nov 1962; Cedula No. 31893467 (Colombia); Passport 31893467 (Colombia) (individual) [SDNT]
URDINOLA GRAJALES, Ivan (a.k.a. URDINOLA GRAJALES, Jairo Ivan), c/o CONSTRUCTORA UNIVERSAL LTDA., Cali, Colombia; c/o INDUSTRIAS AGROPECUARIAS DEL VALLE LTDA., Cali, Colombia; c/o AGROINVERSORA URDINOLA HENAO Y CIA. S.C.S., Cali, Colombia; Hacienda La Lorena, Zarzal, Valle del Cauca, Colombia; Calle 52 No. 28E–30, Cali, Colombia; c/o INVERSIONES EL EDEN S.C.S., Cali, Colombia; c/o EXPLOTACIONES AGRICOLAS Y GANADERAS LA LORENA S.C.S., Cali, Colombia; DOB 1 Dec 1960; Cedula No. 94190353 (Colombia); Passport AD129003 (Colombia) (individual) [SDNT]
URDINOLA GRAJALES, Julio Fabio, Carrera 40 No. 5A–40, Cali, Colombia; c/o CONSTRUCTORA E INMOBILIARIA URVALLE CIA. LTDA., Cali, Colombia; Cedula No. 16801454 (Colombia) (individual) [SDNT]
UREY, Benoni; DOB 22 Jun 1957; Passport D–00148399 (Liberia); Former Commissioner of Maritime Affairs OF Liberia; Diplomatic (individual) [LIBERIA]
URIBE GONZALEZ, Jose Abelardo, c/o COMERCIALIZADORA INTERNACIONAL VALLE DE ORO S.A., Cali, Colombia; c/o SERVICIOS INMOBILIARIAS LTDA., Cali, Colombia; c/o INMOBILIARIA U.M.V. S.A., Cali, Colombia; c/o CONSULTORIA EMPRESARIAL ESPECIALIZADA LTDA., Cali, Colombia; Cedula No. 16647906 (Colombia) (individual) [SDNT]
URIBE URIBE, Miguel Angel, Calle Nevado de Toluca 845, Tijuana, Baja California, Mexico; c/o INMOBILIARIA ESTADO 29 S.A. DE C.V., Tijuana, Baja California, Mexico; c/o INMOBILIARIA LA PROVINCIA S.A. DE C.V., Tijuana, Baja California, Mexico; DOB 2 Aug 1957; POB Tijuana, Baja California, Mexico; C.U.R.P. # UIUM570802HBCRRG08 (Mexico) (individual) [SDNTK]
UTETE, Charles Manhamu; DOB 30 Oct 1938; Passport ZD002097 (Zimbabwe); Former Cabinet Secretary (individual) [ZIMBABWE]
UTHMAN, Omar Mahmoud (a.k.a. ABU ISMAIL; a.k.a. ABU UMAR, Abu Omar; a.k.a. AL-FILISTINI, Abu Qatada; a.k.a. TAKFIRI, Abu Umr; a.k.a. UMAR, Abu Umar; a.k.a. UTHMAN, Al-Samman; a.k.a. UTHMAN, Umar), London, United Kingdom; DOB 30 Dec 1960; alt. DOB 13 Dec 1960 (individual) [SDGT]
V.R. FRUIT COMPANY (a.k.a. BORISAT WI. A. FRUT CHAMKAT), 125 Mu 2, Tambon Mae Kha, Hang Dong district, Chiang Mai, Thailand [SDNTK]
VAAFI (a.k.a. IRAN VAAFI); Vessel Registration Identification IMO 9387786 (vessel) [NPWMD]
VALDIVIESO FONTAL, Diego, c/o VALLADARES LTDA., Cali, Colombia; DOB 13 Dec 1959; Cedula No. 16662362 (Colombia) (individual) [SDNT]
VALENCIA ARIAS, Jhon Gavy (a.k.a. VALENCIA ARIAS, John Gaby), Carrera 76 No. 6–200 102, Cali, Colombia; c/o INVERSIONES BETANIA LTDA., Cali, Colombia; Avenida 7N No. 17A–46, Cali, Colombia; c/o INVERSIONES EL PENON S.A., Cali, Colombia; Cedula No. 16741491 (Colombia) (individual) [SDNT]
VALENCIA ARIAS, Luis Fernando, c/o INVERSIONES BETANIA LTDA., Cali, Colombia; c/o INVERSIONES EL PENON S.A., Cali, Colombia; c/o INVERSIONES GEMINIS S.A., Cali, Colombia; DOB 24 Sep 1962; Cedula No. 71626881 (Colombia) (individual) [SDNT]
VALENCIA CORNELIO, Armando (a.k.a. CORNELIO VALENCIA, Armando; a.k.a. VALENCIA CABALLERO, Elias Armando; a.k.a. VALENCIA PENA, Armando); DOB 15 Jun 1954; alt. DOB 28 Nov 1959; POB Mexico (individual) [SDNTK]
VALENCIA DE JARAMILLO, Maria Diocelina, c/o AGROPECUARIA LA ROBLEDA S.A., Cali, Colombia; DOB 8 May 1959; Cedula No. 31162155 (Colombia) (individual) [SDNT]
VALENCIA FRANCO, Manuel, c/o GANADERIAS DEL VALLE S.A., Cali, Colombia (individual) [SDNT]
VALENCIA GALLEGO, Jesus Antonio, c/o DISMERCOOP, Cali, Colombia; DOB 9 Sep 1957; Cedula No. 16447249 (Colombia) (individual) [SDNT]
VALENCIA JAIME, Rafael Angel, c/o TEMPLE DEL PITIC S.A. DE C.V., Hermosillo, Sonora, Mexico; c/o AGRICOLA GAXIOLA S.A. DE C.V., Hermosillo, Sonora, Mexico; Ave Articulo 123 109, Hermosillo, Sonora 83287, Mexico; DOB 22 Jan 1968; POB Hermosillo, Sonora, Mexico; citizen Mexico; nationality Mexico; C.U.R.P. VAJR680122HSRLMF08 (Mexico); Passport 02260105052 (Mexico) (individual) [SDNTK]
VALENCIA MARIN, Libardo Elias; DOB 23 Mar 1946; POB Colombia; Cedula No. 8225623 (Colombia) (individual) [SDNT]
VALENCIA MARTINEZ, Alberto Alfredo, Avenida Hipodromo 19, Colonia Hipodromo, Tijuana, Baja California, Mexico; Blvd. Fundadores 0, Colonia El Rubi, Tijuana, Baja California, Mexico; Calle Lomas Altas 1480, Colonia Lomas de Agua Caliente, Tijuana, Baja California, Mexico; c/o INMOBILIARIA TIJUANA COSTA S.A. DE C.S., Tijuana, Baja California, Mexico; Calle Geiser 101, Colonia Colinas de Agua Caliente, Tijuana, Baja California, Mexico; Avenida I.T.R. 2207, Colonia Tecnologico, Tijuana, Baja California, Mexico; Calle Coronado 21760, Colonia Mesetas del Guaycura, Tijuana,

Baja California, Mexico; DOB 8 Apr 1949; POB Tijuana, Baja California, Mexico; C.U.R.P. # VAMA490408HBCLRL08 (Mexico); R.F.C. # VAMA–490408-C6A (Mexico) (individual) [SDNTK]

VALENCIA OBANDO, William, c/o GRAN MUELLE S.A., Buenaventura, Colombia; DOB 28 Oct 1969; Cedula No. 79245681 (Colombia); Passport 79245681 (Colombia) (individual) [SDNT]

VALENCIA TRUJILLO, Adela (a.k.a. VALENCIA DE MEDINA, Adela), c/o CREDISA S.A., Cali, Colombia; c/o COMPANIA DE FOMENTO MERCANTIL S.A., Cali, Colombia; c/o UNIDAS S.A., Cali, Colombia; Carrera 4 No. 11–45 Ofc. 503, Cali, Colombia; DOB 20 Oct 1954; POB Cali, Valle, Colombia; Cedula No. 31277251 (Colombia); Passport 31277251 (Colombia) (individual) [SDNT]

VALENCIA TRUJILLO, Agueda, c/o CREDISA S.A., Cali, Colombia; c/o COMPANIA DE FOMENTO MERCANTIL S.A., Cali, Colombia; c/o PARQUE INDUSTRIAL PROGRESO S.A., Yumbo, Colombia; Carrera 4 No. 11–45 Ofc. 506, Cali, Colombia; Carrera 5 No. 17–66, Cali, Colombia; c/o CONSTRUCCIONES PROGRESO DEL PUERTO S.A., Puerto Tejada, Colombia; Calle 9N A 3–37 Apt. 701, Cali, Colombia; c/o UNIDAS S.A., Cali, Colombia; DOB 10 Aug 1959; POB Cali, Valle, Colombia; Cedula No. 38943524 (Colombia); Passport 38943524 (Colombia) (individual) [SDNT]

VALENCIA TRUJILLO, Carmen Emilia (a.k.a. VALENCIA DE VICTORIA, Carmen Emilia), c/o UNIDAS S.A., Cali, Colombia; Carrera 37 No. 8–26, Cali, Colombia; c/o CREDISA S.A., Cali, Colombia; DOB 08 Apr 1952; POB Cali, Valle, Colombia; Cedula No. 31244070 (Colombia); Passport 31244070 (Colombia) (individual) [SDNT]

VALENCIA TRUJILLO, Guillermo, Carrera 66 No. 7–31, Bogota, Colombia; Calle 67 Norte No. 8–85, Cali, Colombia; Calle 93A No. 14–17 Ofc. 711, Bogota, Colombia; Calle 93N No. 14–20 Ofc. 601, Bogota, Colombia; DOB 19 Oct 1947; POB Cali, Valle, Colombia; Cedula No. 14942909 (Colombia); Passport 14942909 (Colombia) (individual) [SDNT]

VALENCIA TRUJILLO, Joaquin Mario, Carrera 122 No. 20–02, Cali, Colombia; Avenida 7 Norte No. 23N–81, Cali, Colombia; DOB 21 Aug 1957; POB Cali, Valle, Colombia; Cedula No. 16626888 (Colombia); Driver's License No. 76001000150900 (Colombia); Passport 16626888 (Colombia); alt. Passport AC030971 (Colombia) (individual) [SDNT]

VALENCIA, Reynel (a.k.a. VALENCIA, Reinel), c/o INMOBILIARIA U.M.V. S.A., Cali, Colombia; c/o GANADERIAS DEL VALLE S.A., Cali, Colombia; c/o COMERCIALIZADORA INTERNACIONAL VALLE DE ORO S.A., Cali, Colombia; DOB 19 Nov 1954; Cedula No. 16258610 (Colombia) (individual) [SDNT]

VALERO JIMENEZ, Alejandro, c/o ADMINISTRACION DE RECURSOS FINANCIEROS E.U., Cali, Colombia; c/o PROMOTORES DE BIENES RAICES S.A., Cali, Colombia; c/o UNIDAD CARDIOVASCULAR LTDA., Cali, Colombia; 826 SW Canary Terrace, Port St. Lucie, FL 34953; Transversal 18 No. 102–42 apto. 401, Bogota, Colombia; DOB 25 Oct 1967; POB Cali, Colombia; Cedula No. 16746340 (Colombia); Passport P059298 (Colombia) (individual) [SDNT]

VALERO JIMENEZ, Luis Hernan, Spain; Paseo Murviedro Monte Picayo, No. 14, Pucol, Valencia, Spain; Avenida 4N No. 19N–34, Cali, Colombia; c/o VALERO Y ASOCIADOS GABINETE JURIDICO S.L., Valencia, Spain; DOB 22 Sep 1965; Cedula No. 16723237 (Colombia); Passport 16723237 (Colombia) (individual) [SDNT]

VALERO SANCHEZ, Francisco Javier, c/o UNIDAD CARDIOVASCULAR LTDA., Cali, Colombia; c/o PROMOTORES DE BIENES RAICES S.A., Cali, Colombia; c/o ASESORIAS OCUPACIONALES LTDA., Cali, Colombia; Cedula No. 2436976 (Colombia) (individual) [SDNT]

VALERO Y ASOCIADOS GABINETE JURIDICO S.L., Paseo Alameda, 60, Valencia 46023, Spain; C.I.F. B97393029 (Spain) [SDNT]

VALETTA SHIPPING CORPORATION, c/o EMPRESA DE NAVEGACION MAMBISA, Apartado 543, San Ignacio 104, Havana, Cuba [CUBA]

VALFAJR 8TH SHIPPING LINE CO SSK (a.k.a. SHERKAT SAHAMI KHASS KESHTIRANI VALFAJR 8TH; a.k.a. VAL FAJR HASHT SHIPPING CO; a.k.a. VAL FAJR-E–8 SHIPPING COMPANY; a.k.a. VALFAJRE EIGHT SHIPPING CO; a.k.a. VESC), Abyar Alley, Corner of Shahid Azodi St. & Karim Khan Zand Ave., Tehran, Iran; Shahid Azodi St., Karimkhan Zand Ave., Abiar Alley, P.O. Box 4155, Tehran, Iran [NPWMD]

VALLADARES LTDA. (f.k.a. AGROPECUARIA BETANIA LTDA.), Carrera 61 No. 11–58, Cali, Colombia; Calle 70N No. 14–31, Cali, Colombia; NIT # 890329123–0 (Colombia) [SDNT]

VALLE COMUNICACIONES LTDA. (a.k.a. VALLECOM), Carrera 60 No. 2A–107, Cali, Colombia [SDNT]

VALLE DE ORO S.A., Pollo Tanrico Km 17 Recta Cali-Palmira, Palmira, Colombia; Cali, Colombia; NIT # 890331067–2 (Colombia) [SDNT]

VALLEJO FRANCO, Inigo; DOB 21 May 1976; POB Bilbao (Vizcaya Province), Spain; D.N.I. 29.036.694; member ETA (individual) [SDGT]

VALOR LTDA. S.C.S., Carrera 4 No. 17–20, Popayan, Colombia; NIT # 800009030–4 (Colombia) [SDNT]

VALORES CORPORATIVOS ESPANOLES S.L., Calle Zurbano 76, 7, Madrid, Madrid, Spain; Calle Consuegra 3, 28036 Madrid, Madrid, Spain; C.I.F. B81681447 (Spain) [SDNT]

VALORES CORPORATIVOS S.A. (a.k.a. VALORCORP S.A.), Transversal 9 No. 55–97 Of. 401, Bogota, Colombia; NIT # 830015542–7 (Colombia) [SDNT]

VALORES MOBILIARIOS DE OCCIDENTE S.A., Avenida Colombia No. 2–45, Cali, Colombia; Carrera 1 No. 2–45, Cali, Colombia; Bogota, Colombia; Avenida 6 Norte No. 23DN–16, Cali, Colombia; Carrera 100 No. 11–90 of. 602, Cali, Colombia; NIT # 800249439–1 (Colombia) [SDNT]

VALPARK, S.A. DE C.V., Paseo de los Heroes y Sanchez Taboada, CP 22320, Tijuana, Baja California, Mexico; Avenida David Alfaro Siquieiros 2789, Ofc. 201A, Colonia Zona Rio, Tijuana, Baja California, Mexico [SDNTK]

VANOY MURILLO, Ramiro (a.k.a. VANOY RAMIREZ, Ramiro; a.k.a. ''CUCO''), Carrera 86 No. 13B–89, Apt. 302F, Cali, Colombia; DOB 31 Mar 1948; POB Yacopi, Cundinamarca, Colombia; citizen Colombia; nationality Colombia; Cedula No. 462653 (Colombia) (individual) [SDNT]

VARELA SERNA, Carlos Heneris (a.k.a. ''COLITAS''), c/o COOPERATIVA DE SERVICIO DE TRANSPORTE DE CARGA DE COLOMBIA LTDA., Barranquilla, Colombia; c/o TRANSPORTES MICHAEL LTDA., Barranquilla, Colombia; c/o CENTRO DE BELLEZA SHARY VERGARA, Barranquilla, Colombia; DOB 11 Jan 1956; POB Cali, Colombia; Cedula No. 16632290 (Colombia) (individual) [SDNT]

VARELA, Wilber (a.k.a. GARCIA GARCIA, Jairo; a.k.a. GARCIA VARELA, Wilber Alirio; a.k.a. VARELA FAJARDO, Wilber Alirio; a.k.a. VARELA, Fredy; a.k.a. VARELA, Wilber Alirio; a.k.a. VARELA, Wilmer; a.k.a. ''DON JAIRO''; a.k.a. ''JABON''), Carrera 85 No. 14A–57, Cali, Colombia; Calle 11 No. 4–442, Ofc. 722, Cali, Colombia; Calle 22 No. 15–53, Armenia, Quindio, Colombia; Calle 30 No. 23B–22, Cali, Colombia; DOB 06 Nov 1954; POB Roldanillo, Valle, Colombia; alt. POB Armenia, Quindio, Colombia; citizen Colombia; Cedula No. 16545384 (Colombia); alt. Cedula No. 16891223 (Colombia); Passport AF427757 (Colombia) (individual) [SDNT]

VARGAS ALBA, Cesar Augusto, c/o COMERCIALIZADORA COLOMBIAN MONEY EXCHANGE LTDA., Bogota, Colombia; DOB 27 Aug 1969; POB Colombia; citizen Colombia; nationality Colombia; Cedula No. 79578481 (Colombia); Passport AI980101 (Colombia) (individual) [SDNTK]

VARGAS ALBA, Jorge Leandro (a.k.a. ''EL CANOSO''), c/o COMERCIALIZADORA COLOMBIAN MONEY EXCHANGE LTDA., Bogota, Colombia; DOB 17 Jan 1968; POB Colombia; citizen Colombia; nationality Colombia; Cedula No. 17642230 (Colombia); Passport AI263725 (Colombia) (individual) [SDNTK]

VARGAS ARIAS, Jorge Eliecer, Calle 165 No. 25–65 Apartamento 503, Bogota, Colombia; c/o COMERCIALIZADORA COLOMBIAN MONEY EXCHANGE LTDA., Bogota, Colombia; DOB 22 Nov 1952; POB Colombia; citizen Colombia; nationality Colombia; Cedula No. 4894606 (Colombia); Passport 4894606 (Colombia) (individual) [SDNTK]

VARGAS DUQUE, Adriana, c/o PROSALUD Y BIENESTAR S.A., Cali, Colombia; c/o PROSPECTIVA E.U., Cali, Colombia; c/o DISTRIBUIDORA SANAR DE COLOMBIA S.A., Cali, Colombia; c/o COMERCIALIZADORA INTERTEL S.A., Cali, Colombia; DOB 20 May 1974; Cedula No. 66902221 (Colombia); Passport 66902221 (Colombia) (individual) [SDNT]

VARGAS GARCIA, Carlos Alberto, Quito, Ecuador; c/o DISTRIBUIDORA DE DROGAS CONDOR LTDA., Bogota,

Colombia; c/o RIONAP COMERCIO Y REPRESENTACIONES S.A., Quito, Ecuador; Cedula No. 4578620 (Colombia) (individual) [SDNT]

VARGAS LOPEZ, Gustavo Adolfo, c/o INDUSTRIA MADERERA ARCA LTDA., Cali, Colombia; c/o AGROPECUARIA LA ROBLEDA S.A., Cali, Colombia; c/o COLOMBIANA DE CERDOS LTDA., Pereira, Colombia; c/o MATADERO METROPOLITANO LTDA., Pereira, Colombia; c/o INVERSIONES VILLA PAZ S.A., Cali, Colombia; DOB 3 Nov 1955; Cedula No. 6457925 (Colombia) (individual) [SDNT]

VARGAS PERDOMO, Eugenio (a.k.a. DORNELES DE MENEZES, Francisco; a.k.a. ''CARLOS BOLAS''); DOB 19 Nov 1969; POB Puerto Lopez, Meta, Colombia; Cedula No. 17344616 (Colombia) (individual) [SDNTK]

VARGAS RUEDA, Nelson (a.k.a. ''ALFREDO''; a.k.a. ''HUGO''); DOB 27 Apr 1970; Cedula No. 77130763 (Colombia) (individual) [SDNTK]

VARGAS SOLER, Sandra Milena, c/o COMERCIALIZADORA COLOMBIAN MONEY EXCHANGE LTDA., Bogota, Colombia; DOB 05 Jan 1980; POB Colombia; citizen Colombia; nationality Colombia; Cedula No. 40047576 (Colombia) (individual) [SDNTK]

VARGAS VARGAS, Flor Yadira, c/o ADMACOOP, Bogota, Colombia; c/o CODISA, Bogota, Colombia; DOB 11 Jul 1971; Cedula No. 52584018 (Colombia); Passport 52584018 (Colombia) (individual) [SDNT]

VARGAS VASQUEZ, Jorge Alberto, c/o DISTRIEXPORT S.A., Bogota, Colombia; c/o AMERICANA DE COSMETICOS S.A., Bogota, Colombia; DOB 30 Jun 1960; Cedula No. 19401630 (Colombia); Passport 19401630 (Colombia) (individual) [SDNT]

VASIC, Dragomir, Bosnia and Herzegovina; DOB 1964; POB Brnjica, Bosina-Herzegovina (individual) [BALKANS]

VASILJEVIC, Mitar; DOB 25 Aug 1954; POB Durevici, Bosnia-Herzegovina; ICTY indictee (individual) [BALKANS]

VASQUES, Oscar D. (a.k.a. VAZQUEZ, Oscar D.), Panama (individual) [CUBA]

VASQUEZ DIAZ, Augusto de Jesus, c/o FLORIDA SOCCER CLUB S.A., Medellin, Colombia; POB Colombia; Cedula No. 3333064 (Colombia) (individual) [SDNT]

VAZ, Jose, 20 Ironmonger Lane, London EC2V 8EY, United Kingdom; Managing Director, Havana International Bank (individual) [CUBA]

VEGA SANCHEZ, Jose Raul, c/o TEMPLE DEL PITIC S.A. DE C.V., Hermosillo, Sonora, Mexico; c/o AGRICOLA GAXIOLA S.A. DE C.V., Hermosillo, Sonora, Mexico; c/o INMUEBLES SIERRA VISTA S.A. DE C.V., Hermosillo, Sonora, Mexico; DOB 19 Oct 1956; POB Cananea, Sonora, Mexico; citizen Mexico; nationality Mexico; C.U.R.P. VEXR561019HSRGXL05 (Mexico); alt. C.U.R.P. VESR561019HSRGNL09 (Mexico) (individual) [SDNTK]

VEGA, Rosalba, c/o GLAJAN S.A., Bogota, Colombia; c/o GENERICOS ESPECIALES S.A., Bogota, Colombia; c/o BONOMERCAD S.A., Bogota, Colombia; c/o DECAFARMA S.A., Bogota, Colombia; c/o PATENTES MARCAS Y REGISTROS S.A., Bogota, Colombia; c/o SHARPER S.A., Bogota, Colombia; DOB 22 Sep 1955; Cedula No. 21132758 (Colombia); Passport 21132758 (Colombia) (individual) [SDNT]

VELARDE SARABIA, Antonio, c/o COMERCIALIZADORA TOQUIN, S.A. DE. C.V., Guadalajara, Jalisco, Mexico; c/o COMERCIAL JOANA, S.A. DE C.V., Guadalajara, Jalisco, Mexico; Calle Hidalgo No. 537 Oriente, Col. Centro, Culiacan, Sinaloa, Mexico; c/o COMERCIAL DOMELY, S.A. DE C.V., Toluca, Mexico, Mexico; DOB 27 Oct 1977; citizen Mexico; nationality Mexico; R.F.C. VESA771027B50 (Mexico) (individual) [SDNTK]

VELASQUEZ, Miguel Angel, c/o ADMINISTRADORA DE SERVICIOS VARIOS CALIMA S.A., Cali, Colombia; c/o ASESORIAS ECONOMICAS MUNOZ SANTACOLOMA E.U., Cali, Colombia; c/o CHAMARTIN S.A., Cali, Colombia; Cedula No. 16305012 (Colombia); Passport 16305012 (Colombia) (individual) [SDNT]

VELAZQUEZ HERNANDEZ, Juan Gabriel, Callejon Revolucion 1050, Colonia Zona Centro, Tijuana, Baja California, Mexico; c/o GS PLUS CONSULTORES, S.A. DE C.V., Tijuana, Baja California, Mexico; DOB 20 Mar 1975; POB Tijuana, Baja California, Mexico (individual) [SDNTK]

VELEZ MONTES, William, c/o INVERSIONES Y COMERCIALIZADORA INCOM LTDA., Cali, Colombia; c/o INTERCONTINENTAL DE AVIACION S.A., Bogota, Colombia; Calle 92 No. 19–70 Apt. 304, Bogota, Colombia; DOB 24 May 1943; POB Tulua, Valle, Colombia; Cedula No. 17086144 (Colombia); Passport PE019274 (Colombia); alt. Passport PE029301 (Colombia); alt. Passport AF870847 (Colombia) (individual) [SDNT]

VELEZ RENGIFO, Piedad, c/o INTERCONTINENTAL DE AVIACION S.A., Bogota, Colombia; Carrera 15 No. 127A–33 Apt. 605, Bogota, Colombia; c/o DESARROLLOS AGROINDUSTRIALES S.A., Bogota, Colombia; Avenida El Logo Calle Chiminangos Casa No. 3, Cali, Colombia; c/o ACCIRENT S.A., Bogota, Colombia; DOB 22 Oct 1959; POB Cali, Colombia; Cedula No. 31835778 (Colombia); Passport AD217712 (Colombia); alt. Passport AF314384 (Colombia) (individual) [SDNT]

VENECIA INMOBILIARIA QUILICHAO S.A. & CIA S.C.A. (f.k.a. INVERSIONES RENGIFO E HIJOS LTDA.), Avenida 4N No, 6N–61, Ofc. 510, Cali, Colombia; NIT # 800026554–3 (Colombia) [SDNT]

VERA ROSAS, Gonzalo, c/o FARMA 3.000 LIMITADA, Barranquilla, Colombia; DOB 19 Sep 1968; Cedula No. 79136661 (Colombia); Passport 79136661 (Colombia) (individual) [SDNT]

VERANILLO DIVE CENTER LTDA. (a.k.a. CLUB DE PESCA VERANILLO), Via 40 No. 67–42, Barranquilla, Colombia; NIT # 802008393–5 (Colombia) [SDNT]

VEST SPECTRUM (S) PTE. LTD., 9 Haig Avenue 438864, Singapore; 704 Bedok Reservoir Road 470704, Singapore; Registration ID 199306257C (Singapore) issued 23 Sep 1993 [SDNTK]

VESTIMENTA J Y J S. DE H., Calle 78 No. 53–70, Local 112, Barranquilla, Colombia; NIT # 802001338–8 (Colombia) [SDNT]

VIACON INTERNATIONAL, INC., Apartment 7B Torre Mar Building, Punta Paitilla Area, Panama City, Panama [CUBA]

VIACON INTERNATIONAL, INC., France Field, Colon Free Zone, Panama [CUBA]

VIAJES GUAMA, S.A., Spain [CUBA]

VIAJES MERCURIO LTDA., Carrera 3 No. 10–02 Local 113, Cali, Colombia [SDNT]

VIAL COMPANY, DE [LIBERIA]

VICTORIA CASTANO, Alvaro, Carrera 3A Norte No. 42A–43, Cali, Colombia; c/o CREDISA S.A., Cali, Colombia; Cedula No. 14933828 (Colombia); Passport 14933828 (Colombia) (individual) [SDNT]

VICTORIA POTES, Nestor Raul, c/o INVERSIONES VILLA PAZ S.A., Cali, Colombia; c/o AGROPECUARIA LA ROBLEDA S.A., Cali, Colombia; Calle 70N No. 14–31, AA26397, Cali, Colombia; c/o AGROPECUARIA BETANIA LTDA., Cali, Colombia; c/o INDUSTRIA AVICOLA PALMASECA S.A., Cali, Colombia; c/o ADMINISTRACION INMOBILIARIA S.A., Cali, Colombia; c/o PROHUEVO DE COLOMBIA LTDA., Cali, Colombia; c/o GANADERIAS DEL VALLE S.A., Cali, Colombia; DOB 25 Nov 1951; Cedula No. 16247701 (Colombia) (individual) [SDNT]

VICTORIA, Mercedes, c/o INVERSIONES GEELE LTDA., Bogota, Colombia; c/o COLOR 89.5 FM STEREO, Cali, Colombia; c/o COMPAX LTDA., Cali, Colombia; c/o LABORATORIOS KRESSFOR, Bogota, Colombia (individual) [SDNT]

VIEDMA ABONCE, Marisol, Calle 10B No. 14A–90 Manz. C Casa 14, Cartago, Valle, Colombia; c/o ALMACEN Y COMPRAVENTA LOS 3 OROS, Cartago, Valle, Colombia; c/o MOTEL MOMENTOS E.U., Cartago, Valle, Colombia; DOB 30 Mar 1970; Cedula No. 31415437 (Colombia) (individual) [SDNT]

VILA MICHELENA, Fermin; DOB 12 Mar 1970; POB Irun, Guipuzcoa Province, Spain; D.N.I. 15.254.214 (Spain); Member ETA (individual) [SDGT]

VILLA DE ARTE S. DE H. (a.k.a. VILLA D'ARTE), Aereo Apartado 51881, Barranquilla, Colombia; Carrera 54 No. 74–79, Barranquilla, Colombia; NIT # 800125346–2 (Colombia) [SDNT]

VILLA OSPINA, Mauricio, c/o CHAMARTIN S.A., Cali, Colombia; c/o ADMINISTRADORA DE SERVICIOS VARIOS CALIMA S.A., Cali, Colombia; Cedula No. 16365834 (Colombia); Passport 16365834 (Colombia) (individual) [SDNT]

VILLA VINASCO, Armando Alonso, Miranda, Cauca, Colombia; Calle Angel Larra, 4, Madrid 28027, Spain; DOB 24 Oct 1960; Cedula No. 16645357 (Colombia) (individual) [SDNT]

VILLADA ZUNIGA, Elmer, Calle 15 No. 20–10, Cali, Colombia; c/o TAURA S.A., Cali, Colombia; Cedula No. 14988902 (Colombia) (individual) [SDNT]

VILLANUEVA MADRID, Mario Ernesto; DOB 2 Jul 1949; POB Quintana Roo, Mexico (individual) [SDNTK]

VILLARO LTDA., Calle 69 No. 10A–53 of. 502, Bogota, Colombia; NIT # 830117443–4 (Colombia) [SDNT]

VILLAROSA INVESTMENTS CORPORATION, Panama City, Panama;

C.R. No. 312563/48824/0058 (Panama) [SDNT]

VILLAROSA INVESTMENTS FLORIDA, INC., 780 NW Le Jeune Road, Suite 516, Miami, FL 33126; 780 NW 42nd Avenue, Suite 516, Miami, FL 33126; 9100 South Dadeland Boulevard, Suite 912, Miami, FL 33156; US FEIN 650439600 (United States) [SDNT]

VILLASENOR COVARRUBIAS, Jorge Miguel, Av. de las Rocas 1548, Fracc. Playas de Tijuana, Tijuana, Baja California, Mexico; c/o MULTISERVICIOS BRAVIO, S.A. DE C.V., Tijuana, Baja California, Mexico; Prv. Montecarlo 12106, Colonia Res. Agua Caliente, Tijuana, Baja California CP 22480, Mexico; Av. Via Rapida S/N, Colonia Zona Rio, Tijuana, Baja California, Mexico; DOB 31 May 1948; POB Distrito Federal, Mexico; R.F.C. VICJ–480531-RJ7 (Mexico) (individual) [SDNTK]

VILLEGAS ARIAS, Maria Deisy (a.k.a. VILLEGAS ARIAS, Maria Deicy), c/o CONSTRUEXITO S.A., Cali, Colombia; c/o CONCRETOS CALI S.A., Cali, Colombia; Calle 66 No. 1A–6 51, Cali, Colombia; c/o GANADERIAS DEL VALLE S.A., Cali, Colombia; c/o SOCOVALLE LTDA., Cali, Colombia; c/o INDUSTRIA MADERERA ARCA LTDA, Cali, Colombia; DOB 16 Jul 1961; Cedula No. 31200871 (Colombia) (individual) [SDNT]

VILLEGAS BOLANOS, Silver Amido, c/o GANADERIAS DEL VALLE S.A., Cali, Colombia; c/o CONSULTORIA EMPRESARIAL ESPECIALIZADA LTDA., Cali, Colombia; c/o CONCRETOS CALI S.A., Cali, Colombia; c/o ADMINISTRACION INMOBILIARIA BOLIVAR S.A., Cali, Colombia; DOB 15 Aug 1954; Cedula No. 10480869 (Colombia) (individual) [SDNT]

VILLOTA GALVIS, Eliseo Fernando, c/o FARMACOOP, Bogota, Colombia; c/o CODISA, Bogota, Colombia; c/o JOMADA DE COSTA RICA S.A., San Jose, Costa Rica; c/o LABORATORIOS KRESSFOR DE COLOMBIA S.A., Bogota, Colombia; c/o MATSUM S.A., Bogota, Colombia; DOB 13 May 1945; Cedula No. 17118703 (Colombia); Passport 17118703 (Colombia) (individual) [SDNT]

VINALES TOURS, Mexico City, Mexico [CUBA]

VINALES TOURS, Cancun, Mexico [CUBA]

VINALES TOURS, Guadalajara, Mexico [CUBA]

VINALES TOURS, Roma, Mexico [CUBA]

VINALES TOURS, Monterey, Mexico [CUBA]

VINCK, Patricia (a.k.a. VINCK, Souraya P.), 69 Rue des Bataves, 1040 Etterbeek, Brussels, Belgium; Vaatjesstraat, 29, 2580 Putte, Belgium; DOB 04 Jan 1965; POB Antwerp, Belgium (individual) [SDGT]

VIOLET NAVIGATION CO. LTD., c/o EMPRESA DE NAVEGACION MAMBISA, Apartado 543, San Ignacio 104, Havana, Cuba [CUBA]

VISCAYA LTDA. (a.k.a. VIZCAYA LTDA.), Km 7 Via Cartago-Obando, Hacienda El Vergel, Cartago, Colombia; Carrera 4 No. 12–20 of. 206, Cartago, Valle, Colombia; Carrera 3 No. 11–99, Cartago, Valle, Colombia; NIT # 800054357–8 (Colombia) [SDNT]

VOL PHARMACYA LTDA. (a.k.a. VOL PHARMACIA LTDA.), Calle 12 No. 8–34/36, Cucuta, Colombia; NIT # 807005617–4 (Colombia) [SDNT]

VRACAR, Milenko, Bosnia and Herzegovina; DOB 15 May 1956; POB Nisavici, Prijedor, Bosnia-Herzegovina (individual) [BALKANS]

VUELA PERU S.A.C., Avenida Bolognesi 125, Dpto. 1602, Lima, Peru; RUC # 20508991879 (Peru) [SDNTK]

VUKOVIC, Zoran; DOB 6 Sep 1955; POB Brusna, Bosnia-Herzegovina; ICTY indictee (individual) [BALKANS]

WAAD PROJECT (a.k.a. AL-WAAD AL-SADIQ; a.k.a. 'MASHURA WAAD LAADAT AL-AAMAR; a.k.a. WAAD; a.k.a. WA'AD AS SADIQ; a.k.a. WAAD COMPANY; a.k.a. WAAD FOR REBUILDING THE SOUTHERN SUBURB; a.k.a. WAAD PROJECT FOR RECONSTRUCTION; a.k.a. WA'D PROJECT; a.k.a. WAED; a.k.a. WA'ED ORGANIZATION; a.k.a. WA'ID COMPANY), Harat Hurayk, Lebanon; Beirut, Lebanon; Telephone No. 009613679153; Telephone No. 009613380223; Telephone No. 03889402; Telephone No. 03669916 [SDGT]

WAD MADANI DUTY FREE SHOP, Wad Madani, Sudan [SUDAN]

WADDANI, Habib, Via unica Borighero n.1, San Donato M.se (MI), Italy; DOB 10 Jun 1970; POB Tunis, Tunisia; nationality Tunisia; Italian Fiscal Code WDDHBB70H10Z352O; Passport L550681 issued 23 Sep 1997 expires 22 Sep 2002 (individual) [SDGT]

WADENA SHIPPING CORPORATION, c/o EMPRESA DE NAVEGACION MAMBISA, Apartado 543, San Ignacio 104, Havana, Cuba [CUBA]

WAFA HUMANITARIAN ORGANIZATION (a.k.a. AL WAFA; a.k.a. AL WAFA ORGANIZATION; a.k.a. WAFA AL-IGATHA AL-ISLAMIA) [SDGT]

WAFRA CHEMICALS & TECHNO-MEDICAL SERVICES LIMITED, Khartoum, Sudan [SUDAN]

WAFRA PHARMA LABORATORIES (a.k.a. WAFRA PHARMACEUTICALS; a.k.a. WAFRAPHARMA LABORATORIES), Main Street, P.O. Box 2032, Omdurman, Sudan; E-mail Address waframed@sudanmail.net (Sudan) [SUDAN]

WAHHAB, Wi'am (a.k.a. WAHAB, Wiyam; a.k.a. WAHHAB, Wiam; a.k.a. WIHAB, Wi'am; a.k.a. WIHAB, Wiyam); DOB 1964; POB Al-Jahiliya, Shuf Mountains, Lebanon (individual) [LEBANON]

WALDENBERG, AG (f.k.a. AL TAQWA TRADE, PROPERTY AND INDUSTRY; f.k.a. AL TAQWA TRADE, PROPERTY AND INDUSTRY COMPANY LIMITED; f.k.a. AL TAQWA TRADE, PROPERTY AND INDUSTRY ESTABLISHMENT; f.k.a. HIMMAT ESTABLISHMENT), c/o Asat Trust Reg., Altenbach 8, Vaduz 9490, Liechtenstein; Via Posero, 2, 22060 Compione d'Italia, Italy [SDGT]

WAN MIN, Wan Mat (a.k.a. WAN MIN, bin Wan Mat); DOB 23 Sep 1960; POB Malaysia; nationality Malaysia (individual) [SDGT]

WAU FRUIT AND VEGETABLE CANNING FACTORY, P.O. Box 110, Wau, Sudan [SUDAN]

WEI, Hsueh Kang (a.k.a. CHARNCHAI, Chiwinnitipanya; a.k.a. CHEEWINNITTIPANYA, Prasit; a.k.a. CHIVINNITIPANYA, Prasit; a.k.a. CHIWINNITIPANYA, Charnchai; a.k.a. PRASIT, Cheewinnittipanya; a.k.a. PRASIT, Chivinnitipanya; a.k.a. WEI, Shao-Kang; a.k.a. WEI, Sia-Kang; a.k.a. WEI, Xuekang); DOB 29 Jun 1952; alt. DOB 29 May 1952; Passport E091929 (Thailand); alt. Passport Q081061 (Thailand) (individual) [SDNTK]

WEI, Hsueh Lung (a.k.a. APHICHART, Cheewinprapasi; f.k.a. HAI HSING, Sae Wei; a.k.a. HKIM, Aik Hsam; a.k.a. SOONTHRON, Cheewinprapasri; a.k.a. SUNTHORN, Chiwinpraphasi; a.k.a. ''CHAIRMAN KEUN''; a.k.a. ''KEUN DONG''; a.k.a. ''KEUN SEU CHANG''; a.k.a. ''TI JUNG''; a.k.a. ''WEI HSUEH LUNG''), 409/4, Soi Wachiratham Sathit 34, Khwaeng Bang Chak, Khet Phra Khanong, Bangkok, Thailand; Na Lot, Shan, Burma; c/o DEHONG THAILONG HOTEL CO., LTD., Yunnan Province, China; Pang Poi, Shan, Burma; DOB 1936; POB Chiang Rai, Thailand; National Foreign ID Number 5570700010951 (Thailand); Passport B265235 (Thailand) (individual) [SDNTK]

WEI, Hsueh Yuan (a.k.a. PHAIROJ, Samoechainuek; a.k.a. PHAIROT, Mopokoo; a.k.a. PHITAK, Samoechainuek; a.k.a. WEI, Hsueh Ying; a.k.a. WEI, Hsueh Yun; a.k.a. ''WEI HSUEH YING''; a.k.a. ''WEI HSUEH YUAN''), Huay Aw, Shan, Burma; DOB 1952; alt. DOB 1956; National ID No. 3570900338725 (Thailand) (individual) [SDNTK]

WEST ISLAND SHIPPING CO. LTD., c/o UNION MARITIMA PORTUARIA, 9-Piso, Apartado B, Esquina Cuarteles y Pena Pobre 60, Havana Vieja, Havana, Cuba [CUBA]

WEST ISLANDS (vessel) [CUBA]

WESTBOUND LTD, P.O. Box 399, 26 Main Street, Gibraltar, United Kingdom [LIBERIA]

WHALE SHIPPING LTD., c/o Government of Iraq, State Organization of Ports, Maqal, Basrah, Iraq [IRAQ2]

WHITE NILE BATTERY COMPANY, Khartoum, Sudan [SUDAN]

WHITE NILE BREWERY, P.O. Box 1378, Khartoum, Sudan [SUDAN]

WHITE NILE TANNERY, P.O. Box 4078, Khartoum, Sudan [SUDAN]

WHITE SWAN SHIPPING CO. LTD., c/o EMPRESA DE NAVEGACION CARIBE, Edificio Lonja del Comercio, Lamparilla 2, Caja Postal 1784, Havana 1, Cuba [CUBA]

WIN, Kyaw; DOB 3 Jan 1944; citizen Burma; nationality Burma; Lieutenant-General; Chief of Bureau of Special Operation 2; Member, State Peace and Development Council (individual) [BURMA]

WIN, Nyan; DOB 22 Jan 1953; citizen Burma; nationality Burma; Major General; Minister of Foreign Affairs (individual) [BURMA]

WIN, Soe; DOB 10 May 1947; citizen Burma; nationality Burma; Lieutenant-General; Prime Minister; Member, State Peace and Development Council (individual) [BURMA]

WISSER, Gerhard; DOB 2 Jul 1939; POB Lohne, Germany; nationality Germany; Passport 3139001443 (Germany) (individual) [NPWMD]

WONG, Moon Chi (a.k.a. CHAN, Shu Sang; a.k.a. CHAN, Shusang; a.k.a. CHEN, Bing

Shen; a.k.a. CHEN, Bingshen; a.k.a. CHEN, Shu Sheng; a.k.a. CHEN, Shusheng; a.k.a. DU, Yu Rong; a.k.a. DU, Yurong; a.k.a. HU, Chi Shu; a.k.a. HU, Chishu; a.k.a. HUANG, Man Chi; a.k.a. HUANG, Manchi; a.k.a. WONG, Kam Kong; a.k.a. WONG, Kamkong; a.k.a. WONG, Moonchi; a.k.a. WONG, Mun Chi; a.k.a. WONG, Munchi; a.k.a. WU, Chai Su; a.k.a. WU, Chaisu; a.k.a. ZHANG, Jiang Ping; a.k.a. ZHANG, Jiangping; a.k.a. ''CHI BANG''), Hong Kong, China; DOB 18 Mar 1961; alt. DOB 21 Apr 1945; alt. DOB 08 Aug 1958; alt. DOB 03 Aug 1958; alt. DOB 08 Feb 1955; alt. DOB 25 Jan 1947; POB China; citizen China; alt. citizen Cambodia; nationality China; British National Overseas Passport 750200421 (United Kingdom); National ID No. D489833(9) (Hong Kong); Passport 611657479 (China); alt. Passport 2355009C (China) (individual) [SDNTK]

WORLD LINE SYSTEM S.A., Calle 46 No. 45A–38, Palmira, Valle, Colombia; Avenida 6 Norte No. 23N–85, Cali, Colombia; NIT # 815003764–9 (Colombia) [SDNT]

WORLD TRADE LTDA., Carrera 8 No. 16–77, Ibague, Colombia; NIT # 809008109–5 (Colombia) [SDNT]

WORLD WORKING COMERCIALIZADORA INTERNACIONAL S.A. (f.k.a. C.I. GLOS'S INTERNATIONAL S.A.; a.k.a. WORLD WORKING C.I.), Carrera 10 No. 31–01 Zona Industrial Los Mangos, Cali, Colombia; NIT # 805023286–9 (Colombia) [SDNT]

WORRELL, Gareth Bruce (a.k.a. WORRELL MURRAY, Gareth Bruce; a.k.a. WORRELL MURRAY, Garrett; a.k.a. ''GARETH MOREY''); DOB 19 Jun 1971; alt. DOB 19 Jan 1971; POB Belize; Passport 0159817 (Belize) (individual) [SDNT]

XHAFERI, Shefit; DOB 1960 (individual) [BALKANS]

XHEMAJLI, Emrush; DOB 5 May 1959; POB Urosevac, Serbia and Montenegro (individual) [BALKANS]

XHEMAJLI, Muhamet; DOB 8 Feb 1958; POB Muhovac, Serbia and Montenegro (individual) [BALKANS]

YA MAHDI INDUSTRIES GROUP (a.k.a. YA MAHDI INDUSTRIAL COMPLEX; a.k.a. YA MAHDI INDUSTRIAL RESEARCH COMPLEX; a.k.a. ''YMA''), PO Box 19395–4731, Tehran, Iran [NPWMD]

YAKUT, CUMHUR (a.k.a. TANN, Ahmet), Bartin, Turkey; Dubai, United Arab Emirates; DOB 18 Mar 1955; POB Turkey; citizen Turkey; nationality Turkey (individual) [SDNTK]

YAM, Melvia Isabel Gallegos, Merida, Mexico (individual) [CUBA]

YAMAHA VERANILLO DISTRIBUIDORES, Via 40 No. 67–42, Barranquilla, Colombia [SDNT]

YAMARU TRADING CO., LTD., Tokyo, Japan [CUBA]

YANDARBIEV, Zelimkhan Ahmedovich Abdul Muslimovich, Derzhavina Street 281–59, Grozny, Chechen Republic, Chechnya, Russia; DOB 12 Sep 1952; POB Vydriba Eastern Kazakhstan; citizen Russia; Passport 43 No. 1600453 (Russia) (individual) [SDGT]

YANEZ GUERRERO, Rigoberto; DOB 1962; nationality Mexico (individual) [SDNTK]

YANGON AIRWAYS COMPANY LIMITED (a.k.a. YANGON AIRWAYS), MMB Tower, Level 5, 166 Upper Pansodan Rd., Mingalar Taung Nyunt Township, Rangoon, Burma [SDNTK]

YARMOSHINA, Lidziya Mihaulauna (a.k.a. YARMOSHINA, Lidya Mihaulauna; a.k.a. YARMOSHINA, Lidya Mikhailovna; a.k.a. YARMOSHINA, Lidziya Mikhailovna; a.k.a. YARMOSHINA, Lydia Mihaulauna; a.k.a. YARMOSHINA, Lydia Mikhailovna; a.k.a. YARMOSHYNA, Lidya Mihaulauna; a.k.a. YARMOSHYNA, Lidya Mikhailovna; a.k.a. YARMOSHYNA, Lidziya Mihaulauna; a.k.a. YARMOSHYNA, Lidziya Mikhailovna; a.k.a. YARMOSHYNA, Lydia Mihaulauna; a.k.a. YARMOSHYNA, Lydia Mikhailovna; a.k.a. YERMOSHINA, Lidya Mihaulauna; a.k.a. YERMOSHINA, Lidya Mikhailovna; a.k.a. YERMOSHINA, Lidziya Mihaulauna; a.k.a. YERMOSHINA, Lidziya Mikhailovna; a.k.a. YERMOSHINA, Lydia Mihaulauna; a.k.a. YERMOSHINA, Lydia Mikhailovna); DOB 29 Jan 1953; POB Slutsk, Belarus; Head of the Central Commission for Elections and National Referendums (CEC) (individual) [BELARUS]

YASIN, Abdul Rahman (a.k.a. TAHA, Abdul Rahman S.; a.k.a. TAHER, Abdul Rahman S.; a.k.a. YASIN, Abdul Rahman Said; a.k.a. YASIN, Aboud); DOB 10 Apr 1960; POB Bloomington, Indiana USA; citizen United States; Passport M0887925 (Iraq); alt. Passport 27082171 (United States) issued 21 Jun 1992; SSN 156–92–9858 (United States); U.S.A. Passport issued 21 Jun 1992 in Amman, Jordan (individual) [SDGT]

YASSIN, Sheik Ahmed Ismail, Gaza Strip, undetermined; DOB 1938; POB al-Jawrah, al-Majdal District, Gaza (individual) [SDT] [SDGT]

YAZD METALLURGY INDUSTRIES (a.k.a. YAZD METALLURGICAL IND'S CO.; a.k.a. YAZD METALLURGICAL INDUSTRIES), P.O. Box 89195–678, Yazd, Iran; Km 5 of Taft Road, Yazd, Iran; Postal Box 89195/878, Yazd, Iran; Pasdaran Avenue, Next To Telecommunication Industry, Tehran 16588, Iran [NPWMD]

YEATON, Benjamin (a.k.a. YEATEN, Benjamin); Passport D–00123299 (Liberia); Former Director, Special Security Services of Liberia; Diplomatic (individual) [LIBERIA]

YEPES ALZATE, Milady, c/o OBURSATILES S.A., Cali, Colombia; DOB 9 Jan 1968; Cedula No. 31971236 (Colombia); Passport 31971236 (Colombia) (individual) [SDNT]

YEPES LOPEZ, Maria Emma, c/o MAPRI DE COLOMBIA LTDA., Bogota, Colombia; Cedula No. 25015128 (Colombia); Passport 25015128 (Colombia) (individual) [SDNT]

YEPES VELEZ, Silvio (a.k.a. YEPEZ VELEZ, Silvio), c/o HOTEL LA CASCADA S.A., Girardot, Colombia; Carrera 30 No. 77–26, Bogota, Colombia; DOB 9 Nov 1948; POB Manizales, Caldas, Colombia; Cedula No. 19065009 (Colombia); NIT # 19065009–4 (Colombia) (individual) [SDNT]

YILMAZ, Adem, Sudliche Ringstrasse 133, Langen 63225, Germany; DOB 4 Nov 1978; alt. DOB 11 Apr 1978; POB Bayburt, Turkey; citizen Turkey; Passport TR-P 614166 (Turkey); alt. Passport 0018850 (Turkey); currently incarcerated at Weiterstadt, Germany (individual) [SDGT]

YOUSEF, Rafik Mohamad (a.k.a. KAIRADIN, Raific Mohamad), Mannheim Prison, Germany; Kathe Dorsch Ring 21, Berlin 12353, Germany; DOB 27 Aug 1974; POB Baghdad, Iraq; nationality Iraq; Travel Document Number A0092301 (Germany) (individual) [SDGT]

YOUSSEF M. NADA, Via Riasc 4, Campione d'Italia I, CH–6911, Switzerland [SDGT]

YOUSSEF M. NADA & CO. GESELLSCHAFT M.B.H., Kaernter Ring 2/2/5/22, Vienna 1010, Austria [SDGT]

YOUSSER COMPANY FOR FINANCE AND INVESTMENT, Lebanon [SDGT]

YULDASHEV, Tohir (a.k.a. YULDASHEV, Takhir), Uzbekistan (individual) [SDGT]

YUN, Cheng (a.k.a. ''YIN CHEIN''; a.k.a. ''YIN CHIN''; a.k.a. ''YUN CHENG''), 11, Ngu Shwe Wah Road, Between 64th and 54th Street, Chan mya Si Township, Mandalay, Burma; National ID No. (HWI)040182 (Burma) (individual) [SDNTK]

YUNOS, Mukhlis (a.k.a. YUNOS, Muklis; a.k.a. YUNOS, Saifullah Mukhlis); DOB circa 7 Jul 1966; POB Lanao del Sur, Philippines (individual) [SDGT]

YUZANA COMPANY LIMITED (a.k.a. YUZANA CONSTRUCTION), No. 130 Yuzana Centre, Shwegondaing Road, Bahan Township, Yangon, Burma [BURMA]

ZA, Pye Phyo Tay, Burma; 6 Cairnhill Circle, Number 18–07, Cairnhill Crest 229813, Singapore; DOB 29 Jan 1987; citizen Burma; nationality Burma; Son of Tay Za. (individual) [BURMA]

ZA, Tay (a.k.a. TAYZA; a.k.a. TEZA; a.k.a. ZA, Te; a.k.a. ZA, U Tay; a.k.a. ZA, U Te), 6 Cairnhill Circle, Number 18–07, Cairnhill Crest 229813, Singapore; Burma; DOB 18 Jul 1964; alt. DOB 18 Jun 1967; citizen Burma; nationality Burma; Managing Director, Htoo Trading Company Limited; Chairman, Air Bagan Holdings Pte. Ltd. (d.b.a. Air Bagan); Managing Director, Pavo Trading Pte. Ltd. (individual) [BURMA]

ZABALA PADILLA, Omar Arturo (a.k.a. ZABALA PADILLA, Omar Enrique; a.k.a. ''LUCAS GUALDRON''), Colombia; DOB 11 Jul 1969; POB Bucaramanga, Colombia; nationality Colombia; Cedula No. 91267294 (Colombia); International FARC Commission Member for France, Italy, and Switzerland (individual) [SDNTK]

ZAHRAN, Yousuf, P.O. Box 1318, Amman, Jordan (individual) [IRAQ2]

ZAINAL, Akram, Iraq; Chairman and General Manager of AGRICULTURAL CO-OPERATIVE BANK (individual) [IRAQ2]

ZAKARIA, Zaini, A–1–8 Pangsapuri Sri Tanjung, Jalan Sky BS2, Bukit Sentosa Rawang, Selangor 48300, Malaysia; DOB 16 Jun 1967; alt. DOB 16 May 1967; POB Kelantan, Malaysia; Passport A11457974 (Malaysia) (individual) [SDGT]

ZAMBADA GARCIA, Ismael (a.k.a. GARCIA HERNANDEZ, Javier; a.k.a. HIGUERA RENTERIA, Ismael; a.k.a. LOAIZA AVENDANO, Jesus; a.k.a. LOPEZ LANDEROS, Jeronimo; a.k.a. ZAMBADA GARCIA, Ismael Mario; a.k.a. ZAMBADA, El Mayo), Calle Juan Jose Rios, Culiacan, Mexico; Bahia de San Ignacio #1921, Colonia Nuevo Culiacan, Culiacan, Sinaloa, Mexico; Calle Presa Humaya #104, Fraccionamiento Las Quintas, Culiacan,

Sinaloa, Mexico; PTE 4 49 2212, Cuchilla Del Tesoro, Delegacion Gustavo A Madero, Distrito Federal, Mexico; DOB 1 Jan 1948; alt. DOB 03 Sep 1951; alt. DOB 06 Dec 1952; POB Sinaloa, Mexico; alt. POB Guadalajara, Jalisco, Mexico; alt. POB El Salado, Sinaloa, Mexico; alt. POB Costa Rica, Sinaloa, Mexico; Driver's License No. N36064231 (Mexico); R.F.C. ZAGI–500130 (Mexico); alt. R.F.C. GAHJ–521206 (Mexico); alt. R.F.C. LOLJ–510903 (Mexico) (individual) [SDNTK]

ZAMBADA NIEBLA, Maria Teresa, Calle Rio Quelite 210, Colonia Guadlupe, Culiacan, Sinaloa 80220, Mexico; Calle Ciudad de Hermosillo # 1168, Fraccionamiento Las Quintas, Culiacan, Sinaloa, Mexico; Avenida Universidad No. 1900, Colonia Copilco, Coyoacan, Distrito Federal 04350, Mexico; c/o JAMARO CONSTRUCTORES S.A. DE C.V., Culiacan, Sinaloa, Mexico; c/o ESTANCIA INFANTIL NINO FELIZ S.C., Culiacan, Sinaloa, Mexico; Calle Cerro de la Campana 649, Colonia Colinas de San Miguel, Culiacan, Sinaloa 80060, Mexico; c/o NUEVA INDUSTRIA DE GANADEROS DE CULIACAN S.A. DE C.V., Culiacan, Sinaloa, Mexico; c/o ESTABLO PUERTO RICO S.A. DE C.V., Culiacan, Sinaloa, Mexico; DOB 17 Jun 1969; POB Culiacan, Sinaloa, Mexico; alt. POB Sonora, Mexico; citizen Mexico; nationality Mexico; C.U.R.P. ZANT690617MSLMBR01 (Mexico); Passport 97040021870 (Mexico); R.F.C. ZANT–690617-B73 (Mexico) (individual) [SDNTK]

ZAMBADA NIEBLA, Midiam Patricia (a.k.a. LOPEZ LANDEY, Midian Patricia; a.k.a. ZAMBADA NIEBLA, Midian Patricia; a.k.a. ZAMBADA NIEBLA, Miriam), Calle Ciudad de Hermosillo # 1168, Fraccionamiento Las Quintas, Culiacan, Sinaloa, Mexico; c/o NUEVA INDUSTRIA DE GANADEROS DE CULIACAN S.A. DE C.V., Culiacan, Sinaloa, Mexico; Calle Lago Cuitzeo 1394, Colonia Las Quintas, Culiacan, Sinaloa 80060, Mexico; c/o JAMARO CONSTRUCTORES S.A. DE C.V., Culiacan, Sinaloa, Mexico; c/o ESTABLO PUERTO RICO S.A. DE C.V., Culiacan, Sinaloa, Mexico; Calle Gabino Vazquez # 1206, Colonia Los Pinos, Culiacan, Sinaloa, Mexico; DOB 04 Mar 1971; POB Culiacan, Sinaloa, Mexico; citizen Mexico; nationality Mexico; C.U.R.P. ZANM710304MSLMBD14 (Mexico); alt. C.U.R.P. ZANM710304MSLMBDO6 (Mexico); Passport 97040022206 (Mexico); R.F.C. ZANM–710304-RN2 (Mexico) (individual) [SDNTK]

ZAMBADA NIEBLA, Modesta, c/o JAMARO CONSTRUCTORES S.A. DE C.V., Culiacan, Sinaloa, Mexico; c/o NUEVA INDUSTRIA DE GANADEROS DE CULIACAN S.A. DE C.V., Culiacan, Sinaloa, Mexico; c/o ESTABLO PUERTO RICO S.A. DE C.V., Culiacan, Sinaloa, Mexico; Calle Ciudad de Hermosillo # 1168, Fraccionamiento Las Quintas, Culiacan, Sinaloa 80060, Mexico; DOB 22 Nov 1982; POB Culiacan, Sinaloa, Mexico; citizen Mexico; nationality Mexico; C.U.R.P. ZANM821122MSLMBD07 (Mexico); Passport 95040018273 (Mexico); R.F.C. ZANM–821122-H87 (Mexico) (individual) [SDNTK]

ZAMBADA NIEBLA, Monica del Rosario (a.k.a. ZAMBADA NIEBLA, Monica del Rocio), c/o NUEVA INDUSTRIA DE GANADEROS DE CULIACAN S.A. DE C.V., Culiacan, Sinaloa, Mexico; c/o JAMARO CONSTRUCTORES S.A. DE C.V., Culiacan, Sinaloa, Mexico; c/o ESTABLO PUERTO RICO S.A. DE C.V., Culiacan, Sinaloa, Mexico; Calle Ciudad de Hermosillo # 1168, Fraccionamiento Las Quintas, Culiacan, Sinaloa, Mexico; Calle Ciudad de Puebla 1254, Colonia Las Quintas, Culiacan, Sinaloa, Mexico; DOB 02 Mar 1980; alt. DOB 02 Apr 1980; POB Culiacan, Sinaloa, Mexico; citizen Mexico; nationality Mexico; C.U.R.P. ZANM800402MSLMBN02 (Mexico); Passport 040037016 (Mexico); alt. Passport 95040018272 (Mexico); R.F.C. ZANM–800402 (Mexico) (individual) [SDNTK]

ZAMBADA NIEBLA, Vicente (a.k.a. SOTELO GUZMAN, Vicente; a.k.a. ZAMBADA NIEBLA, Jesus Vicente; a.k.a. ZAMBADA NIEBLA, Vincente; a.k.a. ''EL MAYITO''), 4852 Palma Cocotera, Colonia Las Palmas, Culiacan, Sinaloa, Mexico; Calle Ciudad de Hermosillo # 1168, Fraccionamiento Las Quintas, Culiacan, Sinaloa 80060, Mexico; c/o ESTABLO PUERTO RICO S.A. DE C.V., Culiacan, Sinaloa, Mexico; c/o NUEVA INDUSTRIA DE GANADEROS DE CULIACAN S.A. DE C.V., Culiacan, Sinaloa, Mexico; DOB 24 Mar 1975; POB Sinaloa, Mexico; citizen Mexico; nationality Mexico; Passport 97040021871 (Mexico); R.F.C. ZANV–750324-NY5 (Mexico) (individual) [SDNTK]

ZAMBRANO CERON, Maria Concepcion, c/o AGROPECUARIA LA ROBLEDA S.A., Cali, Colombia; DOB 4 Aug 1928; Cedula No. 29488292 (Colombia) (individual) [SDNT]

ZAMBRANO MADRONERO, Carmen Alicia, c/o FARMACOOP, Bogota, Colombia; c/o DROMARCA Y CIA S.C.S., Bogota, Colombia; c/o COSMEPOP, Bogota, Colombia; c/o PATENTES MARCAS Y REGISTROS S.A., Bogota, Colombia; c/o COPSERVIR LTDA., Bogota, Colombia; c/o SHARPER S.A., Bogota, Colombia; c/o CREDISOL, Bogota, Colombia; c/o GLAJAN S.A., Bogota, Colombia; DOB 18 Nov 1967; Cedula No. 30738265 (Colombia); Passport 30738265 (individual) [SDNT]

ZAMORA RUIZ, Alexander, c/o INPESCA S.A., Buenaventura, Colombia; Cedula No. 16498805 (Colombia) (individual) [SDNT]

ZAMORA, Jose Hernan, c/o GANADERIAS DEL VALLE S.A., Cali, Colombia (individual) [SDNT]

ZAR; Vessel Registration Identification IMO 9260160 (vessel) [NPWMD]

ZARATAN CORPORATION, Avenida 4 Norte 4N–30, Cali, Colombia; Vanterpool Plaza, P.O. Box 873, Wickhams Cay I, Road Town, Tortola, Virgin Islands, British; Calle 7 Oeste No. 1–13, Cali, Colombia [SDNT]

ZARATAN CORPORATION, Avenida 4 Norte No. 4N–30, Cali, Colombia; Vanterpool Plaza, P.O. Box 873, Wickhams Cay I, Road Town, Tortola, Virgin Islands, British; Calle 7 Oeste No. 1–13, Cali, Colombia [SDNT]

ZARIC, Simo; DOB 25 Jul 1948; POB Trnjak, Bosnia-Herzegovina; ICTY indictee (individual) [BALKANS]

ZARKAOUI, Imed Ben Mekki Ben Al-Akhdar (a.k.a. ''NADRA''; a.k.a. ''ZARGA''), Via Col. Aprosio 588, Vallecrosia (IM), Italy; DOB 15 Jan 1973; POB Tunisi (Tunisia); nationality Tunisia; Passport M174950 issued 27 Apr 1999 expires 26 Apr 2004; arrested 30 Sep 2002 (individual) [SDGT]

ZAW, Thein, Burma; DOB 20 Oct 1951; citizen Burma; nationality Burma; Brigadier General, Minister of Telecommunications, Post, & Telegraph (individual) [BURMA]

ZAW, Thidar (a.k.a. ZAW, Daw Thidar; a.k.a. ZAW, Thida), Burma; 6 Cairnhill Circle, Number 18–07, Cairnhill Crest 229813, Singapore; DOB 2 Feb 1964; alt. DOB 2 Feb 1964; citizen Burma; nationality Burma; Wife of Tay ZA (individual) [BURMA]

ZAW, Zaw (a.k.a. ZAW, U Zaw), c/o Hotel Max, Burma; c/o Max Myanmar Group of Companies, Burma; c/o Max Singapore International Pte. Ltd., Burma; DOB 22 Oct 1966; citizen Burma; nationality Burma; Passport 828461 (Burma) issued 18 May 2006 expires 17 May 2009 (individual) [BURMA] [JADE]

ZAY GABAR COMPANY (a.k.a. ZAYKABAR COMPANY), Burma [BURMA]

ZAZUETA URREA, Epifanio, Calle Mariano Escobedo Ote No. 467–4, Col. Centro, Culiacan, Sinaloa, Mexico; c/o CONSORCIO INMOBILIARIO DEL VALLE DE CULIACAN, S.A. DE C.V., Culiacan, Sinaloa, Mexico; V Guerrero 109 Nte. Centro Colon y Escobedo CP 80000, Culiacan, Sinaloa, Mexico; c/o SIN-MEX IMPORTADORA, S.A. DE C.V., Mexico, Distrito Federal, Mexico; DOB 1 Aug 1947; POB Sinaloa, Mexico; citizen Mexico; nationality Mexico; Electoral Registry No. ZZUREP47080125H900 (Mexico); Passport 040032826 (Mexico); R.F.C. ZAUE470801DK6 (Mexico) (individual) [SDNTK]

ZB BANK LIMITED (a.k.a. ZB BANK; a.k.a. ZBCL; a.k.a. ZIMBABWE BANKING CORPORATION LIMITED; a.k.a. ZIMBANK), Zimbank House, Cnr. 1st Street/Speke Avenue, Harare, Zimbabwe; P.O. Box 3198, Harare, Zimbabwe; Phone No. 263–4–751168; Fax No. 263–4–757497 [ZIMBABWE]

ZB FINANCIAL HOLDINGS LIMITED (a.k.a. FINHOLD; a.k.a. WWW.ZB.CO.ZW; a.k.a. ZIMBABWE FINANCIAL HOLDINGS LIMITED), 10th Floor ZB House, 46 Speke Avenue, P.O. Box 3198, Harare, Zimbabwe; National ID No. 1278/89 (Zimbabwe); Phone No. 263–4–751168; Fax No. 263–4–251029 [ZIMBABWE]

ZB HOLDINGS LIMITED, 10th Floor ZB House, 46 Speke Avenue, P.O. Box 3198, Harare, Zimbabwe; Phone No. 263–4–751168; Fax No. 263–4–251029 [ZIMBABWE]

ZDRAVO, 12 Pop Lukina, Belgrade, Serbia; Registration ID 17317105 (Serbia); Tax ID No. 100036386 (Serbia); juice manufacturer [BALKANS]

ZELEN-KARADZIC, Ljiljana; DOB 27 Nov 1945; POB Sarajevo Bosnia-Herzegovina (individual) [BALKANS]

ZELENOVIC, Dragan; DOB 12 Feb 1961; ICTY indictee at large (individual) [BALKANS]

ZERFAOUI, Ahmad (a.k.a. ''ABDALLA''; a.k.a. ''ABDULLAH''; a.k.a. ''ABU

CHOLDER''; a.k.a. ''ABU KHAOULA''; a.k.a. ''NUHR''; a.k.a. ''SMAIL''); DOB 15 Jul 1963; POB Chrea, Algeria (individual) [SDGT]

ZEVALLOS GONZALES DE ARREDONDO, Maria del Rosario, c/o AVIANDINA S.A.C., Lima, Peru; c/o PERUVIAN PRECIOUS METALS S.A.C., Lima, Peru; Aldabas MZ. 53, LT. 25, Las Gardenias, Lima, Peru; DOB 26 Jun 1956; LE Number 09138069 (Peru) (individual) [SDNTK]

ZEVALLOS GONZALES, Fernando Melciades (a.k.a. GONZALES, Hernan; a.k.a. ZEVALLOS GONZALEZ, Fernando); DOB 8 Jul 1957; POB Juanjui, San Martin, Peru; LE Number 07552116 (Peru) (individual) [SDNTK]

ZEVALLOS GONZALES, Lupe Maritza, c/o CORPORACION DE INVERSIONES EMPRESARIALES S.A., Lima, Peru; c/o BLISSEY PANAMA INC., Panama City, Panama; c/o LA CROSSE GROUP INC, Tortola, Virgin Islands, British; c/o URANTIA SERVICES S.A., Lima, Peru; c/o REPRESENTACIONES ORIENTE S.R.L., Trujillo, Peru; c/o ORIENTE CONTRATISTAS GENERALES S.A., Trujillo, Peru; c/o AERO CONTINENTE S.A., Lima, Peru; c/o EMPRESA EDITORA CONTINENTE PRESS S.A., Lima, Peru; c/o BELLOSOM ENTERPRISE, INC., Panama City, Panama; c/o TRANSPORTES AEREOS UNIDOS SELVA AMAZONICA S.A., Lima, Peru; c/o AERO COURIER CARGO S.A., Lima, Peru; Calle Nicolas de Rivera 610, Dpto. 702, Lima, Peru; DOB 17 Sep 1961; LE Number 07607833 (Peru) (individual) [SDNTK]

ZEVALLOS GONZALES, Milagros Angelina, c/o AVIANDINA S.A.C., Lima, Peru; c/o AERO CONTINENTE S.A., Lima, Peru; Calle Jose Maria Sert 201, Lima, Peru; DOB 12 Aug 1968; LE Number 07617157 (Peru) (individual) [SDNTK]

ZEVALLOS GONZALES, Sara Marilyn, c/o EMPRESA EDITORA CONTINENTE PRESS S.A., Lima, Peru; c/o REPRESENTACIONES ORIENTE S.R.L., Trujillo, Peru; c/o ORIENTE TOURS S.R.L., Lima, Peru; c/o LA CROSSE GROUP INC, Tortola, Virgin Islands, British; Calle Trinidad Moran 1316, Lima, Peru; c/o PERU TOTAL MARKET E.I.R.L., Lima, Peru; c/o ORIENTE CONTRATISTAS GENERALES S.A., Trujillo, Peru; c/o TRANSPORTES AEREOS UNIDOS SELVA AMAZONICA S.A., Lima, Peru; c/o SERVICIOS SILSA S.A.C., Lima, Peru; c/o AERO COURIER CARGO S.A., Lima, Peru; DOB 01 Jan 1963; LE Number 07553224 (Peru) (individual) [SDNTK]

ZEVALLOS GONZALES, Winston Ricardo (a.k.a. ZEVALLOS GONZALES, Ricardo), c/o AVIANDINA S.A.C., Lima, Peru; Avenida Rio Grande 367, Lima, Peru; c/o AERO CONTINENTE S.A., Lima, Peru; c/o TALLER DE REPARACIONES DE AERODINOS SUS PARTES Y SERVICIOS AEREOS S.A., Tarapoto, San Martin, Peru; c/o CORPORACION DE INVERSIONES EMPRESARIALES S.A., Lima, Peru; c/o TRANSPORTES AEREOS UNIDOS SELVA AMAZONICA S.A., Lima, Peru; DOB 11 May 1959; LE Number 07942932 (Peru); SSN 592–29–5509 (individual) [SDNTK]

ZHUWAO, Beauty Lily; DOB 10 Jan 1965; Passport AN353466 (Zimbabwe); Spouse of Patrick Zhuwao (individual) [ZIMBABWE]

ZHUWAO, Patrick; DOB 23 May 1967; Deputy Minister of Science and Technology (individual) [ZIMBABWE]

ZIA, Mohammad (a.k.a. ZIA, Ahmad), c/o Zahir Shah s/o Murad Khan Ander Sher, Peshawar, Pakistan; c/o Ahmed Shah s/o Painda Mohammad al-Karim Set, Peshawar, Pakistan; c/o Alam General Store Shop 17, Awami Market, Peshawar, Pakistan (individual) [SDGT]

ZIDCO HOLDINGS (a.k.a. ZIDCO HOLDINGS (PVT) LTD), Po Box 1275, Harare, Zimbabwe; 88 Robert Mugabe Road, Harare, Zimbabwe [ZIMBABWE]

ZIGIC, Zoran; DOB 20 Sep 1958; POB Balte, Bosnia-Herzegovina; ICTY indictee (individual) [BALKANS]

ZIMBABWE DEFENCE INDUSTRIES (PVT) LTD., 10th Floor, Trustee House, 55 Samora Machel Avenue, Harare, Zimbabwe; P.O. Box 6597, Harare, Zimbabwe [ZIMBABWE]

ZIMBABWE IRON AND STEEL COMPANY (a.k.a. ZISCO; a.k.a. ZISCOSTEEL), Private Bag 2, Redcliff Zimbabwe, Zimbabwe; Phone No. 263–55–62401; Fax No. 263–55–68666 [ZIMBABWE]

ZIMBABWE MINING DEVELOPMENT CORPORATION (a.k.a. ZIMBABWE MINING DEVELOPMENT CORP.; a.k.a. ZMDC), MMCZ Building, 90 Mutare Rd., Harare, Zimbabwe; P.O. Box 4101, Harare, Zimbabwe; Phone No. 263–4–487014; Fax No. 263–4–487022 [ZIMBABWE]

ZIMONDI, Paradzai; DOB 4 Mar 1947; Zimbabwe Prisons Chief (individual) [ZIMBABWE]

ZIMOUSKY, Aliaksandr Leanidavich (a.k.a. SIMOWSKI, Aliaksandr Leanidavich; a.k.a. ZIMOUSKI, Akiaksandr Leanidavich; a.k.a. ZIMOUSKI, Alaksandr Leanidavich; a.k.a. ZIMOUSKY, Alaksandr Leanidavich; a.k.a. ZIMOVSKI, Aleksandr Leanidavich; a.k.a. ZIMOVSKI, Aleksandr Leonidovich; a.k.a. ZIMOVSKI, Alexander Leonidovich; a.k.a. ZIMOVSKI, Aliaksandr Leanidavich; a.k.a. ZIMOVSKY, Alaksandr Leanidavich; a.k.a. ZIMOVSKY, Aleksandr Leonidovich; a.k.a. ZIMOVSKY, Alexander Leonidovich; a.k.a. ZIMOVSKY, Aliaksandr Lieanidavich; a.k.a. ZIMOWSKI, Alaksandr Leanidavich; a.k.a. ZIMOWSKI, Aleksandr Leonidovich; a.k.a. ZIMOWSKI, Alexander Leonidovich; a.k.a. ZIMOWSKY, Alaksandr Leanidavich; a.k.a. ZIMOWSKY, Aleksandr Leonidovich; a.k.a. ZIMOWSKY, Alexander Leonidovich; a.k.a. ZIMOWSKY, Aliaksandr Leanidavich); DOB 10 Jan 1961; POB Germany; Head of the Belarusian State Television and Radio Company (BSTRC); Member of the Upper House of Parliament (individual) [BELARUS]

ZIMRE HOLDINGS LIMITED (a.k.a. WWW.ZHL.CO.ZW; a.k.a. ZIMRE), 9th Floor, Zimre Centre, Cnr. Leopold Takawira/Kwame Nkrumah Avenue, P.O. Box 4839, Harare, Zimbabwe; Phone No. 263–4–772963; Fax No. 263–4–772972 [ZIMBABWE]

ZIVAR; Vessel Registration Identification IMO 9260172 (vessel) [NPWMD]

ZOMOROUD; Vessel Registration Identification IMO 9138044 (vessel) [NPWMD]

ZUBAIDI, Muhammad Hamza (a.k.a. AL-ZUBAIDI, Mohammed Hamza; a.k.a. AL-ZUBAYDI, Muhammad Hamsa); DOB 1938; POB Babylon, Babil Governorate, Iraq; nationality Iraq; former prime minister (individual) [IRAQ2]

ZUBIAGA BRAVO, Manex; DOB 14 August 1979; POB Getxo Vizcaya Province, Spain; D.N.I. 16.064.664; Member ETA (individual) [SDGT]

ZULEKHA GENERAL TRADING LLC (a.k.a. ZULEIKHA GENERAL TRADING; a.k.a. ZULIKHA GENERAL TRADING), P.O. Box 5456, Ajman, United Arab Emirates; C.R. No. 32035 (United Arab Emirates) [SDNTK]

ZULKARNAEN (a.k.a. ARIF SUNARSO; a.k.a. ARIS SUMARSONO; a.k.a. ARIS SUNARSO; a.k.a. MURSHID; a.k.a. USTAD DAUD ZULKARNAEN; a.k.a. ZULKARNAIN; a.k.a. ZULKARNAN; a.k.a. ZULKARNIN); DOB 1963; POB Gebang village, Masaran, Sragen, Central Java, Indonesia; nationality Indonesia (individual) [SDGT]

ZULUAGA ALZATE, Diana Patricia, Paseo 5 de Julio, Barrio Libertad, San Antonio, Tachira, Venezuela; Calle 30 No. 3B–45, La Campina, Pereira, Risaralda, Colombia; c/o ORLANDO SABOGAL ZULUAGA E HIJOS & CIA S EN C, Ansermanuevo, Valle, Colombia; Avenida 17A No. 19–27, Barrio San Jose, Cucuta, Norte de Santander, Colombia; Carrera 3 No. 11–99, Cartago, Valle, Colombia; Calle 14 No. 30–153, Medellin, Antioquia, Colombia; citizen Colombia; nationality Colombia; Cedula No. 25246532 (Colombia) (individual) [SDNT]

ZULUAGA LINDO, Francisco Javier (a.k.a. GALINDO, Gabriel; a.k.a. ''GORDO LINDO''), c/o SOCIEDAD SUPERDEPORTES LTDA., Bogota, Colombia; Calle 10 No. 46–45, Cali, Colombia; Calle 9 No. 28–50, Piso 3, Cali, Colombia; DOB 15 Jan 1970; POB Cali, Colombia; citizen Colombia; nationality Colombia; Cedula No. 16774828 (Colombia); Passport AE047754 (Colombia); alt. Passport AF869394 (Colombia) (individual) [SDNT]

ZUPLJANIN, Stojan; DOB 1951; POB Maslovare, Bosnia-Herzegovina; ICTY indictee (individual) [BALKANS]

ZVINAVASHE INVESTMENTS LTD. (a.k.a. LAMFONTINE FARM; a.k.a. ZVINAVASHE TRANSPORT), 730 Cowie Road, Tynwald, Harare, Zimbabwe; P.O. Box 3928, Harare, Zimbabwe [ZIMBABWE]

ZVINAVASHE, Vitalis; DOB 27 Sep 1943; Politburo Member & Retired Commander of Zimbabwe Defense Forces (individual) [ZIMBABWE]

Dated: June 5, 2009.

Adam J. Szubin,

Director, Office of Foreign Assets Control.

[FR Doc. E9–13801 Filed 6–22–09; 8:45 am]

BILLING CODE 4811–45–P

Federal Register

Tuesday,
June 23, 2009

Part III

Department of Transportation

National Highway Traffic Safety Administration

49 CFR Part 572

Anthropomorphic Test Devices; SID–IIs Side Impact Crash Test Dummy; 5th Percentile Adult Female; Final Rule

DEPARTMENT OF TRANSPORTATION

National Highway Traffic Safety Administration

49 CFR Part 572

[Docket No. NHTSA–2009–0002]

RIN 2127–AK26

Anthropomorphic Test Devices; SID–IIs Side Impact Crash Test Dummy; 5th Percentile Adult Female

AGENCY: National Highway Traffic Safety Administration (NHTSA), Department of Transportation (DOT).

ACTION: Final rule, response to petitions for reconsideration, technical amendment.

SUMMARY: This final rule responds to petitions for reconsideration of a December 14, 2006 final rule establishing a new small adult female side impact crash test dummy, called the ''SID–IIs'' test dummy. The petitions were submitted by the Alliance of Automobile Manufacturers, First Technology Safety Systems, and Denton ATD. In response to the petitions, among other things today's final rule modifies the iliac performance criteria to allow a new material formulation and design to be used for the iliac wing of the dummy's pelvis, defines a time period in which accelerations are measured in the thorax with arm and pelvis acetabulum tests, slightly modifies some of the test procedures used in the qualification tests (*e.g.,* by slightly lowering the impact speed of the impactor in two tests and by increasing the recovery time for the pelvis-iliac and pelvis-acetabulum tests), adjusts the performance corridors for the various impact tests of the dummy, and revises parts of the drawing package and the user's manual for the dummy.

DATES: This final rule is effective August 24, 2009. The incorporation by reference of certain publications listed in the regulations is approved by the Director of the Federal Register as of August 24, 2009. If you wish to petition for reconsideration of this rule, your petition must be received by August 7, 2009.

ADDRESSES: If you wish to petition for reconsideration of this rule, you should refer in your petition to the docket number of this document and submit your petition to: Administrator, National Highway Traffic Safety Administration, 1200 New Jersey Avenue, SE., Washington, DC, 20590.

The petition will be placed in the docket. Anyone is able to search the electronic form of all documents received into any docket by the name of the individual submitting the comment (or signing the comment, if submitted on behalf of an association, business, labor union, *etc.*). You may review DOT's complete Privacy Act Statement in the **Federal Register** published on April 11, 2000 (Volume 65, Number 70; Pages 19477–78).

FOR FURTHER INFORMATION CONTACT: For non-legal issues, you may call Ms. Lori Summers, NHTSA Office of Crashworthiness Standards (telephone 202–366–1740) (fax 202–493–2990). For legal issues, you may call Ms. Deirdre Fujita, NHTSA Office of Chief Counsel (telephone 202–366–2992) (fax 202–366–3820). You may send mail to these officials at the National Highway Traffic Safety Administration, 1200 New Jersey Avenue, SE., Washington, DC, 20590.

SUPPLEMENTARY INFORMATION:

Table of Contents

I. Introduction
II. Description of SID–IIs
  a. General Description
  b. Performance Characteristics
III. Petitions for Reconsideration
IV. Overview of Response to the Petitions
V. Issues Relating to the Pelvis of the Dummy
  a. Iliac Wing Material
  b. Iliac Load Cell Stand-Off Design
  c. Iliac Qualification Procedure
  1. Use of OSRP Procedure
  2. Pelvic Iliac Probe Acceleration
  3. Specification of Tape
  4. Corrections
  d. Pelvis Acetabulum Qualification Procedure
  1. Pelvic Plug Pre-Crush and Associated Variability
  2. Pelvic Plug Qualification Corridor
  3. Pelvis Acceleration Requirement
  4. Measuring Peak Pelvis Lateral Acceleration 5 ms or More After Contact
VI. Shoulder Qualification Procedures
  a. Impact Velocity
  b. Arm Position
VII. Thorax with Arm Qualification Procedures
  a. Peak Impactor Acceleration
  b. Time Zero
  c. Reported Noise in Potentiometers
VIII. Thorax Without Arm Petitioned Issues
  a. Peak Impactor Acceleration
  b. Dummy Alignment on the Test Bench
IX. Abdomen Qualification Procedure
  a. Impact Velocity
  b. Dummy Alignment on the Test Bench
X. Other Testing Issues
  a. Dummy Clothing
  b. Recovery Time Between Tests
  c. Soak Time
  d. Tolerance on the Impactor Mass
  e. Neck Cable Torque in PADI
  f. Pendulum Deceleration Pulse
  g. Neck Potentiometers
XI. Qualification Performance Corridors
  a. Shoulder Qualification Corridors
  b. Thorax with Arm Qualification Corridors
  c. Thorax without Arm Qualification Corridors
  d. Abdomen Qualification Corridors
  e. Pelvis Acetabulum Qualification Corridors
  f. Pelvis Iliac Qualification Corridors
XII. Drawing Package and PADI
  a. Issues Raised By Both FTSS and Denton
  b. Issues Raised By FTSS
  c. Issues Raised By Denton
  d. Agency Corrections and Clarifications
XIII. Regulatory Analyses and Notices

I. Introduction

This final rule responds to petitions for reconsideration of a December 14, 2006 final rule (71 FR 75342; Docket No. NHTSA–2006–25442) that amended 49 CFR part 572 to add specifications and qualification requirements for a 5th percentile adult female side impact test dummy, called the ''SID–IIs.'' The notice of proposed rulemaking (NPRM) preceding the December 14, 2006 final rule was published on December 8, 2004 (69 FR 70947; Docket NHTSA–2004–18865; reopening of comment period, March 8, 2005, 70 FR 11189). The SID–IIs is used by NHTSA and other testing organizations in side impact test programs. The use of the SID–IIs test dummy in NHTSA's enforcement program assessing vehicles' compliance with Federal Motor Vehicle Safety Standard (FMVSS) No. 214 (''Side impact protection,'' 49 CFR 571.214) was discussed in and made part of a final rule upgrading FMVSS No. 214 published on September 11, 2007.[1] In the upgrade, NHTSA added a dynamic pole test to FMVSS No. 214, to supplement the moving deformable barrier (MDB) test currently in the standard. In the dynamic pole test, a vehicle is propelled sideways into a rigid pole at an angle of 75 degrees, at any speed up to 32 km/h (20 mph). Compliance with the pole test will be determined in two test configurations, one using the SID–IIs test dummy representing small adult females and the other using an ''ES–2re'' test dummy representing mid-size adult males.[2] The final rule required vehicles to protect against head, thoracic and other injuries as measured by the two test dummies. The final rule also specified using the dummies in FMVSS No. 214's MDB test,

[1] 72 FR 51908, Docket No. NHTSA–2007–29134; response to petitions for reconsideration, June 9, 2008, 73 FR 32473; Docket No. NHTSA–2008–0104. NHTSA will be publishing a second response to petitions for reconsideration addressing other issues.

[2] NHTSA added the specifications for the ES–2re to 49 CFR part 572 (*see* final rule, December 14, 2006, 71 FR 75304, Docket No. NHTSA–2004–25441; response to petitions for reconsideration, June 16, 2008, 73 FR 33903, Docket No. NHTSA 2008–0111).

which simulates a vehicle-to-vehicle, ''T-bone'' type intersection crash.[3]

II. Description of SID–IIs

a. General Description

The December 14, 2006 final rule incorporated specifications for the SID–IIs (or SID–IIsD) consisting of: (a) A drawing package containing all of the technical details of the dummy; (b) a parts list; and (c) a user manual containing procedures for inspection, assembly, disassembly, use, and adjustments of dummy components.[4]

The anthropometry and mass of the SID–IIsD are based on the Hybrid III 5th percentile frontal female dummy and also generally match the size and weight of a 12- to 13-year-old child. The head and neck designs are based on the Hybrid III 5th percentile female dummy. The legs are Hybrid III 5th percentile female design available also with femur load cell instrumentation. At the same time, unlike the Hybrid III series of dummies, the SID–IIsD's torso construction is particularly oriented for assessing the potential for side impact injury. The dummy's upper torso is made up of a rigid metallic spine to which six spring steel bands lined with bonded polymer damping material are attached to simulate the impact performance of the human shoulder (1 rib), thorax (3 ribs) and abdomen (2 ribs). Linear potentiometers are attached from the ribs to the spine for compression measurements. Provisions are available for mounting tri-axial accelerometer packs to the spine at T_1 and T_{12} and at each rib.[5] Replaceable foam pads are secured directly to the ribs and a neoprene jacket covers the complete chest assembly. The upper torso accommodates the attachment of the neck at the upper end and the lumbar spine at the lower end.

A stub arm on the impacted side is attached to the lateral aspect of the shoulder through a three-axis load cell. Tri-axial accelerometer packs can also be installed at the shoulder and at the upper and lower parts of the stub arm for assessing injuries in upper extremities in side crashes.

The dummy's pelvis is a machined assembly with detachable hard urethane iliac wings at each side and covered by vinyl flesh. The pelvis design is shaped in a seated human-like posture and allows the attachment of the lumbar spine at its top and the legs at the left and right sides. The pelvis can be impacted from either side without any change in hardware. Foam crush plugs at the hip joint, which are replaced after each impact, are used to control the lateral pelvis response. The pelvis design allows the measurement of impact loads at the acetabulum and iliac wing as well as accelerations at the pelvis center of gravity (cg). A thin steel backer plate between the iliac wing and iliac load cell prevents the iliac wing material from deforming and offloading a portion of the iliac load cell measurement.

b. Performance Characteristics

The December 14, 2006 final rule also specified a qualification process for the SID–IIs dummy, i.e., a series of specified component and whole body-level tests, to verify that a test dummy's response measurements fall within prescribed ranges. For any test dummy to be a useful test device in a compliance or vehicle rating setting, responses to controlled inputs must be reproducible and repeatable. The tests and response ranges (or performance corridors) for the SID–IIs, specified in 49 CFR part 572 subpart V, ensure that the dummy's responses to controlled inputs are reproducible and repeatable, thus assuring full and accurate evaluation of occupant injury risk in vehicle tests. The test procedures and performance specifications for qualification of the SID–IIs as set forth in the December 14, 2006 final rule established performance levels for the dummy's head, neck assembly, shoulder, thorax with arm, thorax without arm, abdomen, pelvis acetabulum, and pelvis iliac.

III. Petitions for Reconsideration

The Alliance of Automobile Manufacturers[6] (Alliance) and test dummy manufacturers First Technology Safety Systems (FTSS) and Denton ATD (Denton) petitioned for reconsideration of the December 14, 2006 final rule.[7] The petitioners generally supported the incorporation of the SID–IIs into 49 CFR part 572, but had concerns with technical aspects of the Part 572 specifications and with the drawings incorporated by reference into the regulation. The main suggestions of each of the petitioners are briefly summarized below:

a. The Alliance suggested using a material to manufacture the iliac wing that is recommended by the Occupant Safety Research Partnership (OSRP) SID–IIs task group,[8] a material that the Alliance believes is ''more manufacturable and stable'' than the material referenced in the final rule. (The petitioners refer to the recommended material as ''Material #3.'') The Alliance also petitioned to change aspects of the test procedures of the shoulder (dummy arm orientation; probe impact velocity), of the thorax with arm (time when peak acceleration should be measured), and of the abdomen (probe impact velocity) qualification tests, and made other suggestions regarding general test procedures. The Alliance also petitioned for changes to the performance corridors for the tests of the shoulder, thorax with and without arm, abdomen, pelvis iliac wing (based on the use of Material #3, or ''M3''), and pelvis acetabulum.[9]

b. FTSS petitioned to change to M3 and a standoff design for the iliac wing, and suggested changes relating to the tests of the thorax with arm (time when peak acceleration should be measured) and pelvis acetabulum (time when peak acceleration should be measured). The

[3] The September 11, 2007 final rule fulfilled the mandate of Section 10302 of the ''Safe, Accountable, Flexible, Efficient Transportation Equity Act: A Legacy for Users,'' (SAFETEA–LU), Pub.L. 109–59 (Aug. 10, 2005; 119 Stat. 1144). Section 10302(a) of SAFETEA–LU.

[4] The drawings, parts list and user manual incorporated by reference by the December 14, 2006 final rule were placed in NHTSA Docket No. 2006–25442. Materials that have been updated by today's final rule are placed in the docket for today's document.

[5] T_1–sensor location on the dummy's thoracic spine equivalent to the first thoracic vertebra on the human spine. T_{12}–sensor location on the dummy's thoracic spine equivalent to the 12th thoracic vertebra on the human spine.

[6] Members at the time of the petition for reconsideration were: BMW Group, DaimlerChrysler, Ford Motor Company, General Motors, Mitsubishi Motors, Porsche, Toyota, and Volkswagen. DaimlerChrysler separated subsequent to the petition for reconsideration, and additional members at the time of this final rule are Mazda and Mercedes-Benz USA.

[7] Additionally, a letter in support of the Alliance and FTSS petitions was received from the Insurance Institute for Highway Safety (IIHS).

[8] OSRP is a consortium of the U.S. Council for Automotive Research (USCAR). USCAR was formed in 1992 by DaimlerChrysler, Ford and General Motors as a research and development organization. The SID–IIs was originally developed by the OSRP, in conjunction with FTSS. The dummy was extensively tested in the late 1990s and early 2000s by Transport Canada, and to a limited extent by U.S. automobile manufacturers and suppliers, and IIHS. Modification of and upgrades to the SID–IIs design ultimately lead to the development of the build level D version of the dummy. The December 14, 2006 final rule adopted the SID–IIs Build Level D test dummy into 49 CFR part 572.

[9] On December 13, 2007, the Alliance submitted additional SID–IIsD qualification data and recommended performance corridors as an appendix to their petition for reconsideration to the FMVSS No. 214 final rule published on September 11, 2007. Because the submission was received late in the rulemaking process, these data were not incorporated into the NHTSA/FTSS data set for inclusion in statistical analyses. However, the new Alliance data were considered in the formation of corridors by comparing the Alliance-recommended corridors to those derived using the NHTSA/FTSS data set, and adjusting the NHTSA corridors, if warranted.

petitioner also suggested changes to the performance corridors for the tests of the shoulder, thorax without arm, abdomen, and pelvis iliac and acetabulum. The petitioner also identified portions of the regulatory text and a number of drawings incorporated by reference into Part 572 that the petitioner believed needed correction.

c. Denton suggested that NHTSA adopt performance corridors recommended by the Society of Automotive Engineers Dummy Testing Equipment Subcommittee (SAE DTES) of the Human Biomechanics and Simulation Standards Committee. Denton also identified regulatory text and drawings that the petitioner suggested needed correction.

IV. Overview of Response to the Petitions

Today's document responds to the following issues raised in the petitions for reconsideration in the following order: issues relating to the pelvis of the dummy; shoulder qualification procedures; thorax with arm qualification procedures; thorax without arm qualification procedures; abdomen qualification procedures; other testing issues (*e.g.,* dummy clothing, recovery and soak times); qualification corridors; and changes to the drawing package and to NHTSA user's manual for the dummy (Procedures for Assembly, Disassembly and Inspection).

Among other things, today's final rule amends iliac performance criteria to allow for a new material formulation to be used for the iliac wing of the dummy's pelvis, defines a time period in which accelerations are measured in the thorax with arm and pelvis acetabulum tests, slightly modifies some of the test procedures used in the qualification tests (*e.g.,* by slightly lowering the impact speed of the impactor in several tests and by increasing the recovery time for the pelvis-iliac and pelvis-acetabulum tests), adjusts the performance corridors for the various impact tests of the dummy, and revises parts of the drawing package and the user's manual for the dummy.

V. Issues Relating to the Pelvis of the Dummy

a. Iliac Wing Material

As explained in the December 2006 final rule, during the course of NHTSA's evaluation of the repeatability and reproducibility of the SID–IIs dummy eventually adopted into part 572, the agency observed that its set of left side iliac wings had been used extensively for several years and was showing signs of wear. The agency obtained new replacement iliac wings from the dummy manufacturer (FTSS) and later observed that the replacement wings produced approximately 20 percent lower impact responses in dynamic impact tests than the previously-tested wings. NHTSA contacted FTSS and was informed that formulation of the polyurethane material for the wings changed in 2004 because the raw material previously used was no longer available due to toxicity issues.[10] The agency analyzed the post-2004 iliac wings and estimated that using them in NHTSA's FMVSS No. 214 fleet testing program [11] would have had the effect of lowering the average driver occupant pelvis force approximately 8 percent and that of the passenger about 3 percent, which would have amounted to only one instance out of 25 in which the pelvis force changed from just being above the Injury Assessment Reference Value (IARV) limit to just being below.[12] In view of those findings and because the material formulation of the iliac wings prior to 2004 (for convenience, we refer to this material formulation as ''Material #1'' or ''M1'') was no longer available, NHTSA decided to specify pendulum response data for the iliac wing that reflected the use of the softer post-2004 iliac material formulation (henceforth referred to as ''Material #2'' or ''M2''). (71 FR at 75355; December 14, 2006.)

Requested Change

In response to the final rule, all the petitioners requested that the regulation specify performance characteristics enabling the use of a new material formulation, which will be referred to as Material #3 (M3), for the iliac wing in place of M2.

FTSS stated that it began manufacturing wings composed of M3 on June 1, 2006, in response to direction from the OSRP SID–IIs task group and after finding that M3 was a suitable replacement for M1 and M2. FTSS also stated that it stopped manufacturing M2 iliac wings on May 30, 2006. According to FTSS, M3 iliac wings retain their shape better over time and are not subject to a warping found in M2 iliac wings.

In its petition, the Alliance noted that:

after extensive tests and evaluation, the OSRP SID–IIs task group recommended the use of material #3 for the following reasons: (1) it is available; (2) it is more manufacturable and stable than material #2; and (3) it has demonstrated repeatable performance. Material #3 is generally slightly stiffer than the original pre April 2004 (material #1) and may result in higher recorded loads.

Denton also supported the use of Material #3. The petitioner submitted information from SAE DTES which indicated there was no statistical means of choosing between M2 and M3, but that permanent deformation was observed in M2. The information also suggested that M3 will have less variability in manufacturing.

In its February 8, 2007 letter supporting the petitions for reconsideration from the Alliance and FTSS, IIHS stated that ''[t]he most important aspect of the petitions is the request to change the specification for the SID–IIs iliac wing to the updated design supported by the'' OSRP and FTSS.[13] IIHS stated that the updated iliac wing includes a material change to improve repeatability and durability, and integral metal standoffs to prevent interference with measurements from the iliac load cell that occurs over time due to compression of the softer material at the interface of the original design. IIHS stated that it converted all the SID–IIs dummies (Build Level C) used in its consumer information side impact test program to include the updated design. IIHS believed that it is important to harmonize the dummies used in its tests with the SID–IIs dummy (Build Level D) used in NHTSA's tests, and that adoption of the Material #3 iliac wing is critical to avoid differences in test results that could occur if organizations used different wing designs. IIHS also believed that using two different iliac wing designs would result in additional cost to laboratories that conduct both NHTSA-compliance and IIHS consumer information crash tests.

Agency Response

NHTSA is granting the petitions to adjust performance criteria so that Material #3 (M3) can be used for the iliac wings.[14] NHTSA's Vehicle Research and Test Center (VRTC) conducted quasi-static testing in the

[10] Docket No. NHTSA–2004–18865–36.

[11] Determination was made using data from the NHTSA Fleet Testing for FMVSS 214 Upgrade, MY 2004–2005, Docket No. NHTSA–2007–29134–0003.

[12] As stated in the December 2006 final rule, this estimate was based on calculated adjustments of the total force on the pelvis by taking into account lower impact responses of the softer iliac wing.

[13] IIHS stated in its letter that it also supported the request of the petitioners for NHTSA to consider data from multiple laboratories when establishing performance criteria for dummy verification tests. IIHS stated that ''This is necessary to account for normal variability among laboratories.''

[14] We note, however, that the material specification on the iliac wing drawings (Polyurethane 85–95 Shore A or equivalent) does not have to be changed to permit M3, so we are not changing it.

evaluation of the M3 iliac, which is described in the report ''SID–IIsD Iliac Wing Studies'' placed in the docket for this final rule. In these quasi-static tests, isolated iliac wings were loaded to 4,000 N over a period of several minutes. Quasi-static compression results from at least three tests on each of six new M3 iliac wings indicate that M3 is much closer in stiffness to M1 than M2. The agency used SID–IIs dummies with iliac wings made from M1 in agency vehicle and sled testing, so there is a large body of data related to the M1 wings. These data were used in part to develop the IARV referenced in FMVSS No. 214 for the pelvic load criterion measured by the SID–IIs. Because M3 is a material formulation that is very close in stiffness to the M1 iliac wings, NHTSA is adopting M3 since the agency has knowledge of and a familiarity with the properties of M1 wings, while NHTSA's experience with the M2 wings is more limited. Further, we agree with IIHS that using M3 iliac wings would better harmonize the test dummies used by NHTSA, IIHS and the industry, and would make the test results obtained by the testing components of each organization more comparable and better focused on the development of appropriate countermeasures. Also, according to the petitioners, M3 is more stable than M2, demonstrates repeatable performance, is readily available while M2 is not, and does not exhibit deformation characteristics exhibited by M2. For these reasons, the petitioners' request to specify characteristics that recognize the use of M3 in the manufacture of the iliac wing is granted.

The Alliance in its petition for reconsideration said that Material #3 is generally slightly stiffer than Material #1 and may result in higher recorded loads. We agree that in quasi-static tests, M3 wings were shown to be slightly stiffer than M1 wings, as seen in the ''SID–IIsD Iliac Wing Studies'' report, *supra.* However, the difference in stiffness between these wings is very small, so large differences in response in dynamic test environments are not expected. The similarity of response for the two different iliac wing material formulations is illustrated by the pelvis-iliac qualification test results. Table 1 shows that the average peak iliac force measured in qualification tests with M3 wings was 4588 N, while the average force in qualification tests with M1 wings was 167 N (3.6%) higher at 4755 N.[15]

TABLE 1—COMPARISON OF M1 AND M3 QUALIFICATION DATA

		Probe velocity (m/s)	Probe energy (J)	Maximum probe acceleration (g)	Maximum pelvis Y acceleration (g)	Maximum Iliac force (N)
M1	Min	4.21	126.02	38	29	3986
	Max	4.43	137.02	46	45	5448
	Average	4.35	133.51	41.36	34.99	4755.26
	SD	0.04	2.38	1.55	3.34	373.49
	CV	1.02%	1.78%	3.76%	9.55%	7.85%
M3	Min	4.21	123.67	35.55	27.24	3430
	Max	4.34	133.44	45.98	40.93	5275.53
	Average	4.29	129.55	40.84	34.03	4588.36
	SD	0.03	2.57	2.09	3.41	329.64
	CV	0.69%	1.98%	5.13%	10.03%	7.18%

In evaluating these results, we kept in mind that there were some factors that could have affected the iliac force measurements for each data set. First, when M1 was used, the design of the iliac wing did not incorporate two features that have since been added to prevent off-loading of the iliac load cell: integral metal ''standoffs'' within the wing; and a thin steel backer plate between the iliac wing and load cell (see Section V.b).

Second, deformation was observed on the left side M1 wings after extensive use, as noted in the report ''SID–IIs Iliac Certification Development,'' which was placed in the docket with the December 2006 final rule. These two issues could lead to an increased chance of the iliac wing deforming under load and shorting the iliac load cell, which would in turn result in lower measured iliac loads. This problem of iliac load cell shorting was first identified with the M2 iliac wings, which are much softer than the M1 wings. Thus, it is unknown whether this occurred with M1 wings. If load cell shorting did occur in any of the M1 qualification tests, it would have the effect of lowering the average response somewhat.

Second, although all M3 wings included the new integral metal ''standoffs,'' a number of tests in the M3 data set did not have a backer plate installed. If shorting did occur in any of these tests, the M3 average peak force may be slightly lower than it would have been without load cell shorting. However, there is no evidence that these M3 wings without a backer plate will contact the iliac load cell in qualification tests as illustrated in the ''SID–IIsD Iliac Wing Studies'' report. Thus, we do not believe the absence of a backer plate affected the load cell responses for M3 wings in qualification tests (see Section V.b).

Third, in general, the M1 tests were conducted at a slightly higher impact velocity than the M3 tests, which intuitively could result in higher force readings in M1 tests. However, when plotting a linear regression through M1 iliac force responses vs. impact velocity, there was no strong correlation with impact velocity ($R^2 = 0.21$). Therefore, we do not believe these slight differences in impact velocities had a significant effect on the average peak iliac forces.

In view of the quasi-static and dynamic test results from M1 and M3 iliac wings, we believe that their performance in the crash test environment will be very similar. Quasi-static test results show that the new M3 wings are slightly stiffer, while dynamic test results indicate slightly higher forces in M1 wings. This seeming discrepancy leads us to believe that differences between the wings are

[15] M1 qualification data and plots comparing M1 and M3 iliac force responses can be found in the memo ''M1 qualification data and comparison to M3 qualification data.''

within the natural variation of response that is seen in different types of test environments. Because of this, we believe that the wings perform very similarly, and that the use of M3 wings will not result in iliac forces that are consistently higher than M1 iliac wings. Thus, allowing a change in the wing material formulation is not likely to have a significant effect on pelvis force measurements in FMVSS No. 214.

b. Iliac Load Cell Stand-Off Design

The SID–IIsD final rule adopted an iliac wing design that was a polyurethane wing (Dwgs. 180–4320–1 and –2) with an embedded steel support plate (Dwg. 180–4321). Additionally, the final rule specified the use of a thin steel backer plate between the iliac wing and the iliac load cell to prevent the iliac material from off-loading force to the center of the load cell. Figure 1 illustrates how the backer plate is used in conjunction with the iliac wing and load cell, as specified in the December 2006 final rule.

Requested Change

In response to the final rule, FTSS noted that, in general, the iliac wing specified in the final rule has the propensity to cause a load path short due to its design. According to FTSS, the original iliac wing design resulted in ⅛-inch polyurethane material being sandwiched between the embedded iliac wing support plate and the iliac load cell. It found that the amount of loading force the iliac is able to accurately measure can vary depending upon how much torque the iliac mounting screws are under, how much the polyurethane material creeps over time, and how much the iliac maintains its original shape.

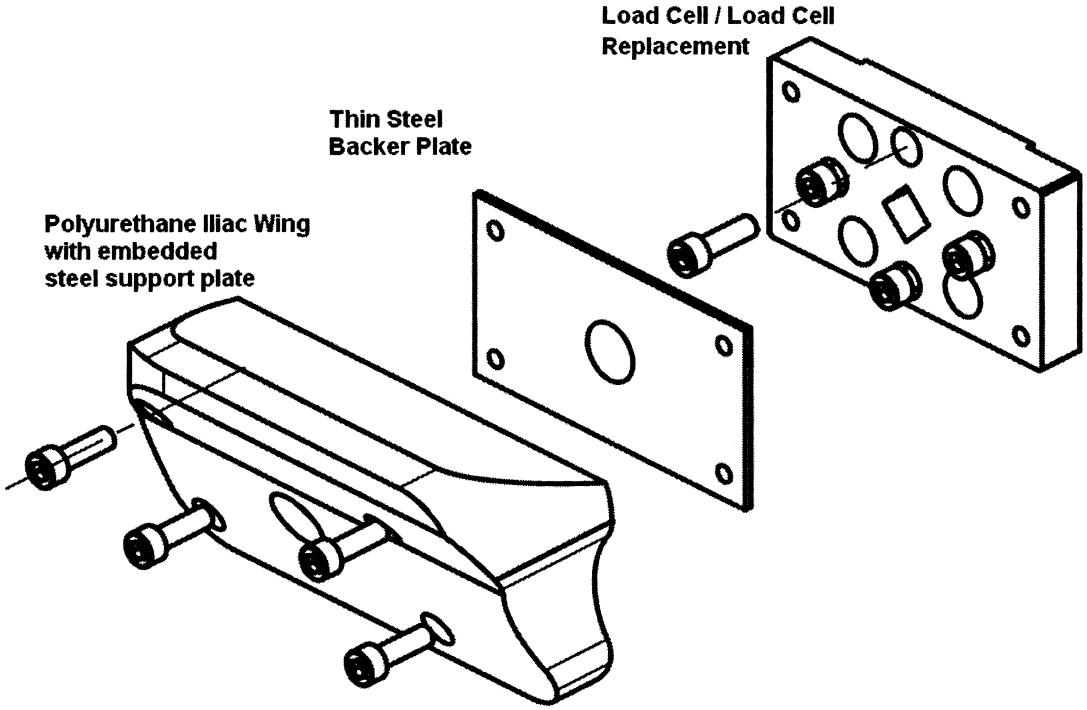

Figure 1: Alignment of iliac wing, backer plate, and load cell/replacement[16]

FTSS stated that it has designed a new iliac substructure (support plate) that has a positive bearing surface contact between the iliac wing and the load cell to create a rigid mounting surface between the iliac wing and load cell.[17] Essentially, the ⅛-inch thick polyurethane material around the mounting screw holes was replaced with ⅛-inch thick steel ''standoffs'' that extend from the embedded plate to the edge of the wing so that the mounting screws would draw the iliac wing to the load cell through a metal contact instead of through polyurethane. According to FTSS, this design eliminated the potential for load path shorting since standard fastener torque values can now be specified for the iliac wing mounting hardware without losing the torque over time, and it also eliminated the material creep found in the original iliac design. FTSS recommended that NHTSA evaluate this new design and include it in the drawing package in place of the original.

The Alliance and IIHS also recommend the use of Material #3 iliac wings with the standoff design. The Alliance ''agree[d] with the observation that the original wing design can deform and off-load the loads being transferred to the iliac load cell resulting in artificially low measurements.'' It stated, however, that while the use of the thin steel backer plate specified in the final rule (as shown in Figure 1) will reduce the likelihood of off-loading the load cell, it will not reduce deformation of the polyurethane iliac wing. It suggested that a more robust solution would be to use a rigid steel plate with standoffs that are embedded in the polyurethane iliac wing during manufacturing. The Alliance stated that ''this stronger plate with standoffs eliminates the possibility of off-axis loading.''

The Alliance petition for reconsideration also included a

[16] SID–IIsD final rule drawing package, Docket No. NHTSA–2006–25442–0012.

[17] The FTSS iliac wing design is illustrated in its petition, Docket No. NHTSA–2006–25442–0031.

presentation given by Denton to the OSRP that discussed test results supporting use of the standoff design. Although details of this presentation are not clear, it appears that when Denton loaded an iliac load cell through a simulated SID–IIs iliac wing without standoffs, it observed extrusion of the urethane when the mounting screws were tightened to 60 inch-pounds (in-lb), which it said caused ''shorting'' of the load path. Without a mounting screw preload,[18] the center of the iliac contacted the center of the load cell, shorting the load path at approximately 750 lb (3,336 N). We believe the presentation is indicating that without standoffs, the mounting screws cannot be tightened to a degree where load shorting does not occur. *I.e.,* when the screws were tightened to 60 in-lb, the load path was shorted by extrusion of urethane, and when the mounting screws were tightened to a lesser degree, the path was shorted by contact of the center of the wing to the load cell. With standoffs, apparently Denton found that shorting did not occur. With standoffs, when 1000 lb (4,448 N) of load was applied to the center and over each mounting screw, a worst-case difference of 4.3% resulted in measured versus applied load, which Denton stated is within acceptable limits. Denton did not report any shorting of the load path when the iliac plate with standoffs was tested, although they did observe extrusion of the urethane material when high loads were applied to the simulated wing outside the perimeter of the load cell. In its conclusion, Denton's presentation stated that the iliac wings without standoffs should not be used.[19]

Agency Response

After reviewing the data submitted by the petitioners, NHTSA is granting the request to have an iliac wing support plate with standoffs as part of the iliac design. The petitioners provided extensive evidence in favor of the standoffs.

At the same time, we are also specifying use of the thin steel backer plate. When the agency evaluated the standoff design, VRTC conducted qualification testing of the M3 iliac with standoffs, with and without the backer plate between the wing and load cell, as specified by the final rule (Table 2). VRTC found that qualification test results from these two iliac configurations were very similar. The average response from wings without a backer plate was always lower than that from wings with a backer plate as seen in Table 2, but was also always less than a 2.5% reduction from the response with a plate.[20] Thus, the influence of the backer plate appears to be negligible. However, the plate can act to prevent load path shorting through wing contact with the center of the load cell. Although there were no instances of load path shorting during qualification tests without a plate, two quasi-static tests without a backer plate were conducted on both the softest and stiffest M3 iliac wings with standoffs. In this set of tests, the softest iliac wing made contact with the center of the load cell at a load of about 3,700 N (831.8 lb). To prevent this from happening, we have decided to retain use of the thin steel backer plate between the iliac wing and iliac load cell.

TABLE 2—COMPARISON OF NHTSA M3 WITH STANDOFFS; ILIAC RESULTS WITH AND WITHOUT BACKER PLATE

Pelvis skin No.	Iliac wing No.	Backer plate?	Number of tests		Peak probe acceleration	Peak lateral pelvis acceleration	Peak iliac force
764	L–318	Yes	24	AVG.	40.27	30.87	4686.76
				S.D.	0.55	1.04	100.10
				%CV	1.4%	3.4%	2.1%
764	L–318	No	10	AVG.	39.44	30.43	4574.26
				S.D.	0.77	1.34	148.69
				%CV	1.9%	4.4%	3.3%
Percent Change Plate to No Plate Average Response					−2.06%	−1.43%	−2.40%
765	R–310	Yes	6	AVG.	41.79	35.32	4930.00
				S.D.	0.53	1.08	102.09
				%CV	1.3%	3.0%	2.1%
765	R–310	No	6	AVG.	41.50	34.62	4913.20
				S.D.	0.33	0.96	70.88
				%CV	0.8%	2.8%	1.4%
Percent Change Plate to No Plate Average Response					−0.69%	−1.98%	−0.34%

c. Iliac Qualification Procedure

1. Use of OSRP Procedure

The final rule established a qualification procedure for the pelvis iliac load cell, in addition to a procedure that assessed the performance of the acetabulum load cell. The pelvis iliac procedure checks the response consistency of the iliac load cell as installed in the dummy's pelvis. In the pelvis iliac test, a 13.97 kilogram (kg) impactor is accelerated to 4.3 ± 0.1 meters per second (m/s) and directed laterally into the pelvis of the dummy such that its impact surface strikes the centerline of the iliac access hole in the iliac load cell. Performance limits are set for peak impactor and pelvis lateral accelerations and peak iliac forces. The procedure was documented in the report ''SID–IIs Iliac Certification Development,'' (August 29, 2006).[21]

[18] We are unsure what is meant by ''mounting screw preload,'' however we believe that it means that the mounting screws were tightened to an amount less than 60 in-lb.

[19] The SAE/DTES material Denton enclosed with its petition recommended the standoff design rather than the backer plate design. It stated that based upon mechanical principles, the standoff design eliminates the possibility of material creep that could lead to screws loosening.

[20] Although the backer plate adds mass to the lower torso, it only adds 0.2 lb, or 0.7% of the lower torso weight. This small mass increase is not expected to appreciably increase the forces measured in qualification tests.

[21] Docket No. NHTSA–2006–25442–19.

Requested Change

In its petition for reconsideration, the Alliance requested that the iliac qualification procedure be replaced by an OSRP procedure since the petitioner's member companies had no experience with the final rule test condition and probe.

Agency Response

This request is denied. The petitioner provided no comparative analysis of how the OSRP procedure differs from that of the final rule, how Alliance members would be negatively impacted by the final rule procedure, or how the repeatability and reproducibility of the OSRP procedure compares to that of the final rule.

Among the differences between the two procedures, the OSRP procedure uses a calibration bench rather than a flat, rigid, horizontal surface; it requires the dummy to use the torso jacket and cotton underwear pants (unlike the final rule that requires removal of the clothing); it seats the dummy with the pelvis overhanging the seat surface by 78 ±2 millimeters (mm); and it uses the impactor specified for the abdominal impact test.

During NHTSA's development of the iliac qualification test procedure, various test conditions and probe faces were evaluated, including use of a calibration bench and an abdominal impactor face as suggested by the OSRP. The agency determined that use of the calibration bench caused concern since it can be difficult to hit the target impact area without the pendulum, or its guide wires, interfering with the bench. With regard to the use of the abdominal impactor face, we found that due to the geometry of the pelvis, setting the abdominal probe face such that it interacted with the iliac region in a repeatable fashion was difficult, even with careful positioning. Because of this, a new probe face and procedure were developed by the agency for the final rule that enable certification of the iliac without impacting the pelvis plug. Use of an alignment tool was also recommended to aid in a repeatable setup. Furthermore, NHTSA is satisfied that the final rule qualification procedure works well and there are no identifiable shortcomings of its use by the petitioners.

2. Pelvis Iliac Probe Acceleration

In the December 14, 2006 final rule, § 572.199 (c)(1) specifies a peak ''lateral'' acceleration of the impactor of not less than 34 g and not more than 40 g.

Requested Change

The Alliance recommended deleting the word ''lateral'' from the term ''peak lateral acceleration of the impactor * * * '' Denton believes that ''lateral'' should be replaced with ''longitudinal.''

Agency Response

The agency agrees to delete the word ''lateral'' from § 572.199(c)(1), but does not agree to add the word ''longitudinal.'' The peak impactor acceleration is measured on the long axis of the probe, so we agree that the term ''lateral'' is inappropriate. However, it is unnecessary to state that the acceleration is longitudinal.

3. Specification of Tape

In the December 14, 2006 final rule, the specification for use of tape is found in figures V9–A and V9–B of the regulatory text, which indicate the use of ''masking tape as required to hold dummy in position.'' The use of tape is also found in the supporting report, ''Certification Procedures for the SID–IIs Build Level D Side Impact Crash Test Dummy,'' (June 21, 2006), hereinafter referred to as the ''2006 certification procedures document.'' [22] This report states for the iliac qualification procedure: ''using masking tape from the top of the dummy's head to the seating surface, level the shoulder rib so that the fore/aft plane is 0°±1 relative to horizontal,'' and later states to ''adjust the masking tape as necessary'' to ensure proper dummy positioning.

Requested Change

The Alliance petitioned to request that if NHTSA retains the pelvis-iliac test as specified in the final rule, then it recommends that the width and amount of tape allowed to hold the dummy in its initial position be specified.

Agency Response

We agree to this request. We have revised the 2006 certification procedures document, now named ''Qualification Procedures for the SID–IIsD Side Impact Crash Test Dummy,'' [23] to clarify the use of tape for dummy alignment, as follows: ''Using approximately 3 feet of standard 1″ wide masking tape from the top of the dummy's head to the seating surface, level the shoulder rib so that the fore/aft plane is 0°±1° relative to horizontal.'' A footnote has been added that states, ''Alternatively, a material with maximum static breaking strength of 311 N (70 lb) may be used to support the dummy in position.'' (This specification was based on a similar specification in FMVSS No. 208, paragraph S24.4.2.4, which states, ''If necessary, material with a maximum breaking strength of 311 N (70 lb) and spacer blocks may be used to support the dummy in position.'') We have also revised Figures V9–A and V9–B of the regulatory text for the SID–IIs dummy to add the footnote, to provide information about the characteristics of the masking tape.

4. Corrections

A. Specification of Load Cell in Regulatory Text

FTSS informed NHTSA of an error in the pelvis-iliac section of the regulatory text, section 572.199(a).[24] This error was also discovered by the agency. The section specifies the use of acetabulum load cell SA572–S68. We agree with FTSS that the section should instead specify the iliac wing load cell SA572–S66.

B. Impactor Alignment in Regulatory Text

While reviewing the SID–IIsD final rule regulatory text, the agency identified an error in the iliac qualification test procedures. Section 572.199(b)(7) describes probe alignment prior to the pelvis iliac qualification test, and states that ''the 88.9 mm dimension of the probe's impact surface is aligned horizontally.'' The 88.9 mm dimension of the probe's impact surface should be aligned vertically, since the probe face is a rectangle, 50.8 × 88.9 mm, and the shorter side of the probe face is oriented horizontally, as seen in the 2008 qualification procedures document. We are making this correction in this final rule in 572.199(b)(8).

d. Pelvis Acetabulum Qualification Procedure

1. Pelvic Plug Pre-Crush and Associated Variability

In the December 14, 2006 final rule, NHTSA specified a compression force requirement that the pelvis plugs must exhibit when pre-crushed a depth of 2.5–3.5 mm. The pelvis plug crush

[22] The June 21, 2006 Certification Procedures document is available at Docket No. NHTSA–2006–25442–0018. The document provides for illustration purposes detailed descriptions of the test procedures specified for the SID–IIs in 49 CFR part 572, subpart V, and illustrates how the various tests are conducted by NHTSA.

[23] Dated July 1, 2008 and placed in the docket with this final rule. ''Certification'' was changed to ''Qualification'' for consistency of terminology in NHTSA technical reports and final rules. This 2008 report updates the 2006 document to reflect all the changes discussed in today's final rule and to make minor corrections/clarifications of the text.

[24] Docket No. NHTSA–2006–25442–0042.

development was discussed in the technical report entitled, ''SID–IIs Pelvis Plug Certification Development,'' (May 3, 2006, Docket 2006–25442–010), and the pre-crush procedures and plug qualification [25] requirements were set forth in the plug drawing 180–4450.

Requested Change

In petitions for reconsideration, Denton/SAE DTES agreed that a pre-crush depth of 3 mm should be used. However, the Alliance expressed concern about the levels of variability of the pelvic region that it said it observed in NHTSA [26] and OSRP tests. The Alliance also stated that it observed significant differences in acetabulum forces in three tests of identical vehicles where one test was conducted with a pelvis plug pre-crushed 3 mm and two tests were conducted with a pelvis plug pre-crush of 2 mm. The Alliance provided time-history plots of the acetabulum force, iliac wing force, combined pelvis force, and pelvis acceleration from three oblique pole tests conducted at three different laboratories. The petitioner stated that it is not clear whether the differences in the acetabulum response are due to the differences in the depth of pre-crush or due to other variables, and urged NHTSA to investigate this further and take the variability into consideration when developing the final rule for FMVSS No. 214.

Agency Response

We are not making any changes to the pelvis plug pre-crush procedure. The Alliance provided no discussion related to its concern about the variability of OSRP data and NHTSA data in the qualification and sled test environments. Additionally, the OSRP data was not submitted to the docket, so no comparisons could be made by the agency.

In response to the three vehicle test results, no conclusions can be drawn from the figures provided by the Alliance because two of the pelvis plugs used in the tests were pre-crushed only 2 mm. We have found that the pelvis response using plugs pre-crushed only 2 mm is unpredictable. As discussed in the ''SID–IIs Pelvis Plug Certification Development'' report released with the December 2006 final rule,[27] VRTC has found that the pelvis plug requires at least 3 (±0.5) mm of crush in order to characterize the plug response and ensure repeatable and reproducible pelvis responses in qualification, sled and vehicle tests. This is because the plug response does not become linear until after 2.5 mm of crush, as shown in Figure 5 of this report. It is necessary to reach this linear region during plug qualification so that plug behavior at higher levels of compression (*e.g.,* in qualification, sled and vehicle tests) can be predicted. At 2 mm of crush, as was used in two of the vehicle tests referred to by the Alliance, the plug response is still within a transition region, where plug behavior at higher levels of crush cannot be predicted. Thus, 2 mm of plug pre-crush is insufficient.

Based on the agency's experience with the pelvis plugs, the Alliance's finding that the acetabulum forces and other pelvis measurements were different for plugs pre-crushed 2 mm and plugs pre-crushed 3 mm is not surprising. Since the high-crush responses of plugs pre-crushed 2 mm are not predictable, the responses derived from these plugs are not comparable to those from 3 mm pre-crushed plugs. Differences between the 2 mm plug traces and the 3 mm plug trace could have occurred because these two 2 mm plugs had similar properties that did not match those of the 3 mm plug, but ultimately, there is no way of knowing what the behavior of these two 2 mm pre-crushed plugs was going to be. Furthermore, we do not know the extent by which the responses may have been affected by the variability in dummy set-up procedures and crash tests at the three different labs.

2. Pelvic Plug Qualification Corridor

In the December 14, 2006 final rule, plug qualification requirements were provided in the ''SID–IIs Pelvis Plug Certification Development'' (May 3, 2006) report and on drawing 180–4450 of the SID–IIsD drawing package.

Following the final rule, FTSS indicated that it carried out extensive testing on the pelvis plug according to the final rule procedures and corridors, testing close to one thousand pelvis plugs. Compression force at deflections of 0.5 mm, 1.0 mm, 1.5 mm, 2.0 mm, 2.5 mm and 3.0 mm were provided and plotted in their petition addendum.[28] From this data, FTSS petitioned NHTSA to alter the loading portion of the pelvis plug qualification corridor so that it has the following coordinates: Lower bound (0.5 mm, 50 N) and (1.5 mm, 915 N); upper bound (0.5 mm, 850 N) and (1.5 mm, 1715 N). The lower bound of the FTSS-proposed corridor is slightly steeper in slope, but very close to the lower bound of the final rule corridor, which has the coordinates (0.5 mm, 50 N) and (1.5 mm, 850 N). The upper bound of the FTSS proposed corridor allows for forces 250–315 N higher than the upper bound of the final rule corridor, which has the coordinates (0.5 mm, 600 N) and (0.5 mm, 1400 N). FTSS did not petition to change the requirements at the end of the plug compression, therefore, the force-deflection ''box'' at 3 ± 0.5 mm of deflection would be the same.

Agency Response

The agency is denying this request. NHTSA's concern is that it is unknown whether the loading portion of the plug force-deflection response has an effect on the dummy response in qualification, sled or vehicle tests. After receiving the petition, VRTC requested FTSS to explain its comment by providing pelvis-acetabulum qualification data that corresponded to the plug data provided in their petition. Such data could better show the agency that the dummy could still pass this qualification test using plugs that met the FTSS-suggested plug loading corridor and the force-deflection corridor at 3±0.5 mm.[29] In response to this request, FTSS provided data, but the data were unhelpful. The passing test results that were provided had either pelvis plug traces that fell within the suggested loading corridor *and* the final rule loading corridor, or did not meet the force-deflection box at 3±0.5 mm. Therefore, it could not be determined whether plugs that have traces that fell within the suggested corridor but outside the final rule corridor would still pass pelvis-acetabulum qualification tests. NHTSA is denying FTSS's petition to change the loading portion of the pelvis plug qualification corridor because it has not been demonstrated that the suggested corridor is acceptable.

3. Pelvis Acceleration Requirement

The December 14, 2006 final rule specified a pelvis acetabulum qualification procedure and set performance corridors for peak pelvis lateral acceleration (§ 572.198).

[25] NHTSA now uses the phrase ''plug qualification'' instead of ''plug certification,'' in agreement with the terminology for evaluating whether a dummy meets the criteria of Part 572.

[26] NHTSA data presented in ''Repeatability and Reproducibility Analysis of the SID–IIs Build Level D Dummy in the Certification Test Environment,'' and ''Repeatability, Reproducibility and Durability Evaluation of the SID–IIs Build Level D in the Sled Test Environment'' (Docket No. NHTSA–2006–25442).

[27] Docket No. NHTSA–2006–25442–0024.

[28] FTSS addendum to their petition for reconsideration, Docket No. NHTSA–2006–25442–0038. We note that the figure in this petition incorrectly depicts the final rule loading corridor.

[29] A memorandum describing this communication has been placed in the docket for this final rule.

Requested Change

Denton/SAE DTES recommended removing the pelvis lateral acceleration requirement from the test due to what was believed to be a large variability of response. An attachment to the petitioner's submission stated that a member of the SAE DTES presented pelvis lateral acceleration data from three different laboratories where the data looked distinctly different. It was noted in the attachment that the shape of the pelvis lateral acceleration peak varied widely, even with a single dummy in one lab. The DTES discussed possible reasons for the high variability of the first peak, but were not able to discern a definite explanation for this behavior. Although they agreed that variability was reduced when the acceleration peak was taken after 5 ms, they did not think that the measurement was necessary for qualification of the dummy and therefore recommended that the peak pelvis lateral acceleration be dropped. Alternatively (as seen in the next section), if the pelvis lateral acceleration parameter were not dropped, Denton/SAE DTES recommended to take the peak after 5 ms to eliminate the variable first peak.

Agency Response

We are denying the request to remove the peak pelvis lateral acceleration from the pelvis acetabulum qualification procedure. The petitioner's request that the pelvis lateral acceleration measurement be removed appears to have originated from the subcommittee's observation of variability in the first peak. This first peak is primarily dependent on the plug characteristics. The petitioner-referenced data was obtained from plugs pre-crushed to 2 mm. As discussed in the previous section, 2 mm of crush is not sufficient to assure consistent performance of the plug in high-crush environments. Therefore, it is likely that the variation observed by the petitioner was due to varying plug characteristics resulting from insufficient plug pre-crush. Because the petitioner based its request on pelvis plugs pre-crushed 2 mm, there is no reasonable basis for removing the measurement of peak pelvis lateral acceleration. In addition, the pelvis lateral acceleration measurement provides additional information as to the whole pelvis response which further assesses the response of the parts, and its requirement in the final rule should be maintained. (However, we are limiting the time period during which peak lateral acceleration will be measured, as discussed in the next section.)

4. Measuring Peak Pelvis Lateral Acceleration 5 ms or More After Contact

In the NPRM proposed regulatory text, S572.197(c)(2) [30] specified that the peak lateral pelvis acceleration was to be taken at 5 ms or more after the impactor contacts the dummy. The final rule did not include a time specification for this measurement.

Requested Change

FTSS requested that the peak lateral pelvis acceleration be taken 5 ms or more after the impactor contacts the dummy. FTSS believed that the variation in the data was much greater when the overall peak was taken instead of the peak after 5 ms, and noted that the first, larger peak is an inertial peak due to loading of the pelvis plug. The Alliance referenced a recommendation from the SAE DTES suggesting that this peak be taken after 5 ms.

Agency Response

We agree that there should be a time specification for the measurement of the peak pelvis lateral acceleration. The final rule preamble did not discuss why the proposed time specification was not adopted. As discussed in the previous section, the first peak of the pelvis lateral acceleration response, which occurs in the first 5–6 ms, is based primarily on the plug response. Since the pelvis-acetabulum test aims to verify the pelvis response, not the plug response, the acceleration during the first 5–6 ms should not be included. However, NHTSA examined pelvis lateral acceleration traces in 11 side impact crash tests conducted with the SID–IIs Build Level D dummy to determine if the first peak, which results from initial pelvis plug crush in qualification tests, was part of the dummy response in vehicle tests. (If the first peak were part of the dummy response, we would be disinclined to disregard this peak in dummy qualification.) Crash test results showed generally unimodal pelvis Y accelerations, indicating that in vehicle tests, the initial plug crush does not play a significant role in the results.

To determine after what point in time the peak lateral pelvis acceleration should be taken, NHTSA analyzed pelvis lateral acceleration traces for 46 pelvis-acetabulum qualification tests from four dummies and two labs. The data clearly showed multiple, distinct peaks as seen in Figure 2. As mentioned previously, the first main peak and second small ''bump'' in the data are due to the pendulum impacting the pelvis plug and (most likely) the pelvis flesh, respectively. The second major peak (called the ''second peak'' henceforth) represents the response of the dummy after the leg mass comes into play, and is the measure of interest for qualification of the dummy. As the petitioners claimed, the first peak was consistently higher than the second peak. In order to prevent measuring this first, less meaningful peak for qualification, the petitioners recommended that the peak pelvis acceleration value be taken after 5 ms after probe contact with the dummy.

[30] 69 FR at 70961, December 8, 2004.

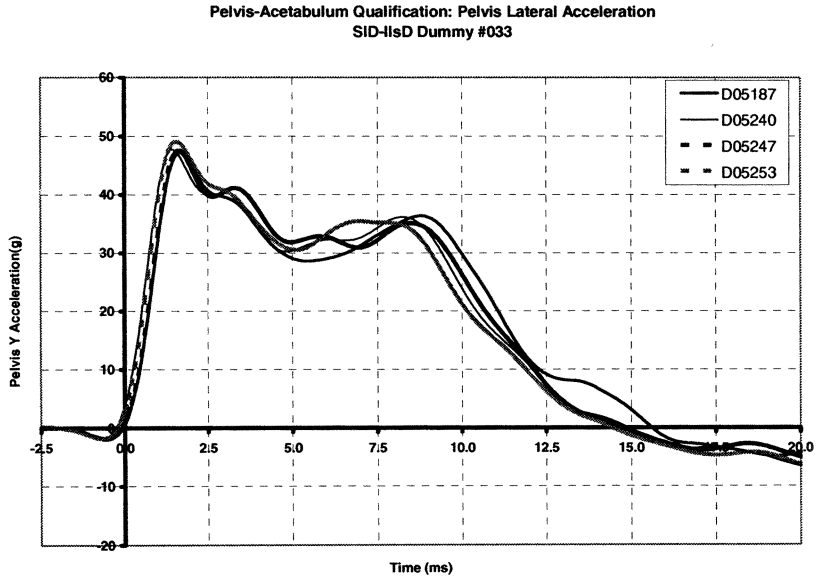

Figure 2: Examples of pelvis-acetabulum, pelvis Y acceleration response traces

It was not clear from the data that 5 ms was the most appropriate time to begin measuring a peak value. For each of these 46 traces, the peak values after 5 ms, 6 ms and 7 ms were obtained in order to determine how much time after probe impact should be disregarded to prevent the first peak from being measured. It was found that in five of the 46 tests, the maximum value after 5 ms was higher than that after 6 or 7 ms, because the value of the decreasing ''first peak'' response at 5 ms was higher than the main dummy response peak value. Four of these 5 instances occurred in Dummy S/N 20, and are seen in Figure 3 below. These cases led the agency to determine that the peak should be taken after 6 ms. However, in two tests, the peak of the main dummy response occurred just before 6 ms (*see* Figure 4), causing the peak after 6 ms to be slightly less than the actual peak. This occurrence was rare, though, and only resulted in an error of approximately 0.1 g for both tests. As a result of this evaluation, this final rule specifies that the peak pelvis lateral acceleration be taken after 6 ms.

Currently, there is no definition for ''time zero'' in the pelvis-acetabulum qualification test procedures (section 572.198(b)). Because of this, the time point ''6 ms'' cannot be defined. Therefore, to implement measuring the pelvis lateral acceleration after 6 ms, the agency is adding a provision to § 572.198(b) that defines time zero. Time zero was defined in the 2006 certification procedures document that was released concurrently with the December 2006 final rule, but there was not a need then to include the definition in the regulatory text of the final rule. Time zero was defined in the 2006 certification procedures document as follows: ''Time zero is defined as the time of contact between the impact probe and the pelvis plug. All channels are at a zero level at this point.'' Since defining time zero is now needed, this final rule adds a section 572.198(b)(11) to the regulatory text that specifies that time zero is defined as the time of contact between the impact probe and the pelvis plug.

BILLING CODE 4910–59–P

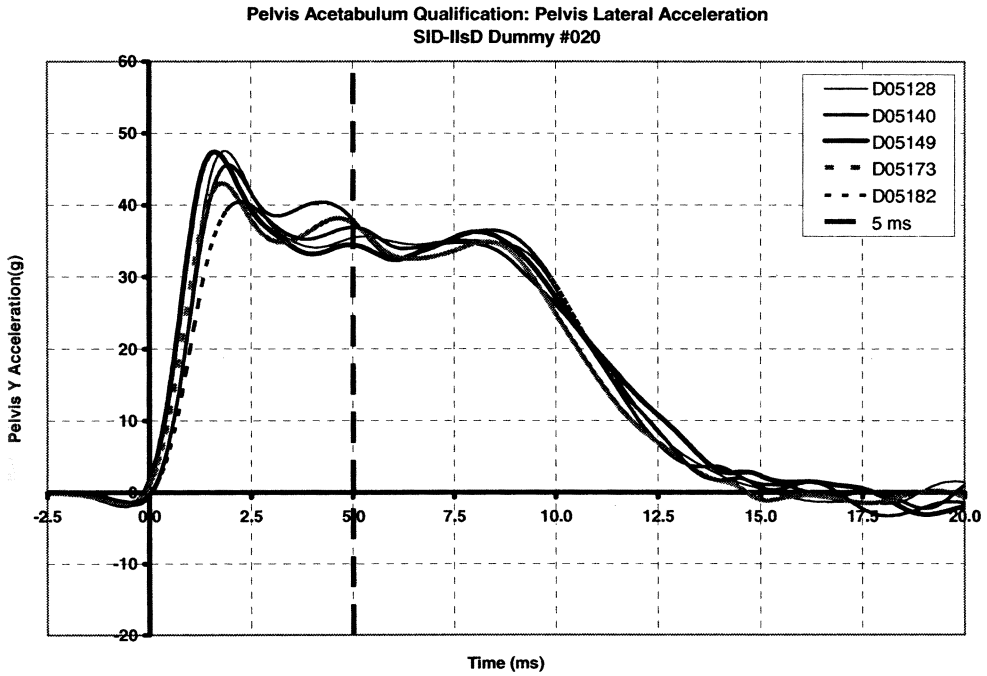

Figure 3: Pelvis Y acceleration traces (with the exception of D05149) with main response peak values lower than the acceleration at 5 ms

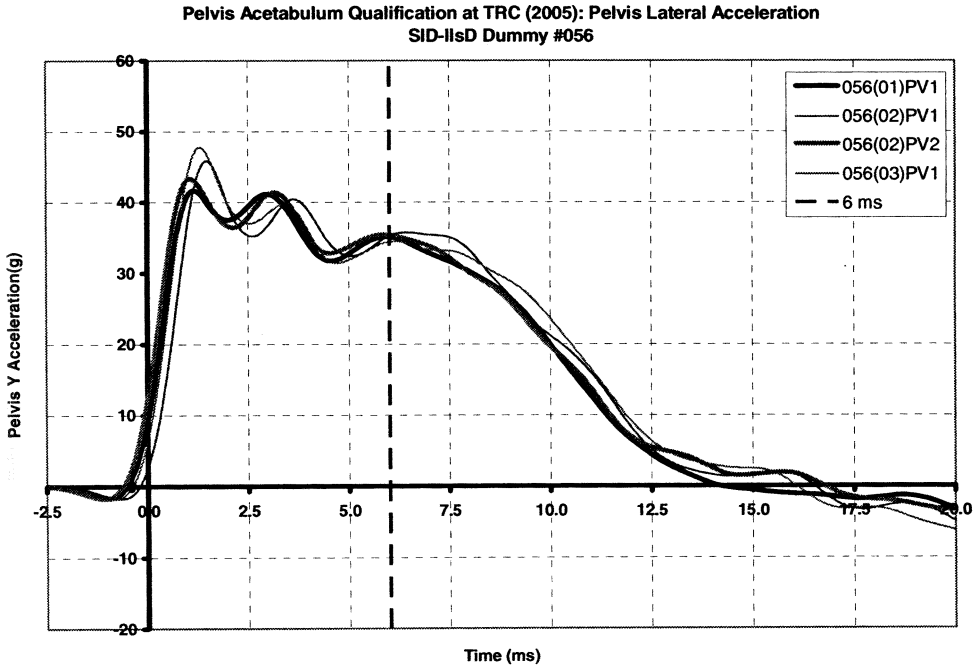

Figure 4: Tests 056(01)PV1 and 056(02)PV2 have main response peaks occurring slightly before 6 ms

VI. Shoulder Qualification Procedures

a. Impact Velocity

The December 14, 2006 final rule specified an impact velocity of 4.4 ±0.1 m/s for the shoulder and abdomen qualification test procedures. The thorax without arm and pelvis iliac tests use an impact velocity of 4.3 ±0.1 m/s.

Requested Change

The Alliance and Denton/SAE DTES recommended that the impact velocity of the shoulder and abdomen qualification procedures be consistent with the thorax without arm and pelvis iliac tests. The Alliance specifically recommended that all the subject tests use an impact velocity of 4.3 ±0.1 m/s to minimize setup errors in conducting qualification tests. It further suggested that the lower speed was more consistent with shoulder rib deflection measurements from NHTSA's FMVSS No. 214 fleet testing program. It found the following average shoulder rib deflections in NHTSA's testing: 32.4 mm for driver in pole tests; 19.3 mm for driver in MDB tests; and 27.9 mm for rear passenger in MDB tests. It also found that the average deflection for qualification tests conducted between 4.2 and 4.4 m/s from FTSS and NHTSA is 33.7 mm, which is greater than average shoulder deflections in the fleet tests and which, the petitioners believed, further supported a reduction in impact velocity for the shoulder qualification test.

Agency Response

We are granting this request. We agree that having the same impact speed for all subject qualification tests would be more convenient than having different speeds. However, because the tests used to support the December 2006 final rule were conducted at 4.4±0.1 m/s, and data submitted in petitions for reconsideration contained tests conducted at 4.4±0.1 m/s, little data existed between 4.2–4.3 m/s. Therefore, to evaluate the petitioners' request, VRTC conducted six shoulder qualification tests, with two tests on each of three dummies, at velocities ranging from 4.20–4.23 m/s. These tests were included with the existing shoulder qualification data, which was then analyzed as two separate data sets: one with tests conducted at impact velocities from 4.2–4.4 m/s and one with tests conducted at 4.3–4.5 m/s. The mean responses in each data set are very similar, as shown in Table 3. However, it is important to note that in looking at Figure 5, the average of the entire 4.4±0.1 m/s data set is close to the average of the responses between only 4.3–4.4 m/s, which make up the majority of the 4.3±0.1 m/s data set. Thus, similarity of means between the 4.4±0.1 m/s and 4.3±0.1 m/s data sets may be partially due to the majority of points in the 4.3±0.1 m/s data set being between 4.3–4.4 m/s.

TABLE 3—STATISTICAL SUMMARY OF SHOULDER QUALIFICATION TEST RESULTS AT 4.3 VS. 4.4 M/S IMPACT VELOCITIES

		Peak probe acceleration	Peak T1 acceleration	Peak shoulder deflection
4.3±0.1 m/s impact velocity	N	67	50	67
	Mean	15.53	19.26	33.33
	SD	0.99	1.19	2.05
	CV	6.40%	6.19%	6.16%
4.4±0.1 m/s impact velocity	N	120	69	120
	Mean	15.79	19.43	33.50
	SD	0.93	1.10	1.61
	CV	5.90%	5.67%	4.81%

Figure 5 shows the peak shoulder deflection responses with respect to the impact speed of the pendulum. It is observed that the peak deflections are noticeably lower at impact speeds of approximately 4.2 m/s. Because of this observation, the qualification performance corridors have been formed with the mindset that the statistical corridor (which is centered at the mean of the data set) may have to be adjusted to accommodate low deflections at the low impact velocities, since the mean of the 4.2–4.4 m/s data set may be slightly high due to the majority of tests being conducted between 4.3–4.4 m/s. The revised corridors are discussed in ''Analysis and Development of SID–IIsD Qualification Specifications in Response to Petitions for Reconsideration (July 1, 2008),'' [31] and in section XI.a of this preamble. We believe that by adjusting the performance corridor to reflect deflection responses at lower impact velocities, the new performance corridor will satisfactorily represent dummy responses over the full range of the revised specified impact velocities.

[31] The document has been placed in the docket for this final rule.

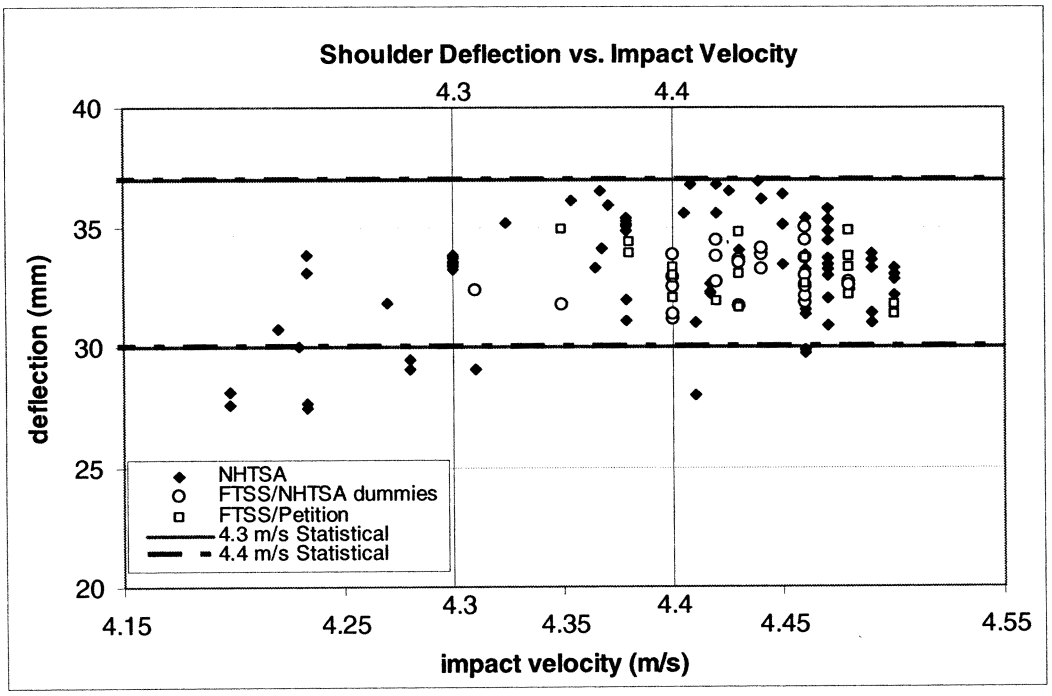

Figure 5: Peak shoulder deflections generated at probe impact velocities of 4.2 – 4.5 m/s

To support its petition, the Alliance also made the argument that the impact velocity should be reduced to 4.3 ±0.1 m/s because the average shoulder deflections in agency crash tests are lower than those resulting from qualification tests. This is true; the average shoulder deflections in agency crash tests were somewhat lower than the average deflections in qualification tests (shown in Table 3). However, we do not agree that it is necessary for the average shoulder deflections in qualification tests to align precisely with the average deflection in crash tests. This is due to the large variations in crash test shoulder deflection measurements [32] as compared to the relative closeness of shoulder deflection responses at a 4.3±0.1 m/s vs. 4.4±0.1 m/s impact velocity. Additionally, the agency usually establishes qualification tests to exercise dummy components at the level of the IARV, not at the level of the average recorded measurement in a crash test. Here, however, since there are no proposed shoulder injury criteria with which to establish a ''target'' deflection for qualification tests, we believe that the deflections obtained at either the 4.3 ±0.1 m/s or 4.4 ±0.1 m/s test speeds are acceptable, given that compared to the variation in shoulder deflections in crash tests, the deflections at 4.3 ±0.1 m/s versus 4.4 ±0.1 m/s are relatively close. Therefore, we are agreeable to reducing the test's impact velocity to 4.3 ±0.1 m/s.

b. Arm Position

The December 14, 2006 final rule (§ 572.194(b)(7)) states, ''Orient the arm to point forward at 90 degrees relative to the interior-superior orientation of the upper torso spine box incline.'' [33]

Requested Change

The Alliance recommended replacing the sentence with, ''Orient the arm forward into the 90 degree detent position.''

Agency Response

This request is denied. It is important for this test that the arm be oriented at the angle as described in the final rule regulatory text. We recognize that the arm would likely be in the same physical location when it is ''in the 90 degree detent position'' as when it is oriented ''to point forward at 90 degrees relative to the inferior-superior orientation of the upper torso spine box incline.'' However, it is possible that the detent could become worn over time, resulting in an arm position that is somewhat off of 90 degrees. Therefore, the arm angle specification will remain as stated in the final rule. Additionally, to make the agency's intent clearer, Figure V4–A is amended such that ''ARM IN 90° DETENT'' is replaced with ''ARM 90° ± 2° RELATIVE TO UPPER TORSO'' and a dashed line indicating the reference line of the upper torso is added. The qualification procedures document is also amended by adding the ±2° tolerance to the specified angle.

Relatedly, we note that the thorax with arm, pelvis acetabulum, and pelvis iliac tests specify that the SID–IIs arm should be oriented so it is in the ''lowest detent.'' We believe this wording could cause confusion, as it may be unclear whether the ''lowest detent'' should place the arm pointing downward or in a direction parallel to the orientation of the upper torso. For this reason, and for consistency with the wording used in the shoulder test, we have made the following changes to the regulatory text. In the thorax with arm test procedure, section 572.195(b)(7), ''Orient the arm downward to the lowest detent'' is changed to ''Orient the arm downward to the lowest detent such that the longitudinal centerline of the arm is

[32] Shoulder deflections in NHTSA crash tests ranged from 4.7–40.7 mm and 15.9–40.4 mm for the driver and passenger (respectively) in MDB tests, and from 8.6–51.2 mm for the driver in FMVSS No. 214 pole tests (NHTSA Fleet Testing for FMVSS 214 Upgrade, MY 2004–2005; test data memorandum in NHTSA Docket No. 2007–29134–003). Additional 32 km/h (20 mph) pole tests conducted on six 2006 and 2007 MY vehicles produced shoulder rib deflections ranging from 18.9–58.4 mm, with an average of 38.0 mm (tests are summarized in Table 1, 73 FR at 32477, and data are available in the NHTSA vehicle crash test database).

[33] There is a typographical error in the final rule regulatory text: the arm position should be measured relative to the ''inferior-superior'' orientation of the upper torso spine box incline. We are correcting this error in this final rule.

parallel to the inferior-superior orientation of the spine box.'' Similarly, in the pelvis-acetabulum test procedure, section 572.198(b)(7), ''Rotate the arm downward to the lowest detent'' is changed to ''Rotate the arm downward to the lowest detent such that the longitudinal centerline of the arm is parallel to the inferior-superior orientation of the spine box.'' In the pelvis-iliac test, section 572.199 does not include arm positioning procedures, but Figure V9–A referenced in this section shows the arm pointing downward and notes that it is in the ''lowest detent.'' For consistency with other test procedures and to clarify arm position, we have added in section 572.199 the following text: ''Orient the arm downward to the lowest detent such that the longitudinal centerline of the arm is parallel to the inferior-superior orientation of the spine box.''

VII. Thorax With Arm Qualification Procedures

a. Peak Impactor Acceleration

The December 14, 2006 final rule (§ 572.195(c)(3)) specified a corridor for the peak acceleration of the impactor.

Requested Change

Petitioners FTSS, the Alliance, and Denton requested that the criterion for peak acceleration of the impactor be limited to all values after 5 ms after time zero. FTSS stated that a review of recent FTSS qualification data shows that 20% of 200 Thorax with Arm impact tests fail if the initial spike (within the first 5 ms) is measured, but only 4% of these same tests fail if the initial acceleration spike is disregarded and the peak acceleration is measured after 5 ms. The petitioner concluded that the initial spike is a result of the initial contact of the probe with the arm and is not a factor when assessing the performance of the ribs. The Alliance also stated that the first peak of the impactor acceleration is due to the inertial response of the arm, which, the petitioner stated, is demonstrated to have greater variability than the response of the thorax (later peak). The Alliance thus recommended a time requirement be added to the performance criteria for the peak impactor acceleration. The Alliance also provided example traces where the inertial peak was both larger and smaller than the peak response of the thorax.

Agency Response

The agency agrees that the peak impactor acceleration should be taken after 5 ms. Data traces from 12 tests at the Transportation Research Center (TRC) were analyzed in the same manner as the pelvis lateral acceleration traces discussed above in this preamble. Unlike the peak pelvis lateral acceleration, however, the first peak of the thorax with arm impactor acceleration is almost always lower than the main response. In fact, in all of these 12 tests, as well as in an additional 11 tests conducted at TRC, 19 at MGA,[34] and in the 25 tests from FTSS that were included in the SAE DTES meeting minutes attached to the Denton petition,[35] the overall peak was after 5 ms. However, given that the petitioners provided evidence that the first peak can be larger than the second, taking the peak impactor acceleration after 5 ms would provide a safeguard against measuring the inertial response. Therefore, the request is granted.

b. Time Zero

As previously discussed for the peak pelvis lateral acceleration in pelvis acetabulum tests, it is necessary to define time zero in the regulatory text for the thorax with arm test. Time zero will be defined as the time of contact between the impact probe and the arm, similar to how the agency has defined time zero elsewhere in this regulation. This definition will be incorporated into section 572.195(b)(11) of the regulatory text.

c. Reported Noise in Potentiometers

The Alliance stated that it observed noise in the data from the half-inch servo potentiometers in the shoulder and thorax-with-arm qualification tests. The SAE DTES meeting minutes reported that drop testing showed clean signals with the potentiometers, so it was not known whether the noise was an electrical problem or a potentiometer problem. The Alliance stated that in some cases, the magnitude of the noise exceeded the magnitude of the primary response and may inadvertently be used as the peak value for comparison to the performance criteria. Data were provided by Denton in Attachments 4 and 5 of the SAE DTES minutes dated January 19, 2007. The petitioners did not recommend a rulemaking action to be taken. The agency analyzed the provided data traces, as well as agency data from thorax-with-arm and shoulder qualification tests, and does not believe there to be a problem with the dummy design. This issue is discussed more fully in the memorandum, ''Analysis of Reported Noise in Potentiometers,'' docketed with this final rule.

VIII. Thorax Without Arm Petitioned Issues

a. Peak Impactor Acceleration

In the December 14, 2006 final rule, § 572.196(c)(3) reads, ''Peak lateral impactor acceleration shall not be less than 14 g and not more than 18 g.''

Requested Change

The Alliance recommended deleting the word ''lateral'' from the term ''peak lateral impactor acceleration.''

Agency Response

This request is granted. The peak impactor acceleration is measured on the long axis of the probe, thus the term ''lateral'' is inappropriate. Section 572.196(c)(3) is changed to state: ''Peak impactor acceleration shall not be * * *,'' as petitioned.

b. Dummy Alignment on the Test Bench

While reviewing the Part 572 regulatory text for the SID–IIsD, the agency found two slight errors in section 572.196(b)(3). The final rule stated: ''Align the outermost portion of the pelvis flesh of the impacted side of the seated dummy tangent to a vertical plane located within 25 mm of the side edge of the bench as shown in Figure V4–A * * *.'' However, as seen in the figures at the end of the subpart, the figure corresponding to the thorax without arm test is Figure V6–A, not V4–A, and the vertical plane for dummy alignment is located within 10 (not 25) mm of the side edge of the bench. The regulatory text is corrected to refer to Figure V6–A and to the 10 mm value.

IX. Abdomen Qualification Procedure

a. Impact Velocity

As previously discussed, the December 14, 2006 final rule specifies an impact velocity of 4.4 ±0.1 m/s for the shoulder and abdomen qualification test procedures. The thorax without arm and pelvis iliac tests use an impact velocity of 4.3 ±0.1 m/s.

Requested Change

The Alliance and Denton/SAE DTES recommended that the impact velocity of the shoulder and abdomen

[34] Overall and ''after 5 ms'' peak accelerations collected at TRC and MGA are included in an agency memo with SID–IIs qualification data (NHTSA–2006–25442–0043) and in the appendix to the report ''Analysis and Development of SID–IIsD Qualification Specifications in Response to Petitions for Reconsideration, (July 1, 2008).'' Additionally, data traces for MGA data are available in crash test reports for pole and MDB crash tests conducted at MGA in support of the FMVSS No. 214 upgrade. Reports are available in NHTSA's vehicle crash database, and test numbers are provided in Docket No. NHTSA–2007–29134–0003.

[35] FTSS was contacted to determine whether the peak probe accelerations were taken after 5 ms. *See* ex parte memorandum, Docket No. NHTSA–2006–25442–0039.

qualification procedures be consistent with the thorax without arm and pelvis iliac tests. The Alliance specifically recommended that all the subject tests use an impact velocity of 4.3 ±0.1 m/s to minimize setup errors in conducting qualification tests. The petitioner also stated that the NPRM proposed an impact velocity of 4.3 ±0.1 m/s and the final rule gave no reason for the increase. The Alliance further stated that NHTSA indicated that the agency will be monitoring the deflections measured by the abdominal ribs and considering for future rulemaking an Injury Assessment Reference Value (IARV) of 45 mm for the ribs. The petitioner stated that in NHTSA's abdominal qualification tests conducted at 4.5 m/s, half of the specimens exceeded 45 mm of deflection in one or both of the abdominal ribs. The Alliance believed that by lowering the impact velocity from 4.4 ±0.1 m/s to 4.3 ±0.1 m/s, the goal of selecting an appropriate impact speed near the magnitude of the research limit is better achieved.

Agency Response

We agree to the petitioners' request. To evaluate the request, we examined the results of the few abdomen tests conducted between 4.2–4.3 m/s prior to the final rule, and the results of new data from VRTC.[36] Using the entire data set, NHTSA re-evaluated the impact velocity responses both at the 4.3±0.1 m/s and 4.4±0.1 m/s impact velocity ranges. A summary of the 4.3 m/s and 4.4 m/s data sets is provided in Table 4. (We must note again, however, that only 13 tests were conducted at impact velocities that produced input energies less than those allowed for the 4.4 ± 0.1 m/s data set. Therefore, the majority of the data in the 4.3 m/s data set is also included in the 4.4 m/s data set.)

TABLE 4—STATISTICAL COMPARISON OF ABDOMINAL QUALIFICATION RESULTS FROM TESTS CONDUCTED AT 4.3±0.1 M/S VS. 4.4±0.1 M/S IMPACT VELOCITY

		Peak probe acceleration (g)	Peak upper rib deflection (mm)	Peak lower rib deflection (mm)	Peak T12 lateral acceleration (g)
4.3 m/s impact velocity	N	64	64	64	64
	Mean	13.97	41.99	39.78	11.71
	SD	0.93	3.00	3.47	1.07
	CV	6.64%	7.15%	8.72%	9.17%
4.4 m/s impact velocity	N	115	115	115	115
	Mean	13.78	43.62	42.10	11.78
	SD	0.90	2.53	2.92	1.07
	CV	6.57%	5.80%	6.95%	9.09%

As shown in Table 4, the mean responses were somewhat lower and more variable at 4.3 ± 0.1 m/s for rib deflection measurements. However, we have accounted for this by lowering and slightly expanding the qualification corridor bounds, as discussed in Section XI.d.

While we have reduced the test's impact velocity, we do not agree with the petitioner's argument that the impact velocity should be reduced because the 4.4 ±0.1 m/s test speed is too severe. We reduced the velocity because the deflections obtained in the 4.3 ±0.1 m/s data set are also close to the proposed IARV, and because we do not anticipate any problems from conducting the test at a slightly lower speed. When looking at abdomen qualification tests with input energies corresponding to impact velocities of 4.4 ±0.1 m/s, approximately 20% of abdominal rib deflections are greater than 45 mm. This percentage drops to about 10.5% for the 4.3 ±0.1 m/s data set. Based on these percentages, we believe that either impact speed would be acceptable in terms of the test's severity compared to the IARV. But, because the test was proposed to be conducted at 4.3 ±0.1 m/s in the NPRM, and because we do not anticipate any problems with reducing the test speed, we are granting the petitioner's request. Details about the qualification data and performance corridors are provided in the report ''Analysis and Development of SID–IIsD Qualification Specifications in Response to Petitions for Reconsideration,'' *supra*, and in section XI of this preamble.

b. Dummy Alignment on the Test Bench

In section 572.197(b)(3), the December 14, 2006 final rule stated: ''Align the outermost portion of the pelvis flesh of the impacted side of the seated dummy tangent to a vertical plane located within 25 mm of the side edge of the bench as shown in Figure V7–A * * *.'' However, as seen in the figure at the end of the subpart, the vertical plane for dummy alignment is located within 10 (not 25) mm of the side edge of the bench. The regulatory text is corrected to refer to the 10 mm value.

X. Other Testing Issues

a. Dummy Clothing

The December 14, 2006 final rule specified that the shoulder, thorax with arm, thorax without arm and abdomen qualification tests be conducted with the dummy wearing its torso jacket (180–3450) and cotton underwear pants. The pelvis-acetabulum and pelvis-iliac tests, however, were to be conducted without the torso jacket and without the cotton underwear pants. The dummy was not to wear shoes for any of the above qualification tests.

Requested Change

The Alliance petitioned that all full-body qualification impact tests be conducted with the torso jacket, cotton underwear pants and shoes installed due to time and effort involved in removing and replacing the dummy's clothes and shoes.

Agency Response

The request is denied. The clothing specifications were put in place to better ensure that accurate and repeatable test measurements could be obtained during dummy qualification. For the pelvis-

[36] Results of tests conducted by VRTC between 4.2 and 4.3 m/s can be found in an agency memorandum providing the revised SID–IIs qualification data set (NHTSA–2006–25442–0043), and in the report ''Analysis and Development of SID–IIsD Qualification Specifications in Response to Petitions for Reconsideration,'' July 1, 2008. Seven additional tests conducted after this memorandum was placed in the docket are included in the appendix of the previously mentioned qualification report.

iliac and pelvis-acetabulum tests, the cotton underwear pants are removed to eliminate the effect that the clothing could have on the measured response. Additionally, removal of the pants simplifies alignment of the probe and better ensures that probe interaction with the dummy is consistent from test to test. The chest jacket must be removed because the ''crotch strip'' (drawing 180–3450, sheet 2 of 3), which is guided through the dummy's legs to attach the front of the jacket to the back of the jacket, can cause the dummy to rock slightly on the test surface. This ''rocking'' can also lead to problems with misalignment of the probe or inconsistent probe interaction with the dummy. Further, removal of the chest jacket is very easy and not burdensome.

The agency considered whether removing or adjusting the crotch strip, while keeping the chest jacket on the dummy, would simplify the test procedure. The agency determined that although it would be possible to conduct the pelvis tests with only the crotch strip removed or adjusted, keeping the jacket on the dummy for the pelvis acetabulum test would make positioning the dummy against the seat back more difficult.

Accordingly, for the reasons provided, the dummy clothing specifications will remain as specified in the final rule.

b. Recovery Time Between Tests

The December 14, 2006 final rule specified a minimum recovery time of 30 minutes between repeat tests of the same qualification test for the neck qualification test. A recovery time of 30 minutes is also given for the shoulder, thorax, abdomen and pelvis-acetabulum qualification tests in the 2006 certification procedures document. The head, which references the procedure given in 49 CFR 572.112(a), is given a recovery time of 2 hours between repeat tests in the December 2006 final rule. The pelvis-iliac test procedure provided in the 2006 certification procedures document specifies a recovery time of 1 hour.

Requested Change

The Alliance petitioned for a minimum recovery time of 30 minutes between repeat tests of the same qualification test for all tests, except for the lateral head drop test, which the petitioner recommended should have a recovery time of 2 hours between repeats of the same qualification test.

Agency Response

The petitioner suggested a change to the final rule's specification of the pelvis-iliac recovery time but did not provide any data or rationale in support of its request. VRTC first conducted quasi-static tests to determine if a 30 minute recovery time, which is common in Hybrid III dummy qualification test procedures, would be sufficient for full recovery of the iliac wing. Because these tests are more controlled than dynamic tests, it is easier to determine if variability in iliac wing response is due to the recovery time, rather than some other factor.

As shown in the report ''SID–IIsD Iliac Wing Studies'' docketed with this final rule, results from quasi-static tests indicated that reducing the iliac recovery time to 30 minutes from 1 hour did not affect the iliac wing responses. However, because quasi-static tests only account for the response of the iliac wing and not the entire pelvis assembly, VRTC also conducted dynamic tests to determine if the pelvis assembly will perform consistently with a recovery time of only 30 minutes. VRTC performed a series of ten iliac qualification tests (using the Material #3 with standoffs wing and a backer plate), where one test was performed on a fully recovered pelvis to serve as a baseline, four tests were conducted after a recovery time of 30 minutes, and five tests were conducted after a recovery time of one hour.

Results from the iliac qualification tests are shown in the ''SID–IIsD Iliac Wing Studies'' report. The results indicated that after successive impacts with 30 minutes or one hour recovery time, the iliac responses from each recovery time showed a trend of slight increase in magnitude. In addition, tests performed with 30 minutes of recovery time between tests showed overall larger magnitude responses than tests with one hour recovery time. Because the iliac wing did not require more than 30 minutes of recovery time according to the quasi-static data, NHTSA determined that this rise in response is probably attributable to the pelvis flesh needing more time for recovery, as the flesh part is a major component of the pelvis that is directly impacted. Since a major element of the pelvis flesh is foam, it appears that the foam needs more than one hour to fully recover from impact. To determine what recovery time would be appropriate, the agency conducted six additional pelvis-iliac qualification tests, with one test conducted as another baseline response from a fully recovered pelvis, and five tests performed with two hours of recovery time between each test. The results of this series did not show a trend of increase in response with successive tests, as shown in the ''SID–IIsD Iliac Wing Studies'' report. Additionally, when comparing the average responses of tests for all recovery times, the responses after two hour recovery times were most similar to those of fully recovered dummy pelves, indicating that after two hours, the pelves have returned to a fully-recovered state (Table 5).

Since the dynamic test results indicate that a 30 minute recovery time is not long enough to ensure full recovery of the dummy's pelvis, and no supporting data were provided by the petitioner, we are denying the Alliance petition. Furthermore, since investigation of this issue revealed that two hours between tests is necessary to ensure the dummy pelvis is fully recovered, we are implementing a two hour recovery time for the pelvis-iliac test. Also, given that the pelvis flesh is also impacted in the pelvis-acetabulum test, the agency believes it is logical to assign a recovery time of two hours for the pelvis-acetabulum test as well.[37] These recovery times, as well as 30 minute recovery times for the shoulder, thorax with arm, thorax without arm and abdomen qualification tests are added to their respective sections in the Part 572 regulatory text.

[37] Qualification corridors for the pelvis iliac and acetabulum tests were determined with data collected after 30 minute recovery times. However, we do not expect this to have an effect on the placement of the corridors for the following reasons. In the pelvis-iliac test, peak impactor acceleration and peak iliac force data from FTSS were generally lower than NHTSA data, resulting in corridors that would easily include lower NHTSA responses, if a longer recovery period would have produced somewhat lower measurements. For the pelvis acceleration performance criterion, some of the NHTSA data is on the low side of corridor; however, the established corridor is already very wide to account for the wide range of responses from NHTSA and FTSS, and it would not be desirable to widen it any further, even if some NHTSA responses would fall slightly below the corridor if a two hour recovery time was implemented. In the pelvis acetabulum test, many of the data came from tests where dummies were impacted once or twice per day, meaning that any rise in response due to repeat tests would probably have a minimal impact on the data set as a whole (and therefore, have a minimal impact on the corridor placement).

TABLE 5—AVERAGE PELVIS-ILIAC QUALIFICATION MEASUREMENTS FOR FULLY, 30 MINUTES, 1 HOUR, AND 2 HOUR RECOVERED DUMMY PELVES

	Average peak probe acceleration (g)	Average peak pelvis Y acceleration (g)	Average peak iliac force (N)
Fully Recovered	43	38	4942
½ hr recovery	45	40	5163
1 hr recovery	44	39	5044
2 hr recovery	43	37	4934

c. Soak Time

The December 14, 2006 final rule (572.200) provides the requirements for instrumentation and test conditions and states at 572.200(j) that ''Performance tests are conducted unless specified otherwise, at any temperature from 20.6 to 22.2 degrees C (69 to 72 degrees F) and at any relative humidity from 10% to 70% after exposure of the dummy to those conditions for a period of 3 hours.''

Requested Change

Denton ATD/SAE DTES stated that the final rule requires a 3 hour soak time instead of the normal 4 hour soak time for all other dummies. It noted that prior temperature studies have shown that even 4 hours might be insufficient. It recommended that NHTSA make the soak time 4 hours to match all other dummies.

Agency Response

This request is granted. This final rule amends 572.200(j) to require a 4 hour soak time to match the requirements of other dummies. We do not believe that requiring an additional hour of soak time will have any negative effect on the dummy's responses. Further, a 4 hour soak time for all test components was specified in the FTSS SID–IIs User Manual (December 4, 2003). The revised qualification procedures document has also been updated to reflect this change.

d. Tolerance on the Impactor Mass

The impactor mass tolerance for the SID–IIsD shoulder, thorax with arm, thorax without arm, abdomen, pelvis acetabulum and pelvis iliac qualification tests is specified in § 572.137(a) in Subpart O of 49 CFR part 572, which sets forth specifications for the Hybrid III 5th percentile adult female test dummy (HIII5F). The impactor mass is specified as ''13.97 ± 0.23 kg (30.8 ±0.05 lbs).'' [38]

Requested Change

The Alliance recommended that the tolerance on the impactor mass for shoulder, thorax with arm, thorax without arm, abdomen, pelvis acetabulum and pelvis iliac qualification tests for the SID–IIs be changed to ±0.023 kg, rather than ±0.23 kg. The SAE DTES supported this requested change.

Agency Response

The request is denied. The agency has evaluated the probe mass tolerances specified for other Part 572 crash test dummies. Table 6 displays the results of this evaluation.

TABLE 6—IMPACT PROBE MASSES AND TOLERANCES FOR DUMMIES SPECIFIED IN 49 CFR PART 572

Part 572 subpart & dummy name	Probe type	Probe metric/english specification and tolerance	Tolerance percentage of specified probe mass/weight
Subpart N, Six-year-old Child Test Dummy, Beta Version.	Thorax	2.86±0.02 kg (6.3±0.05 lb)	0.70 (.79)
Subpart N, Six-year-old Child Test Dummy, Beta Version.	Knee	0.82±0.02 kg (1.8±0.05 lb)	2.44 (2.78)
Subpart P, HIII 3-Year-Old Child Crash Test Dummy, Alpha Version.	Thorax	1.70±0.02 kg (3.75±0.05 lb)	1.18 (1.33)
Subpart V, SID–IIs Side Impact Crash Test Dummy (refers to Subpart O, HIII5F).	Thorax/Abdomen/Iliac (for HIII5F, Thorax).	13.97±0.23 kg (30.8±0.05 lb) *tolerances not equivalent	1.65 (0.162)
Petitioned SID–IIs/HIII5F probe mass tolerance.	Thorax/Abdomen/Iliac (for HIII5F, Thorax).	13.97±0.023 kg	0.164

The petitioner's request to change the mass tolerance to 0.023 kg would result in a tolerance that is similar to the 3-year-old and 6-year-old dummy probe tolerances (0.02 kg). However, 0.02 kg is 0.70% to 2.44% of the mass of the child dummy probes. Because the SID–IIs/HIII5F probe mass is larger than those for the child dummies, the requested 0.023 kg tolerance is only 0.16% of the probe mass for the 5th percentile adult female dummies, which is a very tight tolerance for the larger probe. The current mass tolerance of 0.23 kg is more consistent with child dummy probe mass tolerances in terms of the *percentage* of the probe mass (0.23 kg is 1.65% of the SID–IIs/HIII5F probe mass). Further, although it is possible for the probes to be produced to a tight tolerance of 0.16%, several labs, including those at VRTC, TRC, MGA and GM, would not meet the mass specification with this lower tolerance for all probes (Table 7). Under a 0.23 kg tolerance, the VRTC and TRC probe masses would meet specifications and

[38] There was an incorrect conversion in § 572.137(a) between the metric and English tolerance. The ''0.05 lbs'' should read ''0.5 lbs.'' This error is corrected by today's final rule. We have also corrected the tolerance for the HIII–5F knee probe in 572.137(b) to be 2.99±0.23 kg (6.6±0.5 lbs).

the MGA probes would be only slightly outside the allowable range. Because data showing a need to change the tolerance of 0.23 kg to 0.023 kg has not been shown, the agency is denying the request.

TABLE 7—SID–IIsD IMPACT PROBE MASSES AT VARIOUS LABORATORIES

Lab	Probe mass	Meets 0.23 kg tolerance?	Meets 0.023 kg tolerance?
MGA	14.22 kg (all)	NO	NO.
TRC (before 5/4/07)	13.97 kg (all)	YES	YES.
TRC (5/4/07–present)	13.94 kg (sh/thx/acet)	YES	NO.
	13.96 kg (abd and iliac)	YES	YES.
VRTC	14.1195 kg (sh/thx/acet); 14.1014 kg (abd); 14.1558 kg (iliac).	YES	NO.
FTSS	13.950 kg (sh/thx/acet); 13.972 kg (abd); 13.955 kg (iliac).	YES	YES.
GM	14.302 kg (abdomen)	NO	NO.

e. Neck Cable Torque in PADI

In the ''Procedures for Assembly, Disassembly, and Inspection (PADI) of the SID–IIsD Side Impact Crash Test Dummy'' [39] incorporated by reference by the December 14, 2006 final rule, a torque of 10–12 in-lb is required for the neck cable jam nut.

Requested Change

Denton/SAE DTES suggested that since the SID–IIs neck is the same as that of the HIII5F, the neck cable jam nut torque specification should be changed to 12±2 in-lb to match the HIII5F.

Agency Response

This request is denied. The petitioner did not provide any neck qualification data to support its recommendation. To evaluate the request, VRTC conducted neck qualification tests with neck cable torques of 12 and 14 in-lb to determine the effect of increased cable torque on neck response. The results of these tests are presented and explained in a memorandum entitled, ''Results of Neck Cable Torque Investigation,'' which has been placed in the agency's docket for today's final rule. The results indicated that one out of three tests on one neck and two out of three tests on a second neck tested with a cable torque of 14 in-lb failed the neck qualification test (specifically, the peak OC moment was higher than allowed by the performance criteria). In contrast, all six tests with a neck cable torque of 12 in-lb and meeting pendulum deceleration requirements passed the neck qualification test. Data from the forward and headform potentiometers indicated that the tests conducted with a cable torque of 14 in-lb produced a lower peak rotation than those conducted at 12 in-lb., i.e., the higher cable torque appears to cause a slightly stiffer neck response. Although the difference in response is small, at this higher torque laboratories may experience difficulty in passing the neck qualification test performance criteria, especially if the neck is somewhat stiff, as the performance corridors were formed using necks with cable torques of 10–12 in-lb. Accordingly, the agency has decided against changing the neck cable torque specification in the PADI.

f. Pendulum Deceleration Pulse

The December 14, 2006 final rule (572.193(c)) specifies that the pendulum deceleration pulse is characterized in terms of decrease in velocity as obtained by integrating the pendulum acceleration output from time zero. In an interpretation request received by NHTSA on May 21, 2008, FTSS asked about the time measurement at >25.0 and <100 milliseconds (ms). FTSS asked whether the requirement is to record the singular peak value of the Pendulum Delta-V, or whether the Pendulum Delta-V must fall between −5.50 to −6.20 meters per second throughout the time period.

Agency Response

We have clarified the table in 572.193(c)(1) such that the specified pendulum delta V for 25–100 ms applies to the peak velocity in that time period. We believe that there is no need to record the pendulum Delta-V over the range, as once the pendulum acceleration stops, the pendulum Delta-V becomes relatively constant, reaching an overall peak just after 25 ms and slightly decreasing in magnitude after that. Further, the peak may be easier to tune than the whole range.

g. Neck Potentiometers

The December 14, 2006 final rule (572.193) specifies the neck assembly qualification tests. The test procedure calls for the attachment of the neck-headform assembly in accordance with Figure V2–A or V2–B (depending on the direction of impact) of the Appendix of the subpart. These figures show the use of three angle potentiometer assemblies for measuring the maximum translation-rotation of the midsagittal plane of the headform disk.

Requested Change

Since only two potentiometers (''pots'') are used for the measurement requirements of the neck qualification test, Denton/SAE DTES inquired about either eliminating the third pot (the aft/inner angle pot assembly shown in Figures V2–A, –B, –C) or making it optional, and including a spacer mass in its place.

Agency Response

We do not agree to this change. Denton/SAE DTES is correct that only the fore/outer angle potentiometer assembly and the headform angle potentiometer assembly are used to calculate the maximum translation/rotation of the headform. However, the aft/inner potentiometer assembly has been installed throughout the development of the dummy and neck performance corridors, as use of this assembly was originally specified in the FTSS SID–IIs user's manual. The agency has not conducted any tests without this potentiometer assembly, and no data of this kind were provided to support removing the third pot. Therefore, it is unknown how removal of this assembly will affect the overall response characteristics of the neck during this test. In order to obtain neck qualification results consistent with those that have been derived using all three potentiometers, the aft/inner angle pot assembly cannot be eliminated without compensating for the absent part. The petitioner has not provided a replacement part that can achieve this end result.

[39] NHTSA Docket NHTSA–2006–25442–14, page 19.

XI. Qualification Performance Corridors

In response to the final rule, the petitioners provided additional qualification data and recommendations for revised performance corridors. To the extent possible, NHTSA incorporated the data that had been acquired in tests conducted according to the final rule test procedures, or to the procedures amended today, as appropriate, into the NHTSA data set.[40] To provide as extensive and variable a data set as possible, the agency also added to this data set tests performed at TRC that had been overlooked at the time of the final rule, tests conducted at TRC following the publication of the final rule, and shoulder, abdomen, and pelvis iliac qualification tests conducted at VRTC in support of the agency's evaluation of the petitions for reconsideration. Additionally, the ''time-of-purchase'' qualification test results performed at FTSS on dummies purchased by the agency for research or compliance purposes were added.

However, some data from these sources were not used because the agency was not confident that the tests were conducted under the appropriate test procedures and conditions. The details of test removal are described in the report, ''Analysis and Development of SID–IIsD Qualification Specifications in Response to Petitions for Reconsideration,'' *supra.* As discussed in that document, qualification tests were removed for the following reasons: Impact energy did not fall within the allowable range (see discussion below); the time history trace showed unusual behavior; or the test was improperly conducted.

With regard to impact energy, during NHTSA's examination of the December 2006 final rule data set, the agency found that many of the probe acceleration values were calculated from probe force values using an assumed probe mass of 13.97 kg. To obtain more precise acceleration values with which to form performance corridors, the agency requested information about probe masses from the test labs that had provided probe force rather than acceleration data. We found that the probe masses used at some test laboratories were greater than allowed by the probe mass tolerance specified in 572.137(a). To account for these higher probe masses, we calculated the allowable impact energy range using the specified tolerances for mass and velocity and the impact energy of each individual test (where Energy = $\frac{1}{2}mv^2$). We removed from the data set tests with impact energies that did not meet the allowable range. This process of ''filtering'' tests by impact energy rather than impact velocity was performed only for the purpose of evaluating the performance criteria. When a test lab conducts the Part 572 tests specified in subpart V, we expect them to ensure that the probe mass and impact velocity requirements specified in subpart V are met.

We considered several other factors in responding to the petitions pertaining to the revision of the performance corridors. Performance corridors are generally based on the mean, standard deviation (SD), and coefficient of variation (CV) of the data set. Bounds are preliminarily set at a certain distance from the mean value, depending on the CV. Corridor bounds are initially set based on the CV of the data set as follows: for CV less than 3%, the bounds are set at ±3 standard deviations (SD) from the mean; for CV between 3% and 5%, ±2 SD from the mean; for CV greater than 5%, ±10% from the mean. After setting a preliminary corridor based on the CV, the bounds are rounded to the next whole number away from the mean to obtain the ''statistically-derived'' corridor. Either bound could then be adjusted slightly to account for outside data points, if warranted (71 FR at 75360). In its petition for reconsideration, Denton/SAE DTES recommended that ±3 standard deviations (such that ~99% of the available data would be included) be used to create corridors instead of ±2 standard deviations (which includes only ~95% of the available data) because, the petitioner believed, there was limited data accounting for lab-to-lab and technician-to-technician variability to create acceptable corridors that would accommodate this expected level of variation.

We have considered Denton's request but have decided against its recommendation. Use of the NHTSA guidelines for setting performance corridors better ensures that the corridor width is appropriate for the variation in the data set, because the width of each corridor is based on the CV of the data. Forming corridors according to ±3 standard deviations from the mean can result in corridors that provide an unnecessary ''buffer zone'' around the data, and allow for too large a range of responses. Performance corridors must be constrictive enough to identify and disqualify dummies whose responses fall significantly away from the mean.

Further, the petitioner made the suggestion about using a corridor width of ±3 standard deviations out of concern about the limited variability in the data. The revised data set adopted today in response to the petitions for reconsideration incorporates all the relevant test results that have been made available and represents five laboratories and a much larger sample of dummies than the December 2006 final rule data set, which represented two laboratories and four dummies for all tests but the iliac test (which represented four dummies and one laboratory).[41] We believe this expanded data source is sufficient to capture the behavior of the majority of dummies tested at different labs.

Another factor we considered in responding to the petitions pertaining to the performance corridors related to the use of rounded integers by NHTSA in developing the corridors of the December 14, 2006 final rule. NHTSA published a final report ''Development of Certification Performance Specifications for the SID–IIsD Crash Test Dummy,'' [42] in the establishment of qualification corridors. The report included tabulated data, as well as plots of the adopted corridors. In its petition for reconsideration, Denton/SAE DTES noted that many of the data presented in this report appear to be rounded to even integers for the T1 acceleration in the thorax without arm test.

We reviewed the data in response to the petition and have observed that rounded integers were used. To improve the data tables, we have replaced the rounded values for T1 acceleration and other thorax without arm qualification test measurements, as well as measurements in other tests such as shoulder, abdomen, *etc.,* with more precise values obtained from NHTSA crash test reports, supporting reports for the SID–IIsD final rule,[43] and electronic data (as available). The improved data were used to evaluate the performance criteria for the thorax without arm and

[40] As noted earlier, the Alliance data provided as part of their petition for reconsideration was considered in the formation of recommended corridors but was not incorporated into the NHTSA data set for inclusion in the statistical analyses.

[41] The shoulder test had samples of 13 different dummies; the thorax with and without arm tests had samples of at least 29–30 different dummies; the abdomen test had samples of 10 different dummies; the pelvis acetabulum test had a sample of 18 different dummies; and the pelvis iliac test used 48 different iliac wings and 6 pelvis skins.

[42] Available in Docket No. NHTSA–2006–25442–16.

[43] Data were obtained from the following reports: (a)''Certification and Maintenance Records of the SID–IIs Build Level D Dummies Used in NHTSA Rulemaking Support Tests, May 2005 through November 2005,'' NHTSA Office of Vehicle Safety Research, February 2006, Docket No. 25442–5; (b) ''Repeatability and Reproducibility Analysis of the SID–IIs Build Level D Dummy in the Certification Test Environment,'' Jessica Gall, MGA Research Corporation, September 2005, Docket No. 25442–6.

all other qualification tests. The revised tables are shown in the report, ''Analysis and Development of SID–IIsD Qualification Specifications in Response to Petitions for Reconsideration,'' *supra.*

Table 8 shows the whole-body qualification tests conducted in each body region that are available for corridor formation. However, note that for some measurements within each test, responses are not present or not applicable.[44]

TABLE 8—TOTAL NUMBER OF QUALIFICATION TESTS USED TO FORM QUALIFICATION CORRIDORS

Test performer	Shoulder (4.3 m/s)	Thorax w/ arm	Thorax w/o arm	Abdomen (4.3 m/s)	Pelvis-Acetabulum	Pelvis-Iliac
NHTSA—final rule data set	26	48	51	23	46	.....
NHTSA—newly added data	15	11	11	16	15	123
FTSS with NHTSA R&D/Compliance dummies	14	28	28	7	56	.....
FTSS—petition for reconsideration	12	25	25	16	.....	83
GM—Denton/SAE DTES petition for reconsideration	.....	.....	.....	2	.....	206
Total	*67	**112	115	64	†117	155

*50 measurements were available for the peak upper spine (T1) acceleration.
**66 measurements were available for the peak impactor acceleration after 5 ms.
†61 measurements were available for the peak pelvis lateral acceleration after 6 ms.

a. Shoulder Qualification Corridors

The December 14, 2006 final rule (572.194) specified a shoulder qualification procedure where, for a specified impact velocity, performance corridors were set for: peak shoulder rib deflection, peak lateral acceleration of the upper spine (T1), and peak impactor acceleration. The values are shown in Table 9.

Requested Change

The Alliance, FTSS and Denton/SAE DTES petitioned for changes to these qualification corridors. The Alliance recommended a corridor that is ±2 s.d. from the mean of the data pooled from FTSS and NHTSA. In accordance with its recommendation that the impact speed for the test be reduced to 4.3 ±0.1 m/s, the Alliance excluded tests with an impact speed greater than 4.4 m/s in their January 2007 petition, however, in their December 2007 petition, they provided data for tests conducted with an impact velocity of 4.4±0.1 m/s. FTSS created corridors based on a 4.4 ±0.1 m/s impact speed. It pooled data from FTSS and NHTSA and created corridors using the NHTSA procedure. Denton/SAE DTES created corridors based on a 4.4 ±0.1 m/s impact speed. It pooled data from FTSS, NHTSA, MGA and TRC and created corridors at ±3 s.d. from the mean. It was not clear from Denton if any test data was excluded from the data pool based on impact speed. The petitioners' recommended corridors are set forth in Table 9.

TABLE 9—COMPARISON OF PETITIONED SHOULDER QUALIFICATION CORRIDORS

Shoulder qualification test	December 14, 2006 final rule corridor	Petitioned recommendations			
		Alliance—January 2007	Alliance—December 2007	FTSS	Denton/SAE DTES
Impact Velocity (m/s)	4.3–4.5	4.2–4.4	Same as FR	Same as FR	Same as FR.
Peak Shoulder Rib Deflection (mm)	30–37	31–37	.....	Same as FR	29–38.
Peak Upper Spine Lateral Accel. (g)	17–19	16–22	17–22	17–21	15–23.
Peak Impactor Acceleration (g)	14–18	14–17	.....	Same as FR	13–19.

Agency Response

As discussed earlier in this preamble, the agency decided to lower the impact velocity to 4.3 ±0.1 m/s for the shoulder qualification test. Therefore, only tests conducted within the energy range corresponding to this impact velocity range were used to establish new performance corridors. Performance corridors for the shoulder were formed following the method described earlier, using the mean, SD, and CV of the data set and setting bounds at a certain distance from the mean value, depending on the CV. The report ''Analysis and Development of SID–IIsD Qualification Specifications in Response to Petitions for Reconsideration'' provides the statistics of the data and compares the corridors established in this rule to the petitioners' recommendations. For the peak upper spine lateral acceleration and the peak impactor acceleration, the statistically-derived corridors provided in Table 10 were adopted. The lower bound of the peak shoulder rib deflection corridor was expanded by 2 mm to account for expected lower deflections at impact velocities from 4.2–4.3 m/s. The corridors established in this final rule are in agreement with or slightly larger than those proposed by the Alliance (December 2007) and FTSS, and the shoulder deflection and impactor acceleration corridors are close to those

[44] For each test, multiple dummy measurements are taken to check whether the dummy meets the performance criteria. But, in some tests, one or more measurements might not have been collected, or might have been removed. For example, in the table there are 120 shoulder tests, but as indicated in the footnote to the table, there were only 69 T1 acceleration measurements. Sometimes there is only one measurement missing, *e.g.,* one of the upper rib deflection values was deleted from the thorax with arm data set because the recorded value was a late spike. So, even though the table indicates that there are 112 thorax with arm tests, there are not 112 upper rib deflection measurements. The number of measurements used for forming each performance corridor are provided in the report ''Analysis and Development of SID–IIsD Qualification Specifications in Response to Petitions for Reconsideration,'' July 1, 2008.

recommended by Denton/SAE DTES. Although peak upper spine lateral acceleration corridor is somewhat narrower than that suggested by Denton/SAE DTES, we feel that it sufficiently includes the data and should not be made wider. The final corridors are shown in Table 10.

TABLE 10—SHOULDER QUALIFICATION CORRIDORS

Shoulder qualification measurement	December 14, 2006 corridor	Statistical corridor	Today's final rule corridor
Peak Shoulder Rib Deflection (mm)	30–37	30–37	28–37
Peak Upper Spine Lateral Accel. (g)	17–19	17–22	17–22
Peak Impactor Acceleration (g)	14–18	13–18	13–18

b. Thorax with Arm Qualification Corridors

The December 14, 2006 final rule (572.195) specified a thorax with arm qualification test involving the measurement of seven dummy responses: Peak shoulder rib deflection, peak thoracic rib deflections for the upper, middle, and lower ribs, peak upper and lower spine lateral accelerations, and peak impactor acceleration.

Requested Change

The Alliance and Denton/SAE DTES petitioned for changes to these qualification corridors. As discussed earlier in this preamble, these petitioners, as well as FTSS, had requested that the peak impactor acceleration be taken after 5 ms to avoid measurement of an inertial peak. The Alliance and Denton/SAE DTES recommended new corridors based on their analyses of the NHTSA final rule data set plus additional tests conducted by FTSS, accounting for the 5 ms limit. Denton/SAE DTES also suggested that corridors should be formed based on ±3 standard deviations rather than ±2 standard deviations from the mean because, the petitioner believed, data from very few labs are available to provide sufficient lab-to-lab variation in the data set. Table 11 provides a summary of petitioner-recommended corridors.

TABLE 11—COMPARISON OF PETITIONED THORAX WITH ARM QUALIFICATION CORRIDORS

Thorax with arm qualification test	December 14, 2006 final rule corridor	Petitioned recommendations			
		Alliance—January 2007	Alliance—December 2007	FTSS	Denton/SAE DTES
Impact Velocity (m/s)	6.6–6.8	Same as FR	.....	Same as FR	Same as FR.
Peak Shoulder Rib Deflection (mm)	31–40	30–41	.....	Same as FR	27–44.
Peak Upper Thorax Rib Deflection (mm)	26–32	25–32	.....	Same as FR	24–33.
Peak Middle Thorax Rib Deflection (mm)	30–36	30–35	.....	Same as FR	29–36.
Peak Lower Thorax Rib Deflection (mm)	32–38	Same as FR	.....	Same as FR	31–39.
Peak Upper Spine Lateral Accel. (g)	34–43	34–44	.....	Same as FR	32–46.
Peak Lower Spine Lateral Accel. (g)	28–35	28–36	30–37	Same as FR	26–38.
Peak Impactor Acceleration after 5 ms (g)	31–36	Same as FR	30–36 †	Same as FR	30–37.

† Conditions were not provided, but it is assumed that peaks were taken after 5 ms.

Agency Response

The mean, standard deviation, and CV of the expanded data set were used to generate performance corridors for the thorax with arm qualification test as described in ''Analysis and Development of SID–IIsD Qualification Specifications in Response to Petitions for Reconsideration.'' Following statistical analysis and visual examination of the data, only three corridors were changed from those given in the December 2006 final rule: The peak upper thorax rib deflection, the peak lower spine lateral acceleration, and the peak impactor acceleration (after 5 ms). The upper thorax rib deflection and impactor acceleration corridors were changed to agree with the statistically-derived corridors, which are also in agreement with (or slightly larger than) the corridors recommended by the Alliance and FTSS. The lower spine acceleration corridor was expanded slightly from the statistically-formed corridor to better include the spread of the data. The rest of the performance criteria were unchanged, due to the fact that the December 2006 final rule corridor sufficiently contained the data and was in agreement with, or slightly larger than, the statistically-derived corridor. The final corridors are shown in Table 12.

TABLE 12—THORAX WITH ARM QUALIFICATION CORRIDORS

Thorax with arm qualification measurement	December 14, 2006 Corridor	Statistical Corridor	Today's Final Rule Corridor
Peak Shoulder Rib Deflection (mm)	31–40	32–40	31–40
Peak Upper Thorax Rib Deflection (mm)	26–32	25–32	25–32
Peak Middle Thorax Rib Deflection (mm)	30–36	30–35	30–36
Peak Lower Thorax Rib Deflection (mm)	32–38	32–38	32–38
Peak Upper Spine Lateral Accel. (g)	34–43	34–43	34–43
Peak Lower Spine Lateral Accel. (g)	28–35	29–36	29–37
Peak Impactor Acceleration (g)	31–36	N/A	N/A

TABLE 12—THORAX WITH ARM QUALIFICATION CORRIDORS—Continued

Thorax with arm qualification measurement	December 14, 2006 Corridor	Statistical Corridor	Today's Final Rule Corridor
Peak Impactor Acceleration after 5 ms (g)	N/A	30–36	30–36

c. Thorax without Arm Qualification Corridors

The December 14, 2006 final rule (572.196) specified a thorax without arm qualification procedure in which, for a specified impact velocity, performance corridors were set for: peak upper thorax rib deflection, peak middle thorax rib deflection, peak lower thorax rib deflection, peak upper spine lateral acceleration, peak lower spine lateral acceleration, and peak impactor acceleration.

Requested Change

The Alliance, FTSS and Denton/SAE DTES petitioned for changes to these qualification corridors. The Alliance pooled data from FTSS and NHTSA and created corridors using ±2 s.d. from the mean. FTSS pooled data from FTSS and NHTSA and created corridors using NHTSA's procedure (based on the mean, SD, and CV of the data set), except the method used to create the T12 corridor used ±2 s.d. instead of 10%, as the petitioner believed it was more appropriate due to the fact that this acceleration has a low magnitude in this test. Denton/SAE DTES pooled data from FTSS, NHTSA, MGA and TRC to create corridors using ±3 s.d. from the mean. The corridor recommendations are summarized in Table 13.

TABLE 13—COMPARISON OF PETITIONED THORAX WITHOUT ARM QUALIFICATION CORRIDORS

Thorax without arm qualification test	December 14, 2006 final rule corridor	Petitioned recommendations		
		Alliance—January 2007	FTSS	Denton/SAE DTES
Impact Velocity (m/s)	4.2–4.4	Same as FR	Same as FR	Same as FR
Peak Upper Thorax Rib Deflection (mm)	33–40	Same as FR	Same as FR	31–41
Peak Middle Thorax Rib Deflection (mm)	39–45	39–44	Same as FR	37–45
Peak Lower Thorax Rib Deflection (mm)	36–43	Same as FR	Same as FR	34–44
Peak Upper Spine Lateral Accel. (g)	14–17	Same as FR	Same as FR	13–17
Peak Lower Spine Lateral Accel. (g)	7–10	7–11	7–11	6–12
Peak Impactor Acceleration (g)	14–18	15–18	Same as FR	Same as FR

Agency Response

Based on an impact velocity of 4.3±0.1 m/s, the performance corridors were formed based on the statistics of the expanded data set (*see,* ''Analysis and Development of SID–IIsD Qualification Specifications in Response to Petitions for Reconsideration''). Four of the thorax without arm performance criteria are changed in this final rule. Two of these, the peak upper thorax rib deflection and the peak upper spine lateral acceleration, were expanded slightly, in agreement with the statistically-derived corridor from the new data set. The peak lower thorax rib deflection corridor was expanded beyond the statistically-derived corridor because the statistical corridor excluded data that met the final rule corridor. As indicated by FTSS, the magnitude of the peak lower spine acceleration is fairly low. Therefore, we agree with the petitioner that applying a corridor of ±10% would be inappropriate, and have instead set this corridor to agree with the Alliance and FTSS recommendations. The statistical and adopted qualification corridors are as shown in Table 14.

TABLE 14—THORAX WITHOUT ARM CORRIDORS

Thorax without arm qualification measurement	December 14, 2006 corridor	Statistical corridor	Today's final rule corridor
Peak Upper Thorax Rib Deflection (mm)	33–40	32–40	32–40
Peak Middle Thorax Rib Deflection (mm)	39–45	37–45	39–45
Peak Lower Thorax Rib Deflection (mm)	36–43	35–42	35–43
Peak Upper Spine Lateral Accel. (g)	14–17	13–17	13–17
Peak Lower Spine Lateral Accel. (g)	7–10	8–11	7–11
Peak Impactor Acceleration (g)	14–18	14–18	14–18

d. Abdomen Qualification Corridors

The December 14, 2006 final rule (572.197) specified an abdomen qualification procedure in which, for a specified impact velocity, performance corridors were set for: Peak upper abdominal rib deflection, peak lower abdominal rib deflection, peak lower spine lateral acceleration, and peak impactor acceleration.

Requested Change

The Alliance, FTSS and Denton/SAE DTES petitioned for changes to these qualification corridors, based on their analyses of larger data sets as described below. Table 15 presents the petitioned corridors.

The Alliance recommended a corridor that is ±2 s.d. from the mean of pooled data from FTSS and NHTSA and excluded data from tests conducted at speeds greater than 4.4 m/s in their January 2007 petition, but used an impact velocity range of 4.4 ±0.1 m/s in

their December 2007 petition. FTSS pooled data from FTSS, NHTSA and GM, based on 4.4 ±0.1 m/s impact speed. It created corridors using the NHTSA procedure, except the T12 corridor was created using ±2 s.d. instead of 10%. Denton/SAE DTES created corridors using ±3 s.d. from the mean of 4.4 ±0.1 m/s impact data pooled from FTSS, NHTSA, MGA and TRC.

TABLE 15—COMPARISON OF PETITIONED ABDOMEN QUALIFICATION CORRIDORS

Abdomen qualification test	December 14, 2006 final rule corridor	Petitioned recommendations			
		Alliance—January 2007	Alliance—December 2007	FTSS	Denton/SAE DTES
Impact Velocity (m/s)	4.3–4.5	4.2–4.4	Same as FR	Same as FR	Same as FR
Peak Upper Abdominal Rib Deflection (mm)	39–47	37–50	37–49	Same as FR	36–51
Peak Lower Abdominal Rib Deflection (mm)	37–46	35–49	35–49	Same as FR	33–53
Peak Lower Spine Lateral Accel. (g)	11–14	9–15	9–14	9–14	9–15
Peak Impactor Acceleration (g)	12–16	Same as FR	Same as FR	Same as FR	11–16

Agency Response

As discussed previously, NHTSA is reducing the impact velocity to 4.3 ±0.1 m/s. Accordingly, the performance corridors were formed using only those tests with input energies corresponding to impact velocities of 4.3 ±0.1 m/s. The report ''Analysis and Development of SID–IIsD Qualification Specifications in Response to Petitions for Reconsideration'' describes the statistics and rationale used for the placement of corridor bounds, and provides figures showing the responses for each qualification measurement. In this qualification test, both rib deflection criteria were expanded and/or shifted downward slightly from the final rule corridors. The statistical corridors for these measurements were formed using the NHTSA method and the 4.3 ±0.1 m/s data set. However, due to low deflection responses at impact velocities from 4.2—4.3 m/s, the lower bound of the upper rib deflection statistical corridor was reduced 1 mm, and the lower bound of the lower rib deflection statistical corridor was reduced 2 mm. These corridors are narrower than those suggested by the Alliance and Denton/SAE DTES, but we believe they contain the data sufficiently well. The peak lower spine acceleration corridor was set by placing the bounds at ±2 s.d. from the mean, rather than ±10% from the mean as specified by the NHTSA method for corridor formation. Like in the thorax with arm test, this is because the low magnitude of this measurement results in a narrow corridor when its bounds are placed at ±10% of the mean, so it is more appropriate to set the corridor bounds at ±2 s.d. from the mean. The final corridors are shown in Table 16.

TABLE 16—ABDOMEN QUALIFICATION CORRIDOR

Abdomen qualification measurement	December 14, 2006 corridor	Statistical corridor	Today's final rule corridor
Impact Velocity (m/s)	4.3–4.5		4.2–4.4
Peak Upper Abdominal Rib Deflection (mm)	39–47	37–47	36–47
Peak Lower Abdominal Rib Deflection (mm)	37–46	35–44	33–44
Peak Lower Spine Lateral Accel. (g)	11–14	10–13	9–14
Peak Impactor Acceleration (g)	12–16	12–16	12–16

e. Pelvis Acetabulum Qualification Corridors

The December 14, 2006 final rule (572.198) specified a pelvis acetabulum qualification procedure where for a given impact velocity, performance corridors were set for: peak impactor acceleration, peak lateral pelvis acceleration, and peak acetabulum force.

Requested Change

The Alliance, FTSS and Denton/SAE DTES requested changes to the pelvis acetabulum qualification corridors with the condition that the peak lateral pelvis acceleration be taken 5 ms or more after the impactor contacts the dummy. The Alliance separately analyzed data from tests with 2 mm and 3 mm pre-crushed plugs. It recommended a corridor width of ±2 s.d., regardless of which pre-crush amount is used. FTSS pooled data from FTSS, Ford and NHTSA with 2 mm and 3 mm pre-crushed plugs combined. It created corridors using the NHTSA procedure described in section XI of this preamble. Denton/SAE DTES also analyzed combined data from 2 mm and 3 mm pre-crushed plugs. It created corridors using ±3 s.d. from the mean of pooled data from FTSS, Ford and NHTSA. The recommended qualification corridors are set forth below in Table 17.

TABLE 17—COMPARISON OF PETITIONED ACETABULUM QUALIFICATION CORRIDORS

Pelvis-Acetabulum qualification test	December 14, 2006 final rule corridor	Petitioned recommendations			
		Alliance—January 2007	Alliance—December 2007	FTSS	Denton/SAE DTES
Impact Velocity (m/s)	6.6–6.8	Same as FR	Same as FR	Same as FR	Same as FR.

TABLE 17—COMPARISON OF PETITIONED ACETABULUM QUALIFICATION CORRIDORS—Continued

Pelvis-Acetabulum qualification test	December 14, 2006 final rule corridor	Petitioned recommendations			
		Alliance—January 2007	Alliance—December 2007	FTSS	Denton/SAE DTES
3-mm Pre-Crushed Plugs					
Peak Impactor Acceleration (g)	38–47	Same as FR.			
Peak Lateral Pelvis Accel. (g)	41–50.				
Peak Lateral Pelvis Acceleration after 5 ms (g)		30–45.			
Peak Acetabulum Force (kN)	3.8–4.6	3.7–4.4.			
2-mm Pre-Crushed Plugs					
Peak Impactor Acceleration (g)		40–47.			
Peak Lateral Pelvis Accel. (g)					
Peak Lateral Pelvis Acceleration after 5 ms (g)		31–45.			
Peak Acetabulum Force (kN)		3.8–4.3.			
2- and 3-mm Pre-Crushed Plugs					
Peak Impactor Acceleration (g)				Same as FR	38–49.
Peak Lateral Pelvis Accel. (g)					REMOVE.
Peak Lateral Pelvis Acceleration after 5 ms (g)			30–45*	34–42	IF KEEP, 28–48.
Peak Acetabulum Force (kN)			3.6–4.4*	3.6–4.4	3.64–4.42.

* It is unknown how the plugs were crushed for the data submitted by the Alliance in December 2007. Therefore, we have included their petitioned corridors in the ''2 and 3-mm pre-crushed plugs'' category.

Agency Response

NHTSA pooled all the relevant data for 3 mm pre-crushed plugs in the formulation of new corridors for the pelvis acetabulum qualification test. While the petitioners provided numerous pelvis-acetabulum qualification test results to support their recommendations for corridor adjustment, all tests conducted by FTSS and Ford were performed using 2 mm pre-crushed plugs. Because the plug response characteristics cannot be determined from pre-crushing 2 mm, the results derived from these plugs cannot be considered valid for the agency's corridor analysis. Likewise, the petitioners' recommendations for performance corridors based on analysis of 2 mm pre-crushed plugs cannot be considered.

Performance corridors for the pelvis-acetabulum were formed following the methods described in section XI of this preamble. The report, ''Analysis and Development of SID–IIsD Qualification Specifications in Response to Petitions for Reconsideration,'' describes the statistics and rationale used for the placement of corridor bounds, and provides figures showing the responses for each qualification measurement. The corridors for peak lateral pelvis acceleration (now after 6 ms) and peak acetabulum force were revised to reflect the statistics of the expanded data set, which includes tests performed by NHTSA and FTSS (on dummies purchased by NHTSA). These corridors sufficiently contained the variation in the data, and are adopted in this final rule. The final corridors are shown in Table 18.

TABLE 18—PELVIS-ACETABULUM QUALIFICATION CORRIDORS

Pelvis-Acetabulum qualification measurement	December 14, 2006 corridor	Statistical corridor	Today's final rule corridor
Peak Impactor Acceleration (g)	38–47	39–46	38–47
Peak Lateral Pelvis Accel. (g) (over entire test period)	41–50	N/A	N/A
Peak Lateral Pelvis Acceleration after 6 ms (g)	N/A	34–42	34–42
Peak Acetabulum Force (kN)	3.8–4.6	3.60–4.30	3.60–4.30

f. Pelvis Iliac Qualification Corridors

The December 14, 2006 final rule (572.199) specified an iliac qualification procedure where three performance corridors were set for a specified impact velocity: Peak impactor acceleration, peak lateral pelvis acceleration, and peak iliac wing force.

Requested Change

The Alliance, FTSS and Denton/SAE DTES petitioned for changes to these qualification corridors. The Alliance pooled data from FTSS, Ford and GM in the evaluation of M3 wings with standoffs tested to the OSRP procedure. It also used M3 wings with standoffs data from FTSS using the final rule iliac qualification procedure. Each set of recommended corridors were created using ±2 s.d. from the mean. FTSS provided data for M3 wings with standoffs, but did not propose corridors. It did propose corridors for M2, in case M3 was not adopted. It pooled data from FTSS and NHTSA and used the NHTSA statistical procedure for its M2 recommendation. Denton/SAE DTES used data from FTSS to establish corridors for M3 with standoffs. It also pooled data from FTSS and NHTSA to establish M2 corridors. Each set of recommended corridors were created using ±3 s.d. from the mean. The data are summarized in Table 19.

TABLE 19—COMPARISON OF PETITIONED PELVIS-ILIAC QUALIFICATION CORRIDORS

Pelvis-iliac qualification test	December 14, 2006 final rule corridor	Petitioned recommendations		
		Alliance (±2 s.d.)	FTSS (NHTSA procedure)	Denton/ SAE DTES (±3 s.d.)
Impact Velocity (m/s)	4.2–4.4	Same as FR	Same as FR	Same as FR
Material #2 w/NHTSA plate—Final Rule procedure				
Peak Impactor Acceleration (g)	34–40		33–40	32–41
Peak Lateral Pelvis Accel. (g)	27–33		Same as FR	22–37
Peak Iliac Wing Force (kN)	3.7–4.5		3.6–4.4	3.2–4.8
Material #3 w/standoffs—Final Rule procedure				
Peak Impactor Acceleration (g)		37–44		35–46
Peak Lateral Pelvis Accel. (g)		29–41		26–44
Peak Iliac Wing Force (kN)		3.7–5.1		3.3–5.5
Material #3 with standoffs—OSRP procedure				
Peak Impactor Acceleration (g)		35–42		
Peak Lateral Pelvis Accel. (g)		28–37		
Peak Iliac Wing Force (kN)		3.6–4.8		

Agency Response

Although the Alliance, IIHS, FTSS, and Denton/SAE DTES petitioned for the use of the iliac wing design of M3 with standoffs and provided an extensive amount of iliac qualification data for this wing design, no data was provided for M3 wings with standoffs and a backer plate. In today's final rule, NHTSA has specified use of the backer plate along with the M3 with standoffs design because quasi-static tests showed that it is still possible for the M3 with standoffs iliac wing to off-load the iliac load cell when used without a backer plate. However, because the plate has little effect on iliac response in qualification tests (see Table 2 in section V.b of this preamble), NHTSA has decided that the petitioners' ''M3 with standoffs'' data using the NHTSA final rule test procedure are valid and should be considered for corridor formation.

In response to the petitions for reconsideration, NHTSA has developed the iliac performance criteria based on an analysis of 83 ''M3 with standoffs'' tests performed by FTSS, multiple series of agency pelvis-iliac qualification tests using a total of four pelvis skins and six (three right, three left) M3 iliac wings with standoffs and a backer plate, and agency tests of two pelvis skin/iliac wing combinations with no backer plate. In total, 123 impacts were included from agency testing, 107 of which were with and 16 were without a backer plate.[45]

Performance corridors for the pelvis-iliac were formed following the methods described above using the mean, SD, and CV of the data set and setting bounds at a certain distance from the mean value, depending on the CV. The report ''Analysis and Development of SID–IIsD Qualification Specifications in Response to Petitions for Reconsideration'' describes the statistics and rationale used for the placement of corridor bounds, and provides figures showing the responses for each qualification measurement. In general, the corridors were shifted upward from those established in the December 2006 final rule to account for the higher responses of M3 over M2. Final placement of the corridors was primarily based on the responses of a subset of the NHTSA tests (n = 53) that were conducted with a minimum two-hour recovery time, as specified in this final rule. The peak lateral pelvis acceleration corridor was expanded somewhat from the statistical corridor (set at ±10% from the mean) to account for the variation in response seen for this measurement. The peak impactor acceleration and peak iliac wing force corridors were revised based on the statistics of the two-hour recovery time (n = 53) data set. The final corridors are shown in Table 20.

TABLE 20—PELVIS-ILIAC QUALIFICATION CORRIDORS

Pelvis-iliac qualification measurement	December 14, 2006 corridor	Statistical corridor	Today's final rule corridor
Peak Impactor Acceleration (g)	34–40	36–45	36–45
Peak Lateral Pelvis Accel. (g)	27–33	29–36	28–39
Peak Iliac Wing Force (kN)	3.7–4.5	4.10–5.10	4.10–5.10

XI. Drawing Package and PADI

The petitions for reconsideration suggested a number of changes to the drawing package that was incorporated by reference into the part 572 regulatory text set forth in the December 14, 2006 final rule. These requests are discussed below, along with agency responses. Because the drawings in the drawing

[45] In evaluating these test results, it was noticed that the first impact in a series of impacts often had a lower response than subsequent impacts. It was determined that this occurrence will not be problematic in compliance environments. Our analysis of this observation is presented in the report ''Analysis and Development of SID–IIsD Qualification Specifications in Response to Petitions for Reconsideration.''

package and the PADI are being changed as discussed below, this final rule updates the references to the drawing package, parts list, and PADI incorporated by reference into part 572. The updated drawing package, parts list, and PADI referenced by today's final rule are dated July 1, 2008.

Data submitted by FTSS and Denton relating to the drawing package has been compiled by NHTSA and submitted to the docket in a memorandum entitled, ''Drawing Package Petition Data.'' This section refers to tables set forth in this memorandum. Other memorandums have been submitted to the docket that document communications between NHTSA and FTSS and Denton regarding the SID–IIsD drawing package.

As a result of the changes made by today's final rule, the total weight of the dummy is adjusted to 97.26 ±2.40 lb. Changes to weights and masses discussed in the following sections are reflected in Drawing 180–0000 Sheet 4 of 5 and in Table 20 of the PADI. For a compilation of center of gravity (CG) and weight measurements used to respond to these petitions for reconsideration, *see* Tables 1–4 in the docket memorandum, ''Drawing Package Petition Data,'' *id.*

a. Issues Raised by Both FTSS and Denton

1. Referenced Drawings

FTSS stated that the following drawings refer to Hybrid III drawings and believed that the contents in the title blocks, such as material and finish, should be removed: 180–1003, 180–1004, 180–1005, 180–2009, 180–3005, 180–5160–1/–2, 180–5141–1/–2, 180–5381, 180–5303, 180–5301, 180–5382, 180–5540, 180–5504, 180–5503, 180–5508, 180–5703, 180–5704, 180–5709, 180–5906–1/–2, 180–5902, 180–5905, 180–5904, and 180–5706. Denton also listed drawing 180–5903. Denton stated that all of these prints simply provide a reference back to another print that is the same. The petitioner believed that the drawings include a material callout which should be removed.

Agency Response: We agree with the petitioners and have removed the material callouts on these drawings. Also, the note ''scale'' has been removed, because it does not apply to a blank reference drawing. However, the finish specification is part of the general dimension and tolerance block and will be maintained. While reviewing the drawing package, we found that drawing 180–5708, which is ''same as part number A–1887,'' also has a defined scale that has been removed.

2. Drawing 180–3113, Side, Plate—Spine Box

FTSS stated that the dimension .788 (grid reference C4) should read (.788), a reference dimension. Denton suggested deleting this .788 dimension in the left view, as it is double dimensioned.

Agency Response: These comments are correct. We have added parentheses around the .788 dimension in the left view to make it a reference dimension.

3. Drawing 180–3361, Lower Bib—Ribs

FTSS stated that 12xR.05 (B1) should read 8xR.05. Denton stated that the 12X radius callout should be 8X.

Agency Response: These comments are correct. In drawing 180–3361, we have changed 12xR.05 in grid B1 to 8xR.05.

4. Drawing 180–3343, Neck Mount Block, Machined

FTSS stated that dimension 2.4 (B5) is not clear, and should read 2.40 (CTR OF R.25). Denton stated that the 2.40 dimension is unclear and should be replaced with a dimension to the corner.

Agency Response: We agree that the dimension is not clear. However, a dimension to the corner would not describe the part as well as a dimension to the center of the radius. The 2.4 inch (in) dimension needs to be labeled as the center of the 0.25 in radius. Accordingly, we have added ''(CTR OF R.25)'' to the dimension, as well as a center of radius symbol, for clarification.

5. Drawing 180–3501, Sternum

FTSS stated that R.500 (B2) should read 4xR.500. Denton also stated that the R.500 should have 4X added in front of it.

Agency Response: We agree that this radius needs to be labeled 4x to describe all four edges. We have added ''4x'' before the R.500 dimension in grid B2 of drawing 180–3501.

6. Drawing 6000075, Bearing Spherical .500 X 1.000

FTSS believed that dimension Ø.156+.002/−.000 should read 2x Ø.156+.002/−.000 THRU. Denton stated that the .156 dia should have 2X added to it since it does not go through.

Agency Response: There are two holes, so we have added ''2x'' before the 0.156 diameter dimension in grid C3, drawing 6000075. However, the holes do not go all the way through, so ''THRU'' was not added.

7. Drawing 180–3363, Lower Ribs—Bending Upper Torso

FTSS stated that the tolerance for the dimensions is too tight for manufacturing; Hybrid III dummies use a tolerance of ±0.30 for the general dimension and ±0.12 for the bend radius. FTSS recommended following Hybrid III dummy rib dimension tolerance practice, and change the 4xR2.75 to 4xR2.75±0.12, change 9.45±0.20 to 9.45±0.30, and change 7.48±0.20 to 7.48±0.30.[46] Denton also believed that the tolerances on the rib bending are unrealistically tight. Denton believed appropriate tolerances should match what is on the H–III50M ribs such as 78051–31: The 2.75 radius dimension should have a tolerance of ±.12 to match the radius tolerance on 78051–31. The size dimensions 7.48, 4.03, 3.45, and 9.95 should have tolerances of ±.03 to match 78051–31. Denton believed that the dimensions 4.73 and 7.20 should be made reference because they are almost impossible to measure.

Agency Response: We have changed the tolerance of ±0.02 for the 7.48 and 9.95 dimensions to ±0.03 to match that of the Hybrid III dummy ribs, and have added the tolerance of ±0.12 to the bend radius dimension, as requested. In addition, we have added a tolerance of ±0.03 to the 4.03 and 3.45 dimensions. The dimensions 4.73 and 7.20 are made reference.

8. Drawing 180–3366, Shoulder Rib—Bending Upper Torso

For the same reason as stated above for drawing 180–3363, FTSS recommended that NHTSA follow Hybrid III dummy rib dimension practice and change 4xR1.93 to 4xR1.93±0.12, change 5.88±.20 to 5.88±.30 and change 9.98±.20 to 9.98±.30. Denton believed that the tolerances on the rib bending are unrealistically tight and that appropriate tolerances would match what is on the HIII50M ribs, *e.g.,* 78051–31. Denton recommended that the 1.93 radius dimension should have a tolerance of ±.12 to match the radius tolerance on 78051–31, and that the size dimensions 5.88, 3.23, 2.65, and 9.98 should have tolerances of ±.03 to match 78051–31. The petitioner suggested that dimensions 3.95 and 8.05 should be made reference because they are almost impossible to measure.

Agency Response: The same errors are present in FTSS's recommended changes as noted in #7 above. Otherwise, the petitioners are correct. We have changed the tolerance of ±0.02

[46] There are several typos in FTSS's comment. The tolerance for general dimensions on the Hybrid III dummies is ±0.03, not ±0.30. The petitioner asks to change ''9.45±0.20'' to ''9.45±0.30''. The dimension and tolerances are in error. The petition should ask to change ''9.95±0.02'' to ''9.95±0.03.''

on the 9.98 and 5.88 dimensions to ±0.03 to match that of the Hybrid III dummy ribs and have added the tolerance of ±0.12 to the bend radius dimension. In addition, a tolerance of ±0.03 is added to the 3.23 and 2.65 dimensions, and the dimensions 3.95 and 8.05 are made reference.

9. Drawing 180–9060, Spacer

FTSS and Denton stated that dimension 0.194 +0.001/-0.000 (C2) should read 0.194 +0.010/-0.000.

Agency Response: NHTSA agrees and has changed the tolerance as petitioned.

10. Drawing 180–5900–1/–2, Foot Assembly Molded 45°, Left and Right

FTSS stated that the weight specification in note 1 should read 1.78±.10 lbs to be consistent with weight table in drawing 180–0000 sheet 4 and the HIII5F specification.[47] Denton believed that the weight tolerance should be ±.10 lb, similar to the standard HIII5F foot 880105–650/651.

Agency Response: The HIII5F drawing and the SID–IIs foot weight specification on sheet 4 of 180–0000 specify 1.75 ±0.10 lbs. Drawings 180–5900–1 and –2 specify a weight of 1.75 +/- 0.08 lbs. We agree with the petitioners and have changed the weight specification in note 1 on 180–5900–1, –2 to read 1.75 ±0.10 lbs to be consistent with weight table in drawing 180–0000 sheet 4, and the HIII5F. In addition, Note 4 is revised such that the phrase, ''* * * weight tolerance was 0.10 * * *'' is removed.

b. Issues Raised By FTSS

1. Drawing 180–0000, SID–IIsD Complete Assembly, Sheet 4 of 5

A. *Arm CGy:* FTSS proposed to change the tolerance from ±0.15 to ±0.30 inch (in). In its addendum to the petition for reconsideration, FTSS proposed to change the arm CGy from 0.50±0.15 to 0.49±0.20 in.

Agency Response: The final rule CG location of 0.50 in should be retained because it is very close to the FTSS recommendation and it sufficiently represents the average of the data. However, increasing the tolerance to 0.20 in is acceptable because measurement of the arm CG is susceptible to error due to the pivot point of the arm. Thus, the arm CGy is changed from 0.50 ±0.15 in to 0.50 ±0.20 in.

B. *Arm CGz:* FTSS suggested changing the dimension from 3.40 to 3.56 in. In its petition addendum, item #5b, FTSS proposed to change this value from 3.40±0.30 to −3.56 ± 0.20 in.[48]

Agency Response: We are changing the arm CGz from 3.40±0.30 in to 3.55 ±0.30 in. A dimension of 3.55 ±0.30 in retains the original tolerance level while still including the FTSS recommended range. 3.55 in is the average of all arm CGz values measured by FTSS and NHTSA, and includes all measurements from NHTSA-owned dummies (*see* Table 1 of the memorandum entitled, ''Drawing Package Petition Data,'' in the docket for today's final rule.)

C. *Upper Torso Weight:* FTSS suggested changing this dimension from 24.65 to 24.26 lb.

Agency Response: We have changed the upper torso assembly without chest jacket weight from 24.65 ±0.40 lb to 24.50 ±0.45 lb. An average was taken of all available data (see Table 2, ''Drawing Package Petition Data,'' *id.*) with the lower abdominal potentiometer (hereafter referred to as the (''5th pot'') excluded.[49] A tolerance of 0.45 lb around a mean of 24.50 lb includes all of the available data.

D. *Upper Torso CGy:* FTSS suggested changing the specification from 0.63±0.15 to −0.70±0.20 in.

Agency Response: We agree to change the upper torso CGy to 0.70 ±0.20 in. An average was taken of the data provided by FTSS (*see* Table 2 in ''Drawing Package Petition Data,'' *id.*) with the 5th pot excluded. A specification of 0.70 ±0.20 in includes all the relevant data.

E. *Upper Torso CGz:* FTSS suggested changing the specification from 4.30 to 4.38 in.

Agency Response: We agree to the suggestion to change the nominal value of the upper torso CGz to 4.38 in. A CGz of 4.38 in is slightly higher than that specified in the final rule, which is understandable since FTSS did not include the 5th pot in their measurements of the upper torso. As the location of the 5th pot is moved to the lower torso, a higher upper torso CGz is expected. An average was taken of the data provided by FTSS (*see* Table 2 in ''Drawing Package Petition Data,'' *id.*) with the 5th pot excluded. A specification of 4.38 ±0.20 in includes all of the relevant data.

F. *Lower Torso Weight:* FTSS suggested changing the specification from 27.50 to 27.43 lb.

Agency Response: We are denying the request to change the lower torso weight to 27.43 lb, but we are changing the lower torso weight to 27.60 ±0.40 lb in accordance with FTSS and NHTSA adjusted data. The petitioner's suggested specification for lower torso weight included the 5th deflection potentiometer, but did not include the iliac wing backer plates.[50] In the revised drawing package, the lower torso will include the 5th pot and the iliac wing backer plates. Thus, the FTSS measurements were adjusted by adding the weight of the backer plates, and the NHTSA measurements made per the final rule (with the 5th pot in the upper torso) were adjusted by adding the weight of the potentiometer. Then, the mean of all NHTSA and FTSS measured weights was calculated to be 27.61 lb (Table 3, ''Drawing Package Petition Data,'' *id.*). The lower torso weight specification is centered at this mean.

G. *Lower Torso CGx:* FTSS suggested changing the tolerance from 0.10 to 0.15 in.

Agency Response: We agree to change the lower torso CGx tolerance to ±0.15 in as this tolerance is reasonable and acceptable.

H. *Jacket Weight:* FTSS suggested changing the specification from 1.40±0.10 to 1.27±0.11 lb (578±50 grams).

Agency Response: FTSS suggested a large change in weight because the jacket is being manufactured by a new supplier. We agree to changing the weight, but we believe that a new weight specification should include as many of the old jackets as possible. NHTSA is thus specifying a jacket weight of 1.30 ±0.15 lb. This tolerance would include all but one of the agency measurements and the whole range suggested by FTSS (see Table 4 in ''Drawing Package Petition Data,'' *id.*).

I. *Lower Torso CGy:* FTSS suggested a specification of 0.08±0.20 in.

Agency Response: This request is denied. No specification for lower torso CGy was given in the final rule; this is because the lower torso is symmetrical according to the final rule drawing package. The CG offset amount suggested by FTSS is likely due to the asymmetry of the 5th potentiometer, which FTSS included in its lower torso measurements. Although this final rule includes the 5th potentiometer in the lower torso for weight and CG measurements, FTSS's suggested CG is so close to zero that it is not deemed

[47] It is believed that the FTSS petitioned weight specification had a typographic error and was meant to read 1.75± 0.10 lbs since that is what was specified on drawing 180–0000 sheet 4 and on the HIII5F drawings 880105–650/651.

[48] FTSS drawings of the SID–IIsD show CG origins and axes with a defined positive direction, thus, CG values that fall on the negative side of the axis are labeled as negative CG's. In contrast, NHTSA drawings do not indicate positive/negative direction of the CG axes, so all CG's are positive in sign.

[49] The lower abdominal rib potentiometer (or 5th pot) has been moved from the upper torso to the lower torso for purposes of measuring the weight and cg of these dummy segments. This change is discussed later in this preamble.

[50] See ex parte memorandum in the docket.

necessary to specify a CG requirement in the y-direction.

J. *Lower Torso CGz:* FTSS suggested a specification of 1.01±0.20 in.

Agency Response: We agree with this suggestion. The proposed CGz location is very close to the final rule specification, and FTSS based this recommendation on measurements of 33 dummies with the 5th potentiometer included. Although General Dynamics measured five NHTSA lower torsos without the 5th pot and found an average CGz location of 0.88 in, the method General Dynamics used to hold the lower torso while measuring the CG resulted in the pelvis flesh compressing and inaccurate data may have been obtained (*see* note following Table 3 in ''Drawing Package Petition Data,'' *id.*). The data from General Dynamics was thus disregarded in the analysis. Although FTSS did not include the iliac wing backer plates in their lower torso measurements, this part should not affect the CGz of the assembly because it is centered on the CG origin.

2. Drawing 180–1000, 6 Axis Head Assembly

FTSS requested changing the head skin thickness dimension 0.480±.030 to 0.510±.030 to ensure the head performance.

Agency Response: We agree to change the head skin thickness to 0.510 in, as petitioned, but we have increased the tolerance so that the thickness specification will be changed as follows: From 0.480 ±0.030 in (0.450–0.510 in) to 0.51 ±0.05 in (0.46–0.56 in).

Prior to the final rule, FTSS provided thickness measurements for two head skins. These measurements, as well as VRTC head skin measurements from new dummies, were used to evaluate the FTSS suggestion, and are shown in Tables 5 through 7 of the memorandum ''Drawing Package Petition Data,'' *id.*. VRTC noted that some of the FTSS measurements would fail the thickness dimension suggested by FTSS. When asked by VRTC why it had recommended such a large shift in head skin thickness, FTSS replied:

> The original SID–IIs head skin mold was not symmetrical left to right and produced head skins that required FTSS to manually trim the head skin thickness to meet the Head Drop corridors on both sides of the head. The original head skin mold was a legacy problem and was a carry over from the Hybrid III 5th Female dummy. This caused problems in manufacturing quality head skins. A new head skin mold was manufactured about a year ago to ensure left side to right side symmetry of the head skins. The new mold provides symmetrical head skins, but the skin thickness needed to be increased to 0.510 inches to meet the Head Drop test corridors.

Based on the head skin thicknesses provided by FTSS and obtained by the agency, this final rule specifies a head skin thickness of 0.51 ± 0.05 in. This specification is met for most dummies in critical areas (*i.e.,* areas that receive impact in vehicle and qualification tests). Additionally, this range includes nearly all of the thickness values allowed by the final rule, resulting in minimal impact on the ability of older skins or skins from different manufacturers to pass the thickness specification. The corresponding head drop test results for agency dummies are shown in Table 8 in the memorandum, ''Drawing Package Petition Data,'' *id.* The results of these tests indicate that the recommended head skin thickness does not compromise the dummy's ability to pass the head drop test. However, it is emphasized that while the head skin thickness is specified to facilitate consistency between dummies, it is the manufacturer's responsibility to meet all head specifications, including skin thickness, weight, cg, and qualification specifications.

3. Drawing 180–4320–1/2, Iliac Wing

FTSS stated that the right view of 180–4320–1 and the left view of 180–4320–2 needs to be updated to reflect the actual part.

Agency Response: This aspect of the FTSS petition is moot, as it refers to drawings that are replaced with drawings of the new M3 with standoffs iliac wing.[51] This final rule replaces drawings 180–4320–1/2 with drawings 180–4322–1/2 of the new iliac wing design. We are also replacing drawing 180–4321, Iliac Wing Support Plate (the steel plate that is molded within the iliac wing), with drawing 180–4323, which has the ''standoffs.'' Corresponding changes have also been made to Table 9 and multiple figures in the PADI.

4. Drawing 180–3000, Upper Torso Assembly

The petitioner believes that the orientation of Item 34 is not correct and that it needs to be rotated 180 degrees.

Agency Response: The orientation of Item 34 is correct as is and will not be changed. However, the view in sheet 1 shows the rear of the dummy thorax while sheet 2 shows the front view, which may have caused confusion. Thus, we are adding a note to sheet 2 that indicates the view shown in the drawing.

5. Drawing 180–3623, Lower Rib Pad—Upper Torso

FTSS believed that fastening the lower rib pad to the spine box can result in conditions of over-tightening and/or under-tightening the pad fasteners during the installation process, due to the elasticity of the part. Over-tightening the pad can cause interference with another fastener in the spine box. FTSS redesigned the lower rib pad to include an aluminum insert at the site of attachment to the spine box, and requested the following changes:

Obsolete drawing 180–3623, Lower Rib Pad—Upper Torso;

Add drawing 180–3628, Lower Rib Pad Assembly, Upper Torso;

Add drawing 180–3627, Lower Rib Pad Insert.

An addendum to the petition (Docket No. NHTSA–2006–25442–0040.1) requested a change to the rib pad inserts. Originally, the inserts were rectangular, but FTSS found that this design could possibly tear the rib pad during handling of the parts. Thus, FTSS suggested that the inserts should be of a circular design.

Agency Response: The agency is granting the request to include circular aluminum inserts within the rib pad, and has incorporated the suggested drawings into the SID–IIsD drawing package with the following part descriptions: Drawing 180–3628, Rib Pad Assembly—Upper Torso; Drawing 180–3627, Rib Pad Insert—Upper Torso. The circular inserts are not expected to have any effect on the performance of the part. VRTC purchased and evaluated two rib pads with the original rectangular inserts, and found that the proposed rib pads are acceptable and will cause no foreseeable detriment. Because the inserts have only been added to provide a non-deformable material within the rib pad for attachment to the spine box, there is no foreseeable problem with this design change. Additionally, VRTC purchased and evaluated a rib pad with the circular inserts, and found that the inserts have no effect on proper installation of the rib pad. Thus, it was concluded that this was an acceptable design change. Table 7 and Figure 58 of the PADI have also been amended to reflect this change.

[51] The agency had contacted FTSS to request clarification of this aspect of the petition, and FTSS responded by providing drawings for these parts (see ex parte communication) that showed an additional radius in the right view of 180–4320–1 and the left view of 180–4320–2. However, it appeared that the parts did not have this additional radius and that the original iliac wing drawings reflect the parts as they were.

6. Drawing 180–3450, Jacket

In its addendum, FTSS suggested a material thickness specification of 0.286 ±0.030 in (7.26 ±0.76 mm). FTSS requested this change in jacket thickness to reflect a change in jacket characteristics due to a change in the jacket supplier.

Agency Response: We are amenable to including FTSS's suggested thickness range for currently-manufactured jackets while also including specifications that would accommodate jackets made to the December 14, 2006 final rule specifications. The final rule specified a neoprene thickness of ¼ in ±3/64 in (a range of 0.203–0.297 in), laminated on both sides with lightweight circular jersey-net nylon fabric of thickness .020 ±.005 in. FTSS requested a thickness ranging from 0.256–0.316 in. Based on comparisons of the final rule and FTSS-recommended thickness ranges, the agency is adopting a thickness specification of 0.26 ±0.05 in, which would include nearly all of both ranges, while only slightly increasing the tolerance from that specified in the final rule. This specification is for the overall thickness of the jacket (Neoprene and laminated fabric). However, the fabric thickness specification will remain on the drawing to ensure that the fabric and Neoprene thicknesses (and thus, dummy thorax performance) will be consistent among different manufacturers. Accordingly, note 2 in drawing 180–3450 is changed to read: ''Material: 100% neoprene material, laminated on both sides with lightweight circular jersey-net nylon fabric, 0.20 ± .005; overall thickness 0.26 ± 0.05.''

7. Drawings 180–6011–1/2, Arm Flesh, Molded Left/Right

FTSS asked for changes to the drawing package specifications regarding the test dummy's overall arm length, arm depth, arm width, and also with regard to additional NHTSA dimensions specified in the drawings. The petitioner requested the changes to reflect what FTSS believed are improvements made to the SID–IIs left arm and the right arm molds to eliminate left side to right side variations between the two previous arm molds and to improve the overall quality of the dummy. The petitioner believed that the changes bring consistency to the dummy with respect to the Thorax Impact With Arm test when impacting the dummy on either the left side or right side.

FTSS submitted arm dimension data to support its petition for reconsideration.[52] The data were measured and collected on nine SID–IIs arms manufactured by FTSS. All arms are from FTSS's new SID–IIs arm molds, varying in production dates ranging from October 2006 through March 2007.

FTSS did not request a change to the overall arm length, but petitioned for the following corrections or clarifications to drawings 180–6011–1 and 180–6011–2 based on the data provided: (A) Overall arm depth—change the arm depth dimensional tolerance from +0/-0.10 in to ±0.10 in; (B) overall arm width—correct tolerance to be +0/-0.10 in; and (C) drawing clarity—FTSS believed that several dimensions that NHTSA had on these drawings are not adequately defined to produce consistent measured values.

Agency Response

A. *Overall arm depth:* The agency believes that a tolerance of ±0.10 in is too large, since the arm depth must be fairly well controlled to ensure good responses in the crash environment. Arm depths measured by FTSS and VRTC (see Table 9 of the memorandum, ''Drawing Package Petition Data'' for VRTC data) were compared to obtain a specification that would include as many dummies as possible. We determined that a dimension of 2.30 ± 0.06 in (2.24–2.36 inches) includes all NHTSA and FTSS dummies and increases the overall tolerance only by 0.02 in from the final rule. Accordingly, we are changing the specification for arm depth to 2.30 ±0.06 in.

B. *Overall arm width:* FTSS observed that the NHTSA drawing specifies the arm width dimension to be 3.47 +0/−0.01 in. It stated that the tolerance of +0/−0.01 in is not attainable for this dimension and was specified in error, and that when the SID–IIs Build Level D drawings were under development for NHTSA, they specified an arm width tolerance of +0/−0.10 in, which is an achievable tolerance for vinyl and foam dimensions. In response, we note that drawing 180–6011–1 incorrectly specifies the arm width dimension tolerance as +0/−0.01 in, as noted by the petitioner, but that drawing 180–6011–2 correctly specifies a tolerance of +0/−0.10 in. Therefore, we agree with the petitioner regarding drawing 180–6011–1 and are correcting the tolerance on drawing 180–6011–1 to be +0/−0.10 in.

C. *Drawing clarity:*

FTSS stated that certain dimensional measurements specified in Revision B of drawings 180–6011–1 and 180–6011–2 ''are not adequately defined to produce consistent measured values.''

(i) 1.75 ±0.05 inch dimension. FTSS stated that ''it is unclear where this dimension is to be measured from,'' and further suggested that ''this dimension should be a reference dimension given that the material being measured is made of vinyl and foam, which can vary due to aging.''[53]

(ii) 2.90 inch reference dimension, 2.18 inch reference dimension, and 1.00±0.05 inch dimension. FTSS stated that ''it is unclear where [these dimensions are] to be measured from,'' and that the 1.00 dimension ''should be a reference dimension since the bottom surface is vinyl. FTSS notes that a tolerance of ±0.05 in for vinyl and foam material is not achievable.'' The petitioner submitted a figure that FTSS believed should be made part of the drawing package, depicting the arm in side view.

Agency Response: The four dimensions addressed by the petitioner were not shown well on the December 2006 final rule arm drawings, and are confusing. They were meant to locate points to define the curvature of the arm. NHTSA has removed these dimensions from the end view and has created two sections (one at 0.19 in from the elbow end, and one at 6.5 in from the elbow end, just below the shoulder portion) with dimensions shown clearly. A note has been added to clarify that the dimensions locate points to define the curvature of the arm. In addition, we have added to the section views a dimension indicating the height of the section so that the taper of the outside surface of the arm is somewhat defined.

(iii) Tolerance values. FTSS also commented generally on tolerance values established for drawings. The petitioner stated:

> On drawings 180–6011–1 and 180–6011–2, note #4 states: Tolerance ±0.05 apply to all dimensions unless otherwise specified. FTSS does not believe this tolerance is achievable for vinyl and foam parts. We base this statement on our many years of experience in manufacturing dummy parts. Vinyl and foam shrinks at varying rates and dimension tolerances must reflect these characteristics. FTSS recommends that NHTSA avoid using any vinyl or foam tolerance smaller than ±0.10 in.

Agency Response: VRTC checked all vinyl/foam parts in the drawing package

[52] FTSS Report re: Drawing of Arm for SID–IIs Dummy. Submitted following their petition for reconsideration, Docket No. NHTSA–2006–25442–37.

[53] It appears that due to confusion about where the 1.75 in dimension should be measured from, FTSS's measurements of this dimension were taken incorrectly. Accordingly, their measurements do not indicate a problem with the value of the 1.75 inch dimension. (See next section of this preamble.)

and the only tolerances smaller than ±0.10 in were on 180–6011–1 and –2. These tolerances were ±0.05 in. The agency agrees that these tolerances should be changed to ±0.10 in for practicability reasons. Accordingly, note #4 in drawings 180–6011–1/2 is changed to read ''Tolerance ±.10 apply to all dimensions unless otherwise specified.''

c. Issues Raised By Denton

1. Drawings 180–1007, 180–4701, 180–5302, 180–5360, 180–5340, 180–5505, 180–5509, 180–5501, 180–5700, 180–5701, 180–5702, 180–5707, 180–5900–1, 180–5900–2, 180–5901–1, 180–5901–2, 180–5705

Denton stated, ''the last note on each of these drawings says that it is the same as some other drawing for a different dummy except for a change described in this note. We request that this last note be deleted from each drawing. We think that keeping these notes will cause confusion.''

Agency Response: NHTSA disagrees. We asked Denton to elaborate on the reason for the confusion.[54] Denton responded that the notes are difficult to explain to customers, because it is expected that identical parts will be referenced to each other, while different parts will not be. We do not believe this reason warrants deleting the notes. These notes clarify how the SID–IIsD drawing is different from another very similar drawing and facilitates easy identification of those differences. Accordingly, we are denying this request and will keep clarification notes on these drawings.

2. Drawing 180–4212, Flange, Lower

Denton stated that ''the material should be 1018 or equivalent.'' Denton informed NHTSA that it believes ''there is no reason for 1117 steel to be called out for this part. 1018 steel is used on many parts in the dummy and meets all of the requirements for this part. Calling out a special steel for one part simply adds cost to the part for no reason since a special material must be ordered in small quantities and handled just for this part.

Agency Response: We agree to change the material for drawing 180–4212 to CRS 1018. We investigated specifications for flange material in the HIII5F dummy drawing and compared those to the SID–IIsD package. The HIII5F drawings for the lumbar flanges (880105–1093 & –1097) call for SAE 1117 steel; the SID–IIs upper lumbar flange (180–4211) calls for 1018 CRS; and the SID–IIs lower lumbar flange (180–4212) calls for SAE 1117 steel. FTSS, the dummy manufacturer initially involved with development of the SID–IIsD, indicated that SAE 1117 and CRS 1018 have similar yield strength. The agency has determined that specifying CRS 1018 is appropriate for the reasons provided by Denton and FTSS. However, the agency is not adding ''or equivalent.'' This allowance ''or equivalent,'' is given for non-metal materials in the SID–IIs because plastics, rubbers, and other non-metals do not have well-defined material properties. With the exception of the ES–2re, other dummy drawing packages do not generally allow equivalent metal materials.[55]

3. Drawing 180–1000, 6 Axis Head Assembly

Denton stated that ''the skin thickness should be defined over a region of at least ±20 degrees on each side of each plane A to cover a region in the back view. Also, the thickness should be confined to a region in the side view. This would define an impact region on each side of the head that must meet the thickness requirements.''

Agency Response: The petitioner provided no head skin thickness data with which to make a specification in these regions. The agency declines to expend resources at this time to develop further specifications in this area.

4. Drawing 180–2006, Upper Neck Bracket

Denton noted that ''this drawing appears identical to 880105–207, and should therefore be treated like other identical drawings, such as 180–2009 where there is simply a reference to the identical drawing. Also, if this is done the material callout should be removed.''

Agency Response: The request is granted. VRTC has examined the differences between the drawing for the HIII5F upper neck bracket part (880105–207) and that for the SID–IIsD (180–2006) and has determined small differences between them will not affect part functionality or interchangeability. FTSS, the dummy manufacturer originally involved with development of the SID–IIsD, confirmed that the ''minor differences [between the two drawings] are on tolerance level, and would not affect the interchangeability between the two parts.'' Accordingly, we have removed the schematic, material specification, and scale from the drawing and added a note stating, ''Same as 880105–207 rev I.''

5. Drawings SA572–S62, 3 Axis Shoulder Load Cell, and 180–3330, Shoulder Loadcell Simulator, Assembly

Denton stated that: ''the center hole in the load cell for mounting the arm is incorrect. The structural replacement (180–3330) calls out a hole of .391 diameter × .230 ±.001 deep. The Load Cell (SA572–S62) calls out .375 diameter × .220 deep. These two drawings should match each other. Both drawings should be changed to .375 ±.001 diameter × .230 ±.002 deep. This will provide a precision fit for the shoulder screw that mounts into this hole.''

Agency Response: To assess this aspect of the petition, the agency evaluated the load cells from both FTSS and Denton, as well as the structural replacements. FTSS load cells measure 0.375 × 0.232 deep. The Denton load cell could not be located, but as this is Denton's comment, it is assumed that the petitioner's load cells match its recommendation. Accordingly, NHTSA has determined that Denton is correct. The load cell drawing SA572–S62 is corrected so that it matches the physical load cells, specifying .375 ±.001 diameter × .230 ±.002 deep. The structural replacement drawing 180–3330 is also modified to specify .375 ±.001 diameter × .230 ±.002 deep, so that it matches the load cell.

6. Drawing SA572–S64, 6–Axis Lumbar Spine Load Cell

With respect to the 6-axis lumbar spine load cell, Denton stated that ''the side view of the load cell in the drawing shows a neutral axis .900 in from the top of the load cell. Denton has manufactured this load cell since 1995 with a neutral axis .875 in from the top face of the load cell. Either the dimension is in error or it must be noted to consult the load cell manufacturer for the correct dimension.''

Agency Response: We agree that a dimension defining the neutral axis of the load cell is not appropriate in this case as FTSS and Denton produce load cells with different neutral axes. (The neutral axis distance for the FTSS load cell is 0.900 in.)[56] Accordingly, we have removed the .900 dimension and have added a note in its place that states to

[54] See ex parte memorandum in the docket.

[55] The ES–2re allows equivalent materials, including metals, as indicated by the ''Material Ref.'' label in the title block. We believe this is due to the fact that the ES–2re is a modification of the EuroSID, which was originally developed in Europe, and the original materials were defined by European material standards. Thus, by defining a reference material, equivalent American materials could be used.

[56] *See* ex parte memorandum in docket.

consult with the load cell manufacturer for the neutral axis dimension.

d. Agency Corrections and Clarifications

In this section, the agency makes further corrections and clarifications of the drawings and PADI.

1. Drawing 180–0000 (sheet 4 of 5), SID–IIsD Complete Assembly CG Location

In the final rule drawing package, CG locations were specified as negative values for the Neck CGx, Upper Leg CGx, Lower Leg CGz, and Foot CGz. However, assembly drawings for these components illustrating the CG location do not denote positive or negative axis directions. Thus, the agency believes that CG locations are clearer if all CG locations are specified as positive values, located at the locations shown in the drawing package. Accordingly, we have changed the Neck CGx from −0.30 to 0.30, the Upper Leg CGx from −5.01 to 5.01, the Lower Leg CGz from −5.94 to 5.94, and the Foot CGz from −2.00 to 2.00. Also on this drawing, an asterisk was added after the quantity of ''Arm Assembly, Molded'' to clarify that only one arm is installed on the complete dummy. This clarification is also found in Table 26 of the PADI. Finally, in the upper torso parts table, in the note (without chest jacket),* the asterisk was moved inside the parentheses to clarify that this line refers to the upper torso assembly drawing without the chest jacket.

2. Drawing 180–1000, Head Assembly

In drawing 180–1000, items 13–17 were labeled as reference. Items 13, 14, 16 and 17 are called out on drawing 180–0000, sheet 2 of 5, and thus are referenced on this drawing. However, item 15 is not called out on another drawing, thus it should not be labeled as reference. We have thus removed ''REF'' from the description for item 15, ''Screw, SHCS 10–24 X 7/16.'' Also on this drawing, the description for item 9 was changed to agree with the part's drawing.

3. Drawing 180–2000, Neck Assembly

The description of Item #12, ''Washer, 3/8″Ø Flat,'' needed correction. This washer is placed around the threaded portion of the neck cable to prevent the lower neck bushing from damage due to tightening of the nut to the neck cable. However, this portion of the neck cable has a diameter of ½ in (thus, it is physically impossible for a ⅜ in washer to fit around it). A washer is also used on the HIII5F neck, but in the HIII5F neck assembly drawing (880105–250), the description for the same part number is ''Washer, 1.06 OD. X .53 ID. X .06 CAD Plate.'' The correct description for Item #12 on drawing 180–2000 is ''1.06 OD X .53 ID X .06 WASHER.'' Drawing 180–2000 and Table 6 of the PADI have been amended to reflect this correction.

4. Drawing 180–4000, Lower Torso Assembly; and drawing 180–3000, Upper Torso Assembly

For the purposes of CG and weight measurements, the location of the lower abdominal rib potentiometer is changed from the upper torso to the lower torso.

The final rule drawing package indicates that this potentiometer assembly is considered part of the upper torso (180–3000). During communication with FTSS regarding clarification of the petitioner's various requests,[57] we found that FTSS was including the lower abdominal rib potentiometer in the lower torso for weight and CG measurement, because the potentiometer is mounted in the lower torso. NHTSA believes it is reasonable to consider the potentiometer assembly as part of the lower torso for weight and CG measurements because, while the end of the potentiometer assembly is mounted to the lower abdominal rib (upper torso), the potentiometer housing, which is the heaviest portion of the assembly, is mounted in the lower torso. As a practical matter, this change in where the lower abdominal rib pot is located for purposes of CG and weight measurement does not change in any manner the fully assembled dummy, but it does harmonize the specification with industry practice. Thus, we are amending the drawings to show the lower abdominal rib potentiometer in the lower torso assembly as follows: we have changed the quantity of ½ inch potentiometers (item 42, 180–3881) from 6 to 5 in the upper torso assembly (180–3000 sheet 1 of 2); removed ''REF'' from ½ inch potentiometer assembly (item 21, 180–3881) in the lower torso assembly drawing (180–4000 sheet 1 of 2); added the potentiometer assembly schematic to the lower torso CG drawing (180–4000 sheet 2 of 2); and updated complete assembly drawing 180–0000, sheet 4 of 5 with new CG and weight values. Additionally, we have modified Table 7 (Upper Torso Assembly Components), Table 9 (Lower Torso Assembly Components) and Table 20 (SID–IIsD Total and Segment Masses) of the PADI to reflect these changes in the drawing package. We have also made modifications to Section 5.3.1 (instructions for removal of the upper torso), Section 5.5.1 (disassembly of the lower torso), Section 6.5.4.2 (installation of the lower abdominal displacement potentiometer), and Section 8.1 (Thoracic and Abdominal Rib Structure), and related figures to account for the 5th pot being part of the lower torso assembly.

[57] *See* ex parte memorandum in docket.

5. Drawing 180–4000, Lower Torso Assembly, Sheet 1 of 2

The description of item 18 is changed from ''HEX NUT, JAM ⅝–18'' TO ''NUT, HEX JAM ⅝–18 LOCK NUT'' to reflect the actual part. A lock nut ensures that the parts do not become loose.

6. Drawing 180–4000, Lower Torso Assembly, Sheet 2 of 2

The orientation of the CG x-axis needed clarification as it is not clear in this drawing. We have added a second note to this drawing that states, ''The X axis is parallel to the top surface of the lumbar spine load cell simulator.''

7. Drawing 180–4402, Femur Holding Shaft—Pelvis

The diameter of the shaft (0.49 +.000/−.002 in) needed correction. This shaft passes through a spherical bearing (9002608) with ID 0.5000 +.0025/−.0005 in, contained within the femur assembly (180–4423–1/–2). However, if the shaft were made to the existing final rule specification, ''slop'' between the bearing and shaft would result because of too much space between them. Physical measurements of multiple shafts indicate that it has a diameter of 0.498 in, which is 0.008 in out of specification. We have changed the femur holding shaft diameter to .498 ±.001 in to reflect currently manufactured parts and to ensure good fit between the shaft and bearing.

8. Drawing 180–9000, SID–IIsD Headform Assembly, Sheet 1 of 2

The orientation of the nodding blocks on the neck did not represent their orientation in the physical neck/headform assembly. Their orientation on the drawing is corrected to reflect the physical assembly.

9. Drawing Package Changes for Consistency of Part Names

Corrections were made to the part descriptions in the following assembly drawings to match the part names on individual drawings: Drawing 180–0000 sheet 1 of 5, Item 3; Drawing 180–3881, Item 4; Drawing 180–5000–1/2, Item 7; Drawing 180–5501, Item 2; Drawing 180–5901–2, Item 5; Drawing 180–9000, Item 10; and Drawing 180–9002, Items 3 and 7.

10. Other Changes to PADI and to Parts/Drawings List

• PADI Section 6.5.2, Installation of Rib Accelerometers: Instruction number 2 in this section, stating that accelerometer configuration for each rib is identical, is incorrect. The accelerometers mounted in thoracic ribs 1 and 2 and abdominal rib 1 are configured differently than those mounted in thoracic rib 3 and abdominal rib 2. This instruction has been corrected and a new figure added to illustrate the difference in configuration.

• PADI page 2: the website to find docket materials was changed from *http://dms.dot.gov to www.regulations.gov*

• Some PADI figures were updated to improve clarity of instructions.

• The Parts/Drawings List was updated to reflect changes made to the drawing package in this final rule.

• The part names for drawings 180–1005 and 180–3005 were changed in the PADI to agree with the part name in the drawing package.

• The Parts/Drawings List was updated to reflect changes made to the drawing package in this final rule. In addition to the changes previously discussed in this preamble, the following part descriptions in the parts/drawings list were changed for consistency with part names in the drawing package: 180–1005, 180–3005, 6000075, 180–5504, 180–5508, 180–5708, 180–5900–1/2, and 180–5905.

XII. Rulemaking Analyses and Notices

Executive Order 12866 and DOT Regulatory Policies and Procedures

Executive Order 12866, ''Regulatory Planning and Review,'' provides for making determinations whether a regulatory action is ''significant'' and therefore subject to Office of Management and Budget (OMB) review and to the requirements of the Executive Order. This rulemaking action was not considered a significant regulatory action under Executive Order 12866. This rulemaking action was also determined not to be significant under the Department of Transportation's (DOT's) regulatory policies and procedures (44 FR 11034, February 26, 1979).

NHTSA's specifications in 49 CFR part 572 for a 5th percentile adult female side impact dummy that the agency will use in research, compliance tests of the Federal side impact protection safety standards, and consumer information programs do not impose any requirements on anyone. Businesses would be affected only if they choose to manufacture or test with the dummy. The cost of an uninstrumented SID–IIsD is approximately $47,000. Instrumentation adds approximately $24,000 for minimum requirements. The total cost of a minimally-instrumented compliance dummy is approximately $71,000. The amendments made in today's document will not affect the cost of the dummy. Because the economic impacts of this final rule are minimal, no further regulatory evaluation is necessary.

Regulatory Flexibility Act

Pursuant to the Regulatory Flexibility Act (5 U.S.C. 601 *et seq.,* as amended by the Small Business Regulatory Enforcement Fairness Act (SBREFA) of 1996), whenever an agency is required to publish a proposed or final rule, it must prepare and make available for public comment a regulatory flexibility analysis that describes the effect of the rule on small entities (i.e., small businesses, small organizations, and small governmental jurisdictions), unless the head of the agency certifies the rule will not have a significant economic impact on a substantial number of small entities. The Small Business Administration's regulations at 13 CFR part 121 define a small business, in part, as a business entity ''which operates primarily within the United States.'' (13 CFR 121.105(a)).

We have considered the effects of this rulemaking under the Regulatory Flexibility Act. I hereby certify that this rulemaking action will not have a significant economic impact on a substantial number of small entities. This action will not have a significant economic impact on a substantial number of small entities because the rule does not impose or rescind any requirements for anyone. The amendments made in this document will not affect the cost of the dummy. NHTSA does not require anyone to manufacture the dummy or to test vehicles with it.

National Environmental Policy Act

NHTSA has analyzed this final rule for the purposes of the National Environmental Policy Act and determined that it will not have any significant impact on the quality of the human environment.

Executive Order 13132 (Federalism)

Executive Order 13132 requires NHTSA to develop a process to ensure ''meaningful and timely input by State and local officials in the development of regulatory policies that have federalism implications.'' ''Policies that have federalism implications'' is defined in the Executive Order to include regulations that have ''substantial direct effects on the States, on the relationship between the national government and the States, or on the distribution of power and responsibilities among the various levels of government.'' Under Executive Order 13132, the agency may not issue a regulation with Federalism implications, that imposes substantial direct compliance costs, and that is not required by statute, unless the Federal government provides the funds necessary to pay the direct compliance costs incurred by State and local governments, the agency consults with State and local governments, or the agency consults with State and local officials early in the process of developing the regulation.

NHTSA has examined today's final rule pursuant to Executive Order 13132 (64 FR 43255, August 10, 1999) and concluded that no additional consultation with States, local governments or their representatives is mandated beyond the rulemaking process. The agency has concluded that the rule does not have federalism implications because the rule does not have ''substantial direct effects on the States, on the relationship between the national government and the States, or on the distribution of power and responsibilities among the various levels of government.'' Moreover, the amendments made in this document will not affect the cost of the dummy.

Unfunded Mandates Reform Act

Section 202 of the Unfunded Mandates Reform Act of 1995 (UMRA) requires Federal agencies to prepare a written assessment of the costs, benefits and other effects of proposed or final rules that include a Federal mandate likely to result in the expenditure by State, local or tribal governments, in the aggregate, or by the private sector, of more than $100 million in any one year (adjusted for inflation with base year of 1995). Before promulgating a NHTSA rule for which a written statement is needed, section 205 of the UMRA generally requires us to identify and consider a reasonable number of regulatory alternatives and adopt the least costly, most cost-effective or least burdensome alternative that achieves the objectives of the rule. The provisions of section 205 do not apply when they are inconsistent with applicable law. Moreover, section 205 allows us to adopt an alternative other than the least costly, most cost-effective or least burdensome alternative if we publish with the final rule an

explanation why that alternative was not adopted.

This rule does not impose any unfunded mandates under the Unfunded Mandates Reform Act of 1995. This rule does not meet the definition of a Federal mandate because it does not impose requirements on anyone. Further, it will not result in costs of $100 million or more to either State, local, or tribal governments, in the aggregate, or to the private sector. The amendments made in this document will not affect the cost of the dummy. Thus, this rule is not subject to the requirements of sections 202 and 205 of the UMRA.

Civil Justice Reform

Pursuant to Executive Order 12778, ''Civil Justice Reform,'' we have considered whether this rule will have any retroactive effect. This rule does not have any retroactive effect. A petition for reconsideration or other administrative proceeding will not be a prerequisite to an action seeking judicial review of this rule. This rule does not preempt the states from adopting laws or regulations on the same subject, except that it does preempt a state regulation that is in actual conflict with the Federal regulation or makes compliance with the Federal regulation impossible or interferes with the implementation of the Federal statute.

Paperwork Reduction Act

Under the Paperwork Reduction Act of 1995, a person is not required to respond to a collection of information by a Federal agency unless the collection displays a valid control number from the Office of Management and Budget (OMB). This final rule does not have any requirements that are considered to be information collection requirements as defined by the OMB in 5 CFR part 1320.

National Technology Transfer and Advancement Act

Section 12(d) of the National Technology Transfer and Advancement Act of 1995 (NTTAA), Public Law 104–113, section 12(d) (15 U.S.C. 272) directs NHTSA to use voluntary consensus standards in its regulatory activities unless doing so would be inconsistent with applicable law or otherwise impractical. Voluntary consensus standards are technical standards (*e.g.,* materials specifications, test methods, sampling procedures, and business practices) that are developed or adopted by voluntary consensus standards bodies, such as the Society of Automotive Engineers (SAE). The NTTAA directs us to provide Congress, through OMB, explanations when we decide not to use available and applicable voluntary consensus standards.

The following voluntary consensus standards have been used in developing the SID–IIsD dummy:

- SAE Recommended Practice J211, Rev. Mar95 ''Instrumentation for Impact Tests''; and
- SAE J1733 of 1994–12 ''Sign Convention for Vehicle Crash Testing''.

Plain Language

Executive Order 12866 requires each agency to write all rules in plain language. Application of the principles of plain language includes consideration of the following questions:

—Has the agency organized the material to suit the public's needs?

—Are the requirements in the rule clearly stated?

—Does the rule contain technical language or jargon that is not clear?

—Would a different format (grouping and order of sections, use of headings, paragraphing) make the rule easier to understand?

—Would more (but shorter) sections be better?

—Could the agency improve clarity by adding tables, lists, or diagrams?

—What else could the agency do to make this rule easier to understand?

If you have any responses to these questions, please write to us about them.

Regulation Identifier Number

The Department of Transportation assigns a regulation identifier number (RIN) to each regulatory action listed in the Unified Agenda of Federal Regulations. The Regulatory Information Service Center publishes the Unified Agenda in April and October of each year. You may use the RIN contained in the heading at the beginning of this document to find this action in the Unified Agenda.

List of Subjects in 49 CFR Part 572

Incorporation by reference, Motor vehicle safety.

■ In consideration of the foregoing, NHTSA amends 49 CFR part 572 as follows:

PART 572—ANTHROPOMORPHIC TEST DEVICES

■ 1. The authority citation for part 572 continues to read as follows:

Authority: 49 U.S.C. 322, 30111, 30115, 30117 and 30166; delegation of authority at 49 CFR 1.50.

Subpart O, Hybrid III 5th Percentile Female Test Dummy, Alpha Version

■ 2. Section 572.137 is amended by revising the third sentence in paragraph (a) and the third sentence in paragraph (b), to read as follows:

§ 572.137 Test conditions and instrumentation.

(a) * * * The impactor shall have a mass of 13.97 ±0.23 kg (30.8 ±0.5 lbs) and a minimum mass moment of inertia of 3646 kg-cm^2 (3.22 lbs-in-sec^2) in yaw and pitch about the CG of the probe. * * *

(b) * * * The impactor shall have a mass of 2.99±0.23 kg (6.6±0.5 lbs) and a minimum mass moment of inertia of 209 kg-cm^2 (0.177 lb-in-sec^2) in yaw and pitch about the CG of the probe. * * *

* * * * *

Subpart V, SID–IIsD Side Impact Crash Test Dummy, Small Adult Female

■ 3. Section 572.190 is amended by revising paragraph (a)(1), the introductory text of paragraph (a)(2), paragraphs (a)(3), (b), and (c)(1), to read as follows:

§ 572.190 Incorporated materials.

(a) * * *

(1) A parts/drawing list entitled, ''Parts/Drawings List, Part 572 Subpart V, SID–IIsD, July 1, 2008,''

(2) A drawings and inspection package entitled ''Drawings and Specifications for the SID–IIsD Small Female Crash Test Dummy, Part 572 Subpart V, July 1, 2008,'' consisting of:

* * * * *

(3) A procedures manual entitled, ''Procedures for Assembly, Disassembly, and Inspection (PADI) of the SID–IIsD Side Impact Crash Test Dummy, July 1, 2008,'' incorporated by reference in § 572.191;

* * * * *

(b) The Director of the Federal Register approved the materials incorporated by reference in accordance with 5 U.S.C. 552(a) and 1 CFR part 51. Copies of the materials may be inspected at the Department of Transportation, Docket Operations, Room W12–140, 1200 New Jersey Avenue, SE., Washington, DC 20590, telephone (202) 366–9826, and at the National Archives and Records Administration (NARA), and in electronic format through Regulations.gov. For information on the availability and inspection of this material at NARA, call 202–741–6030, or go to: *http://www.archives.gov/federal_register/code_of_federal_regulations/ibr_locations.html.* For

information on the availability and inspection of this material at Regulations.gov, call 1–877–378–5457, or go to: *http://www.regulations.gov*.

(c) * * *

(1) The Parts/Drawings List, Part 572 Subpart V, SID–IIsD, July 1, 2008, referred to in paragraph (a)(1) of this section, the package entitled Drawings and Specifications for SID–IIsD Small Female Crash Test Dummy, Part 572 Subpart V, July 1, 2008, referred to in paragraph (a)(2) of this section, and the PADI document referred to in paragraph (a)(3) of this section, are available in electronic format through *www.Regulations.gov* and in paper format from Leet-Melbrook, Division of New RT, 18810 Woodfield Road, Gaithersburg, MD 20879, (301) 670–0090.

■ 4. Section 572.191 is amended by revising paragraphs (a), (b), and (c), to read as follows:

§ 572.191 General Description.

(a) The SID–IIsD Side Impact Crash Test Dummy, small adult female, is defined by:

(1) The drawings and specifications contained in the ''Drawings and Specifications for SID–IIsD Small Female Crash Test Dummy, Part 572 Subpart V, July 1, 2008,'' which includes the technical drawings and specifications described in Drawing 180–0000, the titles of which are listed in Table A;

TABLE A

Component assembly	Drawing number
6 Axis Head Assembly	180–1000
Neck Assembly	180–2000
Upper Torso Assembly	180–3000
Clamping Washer	180–3005
Lower Torso Assembly Complete	180–4000
Complete Leg Assembly, Left	180–5000–1
Complete Leg Assembly, Right	180–5000–2
Arm Assembly Left Molded	180–6000–1
Arm Assembly Right Molded	180–6000–2

(2) The ''Parts/Drawing List, Part 572 Subpart V, SID–IIsD,'' dated July 1, 2008 and containing 7 pages,

(3) A listing of available transducers-crash test sensors for the SID–IIsD Side Impact Crash Test Dummy, 5th percentile adult female, is shown in drawing 180–0000 sheet 2 of 5, dated July 1, 2008,

(4) ''Procedures for Assembly, Disassembly, and Inspection (PADI) of the SID–IIsD Side Impact Crash Test Dummy, July 1, 2008,'' and,

(5) Sign convention for signal outputs reference document SAE J1733 Information Report, titled ''Sign Convention for Vehicle Crash Testing,'' dated July 12, 1994, incorporated by reference in § 572.200(k).

(b) Exterior dimensions of the SID–IIsD Small Adult Female Side Impact Crash Test Dummy are shown in drawing 180–0000 sheet 3 of 5, dated July 1, 2008.

(c) Weights and center of gravity locations of body segments are shown in drawing 180–0000 sheet 4 of 5, dated July 1, 2008.

* * * * *

■ 5. Section 572.193 is amended by revising paragraph (c)(1) to read as follows:

§ 572.193 Neck assembly.

* * * * *

(c) * * *.

(1) The pendulum deceleration pulse is characterized in terms of decrease in velocity as obtained by integrating the pendulum acceleration output from time zero:

10.0	−2.20 to −2.80
15.0	−3.30 to −4.10
20.0	−4.40 to −5.40
25.0	−5.40 to −6.10
>25.0 < 100	−5.50 to −6.20

* * * * *

■ 6. Section 572.194 is amended by revising paragraphs (b)(7), (b)(10), and (c) adding paragraph (b)(11), to read as follows:

§ 572.194 Shoulder.

* * * * *

(b) * * *

(7) Orient the arm to point forward at 90 ±2 degrees relative to the inferior-superior orientation of the upper torso spine box incline.

* * * * *

(10) The dummy's arm-shoulder is impacted at 4.3 ± 0.1 m/s with the impactor meeting the alignment and contact point requirements of paragraph (b)(9) of this section.

(11) Allow a period of at least thirty (30) minutes between successive tests of the same shoulder assembly.

* * * * *

(c) *Performance criteria.*

(1) While the impactor is in contact with the dummy's arm, the shoulder shall compress not less than 28 mm and not more than 37 mm measured by the potentiometer specified in (a);

(2) Peak lateral acceleration of the upper spine (T1) shall not be less than 17 g and not more than 22 g;

(3) Peak impactor acceleration shall be not less than 13 g and not more than 18 g.

■ 7. Section 572.195 is amended by revising paragraph (b)(7), adding paragraphs (b)(11) and (b)(12), revising paragraphs (c)(1)(ii), (c)(2) and (c)(3), to read as follows:

§ 572.195 Thorax with arm.

* * * * *

(b) * * *

(7) Orient the arm downward to the lowest detent such that the longitudinal centerline of the arm is parallel to the inferior-superior orientation of the spine box.

* * * * *

(11) Time zero is defined as the time of contact between the impact probe and the arm.

(12) Allow a period of at least thirty (30) minutes between successive tests of the same thorax assembly.

(c) * * *

(1) * * *

(ii) Upper thorax rib not less than 25 mm and not more than 32 mm;

* * * * *

(2) Peak lateral acceleration of the upper spine (T1) shall not be less than 34 g and not more than 43 g, and the lower spine (T12) not less than 29 g and not more than 37 g;

(3) Peak impactor acceleration after 5 ms after time zero shall be not less than 30 g and not more than 36 g.

■ 8. Section 572.196 is amended by revising paragraphs (b)(3), (c)(1)(i), (c)(1)(iii), (c)(2), and (c)(3), and by adding paragraph (b)(10), to read as follows:

§ 572.196 Thorax without arm.

* * * * *

(b) * * *

(3) Align the outermost portion of the pelvis flesh of the impacted side of the seated dummy tangent to a vertical plane located within 10 mm of the side edge of the bench as shown in Figure V6–A, while the midsagittal plane of the dummy is in vertical orientation.

* * * * *

(10) Allow a period of at least thirty (30) minutes between successive tests of the same thorax assembly.

(c) * * *

(1) * * *

(i) Upper thorax rib not less than 32 mm and not more than 40 mm;

* * * * *

(iii) Lower thorax rib not less than 35 mm and not more than 43 mm;

(2) Peak acceleration of the upper spine (T1) shall not be less than 13 g and not more than 17 g and the lower spine (T12) not less than 7 g and not more than 11 g;

(3) Peak impactor acceleration shall not be less than 14 g and not more than 18 g.

■ 9. Section 572.197 is amended by revising paragraphs (b)(3), (b)(9), (c)(1), and (c)(2), and by adding paragraph (b)(10), to read as follows:

§ 572.197 Abdomen.

* * * * *

(b) * * *

(3) Align the outermost portion of the pelvis flesh of the impacted side of the seated dummy tangent to a vertical plane located within 10 mm of the side edge of the bench as shown in Figure V7–A in Appendix A to this subpart, while the midsagittal plane of the dummy is in vertical orientation.

* * * * *

(9) The dummy's abdomen is impacted at 4.3 ± 0.1 m/s.

(10) Allow a period of at least thirty (30) minutes between successive tests of the same abdomen assembly.

(c) * * *

(1) While the impact probe is in contact with the dummy's abdomen, the deflection of the upper abdominal rib shall be not less than 36 mm and not more than 47 mm, and the lower abdominal rib not less than 33 mm and not more than 44 mm.

(2) Peak acceleration of the lower spine (T12) laterally oriented accelerometer shall be not less than 9 g and not more than 14 g;

* * * * *

■ 10. Section 572.198 is amended by revising paragraph (b)(7), adding paragraphs (b)(11) and (b)(12) and by revising paragraphs (c)(2) and (c)(3), and to read as follows:

§ 572.198 Pelvis acetabulum.

* * * * *

(b) * * *

(7) Rotate the arm downward to the lowest detent such that the longitudinal centerline of the arm is parallel to the inferior-superior orientation of the spine box.

* * * * *

(11) Time zero is defined as the time of contact between the impact probe and the pelvis plug.

(12) Allow a period of at least 120 minutes between successive tests of the same pelvis assembly.

(c) * * * * *

(2) Peak lateral acceleration of the pelvis after 6 ms after time zero is not less than 34 g and not more than 42 g;

(3) Peak acetabulum force is not less than 3.60 kN and not more than 4.30 kN.

■ 11. Section 572.199 is amended by revising paragraphs (a), (b)(4) through (b)(9), by adding paragraphs (b)(10) and (b)(11), and by revising paragraphs (c)(1), (c)(2) and (c)(3), to read as follows:

§ 572.199 Pelvis iliac.

(a) The iliac is part of the lower torso assembly shown in drawing 180–4000. The iliac test is conducted by impacting the side of the lower torso of the assembled dummy (drawing 180–0000). The dummy is equipped with a laterally oriented pelvis accelerometer as specified in 49 CFR 572.200(d), and iliac wing load cell SA572–S66, mounted as shown in sheet 2 of 5 of drawing 180–0000. When subjected to the test procedure as specified in paragraph (b) of this section, the pelvis shall meet performance requirements of paragraph (c) of this section.

(b) * * * * *

(4) Orient the arm downward to the lowest detent such that the longitudinal centerline of the arm is parallel to the inferior-superior orientation of the spine box.

(5) The midsagittal plane of the dummy is vertical, and superior surface of the lower half neck assembly load cell replacement (180–3815) in the lateral direction is within ±1 degree relative to the horizontal as shown in Figure V9–A.

(6) While maintaining the dummy's position as specified in paragraphs (b)(3), (4) and (5) of this section, the top of the shoulder rib mount (180–3352) orientation in the fore-and-aft direction is within ±1.0 degree relative to horizontal as shown in Figure V9–B in Appendix A to this subpart.

(7) The pelvis impactor is specified in 49 CFR 572.200(c).

(8) The dummy is positioned with respect to the impactor such that the longitudinal centerline of the impact probe is in line with the longitudinal centerline of the iliac load cell access hole, and the 88.9 mm dimension of the probe's impact surface is aligned horizontally.

(9) The impactor is guided, if needed, so that at contact with the pelvis, the longitudinal axis of the impactor is within ±1 degree of a horizontal plane and perpendicular to the midsagittal plane of the dummy.

(10) The dummy's pelvis is impacted at the iliac location at 4.3±0.1 m/s.

(11) Allow a period of at least 120 minutes between successive tests of the same pelvis assembly.

(c) * * * * *

(1) Peak acceleration of the impactor is not less than 36 g and not more than 45 g;

(2) Peak acceleration of the pelvis is not less than 28 g and not more than 39 g;

(3) Peak iliac force is not less than 4.10 kN and not more than 5.10 kN.

12. Section 572.200 is amended by revising paragraph (j) to read as follows:

§ 572.200 Instrumentation and test conditions.

* * * * *

(j) Performance tests are conducted, unless specified otherwise, at any temperature from 20.6 to 22.2 degrees C. (69 to 72 degrees F.) and at any relative humidity from 10% to 70% after exposure of the dummy to those conditions for a period of 4 hours.

* * * * *

■ 13. Figures V4–A, V9–A and V9–B in ''Appendix A to Subpart V of Part 572–Figures'' are revised to read as follows:

Appendix A to Subpart V of Part 572—Figures

* * * * *

BILLING CODE 4910–59–P

FIGURE V4-A
SHOULDER IMPACT

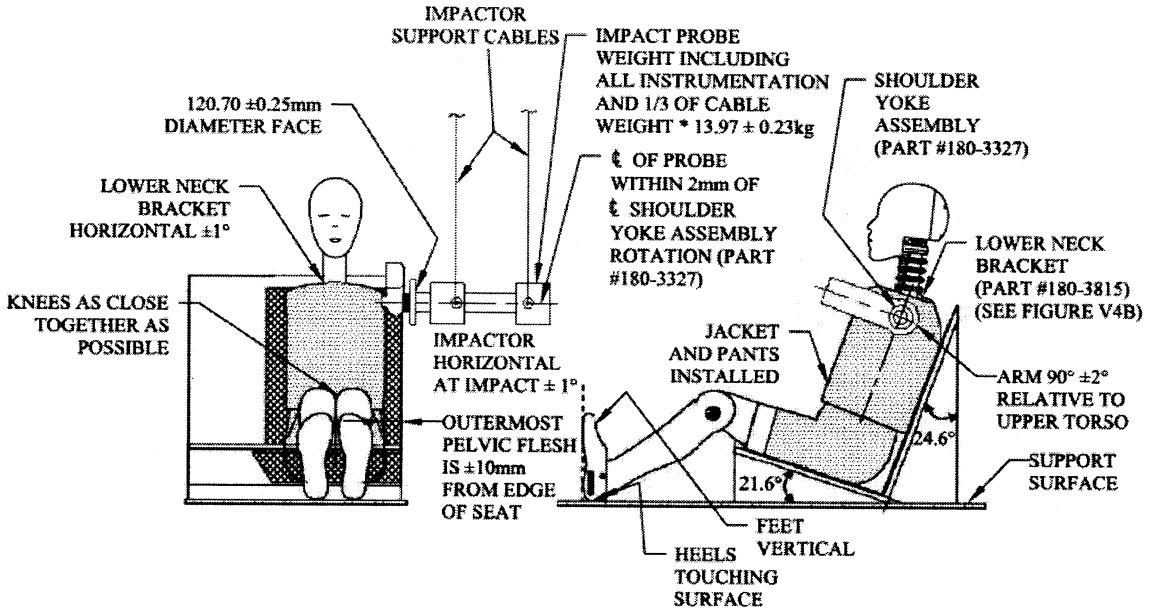

* 1/3 OF CABLE WEIGHT NOT TO EXCEED 5% OF THE TOTAL IMPACTOR PROBE WEIGHT

* * * * *

FIGURE V9-A
ILIAC IMPACT

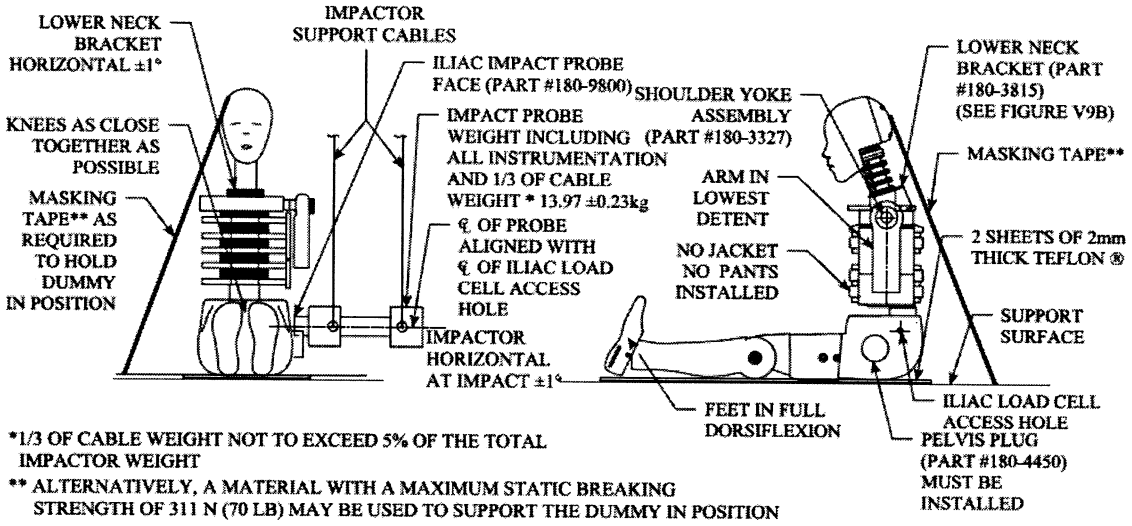

*1/3 OF CABLE WEIGHT NOT TO EXCEED 5% OF THE TOTAL IMPACTOR WEIGHT

** ALTERNATIVELY, A MATERIAL WITH A MAXIMUM STATIC BREAKING STRENGTH OF 311 N (70 LB) MAY BE USED TO SUPPORT THE DUMMY IN POSITION

FIGURE V9-B
ILIAC IMPACT
(NON-IMPACT SIDE VIEW)

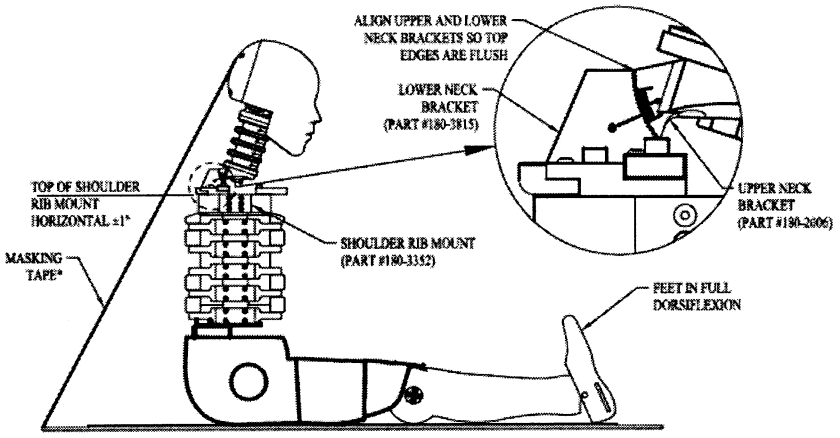

* ALTERNATIVELY, A MATERIAL WITH A MAXIMUM STATIC BREAKING STRENGTH OF 311 N (70 LB) MAY BE USED TO SUPPORT THE DUMMY IN POSITION

Issued: June 5, 2009.

Ronald L. Medford,

Acting Deputy Administrator.

[FR Doc. E9–13605 Filed 6–22–09; 8:45 am]

BILLING CODE 4910–59–C

Federal Register

Tuesday,
June 23, 2009

Part IV

Department of Transportation

Federal Railroad Administration

High-Speed Intercity Passenger Rail (“HSIPR”) Program; Notice

DEPARTMENT OF TRANSPORTATION

Federal Railroad Administration

[Docket No. FRA–2009–0045]

High-Speed Intercity Passenger Rail (''HSIPR'') Program

AGENCY: Federal Railroad Administration (FRA), Department of Transportation (DOT).

ACTION: Notice of funding availability; issuance of interim program guidance.

SUMMARY: On April 16, 2009, President Obama, together with Vice President Biden and Secretary of Transportation LaHood, announced a new vision for developing high-speed rail in America. They called for a collaborative effort among the Federal Government, States, railroads, and other key stakeholders to help transform America's transportation system through a national network of high-speed rail corridors. This notice builds on this ''Vision for High-Speed Rail'' (available on FRA's Web site) by detailing the application requirements and procedures for obtaining funding for high-speed rail projects under the American Recovery and Reinvestment Act of 2009 (ARRA) and the Department of Transportation Appropriations Acts of 2008 and 2009 (FY 2008/2009 DOT Appropriations Acts), while laying the foundation for a longer-term program to establish a network of high-speed rail corridors.

The evaluation and selection criteria in this notice are intended to prioritize projects that deliver transportation, economic recovery and other public benefits, including energy independence, environmental quality, and livable communities; ensure project success through effective project management, financial planning and stakeholder commitments; and emphasize a balanced approach to project types, locations, innovation, and timing.

This notice describes multiple funding paths to accommodate projects at different stages of development, while also rationalizing the variety of statutory and administrative requirements underpinning the program. FRA recognizes the unique challenges and opportunities presented, and will seek, to the maximum extent permitted under law and administrative procedures, to work collaboratively with applicants and stakeholders throughout the process.

DATES:

Public comments. Public comments on this notice are due no later than July 10, 2009.

Preapplications. Preapplications for all funding Tracks are due no later than July 10, 2009. (FRA encourages earlier submission of preapplications).

Applications. Applications for funding for Track 1 (Projects), Track 3 (Planning), and Track 4 (FY2009 Appropriations Projects) are due no later than August 24, 2009; applications for funding Track 2 (Service Development Programs) are due no later than October 2, 2009. (*See* Section 1.6 in the **SUPPLEMENTARY INFORMATION** section of this notice for descriptions of each funding Track, and Section 4.3.6 in the **SUPPLEMENTARY INFORMATION** section of this notice for additional information on deadlines for both preapplications and applications.) FRA reserves the right to modify these deadlines, based on comments received on this notice.

ADDRESSES:

Public comments. To ensure that comments are not entered into the docket more than once, please submit comments, identified by docket number [FRA–2009–0045], by only one of the following methods:

- *Web site:* The U.S. Government electronic docket site is *http://www.regulations.gov*. Go to this Web site and follow the instructions for submitting comments into docket number [FRA–2009–0045];
- *Mail:* Mail comments to U.S. Department of Transportation, 1200 New Jersey Avenue, SE., Docket Operations, MS–30, Room W12–140, Washington, DC 20590;
- *Hand delivery or courier:* Bring comments to the U.S. Department of Transportation, 1200 New Jersey Avenue, SE., Docket Operations, West Building Ground Floor, Room W12–140, Washington, DC 20590, between 9 a.m. and 5 p.m., Monday through Friday, except Federal holidays; or
- *Fax:* Telefax comments to 202–493–6330.

Instructions for submitting public comments: The agency name (Federal Railroad Administration) and the docket number [FRA–2009–0045] for this notice must be submitted with any comments. If comments are submitted by mail or by hand, please submit two copies of the comments. For confirmation that the Federal Railroad Administration has received the comments, a self-addressed stamped postcard must be included. Note that all comments received by any method will be posted without change to *http://www.regulations.gov*, including any personal information provided, and will be available to Internet users. The Department's complete Privacy Act Statement is available for review in the **Federal Register** published April 11, 2000, (65 FR 19477), or by visiting *http://www.regulations.gov*.

Preapplications. Preapplications must be submitted to the HSIPR Program Manager electronically via e-mail at *HSIPR@dot.gov*. Pre-applicants should receive a confirmation e-mail, but are advised to request a return receipt to confirm transmission. Only preapplications received via e-mail as provided above shall be deemed properly filed.

Applications. Applications and supporting documentation must be submitted through *http://www.grantsolutions.gov*. If problems with *http://www.grantsolutions.gov* are encountered, applications and supporting documentation may be submitted to the HSIPR Program Manager electronically via e-mail at *HSIPR@dot.gov*. Supporting materials that cannot be submitted electronically may be mailed or hand delivered to: U.S. Department of Transportation, Federal Railroad Administration, 1200 New Jersey Avenue, MS–20, Room W38–202, SE., Washington, DC 20590 Attn. HSIPR Program. Applicants are encouraged to use special courier services to avoid shipping delays. Pre-application and application forms are available at *http://www.fra.dot.gov/us/content/2243*.

FOR FURTHER INFORMATION CONTACT: For further information regarding this notice and the grants program, please contact the FRA HSIPR Program Manager via e-mail at *HSIPR@dot.gov*, or by mail: U.S. Department of Transportation, Federal Railroad Administration, 1200 New Jersey Avenue, MS–20, SE., Washington, DC 20590 Attn. HSIPR Program.

SUPPLEMENTARY INFORMATION:

Table of Contents

Overview
1. Funding Opportunity Description
2. Award Information
3. Eligibility Information
4. Application and Submission Information
5. Application Review Information
6. Award Administration Information
7. FRA Contacts
List of Acronyms Appendix 1: Additional Information on Eligibility
Appendix 2: Additional Information on Planning and Engineering
Appendix 3: Additional Information on Award Administrations and Grant Conditions

Overview

FRA is soliciting public comment on this document through Docket Number FRA–2009–0045 (*http://www.regulations.gov*). While the interim guidance in this document does not

constitute a rulemaking, FRA will consider all comments received by July 10, 2009 and will publish any resultant clarifications or revisions to this document in the **Federal Register** and on FRA's Web site (*http://www.fra.dot.gov*). FRA began this comment process during its outreach sessions in May and June, in which over 1,100 stakeholders attended seven sessions around the country; in addition, a public docket was established for comment, and 110 comments were received as of June 15, 2009. FRA has already adjusted the approach contained herein based on this initial feedback.

Preapplications are required and the deadline for submissions (for all Tracks) is July 10, 2009. Applications may not be considered if preapplications are received after July 10, 2009; FRA encourages submission of preapplications earlier than the July 10 deadline. FRA will work with pre-applicants if necessary during the period prior to the application deadlines to ensure eligibility, appropriateness of application Track, and structure of project or program; applicants should work on completing full grant applications concurrent with preparation and review of preapplications.

Deadlines for submission of full grant applications under the four Tracks (see Section 1.6 for track descriptions) are: Track 1 (Projects), Track 3 (Planning), and Track 4 (FY2009 Appropriations Projects)—August 24, 2009; Track 2 (High-Speed Rail/Intercity Passenger Rail Service Development Programs)—October 2, 2009. To give prospective applicants adequate time to complete their applications (while incorporating any guidance clarifications or revisions), FRA may adjust application dates to allow for a minimum of 30 days for application submission following any material changes to guidance that arise from comments. For full details on these deadlines and how to satisfy them, prospective applicants should consult Section 4.3.6 of this guidance.

Section 1: Funding Opportunity Description

1.1 Authority

This program guidance and financial assistance announcement pertains to FRA's new High-Speed Intercity Passenger Rail Program (''HSIPR''), which consolidates the following recently-authorized and closely-related programs:

- The High-Speed Rail Corridor Development program, authorized under Section 501 of the Passenger Rail Investment and Improvement Act of 2008 (''PRIIA,'' Division B of Pub. L. 110–432, October 16, 2008, codified at 49 U.S.C. 26106);
- The Intercity Passenger Rail Service Corridor Capital Assistance program, authorized under Section 301 of PRIIA (codified at 49 U.S.C. chapter 244);
- The Congestion Grants program, authorized under Section 302 of PRIIA (codified at 49 U.S.C. 24105);
- The Fiscal Year (FY) 2009 Capital Assistance to States—Intercity Passenger Rail Service program, authorized and funded under the Department of Transportation Appropriations Act, 2009 (''FY 2009 DOT Appropriations Act,'' Title I of Division I of Pub. L. 111–8, March 11, 2009); and
- The FY 2008 Capital Assistance to States—Intercity Passenger Rail Service program, authorized and funded under the Department of Transportation Appropriations Act, 2008 (''FY 2008 DOT Appropriations Act,'' Title I of Division K of Pub. L. 110–161, December 26, 2007).

This document incorporates both (i) interim guidance required for this program pursuant to the American Recovery and Reinvestment Act of 2009 (''ARRA,'' Pub. L. 111–5, February 17, 2009); and (ii) interim guidance required pursuant to 49 U.S.C. 24402(a)(2). The funding made available under this financial assistance announcement was appropriated under ARRA, and the FY 2008/2009 DOT Appropriations Act. The funding opportunities described in this guidance are available under Catalog of Federal Domestic Assistance (CFDA) numbers 20.317 and 20.319.

1.2 Program Description and Legislative History

This program guidance and funding opportunity announcement represents the second major milestone in the implementation of the new HSIPR Program. It follows and builds upon *Vision for High-Speed Rail in America,* the Administration's April 2009 high-speed rail strategic plan for the implementation of this program (available at *http://www.fra.dot.gov/us/content/31*).

As one of President Obama's foremost transportation priorities, the HSIPR Program helps to address the nation's transportation challenges by investing in an efficient High-Speed Rail/Intercity Passenger Rail network that connects communities across America.

Congress established the framework for the program through the passage of three key pieces of legislation:

- Capital Assistance to States—Intercity Passenger Rail Service—In the FY 2008 DOT Appropriations Act, Congress established a new pilot program for joint Federal-State intercity passenger rail capital investment, known as Capital Assistance to States—Intercity Passenger Rail Service. Under this program, $30 million in Federal funding was made available to States on a competitive basis to fund up to 50 percent of the capital cost of improving Intercity Passenger Rail service; up to 10 percent of the $30 million was available for rail corridor planning grants. An additional $90 million was appropriated under similar terms as part of the FY 2009 DOT Appropriations Act.
- Passenger Rail Investment and Improvement Act of 2008 (PRIIA)—Enacted in October 2008, PRIIA represents the most sweeping Congressional action on intercity passenger rail since those that created the National Railroad Passenger Corporation (Amtrak) and the Northeast Corridor Improvement Project during the 1970s. In addition to reauthorizing Amtrak, PRIIA established three new competitive grant programs for funding High-Speed Rail/Intercity Passenger Rail capital improvements, each of which, as authorized, require a 20 percent non-Federal match:
  - Intercity Passenger Rail Service Corridor Capital Assistance (Section 301)—Under this section, the broadest of PRIIA's three new funding programs, States (including the District of Columbia), groups of States, interstate compacts, and public Intercity Passenger Rail agencies established by one or more State(s) may apply for grants for capital improvements to benefit all types of Intercity Passenger Rail service, including high-speed service. Amtrak may participate through a cooperative agreement with a State(s). To be eligible for funding under this program, proposed projects must meet a number of requirements (e.g., inclusion in a State Rail Plan).
  - High-Speed Rail Corridor Development (Section 501)—Although similar in structure, criteria, and conditions to Section 301, eligibility for this program is restricted to projects intended to develop Federally-designated High-Speed Rail corridors for Intercity Passenger Rail services that may reasonably be expected to reach speeds of at least 110 miles per hour (mph). Applicant eligibility under Section 501 is broadened from Section 301 to include Amtrak as well.
  - Congestion Grants (Section 302)—This program authorizes grants to States or to Amtrak (in cooperation with States) for facilities, infrastructure, and

equipment for high-priority rail corridor projects to reduce congestion or facilitate Intercity Passenger Rail ridership growth.

• American Recovery and Reinvestment Act of 2009 (ARRA)—The $8 billion in High-Speed Rail/Intercity Passenger Rail funding under ARRA ''jump starts'' the widespread improvement of High-Speed Rail/Intercity Passenger Rail service in the United States. The appropriation references the authorities included in Sections 301, 302, and 501 of PRIIA but states the ''Federal share of the costs for which a grant is made * * * shall be, at the option of the recipient, up to 100 percent.'' It also does not require that proposed projects be included in a State Rail Plan (and it excludes the costs of preparing such plans from eligibility for ARRA funding).

1.3 Selection Process and Priorities

The application process begins with a preapplication. The preapplication is a simple form intended to give FRA an early assessment of the universe of projects and programs, and to provide pre-applicants with any feedback necessary to complete their applications (*e.g.,* eligibility issues, most appropriate application Track to pursue, etc.). It also allows FRA and preapplicants to start a collaborative process for ensuring early program success. Preapplications should be submitted as early as possible, but no later than July 10, 2009; applicants should not wait for submission of, or any comments on, a preapplication before preparing their full applications. In recognition of a variety of considerations, including the urgency of project implementation as reflected in ARRA and the complexities of launching a new HSIPR program, FRA considers the preapplication to be an essential component of the application submission and decision making processes. As a result, FRA will only consider applications that were not supported by a timely filed preapplication only if there are special, compelling circumstances. Complete applications for Tracks 1, 3 and 4 are due on August 24, 2009 and for Track 2 on October 2, 2009. Once an application is received, it will proceed through a three-step process.

• Screening for completeness and eligibility (both applicant and project eligibility);

• Evaluation panel review process, applying ''evaluation criteria''; and

• Final review and selection, applying ''selection'' criteria.

See Section 5 for a full description of the review process and criteria.

1.3.1 Application Screening

Screening will confirm applicant and project eligibility, and ensure that the application provides complete and sufficient information for the evaluation process.

1.3.2 Evaluation Criteria

Eligible applications in all Tracks will be individually reviewed and assessed against seven evaluation criteria—organized into three categories—detailed below. For each of the applicable criteria, the application will be assigned a rating of between one and five points, based on the application's fulfillment of the objectives of each criterion. These individual criterion ratings will then be accounted according to priority of criteria (which vary by Track, as described in Section 5), to arrive at an overall rating for the application.

FRA will require a rigorous analysis of benefits and costs of proposed projects, with a focus on the transportation service and output measures that are fundamental to estimating other public benefits. Applicants must provide requested benefit and cost information the best available tools in order to ensure adequate assessment of business cases for projects.

EVALUATION CRITERIA

Evaluation criteria[1]	Example factors	Key documentation
Public Return on Investment		
1. Transportation Benefits	• Improved Intercity Passenger Rail service • Transportation network integration (including inter-modal connections) • Transportation safety benefits	• Service Development Plan (including business case; assessment of benefits and public investment).
2. Economic Recovery	• Preserving and creating jobs—particularly in economically-distressed areas	• Quantitative output measures (*service*—reliability, schedule, capacity; and *transportation*—passenger-miles, including sources—aviation, highway, induced).
3. Other Public Benefits	• Environmental quality • Energy efficiency • Livable communities	
Project Success Factors		
1. Project Management Approach 2. Sustainability of Benefits	• Organizational capacity • Track record of comparable projects • Adequacy of engineering • Reasonableness of schedule • Progress toward NEPA compliance • Thoroughness of management plan • Sufficiency of safety and security planning • Sufficiency of stakeholder agreements • Reasonableness of financial estimates • Availability of operating financial support • Quality of planning process	• Project management plan. • Financial plan (capital and operating). • Stakeholder agreements.

[1] See Section 4 for a detailed summary of submission requirements, and Section 5 for additional detail on evaluation and selection criteria.

EVALUATION CRITERIA—Continued

Evaluation criteria[1]	Example factors	Key documentation
Other Attributes		
1. Timeliness of Project Completion	• Project readiness • Reasonableness of completion schedule	• Project schedule.

1.3.3 Selection Criteria

After being assessed against the evaluation criteria, applications for each Track will collectively be reviewed to ensure consistency and to balance projects against national priorities and schedules. For this review, the FRA Administrator may consider several cross-cutting comparative criteria before final award determinations are made. The table below summarizes these additional selection criteria.

SELECTION CRITERIA

Selection criteria (balance and diversity)	Example factors
1. Region/location	• Geography and economic conditions.
2. Innovation	• Technology and industrial/capacity development.
3. Partnerships	• Multi-State agreements.
4. Tracks and round timing	• Project costs and schedules.

1.4 Program Implementation Opportunities and Challenges

In addition to the fiscal constraints currently affecting States, local governments, and businesses, the development of a comprehensive High-Speed Rail/Intercity Passenger Rail network faces challenges specific to this program and the rail industry. For instance, FRA recognizes the challenges associated with the need for agreements among multiple States and with private railroad companies, as well as the shortage of engineering professionals, planners, and managers with experience in High-Speed Rail/Intercity Passenger Rail development with project implementation in the United States.

The intent to establish a pipeline of future High-Speed Rail/Intercity Passenger Rail programs and projects poses a further challenge. The traditional pipeline for major transportation investments progresses from alternatives analysis to investment planning, preliminary engineering (PE) and environmental clearance, final design (FD), construction, and operations. With very narrow exceptions, States have historically lacked a Federal funding partner in High-Speed Rail/Intercity Passenger Rail development; thus, many States have no High-Speed Rail/Intercity Passenger Rail program at all, and others find their limited High-Speed Rail/Intercity Passenger Rail development efforts stalled at various points along the typical progression.

This situation necessitates a Federal funding approach that is flexible enough to support the High-Speed Rail/Intercity Passenger Rail development efforts of each State—whether, for example, the State has just initiated High-Speed Rail/Intercity Passenger Rail planning, or has prepared for capital investments to enhance existing services, or has readied itself to construct new infrastructure to accommodate new High-Speed Rail/Intercity Passenger Rail service. With such disparate situations among the States, the Federal funding approach must accommodate different situations, offering an array of possibilities to dovetail with the States' diverse aspirations, capabilities, and resources.

1.5 Environmental Review and Approval

Central to High-Speed Rail/Intercity Passenger Rail Program implementation—and crucial to each applicant's choice of Track for a proposal—is the environmental review process required by the National Environmental Policy Act (NEPA) and related laws and regulations.[2] NEPA applies to all federal grant programs and requires Federal agencies to integrate environmental values into their decision-making processes by considering the environmental impacts of their proposed actions and reasonable alternatives to those actions. Agencies must also make information on these impacts and alternatives publicly available before decisions are made and actions occur. NEPA also mandates that all reasonable alternatives be considered, and to that end, an alternatives analysis is typically conducted during the environmental review process.

FRA—as the Federal sponsoring agency—has primary responsibility for assuring NEPA compliance while accomplishing the purposes, priorities, and requirements of the HSIPR Program. While NEPA compliance is a Federal agency responsibility and the ultimate decisions remain with the Federal sponsoring agency, FRA encourages applicants to take a leadership role in NEPA documentation development, consistent with existing law and regulations. In the varied and flexible HSIPR Program, with its four Tracks and multiple authorizations, no single approach to NEPA compliance will work for every proposal and applicant. Therefore, FRA will work closely with applicants to assist in the timely and effective completion of the NEPA process in the manner most pertinent to the applicant's proposal.

NEPA reviews should focus on the issues that are ripe for decision at each stage of project or program development. To help focus environmental reviews, the Council on Environmental Quality encourages agencies to tier their environmental reviews, whereby general matters or broader programs are covered in a Tier I NEPA document, such as a corridor-wide (or ''service'') environmental impact statement (EIS) or environmental assessment (EA); and narrower more site-specific projects or actions are addressed in site-specific EISs, EAs or categorical exclusion (CE) documents.

1.6 Funding Approach

In order to accommodate the variety of potential applicant goals and stages of

[2] The National Historic Preservation Act, Clean Water Act, 49 U.S.C. 303 relating to parks, wildlife refuges and historic sites (commonly referred to as Section 4(f)), and the Endangered Species Act are examples.

project development, while meeting the statutory and program constraints, this guidance provides four funding ''tracks'' in which applications may be submitted. FRA has adopted this four-Track approach to aid in near-term economic recovery efforts and to establish the path to realize a fully-developed national High-Speed Rail/Intercity Passenger Rail network. The deadlines for FRA obligation and project(s) completion for each Track reflect the imperatives of ARRA, balanced with the longer-term development goals. (*See* **DATES** above.)

1.6.1 Track 1—Intercity Passenger Rail Projects Funded Under ARRA (''Track 1—Projects'')

This track is aimed at chiefly addressing the economic recovery goals of ARRA through—(a) FD/construction of ''ready-to-go'' projects—*i.e.,* those with completed site-specific NEPA documentation (project-level final EIS, final EA or CE documentation) along with PE; and (b) completion of project-level NEPA and PE to prepare projects for FD/construction grants that may be available under future solicitations. Track 1 projects should be completed within two years of award. These projects are funded through either Section 301 (Intercity Passenger Rail Corridor Capital Assistance) or Section 302 (Congestion Grants) of PRIIA, for the benefit of existing services, including those that support development of High-Speed Rail. Eligible projects include infrastructure, facilities, and equipment, and must have independent utility.[3] The Federal funding share can be up to 100 percent, although evaluation criteria favor projects that leverage federal funding with non-federal investments.

1.6.2 Track 2—High-Speed Rail/Intercity Passenger Rail Service Development Programs (''Track 2—Programs'')

This track is aimed at developing new High-Speed Rail corridor and Intercity Passenger Rail services, or substantial upgrades to existing corridor services, eligible under Section 501 (High-Speed Rail Corridor Development) and Section 301 (Intercity Passenger Rail Corridor Capital Assistance) of PRIIA. It is intended to fund development of a set of inter-related projects that constitute the entirety or a distinct phase (or geographic section) of a long-range service development plan—projects which collectively produce benefits greater than the sum of each individual project.[4] Under this Track, not all projects need to be ready-to-go; the Federal Government provides a commitment to fund the entire program, generally through a Letter of Intent (LOI), and obligates funds for FD/construction projects through cooperative agreements as soon as they are deemed ready-to-go. Track 2 LOIs and cooperative agreements must include specific milestone deadlines for completion of environmental, engineering, design and other work.

To be eligible for awards under Track 2, Service Development Programs (''SDP''—defined in Section 2.2) must include completed: (a) A corridor-wide ''service'' NEPA study, such as a programmatic or Tier I EIS; and (b) a High-Speed Rail/Intercity Passenger Rail SDP, or an equivalent approach that provides a business and investment justification with sufficient project cost and benefit estimates. Key elements of an SDP or equivalent business case include: (i) An overview of program rationale (including purpose and need); (ii) a service and operations plan, and a prioritized capital investment plan for infrastructure, fleet and stations/facilities; and (iii) an implementation approach, including schedule, project management plan, stakeholder agreements, and a financial plan for funding both capital and operations. See Appendix 2.1 for a summary of expectations for a SDP.

Track 2 programs will generally address infrastructure, equipment and stations/facilities investments in a comprehensive fashion. While these programs are the most complicated and need a particularly rigorous project management approach, Track 2 programs represent the long-term emphasis of the HSIPR Program, and thus FRA expects to focus its collaborative efforts on this Track. The Federal funding share can be up to 100 percent, although evaluation criteria favor projects that leverage federal funding with non-federal investments.

1.6.3 Track 3—Service Planning Activities funded under the FY 2009 and FY 2008 DOT Appropriations Acts (''Track 3—Planning'')

This track is aimed at helping establish a pipeline of future High-Speed Rail/Intercity Passenger Rail projects and service development programs by advancing planning activities for applicants at an earlier stage of the development process. Under Track 3, FRA will enter into cooperative agreements for preparation of SDPs, State Rail Plans and service-level environmental documents.[5] This Track provides States an opportunity to complete the prerequisite work needed to submit applications under Tracks 1 and 2, so that applicants may be ready for potential future solicitations. Under the terms of the FY 2008/2009 DOT Appropriations acts, planning activities funded under this Track require a 50 percent non-Federal match.

1.6.4 Track 4—FY2009 Appropriations-Funded Projects (''Track 4—FY2009 Appropriations Projects'')[6]

Track 4 provides an alternative for projects that would otherwise fit under Track 1, but for State applicants offering at least a 50 percent non-Federal share of financing. This Track offers applicants simplified grant agreement terms, and up to five years to complete projects (vs. two years under Track 1). Applicants providing at least a 50-percent project match are strongly encouraged to submit project applications under Track 4 (those submitting project application(s) under Track 4 may also request concurrent consideration of such application(s) under Track 1).

1.7 Opportunity for Public Comment

FRA is soliciting public comment on this document through Docket Number FRA–2009–0045 (at *http://www.regulations.gov*). While the interim guidance in this document does not constitute a rulemaking, FRA will consider all comments received no later than July 10, 2009 and will publish any resultant clarifications or revisions to

[3] While ARRA-funded projects are exempt from State Rail Plan requirements, evaluation preference is given to those that are part of a planning process that includes a prioritized list of capital projects supporting a corridor service development plan; equipment projects should be consistent with Section 305 of PRIIA, which calls for the establishment of a standardized next-generation rail corridor equipment pool (*see* Section 3.6.3).

[4] A group of projects that collectively advance the entirety, or a ''phase'' or ''geographic section,'' of a corridor service development plan are referred to here as a ''program.''

[5] Project-level NEPA documents are eligible for funding under Tracks 1 and 2.

[6] A total of $90 million was appropriated under the FY 2009 DOT Appropriations Act under the heading of Capital Assistance to States—Intercity Passenger Service, of which no more than ten percent, or $9 million, may be made available for planning activities. In addition, a total of $540,500 in planning funding, and at least $1,352,573 in FD/construction funding also remained available until expended following the award of grants under the FY 2008 Capital Assistance to States—Intercity Passenger Service program.

this document in the **Federal Register** and on FRA's Web site (*http://www.fra.dot.gov*). FRA began this comment process during its outreach sessions in May and June, in which over 1,100 stakeholders attended seven sessions around the country; in addition, a public docket was established for comment, and 110 comments were received as of June 15, 2009. FRA has already revised the approach contained herein based on this initial feedback. To give prospective applicants adequate time to complete their applications (while incorporating any guidance clarifications or revisions), FRA may adjust application dates to allow for a minimum of 30 days for application submission following any material changes to this guidance that arise from comments.

Section 2: Award Information

2.1 General Award Information

ARRA appropriated a total of $8 billion under three Intercity Passenger Rail capital investment programs authorized by the PRIIA: Section 501 (High-Speed Rail Corridor Development), Section 301 (Intercity Passenger Rail Service Corridor Capital Assistance), and Section 302 (Congestion Grants). ARRA left the mix of funding among the three PRIIA programs to the discretion of the Secretary of Transportation. As described in the Department's April 2009 strategic plan for high-speed rail, *Vision for High-Speed Rail in America,* FRA will not allocate funding among the three PRIIA programs in advance, but will cumulate the amounts under each PRIIA section from the funding sources identified in the selected applications, subject to the overall $8 billion ARRA limit. In addition to the ARRA appropriation for High-Speed Rail/Intercity Passenger Rail, this funding opportunity announcement also solicits applications for up to $9,540,500 for Intercity Passenger Rail planning activities, and at least $82,352,573 in FD/construction funding appropriated under the FY 2008/2009 DOT Appropriations Acts.[7]

This funding and announcement solicits applications for funding appropriated through ARRA, the FY 2008/2009 DOT Appropriations Acts under the four distinct Tracks described above:

- Track 1—Projects (ARRA funds);
- Track 2—Programs (ARRA funds);
- Track 3—Planning (annual appropriations funds for Interstate Passenger Rail planning from FY 2009 and remaining from FY 2008); and
- Track 4—FY2009 Appropriations Projects (annual appropriations funds for Interstate Passenger Rail non-planning from FY 2009 and remaining from FY 2008).

FRA anticipates making multiple awards under each of the four Tracks. While the entire $9,540,500 under Track 3 and at least $82,352,573 under Track 4 may be awarded, FRA may choose not to award through this solicitation the full amount available for Tracks 1 and 2, to allow for potential future rounds of solicitations and awards which occur after 2009. There is no predetermined allocation between Tracks 1 and 2 or between this and any future solicitations; all such distributions will cumulatively reflect the nature and timing of the selected applications (as referenced in Section 5, selection criteria).

2.2 Definitions of Key Terms, Concepts, and Milestones for Track Selection

A prospective applicant under this solicitation should first determine into which Track the applicant's proposal would most appropriately fit. The choice of Track largely reflects the scope of the proposed undertaking and the proposed effort's achievement of key milestones within the project development process. Below are definitions of key terms, concepts, and milestones for the HSIPR Program that affect the selection of a Track. Section 2.3 is then intended to assist an applicant in selecting a Track based on the proposed investment's relationship to these terms, concepts, and milestones.

Corridor—For the specific purposes of the HSIPR Program, a corridor is an existing or proposed Intercity Passenger Rail route of approximately 100–600 miles in total length, linking population centers at its endpoints and typically points in between. Corridors may cross State or national boundaries and thus require a regional, multi-jurisdictional approach to planning and development.[8]

Final Design—The last phase of project development, including: right-of-way acquisition, utility relocation, the preparation of final design plans, construction management plans, system safety plans for construction management & operations, safety certification, any required collision hazard analysis, final construction cost estimates, and detailed specifications, as well as procurement of construction services and equipment. During this phase, any remaining uncertainties or risks associated with minor changes to design scope and the procurement processes are fully addressed, and plans for financing the project or program would be updated and refined to reflect accurately the expected year-of-expenditure costs and cash flow projections.

Financial Plan—The financial plan documents the recent and forecasted financial condition of the applicant agency and other key partners that will provide capital or operating funding for project development and/or implementation. The Financial Plan describes the current financial health of the aforementioned agencies, documents projected capital and operating costs and revenues, and details key assumptions and methodologies. A financial plan also details the sources, reliability and feasibility of funding for both capital and operating expenses and provides an overview of the project sponsor's strategies to address potential project cost increases.

FRA Obligation—Commitment of Federal funding made through execution of a grant agreement or cooperative agreement.

High-Speed Rail—Intercity Passenger Rail service that ''is reasonably expected to reach speeds of at least 110 mph'' (49 U.S.C. 26106(b)(4)).

Independent Utility—A project, group of projects, or Service Development Program (or phase of a Service Development Program) is considered to have independent utility if it will result, upon completion, in the creation of new or substantially improved High-Speed Rail/Intercity Passenger Rail service, and will provide tangible and measurable benefits even if no additional investments in the same High-Speed Rail/Intercity Passenger Rail service are made. Typical examples of these benefits would include on-time performance improvements, travel-time reductions, and higher service frequencies resulting in increased ridership.

Intercity Passenger Rail—Defined in statue as ''rail passenger transportation except commuter rail passenger transportation'' (49 U.S.C. 24102(4)); it subsumes both High-Speed Rail and conventional intercity passenger

[7] A total of $90 million was appropriated under the FY 2009 DOT Appropriations Act to remain available and unexpended under the heading of Capital Assistance to States—Intercity Passenger Service, of which no more than 10 percent, or $9 million, may be made available for planning activities. In addition, a total of $540,500 in planning funding, and at least $1,352,573 in FD/construction funding also remained available until expended following the award of grants under the FY 2008 Capital Assistance to States—Intercity Passenger Service program.

[8] Federal investment in corridor projects may be limited to the United States.

services. Commuter rail is defined at as ''short-haul rail passenger transportation in metropolitan and suburban areas usually having reduced fare, multiple ride, and commuter tickets and morning and evening peak period operations'' (49 U.S.C. 24102(3)); Federal funding for commuter rail projects is available from Federal Transit Administration programs.

Intercity Passenger Rail Service—An Intercity Passenger Rail service consists of a group of one or more scheduled trains (roundtrips) that provide Intercity Passenger Rail transportation between bona fide travel markets (not constrained by State or jurisdictional boundaries), generally with similar quality and level-of-service specifications, within a common (but not necessarily exclusive or identical) set of identifiable geographic markets. An Intercity Passenger Rail service is considered ''*substantially changed*'' when its inherent nature or market focus is altered, or when its operating frequencies (roundtrips per day) are increased significantly; a substantial change in service may include adding short-distance corridor-type trains where only long-distance service operates, or service restoration where trains ceased to operate several years before. See Appendix 1.3 for further discussion of the definition of Intercity Passenger Rail.

Letter of Intent (LOI)—Represents a contingent financial commitment by FRA to provide up to a prescribed amount of funding to fully implement a service development program (or specific phases of such a program), with defined milestones for completion of work necessary to ensure successful and timely program development.

National Environmental Policy Act (NEPA) Documentation—Includes four principal levels (with respect to the HSIPR Program):

- Tier I, ''programmatic,'' or service-level environmental impact statement (Tier I EIS)—Addresses actions at a broad level, such as a program concept for an entire corridor, and typically does not lead directly to project construction.
- Site-specific, or project EIS—Addresses specific environmental issues associated with a site or project, and is intended to lead directly to construction once applicable permits are secured.
- Environmental assessment (EA)—May be programmatic or site-specific, and concisely provides sufficient evidence and analysis of the proposal to determine whether to prepare an EIS or a finding of no significant impact (FONSI).
- Categorical exclusion (CE)—Documentation that shows how a proposal fits a category of predefined actions which do not individually or cumulatively have a significant effect on the human environment and for which neither an EIS nor an environmental assessment are required.

Planning—Activities that support the case for investing in project(s) or program(s), such as: identification of purpose and need; analysis comparing the costs, benefits, and impacts of a range of transportation alternatives; studies that assess different levels of rail service and investment; service-level, programmatic, or Tier I NEPA studies; Service Development Plans; and State Rail Plans.

Preliminary Engineering (PE)—Sufficient engineering design to define a project, including identification of all environmental impacts, design of all critical project elements at a level sufficient to assure reliable cost estimates and schedules (in turn sufficient to complete project management and financial plans), and definition of procurement requirements and strategies. The PE development process starts with specific project design alternatives that allow for assessment of a range of rail improvements, specific alignments, and project designs—sufficient to support subsequent NEPA analysis. PE is prerequisite to final design (FD) and construction. Appendix 2.2 contains additional information about PE.

Project—A High-Speed Rail/Intercity Passenger Rail project is a discrete action that has a distinct purpose, such as adding track to an existing railroad line, or the purchase of one or more pieces of rolling stock.

Project Management Plan—Approach for ensuring successful implementation of a project or program, including: (i) Identification of a manager accountable for project or program delivery; (ii) an organization/resource plan that describes (*e.g.,* through an organization chart) the relationships among entities involved in the proposed program and a description of the relationships among the entities responsible for the financing, design, construction, operation, and maintenance of the proposed program; (iii) any new legal entities required, how they would be structured, and their relationship to existing entities; (iv) stakeholder agreements with owners of right-of-way, operators, or other entities critical to successful project/program delivery;(v) required governmental actions and approvals; and, (vi) an appropriate system safety plan for the entire project lifecycle consistent with FTA guidance for safety and security management plans. The project management plan should address the safety certification process and any required collision hazard analysis consistent with the FRA guidance. A project management plan generally should also include metrics by which the success of the project is defined.

Right-of-Way—Railroad infrastructure within the property lines of an existing, or within the presumed property lines of a proposed, railroad useful for Intercity Passenger Rail service.

Service Development Plan (SDP)—A plan for developing High-Speed Rail/Intercity Passenger Rail service, either initiating new service or improving existing service (e.g., adding train frequencies and/or reducing trip times)—typically developed around distinct phases and/or geographic sections of service improvement. A High-Speed Rail/Intercity Passenger Rail SDP or equivalent covers three general topics: (i) Rationale (including purpose and need), (ii) service/operating plan and prioritized capital plan, and (iii) implementation plan (including project management approach, stakeholder agreements and financial plan). The precise structure of an SDP can vary, but these elements must be covered in some fashion. (See Appendix 2.1 for additional explanation).

Service Development Program (''Program'')—Implementation of a High-Speed Rail/Intercity Passenger Rail SDP, generally broken into discrete phases or geographic sections. Such programs may be for new service on an existing or new railroad alignment, or for improved service on an existing railroad alignment.

2.3 Guide to Track Selection

The table below should be used by applicants as a guide for determining the appropriate Track for application submissions.

TRACK SELECTION GUIDE

Funding track determination questions	Response (yes/no)	Funding track
Has new or improved Intercity Passenger Rail service been selected as a promising alternative in the transportation corridor where the project is located?	No	Track 3—Service Planning.
	Yes	Proceed to Next Question.
Does the project(s) lead to—introduction of High-Speed Rail/Intercity Passenger Rail service within a corridor where no service of that type currently exists, or to a substantial change in an existing service?	No	Proceed to Next Question.
	Yes	Track 2—Programs.
Does the project(s) include the rerouting of an existing Intercity Passenger Rail service onto a new, expanded, or previously abandoned right-of-way?	No	Proceed to Next Question.
	Yes	Track 2—Programs.
Does the investment encompass multiple dispersed projects intended to produce a significant benefit to one or more Intercity Passenger Rail services?	No	Proceed to Next Question.
	Yes	Track 2—Programs.
Even if no Service Development Plan exists, have specific Intercity Passenger Rail investment projects been identified for implementation?	No	Track 3—Service Planning.
	Yes	Proceed to Next Question.
Have preliminary engineering (PE) and a project-level NEPA document been completed for the proposed project?	No	Track 1—PE/NEPA only.
	Yes	Proceed to Next Question.
If PE and project-level NEPA documentation is complete, is a 50 percent (or greater) non-Federal match available?	No	Track 1—FD/Construction.
	Yes	Track 4—FY 2008/2009 Appropriations Projects (or Track 1—Projects).

After selecting the appropriate application Track, prospective applicants should consult the relevant Track-specific and general information contained in the balance of this document.

2.4 Anticipated Award Amounts

Tracks 1 and 2—Awards under Tracks 1 and 2 will be made using a portion of the $8 billion appropriated through ARRA. FRA anticipates making multiple awards under Track 1 as a result of this solicitation; however, FRA will not award all of the available $8 billion to Track 1 applicants. Funds will be reserved for award to Track 2 applications under this solicitation, and likely to Tracks 1 and 2 in potential future rounds of solicitations—as described in Section 5. As the authorizations underlying Tracks 1 and 2 are new, the FRA cannot provide an average amount of funding per award in previous years.

Tracks 3 and 4—Awards under Tracks 3 and 4 will be made using the $90 million dedicated to Capital Grants to States—Intercity Passenger Rail Service in the FY 2009 DOT Appropriations Act, plus the remaining funds appropriated for the same purpose in the Capital Assistance to States—Intercity Passenger Service Program in the FY 2008 DOT Appropriations Act (currently estimated at $1,893,073). In accordance with the provisions of the Appropriations Acts, no more than 10 percent of appropriated amounts in each fiscal year ($9,540,500 of the available funds) may be allocated to Track 3—Planning, with the balance available for Track 4—FY2009 Appropriations Projects. These funds require a non-Federal match of at least 50 percent of total project cost.

2.5 Types of Awards

The table below summarizes the characteristics of funding awards by Track. For specific grant conditions, refer to section 6 and appendix 3.

AWARD CHARACTERISTICS

	Track 1—projects	Track 2—programs	Track 3—planning	Track 4—FY 2009 appropriations projects
Legislative Funding Source	• ARRA	• ARRA	• FY 2009, 2008 DOT Appropriations Act.	• FY 2009, 2008 DOT Appropriations Act.
Available Funding	• Portion of $8 B	• Portion of $8 B	• Up to $9.54 M	• No less than $82.3 M.
Instrument of Commitment	• Final Design/Construction Grants. • PE/NEPA Cooperative Agreements	• Letters of Intent • Cooperative Agreements	• Cooperative Agreements	• Final Design/Construction Grants.
Match Requirement	• Up to 100% Federal share.	• Up to 100% Federal share.	• At least 50% non-Federal match.	• At least 50% non-Federal match.

2.5.1 Track 1

The FRA will make awards under Track 1 through either: (a) Grant agreements supporting FD and project construction; or (b) cooperative agreements for completion of PE and/or project-level NEPA documentation. Construction grants will fund both FD (if not already completed) and construction of projects for which PE and project-level NEPA documentation is complete at the time of application.[9] FD/construction grant recipients will be required to obtain FRA approval prior to the commencement of construction activities (the process will be set out in the grant agreement). The grant agreement can also be structured to cover alternative construction scenarios, such as through a design-build type approach. Applicants under Track 1 will be considered for funding under either Intercity Passenger Rail Corridor Capital Assistance Grants (Section 301 of PRIIA), or Congestion Grants (Section 302 of PRIIA). Eligible projects intended to reduce congestion by alleviating major rail capacity bottlenecks, particularly those that benefit multiple railroad operators (*e.g.* Intercity Passenger Rail, rail freight, and commuter rail) in a congested corridor, will likely be considered for funding under the Congestion Grant program. Note that where multiple railroad operations benefit from project(s), FRA will expect the costs for such project(s) to be shared proportional to the benefit each operator accrues from the investment.

Under Track PE/NEPA cooperative agreements, FRA will be more involved in the project through collaborative work with the recipient. In addition to providing technical assistance to the recipient, FRA will participate in key project meetings, and will assist in the preparation of engineering and environmental documents. FRA will also be responsible for approving project deliverables at key milestones, and providing authorization for progressing with subsequent stages of the project.

2.5.2 Track 2

Under Track 2, FRA may issue Letters of Intent (LOI) for Service Development Programs, and make subsequent awards for program components through cooperative agreements.

The issuance of a LOI represents the expression of FRA's full support of a Service Development Program, and the funding contingently committed through an LOI will be reserved for that Service Development Program from the $8 billion in available ARRA funding. An LOI will include milestones for completion of work needed to advance the program into obligation and completion; if milestone deadlines are not met, funding reserved under an LOI will be returned to the pool of funds available for future solicitations.

As milestones under an LOI are reached, FRA will obligate funding to implement approved portions of the program through a cooperative agreement. Funding to complete remaining PE and project-level NEPA would be awarded immediately following the issuance of the LOI. Funding for FD/construction would be awarded through a grant or cooperative agreement as milestones are reached (*e.g.,* completion of PE and NEPA for project(s) with independent utility. Even after funds are converted from LOI into a cooperative/grant agreement (*i.e.,* obligated), grantees will be required to obtain FRA approval prior to the commencement of construction activities. This process will be included in the grant agreement (which could also be structured to address options such as a design-build implementation approach).

Recognizing the unique challenges posed by complex new corridor programs, a higher level of Federal oversight and support will be involved than under standard grant agreements. The substantial Federal involvement of FRA will extend across all aspects of Service Development Programs and will include technical assistance, review of interim work products, support for environmental reviews, review of PE and FD, and continuous program oversight.

2.5.3 Track 3

FRA will make awards under Track 3 using the $9,540,500 available under the FY 2008/2009 DOT Appropriations Acts through cooperative agreements. The substantial Federal involvement for Intercity Passenger Rail planning activities would include agreement on the scope of study, review of draft studies, and acceptance of final deliverables. Recognizing the importance of planning to the long-term success of the HSIPR Program and the limited funding available under existing appropriations, FRA will favorably consider applicant expenditures for High-Speed Rail/Intercity Passenger Rail project planning when evaluating the State share or matching contributions component of an evaluation under subsequent solicitations.

2.5.4 Track 4

Awards under Track 4 will be made using $82 million available under the FY 2009 DOT Appropriations Act for non-planning Intercity Passenger Rail Capital Assistance to States, as well as remaining non-planning funding under the analogous FY 2008 DOT Appropriations Act funding. FRA anticipates making one or more awards, and awarding the entire $82 million under Track 4 as a result of this solicitation.

Funding under Track 4 cannot exceed 50 percent of a project's total cost. States are the only eligible applicants under Track 4, and must be able to certify in their applications as to the availability of the matching funds. As the source of the Federal funds is a regular annual appropriation rather than ARRA, requirements specific to ARRA (e.g., job retention and creation as an evaluation factor, and various reporting requirements) need not be met, although States are encouraged to do so.

The average amount of Federal funding per non-planning award in the analogous FY 2008 program was $2.75 million.

Section 3: Eligibility Information

Applications will be required to meet minimum requirements for each Track in terms of applicant eligibility, project eligibility, and the fulfillment of other Track-specific application prerequisites.

To the extent that an application's substance exceeds the minimum eligibility requirements described below, such qualifications will be considered in evaluating the merits of an application.

3.1 Eligible Applicant Types

Eligibility of different types of applicants varies by Track and authorization, as summarized below.

[9] If substantial progress on NEPA documentation has been made on NEPA documentation, application may be reviewed for FD/Construction grant funding; in any case, project-level NEPA documentation must be complete at time of grant agreement.

APPLICANT ELIGIBILITY

	Track 1—projects		Track 2—programs		Track 3—planning	Track 4—FY 2008/2009 Appropriations projects
	PRIIA Section 301	PRIIA Section 302	PRIIA Section 301	PRIIA Section 501	FY2008/2009 Appropriations acts	FY2008/2009 Appropriations acts
States	✓	✓	✓	✓	✓	✓
Groups of States	✓	.....	✓	✓	.....	.....
Interstate Compacts	✓	.....	✓	✓	.....	.....
Public agencies established by one or more States and having responsibility for providing Intercity Passenger Rail service	✓	.....	✓	.....	.....	.....
Public agencies established by one or more States and having responsibility for providing High-speed Passenger Rail service	.....	.....	.....	✓	.....	.....
Amtrak	✓ *	✓ **	.....	✓	.....	.....

* Amtrak may enter into a cooperative agreement with one or more States to carry out an eligible project
** Amtrak is eligible in cooperation with States.

Further detail on the definitions of ''eligible applicants'' is available in Appendix 3 under ''Applicant Types.''

3.1.1 Track 1

An entity seeking assistance under Track 1 must meet the definition of an ''applicant'' under the funding authorization that would pertain to its proposal(s)—either Section 301 (Intercity Passenger Rail Corridor Capital Assistance) or Section 302 (Congestion Grants) of PRIIA. Eligible applicant entities under those sections are as follows:

• Intercity Passenger Rail Corridor Capital Assistance (Section 301)—States (including the District of Columbia), groups of States, Interstate Compacts, and public agencies established by one or more States and having responsibility for providing intercity passenger rail service.

• Congestion Grants (Section 302)—States (including the District of Columbia), or Amtrak (in cooperation with States).

3.1.2 Track 2

An entity seeking assistance under Track 2 must meet the definition of an ''applicant'' under the funding authorization that would pertain to its proposal(s)—either Section 301 (Intercity Passenger Rail Corridor Capital Assistance) or Section 501 (High-Speed Rail Corridor Development) of PRIIA. Eligible applicant entities under those sections are as follows:

• Intercity Passenger Rail Corridor Capital Assistance (Section 301)—States (including the District of Columbia), groups of States, interstate compacts, and public agencies established by one or more States and having responsibility for providing Intercity Passenger Rail service.

• High-Speed Rail Corridor Development (Section 501)—States (including the District of Columbia), groups of States, interstate compacts, and public agencies established by one or more States and having responsibility for providing High-Speed Rail service, or Amtrak.

3.1.3 Tracks 3 and 4

Only States, including District of Columbia, are eligible to apply under Tracks 3 and 4.

3.2 Applicant and Key Partner Qualifications

For an application submitted by an eligible entity to be considered under any Track, it must affirmatively demonstrate that the applicant has or will have the legal, financial, and technical capacity to carry out the proposal. In addition, for FD/construction applications under Tracks 1, 2, and 4, the applicant must demonstrate that it has or will have satisfactory continuing control over the use of equipment or facilities acquired, constructed, or improved by the project, and the capability and willingness to maintain such equipment or facilities. Further discussion of how applicants can demonstrate compliance with these minimum qualifications appears in Appendix 1.2.

Entities other than States must submit information and documentation demonstrating the fulfillment of the minimum applicant qualifications described in this section as part of a preapplication (see Section 4.3. for complete preapplication information and documentation requirements). On the basis of such information, FRA will issue a written decision on the entity's eligibility as an applicant.

3.3 Cost Sharing and Matching

3.3.1 Treatment of Applicant Cost Sharing

3.3.1.1 Track 1

Pursuant to the provisions of the ARRA appropriation for High-Speed Rail/Intercity Passenger Rail, the Federal share of the costs of projects issued grants under Track 1 of this solicitation will be, at the option of the recipient, up to 100 percent.

The evaluation criteria provide preference to applicants, should the applicant choose the option of leveraging federal funds with contributions from its own project partners' resources toward the costs of its proposed project. These contributions may be considered in evaluating the merit of its application (See section 5 for a complete description of evaluation and selection criteria).

3.3.1.2 Track 2

As in the case for Track 1, the Federal share of the costs of projects issued grants under Track 2 of this solicitation shall be, at the option of the recipient, up to 100 percent.

Again, the evaluation criteria provide preference to applicants that leverage federal funding with non-Federal investment. Applicants for Service Development Programs who do not choose to contribute their own or their project partners' resources toward the costs of the proposed project, and who (i) have not demonstrated continuous, sustained support to the proposed program, and (ii) do not have a demonstrable history of capital investment in intercity passenger rail, may, as a condition of the obligation of

funding for FD/construction activities, be required to establish a Capital Reserve Account funded by their own dedicated financial resources. Funds deposited by recipients into a Capital Reserve Account would be used to pay for any project cost overruns.

3.3.1.3 Tracks 3 and 4

Pursuant to the provisions of the FY 2008/2009 DOT Appropriations Acts, the Federal share of the costs of projects issued grants under Tracks 3 and 4 of this solicitation may not exceed 50 percent.

If an applicant chooses the option of contributing, from its own or its partner project stakeholders' resources, more than 50 percent of the costs of its proposed project, such additional contributions will be considered in evaluating the merit of its application (See Section 5 for a complete description of evaluation and selection criteria).

3.3.2 Requirements for Applicant Cost Sharing

Whether optional (under Tracks 1 and 2) or mandatory (under Tracks 3 and 4), an applicant's contribution toward the cost of its proposed project may be in the form of cash or, with FRA approval, in-kind contributions of services, supplies, equipment, or real estate. As part of its application, an applicant offering an in-kind contribution must provide a documented estimate of the monetary value of any such contribution, and its eligibility under 49 CFR 18.24.

The applicant must provide as part of its application documentation that demonstrates that it has committed and will be able to fulfill any pledged contribution, including committing any required financial resources that are budgeted or planned at the time the application is submitted. Furthermore, any applicant under Tracks 1 and 2 who seeks to contribute toward its proposed project funds from another Federal financial assistance program that itself requires a match, should be aware of the prohibition in many such programs of using any Federal funding (such as that being applied for under this program) as a matching share (*See* 49 CFR 18.24(b)(3)). Funds from other Federal financial assistance programs may not be used to satisfy the 50 percent match requirement under Tracks 3 and 4.

3.4 Grantee Responsibility for Project Delivery, Cost Overruns, and Contributions Due From States under PRIIA Section 209

All applicants will be required to demonstrate the ability to:

- Absorb any cost overruns and deliver the proposed project with no Federal funding or financial assistance beyond that provided in grant or cooperative agreement; and
- Cover all future cash needs associated with the service benefiting from the proposed program/project and allocated to States as a result of the costing methodology to be developed under Section 209 of the PRIIA.

3.5 Eligible Projects

3.5.1 Track 1

Track 1 consists of two sub-Tracks: Track 1 FD/construction and Track 1 PE/NEPA work in support of construction projects. To be eligible under either Track 1 FD/construction or Track 1 PE/NEPA a project for which construction or PE/NEPA funding is sought must be eligible under Section 301 (Intercity Passenger Rail Corridor Capital Assistance) and/or Section 302 (Congestion Grants) of PRIIA.

3.5.1.1 Intercity Passenger Rail Corridor Capital Assistance (PRIIA Section 301) Eligible Projects

Eligible projects for Intercity Passenger Rail Corridor Capital Assistance funding under Track 1 include:

- Acquiring, constructing, improving, or inspecting equipment, track and track structures, or a facility for use in or for the primary benefit of Intercity Passenger Rail service, including High-Speed Rail; expenses incidental to the acquisition or construction (including designing, engineering, location surveying, mapping, inspecting, environmental studies, and acquiring rights-of-way); payments for the capital portions of rail trackage rights agreements; highway-rail grade crossing improvements related to Intercity Passenger Rail service; mitigating environmental impacts; communication and signalization improvements; and relocation assistance, acquiring replacement housing sites, and acquiring, constructing, relocating, and rehabilitating replacement housing;
- Rehabilitating, remanufacturing, or overhauling rail rolling stock and facilities used primarily in Intercity Passenger Rail service; and
- Projects to provide access to Intercity Passenger Rail service rolling stock for nonmotorized transportation, including bicycles and recreational equipment, and to provide storage capacity in intercity passenger trains for such transportation, equipment, and other luggage, to ensure passenger safety.

3.5.1.2 Congestion Grants (PRIIA Section 302) Eligible Projects

Eligible projects for Congestion Grants funding under Track 1 include facilities, infrastructure, and equipment for high-priority rail corridor projects necessary to reduce congestion or facilitate ridership growth in Intercity Passenger Rail transportation, including High-Speed Rail, as mandated in PRIIA Section 302.

To be eligible for Congestion Grant program funding in Track 1, an applicant must demonstrate that the proposed project:

- Has been identified by Amtrak as necessary to reduce congestion or facilitate ridership growth in Intercity Passenger Rail transportation along heavily traveled rail corridors; or
- Is sufficiently advanced to fulfill the PRIIA Section 302 purposes on an expedited schedule.

Applicants should give particular consideration to applying for Congestion Grants funding under circumstances in which the proposed project meets the eligibility requirements described above and:

- Is anticipated to result in significant joint benefits for multiple railroad operators (*e.g.,* Intercity Passenger Rail, rail freight, and commuter rail) in a congested corridor, with proportional cost sharing among the operators;
- Involves the construction or improvement of infrastructure that will significantly benefit, but which will not be directly used by, Intercity Passenger Rail service (*e.g.,* freight bypasses); and/or
- Will benefit service within one State, but will be physically located within another State—under such circumstances, the benefiting State may choose to cooperate with Amtrak or through a regional compact to put forward an application for the proposed project.

3.5.2 Track 2

Service Development Programs and phases of such programs, that are applied for under Track 2 must consist of a coordinated and comprehensive grouping of projects intended to result in the introduction of new services or significant improvements to existing services that are eligible under PRIIA Section 301 and/or Section 501.

3.5.2.1 Intercity Passenger Rail Corridor Capital Assistance (PRIIA Section 301)

Eligible Projects

These are listed under Track 1, above.

3.5.2.2 High-Speed Rail Corridor Development (PRIIA Section 501 Eligible Projects)

Eligible projects for High-Speed Rail Corridor funding under Track 2 include:

• Acquiring, constructing, improving or inspecting equipment, track and track structures, or a facility for use in or for the primary benefit of High-Speed Rail service; expenses incidental to the acquisition or construction (including designing, engineering, location surveying, mapping, environmental studies, and acquiring rights-of-way); payments for the capital portions of rail trackage rights agreements; highway-rail grade crossing improvements related to High-Speed Rail service; mitigating environmental impacts; communication and signalization improvements; and relocation assistance, acquiring replacement housing sites, and acquiring, constructing, relocating, and rehabilitating replacement housing. Projects must be located on a high-speed rail corridor designated by the Secretary pursuant to 23 U.S.C. 104(d)(2).

3.5.3 Track 3

Eligible planning studies are those that:

• Lead to the completion of a SDP to support future applications under Track 2—Programs;

• Identify and compare the costs, benefits, and impacts of a range of transportation alternatives, including High-Speed Rail and/or Intercity Passenger Rail, as a means of providing decision makers with the information necessary to implement appropriate transportation solutions;

• Support the preparation of environmental documents that are prerequisite to the fulfillment of Service NEPA; and

• Consist of operational analyses and simulations, and projections of future service requirements, leading to systematic and rational priority lists of projects that could be eligible for PRIIA Section 301 or 302 funding, and could ultimately contribute to SDPs.

3.5.4 Track 4

To be eligible for funding under Track 4, a proposed project must be specifically included in the applicant State's Statewide Transportation Improvement Plan (STIP) at the time of application. Eligible types of projects under Track 4 include (1) acquiring, constructing, or improving equipment, track and track structures, or a facility for use in or for the primary benefit of Intercity Passenger Rail service including High-Speed Rail service, (2) expenses incidental to the acquisition or construction (including designing, engineering, location surveying, mapping, environmental studies, and acquiring rights-of-way), (3) highway-rail grade crossing improvements related to Intercity Passenger Rail service, (4) mitigating environmental impacts, (5) communication and signalization improvements, and (6) rehabilitating, remanufacturing, or overhauling rail rolling stock and facilities used primarily in Intercity Passenger Rail service.

3.5.5 Rail Operating Expenses

In no cases are Federal funds eligible to be used for rail operating expenses.

3.6 Other Prerequisites

3.6.1 General Prerequisites

In general, proposals under all Tracks must meet the following additional prerequisites:

• Applications must be complete, as defined in this notice;

• The complete application must demonstrate that the project has been identified through a rational planning process (ideally a High-Speed Rail/Intercity Passenger Rail SDP);

• The project (except for a planning project under Track 3) must be consistent with an overall plan for developing the benefiting High-Speed Rail/Intercity Passenger Rail service; and

• The project (except for a planning project under Track 3) must result in independent utility, as defined under Section 2.2 of this notice.

3.6.2 Prerequisites for Construction Grants

If the applicant is seeking a construction grant, then the application must demonstrate all of the following:

• That PE (as defined under Section 2.2 of this notice) has been completed for the proposed project, resulting in project designs that are reasonably expected to conform to all regulatory, safety, security, and other design requirements, including those under the Americans with Disabilities Act (ADA);

• That a Project NEPA document (*e.g.,* a CE exclusion worksheet, a completed EA, or a completed final EIS, as defined under Section 2.2 of this notice) has been completed for the proposed project;

• That the applicant has reached, at a minimum, agreements in principle with key project partners, including but not limited to infrastructure-owning railroads and the railroad that operates or will operate the benefiting High-Speed Rail/Intercity Passenger Rail service, as to the scope of the proposed project and the realization of the operating benefits (*e.g.,* those reflected in changes to schedules) it is intended to generate; and

• That the applicant has developed a project management plan for managing the implementation of the proposed project, including the management and mitigation of project risks; and

• That the applicant has developed a Financial Plan—for each phase of service that details the ''sources and uses'' of both capital and operating funding.

3.6.3 Prerequisites for Equipment Procurement or Design Grants

If the applicant is seeking a grant for the procurement or design of railroad equipment, the proposed equipment should be consistent with Section 305 of PRIIA, which calls for the establishment of a standardized next-generation rail corridor equipment pool. Compliance with Section 305 of PRIIA will assist in creating the economies of scale necessary to achieve the Administration's goal, as outlined in FRA's Strategic Plan, of developing a sustainable railroad equipment manufacturing base in the United States.

3.6.4 Selection of Proposed Operator (Tracks 1 and 2 only)

If the applicant has not selected the proposed operator of the benefiting High-Speed Rail/Intercity Passenger Rail service competitively, then the application must demonstrate why the proposed operator is the best choice, taking into account all relevant quantitative and qualitative factors, and that use of the proposed operator will not needlessly increase the cost of the project or of the operations that it enables or improves.

3.6.5 Service Development Plan (Track 2 Only; Desirable for Other Tracks)

All applicants under Track 2 are required to have completed all the components of an High Speed Rail/Intercity Passenger Rail SDP, as defined in Appendix 2.1 of this guidance.

3.6.6 Positive Train Control (PTC)

If the project involves improvements to railroad signaling/control systems, then the application must demonstrate that the proposed improvements are consistent with a comprehensive plan for complying with the requirements for PTC implementation under Section 104 of the Rail Safety Improvement Act of 2008 (''RSIA,'' Division A of Pub. L. 110–432, October 16, 2008, codified at 49 U.S.C. 20147).

3.6.7 Inclusion in STIP (Tracks 3 and 4 Only)

Proposed projects must be specifically included in the applicant State's STIP at the time of application to be eligible.

3.7 Eligibility Restrictions

Pursuant to the provisions of PRIIA and ARRA, and the funding approach described in Section 1.6 of this notice, certain types of applications would be subject to various eligibility restrictions. The following table shows ineligible types of applications by Track.

ELIGIBILITY RESTRICTIONS

	Ineligible under track			
	1	2	3	4
Applications submitted by private entities other than Amtrak. Amtrak's eligibility as an applicant is restricted to PRIIA Section 302 (in cooperation with a State) and Section 501	x	x	x	x
For projects for which commuter rail passenger transportation is the primary intended beneficiary;	x	x	x	x
For projects involving the development of State Rail Plans or High-Speed Rail/Intercity Passenger Rail SDPs;	x	x		x
For projects intended to support the introduction of a new Intercity Passenger Rail service (as defined under Section 2.2 of this notice);	x			x
For projects involving significant construction of railroad infrastructure on a new (*e.g.,* greenfield, outside of existing railroad rights-of-way) or previously abandoned alignment;	x			x
For multiple discrete projects that would collectively yield a significant benefit to Intercity Passenger Rail services operating in one or more corridors. FRA will consider the magnitude of the service improvement (*e.g.,* travel-time savings and frequency increases), the total cost of the investment, and the geographic scope of the proposed projects (*e.g.,* at multiple versus contiguous sites within the corridor) in determining whether an application (or group of applications) falls within the scope of this restriction; or	x			x
For projects in which the physical improvements are located outside of the United States. However, in the case of a joint project of a State or group of States and a foreign government, in which construction of all physical improvements outside the United States will be paid for by the foreign participants, planning, PE and NEPA work applicable to both the U.S. and foreign portions of the project is eligible if funded on a proportional basis	x			x
For any expenses associated with passenger rail operating costs of rail operators	x	x	x	x

Additional restrictions are fully described in Section 4.3.8 of this notice.

Section 4: Application and Submission Information

4.1 Applying Online

FRA participates in the Grants Management Line of Business (GMLoB) E–Gov initiative. As part of that initiative, FRA uses the Administration for Children and Families' (ACF) GrantSolutions (GS) Grants Management System. All applications must be submitted to FRA through GrantSolutions. To access the system, go to *https://www.grantsolutions.gov.* If you have any problems accessing GS, please contact the Custom Applications Support and Training Unit (CAST) helpdesk at 1–800–618–0223 or *help@grantsolutions.gov.*

• Applicants must register in GS, obtain a Data Universal Number System (DUNS) number and register their organization with the Central Contractor Registration (CCR) database prior to applying in GS. Applicants should begin the process immediately to meet the application submission deadlines.

• Standard application forms (identified in Section 4.3.3.3), will be available electronically on the Funding Opportunity page at *http://www.GrantSolutions.gov.* The Funding Opportunity screen provides applicants with general announcement information and access to all application kit materials in order to view and print application forms and information. In addition, applicants can apply online through this screen.

• Program-specific preapplication and application forms (also identified in Sections 4.3 and 4.4 below) may be downloaded from FRA's Web site at *http://www.fra.dot.gov/HSR_IPR_Program.*

4.2 Address to Request Application Package

If Internet access is unavailable, please write to FRA at the following address to request a paper application:
U.S. Department of Transportation,
Federal Railroad Administration,
Attn: HSIPR Program Information (RDV–10),
Mail Stop 20,
1200 New Jersey Ave., SE.,
Washington, DC 20590.

4.3 Content and Form of Application

4.3.1 Preapplication

All prospective applicants for all Tracks must submit a preapplication in order to establish communication with FRA, and to afford FRA an opportunity to provide feedback to the prospective applicant as to the suitability of their proposed project under the Track that the applicant proposes to use. Preapplications should be submitted as early as possible, but no later than July 10, 2009, and applicants should not wait for submission of, or any comments on, a preapplication before preparing their full applications. Prospective applicants for potential future funding rounds of solicitations are not required to submit a preapplication at this time. FRA will announce any corresponding application as needed.

Preapplications consist of the following components:

• Project Description—A brief overview of the project's main features, type of proposed improvement, location, purpose, expected outcome, cost, ownership arrangements and the Intercity Passenger Rail service(s) that will benefit from the project;

• Project Development Status—The status of key project development elements, such as completion of the planning documents through which the project was identified, engineering work, and NEPA documentation; and

• Applicant Eligibility—Answers to questions regarding cost sharing, and applicant and key partners' legal, financial, and technical capacity to carry out their proposed project.

Prospective applicants that do not fall within the definition of a State will also

be required to provide copies of documentation (or references (URLs) to such documentation that is located on the Internet) that supports the answers provided in the preapplication form. Such supporting documentation should include (to the extent available), but need not be limited to, copies of laws that established the applicant as a legal entity, contractual agreements between States (either as a group of States or an interstate compact), financial statements and audit reports, and technical reports demonstrating the applicant's technical capacity and experience in carrying out projects similar to that proposed.

In an effort to focus application efforts and remedy concerns, FRA may contact potential applicants if there are any questions that arise from the information submitted in a preapplication, or if the information raises questions as to the eligibility of the proposed project or its proper classification by Track. For preapplications submitted by applicants that do not fall within the definition of a State, and for preapplications under Track 2, FRA will contact the prospective applicants to kick-off discussions for the preparation of the application.

4.3.2 Application Administrative Requirements

Prior to submitting an application, prospective applicants must have completed two administrative requirements: Establishment of a DUNS (Data Universal Numbering System) number, and registration in the Central Contractor Registration (CCR) database. These requirements need not be completed prior to submitting a preapplication, but FRA encourages applicants to begin the process immediately to meet the application submission deadlines.

All applicants must include a DUNS number in their application. Applications without a DUNS number are incomplete. A DUNS number is a unique nine-digit number recognized as the universal standard for identifying and keeping track of entities receiving Federal funds. The identifier is used for tracking purposes and to validate address and point of contact information for Federal assistance applicants, recipients and subrecipients. The DUNS number will be used throughout the grant lifecycle. Obtaining a DUNS number is a free, simple, one-time activity. Obtain a number by calling 1–866–705–5177 or by applying online at *http://fedgov.dnb.com/webform/displayHomePage.do.*

FRA also requires that all applicants (other than individuals) for Federal financial assistance maintain current registrations in the CCR database. The CCR database is the repository for standard information about Federal financial assistance applicants, recipients and subrecipients. Organizations that have previously submitted applications via *http://www.grants.gov* are already registered with CCR, as it is a requirement for www.grants.gov registration. Please note, however, that applicants must update or renew their CCR registration at least once per year to maintain an active status. Information about registration procedures can be accessed at *http://www.ccr.gov.*

4.3.3 Application Package Components

The application package for the HSIPR Program consists of three components—(1) program-specific application forms—Narrative and Templates Form—available from FRA's Web site at: *http://www.fra.dot.gov/us/content/2243,* (2) supporting documentation, and (3) standard application forms available through *http://www.GrantSolutions.gov.* Applicants must complete all three components of the application package as required by Track and listed in the section 4.2.5 application checklist; failure to do so may result in the application being removed from consideration for award. Both the standard application forms and the Narrative and Templates Form must be submitted through *http://www.GrantSolutions.gov*—with standard forms submitted directly as electronic forms, and program-specific forms submitted as attachments to the application.

4.3.3.1 Narrative and Templates Form

The most significant component of the application package is the Narrative and Templates Forms, forms into which the applicant enters specific information about the proposed project. The forms include templates that have been developed by FRA to capture pertinent qualitative and quantitative program-specific information needed for FRA to confirm applicant and project's eligibility for the HSIPR Program, and information needed for evaluation and selection of applications. These forms will be used to conduct a comprehensive benefit cost analysis. The forms allow for the applicant to make quantitative and qualitative arguments of the public return on investment. In order to conduct this analysis FRA requires specific quantitative data relating to service outputs (delay reduction, schedule improvement, or capacity increases), and transportation outputs (increases in passenger-miles traveled on Intercity Passenger Rail services, including shifts from other modes of transportation).

The information entered into the Narrative and Templates Form falls into two categories: (1) Narrative information, provided in response to specific application questions, with length limitations for each response; and (2) structured and/or quantitative information, which is entered into tables contained in the Forms. Applicants may track and submit the Narrative and Templates Forms through GrantSolutions. Separate Track-specific Narrative and Template Forms are tailored to corresponding tracks.

Information requested in the Narrative and Templates Form includes information on project overview, planning, purpose and need, project development status, project benefits—economic recovery, transportation, environmental and livable communities—project estimate/budget, applicant qualifications, stakeholder agreements and financial and operation information. Completing the FRA-developed forms is expected to facilitate information input for required OMB standard forms described in section 4.3.3.3 below.

4.3.3.2 Application Supporting Documentation

In order to provide information referenced in the Narrative and Templates Form, applicants must submit additional documentation supporting their entries on the forms and confirming their eligibility under the proposed Track. The supporting documentation should largely include information that applicants developed during project planning activities thus, the format and structure of supporting documents is at the discretion of the applicant. Supporting documentation may be provided one of three ways—(1) as attachments to the application; (2) as Internet references (URLs) to documentation that is available online; or (3) in hard copy for materials that cannot otherwise be provided (such as oversized engineering drawings). Applicants should provide any URL references for supporting documentation, along with notifications of any documentation being submitted in hard copy, in the appropriate section of the narrative and templates form. The supporting documentation includes items as specified below:

- PE Materials—Applicants should provide any documents that

demonstrate the PE status (or FD, if completed) of the proposed project. The PE requirements are detailed in Section 2.2 and Appendix 2.2. The submission of PE Materials is required for Track 1 FD/construction, Track 2 and Track 4. PE Materials should be submitted as attachments to the application in GrantSolutions. If large-format materials cannot be submitted electronically, they should be mailed to FRA as described in Section 4.3.9

• NEPA Documentation—Applicants should provide any documents that demonstrate the NEPA status of the proposed project. The NEPA requirements are defined in Appendix 3.2.9 and detailed by track in Section 1.6. The submission of NEPA documentation is required for Track 1 FD/construction, Track 2 and Track 4.

• Project Management Plan—Applicants should provide a project management plan (or equivalent) that documents assumptions and decisions regarding the communication, management processes, execution and overall project control. The project management plan shall be submitted by applicants to Tracks 1 FD/construction, Track 2 and Track 4. The form and structure of the project management plan (or equivalent) is at the discretion of the applicant.

• Stakeholder Agreements—Applicants should provide documents that demonstrate the status of all stakeholder agreements including agreements with interstate partners, host railroads, right-of-way owners and contract railroad operator providing service. The form and structure of the stakeholder agreements are at the discretion of the applicant however, agreements should satisfy the eligibility and award requirements listed in Appendix 1.1 and 1.2. Stakeholder agreements should be submitted for applicants to Track 1 FD/construction, Track 2 and Track 4.

• Financial Plan—Applicants should provide a financial plan (or equivalent) as per the description of the Financial Plan in Section 2.2. A financial plan (or equivalent) shall be submitted for applications to Track 1 FD/construction, Track 2 and Track 4.

• Service Development Plan—Applicant should provide a Service Development Plan (or equivalent) that covers three general topics regarding the underlying Service Development Program: its rationale, its operating strategy, and its path to implementation. The Service Development Plan (or equivalent) is required for Track 2 applicants only, and is described in more detail in Appendix 2.1.

• Economic Stimulus—Consistent with ARRA, the Office of Management and Budget (OMB) Updated ARRA Implementing Guidance (April 3, 2009), and Federal laws guaranteeing equal opportunity, applicants are encouraged to provide information to assist FRA in assessing (1) whether the applicant's proposal will promote the creating of job opportunities for low-income workers through the use of best practice hiring programs and apprenticeship (including pre-apprenticeship) programs; (2) whether the project will provide maximum practicable opportunities for small businesses and disadvantaged business enterprises, including veteran-owned small businesses and service disabled veteran-owned small businesses; (3) whether the project will make effective use of community-based organizations in connecting disadvantaged workers with economic opportunities; (4) whether the project will support entities that have a sound track record on labor practices and compliance with Federal laws ensuring that American workers are safe and treated fairly; and (5) whether the project implements best practices, consistent with the civil rights and equal opportunity laws, for ensuring that all individuals—regardless of race, gender, age, disability, and national origin—benefit from ARRA.

• Job Creation—Applicants should provide information indicating whether the applicant's proposal promotes the short- or long-term creation or preservation of jobs and new or expanded business opportunities during construction of the project and thereafter, including the total amount of funds that will be expended on construction and construction-related activities by all of the entities participating in the project and, to the extent measurable, the number and type of jobs to be created and/or preserved by the project during construction and thereafter, and an identification of any business enterprises to be created or benefited by the project during its construction and once it becomes operational. To the extent possible, applicants should indicate whether the populations most likely to benefit from the creation or preservation of jobs or new or expanded business opportunities are from Economically Distressed Areas. In addition, to the extent possible, applicants should indicate whether the project's procurement plan is likely to create follow-on jobs and economic stimulus for manufacturers and suppliers that support the construction industry.

4.3.3.3 Standard Forms

The Standard Forms are developed by OMB and are required of all grant applicants. These forms are available on *www.forms.gov* and should be submitted as attachments to the application in GrantSolutions. Some of the information required for these form will be in provided with the Narrative and Template Form.

• Standard Form 424, Application for Federal Assistance—This form should be scanned and submitted as an attachment to the application in GrantSolutions. This form should be completed by all applicants.

• Standard Form 424A, Budget Information—Non-Construction Programs—This form should be scanned and submitted as an attachment to the application in GrantSolutions. This form should be completed by applicants where applicable.

• Standard Form 424B, Assurances—Non-Construction Programs—This form should be scanned and submitted as an attachment to the application in GrantSolutions. This form should be completed by applicants to Track 1 PE/NEPA and Track 3.

• Standard Form 424C, Budget Information—Construction Programs—This form should be scanned and submitted as an attachment to the application in GrantSolutions. This form should be completed by applicants where applicable.

• Standard Form 424D, Assurances—Construction Programs—This form should be scanned and submitted as an attachment to the application in GrantSolutions. This form should be completed by applicants to Track 1 FD/construction, Track 2 and Track 4.

• FRA Assurances Document—This form can be obtained from FRA's Web site at *http://www.fra.dot.gov/downloads/admin/assurancesandcertifications.pdf.* The document should be signed by an authorized certifying official for the applicant, scanned into electronic format, and submitted as an attachment to the application in GrantSolutions. This form should be completed by all applicants.

4.3.4 Additional Information Required Prior to Award

4.3.4.1 For Construction Grants (Tracks 1, where applicable, and Track 4)

A project NEPA determination document (a Record of Decision, Finding of No Significant Impact, or CE determination) must have been issued by FRA prior to award of a construction grant. In addition to the supporting documentation required to be included

with an application, applicants will also be required to submit the following documentation prior to their receipt of an award under Track 1.

4.3.4.2 For all Tracks

Comprehensive executed partnership agreements, fulfilling all requirements for such agreements as set forth in Appendix 1.2.

4.3.4.3 For Tracks 1 and 2

As a condition of award, to the extent applicable, grant recipients must comply with the certification requirements of ARRA. These include Section 1201 (Maintenance of Effort); Section 1511 (Transparency and Oversight); and Section 1607 (Additional Funding Distribution and Assurance of Appropriate Use of Funds). On February 27, 2009, Secretary of Transportation LaHood sent a letter to the Governors of each State providing guidance and a template for the certifications required by ARRA, a copy of which is available on DOT's ARRA Web site, at *http://www.dot.gov/recovery/*. All applicable certifications must be submitted to the DOT at *TigerTeam.Leads@dot.gov*. Certifications may be submitted via email as electronic, scanned copies, with original signed versions to follow via U.S. mail. Additional guidance regarding these certifications is included in Appendix 3.2.4.

4.3.5 Application Package Requirements Checklist

The following application requirements checklist can be used by applicants to verify the documents necessary for submission under each Track:

APPLICATION CHECKLIST

Required document	Format	Applicable track				
		Track 1—projects		Track 2—programs	Track 3—planning	Track 4—FY09 funding
		FD/construction	PE/NEPA			
Program Forms						
☐ Preapplication	Template	✓	✓	✓	✓	✓
☐ Narratives and Templates Workbook (includes information on Project Benefits and Cost).	Template	✓	✓	✓	✓	✓
Supporting Documentation						
☐ Service Development Plan (SDP) (or equivalent).	No Specified Format			✓		
☐ Preliminary Engineering (PE) Materials	No Specified Format	✓		✓		✓
☐ NEPA Documentation	No Specified Format	✓		✓		✓
☐ Project Management Plan (or equivalent).	No Specified Format	✓		✓		✓
☐ Stakeholder Agreements	No Specified Format	✓		✓		✓
☐ Financial Plan (or equivalent)	No Specified Format	✓		✓		✓
Standard Forms						
☐ SF 424: Application for Federal Assistance.	Form	✓	✓	✓	✓	✓
☐ SF 424A: Budget Information—Non Construction.	Form		✓		✓	
☐ SF 424B: Assurances—Non Construction.	Form		✓		✓	
☐ SF 424C: Budget Information—Construction.	Form	✓		✓		✓
☐ SF 424D: Assurances—Construction	Form	✓		✓		✓
☐ FRA Assurances Document	Form	✓	✓	✓	✓	✓

4.3.6 Submission Dates and Times

4.3.6.1 For Tracks 1, 3, and 4

- Preapplications must be submitted to FRA via e-mail *HSIPR@dot.gov* (as specified in Section 4.3.9) no later than 11:59 p.m. EDT, Friday, July 10, 2009.
- The submission date and time will be determined based on email header information. FRA will email the applicant to confirm receipt of preapplication submissions.
- Full applications must be submitted to GrantSolutions (also as specified in 4.1) no later than 11:59 p.m. EDT, Friday, August 24, 2009. GrantSolutions will send the applicant an automated email confirming receipt of the application.
- Supporting documentation that cannot be submitted electronically through GrantSolutions may be sent by courier service with a waybill receipt stamped no later than 11:59 p.m. EDT, Friday, August 24, 2009. FRA will email the applicant to confirm receipt of supporting documentation sent by courier service.

4.3.6.2 For Track 2

- Preapplications must be submitted to FRA via e-mail *HSIPR@dot.gov* (as specified in Section 4.3.9) no later than 11:59 p.m. EDT, Friday, July 10, 2009.
- The submission date and time will be determined based on e-mail header information. FRA will e-mail the applicant to confirm receipt of preapplication submissions.
- Full applications must be submitted to GrantSolutions (also as specified in Section 4.1) no later than 11:59 p.m. EDT, Friday, October 2, 2009? GrantSolutions will send the applicant an automated e-mail confirming receipt of the application.
- Supporting documentation that cannot be submitted electronically may be sent by courier service with a waybill receipt stamped no later than 11:59 p.m. EDT, Friday, October 2, 2009. FRA will e-mail the applicant to confirm receipt of supporting documentation sent by courier service.

TRACK DEADLINES

	Track 1—projects	Track 2—programs	Track 3—planning	Track 4—FY2009 appropriations projects
Preapplication	July 10, 2009	July 10, 2009	July 10, 2009	July 10, 2009.
Application	August 24, 2009	October 2, 2009	August 24, 2009	August 24, 2009.
FRA Obligation	ASAP after selection (No later than September 30, 2010).	No later than September 30, 2011.	ASAP after selection	ASAP after selection.
Project(s) Completion	Within 2 years of obligation.	September 30, 2017*	Within 2 years of obligation.	Within 5 years of obligation.

*The FRA account shall be closed on that date and any remaining balance (whether obligated or unobligated) in the account shall be cancelled and no funds shall thereafter be available for obligation or expenditure for any purpose (31 U.S.C. 1552).

4.3.6.3 For All Tracks

- FRA will make individual arrangements with applicants for the submission of other information required prior to award.
- Subject to demonstration of unanticipated extenuating circumstances, FRA may consider application materials submitted after the deadlines prescribed above.

4.3.7 Intergovernmental Review

This program has not been designated as subject to Executive Order 12372 pursuant to 49 CFR part 17.

4.3.8 Funding Restrictions

In general, only those costs considered allowable pursuant to OMB Circular A–87, ''Cost Principles for State, Local, and Indian Tribal Governments'' (codified at 2 CFR part 225) will be considered for funding. Additionally, the following funding restrictions will apply to grants awarded under all Tracks, and must be taken into consideration in the development of budget information submitted as part of applications.

- Funding may not be used to fund expenses associated with the operation of Intercity Passenger Rail service;
- Funding may not be used for first-dollar liability costs for insurance related to the provision of Intercity Passenger Rail service;
- Funding may not be for any casino or other gambling establishment, aquarium, zoo, golf course, or swimming pool; this restriction will be applied generally in this program, regardless of the source of funds, and;
- While there is no cap on grant recipient's use of grant funds for management and administrative costs, such costs must be allowable, reasonable, allocable, and in accordance with applicable OMB cost principles cited above.

For Tracks funded under ARRA, FRA will also consider reimbursement of pre-award costs incurred as early as the enactment of ARRA (February 17, 2009). However, such costs will only be considered for reimbursement to the extent they are otherwise appropriate under allowable costs principles, are directly related to the award, and involve either pre-construction activities (*e.g.,* PE, NEPA, or FD), or construction activities that were subject to an environmental determination under NEPA made by FRA prior to the commencement of such construction activities. Projects for which construction activities commenced prior to receipt of an FRA environmental determination under NEPA will not be eligible for funding.

For Tracks funded under the FY 2008/2009 DOT Appropriations, FRA will also consider reimbursement of pre-award costs incurred as early as the enactment of the FY 2009 DOT Appropriations Act (March 11, 2009). However, such costs will only be considered for reimbursement to the extent they are otherwise appropriate under allowable cost principles, are directly related to the award, and involve either pre-construction activities (*e.g.,* PE, NEPA, or FD), or construction activities that were subject to an environmental determination under NEPA made by FRA prior to the commencement of such construction activities. Projects for which construction activities commenced prior to receipt of an FRA environmental determination under NEPA will not be eligible for funding.

4.3.9 Other Submission Requirements

Preapplications should be submitted by e-mail to *HSIPR@dot.gov*. As detailed in Section 4.1 of this guidance, applications, including supporting documentation, should be submitted through GrantSolutions. Should an applicant encounter technical difficulties using the GrantSolutions system that may cause the applicant to miss the application deadline, the application may be submitted by e-mail to *HSIPR@dot.gov*. For applications submitted by email, the applicant should print, sign, scan into electronic format (preferably Adobe Portable Document Format (.pdf)), and attach to the submission e-mail copies of all application forms requiring the applicant's signature.

For supporting documentation (described in Section 4.3.3 2 of this) that an applicant is unable to submit electronically (such as oversized engineering drawings), applicants may submit an original and two copies to the following address:

U.S. Department of Transportation,
Federal Railroad Administration,
Attn: HSIPR Program Information (RDV–10),
Mail Stop 20, Room W38–202,
1200 New Jersey Ave., SE.,
Washington, DC 20590.

Due to delays caused by enhanced screening of mail delivered via the U.S. Postal Service, applicants are advised to use other means of conveyance (such as courier service) to assure timely receipt of materials.

Section 5: Application Review Information

5.1 Review Criteria

Once an application is screened for completeness and eligibility (both applicant and project eligibility), it will go through a review process. This process will involve two steps (detailed further in Section 5.2): (i) Evaluation and (ii) selection. For evaluation, applications in all Tracks will be individually reviewed and assessed against up to seven evaluation criteria—organized into three categories—outlined below.[10] For each of the applicable criteria, the application will be assigned a rating of between one and five points, based on the application's fulfillment of the objectives of each criterion. The ratings will be assigned by professional staff employed by FRA and other DOT modal administration

[10] Tracks for which the sources of funding antedated the ARRA (*i.e.*, Tracks 3 and 4) will not be rated on Criterion A.2, Economic Recovery Benefits.

staff as needed. Experts outside of DOT may also be considered.[11]

These individual criterion ratings will then be combined according to priority of criteria (which vary by Track), to arrive at an overall rating for the application. The comparative priorities appear in the table below.

EVALUATION CRITERIA PRIORITIES

Evaluation criteria	Priority			
	Track 1	Track 2	Track 3 [12]	Track 4
Public Return on Investment.				
1. Transportation Benefits	2	1	1	1
2. Economic Recovery Benefits	1	5	n/a	n/a
3. Other Public Benefits	6	2	n/a	5
Project Success Factors.				
1. Project Management Approach	3	3	2	2
2. Sustainability of Benefits	5	4	n/a	3
Other Attributes.				
1. Timeliness of Project Completion	4	6	3	4

[12] The specifics of the relevant Track 3 Planning evaluation criteria will vary somewhat from those of Tracks 1, 2 and 4 to reflect the unique character of planning activities.

5.1.1 Public Return on Investment

Applications will be evaluated against the following three criteria to assess the proposed project's ability to produce a public return on investment, taking into account both forecasted benefits, the overall cost of the proposed project, and the amount of Federal funding requested. Evaluation against these criteria will consider the qualitative factors outlined below, as supported by key quantitative metrics. As described in Section 4, applicants for Tracks 1, 2, and 4 must provide information quantifying the anticipated benefits of the proposed project; for Tracks 1 and 4, using service output data (delay reduction, schedule improvement, or capacity increases), and for Track 2, using transportation output data (increases in passenger-miles traveled on Intercity Passenger Rail services, including shifts from other modes of transportation). For Track 3, public return on investment criteria are limited to transportation benefits.

Careful economic analysis that quantifies and demonstrates the monetary value of user benefits and, if available, public benefits will be particularly useful to FRA in evaluating the applications. The systematic process of comparing expected benefits and costs helps decision-makers organize information about, and evaluate trade-offs between, alternative transportation investments. FRA will consider benefits and costs using standard data provided by applicants and seek to evaluate applications in a manner consistent with Executive Order 12893, Principles for Federal Infrastructure Investments, 59 FR 4233, to base infrastructure investments on systematic analysis of expected benefits and costs, including both quantitative and qualitative measures.

5.1.1.1 Transportation Benefits

Each application will be assessed based on its demonstration of the proposed project's potential to meet the purpose and need and to achieve transportation benefits in a cost-effective manner, as set forth through the President's strategic transportation goals and the objectives of PRIIA. Factors to be considered in assigning a rating will include the contribution the proposed project would make to:

- Supporting the development of intercity high-speed rail service;
- Generating improvements to Intercity Passenger Rail service, as reflected by estimated increases in ridership (as measured in passenger-miles), increased on-time performance (as measured in reductions in delays), reduced trip time, additional service frequency to meet anticipated or existing demand, and other factors;
- Generating cross-modal benefits, including anticipated favorable impacts on air or highway traffic congestion, capacity, or safety, and cost avoidance or deferral of planned investments in aviation and highway systems;
- Creating an integrated Intercity Passenger Rail network, including integration with existing Intercity Passenger Rail services, allowance for and support of future network expansion, and promotion of technical interoperability and standardization (including standardizing operations, equipment and signaling);
- Encouragement of intermodal integration through provision of direct, efficient transfers among intercity transportation and local transit networks at train stations, including connections at airports, bus terminals, subway stations, ferry ports, and other modes of transportation;
- Enhancing intercity travel options;
- Ensuring a state of good repair of key Intercity Passenger Rail assets;
- Promoting standardized equipment (or rolling stock), signaling, communications and power;
- Improved freight or commuter rail operations, in relation to proportional cost-sharing (including donated property) by those other benefiting rail users;
- Equitable financial participation in the project's financing, including, but not limited to, consideration of donated property interests or services; financial contributions by freight and commuter rail carriers commensurate with the benefit expected to their operations; and financial commitments from host railroads, non-Federal governmental entities, nongovernmental entities, and others; and
- The overall safety of the transportation system, including the encouragement of the use of PTC technologies, and commitments by States or railroads of financial resources to improve the safety of highway/rail grade crossings over which intercity passenger rail service operates.

5.1.1.2 Economic Recovery Benefits

Each application will be assessed based on its demonstration of the proposed project's anticipated positive economic and employment impacts and

[11] Experts will be selected based on relevant qualifications and assurance of lack of conflict of interest.

potential to promote economic recovery in a cost-effective manner, consistent with the purposes and principles of ARRA. Factors to be considered in assigning a rating will include the contribution the proposed project would make to:

- Rapidly promoting new or expanding business opportunities including the short- and long-term creation and preservation of jobs, during construction and thereafter;
- Increasing efficiency by promoting technological advances;
- Providing long-term economic benefits; and
- Avoiding reductions in State-provided essential services.

5.1.1.3 Other Public Benefits

Each application will be assessed based on its demonstration of the proposed project's potential to achieve other public benefits in a cost-effective manner. Factors to be considered in assigning a rating will include the contribution the proposed project would make to:

- Environmental quality and energy efficiency and reduction in dependence on foreign oil, including use of renewable energy sources, energy savings from traffic diversions from other modes, employment of green building and manufacturing methods, reductions in key emissions types, and the purchase and use of environmentally sensitive, fuel-efficient, and cost-effective passenger rail equipment; and
- Promoting livable communities, including integration with existing high-density, livable development (*e.g.*, central business districts with public transportation, pedestrian, and bicycle distribution networks, and incorporation of transit-oriented development).

5.1.1.4 Public Return on Investment for Track 3—Planning

Planning projects will be evaluated based on the extent to which they meet the President's strategic transportation goals by leading to benefits to the public, including transportation accessibility and interconnectivity. Planning projects for Intercity Passenger Rail service will be evaluated for the extent that they: (1) Lead to benefits for Intercity Passenger Rail including travel time reductions, increased frequencies, and enhanced service quality; (2) resolve safety issues; (3) resolve intercity passenger rail reliability issues; (4) are integrated and complementary to the relevant comprehensive planning process (23 U.S.C. 135); and (5) support livable communities. Proposed planning projects will also be evaluated for their effectiveness in: (1) Directly leading to project and/or Service Development Program applications and (2) leading to NEPA for route selection; and leading to completion of an SDP.

5.1.2 Project Success Factors

Applications will be evaluated against the following two criteria to assess the proposed project's likelihood of successful implementation and realization of benefits. Evaluation against these criteria will consider the factors outlined below, which take into account the thoroughness and quality of the supporting documentation—the project management plan, financing plan, and SDP (or equivalent project planning and programming documents)—submitted with the application.

5.1.2.1 Project Management Approach

While prioritizing projects that will generate tangible transportation and economic benefits, each application will also be assessed to determine the risk associated with the project's delivery within budget, on time, and as designed. Factors to be considered in assigning a rating will include:

- The applicant's financial, legal, and technical capacity to implement the project including whether the application depends upon receipt of any waiver(s) of Federal railroad safety regulations that have not been obtained;
- The applicant's experience in administering similar grants and projects;
- The soundness and thoroughness of the cost methodologies and assumptions, and estimates for the proposed project;
- The adequacy of any completed engineering work to assess and manage/mitigate the proposed project's engineering and constructability risks;
- The reasonableness of the schedule for project implementation;
- The thoroughness and quality of the project management plan;
- The sufficiency of system safety and security planning;
- The timing and amount of the project's future noncommitted investments;
- The project's progress, at the time of application, towards compliance with environmental protection requirements;
- The comprehensiveness and sufficiency, at the time of application, of agreements with key partners (particularly infrastructure owning railroads) that will be involved in implementing the project; and
- The overall completeness and quality of the application, including the comprehensiveness of its supporting documentation.

5.1.2.2 Sustainability of Benefits

Each application will be assessed based on the risk associated with the proposed project's capacity to generate, as planned, its anticipated transportation and economic benefits. Factors to be considered in assigning a rating will include:

- The presence and quality of a financial plan that analyzes the financial viability of the proposed rail service;
- The quality and reasonableness of revenue and operating and maintenance cost forecasts for the benefiting Intercity Passenger Rail service(s);
- The availability of any required operating financial support preferably from dedicated funding sources for the benefiting Intercity Passenger Rail service(s);
- The quality and adequacy of project identification and planning;
- The reasonableness of estimates for user and non-user benefits for the project;
- The reasonableness of the operating service plan, including its provisions for protecting the future quality of other services sharing the facilities to be improved; and
- The comprehensiveness and sufficiency, at the time of application, of agreements with key partners (including the railroad operating the Intercity Passenger Rail service as well as infrastructure-owning railroads) that will be involved in the operation of the benefiting Intercity Passenger Rail service, including the commitment of any affected host-rail carrier to ensure the realization of the anticipated benefits, preferably through a commitment by the affected host-rail carrier(s) to an enforceable on-time performance of passenger trains of 80 percent or greater.

5.1.3 Other Attributes

Applications will also be evaluated against the following two additional criteria.

5.1.3.1 Timeliness of Project Completion

Each application will be assessed based on the timeliness of its implementation schedule, including:

- The readiness of the project to be commenced; and
- The timeliness of project completion and the realization of the project's anticipated benefits.

5.2 Review and Selection Process

5.2.1 Application Evaluation Process

Submitted applications will be screened for eligibility and completeness. Applications determined to be both complete and eligible will be referred to a technical evaluation panel consisting of subject-matter experts for assignment of ratings, as described in Section 5.1. Panel members will use a merit-based approach to review applications based on the above evaluation criteria. Ratings assigned by the evaluation panels will serve as the basis for a presentation of applications to the FRA Administrator, who will determine the final selection of applications for awards.

5.2.2 Additional Selection Criteria

In addition to the ratings against evaluation criteria assigned by the technical evaluation panels, the FRA Administrator may take into account several cross-cutting and comparative selection criteria to determine awards of funding. The Administrator will review the preliminary results to ensure that the scoring has been applied consistently, and that the collective results meet several key priorities essential to the success and sustainability of the program as detailed below.

SELECTION CRITERIA

Selection criteria (balance and diversity)	Example factors
1. Region/location	■ Geography and economic conditions.
2. Innovation	■ Technology and industrial/capacity development.
3. Partnerships	■ Multi-State agreements.
4. Tracks and round timing	■ Project costs and schedules.

Following evaluation of each application by review panels, the Administrator will review the preliminary results to ensure that the scoring has been applied consistently, and that the collective results meet several key priorities essential to the success and sustainability of the program. To ensure a balanced national program, this review will include:

5.2.2.1 Region/Location

- Ensuring appropriate level of regional balance across the country.
- Ensuring appropriate level of balance among large and small population centers.
- Ensuring integration and augmentation of the nationwide transportation network.
- Addressing the ARRA requirement to provide assistance to economically-distressed regions most impacted by the recession.

5.2.2.2 Innovation

- Pursuing new technology and innovation where the public return on investment is favorable, while ensuring delivery of near-term transportation, public and recovery benefits.
- Promoting domestic manufacturing, supply and industrial development, including U.S.-based equipment manufacturing and supply industries.
- Developing professional railroad engineering, operating, planning and management capacity needed for sustainable Intercity Passenger Rail development.

5.2.2.3 Partnerships

- Where corridors span multiple States, emphasizing those that have organized multi-State partnerships with joint planning and prioritization of investments.
- Employing creative approaches to ensure workforce diversity and use of disadvantaged and minority business enterprises.

5.2.2.4 Preservation of Funding for Track 2 Program and Future Award Rounds

- While ready-to-go projects are critical for delivering early program benefits, the longer-term future of the program depends on strong Track 2 corridor program development. Sufficient funds will be set aside for Track 2 and, if possible, for future rounds of funding.

Section 6: Award Administration Information

6.1 Award Notices

Upon approval of an application, notification will be sent to the grant recipient through GS that the award is waiting acceptance.

FRA will publicly announce selected projects and funding levels. For projects that were not selected, FRA will notify the applicant of their decision and provide the following:

- Suggestions on application revisions for any subsequent resubmission rounds (if desired by applicant); and
- Guidance regarding subsequent rounds (*e.g.,* new/revised guidance, application due dates).

6.2 Administrative and National Policy Requirements

Grant recipients must follow all administrative and national policy requirements including: procurement standards, compliance with federal civil rights laws and regulations, disadvantaged business enterprises (DBE), FRA's and OMB's Assurances and Certifications, ADA, and NEPA. For a complete list of all administrative and national policy requirements, refer to Appendix 3.2.

6.3 ARRA-Specific Grant Requirements

Grant recipients receiving ARRA-funded grants must comply with all requirements detailed in ARRA including: The prohibition on using funds for certain activities, signage requirements, and certification requirements. For a complete list of all ARRA-specific grant requirements, refer to Appendix 3.3.

6.4 Program-Specific Grant Requirements

Grant recipients receiving PRIIA-authorized grants must comply with all requirements set forth in PRIIA, including adhering to: Buy America, Labor Protection, and Davis-Bacon Act. For a complete list of all PRIIA-specific grant requirements, refer to Appendix 3.4.

6.5 General Requirements

Grant recipients must comply with reporting requirements and, where applicable, ARRA-specific reporting requirements. All post-award information pertaining to reporting, auditing, monitoring, and the close-out process is detailed in Appendix 3.5.

Section 7: Questions and Clarifications

Questions about this guidance and the application process should be submitted to the HSIPR Program Manager via email at *HSIPR@dot.gov.*

LIST OF ACRONYMS

Acronym	Meaning
ACF	Administration for Children and Families.
ADA	Americans with Disabilities Act.
April 2009 Strategic Plan	U.S. Department of Transportation, Federal Railroad Administration, Vision for High-Speed Rail in America, High-Speed Rail Strategic Plan [under] the American Recovery and Reinvestment Act of 2009, April 16, 2009; available at: *http://www.fra.dot.gov/Downloads/Finalpercent20FRApercent20HSRpercent20Stratpercent20Plan.pdf*.
ARRA	American Recovery and Reinvestment Act of 2009 (Pub. L. 111–5).
CAST	Custom Applications Support and Training Unit (GrantSolutions).
CCR	Central Contractor Registration database.
CE	Categorical Exclusion—a class of action for the NEPA process.
CFS report	Federal Railroad Administration, High-Speed Ground Transportation for America, September 1997; available at: *http://www.fra.dot.gov/us/content/515*.
Department	The U.S. Department of Transportation.
DUNS	Data Universal Number System.
EA	Environmental Assessment—a NEPA document.
EIS	Environmental Impact Statement— the most extensive type of NEPA document.
FD	Final Design.
FONSI	Finding of No Significant Impact—a possible decision concluding the NEPA process.
FRA	Federal Railroad Administration—an Operating Administration of the U.S. Department of Transportation.
FTA	Federal Transit Administration.
FY	Fiscal Year.
FY 2008 DOT Appropriations Act	Transportation, Housing and Urban Development, and Related Agencies Appropriations Act, 2008 —Title I of Division K of Public Law 110–161, December 26, 2007.
FY 2009 DOT Appropriations Act	Transportation, Housing and Urban Development, and Related Agencies Appropriations Act, 2009 —Title I of Division I of Public Law 111–8, March 11, 2009.
GS	GrantSolutions Grants Management System.
ICC	Interstate Commerce Commission.
LOI	Letter of Intent.
mph	miles per hour.
NEPA	National Environmental Policy Act.
NTD	National Transit Database.
OTP	On-time performance.
PE	Preliminary engineering.
PRIIA	Passenger Rail Investment and Improvement Act of 2008 (Division B of Pub. L. 110–432).
PTC	Positive Train Control.
ROD	Record of Decision—a possible decision concluding of the NEPA process.
RSIA	Rail Safety Improvement Act of 2008 (Division A of Pub. L. 110–432, October 16, 2008).
State DOT	State Department of Transportation.
State Grant Program.	Capital Assistance to States—Intercity Passenger Rail Service program—established in FY 2008 DOT Appropriations Act and continued in the FY 2009 DOT Appropriations Act.

Appendix 1: Additional Information on Eligibility

Appendix 1.1 Applicant Types

State—A State department of transportation (State DOT) which is the State-wide instrumentality or agency of a State, in the form of a department, commission, board, or official of any State, charged by its laws with the responsibility for transportation-related matters within the State, including high-speed rail/intercity passenger rail.

Group of States—A group of two or more States in which an agreement has been established to work in coordination to build and operate rail projects within specified boundaries and within the duration of agreement. The agreement should specify the commitments (financial and otherwise) of all parties to developing and maintaining rail operations for a specified corridor. This type of agreement requires the backing of several political and administrative entities within each State. Such agreement should include but not be limited to the following: identification of all parties involved, the duration of the agreement, governance arrangements, commitment of partners, risk and benefits sharing arrangements, liabilities, level of service per partner or client, services to be provided, dispute resolution, substandard performance, termination, signatories. A group of States wishing to submit an application must designate one State within the group to serve as the lead State for the application. This lead State would be responsible for submitting the application and administrating any grant that is awarded to the group of States.

Interstate Compact—An entity created through an agreement between two or more States. Frequently, these compacts create a new governmental agency that is responsible for administering or improving some shared resource, such as public transportation infrastructure. In some cases, a compact serves simply as a coordination mechanism between independent authorities in the member States. Article I, Section 10 of the United States Constitution provides that no State shall enter into an agreement or compact with another State without the consent of Congress. Interstate compacts for the purpose of Intercity Passenger Rail development have been established previously, based on the implied general consent of Congress expressed through Public Law 98–358, in which Congress explicitly granted consent to the creation of an interstate compact between the States of Ohio, Indiana, Michigan, Pennsylvania, Illinois, West Virginia, and Kentucky for the purpose of developing Intercity Passenger Rail.

Public Agencies, established by one or more States (Having responsibility for providing Intercity Passenger Rail service)—A publicly created and owned, not-for-profit agency, other than direct instrumentalities of States or agencies created under an interstate

compact, having responsibility for providing or developing Intercity Passenger Rail service. Such agencies would include public authorities and joint powers authorities created and authorized under State law, and may have responsibilities over a limited geographic scope (such as a region within a State), or related to a specific service, project, or development effort (such as the construction of a specific infrastructure project).

Amtrak, in cooperation with States—The National Railroad Passenger Corporation undertaking a project subject to an agreement with one or more States (as defined above).

Appendix 1.2 Minimum Qualifications for Applicant Eligibility

An applicant must, in addition to demonstrating that it is of an eligible type for the track and funding source under which it is applying, affirmatively demonstrate that it has or will have the legal, financial, and technical capacity to carry out the proposal. In addition, for non-planning applications under Track 1, Track 2, and Track 4, the applicant must demonstrate that it has or will have satisfactory continuing control over the use of equipment or facilities acquired, constructed, or improved by the project, and the capability and willingness to maintain such equipment or facilities.

In the following discussion of the means by which applicants can satisfy these minimum requirements, the term ''project'' refers generally to the substance of the applicant's proposal, regardless of the Track under which it is being advanced.

For an applicant to demonstrate the legal, financial, and technical capacity to carry out its proposed project, it will be required to address the following qualifications:

- For an entity other than a State, its legal authority to undertake the proposed project and apply for Federal financial assistance;
- The applicant's ability to absorb potential cost overruns or financial shortfalls. For entities other than States, the demonstration of such ability should include a description of the entity's own financial resources, its ability to raise revenue through taxation, dedicated funding sources, or other means, and/or explicit financial backing by one or more State governments;
- The applicant's experience in effectively administering grants of similar scope and value (including timely completion of grant deliverables, compliance with grant conditions, and quality and cost controls); and
- The applicant's experience in managing railroad investment projects of a nature similar to that for which funding is being requested.

For an applicant to demonstrate that it has or will have satisfactory continuing control over the use of equipment or facilities acquired, constructed, or improved by the project, it will be required to show either:

- That the applicant has or will have direct ownership of the equipment or facilities acquired, constructed, or improved by the project; or
- That the applicant has secured or has made progress towards securing and will have contractual agreements in place with the entity or entities (*e.g.,* a local government, or one or more private railroads) that have or will have direct ownership of such assets.

For an applicant to demonstrate that it has or will have the capability and willingness to maintain the equipment or facilities acquired, constructed, or improved by the project, it will be required to show:

- That it has made progress towards, and will have contractual agreements in place with, any entity or entities (*e.g.,* a local government, or one or more private railroads) that have or will have direct ownership of the equipment or facilities acquired, constructed, or improved by the project, which address financial and operational responsibility for asset maintenance;
- That to the extent financial responsibility will fall to the applicant, the applicant has the ability to cover maintenance costs. For entities other than States, the demonstration of such ability should include a description of the entity's own financial resources, ability to raise revenue through taxation, and/or explicit financial backing by one or more State governments; and
- The applicant's experience in maintaining assets with similar financial and operational maintenance requirements as those for the assets for which funding is being requested.

Information and documentation demonstrating the fulfillment of the minimum qualifications described above will be required to be submitted as part of full application (see Section 4.3.3.2).

Appendix 1.3 Definition of Intercity Passenger Rail

''Intercity rail passenger transportation'' is defined at 49 U.S.C. 24102(4) as ''rail passenger transportation except commuter rail passenger transportation.'' Likewise, ''commuter rail passenger transportation'' is defined at 49 U.S.C. 24102(3) as ''short-haul rail passenger transportation in metropolitan and suburban areas usually having reduced fare, multiple ride, and commuter tickets and morning and evening peak period operations.'' In common use, the general definition of ''rail passenger transportation'' excludes types of local or regional rail transit such as light rail, streetcars, and heavy rail. Similarly, both Intercity Passenger Rail transportation and commuter rail passenger transportation exclude single-purpose scenic or tourist railroad operations.

The since-terminated Interstate Commerce Commission (ICC) established six features to aid in classifying a service as ''commuter'' rather than ''intercity'' rail passenger transportation: [13]

- The passenger service is primarily being used by patrons traveling on a regular basis either within a metropolitan area or between a metropolitan area and its suburbs;
- The service is usually characterized by operation performed at morning and peak periods of travel;
- The service usually honors commutation or multiple-ride tickets at a fare reduced below the ordinary coach fare and carries the majority of its patrons on such a reduced fare basis;
- The service makes several stops at short intervals either within a zone or along the entire route;
- The equipment used may consist of little more than ordinary coaches; and
- The service should not extend more than 100 miles at the most, except in rare instances; although service over shorter distances may not be commuter or short haul within the meaning of this exclusion.

FTA further refined the definition of commuter rail in the glossary for its National Transit Database (NTD) [14] Reporting Manual. In particular, FTA refined the ICC's third ''feature'' by specifying that ''predominantly commuter [rail passenger] service means that for any given trip segment (*i.e.,* distance between any two stations), more than 50 percent of the average daily ridership travels on the train at least three times a week.''

In judging the eligibility of an application under this solicitation, FRA will determine whether the rail passenger service that is primarily intended to benefit from the proposal

[13] *Penn Central Transportation Company Discontinuance or Change in Service of 22 Trains between Boston, Mass, and Providence R.I.,* February 10, 1971, I.C.C. 338, 318–333.

[14] In additional to serving as a reference database, the NTD captures data that serve as the basis for apportioning and allocating funding to eligible grantees under FTA's formula grant programs.

constitutes ''intercity passenger rail transportation'' under the statutory definition and ICC and FTA interpretations. FRA may also take into account whether the primary intended benefiting service has been or is currently the direct and intended beneficiary of funding provided by another Federal agency (*e.g.,* FTA) for the purpose of improving commuter rail passenger transportation and whether the service in question is or will be operated by or on behalf of a local, regional, or State entity whose primary rail transportation mission is the provision of commuter or transit service.

Appendix 2: Additional Information on Planning and Engineering

Appendix 2.1 Service Development Plan (or equivalent)

A Service Development Plan (SDP) is a plan for developing High-Speed Rail/Intercity Passenger Rail service, either initiating new service or improving existing service (*e.g.,* adding train frequencies and/or reducing trip times)—typically focused on distinct phases and/or geographic sections of service improvement. A SDP or equivalent covers three general topics: (i) Rationale (including purpose and need), (ii) service/operating plan and prioritized capital plan, and (iii) implementation plan (including project management approach, stakeholder agreements and financial plan).

The completion of a SDP is a pre-requisite for eligibility for applications for Track 2-Programs. FRA acknowledges the inherent complexity of the planning efforts required to develop a SDP. The precise structure of a SDP can vary at the discretion of the applicant; FRA does not pre-determine SDP form and structure. Only certain illustrative topics need to be included in a SDP—thus the applicant has the flexibility to tailor the SDP to the needs of their program.

After receiving the preapplications for Track 2, subject to available resources, FRA will be available for a kick-off discussion with the prospective applicant that will include a review of the contents of the SDP. FRA will provide assistance to Track 2 applicants in clarifying whether the information necessary for the SDP is complete. FRA will also discuss submission requirements with prospective applicants.

A complete SDP is a planning approach that would need to address such topics as the following:

- Illustrative topics dealing with program rationale—The SDP includes a description of the corridor's transportation challenges and opportunities based on current and forecasted travel demand and capacity conditions. Through the SDP, the applicant has the opportunity to show FRA and its constituents how the proposed HSIPR Service Development Program can cost-effectively address transportation and other needs considering system alternatives (highway, air, other, as applicable). Qualitative and quantitative assessments of the costs, benefits and impacts and risks of the alternatives will provide decision makers with sufficient information. The SDP might also explore synergies between the High-Speed Rail/Intercity Passenger Rail proposal and large-scale goals and development plans within its service region and communities.
- Illustrative topics dealing with operations—The SDP describes the train service to be provided for each phase of new or improved Intercity Passenger Rail service including: the service frequency, timetable (including time-distance ''stringline'' diagrams), general station locations, intermodal connections, and train consists. The SDP would describe the underlying operational analyses, including railroad operation simulations and equipment and crew scheduling analyses, which in turn reflect such variables as travel demand and rolling stock configuration. The planning horizon should be consistent with the anticipated useful lives of the improvements to be introduced.
- Illustrative topics dealing with capital needs—The SDP describes the rail equipment and infrastructure improvements for each discrete phase of service implementation. If applicable, the SDP would prioritize improvements for each phase. The SDP presents estimated capital costs for projects and project groups, with documentation of assumptions and methods. Initial capital expenditures estimates to bring the service to its full operating capability, accommodation of future traffic growth and ongoing expenditures for replacement of system components should be included.
- Illustrative topics dealing with operating and financial results—The SDP includes operating and financial projections for each phase of the planned intercity passenger rail service. The SDP will address the methods, assumptions and outputs for travel demand forecasts, the expected revenue from the service, and all operating expenses for the train service including maintenance of way, maintenance of equipment, transportation (train movement), passenger traffic and services (marketing, reservations/information, station, and on-board services), and general/administrative expenses. Cost-sharing arrangements with infrastructure owners and rail operators should also be included.
- Illustrative topics dealing with public benefits—The SDP includes a description of user and non-user benefits and, to the extent readily quantifiable, the estimated economic value of those benefits, with particular attention to topics prominent in ARRA, *i.e.,* job creation and retention and potential energy savings.
- Illustrative topics dealing with program implementation—The SDP presents a Service Development Program schedule for carrying out each phase; a preliminary description of the intended techniques of project management that will assure quality, cost, and budget control; and the financing and organizational plans for carrying out the proposed strategy.

If the High-Speed Rail/Intercity Passenger Rail service contemplated under the SDP makes use of facilities that would be shared with freight, commuter rail, or other Intercity Passenger Rail services, the existing and future characteristics of those services—as developed cooperatively with freight, commuter, and Intercity Passenger Rail partners—would need to be integral to the High-Speed Rail/Intercity Passenger Rail SDP. In particular, the SDP needs to show how the proposed Service Development Program will protect the quality of those other services through a planning horizon year and under assumptions mutually agreed to with the other partners.

Appendix 2.2 Preliminary Engineering (PE)

PE completion is a prerequisite for projects submitted under Track 1—FD/Construction projects, Track 2—Programs, and Track 4. PE entails sufficient engineering design to define a project, including identification of all environmental impacts, design of all critical project elements at a level sufficient to assure reliable cost estimates and schedules (in turn sufficient to complete project management and financial plans), and definition of procurement requirements and strategies.

The PE development process starts with the evaluation of project design alternatives (a range of rail improvements, specific alignments, and project designs) sufficient to support subsequent NEPA analysis. The NEPA environmental determination is a prerequisite for FRA to obligate

construction funds. As with the SDP, FRA acknowledges the complexity of the work required for PE, and that it will vary depending on the project scope. Thus, FRA does not pre-determine the form and structure of the PE work. FRA has opted to specify the illustrative contents of PE—thus allowing the applicant discretion to pursue the most workable approach tailored to its needs and suitable for the proposed project.

PE results in detailed estimates of project costs, benefits, and impacts of the preferred alternative that merit a higher degree of confidence than those prepared in earlier stages of planning. FRA considers that PE for a major capital investment project is complete when:

- The signed environmental Record of Decision (ROD) or Finding of No Significant Impact (FONSI) signals that the NEPA process has been completed;
- The project scope, capital cost estimates, and financial plan are finalized;
- The project sponsor has adequately demonstrated its technical capability to advance the project into FD and construction;
- The project sponsor has adequately demonstrated its process and schedule for filing any safety regulatory waivers necessary to implement the project; and
- The project sponsor has provided an adequate system safety program plan and any necessary collision/derailment hazard analysis.

The products of PE will include: engineering designs; a detailed project description, including provisions for compliance with the ADA; a highly accurate project cost estimate (including a description of methodologies and assumptions employed in developing the estimate) that identifies major components and that includes contingencies that are reduced from previous estimates and are broken down by phase and functional area, a thorough project management plan suitable for this phase of project development; and a solid project financial plan that includes Federal and non-Federal funding committed to the project.

PE documentation will typically include: (1) Scale maps or scale aerial photography of existing conditions at a scale of one inch = 100 to 500 feet depending on location (built-up vs. undeveloped areas); and (2) design plan drawings overlaid on the maps/photography. These design drawings will typically show: (i) Existing railroad right-of-way limits along with the railroad ownership; (ii) Proposed track changes including track removals and track installations showing track centers, turnout sizes, curve and spiral data, etc.; (iii) Vertical profiles and grades of existing and proposed construction; (iv) Public and private at-grade highway crossings; and (v) Passenger stations, building(s), platforms, parking, access to the primary highway system in the area, and public transit services and facilities.

The detailed project description developed in the PE typically includes an assessment of the physical condition and location of the existing project area (generally two to three miles beyond the project construction limits) and elements associated with the design(s). These elements may include: bridges (rail and highway); track including the number and location of previously existing railroad tracks on a roadbed; buildings (stations and maintenance facilities, etc.); signal systems and interlocked detectors, switches, derails, and snow melters; utility systems on, over, adjacent to or under the rail line and agreements concerning them; electrification systems, if any; description of highway crossing warning systems (if any) and daily traffic counts at public and private at-grade highway crossings; existing and proposed railroad operations and routes of freight, commuter and intercity trains with train daily numbers of trains by type; a safety and security management plan; and STRACNET routes and/or moves for commercial high and wide loads. For maintenance facilities, the PE outputs will describe and provide drawings that show the location, track and facility layout, specialized equipment (if any), office and employee welfare facilities, etc.

FRA will be available, subject to available resources, to assist applicants in clarifying whether the PE is complete and encourages applicants to contact FRA to discuss PE.

Appendix 3: Additional Information on Award Administration and Grant Conditions

Appendix 3.1 Award Notices

Upon approval of an application, notification will be sent to the grant recipient through GrantSolutions that the award is waiting acceptance.

FRA will publicly announce selected projects and funding levels. For projects that were not selected, FRA will notify the applicant of its decision and provide the following:

- Suggestions on application revisions for any subsequent resubmission rounds (if desired by applicant); and
- Guidance regarding subsequent rounds (*i.e.,* new/revised guidance, application due dates)

Appendix 3.2 Administrative and National Policy Requirements

FRA will make funds available to the grant recipient through a grant or cooperative agreement. FRA will decide which vehicle to use based upon the level of anticipated FRA involvement in the project. FRA will use a grant agreement where limited Federal involvement is anticipated and a cooperative agreement in those situations involving greater Federal participation.

Below is a discussion of some of the more important specific requirements that are a feature of FRA's typical grant agreement and will likely be included in every grant agreement under this program (FRA's use of the term grant herein is intended to encompass both grant and cooperative agreements):

Appendix 3.2.1 Contracting Information

A grant recipient's procurement of goods and services must comply with the Procurement Standards requirements set forth at 49 CFR 18.36 or 49 CFR 19.40 through 19.48, whichever is applicable depending on the type of grantee (part 18 covers State and local governments and part 19 covers non-profit and for-profit entities), and with applicable supplementary U.S. DOT or FRA directives or regulations.

Appendix 3.2.2 Compliance With Federal Civil Rights Laws and Regulations

The grant recipient must comply with all civil rights laws and regulations, in accordance with applicable Federal directives, except to the extent that the FRA determines otherwise in writing. These include, but are not limited to, the following: (a) Title VI of the Civil Rights Act of 1964 (Pub. L. 88–352) (as implemented by 49 CFR part 21), which prohibits discrimination on the basis of race, color or national origin; (b) Title IX of the Education Amendments of 1972, as amended (20 U.S.C. 1681–1683, and 1685–1686), which prohibits discrimination on the basis of sex, (c) Section 504 of the Rehabilitation Act of 1973, as amended (29 U.S.C. 794), which prohibits discrimination on the basis of handicaps; (d) the Age Discrimination Act of 1975, as amended (42 U.S.C. 1601–1607), which prohibits discrimination on the basis of age; (e) the Drug Abuse Office and Treatment Act of 1972 (Pub. L. 92–255), as amended, relating to nondiscrimination on the basis of drug abuse; (f) the

Comprehensive Alcohol Abuse and Alcoholism Prevention, Treatment and Rehabilitation Act of 1970 (Pub. L. 91–616), as amended, relating to nondiscrimination on the basis of alcohol abuse or alcoholism; (g) §§ 523 and 527 of the Public Health Service Act of 1912 (42 U.S.C. 290 dd–3 and 290 ee–3), as amended, relating to confidentiality of alcohol and drug abuse patient records; (h) Title VIII of the Civil Rights Act of 1968 (42 U.S.C. 3601 *et seq.*), as amended, relating to nondiscrimination in the sale, rental, or financing of housing, (i) 49 U.S.C. 306, which prohibits discrimination on the basis of race, color, national origin, or sex in railroad financial assistance programs; (j) any other nondiscrimination provisions in the specific statute(s) under which application for Federal assistance was made; and (k) the requirements of any other nondiscrimination statute(s) which may apply to the grant recipient. Grant recipients must comply with all regulations, guidelines, and standards adopted under the above statutes. The grant recipient is also required to submit information, as required, to the FRA Office of Civil Rights concerning its compliance with these laws and implementing regulations, and its activities implementing a grant award.

Appendix 3.2.3 Disadvantaged Business Enterprises (DBE)

The FRA encourages its grant recipients to utilize small business concerns owned and controlled by socially and economically disadvantaged individuals (as that term is defined for other DOT operating administrations at 49 CFR part 26) in carrying out projects funded under ARRA, although FRA grant recipients are not required to do so. The DOT DBE regulation (49 CFR part 26) only applies to certain categories of Federal highway, Federal transit, and airport funds. The FRA is not covered under the DOT DBE regulations. The procurement standards applicable to grant recipients require grant recipients and subgrantees to take all necessary affirmative steps to assure that minority firms, women's business enterprises and labor surplus area firms are used when possible (see 49 CFR 18.36(e) and 19.44(b)). The grant recipient is also required to submit information as required to the FRA Office of Civil Rights concerning its activities with respect to DBEs in implementing a grant award.

Appendix 3.2.4 Assurances and Certifications

Upon acceptance of the grant by the FRA all certifications and assurances provided by the grant recipient through the application process are incorporated in and become part of the grant agreement. Applicable Assurance and Certification forms include SF 424(A)/(B), SF424(C)/(D) and FRA's Assurances and Certification form. The OMB Standard Forms can be accessed at *http://www.forms.gov.* The FRA Assurances and Certifications Document is available at *http://www.fra.dot.gov/downloads/admin/assurancesand certifications.pdf.*

Appendix 3.2.5 Debarment and Suspension; and Drug-Free Workplace

Grant recipients must obtain certifications on debarment and suspension for all third party contractors and subgrantees and comply with all DOT regulations, ''Nonprocurement Suspension and Debarment'' (2 CFR part 1200) and ''Governmentwide Requirements for Drug-Free Workplace (Grants),'' (49 CFR part 32).

Appendix 3.2.6 Safety Oversight

Grant recipients must comply with any Federal regulations, laws, policy and other guidance that FRA or DOT may issue pertaining to safety oversight in general, and in the performance of any grant award, in particular. FRA has in place a comprehensive system of railroad safety oversight (see 49 CFR part 209 *et seq.*) that is applicable to railroad operations generally.

Appendix 3.2.7 Americans With Disabilities Act (ADA)

Grant recipients must agree to use funds provided under the grant agreement in a manner consistent with the requirements of Title II of the Americans with Disabilities Act (ADA) of 1990, as amended; Section 504 of the Rehabilitation Act of 1973, as amended (29 U.S.C. 794); and both statutes' implementing regulations at 49 CFR parts 27, 37, and 38. DOT (through its delegate FRA) has responsibility to offer technical assistance for the provisions of the ADA about which it issues regulations. 42 U.S.C. 12206(c)(1) reads: ''Each Federal agency that has responsibility under paragraph (2) for implementing this chapter may render technical assistance to individuals and institutions that have rights or duties under the respective subchapters of this chapter for which such agency has responsibility.'' Grant recipients are strongly encouraged to seek FRA's technical assistance with regard to the accessible features of passenger rail systems, to include accessibility at stations and on railcars. FRA believes such technical assistance is essential where interpretation of DOT's regulatory requirements is necessary and/or before the creation of any new rail system.

Appendix 3.2.8 Environmental Protection

All facilities that will be used to perform work under an award shall not be so used unless the facilities are designed and equipped to limit water and air pollution in accordance with all applicable local, State and Federal standards.

Grant recipients will conduct work under an award, and will require that work that is conducted as a result of an award be in compliance with the following provisions, as modified from time to time: Section 114 of the Clean Air Act, 42 U.S.C. 7414, and Section 308 of the Federal Water Pollution Control Act, 33 U.S.C. 1318, and all regulations issued there under. Through the grant agreement, grant recipients will certify that no facilities that will be used to perform work under an award are listed on the List of Violating Facilities maintained by the Environmental Protection Agency (EPA). Grant recipients will be required to notify the Administrator as soon as it or any contractor or subcontractor receives any communication from the EPA indicating that any facility which will be used to perform work pursuant to an award is under consideration to be listed on the EPA's List of Violating Facilities; provided, however, that the grant recipient's duty of notification shall extend only to those communications of which it is aware, or should reasonably have been aware. Grant recipients will need to include or cause to be included in each contract or subcontract entered into, which contract or subcontract exceeds Fifty Thousand Dollars ($50,000.00) in connection with work performed pursuant to an award, the criteria and requirements of this section and an affirmative covenant requiring such contractor or subcontractor to immediately inform the grant recipient upon the receipt of a communication from the EPA concerning the matters set forth herein.

Appendix 3.2.9 National Environmental Policy Act (NEPA)

Specific NEPA-related guidance is included in Section 1.6 of this guidance. The following is a description of FRA's general or standard grant provision on NEPA compliance.

Generally, grant recipients may not expend any of the funds provided in an award on construction or other activities that represent an irretrievable commitment of resources to a particular

course of action affecting the environment until after all environmental and historic preservation analyses required by the National Environmental Policy Act (42 U.S.C. 4332) (NEPA), the National Historic Preservation Act (16 U.S.C. 470(f)) (NHPA), and related laws and regulations have been completed and the FRA has provided the grant recipient with a written notice authorizing them to proceed.

In instances where NEPA approval has not been secured at the time of grant award, grant recipients are required to assist the FRA in its compliance with the provisions of NEPA, the Council on Environmental Quality's regulations implementing NEPA (40 CFR part 1500 *et seq.*), FRA's ''Procedures for Considering Environmental Impacts'' (45 FR 40854, June 16, 1980), as revised May 26, 1999, 64 FR 28545), Section 106 of the NHPA, and related environmental and historic preservation statutes and regulations. As a condition of receiving financial assistance under an award, grant recipients may be required to conduct certain environmental analyses and to prepare and submit to the FRA draft documents required under NEPA, NHPA, and related statutes and regulations (including draft environmental assessments and proposed draft and final environmental impact Statements).

No publicly-owned land from a park, recreational area, or wildlife or waterfowl refuge of national, State, or local significance as determined by the Federal, State, or local officials having jurisdiction thereof, or any land from an historic site of national, State or local significance as so determined by such officials shall be used by grant recipients without the prior written concurrence of FRA. Grant recipients shall assist the FRA in complying with these requirements of 49 U.S.C. 303(c).

Appendix 3.2.10 Environmental Justice

The grant recipient will be required to agree to facilitate compliance with the policies of Executive Order No. 12898, ''Federal Actions to Address Environmental Justice in Minority Populations and Low-Income Populations,'' 42 U.S.C. 4321 note, except to the extent that FRA determines otherwise in writing.

Appendix 3.2.11 Operating and Access Agreements

As discussed in the guidance, grant recipients will be required to reach a written agreement, approved by FRA, with each of the railroads or other entity on whose property the project will be located. Among other things, such railroad/owner agreements shall specify terms and conditions regarding the following issues: responsibility for project design and implementation, project property ownership, maintenance responsibilities, and disposition responsibilities, and the owning entity's commitment to helping to achieve, to the extent it is capable, the anticipated project benefits. If an agreement between the grant recipient and the owner which substantially addresses the above-referenced issues is already in place as of the date of execution of the grant agreement, the grant recipient will be required to submit it to FRA for FRA's review and determination of adequacy. However, if either no agreement is in place as of the date of execution of this Agreement, or if an existing agreement has been determined by FRA to be inadequate, the grant recipient shall, prior to the grant recipient's execution of an agreement with the owner, submit the final draft of such an agreement to FRA for FRA's review and approval. A finding by FRA that the required approved railroad/owner agreement(s) are in place is a prerequisite for reimbursement of construction-related project expenses.

Appendix 3.2.12 Real Property and Equipment Management, Discontinuance of Service, and Disposition Requirements

The grant recipient will be required to ensure the maintenance of project property to the level of utility (including applicable FRA track safety standards) which existed when the project improvements were placed in service for a period of a minimum of 20 years from the date such project property was placed in service. In the event that all Intercity Passenger Rail service making use of the project property is discontinued during the 20-year period, the grant recipient will be required to continue to ensure the maintenance of the project property, as set forth above, for a period of one year to allow for the possible reintroduction of Intercity Passenger Rail service. In the event the grant recipient should fail to ensure the maintenance of project property, as set forth above, for a period of time in excess of six months, the grant recipient will be required to refund to FRA a pro-rata share of the Federal contribution, based upon the percentage of the 20-year period remaining at the time of such original default.

The grant recipient will also be required to acknowledge that the purpose of the project is to benefit Intercity Passenger Rail service. In the event that all Intercity Passenger Rail service making use of the project property is discontinued (for any reason) at any time during a period of 20 years from the date such project property was placed in service, as set forth above, and if such Intercity Passenger Rail service is not reintroduced during a one-year period following the date of such discontinuance, the grant recipient will be required to refund to FRA, no later than 18 months following the date of such discontinuance, a pro-rata share of the Federal contribution, based upon the percentage of the 20-year period remaining at the time of such discontinuance.

Appendix 3.3 ARRA-Specific Grant Requirements (Apply to ARRA-Funded Grants Only)

ARRA contains several specific requirements associated with funding provided in that statute. These include:

Appendix 3.3.1 Prohibited Activities

None of the funds appropriated or otherwise made available in the grant agreement may be used by any State or local government, or any private entity, for any casino or other gambling establishment, aquarium, zoo, golf course, or swimming pool.

Appendix 3.3.2 Recovery Act Funding Announcement

The grant recipient will be required to post a sign at all fixed project locations at the most publicly accessible location and a plaque in all purchased or rehabilitated rail cars announcing that the project or equipment was funded by the U.S. Department of Transportation, Federal Railroad Administration with funds provided through the American Recovery and Reinvestment Act. The configuration of the signs or plaques will be consistent with guidance issued by the Office of Management and Budget and/or the Department of Transportation and approved by the FRA.

Appendix 3.3.3 Certifications

As a condition of award, to the extent applicable, grant recipients must comply with the Certification requirements of ARRA. These include Section 1201 (Maintenance of Effort); Section 1511 (Transparency and Oversight); and Section 1607 (Additional Funding Distribution and Assurance of Appropriate Use of Funds). These Certifications are described in following sections.

Section 1201(a): Maintenance of Effort

By March 19, 2009, State Governors were required to certify to the Secretary of Transportation that the State would maintain its effort with regard to State funding for the types of projects funded by the appropriation, for each amount distributed to a State or a State agency under this program. As part of this Certification, the Governor was required to submit to the Secretary a statement identifying the amount of funds the State planned to expend from State sources as of February 17, 2009, during the period between February 17, 2009 and September 30, 2010, for the types of projects funded by the appropriation. The maintenance of effort requirement in section 1201(a) applies to any grant recipient that is a State government (or agency thereof) that planned, as of February 17, 2009, to expend State funds on the project receiving a High-Speed Rail/Intercity Passenger Rail grant under this guidance during the period between February 17, 2009, and September 30, 2010.

Section 1511: Transparency and Oversight

For grant funds made available to State or local governments for infrastructure investments, the Governor, mayor, or other chief executive, as appropriate, must certify that the infrastructure investment (1) received the full review and vetting required by law; and (2) that the chief executive accepts responsibility that it is an appropriate use of taxpayer dollars. This certification must be executed and posted on a Web site and linked to *http://www.recovery.gov* prior to the recipient of a High-Speed Rail/Intercity Passenger Rail grant receiving grant funds. If the project is not included in the STIP, a separate certification for the potential High-Speed Rail/Intercity Passenger Rail project must be executed, attaching the relevant information or linking to a public Web site where the information may be obtained. This certification must include a description of the investment, the estimated total cost, and the amount of covered funds to be used, and must be posted online and linked to the Web site *http://www.recovery.gov.* The certification must also state that the projects have been properly reviewed and vetted and are an appropriate use of taxpayer dollars.

Section 1607: Additional Funding Distribution and Assurance of Appropriate Use of Funds

Section 1607 required that Governors of States receiving funding under the Recovery Act certify by April 3, 2009, that, for grant funds provided to any State or State agency, the State would request and use the funds provided in the Recovery Act and that such funds would be used to create jobs and promote economic growth. Alternatively, the State legislature could have acted to accept such funds by the adoption of a concurrent resolution. States or State agencies ultimately receiving High-Speed Rail/Intercity Passenger Rail grant funds must ensure that this certification has been completed.

Submission of Certifications Under Sections 1201, 1511, and 1607

All Certifications, once executed, shall be submitted to the Secretary of Transportation, c/o Joel Szabat, Deputy Assistant Secretary for Transportation Policy, at *TigerTeam.Leads@dot.gov*. Certifications may be submitted via e-mail as electronic, scanned copies, with original signed versions to follow via U.S. mail. As required by ARRA, certifications under Section 1511 shall be immediately posted on a Web site and linked to the Web site *http://www.recovery.gov.*

Appendix 3.3.4 Whistleblower Protections

The grant recipient will be required to provide the whistleblower protections required by Section 1553 of ARRA.

Appendix 3.3.5 False Claims Act

The grant recipient and sub-recipients will be required to promptly refer to the DOT's Inspector General credible evidence that a principal, employee, agency, contractor, sub-contractor, or other person has submitted a false claim under the False Claims Act or has committed a criminal or civil violation of laws pertaining to fraud, conflict of interest, bribery, gratuity, or similar misconduct involving ARRA funds.

Appendix 3.3.6 Contracting Provisions

To the maximum extent possible, contracts funded under ARRA shall be awarded as fixed-price contracts through the use of competitive procedures. Grant recipients will be required to provide a summary of any contract awarded with ARRA funds that is not fixed-price and not awarded using competitive procedures for posting on the Recovery Accountability and Transparency Board's Web site.

Appendix 3.4 Program-Specific Grant Requirements

These apply to PRIIA-authorized grants, including ARRA grants only, and do not necessarily pertain to grants under Track 3 and Track 4 ARRA funding is provided through several existing FRA programs principally based on programs authorized in PRIIA, and PRIIA includes a number of additional program-specific grant requirements, including:

Appendix 3.4.1 Buy America

Grant recipients must comply with the Buy America provisions set forth in 49 U.S.C. 24405(a) which specifically provide that the Secretary of Transportation may obligate ARRA funds for a High-Speed Rail/Intercity Passenger Rail or congestion project only if the steel, iron, and manufactured goods used in the project are produced in the United States. The Secretary (or the Secretary's delegate, the FRA Administrator) may waive this requirement if the Secretary finds that applying this requirement would be inconsistent with the public interest; the steel, iron, and goods produced in the United States are not produced in a sufficient and reasonably available amount or are not of a satisfactory quality; rolling stock or power train equipment cannot be bought and delivered in the United States within a reasonable time; or including domestic material will increase the cost of the overall project by more than 25 percent. For purposes of implementing these requirements, in calculating the components' costs, labor costs involved in final assembly shall not be included in the calculation. If the Secretary determines that it is necessary to waive the application of the Buy America requirements, the Secretary is required before the date on which such finding takes effect to publish in the **Federal Register** a detailed written justification as to why the waiver is needed; and provide notice of such finding and an opportunity for public comment on such finding, for a reasonable period of time, not to exceed 15 days. The Secretary may not make a waiver for goods produced in a foreign country if the Secretary, in consultation with the United States Trade Representative, decides that the government of that foreign country has an agreement with the United States Government under which the Secretary has waived the requirement of this subsection, and the government of that foreign country has violated the agreement by discriminating against goods to which this subsection applies that are produced in the United States and to which the agreement applies. The Buy America requirements described in this section shall only apply to projects for which the costs exceed $100,000.

Appendix 3.4.2 Operators Deemed Rail Carriers

A person that conducts rail operations over rail infrastructure constructed or improved with funding provided in whole or in part in a grant made under this program shall be considered a rail carrier as defined in Section 49 U.S.C. 10102(5) for purposes of title 49 of the United States Code and any other statute that adopts the definition found in 49 U.S.C. 10102(5) including the Railroad Retirement Act of 1974 (45 U.S.C. 231 *et seq.*); the Railway Labor Act (43 U.S.C. 151 *et seq.*); and the Railroad Unemployment Insurance Act (45 U.S.C. 351 *et seq.*) (see 49 U.S.C. 24405(b))

Appendix 3.4.3 Railroad Agreements

As a condition of receiving a grant under this program for a project that uses rights-of-way owned by a railroad, the grant recipient shall have in place a written agreement between the grant recipient and the railroad regarding such use and ownership, including any compensation for such use; assurances regarding the adequacy of infrastructure capacity to accommodate both existing and future freight and passenger operations; an assurance by the railroad that collective bargaining agreements with the railroad's employees (including terms regulating the contracting of work) will remain in full force and effect according to their terms for work performed by the railroad on the railroad transportation corridor; and an assurance that the grant recipient complies with liability requirements consistent with 49 U.S.C. 28103. Grant recipients that use rights-of-way owned by a railroad must comply with FRA guidance regarding how to establish a written agreement between the applicant and the railroad regarding use and ownership as discussed in Appendix 3.2.11. (See 49 U.S.C. 24405(c)).

Appendix 3.4.4 Labor Protection

As a condition of receiving a grant under this program for a project that uses rights-of-way owned by a railroad, the grant recipient must agree to comply with the standards of 49 U.S.C. 24312, as such section was in effect on September 1, 2003, with respect to the project in the same manner that Amtrak is required to comply with those standards for construction work financed under an agreement made under 49 U.S.C. 24308(a) and the protective arrangements established under Section 504 of the Railroad Revitalization and Regulatory Reform Act of 1976 (45 U.S.C. 836) with respect to employees affected by actions taken in connection with the project to be financed in whole or in part by grants under this program. (see 49 U.S.C. 24405(c)).

Appendix 3.4.5 Davis-Bacon Act

Projects funded through ARRA are required to comply with the Davis-Bacon Act (40 U.S.C. 3141 *et seq.*). The Davis-Bacon Act is a measure that fixes a floor under wages on Federal government projects and provides, in pertinent part, that the minimum wages to be paid for classes of workers under a contract for the construction, alteration, and/or repair of a Federal public building or public work, must be based upon wage rates determined by the Secretary of Labor to be prevailing for corresponding classes of workers employed on projects of a character similar to the contract work in the civil subdivision of the State in which the work is to be performed.

Two provisos related to the Davis-Bacon Act are included in ARRA related to HSIPR service. The first requires that funded projects must comply with the requirements of subchapter IV of chapter 31 of title 40, United States Code. The second provides that 49 U.S.C. 24405 shall also apply to the funded projects. The first proviso mandates compliance with the Davis-Bacon Act generally since it is included in subchapter IV of Chapter 31 of title 40. The second proviso also mandates compliance the Davis-Bacon Act through subsection 24405(c) which provides that the Secretary shall require as a condition of making any grant that uses rights-of-way owned by a railroad that the applicant agree to comply with the standards of Section 24312 of title 49 with respect to the project in the same manner that Amtrak is required to comply with those standards for construction work financed under an agreement made under 49 U.S.C. 24308(a). Section 24312 provides that Amtrak shall ensure that laborers and mechanics employed by contractors and subcontractors in construction work financed under an agreement made under Section 24308 will be paid wages not less than those prevailing on similar construction in the locality, as determined by the Secretary of Labor under Sections 3141–3144, 3146 and 3147 of title 40 and that wages in a collective bargaining agreement negotiated under the Railway Labor Act are deemed to comply with Sections 3141–3144, 3146, and 3147 of title 40. Section 24308 authorizes Amtrak to enter into agreements with rail carriers or regional transportation authorities to use facilities of and have services provided by the carrier or authority under terms on which the parties agree.

FRA has concluded that the two Davis-Bacon requirements can be reconciled in a manner that allows the HSIPR Program to be implemented in a way that is both reasonable and consistent with current practices. For projects that use or propose to use rights-of-way owned by a railroad, the specific provisions of 24405(c) would apply and applicants would be required to comply with the standards of 49 U.S.C. 24312 (prevailing wages) in the same manner that Amtrak is required to comply with those standards for construction projects it might undertake. It follows that wages in a collective bargaining agreement negotiated under the Railway Labor Act would be deemed to comply with Davis-Bacon Act requirements for these projects. For projects that do not propose to use rights-of-way owned by a railroad, normal Davis-Bacon Act requirements would apply and there would be no specific exemption for wages arrived at through a collective bargaining agreement negotiated under the Railway Labor Act. Wage rates on these projects would have to meet the Secretary of Labor's prevailing wage standards as described above.

Appendix 3.4.6 Project Labor Agreements

Executive Order 13502, Use of Project Labor Agreements for Federal Construction Projects, issued by President Obama on February 6, 2009, authorizes Federal agencies in awarding any contract in connection with large-scale Federal government construction projects to, on a project-by-project basis, require the use of a project labor agreement by a contractor where use of such an agreement will (i) advance the Federal Government's interest in achieving economy and efficiency in Federal procurement, producing labor-management stability, and ensuring compliance with laws and regulations governing safety and health, equal employment opportunity, labor and employment standards, and other matters, and (ii) be consistent with law. At this time, the Executive Order does not apply directly to recipients of financial assistance to either require or preclude the use of a project labor agreement. Rather, the Order directs the Director of OMB, in consultation with the Secretary of Labor and with other officials as appropriate, to provide the President within 180 days of the date of the Order (August 5, 2009) with recommendations about whether broader use of project labor agreements, with respect to both construction

projects undertaken under Federal contracts and construction projects receiving Federal financial assistance, would help to promote the economical, efficient, and timely completion of such projects. FRA will issue additional guidance to applicants following submission of the required report and any further action by the President or OMB.

Appendix 3.4.7 Replacement of Existing Intercity Passenger Rail Service

Grant recipients providing Intercity Passenger Rail transportation that begins operations after October 16, 2008 on a project funded in whole or in part by grants made under this program, that replaces Intercity Passenger Rail service that was provided by Amtrak, unless such service was provided solely by Amtrak to another entity as of such date, are required to enter into a series of agreements with the authorized bargaining agent or agents for adversely affected employees of the predecessor provider. (see 49 U.S.C. 24405(d)).

Appendix 3.5 General Requirements

Appendix 3.5.1 Standard Reporting Requirements

• Progress Reports—Progress reports must accompany each request for payment, and at a minimum are to be submitted quarterly. These reports shall relate the state of completion of items in the scope of work to expenditures of the relevant budget elements. The grant recipient shall furnish the quarterly progress report to the FRA on or before the 30th calendar day of the month following the end of the quarter being reported. Each quarterly report shall set forth concise statements concerning activities relevant to the project, and shall include, but not be limited to, the following: (a) An account of significant progress (findings, events, trends, etc.) made during the reporting period; (b) a description of any technical and/or cost problem(s) encountered or anticipated that will affect completion of the grant within the time and fiscal constraints as set forth in this agreement, together with recommended solutions or corrective action plans (with dates) to such problems, or identification of specific action that is required by the FRA, or a statement that no problems were encountered; and (c) an outline of work and activities planned for the next reporting period.

• Quarterly Financial Status Report (SF–269)—Grant recipients must report obligations and expenditures on a quarterly basis using the SF–269, which is due within 30 days of the end of each calendar quarter (*e.g.,* for quarter ending March 31, the SF–269 is due no later than April 30). A report must be submitted for every quarter of the period of performance, including partial calendar quarters, as well as for periods where no grant activity occurs. The final SF–269 is due 90 days after the end date of the period of performance. Financial Status Reports (SF–269) must be filed online through GrantSolutions.

• Quarterly Federal Cash Transactions Report—Grant recipients will be required to submit a SF–272, Federal Cash Transaction Report (and when necessary the continuation sheet SF–272a), for grants paid by Treasury Check Advances, or Electronic Transfer of Funds. FRA will use this report to monitor cash advanced to the Grantee and to obtain disbursement or outlay information. Forecasts of Federal cash outlays are required in the ''Remarks'' section of the report. Grantees will furnish the quarterly Federal cash transaction report to the FRA on or before the 30th calendar day of the month following the end of the quarter being reported.

• Interim and/or Final Report(s)—Upon project completion, grant recipients will be required to furnish to the FRA a Summary Project Report detailing the results and benefits of the grant recipient's improvement efforts due by the expiration date of the grant.

Appendix 3.5.2 ARRA-Specific Reporting Requirements

• ARRA Section 1201 Report—Periodic Reports—Each grant recipient will be required to submit periodic reports to the FRA as described in this paragraph not later than February 17, 2010, February 17, 2011, and February 17, 2012. The Periodic Reports shall include information describing: (1) The amount of Federal funds appropriated, allocated, obligated, and outlayed under the grant agreement; (2) the number of projects that have been put out to bid under the grant agreement and the amount of Federal funds associated with such projects; (3) the number of projects for which contracts have been awarded under the grant agreement and the amount of Federal funds associated with such contracts; (4) the number of projects for which work has begun under such contracts and the amount of Federal funds associated with such contracts; (5) the number of projects for which work has been completed under such contracts and the amount of Federal funds associated with such contracts; (6) the number of direct, on-project jobs created or sustained by the Federal funds provided for projects under the grant agreement and, to the extent possible, the estimated indirect jobs created or sustained in the associated supplying industries, including the number of jobs created and the total increase in employment since February 17, 2009; and (7) information tracking the actual aggregate expenditures by the grant recipient from its own sources for projects eligible for funding under this agreement during the period beginning on February 17, 2009 through September 30, 2010, as compared to the level of such expenditures that were planned to occur during such period as of February 17, 2009. DOT or FRA may issue additional guidance on the preparation and submission of Periodic Reports.

• Section 1512(c)—Jobs Accountability Reports—Not later than 10 days after the end of each quarter, each grant recipient will be required to submit a Jobs Accountability Report to the FRA that contains: (1) The total amount of ARRA funds received pursuant to this agreement; (2) the amount of ARRA funds received that were expended or obligated to projects or activities; and (3) a detailed list of all projects or activities for which ARRA funds were expended or obligated, including—(A) the name of the project or activity; (B) a description of the project or activity; (C) an evaluation of the completion status of the project or activity; (D) an estimate of the number of jobs created and the number of jobs retained by the project or activity; and (E) detailed information on any subcontracts or subgrants awarded by the grant recipient to include the data elements required to comply with the Federal Funding Accountability and Transparency Act of 2006 (Pub. L. 109–282), allowing aggregate reporting on awards below $25,000 or to individuals, as prescribed by the Director of OMB. OMB may issue additional guidance on the preparation and submission of Jobs Accountability Reports. The grant recipient must also register with the CCR database or complete other registration requirements as determined by the Director of OMB.

• Section 1609: Environmental Reporting—Section 1609(c) of ARRA requires that Federal agencies report via the President (specifically, to the White House Council on Environmental Quality) every 90 days following enactment of ARRA on the status of projects funded under ARRA with respect to compliance with NEPA. Grant recipients may be requested to submit information to assist FRA in completing this report.

• Additional Information—To satisfy the purposes of the ARRA, grant recipients may be required to provide

additional information in response to requests from OMB, the Congressional Budget Office, the Government Accountability Office, or the Department's Inspector General. FRA will inform grant recipients if and when such additional reports or information are required.

Appendix 3.5.3 Audit Requirements

Grant recipients that expend $500,000 or more of Federal funds during their fiscal year are required to submit an organization-wide financial and compliance audit report. The audit must be performed in accordance with U.S. General Accountability Office, Government Auditing Standards, located at *http://www.gao.gov/govaud/ybk01.htm*, and OMB Circular A–133, Audits of States, Local Governments, and Non-Profit Organizations, located at *http://www.whitehouse.gov/omb/circulars/a133/a133.html*. Audit reports are currently to be submitted to the Federal Audit Clearinghouse no later than nine months after the end of the recipient's fiscal year. In addition, FRA and the Comptroller General of the United States shall have access to any books, documents, and records of grant recipients for audit and examination purposes. The grant recipient will also give FRA or the Comptroller, through any authorized representative, access to, and the right to examine all records, books, papers or documents related to the grant. Grant recipients shall require that sub-grantees comply with the audit requirements set forth in OMB Circular A–133. Grant recipients are responsible for ensuring that sub-recipient audit reports are received and for resolving any audit findings.

Appendix 3.5.4 Monitoring Requirements

Grant recipients will be monitored periodically by FRA, both programmatically and financially, to ensure that the project goals, objectives, performance requirements, timelines, milestone completion, budgets, and other related program criteria are being met. Monitoring will be accomplished through a combination of office-based reviews and onsite monitoring visits. Monitoring will involve the review and analysis of the financial, programmatic, performance and administrative issues relative to each program and will identify areas where technical assistance and other support may be needed. The recipient is responsible for monitoring award activities, to include sub-awards, to provide reasonable assurance that the Federal award is administered in compliance with requirements. Responsibilities include the accounting of recipients and expenditures, cash management, maintaining of adequate financial records, and refunding expenditures disallowed by audits.

Appendix 3.5.5 Closeout Process

Project closeout occurs when all required project work and all administrative procedures described in 49 CFR part 18, or 49 CFR part 19, as applicable, have been completed, and when FRA notifies the grant recipient and forwards the final Federal assistance payment, or when FRA acknowledges the grant recipient's remittance of the proper refund. Project closeout shall not invalidate any continuing obligations imposed on the Grantee by an award or by the FRA's final notification or acknowledgment. Within 90 days of the Project completion date or termination by FRA, Grantees agree to submit a final Financial Status Report (Standard Form 269), a certification or summary of project expenses, and third party audit reports, as applicable.

Appendix 3.6 Freedom of Information Act (FOIA)

As a Federal agency, the FRA is subject to the Freedom of Information Act (FOIA) (5 U.S.C. 552), which generally provides that any person has a right, enforceable in court, to obtain access to Federal agency records, except to the extent that such records (or portions of them) are protected from public disclosure by one of nine exemptions or by one of three special law enforcement record exclusions. Grant applications and related materials submitted by applicants pursuant to this guidance would become agency records and thus subject to the FOIA and to public release through individual FOIA requests. ARRA also mandates broad public dissemination of information related to the expenditure of funds through reporting requirements and website postings that are addressed in other sections of this guidance. President Obama's March 20, 2009 Memorandum for the Heads of Executive Departments and Agencies on Ensuring Responsible Spending of Recovery Act Funds mandates the strongest possible efforts to ensure public transparency and accountability of ARRA expenditures. Consistent with these mandates, it is FRA's intention to employ a transparent process in distributing and overseeing the expenditure of ARRA funds. FRA also recognizes that certain information submitted in support of an application for funding in accordance with this guidance could be exempt from public release under FOIA as a result of the application of one of the FOIA exemptions, most particularly Exemption 4, which protects trade secrets and commercial or financial information obtained from a person that is privileged or confidential (5 U.S.C. 552(b)(4)). In the context of this grant program, commercial or financial information obtained from a person could be confidential if disclosure is likely to cause substantial harm to the competitive position of the person from whom the information was obtained (see National Parks & Conservation Ass'n v. Morton, 498 F.2d 765, 770 (D.C. Cir. 1974)). Entities seeking exempt treatment must provide a detailed statement supporting and justifying their request and should follow FRA's existing procedures for requesting confidential treatment in the railroad safety context found at 49 CFR 209.11. As noted in the Department's FOIA implementing regulation (49 CFR part 7), the burden is on the entity requesting confidential treatment to identify all information for which exempt treatment is sought and to persuade the agency that the information should not be disclosed (see 49 CFR 7.17). The final decision as to whether the information meets the standards of Exemption 4 rests with the FRA.

Issued in Washington, DC, on June 17, 2009.

Joseph C. Szabo,

Administrator.

[FR Doc. E9–14692 Filed 6–22–09; 8:45 am]

BILLING CODE 4910–06–P

Reader Aids

Federal Register

Vol. 74, No. 119

Tuesday, June 23, 2009

CUSTOMER SERVICE AND INFORMATION

Federal Register/Code of Federal Regulations	
General Information, indexes and other finding aids	**202–741–6000**
Laws	**741–6000**
Presidential Documents	
Executive orders and proclamations	**741–6000**
The United States Government Manual	**741–6000**
Other Services	
Electronic and on-line services (voice)	**741–6020**
Privacy Act Compilation	**741–6064**
Public Laws Update Service (numbers, dates, etc.)	**741–6043**
TTY for the deaf-and-hard-of-hearing	**741–6086**

ELECTRONIC RESEARCH

World Wide Web

Full text of the daily Federal Register, CFR and other publications is located at: **http://www.gpoaccess.gov/nara/index.html**

Federal Register information and research tools, including Public Inspection List, indexes, and links to GPO Access are located at: **http://www.archives.gov/federal__register**

E-mail

FEDREGTOC-L (Federal Register Table of Contents LISTSERV) is an open e-mail service that provides subscribers with a digital form of the Federal Register Table of Contents. The digital form of the Federal Register Table of Contents includes HTML and PDF links to the full text of each document.

To join or leave, go to **http://listserv.access.gpo.gov** and select *Online mailing list archives, FEDREGTOC-L, Join or leave the list (or change settings);* then follow the instructions.

PENS (Public Law Electronic Notification Service) is an e-mail service that notifies subscribers of recently enacted laws.

To subscribe, go to **http://listserv.gsa.gov/archives/publaws-l.html** and select *Join or leave the list (or change settings);* then follow the instructions.

FEDREGTOC-L and **PENS** are mailing lists only. We cannot respond to specific inquiries.

Reference questions. Send questions and comments about the Federal Register system to: **fedreg.info@nara.gov**

The Federal Register staff cannot interpret specific documents or regulations.

Reminders. Effective January 1, 2009, the Reminders, including Rules Going Into Effect and Comments Due Next Week, no longer appear in the Reader Aids section of the Federal Register. This information can be found online at **http://www.regulations.gov.**

CFR Checklist. Effective January 1, 2009, the CFR Checklist no longer appears in the Federal Register. This information can be found online at **http://bookstore.gpo.gov/.**

FEDERAL REGISTER PAGES AND DATE, JUNE

26077–26280 1
26281–26510 2
26511–26770 3
26771–26932 4
26933–27070 5
27071–27242 8
27243–27422 9
27423–27678 10
27679–27902 11
27903–28148 12
28149–28438 15
28439–28590 16
28591–28862 17
28863–29110 18
29111–29392 19
29393–29588 22
29589–29930 23

CFR PARTS AFFECTED DURING JUNE

At the end of each month, the Office of the Federal Register publishes separately a List of CFR Sections Affected (LSA), which lists parts and sections affected by documents published since the revision date of each title.

2 CFR

1 28149
182 28149

3 CFR

Proclamations:
8387 26929
8387 (Correction) 27677
8388 26931
8389 27067
8390 27069
8391 28593
8392 28595

Administrative Orders:
Memorandums:
Memo. of May 27, 2009 26277
Memo. of June 12, 2009 28591
Memo. of June 8, 2009 28863
Memo. of June 17, 2009 29393
Notices:
Notice of June 12, 2009 28437
Notice of June 18, 2009 29391
Presidential Determinations:
No. 2009-19 of June 5, 2009 27903
No. 2009-20 of June 12, 2009 28865
No. 2009-21 of June 12, 2009 28867

5 CFR

532 28597
1600 29111

Proposed Rules:
894 26302

7 CFR

28 26771
220 28154
301 .....26774, 27071, 27423
319 26511
457 .....26281, 28154
916 28869
917 28869
981 28872
1467 26281

Proposed Rules:
205 26591
319 27456
352 27456
360 27456
361 27456
920 26806
1205 26810
1209 26984
1220 27467

8 CFR

1 26933
100 26933
103 26933
204 26933
207 26933
208 26933
211 26933
212 26933
214 .....26514, 26933
216 26933
236 26933
244 26933
245 26933
248 26933
264 26933
274a 26514, 26933
301 26933
316 26933
320 26933
322 26933
324 26933
327 26933
328 26933
329 26933
330 26933
334 26933
392 26933

10 CFR

50 28112
52 28112
72 .....26285, 27423
170 27642
171 27642

Proposed Rules:
50 .....26303, 27724
52 27724
70 26814
72 .....26310, 27469
110 29614
430 26816
431 26596
440 27945

11 CFR

9430 27905

12 CFR

225 .....26077, 26081
229 26515
337 .....26516, 27679, 27683
370 .....26521, 26941
619 28597
620 28597
621 28597
1410 28156

Proposed Rules:
34 27386
208 27386
365 27386

563 27386
610 27386
617 29143
761 27386
1212 27470
1230 26989
1233 28636
1731 28636
1770 26989

13 CFR

120 ....27243, 27426, 29589

14 CFR

23 26777
25 ....26946, 26948
33 29592
34 26778
36 27076
39 ....26288, 26291, 27684, 27686, 27689, 27691, 27693, 27695, 27698, 27702, 27704, 27906, 27908, 27911, 27913, 27915, 27917, 28439, 29112, 29116, 29118, 29121, 29123, 29126
71 ....27076, 27077, 27078
95 26779
97 ....28156, 28158, 29592, 29593

Proposed Rules:

21 28449
23 26818
27 28449
39 ....26312, 26315, 26317, 26322, 26994, 27254, 27257, 27260, 27474, 27476, 27725, 27946, 29144, 29148, 29630, 29632

16 CFR

1500 27248

Proposed Rules:

321 ....26118, 26130
322 ....26118, 26130
437 29149

17 CFR

211 27427
239 26782
274 26782

Proposed Rules:

200 29024
232 29024
240 29024
249 29024
274 29024

19 CFR

101 28601
122 28601

20 CFR

Proposed Rules:

416 27727
617 27262
618 27262
665 27262
671 27262

21 CFR

510 26951
520 ....27706, 28874
522 26951
524 26782
558 27919

23 CFR

192 28441
470 28441
625 28441
634 ....28160, 28441
650 28441
655 28441
772 28441
971 28441
972 28441
973 28441
1206 28441
1208 28441
1210 28441
1215 28441

Proposed Rules:

635 29634

26 CFR

1 ....27079, 27080, 27868, 27920
20 ....27079, 27080
25 27080
602 27868

Proposed Rules:

1 27947
20 26597

27 CFR

9 29395
40 29401
41 29401
44 29401
45 29401

Proposed Rules:

40 29433
41 29433
44 29433
45 29433

28 CFR

0 29128
2 28602

Proposed Rules:

16 26598

29 CFR

4001 27080
4022 28161
4044 28161
4901 27080
4902 27080

30 CFR

49 28606

Proposed Rules:

74 27263
250 28639

31 CFR

Ch. V 29742
30 28394
285 ....27432, 27707
356 26084
538 27433

Proposed Rules:

103 26996
285 27730

32 CFR

706 29420

Proposed Rules:

199 29435

33 CFR

1 27435
25 27435
66 27435
70 27435
72 27435
100 27435
110 27435
117 ....26087, 26293, 26294, 26295, 26296, 26952, 27249, 27442, 29422
133 27435
135 27435
136 27435
137 27435
138 27435
155 27435
157 27435
161 27435
165 ....26087, 26089, 26297, 26782, 26785, 26786, 26954, 27435, 27932, 27934, 27936, 27938, 28163, 28165, 28609, 28612, 28614, 29129, 29131, 29134, 29422, 29423, 29435, 29428
166 27435

Proposed Rules:

100 ....26138, 26326, 27478, 29436
110 ....26328, 27000, 27948
117 26820
146 29439
165 ....26138, 26823, 27481, 27953, 28199, 29151, 29447

36 CFR

223 26091
261 26091

Proposed Rules:

1253 27956

38 CFR

1 29430
3 ....26956, 26958
4 26958
9 26788
38 26092

39 CFR

20 26959
3020 26789

40 CFR

35 28443
51 ....26098, 29595
52 ....26098, 26099, 26103, 26525, 27442, 27708, 27711, 27714, 27716, 28444, 28447, 28616
55 28875
59 29595
62 ....27444, 27718, 27720, 27722
72 27940
73 27940
74 27940
77 27940
78 27940
112 29136
180 ....26527, 26536, 26543, 27447, 28616
300 26962

Proposed Rules:

51 ....27002, 28451
52 ....26141, 26600, 27084, 27731, 27737, 27738, 27957, 27973, 28467, 29450, 29451, 29452
60 28451
61 28451
62 27444
63 ....26142, 27265, 28451
81 ....27957, 27973
93 27085
191 28468
194 28468
300 27003
799 28654

42 CFR

412 26546

Proposed Rules:

8 29153
412 26600
441 29453

44 CFR

64 ....26569, 28624
65 ....26572, 26577, 28627
67 ....28166, 28629

Proposed Rules:

67 ....26636, 26640, 28202

45 CFR

681 26793

47 CFR

73 ....26299, 26300, 26801, 26802, 27454, 27944
74 ....26300, 29607
78 29607
90 27455
400 26965

Proposed Rules:

1 26329
64 28471
73 ....26826, 27484, 27985
74 29636
78 29636

48 CFR

Ch. 1 ....28426, 28434
2 26981
22 26981
25 28426
32 28430
43 28430
52 ....26981, 28426, 28430
53 28430
546 26107
552 26107

Proposed Rules:

2 26646
4 26646
12 26646
39 26646
52 26646
1545 29650
1552 29650

49 CFR

1 26981
572 29862

Proposed Rules:

107 29456
387 27485
541 27493
575 29452
578 28204

581 28209

50 CFR

17 ....26488, 28776, 29344
216 26580
218 ....28328, 28349, 28370
224 29344
226 29300
622 29430
635 ....26110, 26803, 28635
648 ....26589, 27251, 27252
660 ....26983, 29431
665 27253
679 ....26804, 26805

Proposed Rules:

17 ....27004, 27266, 27271, 27588, 29456
226 27988
229 27739
300 ....26160, 29158
622 ....26170, 26171, 26827, 26829
635 26174
665 29158
679 ....26183, 27498

LIST OF PUBLIC LAWS

This is a continuing list of public bills from the current session of Congress which have become Federal laws. It may be used in conjunction with "P L U S" (Public Laws Update Service) on 202–741–6043. This list is also available online at *http://www.archives.gov/federal-register/laws.html*.

The text of laws is not published in the **Federal Register** but may be ordered in "slip law" (individual pamphlet) form from the Superintendent of Documents, U.S. Government Printing Office, Washington, DC 20402 (phone, 202–512–1808). The text will also be made available on the Internet from GPO Access at *http://www.gpoaccess.gov/plaws/index.html*. Some laws may not yet be available.

H.R. 663/P.L. 111–26
To designate the facility of the United States Postal Service located at 12877 Broad Street in Sparta, Georgia, as the "Yvonne Ingram-Ephraim Post Office Building". (June 19, 2009; 123 Stat. 1771)

H.R. 918/P.L. 111–27
To designate the facility of the United States Postal Service located at 300 East 3rd Street in Jamestown, New York, as the "Stan Lundine Post Office Building". (June 19, 2009; 123 Stat. 1772)

H.R. 1284/P.L. 111–28
To designate the facility of the United States Postal Service located at 103 West Main Street in McLain, Mississippi, as the "Major Ed W. Freeman Post Office". (June 19, 2009; 123 Stat. 1773)

H.R. 1595/P.L. 111–29
To designate the facility of the United States Postal Service located at 3245 Latta Road in Rochester, New York, as the "Brian K. Schramm Post Office Building". (June 19, 2009; 123 Stat. 1774)

H.R. 2675/P.L. 111–30
Antitrust Criminal Penalty Enhancement and Reform Act of 2004 Extension Act (June 19, 2009; 123 Stat. 1775)

Last List June 4, 2009

Public Laws Electronic Notification Service (PENS)

PENS is a free electronic mail notification service of newly enacted public laws. To subscribe, go to *http://listserv.gsa.gov/archives/publaws-l.html*

Note: This service is strictly for E-mail notification of new laws. The text of laws is not available through this service. **PENS** cannot respond to specific inquiries sent to this address.