Federal Register

8–17–09 Monday
Vol. 74 No. 157 Aug. 17, 2009

Pages 41327–41580

The **FEDERAL REGISTER** (ISSN 0097–6326) is published daily, Monday through Friday, except official holidays, by the Office of the Federal Register, National Archives and Records Administration, Washington, DC 20408, under the Federal Register Act (44 U.S.C. Ch. 15) and the regulations of the Administrative Committee of the Federal Register (1 CFR Ch. I). The Superintendent of Documents, U.S. Government Printing Office, Washington, DC 20402 is the exclusive distributor of the official edition. Periodicals postage is paid at Washington, DC.

The **FEDERAL REGISTER** provides a uniform system for making available to the public regulations and legal notices issued by Federal agencies. These include Presidential proclamations and Executive Orders, Federal agency documents having general applicability and legal effect, documents required to be published by act of Congress, and other Federal agency documents of public interest.

Documents are on file for public inspection in the Office of the Federal Register the day before they are published, unless the issuing agency requests earlier filing. For a list of documents currently on file for public inspection, see *www.federalregister.gov.*

The seal of the National Archives and Records Administration authenticates the Federal Register as the official serial publication established under the Federal Register Act. Under 44 U.S.C. 1507, the contents of the **Federal Register** shall be judicially noticed.

The **Federal Register** is published in paper and on 24x microfiche. It is also available online at no charge as one of the databases on GPO Access, a service of the U.S. Government Printing Office.

The online edition of the **Federal Register** *www.gpoaccess.gov/nara,* available through GPO Access, is issued under the authority of the Administrative Committee of the Federal Register as the official legal equivalent of the paper and microfiche editions (44 U.S.C. 4101 and 1 CFR 5.10). It is updated by 6 a.m. each day the **Federal Register** is published and includes both text and graphics from Volume 59, Number 1 (January 2, 1994) forward.

For more information about GPO Access, contact the GPO Access User Support Team, call toll free 1-888-293-6498; DC area 202-512-1530; fax at 202-512-1262; or via e-mail at *gpoaccess@gpo.gov.* The Support Team is available between 7:00 a.m. and 9:00 p.m. Eastern Time, Monday–Friday, except official holidays.

The annual subscription price for the **Federal Register** paper edition is $749 plus postage, or $808, plus postage, for a combined **Federal Register, Federal Register** Index and List of CFR Sections Affected (LSA) subscription; the microfiche edition of the **Federal Register** including the **Federal Register** Index and LSA is $165, plus postage. Six month subscriptions are available for one-half the annual rate. The prevailing postal rates will be applied to orders according to the delivery method requested. The price of a single copy of the daily **Federal Register,** including postage, is based on the number of pages: $11 for an issue containing less than 200 pages; $22 for an issue containing 200 to 400 pages; and $33 for an issue containing more than 400 pages. Single issues of the microfiche edition may be purchased for $3 per copy, including postage. Remit check or money order, made payable to the Superintendent of Documents, or charge to your GPO Deposit Account, VISA, MasterCard, American Express, or Discover. Mail to: U.S. Government Printing Office—New Orders, P.O. Box 979050, St. Louis, MO 63197-9000; or call toll free 1-866-512-1800, DC area 202-512-1800; or go to the U.S. Government Online Bookstore site, see *bookstore.gpo.gov.*

There are no restrictions on the republication of material appearing in the **Federal Register.**

How To Cite This Publication: Use the volume number and the page number. Example: 74 FR 12345.

Postmaster: Send address changes to the Superintendent of Documents, Federal Register, U.S. Government Printing Office, Washington, DC 20402, along with the entire mailing label from the last issue received.

SUBSCRIPTIONS AND COPIES

PUBLIC

Subscriptions:

Paper or fiche	**202–512–1800**
Assistance with public subscriptions	**202–512–1806**
General online information	**202–512–1530; 1–888–293–6498**

Single copies/back copies:

Paper or fiche	**202–512–1800**
Assistance with public single copies	**1–866–512–1800 (Toll-Free)**

FEDERAL AGENCIES

Subscriptions:

Paper or fiche	**202–741–6005**
Assistance with Federal agency subscriptions	**202–741–6005**

FEDERAL REGISTER WORKSHOP

THE FEDERAL REGISTER: WHAT IT IS AND HOW TO USE IT

FOR: Any person who uses the Federal Register and Code of Federal Regulations.

WHO: Sponsored by the Office of the Federal Register.

WHAT: Free public briefings (approximately 3 hours) to present:

1. The regulatory process, with a focus on the Federal Register system and the public's role in the development of regulations.
2. The relationship between the Federal Register and Code of Federal Regulations.
3. The important elements of typical Federal Register documents.
4. An introduction to the finding aids of the FR/CFR system.

WHY: To provide the public with access to information necessary to research Federal agency regulations which directly affect them. There will be no discussion of specific agency regulations.

WHEN: Tuesday, September 15, 2009
9:00 a.m.–12:30 p.m.

WHERE: Office of the Federal Register
Conference Room, Suite 700
800 North Capitol Street, NW.
Washington, DC 20002

RESERVATIONS: (202) 741–6008

Printed on recycled paper.

Contents

Federal Register

Vol. 74, No. 157

Monday, August 17, 2009

Agriculture Department
See Animal and Plant Health Inspection Service
See Forest Service

Animal and Plant Health Inspection Service
NOTICES
Meetings:
Wood Packaging Material Used in Domestic Commerce; Pest Mitigation Relating to Firewood Movement, 41368–41369

Centers for Disease Control and Prevention
NOTICES
Meetings:
Advisory Board on Radiation and Worker Health, 41450–41451
Advisory Committee to the Director, 41447
Disease, Disability, and Injury Prevention and Control Special Emphasis Panel, 41451
Subcommittee for Dose Reconstruction Reviews, Advisory Board on Radiation and Worker Health, National Institute for Occupational Safety and Health, 41446–41447

Coast Guard
RULES
Safety Zones:
Neptune Deep Water Port, Atlantic Ocean, Boston, MA, 41334–41336

Commerce Department
See Economic Development Administration
See Foreign–Trade Zones Board
See Industry and Security Bureau
See International Trade Administration
See National Institute of Standards and Technology
See National Oceanic and Atmospheric Administration
NOTICES
Agency Information Collection Activities; Proposals, Submissions, and Approvals, 41369–41370
Industry Outreach in Milwaukee, WI, for Climate Change Negotiations under the UNFCCC, 41370
Meetings:
Environmental Industry Innovation Event, 41370

Consumer Product Safety Commission
NOTICES
Statement of Policy:
Testing of Component Parts With Respect to Section 108 of the Consumer Product Safety Improvement Act, 41400

Department of Transportation
See Pipeline and Hazardous Materials Safety Administration

Economic Development Administration
NOTICES
Petitions by Firms for Determination of Eligibility to Apply for Trade Adjustment Assistance, 41398–41399

Education Department
NOTICES
Agency Information Collection Activities; Proposals, Submissions, and Approvals, 41400–41402
American Recovery and Reinvestment Act of 2009, etc.:
Proposed Adjustments to Statutory Caps on State Administration, 41402–41406
American Recovery and Reinvestment Act of 2009:
Impact Aid Discretionary Construction Program; Applications for New Awards, 41407–41411

Energy Department
See Federal Energy Regulatory Commission
NOTICES
Agency Information Collection Activities; Proposals, Submissions, and Approvals, 41411–41412
Meetings:
Biological and Environmental Research Advisory Committee, 41412–41413
Environmental Management Site–Specific Advisory Board, Hanford, 41412
Proposed Subsequent Arrangement, 41413

Environmental Protection Agency
RULES
Interim Final Determination to Stay and Defer Sanctions: Pinal County, AZ, 41340–41341
National Oil and Hazardous Substance Pollution Contingency Plan; National Priorities List, 41341–41345
PROPOSED RULES
National Oil and Hazardous Substance Pollution Contingency Plan; National Priorities List, 41361–41362
Regulations of Fuels and Fuel Additives:
Changes to Renewable Fuel Standard Program; Availability of Expert Peer Review Record, 41359–41361
Revisions to the Arizona State Implementation Plan; Pinal County, 41357–41359
NOTICES
Environmental Impact Statements; Availability, etc.:
Weekly Receipt, 41430–41431
Planning Guidance for Recovery Following Biological Incidents; Draft Availabilty, 41431–41432

Executive Office of the President
See Science and Technology Policy Office
See Trade Representative, Office of United States

Export–Import Bank
NOTICES
Agency Information Collection Activities; Proposals, Submissions, and Approvals, 41432–41434

Federal Aviation Administration
RULES
Airworthiness Directives:
Honeywell International Inc. TPE331 10 and TPE331 11 Series Turboprop Engines, 41327–41328
PROPOSED RULES
Certification of Turbojets, 41522–41556

NOTICES
Meetings:
RTCA Special Committee 206/EUROCAE WG 76 Plenary, 41484

Federal Communications Commission
NOTICES
Agency Information Collection Activities; Proposals, Submissions, and Approvals, 41434–41436

Federal Energy Regulatory Commission
NOTICES
Applications:
Clean River Power MR–1, LLC, 41415–41416
Clean River Power MR–2, LLC, 41414–41415
Clean River Power MR–3, LLC, 41416
Clean River Power MR–4, LLC, 41420
Clean River Power MR–5, LLC, 41415
Clean River Power MR–6, LLC, 41420–41421
Clean River Power MR–7, LLC, 41414
Clean River Power MR–8, LLC, 41416
Clean River Power MR–9, LLC, 41413
Julian Griggs Dam Water Power Project, LLC, 41414
Lock + TM Hydro Friends Fund X, LLC, 41416–41417
Lock + TM Hydro Friends Fund XI, LLC, 41422
Lock + TM Hydro Friends Fund XII, LLC, 41421
Lock + TM Hydro Friends Fund XIII, LLC, 41417–41418
McGinnis, Inc., 41417–41418, 41421
Natural Gas Pipeline Co. of America LLC, 41422–41423
Ocean Renewable Power Co., LLC, 41418–41419
South Carolina Electric & Gas Co., 41419–41420
Combined Notice of Filings, 41423–41428
Environmental Impact Statements; Availability, etc.:
Appalachian Power Co., 41429
Filings:
Wyoming Interstate Co., Ltd., 41429
Initial Market–Based Rate Filings:
Torofino Trading, LLC, 41429–41430
Petition to Terminate Stipulation and Consent Agreements:
Ozark Gas Transmission, LLC, 41430

Federal Motor Carrier Safety Administration
NOTICES
Qualification of Drivers; Exemption Applications; Diabetes, 41486–41489

Federal Railroad Administration
PROPOSED RULES
Bridge Safety Standards, 41558–41579

Federal Reserve System
NOTICES
Formations of, Acquisitions by, and Mergers of Bank Holding Companies, 41436

Fish and Wildlife Service
RULES
2009–2010 Hunting and Sport Fishing Regulations for the Upper Mississippi River National Wildlife and Fish Refuge, 41351–41356
NOTICES
Receipt of Applications for Permit, 41454–41455

Food and Drug Administration
NOTICES
Determination:
DEMADEX (Torsemide) Injection Was Not Withdrawn From Sale for Reasons of Safety or Effectiveness, 41437–41438
Draft Guidance for Industry:
Labeling of Certain Beers Subject to the Labeling Jurisdiction of the Food and Drug Administration; Availability, etc., 41438–41440
Meetings:
Vaccines and Related Biological Products Advisory Committee, 41449–41450

Foreign–Trade Zones Board
NOTICES
Approval for Expanded Manufacturing Authority, Foreign–Trade Subzone 124E:
Marathon Petroleum Co. LLC (Oil Refinery), Garyville, LA, 41372
Approval for Manufacturing Authority, Foreign–Trade Zone 122:
Excalibar Minerals, LLC (Barite Milling), Corpus Christi, TX, 41372–41373
Approval for Manufacturing Authority:
CNH America, LLC (Construction and Agricultural Equipment), Fargo, ND, 41373
Expansion of Foreign–Trade Zone 57:
Charlotte, NC, Area, 41374
Expansion of Foreign–Trade Zone 8:
Toledo, OH, 41374
Foreign–Trade Zone 49: Newark, New Jersey Area, Application for Subzone Status:
Swatch Group (U.S.) Inc. (Watches, Jewelry Products and Leather Goods), Secaucus, NJ, 41382
Grant of Authority For Subzone Status:
Hoku Materials, Inc. (Polysilicon), Pocatello, ID, 41382

Forest Service
NOTICES
Environmental Impact Statements; Availability, etc.:
Plumas National Forest; California; Flea Project (Renamed Concow Hazardous Fuels Reduction Project), 41366–41368
Meetings:
Ravalli County Resource Advisory Committee, 41369

Health and Human Services Department
See Centers for Disease Control and Prevention
See Food and Drug Administration
See National Institutes of Health
NOTICES
Meetings:
Secretary's Advisory Committee on Genetics, Health, and Society, 41436–41437
Sterilization of Persons in Federally Assisted Family Planning Projects (July 17, 2009); Correction, 41437

Homeland Security Department
See Coast Guard
RULES
Revision of Department of Homeland Security Acquisition Regulation:
Restrictions on Foreign Acquisition (HSAR Case 2009–004), 41346–41351
NOTICES
Planning Guidance for Recovery Following Biological Incidents; Draft Availabilty, 41431–41432
Video Quality in Public Safety Conference, 41451–41452

Housing and Urban Development Department
NOTICES
Agency Information Collection Activities; Proposals, Submissions, and Approvals, 41452

Indian Affairs Bureau
RULES
Job Placement and Training, 41328–41334

Industry and Security Bureau
NOTICES
Meetings:
Materials Technical Advisory Committee, 41397–41398

Interior Department
See Fish and Wildlife Service
See Indian Affairs Bureau
See Reclamation Bureau
See Special Trustee for American Indians Office

International Trade Administration
NOTICES
Final Results of Antidumping Duty Administrative Review and New Shipper Reviews:
Wooden Bedroom Furniture from the People's Republic of China, 41374–41382

Justice Department
NOTICES
Consent Decree:
United States et al. v. Ohio Edison Co., et al., 41455

National Aeronautics and Space Administration
NOTICES
Intent to Grant Partially Exclusive License, 41455

National Highway Traffic Safety Administration
PROPOSED RULES
Insurer Reporting Requirements; List of Insurers Required to File Reports, 41362–41365
NOTICES
Petition for Exemption from the Federal Motor Vehicle Motor Theft Prevention Standard:
Toyota Motor North America, Inc., 41484–41485

National Institute of Standards and Technology
NOTICES
Agency Information Collection Activities; Proposals, Submissions, and Approvals, 41371–41372

National Institutes of Health
NOTICES
Government–Owned Inventions; Availability for Licensing, 41440–41445
Meetings:
National Center for Research Resources, 41448
National Center on Minority Health and Health Disparities, 41447–41448
National Heart, Lung, and Blood Institute, 41450
National Institute of Allergy and Infectious Diseases, 41448–41449
National Institute of Dental and Craniofacial Research, 41449
National Institute of Neurological Disorders and Stroke, 41446
Secretary's Advisory Committee on Genetics, Health, and Society, 41446

National Oceanic and Atmospheric Administration
NOTICES
Endangered and Threatened Species:
Take of Anadromous Fish, 41373–41374
Incidental Takes of Marine Mammals During Specified Activities:
Low–Energy Marine Seismic Survey in Northwest Atlantic Ocean (August 2009), 41382–41397
Meetings:
New England Fishery Management Council, 41398

Nuclear Regulatory Commission
NOTICES
Confirmatory Order:
Westinghouse Electric Co., LLC, 41455–41458
Environmental Impact Statements; Availability, etc.:
Curtis Bay Depot Facility, Baltimore, MD; License Amendment to Source Materials License, 41459–41461
West Virginia School of Osteopathic Medicine's Facility, Lewisburg, WV, 41458–41459
License Renewal Interim Staff Guidance LR–ISG–2007–01:
License Renewal Interim Staff Guidance Process, Revision 1; Availability, 41461–41463
Meetings; Sunshine Act, 41463

Office of United States Trade Representative
See Trade Representative, Office of United States

Pipeline and Hazardous Materials Safety Administration
NOTICES
Agency Information Collection Activities; Proposals, Submissions, and Approvals, 41496–41520

Postal Regulatory Commission
RULES
Global Plus 1 Contracts, 41336–41340

Reclamation Bureau
NOTICES
Environmental Impact Statements; Availability, etc.:
Proposed Water Service Contract, El Dorado County Water Agency, El Dorado County, CA, 41453–41454

Science and Technology Policy Office
NOTICES
Planning Guidance for Recovery Following Biological Incidents; Draft Availabilty, 41431–41432

Securities and Exchange Commission
NOTICES
Application and Temporary Order:
GE Asset Management Inc. and GE Investment Distributors Inc., 41464–41466
Meetings; Sunshine Act, 41466
Self-Regulatory Organizations; Proposed Rule Changes:
NYSE Arca, Inc., 41478–41479
BATS Exchange, Inc., 41477–41478
Financial Industry Regulatory Authority, Inc., 41470–41472
NASDAQ OMX PHLX, Inc., 41466–41468, 41472–41477
NYSE Arca, Inc., 41468–41470, 41474–41475

Small Business Administration
NOTICES
Disaster Declarations:
Nebraska, 41464
North Dakota, 41463–41464

Special Trustee for American Indians Office
NOTICES
Agency Information Collection Activities; Proposals, Submissions, and Approvals, 41452–41453

State Department
NOTICES
Agency Information Collection Activities; Proposals, Submissions, and Approvals, 41479–41482
Culturally Significant Objects Imported for Exhibition Determinations:
Korean Art, 41482
Designation of Specially Designated Global Terrorists:
Revolutionary Struggle aka Epanastatikos Aghonas, 41482

Thrift Supervision Office
NOTICES
Agency Information Collection Activities; Proposals, Submissions, and Approvals, 41489–41490

Trade Representative, Office of United States
NOTICES
Caribbean Basin Economic Recovery Act and the Caribbean Basin Trade Partnership Act:
Report to Congress; Request for Public Comments, 41482–41483

Transportation Department
See Federal Aviation Administration
See Federal Motor Carrier Safety Administration
See Federal Railroad Administration
See National Highway Traffic Safety Administration
See Pipeline and Hazardous Materials Safety Administration

Treasury Department
See Thrift Supervision Office

Veterans Affairs Department
NOTICES
Privacy Act; Systems of Records, 41490–41493

Separate Parts In This Issue

Part II
Transportation Department, Pipeline and Hazardous Materials Safety Administration, 41496–41520

Part III
Transportation Department, Federal Aviation Administration, 41522–41556

Part IV
Transportation Department, Federal Railroad Administration, 41558–41579

Reader Aids

Consult the Reader Aids section at the end of this page for phone numbers, online resources, finding aids, reminders, and notice of recently enacted public laws.

To subscribe to the Federal Register Table of Contents LISTSERV electronic mailing list, go to http://listserv.access.gpo.gov and select Online mailing list archives, FEDREGTOC-L, Join or leave the list (or change settings); then follow the instructions.

CFR PARTS AFFECTED IN THIS ISSUE

A cumulative list of the parts affected this month can be found in the Reader Aids section at the end of this issue.

14 CFR
39.....41327
Proposed Rules:
1.....41522
23.....41522

25 CFR
26.....41328
27.....41328

33 CFR
165.....41334

39 CFR
3020.....41336

40 CFR
52.....41340
300.....41341
Proposed Rules:
52.....41357
80.....41359
300.....41361

48 CFR
3025.....41346
3052.....41346

49 CFR
Proposed Rules:
213.....41558
237.....41558
544.....41362

50 CFR
25.....41351
32.....41351

Rules and Regulations

Federal Register

Vol. 74, No. 157

Monday, August 17, 2009

This section of the FEDERAL REGISTER contains regulatory documents having general applicability and legal effect, most of which are keyed to and codified in the Code of Federal Regulations, which is published under 50 titles pursuant to 44 U.S.C. 1510.

The Code of Federal Regulations is sold by the Superintendent of Documents. Prices of new books are listed in the first FEDERAL REGISTER issue of each week.

DEPARTMENT OF TRANSPORTATION

Federal Aviation Administration

14 CFR Part 39

[Docket No. FAA–2009–0555; Directorate Identifier 2009–NE–18–AD; Amendment 39–15996; AD 2009–17–05]

RIN 2120–AA64

Airworthiness Directives; Honeywell International Inc. TPE331–10 and TPE331–11 Series Turboprop Engines

AGENCY: Federal Aviation Administration (FAA), DOT.

ACTION: Final rule; request for comments.

SUMMARY: The FAA is adopting a new airworthiness directive (AD) for Honeywell International Inc. TPE331–10 and TPE331–11 series turboprop engines. This AD requires removing certain first stage turbine disks from service. This AD results from a report of an uncontained failure of a first stage turbine disk that had a metallurgical defect. We are issuing this AD to prevent uncontained failure of the first stage turbine disk and damage to the airplane.

DATES: This AD becomes effective September 1, 2009. We must receive any comments on this AD by October 16, 2009.

ADDRESSES: Use one of the following addresses to comment on this AD:

- *Federal eRulemaking Portal:* Go to *http://www.regulations.gov* and follow the instructions for sending your comments electronically.
- *Mail:* U.S. Docket Management Facility, Department of Transportation, 1200 New Jersey Avenue, SE., West Building Ground Floor, Room W12–140, Washington, DC 20590–0001.
- *Hand Delivery:* Deliver to Mail address above between 9 a.m. and 5 p.m., Monday through Friday, except Federal holidays.
- *Fax:* (202) 493–2251.

Contact Honeywell International Inc., 111 S. 34th Street, Phoenix, AZ 85034–2802; Web site: *http://portal.honeywell.com* for the service information identified in this AD.

FOR FURTHER INFORMATION CONTACT: Joseph Costa, Aerospace Engineer, Los Angeles Aircraft Certification Office, FAA, Transport Airplane Directorate, 3960 Paramount Blvd., Lakewood, CA 90712–4137; *e-mail: joseph.costa@faa.gov*; telephone (562) 627–5246; fax (562) 627–5210.

SUPPLEMENTARY INFORMATION: In May 2008, we received a report of an uncontained separation of a first stage turbine disk, part number (P/N) 3107079–1. The disk was installed in a TPE331–11U turboprop engine. That disk, which has a 20,000-cycle life, failed after accumulating 8,314 cycles-in-service. The fracture revealed a large melt-related oxide cluster inclusion in the web area of the disk, which occurred during the forging alloy melting process. The disk was produced from Waspaloy material, from Heat Lot 9–7121, which was melted by Special Metals in 1980. We have determined that five turbine disks that were next to the failed disk during the billet-forging process may also contain part of the same melt-related oxide cluster inclusion. This condition, if not corrected, could result in uncontained failure of the first stage turbine disks made from these billets and damage to the airplane.

FAA's Determination and Requirements of This AD

The unsafe condition described previously is likely to exist or develop on other Honeywell International Inc. TPE331–10 and TPE331–11 series turboprop engines of the same type design with the affected first stage turbine disks installed. For that reason, we are issuing this AD to prevent uncontained failure of the first stage turbine disk and damage to the airplane. This AD requires removal from service of first stage turbine disks, P/Ns 3101520–1 and 3107079–1, serial numbers 2–03501–2299, 2–03501–2300, 2–03501–2301, 2–03501–2302, and 2–03501–2304, within 25 flight hours or 25 cycles-in-service after the effective date of this AD, whichever occurs first.

FAA's Determination of the Effective Date

Since an unsafe condition exists that requires the immediate adoption of this AD, we have found that notice and opportunity for public comment before issuing this AD are impracticable, and that good cause exists for making this amendment effective in less than 30 days.

Comments Invited

This AD is a final rule that involves requirements affecting flight safety and was not preceded by notice and an opportunity for public comment; however, we invite you to send us any written relevant data, views, or arguments regarding this AD. Send your comments to an address listed under **ADDRESSES**. Include ''AD Docket No. FAA–2009–0555; Directorate Identifier 2009–NE–18–AD'' in the subject line of your comments. We specifically invite comments on the overall regulatory, economic, environmental, and energy aspects of the rule that might suggest a need to modify it.

We will post all comments we receive, without change, to *http://www.regulations.gov*, including any personal information you provide. We will also post a report summarizing each substantive verbal contact with FAA personnel concerning this AD. Using the search function of the Web site, anyone can find and read the comments in any of our dockets, including, if provided, the name of the individual who sent the comment (or signed the comment on behalf of an association, business, labor union, etc.). You may review the DOT's complete Privacy Act Statement in the **Federal Register** published on April 11, 2000 (65 FR 19477–78).

Examining the AD Docket

You may examine the AD docket on the Internet at *http://www.regulations.gov*; or in person at the Docket Operations office between 9 a.m. and 5 p.m., Monday through Friday, except Federal holidays. The AD docket contains this AD, the regulatory evaluation, any comments received, and other information. The street address for the Docket Operations office (telephone (800) 647–5527) is the same as the Mail address provided in the **ADDRESSES** section. Comments will be available in the AD docket shortly after receipt.

Authority for This Rulemaking

Title 49 of the United States Code specifies the FAA's authority to issue rules on aviation safety. Subtitle I, Section 106, describes the authority of the FAA Administrator. Subtitle VII, Aviation Programs, describes in more detail the scope of the Agency's authority.

We are issuing this rulemaking under the authority described in Subtitle VII, Part A, Subpart III, Section 44701, ''General requirements.'' Under that section, Congress charges the FAA with promoting safe flight of civil aircraft in air commerce by prescribing regulations for practices, methods, and procedures the Administrator finds necessary for safety in air commerce. This regulation is within the scope of that authority because it addresses an unsafe condition that is likely to exist or develop on products identified in this rulemaking action.

Regulatory Findings

We have determined that this AD will not have federalism implications under Executive Order 13132. This AD will not have a substantial direct effect on the States, on the relationship between the national Government and the States, or on the distribution of power and responsibilities among the various levels of government.

For the reasons discussed above, I certify that this AD:

1. Is not a ''significant regulatory action'' under Executive Order 12866;
2. Is not a ''significant rule'' under the DOT Regulatory Policies and Procedures (44 FR 11034, February 26, 1979); and
3. Will not have a significant economic impact, positive or negative, on a substantial number of small entities under the criteria of the Regulatory Flexibility Act.

We prepared a summary of the costs to comply with this AD and placed it in the AD Docket. You may get a copy of this summary at the address listed under **ADDRESSES**.

List of Subjects in 14 CFR Part 39

Air transportation, Aircraft, Aviation safety, Safety.

Adoption of the Amendment

■ Under the authority delegated to me by the Administrator, the Federal Aviation Administration amends part 39 of the Federal Aviation Regulations (14 CFR part 39) as follows:

PART 39—AIRWORTHINESS DIRECTIVES

■ 1. The authority citation for part 39 continues to read as follows:

Authority: 49 U.S.C. 106(g), 40113, 44701.

§ 39.13 [Amended]

■ 2. The FAA amends § 39.13 by adding the following new airworthiness directive:

2009–17–05 Honeywell International Inc. (formerly AlliedSignal Inc., Garrett Engine Division; Garrett Turbine Engine Company; and AiResearch Manufacturing Company of Arizona): Amendment 39–15996. Docket No. FAA–2009–0555; Directorate Identifier 2009–NE–18–AD.

Effective Date

(a) This airworthiness directive (AD) becomes effective September 1, 2009.

Affected ADs

(b) None.

Applicability

(c) This AD applies to Honeywell International Inc. TPE331–10 and TPE331–11 series turboprop engines with a first stage turbine disk, P/N 3101520–1 or 3107079–1, serial number 2–03501–2299, 2–03501–2300, 2–03501–2301, 2–03501–2302, or 2–03501–2304 installed. These engines are installed on, but not limited to, the following airplanes: British Aerospace Jetstream 3201 series, Cessna Aircraft Company Model 441 Conquest, Construcciones Aeronauticas, S.A. (CASA) C–212 series, Dornier Luftfahrt Dornier 228 series, Hawker Beechcraft (formerly Raytheon, formerly Beech) B100, C90 and E90, M7 Aerospace (formerly Fairchild) SA226 and SA227 series (Swearingen Merlin and Metro series), Mitsubishi MU–2B series (MU–2 series), PZL M18 series, and Twin Commander 680 and 690 series (Jetprop Commander).

Unsafe Condition

(d) This AD results from a report of an uncontained failure of a first stage turbine disk that had a metallurgical defect. We are issuing this AD to prevent uncontained failure of the first stage turbine disk and damage to the airplane.

Compliance

(e) You are responsible for having the actions required by this AD performed within the compliance times specified unless the actions have already been done.

Removal of First Stage Turbine Disks From Service

(f) Within 25 flight hours or 25 cycles-in-service after the effective date of this AD, whichever occurs first, remove from service first stage turbine disks, P/N 3101520–1 and P/N 3107079–1, serial numbers 2–03501–2299, 2–03501–2300, 2–03501–2301, 2–03501–2302, and 2–03501–2304.

Installation Prohibition

(g) After the effective date of this AD, do not install first stage turbine disks, P/N 3101520–1 and P/N 3107079–1, serial numbers 2–03501–2299, 2–03501–2300, 2–03501–2301, 2–03501–2302, and 2–03501–2304, into any engine.

Alternative Methods of Compliance

(h) The Manager, Los Angeles Aircraft Certification Office, has the authority to approve alternative methods of compliance for this AD if requested using the procedures found in 14 CFR 39.19.

Related Information

(i) Contact Joseph Costa, Aerospace Engineer, Los Angeles Aircraft Certification Office, FAA, Transport Airplane Directorate, 3960 Paramount Blvd., Lakewood, CA 90712–4137; *e-mail: joseph.costa@faa.gov*; telephone (562) 627–5246; fax (562) 627–5210, for more information about this AD.

(j) Honeywell International Inc. Alert Service Bulletin No. TPE331–72–A2150, dated June 13, 2008, pertains to the subject of this AD. Contact Honeywell International Inc., 111 S. 34th Street, Phoenix, AZ 85034–2802; *Web site: http://portal.honeywell.com*, for a copy of this service information, and for coordinating disk returns with the Honeywell Complete Customer Care Center.

Material Incorporated by Reference

(k) None.

Issued in Burlington, Massachusetts, on August 11, 2009.

Karen Grant,

Acting Manager, Engine and Propeller Directorate, Aircraft Certification Service.

[FR Doc. E9–19633 Filed 8–14–09; 8:45 am]

BILLING CODE 4910–13–P

DEPARTMENT OF THE INTERIOR

Bureau of Indian Affairs

25 CFR Parts 26 and 27

RIN 1076–AE88

Job Placement and Training

AGENCY: Bureau of Indian Affairs, Interior.

ACTION: Final Rule.

SUMMARY: This final rule consolidates requirements governing the Employment Assistance Program and the Adult Vocational Training Program. These programs assist eligible Indian people to obtain job skills and to obtain and retain permanent employment. Combining these regulations is consistent with changes to the Department's budget, which has combined these two regulations into one line item.

DATES: This rule is effective on September 16, 2009.

FOR FURTHER INFORMATION CONTACT: Robert W. Middleton, Ph.D., Director, Office of Indian Energy and Economic Development, either by facsimile at (202) 208–4564, or by mail to 1951 Constitution Avenue, NW., Mailstop 20–SIB, Washington, DC 20245.

SUPPLEMENTARY INFORMATION:

I. Background
II. Statutory Authority
III. Discussion of Public Comments on Proposed Rule
IV. Procedural Requirements
A. Civil Justice Reform (Executive Order 12988)
B. Regulatory Planning and Review (Executive Order 12866)
C. Regulatory Flexibility Act
D. Takings (Executive Order 12630)
E. Federalism (Executive Order 13132)
F. National Environmental Policy Act
G. Unfunded Mandates Act of 1995
H. Paperwork Reduction Act of 1995
I. Consultation With Indian Tribes (Executive Order 13175)
J. Small Business Regulatory Enforcement Fairness Act (SBREFA)
K. Information Quality Act
L. Effects on the Energy Supply (E.O. 13211)
V. Drafting Information

I. Background

This final rule amends 25 CFR parts 26 and 27 by consolidating requirements governing the Employment Assistance Program and the Adult Vocational Training Program into one ''Job Placement and Training Program.'' This revision is consistent with the Department of the Interior's budget, which has integrated the two programs, Adult Vocational Training and the Direct Employment programs, into one comprehensive line item: the Job Placement and Training Program. The revision of this regulation was previously recommended by the Public Law 102–477 Tribal Work Group, Indian tribes, and BIA program staff and is part of the President's Regulatory Reform Initiative. The purpose of the Department of the Interior's Job Placement and Training Program is to enhance employment opportunities for eligible Indians and to provide related services as necessary for them to gain full self-sufficiency or non-subsidized employment. The program services are not intended to duplicate or supplant other job placement or training authorities, resources, or services, but are designed to complement and supplement where there may be gaps in an individual self-sufficiency plan. This program's emphasis will focus on individual self-sufficiency through the implementation of a well-conceived plan that is designed to improve the individual's standard of living. The program may be administered through the Self-Determination or Self-Governance process, Public Law 102–477 Tribal Plan authority, or other similar authorities.

II. Statutory Authority

The authority to issue rules and regulations is vested in the Secretary of the Interior by 5 U.S.C. 301 and sections 463 and 465 of the Revised Statutes (25 U.S.C. 2 and 9).

III. Discussion of Public Comments on Proposed Rule

The regulations were developed working with tribal representatives. During our National Public Law 102–477 conference in Reno, Nevada held from October 30–November 1, 2007, the proposed draft regulations and their effect on Job Placement and Training were discussed. Three hundred twenty-eight individuals attended the conference. The proposed regulations were also discussed at the Annual Alaska Bureau Service Providers conference in November 2007. We received numerous comments throughout a previous informal review process for more than the past 5 years. Some comments recommended more clarity or consistency and more detail or additional language in order to better clarify the Job Placement and Training Program. The Department incorporated changes based on these comments into the proposed rule, published on April 9, 2008 (73 FR 19179).

During the public comment period we received one comment from the Co-Chair of the Public Law 102–477 (Indian Employment, Training and Related Services Demonstration Act, as amended) Tribal Work Group. Specifically she stated, ''As P.L. 102–477 Tribal workgroup Co-Chair representing over 258 federally recognized tribes or consortiums * * * the consensus of the group is that the proposed rules are reasonable and acceptable. I have personally read the proposed rules and find them clear, easy to understand and well worded. I concur with the consensus of the 477 Tribal Work Group members.'' This written comment agreed with the proposed draft and no corrections or revisions were recommended. The comment stated that the proposed regulations were consistent with tribal suggestions and integration of programs to facilitate tribal implementation.

Given the positive response to the proposed rule, the Department has not made any changes to the rule beyond a few editorial changes and clarifications, which include:

- Adding to the definition of ''On-the-job-training (OJT)'' in section 26.1 that on-the-job training activities are limited to 24 months. This is a statutory requirement;
- Replacing ''client'' with ''applicant'' or ''person'' in a few instances where those terms are more appropriate;
- In section 26.5, clarifying that eligible applicants may live in an agreed contract service area;
- In section 26.23, clarifying that only one comprehensive Individual Self-Sufficiency Plan (ISP) will be developed for each applicant;
- In section 26.32, clarifying that an application may include an applicant assessment or other documents required by the servicing agency;
- In section 26.35, deleting ''public'' as a modifier to ''transportation'' to clarify that support services may include both public and private transportation; and
- In section 26.38, adding a sentence to clarify that if the servicing agency is a tribal contractor, the appeal may be filed with the tribal contractor under their established procedure, rather than with the service provider.

IV. Procedural Requirements

A. Civil Justice Reform (Executive Order 12988)

The Department has certified to the Office of Management and Budget (OMB) that this proposed rule meets the applicable standards provided in Sections 3(a) and 3(b)(2) of Executive Order 12988. Specifically, this rule: (a) Meets the criteria of section 3(a) requiring that all regulations be reviewed to eliminate errors and ambiguity and be written to minimize litigation; and (b) meets the criteria of section 3(b)(2) requiring that all regulations be written in clear language and contain clear legal standards.

B. Regulatory Planning and Review (Executive Order 12866)

This final rule is not a significant regulatory action and the OMB has not reviewed this rule under Executive Order 12866.

(a) This final rule will not have an effect of $100 million or more on the economy. Further, this rule will not adversely affect in a material way the economy, productivity, competition, jobs, the environment, public health or safety, or State, local, or tribal governments or communities. This rule combines two programs into one, reflecting a change to the Department's budget, which consolidated funding for the two programs into one line item. The purpose of the program is to assist eligible applicants to obtain job skills and to find and retain a job leading to self-sufficiency. Any effect on productivity, competition, jobs, and tribal governments or communities will be positive.

(b) This final rule does not create a serious inconsistency or otherwise interfere with an action taken or planned by another agency. This rule encourages coordination with other agency programs offering job training and placement assistance. For example, the rule states that the Bureau will consider other available resources, including those offered by other agencies, in determining financial need; allows the Bureau or tribal service provider to enter into agreements with appropriate Federal, State, or local government agencies, among other organizations, to provide facilities and services required for vocational training programs; and encourages partnering with similar programs and resources that may be offered by other agencies or organizations.

(c) This final rule does not alter the budgetary effects of entitlements, grants, user fees, or loan programs or the rights or obligations of their recipients. This rule does not alter any budgetary effects or the rights or obligations of recipients to job placement and training services; the rule merely consolidates programs to reflect consolidation into one budget line item.

(d) This final rule does not raise novel legal or policy issues. The Bureau and tribal service providers have been providing the types of services covered by this now consolidated rule and the legal and policy basis for providing these services has been well established.

C. Regulatory Flexibility Act

This final rule will not have a significant economic impact on a substantial number of small entities under the Regulatory Flexibility Act (5 U.S.C. 601 *et seq.*). This rule offers job training and placement assistance to certain eligible individuals and will not affect small entities.

D. Takings (Executive Order 12630)

The Department has determined that this final rule does not have significant ''takings'' implications. The final rule does not pertain to ''taking'' of private property interests, nor does it affect private property.

E. Federalism (Executive Order 13132)

The Department has determined that this final rule does not have significant federalism effects because it pertains solely to Federal-tribal relations and will not interfere with the roles, rights and responsibilities of States. Therefore, a Federalism Assessment is not required.

F. National Environmental Policy Act

The Department has determined that this final rule does not constitute a major Federal action significantly affecting the quality of the human environment and that no detailed statement is required pursuant to the National Environmental Policy Act of 1969.

G. Unfunded Mandates Act of 1995

This final rule imposes no unfunded mandates on any governmental or private entity and is in compliance with the provisions of the Unfunded Mandates Act of 1995. Additionally, this rule does not have a significant or unique effect on State, local, or tribal governments or the private sector. The rule addresses a program that offers assistance to eligible individuals to obtain job skills and to find and retain a job leading to self-sufficiency; it does not require any action or service by any governmental or private entity. A statement containing the information required by the Unfunded Mandates Reform Act (2 U.S.C. 1531 *et seq.*) is not required.

H. Paperwork Reduction Act of 1995

The information collection requirements contained in this final rule have been renewed by the Office of Management and Budget (OMB) under 44 U.S.C. 3504(h). The OMB control number is 1076–0062. The authorization expires on March 31, 2011.

I. Consultation With Indian Tribes (Executive Order 13175)

In accordance with Executive Order 13175, we have identified potential effects on federally recognized Indian tribes that will result from this rule. This final rule will affect those tribes that provide job placement and training programs by consolidating the two CFR parts that had previously governed the assistance they provide. During the week of October 27, 2007, we met with tribes at the National Public Law 102–477 Conference to discuss changes in the regulations. We also discussed proposed changes during the Annual Alaska Providers Service Conference in November 2007. The proposed regulations have been a topic of discussion with tribes for more than the past 5 years. The proposed changes were discussed at the annual Adult Vocational Training Conference sponsored by Sinte Gleska College for several years. We have considered tribal views in the proposed rule as they were being developed for over 5 years with intensive tribal consultation and consequently the final rule had only one public comment and that comment was favorable.

J. Small Business Regulatory Enforcement Fairness Act (SBREFA)

This rule is not a major rule under 5 U.S.C. 804(2), the Small Business Regulatory Enforcement Fairness Act. This rule:

(a) Does not have an annual effect on the economy of $100 million or more. This rule combines two programs into one, reflecting a change to the Department's budget, which consolidated funding for the two programs into one line item.

(b) Will not cause a major increase in costs or prices for consumers, individual industries, Federal, State, or local government agencies, or geographic regions. This rule will not affect costs or prices because it relates only to a job training and assistance program for eligible individuals.

(c) Does not have significant adverse effects on competition, employment, investment, productivity, innovation, or the ability of U.S.-based enterprises to compete with foreign-based enterprises. The purpose of this rule's program is to assist eligible clients to obtain job skills and to find and retain a job leading to self-sufficiency. Any effect on competition, employment, investment, productivity, innovation or the ability of U.S.-based enterprises to compete with foreign-based enterprises will be positive, by providing more individuals with needed skills and job experience.

K. Information Quality Act

In developing this final rule we did not conduct or use a study, experiment, or survey requiring peer review under the Information Quality Act (Pub. L. 106–554).

L. Effects on the Energy Supply (E.O. 13211)

This final rule is not a significant energy action under the definition in Executive Order 13211. A Statement of Energy Effects is not required.

V. Drafting Information

The primary author of this document is Lynn Forcia, Chief, Division of Workforce Development.

List of Subjects in 25 CFR Parts 26 and 27

Employment, Grant programs—Indians, Indians—Adult education, Indians—Vocational education, Manpower training programs—Occupational training.

Dated: June 11, 2009.

Larry Echo Hawk,

Assistant Secretary—Indian Affairs.

■ For the reasons given in the preamble under the authority of 5 U.S.C. 301 and sections 463 and 465 of the Revised Statutes (25 U.S.C. 2 and 9), the Department of the Interior amends part 26 and part 27 of title 25, chapter I of the Code of Federal Regulations as set forth below.

Title 25—Indians

CHAPTER I—BUREAU OF INDIAN AFFAIRS, DEPARTMENT OF THE INTERIOR

■ 1. Revise part 26 to read as follows:

PART 26—JOB PLACEMENT AND TRAINING PROGRAM

Subpart A—General Applicability

Sec.
26.1 What terms do I need to know?
26.2 Who authorizes this collection of information?
26.3 What is the purpose of the Job Placement and Training Program?
26.4 Who administers the Job Placement and Training Program?
26.5 Who may be eligible for Job Placement and Training?
26.6 Who is eligible to receive financial assistance?
26.7 How is financial need established?
26.8 Where do I go to apply for Job Placement and Training assistance?
26.9 How do I apply for assistance?
26.10 When will I find out if I have been selected for Job Placement and Training assistance?
26.11 What type of Job Placement and Training assistance may be approved?
26.12 Who provides the Job Placement and Training?
26.13 How long may I be in training and how long can I receive other assistance?
26.14 What or who is a service provider?
26.15 What makes an applicant eligible for Job Placement and Training services?
26.16 If I am awarded financial assistance, how much will I receive?
26.17 Can more than one family member be financially assisted at the same time?
26.18 What kind of supportive services are available?
26.19 Will I be required to contribute financially to my employment and training goals?
26.20 Can I be required to return portions of my grant?
26.21 Can this program be combined with other similar programs for maximum benefit?
26.22 May a tribe integrate Job Placement and Training funds into its Public Law 102–477 Plan?
26.23 What is an Individual Self-Sufficiency Plan (ISP)?

Subpart B—Job Placement Services

26.24 What is the scope of the Job Placement Program?
26.25 What constitutes a complete Job Placement Program application?
26.26 What job placement services may I receive?
26.27 What kind of job placement support services can I expect?
26.28 What follow-up services are available after I become employed?

Subpart C—Training Services

26.29 What is the scope of the Job Training Program?
26.30 Does the Job Training Program provide part-time training or short-term training?
26.31 May I repeat my job training?
26.32 What constitutes a complete Job Training Program application?
26.33 How do I show that I need job training?
26.34 What type of job training assistance may be approved?
26.35 What kind of support services are available to me?
26.36 What follow-up service is available after I complete training?
26.37 Are there training standards that I must follow?

Subpart D—Appeal by an Applicant

26.38 May I appeal a decision about my application?

Authority: 25 U.S.C. 13; Sec. 1, Public Law 84–959, 70 Stat. 966 as amended by Public Law 88–230, 77 Stat. 471 (25 U.S.C. 309)

Subpart A—General Applicability

§ 26.1 What terms do I need to know?

As used in this part:

Bureau means the Bureau of Indian Affairs (BIA).

Department means the Department of the Interior.

Gainful Employment means work resulting in self-sufficiency.

Indian means any person who is a member of a federally recognized tribe, including Alaska Natives.

Individual Self-Sufficiency Plan (ISP) means a written plan designed to meet the goal of employment through specific actions that meet the needs of the individual. The plan is jointly developed and is signed by both the applicant and the servicing office. The ISP addresses the client's barriers to employment and a plan of action to address barriers.

Must means a mandatory act or requirement.

On or Near Reservation means those areas or communities adjacent or contiguous to reservations, or service areas where Job Training and Placement programs are provided upon approval of the Assistant Secretary-Indian Affairs or his designated representative. For purposes of this program and services, Alaska is included in this definition.

On-the-Job-Training (OJT) means a written agreement for an employer to provide training to a participant who engages in productive work that provides knowledge or skills essential to the full and adequate performance of the job. The employer receives reimbursement from the Job Training Program for the wage rate of the participant. OJT may be used to meet the goal(s) in the participant's ISP, as long as it does not exceed 24 months.

Permanent Employment means a year-round job or one that re-occurs seasonally, lasting at least 90 days per work season.

Service Area means a location agreed to by the tribe with the Bureau to provide Job Training and Placement Services.

Servicing Office means the Bureau office or the office of the tribal service provider that administers the Job Training and Placement Program.

Tribal Governing Body means the recognized entity empowered to exercise governmental authority over a federally recognized tribe.

Tribal Service Provider means a tribe or tribal organization that administers the Job Training and Placement Program pursuant to Public Law 93–638 or Public Law 102–477.

Tribe means any tribal entity listed in the **Federal Register** notice that the Secretary of the Interior publishes under Public Law 103–454, 108 Stat. 4791.

Underemployed means an individual who is working but whose income is insufficient to meet essential needs.

Unemployed means an individual who is not currently working or employed.

Unmet need means the difference between available resources and the cost associated with finding gainful employment.

Vocational Training means technical training that leads to permanent and gainful employment.

We, *us*, or *our* means the Secretary of the Interior, or an official in the Office of the Assistant Secretary—Indian Affairs, or an official in the Bureau of Indian Affairs to whom the Secretary has delegated authority.

§ 26.2 Who authorizes this collection of information?

The information collection requirements contained in this part have been approved by the Office of Management and Budget under the Paperwork Reduction Act of 1995, 44 U.S.C. 3507(d), and assigned OMB clearance number 1076–0062. Response is required to obtain a benefit. A Federal agency may not conduct or sponsor, and you are not required to respond to a collection of information unless the form or regulation requesting the information has a currently valid OMB Control Number.

§ 26.3 What is the purpose of the Job Placement and Training Program?

The purpose of the Job Placement and Training Program is to assist eligible applicants to obtain job skills and to find and retain a job leading to self-sufficiency.

§ 26.4 Who administers the Job Placement and Training Program?

The Job Placement and Training Program is administered by the Bureau of Indian Affairs or a tribal service provider. Tribes are encouraged to provide services directly to Indians by either entering into a Public Law 93–638 contract with the Bureau or a compact with the Office of Self—Governance. Tribes may also consolidate Job Placement and Training Program funds in accordance with the provisions of the Indian Employment, Training, and Related Services Demonstration Act of 1992, Public Law 102–477.

§ 26.5 Who may be eligible for Job Placement and Training?

You may apply for assistance for employment or training if all of the following criteria are met:

(a) You meet the definition of Indian in § 26.1; and

(b) You are residing on or near an Indian reservation or in a service area, or in the agreed contract service area; and

(c) You are unemployed or underemployed or need and can benefit from employment assistance as determined by your servicing office; and

(d) You complete an ISP.

§ 26.6 Who is eligible to receive financial assistance?

Financial assistance is only available to persons:

(a) Approved for training that will lead to permanent, gainful and meaningful employment; or

(b) Who have obtained a job and need financial assistance to retain the job, as determined by the servicing office.

§ 26.7 How is financial need established?

You must show that current income and other available resources are not sufficient to meet employment or training goals.

§ 26.8 Where do I go to apply for Job Placement and Training assistance?

You may apply for Job Placement and Training assistance at the servicing office nearest to your current residence.

§ 26.9 How do I apply for assistance?

(a) You should contact the BIA office or the tribal service provider which is nearest to your current residence to get an application form;

(b) You must complete the application process as established by your servicing office; and

(c) You must complete and sign a comprehensive ISP (or an individual development plan (IDP) or employment development plan (EDP), which are synonymous with an ISP).

§ 26.10 When will I find out if I have been selected for Job Placement and Training assistance?

(a) Your servicing office will notify you in writing within 30 calendar days once it receives a completed job training application request; or

(b) Your servicing office will notify you within 5 business days once it has received a completed Job Placement application and written job offer.

§ 26.11 What type of Job Placement and Training assistance may be approved?

Services provided may include funding for employment, training or supplemental assistance that supports job placement or training activities (see subpart B of this part for Job Placement or subpart C of this part for Training Services).

§ 26.12 Who provides the Job Placement and Training?

The Bureau or a tribal service provider may enter into contracts or agreements to provide facilities and services required for vocational training programs with:

(a) Indian tribal governing bodies or, when approved by the tribal service provider, other provider of meaningful training programs not currently operated by the tribe;

(b) Appropriate Federal, State, or local government agencies;

(c) Public or private schools with a recognized reputation in vocational education and successfully obtaining employment for graduates;

(d) Education firms that operate residential training centers; and

(e) Corporations and associations or small business establishments with apprenticeship or on-the-job training (OJT) programs leading to skilled employment.

§ 26.13 How long may I be in training and how long can I receive other assistance?

(a) Your training at any approved institution, apprenticeship, and/or OJT must not exceed 24 months of full-time actual training hours.

(b) Registered nurse training must not exceed 36 months of full actual training hours.

(c) You may receive other financial assistance under this program determined by your ISP that you have developed with your tribal service provider.

§ 26.14 What or who is a service provider?

A service provider is an administrative unit of a BIA Regional Office, a BIA Agency Office, a BIA Field Office, a Tribal contracted office, or Alaska Native federally recognized tribe, or a tribal organization, that provides grants to help offset the cost of vocational or technical training (at approved places), or immediate job placement services. To the extent resources will allow, other kinds of support service may also be available.

§ 26.15 What makes an applicant eligible for Job Placement and Training services?

You are eligible for services if:

(a) You meet the definition of an American Indian or Alaska Native; and

(b) Either:

(1) You can demonstrate an unmet need and show a need for job training or placement services in order to become gainfully and meaningfully employed; or

(2) You are skilled, but need financial assistance to get to a job, and you show an aptitude and potential to benefit from services.

§ 26.16 If I am awarded financial assistance, how much will I receive?

(a) The amount of financial assistance you receive depends on your unmet needs. If applicable, you should apply for:

(1) A Pell Grant if your training institution offers this grant; and

(2) Other education grants or loans for which you may qualify.

(b) The Bureau or tribal service provider will award financial assistance up to the level of your unmet need to the extent resources are available. It is possible that the combination of available financial assistance will not equal your financial need.

§ 26.17 Can more than one family member be financially assisted at the same time?

Yes, more than one family member can be assisted, providing that each applicant is eligible.

§ 26.18 What kinds of supportive services are available?

The BIA or tribal service provider may provide, but is not limited to, the following supportive services:

(a) Assistance in completing an application and the provision of supporting documents;

(b) A description of the Job Placement and Training Program and related services;

(c) An assessment of eligibility;

(d) An assessment of need for employment services (or a combination of training and employment services);

(e) The creation of an ISP (which may include training and other support services);

(f) Counseling services that address cultural differences and strengthen probability of client success;

(g) Referral to other appropriate services;

(h) Youth work experience;

(i) Tools for employment;

(j) Initial union dues;

(k) Transportation of household effects;

(l) Security and safety deposits;

(m) Items to improve personal appearance such as professional work clothing;

(n) If required, kitchen and other household effects including bedding and appliances; and

(o) Childcare.

§ 26.19 Will I be required to contribute financially to my employment and training goals?

Yes, the Job Placement and Training Program clients are required to seek other funding, including the use of personal resources as a condition of their ISP.

§ 26.20 Can I be required to return portions of my grant?

Yes, grants are awarded for a specific purpose as described in the applicant's ISP. If the funds cannot be spent according to the ISP, the unused portion must be returned to the service provider's job placement and training budget.

§ 26.21 Can this program be combined with other similar programs for maximum benefit?

Yes, combining this program with other programs is encouraged, to the extent that laws governing program services permit partnering with similar programs and resources.

§ 26.22 May a tribe integrate Job Placement and Training funds into its Public Law 102–477 Plan?

Yes, Indian tribes may integrate Job Placement and Training Program funds into their Public Law 102–477 Plan.

§ 26.23 What is an Individual Self-Sufficiency Plan (ISP)?

(a) An ISP is a document that:

(1) Spells out the details necessary for a person to assume a meaningful job (usually within a reasonable period of time);

(2) Supplements the application process and includes needed finances, special clothing, transportation, and support services necessary for employment;

(3) Identifies all financial resources and defines the employment or training objective and activities planned to reach the objective; and

(4) Outlines how the applicant will participate in job placement, where resources will allow.

(b) The employer's job information and offer should be attached to the ISP, which becomes a part of the application (and supporting documents).

(c) The ISP must indicate that the services received will meet the individual's and tribal goals.

(d) Only one comprehensive ISP can be in effect for each applicant at one time. The comprehensive ISP should be coordinated and integrated with other programs offered by the servicing agency.

Subpart B—Job Placement Services

§ 26.24 What is the scope of the Job Placement Program?

The Job Placement Program assists Indian people who have job skills to obtain and retain gainful employment leading to self-sufficiency.

§ 26.25 What constitutes a complete Job Placement Program application?

To be complete, a Job Placement Program application must contain all of the items required by this section.

(a) An application signed by the applicant and servicing office representative.

(b) An ISP, including a list of goods and services needed to get the applicant to the job, signed by the applicant and servicing representative.

(c) An accepted official document that shows the formal relationship between the applicant and a federally recognized tribe or a document that shows an applicant's eligibility for services.

(d) A statement by the service provider that the applicant has been declared eligible for services.

(e) A financial statement that reflects the applicant's unmet need.

(f) An employer certification that the applicant has been hired. The certification must include, at a minimum:

(1) Job title;

(2) Beginning date;

(3) Beginning wage;

(4) Date first full paycheck will be issued; and

(5) Expected duration of the job.

§ 26.26 What Job Placement services may I receive?

As determined by the service provider, you may receive transportation to work for a limited period, funds to finalize your job resume, and job placement assistance.

§ 26.27 What kind of Job Placement support services can I expect?

Service office representatives will make the determination of what support services are necessary and to be funded. Examples of job placement support services include, but are not limited to resume preparation, interview techniques, job retention, and related living skills.

§ 26.28 What follow-up services are available after I become employed?

As determined by the service provider, the following type of services may be available: Temporary housing, transportation to work for a limited period of time, work clothing, and childcare.

Subpart C—Training Services

§ 26.29 What is the scope of the Job Training Program?

A service provider may offer career counseling, assessment, recommend training institutions that properly prepare applicants for entry into their career field, and help prepare applicants for gainful employment to the extent program funding will allow and based on applicants' established need.

§ 26.30 Does the Job Training Program provide part-time training or short-term training?

Yes, part-time and short-term training are allowable provided the training assists individuals to develop skills necessary to acquire gainful employment, in accordance with the ISP, and depending upon availability of resources. Part-time means no less than six credit units per semester (based on a nine-month school year).

§ 26.31 May I repeat my training?

Eligibility for repeat training and other financial assistance will be determined by your tribal service provider.

§ 26.32 What constitutes a complete Job Training Program application?

A request for training includes:

(a) Intake and application data;

(b) Feasible, comprehensive ISP;

(c) Tribal affiliation document;

(d) Selective Service registration;

(e) Selected place of training;

(f) Statement of financial need;

(g) Statement of eligibility; and

(h) Applicant assessment or other documents as required by the servicing agency.

§ 26.33 How do I show I need job training?

The need for Job Placement and Training is shown by completing an application for training that demonstrates financial need.

§ 26.34 What type of job training assistance may be approved?

The following types of training that lead to gainful employment may be approved:

(a) Nationally accredited vocational training;

(b) Training and non-accredited vocational courses provided by a tribe;

(c) Training programs not operated by the tribe but approved by the service provider;

(d) Apprenticeship training supervised by a State apprenticeship agency or council or by the Federal Apprenticeship Training Service that is provided by a corporation or association that has been training bona fide apprentices for at least one year or any other apprenticeship program approved by the service provider; or

(e) OJT offered by a public or private business.

§ 26.35 What kind of support services are available to me?

As determined by the service provider, training support services include, but are not limited to, stipends, transportation, and childcare.

§ 26.36 What follow-up service is available after I complete training?

Job Placement assistance may follow training.

§ 26.37 Are there training standards that I must follow?

Yes, students must maintain the minimum academic requirements and be in good standing as set forth by the training institute. If an applicant is separated from training for good cause, the applicant may be responsible for repaying any portion of misused funds.

Subpart D—Appeal by an Applicant

§ 26.38 May I appeal a decision about my application?

If the servicing agency denies your application you may appeal under part 2 of this chapter by sending your appeal to your service provider. If your servicing agency is a tribal contractor, you should file your appeal with the tribal contractor under their established procedure. The letter informing you of the decision on your application will include information on how to appeal.

PART 27—[Removed]

■ 2. Remove part 27.

[FR Doc. E9–19720 Filed 8–14–09; 8:45 am]

BILLING CODE 4310–4M–P

DEPARTMENT OF HOMELAND SECURITY

Coast Guard

33 CFR Part 165

[Docket No. USCG–2009–0644]

RIN 1625–AA00

Safety Zones; Neptune Deep Water Port, Atlantic Ocean, Boston, MA

AGENCY: Coast Guard, DHS.

ACTION: Temporary final rule.

SUMMARY: The Coast Guard is establishing two temporary safety zones extending 500 meters in all directions from each of the two submerged turret-loading buoys and accompanying systems that are part of GDF Suez Energy's Neptune Deepwater Port located in the Atlantic Ocean off of Boston, Massachusetts. The purpose of these temporary safety zones is to protect vessels and mariners from the potential safety hazards associated with construction of the deepwater port facilities and the large sub-surface turret buoys, and to protect the deepwater port infrastructure. All vessels, with the exception of deepwater port support vessels, are prohibited from entering into, remaining or moving within either of the safety zones.

DATES: This rule is effective from July 31, 2009 through February 16, 2010.

ADDRESSES: Documents indicated in this preamble as being available in the docket are part of docket USCG–2009–0644 and are available online by going to *http://www.regulations.gov,* inserting USCG–2009–0644 in the ''Keyword'' box, and then clicking ''Search.'' They are also available for inspection or copying at the Docket Management Facility (M–30), U.S. Department of Transportation, West Building Ground Floor, Room W12–140, 1200 New Jersey Avenue, SE., Washington, DC 20590, between 9 a.m. and 5 p.m., Monday through Friday, except Federal holidays.

FOR FURTHER INFORMATION CONTACT: If you have questions on this temporary rule, call or e-mail Ensign Marie Haywood, United States Coast Guard, Sector Boston, Waterways Management; telephone 617–223–5160, e-mail *Michele.M.Haywood@uscg.mil.* If you have questions on viewing the docket, call Renee V. Wright, Program Manager, Docket Operations, telephone 202–366–9826.

SUPPLEMENTARY INFORMATION:

Regulatory Information

The Coast Guard is issuing this temporary final rule without prior notice and opportunity to comment pursuant to authority under section 4(a) of the Administrative Procedure Act (APA) (5 U.S.C. 553(b)). This provision authorizes an agency to issue a rule without prior notice and opportunity to comment when the agency for good cause finds that those procedures are ''impracticable, unnecessary, or contrary to the public interest.'' Under 5 U.S.C. 553(b)(B), the Coast Guard finds that good cause exists for not publishing a notice of proposed rulemaking (NPRM) with respect to this rule. The deepwater port facilities discussed elsewhere in this rule are in the final stages of completion and present a potential safety hazard to vessels, especially fishing vessels, operating in the vicinity of submerged structures associated with the deepwater port facility.

These safety zones are needed pending implementation of a final regulatory scheme to protect vessels from the hazards posed by the presence of the currently uncharted, submerged deepwater infrastructure. Final regulations are being developed and are expected to be proposed in a notice of proposed rulemaking in a separate rulemaking docket, USCG–2009–0589. In the mean time, immediate action is necessary to protect vessels currently operating in the area from uncharted submerged hazards. Further, a delay or cancellation of this portion of the construction is contrary to the public's interest in the timely completion of this project.

For the same reasons given above, the Coast Guard also finds under 5 U.S.C. 553(d)(3) that good cause exists for making this rule effective less than 30 days after publication in the **Federal Register.**

Background and Purpose

On March 23, 2007, the Maritime Administration (MARAD), in accordance with the Deepwater Port Act of 1974, as amended, issued a license to Suez Energy to own, construct, and operate a natural gas deepwater port named ''Neptune''. Neptune Deepwater Port (NEPTUNE) is located in the Atlantic Ocean, approximately eight nautical miles South-southeast of Gloucester, Massachusetts, in Federal waters.

The Neptune Deepwater Port can accommodate the mooring, connecting, and offloading of two liquefied natural gas carriers (LNGCs) at one time. The Neptune Deepwater Port operator plans to offload LNGCs by regasifying the liquefied natural gas (LNG) on board the vessels. The regasified natural gas is then transferred through two submerged turret loading buoys, via a flexible riser

leading to a seabed pipeline that ties into the existing Algonquin Gas Transmission Pipeline for transfer to shore. GDF Suez recently completed installation of the submerged turret loading (STL) buoys and associated sub-surface infrastructure, which includes, among other things, a significant sub-surface sea anchor and mooring system.

The temporary zones created by this rule ensure there is no gap in safety regulations, and protects the safety of persons and vessels operating around the submerged deepwater port infrastructure while public comments on an NPRM creating permanent regulations around the Neptune Deepwater Port facility are analyzed and that rulemaking project is completed.

Discussion of Rule

The Coast Guard is establishing two temporary safety zones, each of which extends in a radius of 500 meters around the Neptune Deepwater Port STL buoys to protect vessels from submerged hazards. The approximate coordinates of the two STL buoys are: STL Buoy A: Latitude 42°29′12.3″ N, Longitude 070°36′29.7″ W; and, STL Buoy B: Latitude 42°27′20.5″ N, Longitude 070°36′07.3″ W. The location of each buoy is indicated on the ocean surface above it by several small, white buoys labeled LNG with red flags and radar-reflected buoys known as Hi Flyers.

All vessels, other than Liquefied Natural Gas carriers and associated support vessels are prohibited from entering into, remaining or moving within the safety and security zones.

Regulatory Analyses

We developed this rule after considering numerous statutes and executive orders related to rulemaking. Below we summarize our analyses based on 13 of these statutes or executive orders.

Regulatory Planning and Review

This rule is not a significant regulatory action under section 3(f) of Executive Order 12866, Regulatory Planning and Review, and does not require an assessment of potential costs and benefits under section 6(a)(3) of that Order. The Office of Management and Budget has not reviewed it under that Order.

We expect the economic impact of this regulation to be so minimal that a full Regulatory Evaluation is unnecessary. Extensive outreach has been conducted by the company, GDF Suez Energy, with the local boating and fishing community so as to minimize impacts. In addition, the company has stationed a vessel at the location of the Neptune project to notify vessels potentially conducting underwater operations of the local dangers.

Small Entities

Under the Regulatory Flexibility Act (5 U.S.C. 601–612), we have considered whether this rule would have a significant economic impact on a substantial number of small entities. The term ''small entities'' comprises small businesses, not-for-profit organizations that are independently owned and operated and are not dominant in their fields, and governmental jurisdictions with populations of less than 50,000.

The Coast Guard certifies under 5 U.S.C. 605(b) that this rule will not have a significant economic impact on a substantial number of small entities.

This rule will affect the following entities, some of which may be small entities: The owners or operators of fishing and recreational vessels intending to transit or anchor in a portion of the Atlantic Ocean and Massachusetts Bay area covered by this rule. These safety zones will not have a significant economic impact on a substantial number of small entities for the following reasons. These two safety zones only extend for 500 meters from each of the STL buoys allowing navigation in all other areas of Massachusetts Bay, and public notification of the safety and the inherent dangers of the STL buoys and underwater equipment will continue to be made by the Coast Guard as well as Neptune personnel.

Assistance for Small Entities

Under section 213(a) of the Small Business Regulatory Enforcement Fairness Act of 1996 (Pub. L. 104–121), we offer to assist small entities in understanding the rule so that they can better evaluate its effects on them and participate in the rulemaking process.

Small businesses may send comments on the actions of Federal employees who enforce, or otherwise determine compliance with, Federal regulations to the Small Business and Agriculture Regulatory Enforcement Ombudsman and the Regional Small Business Regulatory Fairness Boards. The Ombudsman evaluates these actions annually and rates each agency's responsiveness to small business. If you wish to comment on actions by employees of the Coast Guard, call 1–888–REG–FAIR (1–888–734–3247). The Coast Guard will not retaliate against small entities that question or complain about this rule or any policy or action of the Coast Guard.

Collection of Information

This rule calls for no new collection of information under the Paperwork Reduction Act of 1995 (44 U.S.C. 3501–3520).

Federalism

A rule has implications for federalism under Executive Order 13132, Federalism, if it has a substantial direct effect on State or local governments and would either preempt State law or impose a substantial direct cost of compliance on them. We have analyzed this rule under that Order and have determined that it does not have implications for federalism.

Unfunded Mandates Reform Act

The Unfunded Mandates Reform Act of 1995 (2 U.S.C. 1531–1538) requires Federal agencies to assess the effects of their discretionary regulatory actions. In particular, the Act addresses actions that may result in the expenditure by a State, local, or tribal government, in the aggregate, or by the private sector of $100,000,000 or more in any one year. Though this rule will not result in such an expenditure, we do discuss the effects of this rule elsewhere in this preamble.

Taking of Private Property

This rule will not effect a taking of private property or otherwise have taking implications under Executive Order 12630, Governmental Actions and Interference with Constitutionally Protected Property Rights.

Civil Justice Reform

This rule meets applicable standards in sections 3(a) and 3(b)(2) of Executive Order 12988, Civil Justice Reform, to minimize litigation, eliminate ambiguity, and reduce burden.

Protection of Children

We have analyzed this rule under Executive Order 13045, Protection of Children from Environmental Health Risks and Safety Risks. This rule is not an economically significant rule and does not create an environmental risk to health or risk to safety that may disproportionately affect children.

Indian Tribal Governments

This rule does not have tribal implications under Executive Order 13175, Consultation and Coordination with Indian Tribal Governments, because it does not have a substantial direct effect on one or more Indian tribes, on the relationship between the Federal Government and Indian tribes, or on the distribution of power and

responsibilities between the Federal Government and Indian tribes.

Energy Effects

We have analyzed this rule under Executive Order 13211, Actions Concerning Regulations That Significantly Affect Energy Supply, Distribution, or Use. We have determined that it is not a ''significant energy action'' under that order because it is not a ''significant regulatory action'' under Executive Order 12866 and is not likely to have a significant adverse effect on the supply, distribution, or use of energy. The Administrator of the Office of Information and Regulatory Affairs has not designated it as a significant energy action. Therefore, it does not require a Statement of Energy Effects under Executive Order 13211.

Technical Standards

The National Technology Transfer and Advancement Act (NTTAA) (15 U.S.C. 272 note) directs agencies to use voluntary consensus standards in their regulatory activities unless the agency provides Congress, through the Office of Management and Budget, with an explanation of why using these standards would be inconsistent with applicable law or otherwise impractical. Voluntary consensus standards are technical standards (e.g., specifications of materials, performance, design, or operation; test methods; sampling procedures; and related management systems practices) that are developed or adopted by voluntary consensus standards bodies.

This rule does not use technical standards. Therefore, we did not consider the use of voluntary consensus standards.

Environment

We have analyzed this rule under Department of Homeland Security Management Directive 023–01 and Commandant Instruction M16475.lD, which guide the Coast Guard in complying with the National Environmental Policy Act of 1969 (NEPA) (42 U.S.C. 4321–4370f), and have concluded this action is one of a category of actions which do not individually or cumulatively have a significant effect on the human environment. This rule is categorically excluded, under figure 2–1, paragraph (34)(g), of the Instruction because the rule creates two safety zones around submerged buoys and their associated infrastructure. An environmental analysis checklist and a categorical exclusion determination will be available in the docket where indicated under **ADDRESSES**.

List of Subjects in 33 CFR Part 165

Harbors, Marine safety, Navigation (water), Reporting and recordkeeping requirements, Security measures, Waterways.

■ For the reasons discussed in the preamble, the Coast Guard amends 33 CFR part 165 as follows:

PART 165—REGULATED NAVIGATION AREAS AND LIMITED ACCESS AREAS

■ 1. The authority citation for part 165 continues to read as follows:

Authority: 33 U.S.C. 1226, 1231; 46 U.S.C. Chapter 701, 3306, 3703; 50 U.S.C. 191, 195; 33 CFR 1.05–1, 6.04–1, 6.04–6, and 160.5; Pub. L. 107–295, 116 Stat. 2064; Department of Homeland Security Delegation No. 0170.1.

■ 2. Add temporary § 165.T01–0644 to read as follows:

§ 165.T01–0644 Safety Zones; Neptune Deepwater Port, Atlantic Ocean, Boston, MA.

(a) *Location.* The following areas are safety zones: All navigable waters of the United States within a 500-meter radius of each of the two submerged turret loading buoys of the Neptune Deepwater Port, which are located at approximately 42°23′38″ N, 070°35′31″ W and 42°23′56″ N, 070°37′00″ W (NAD83). The location of the two submerged turret loading buoys is marked on the surface of the water by several small, white buoys labeled LNG with red flags and radar-reflected buoys known as ''Hi Flyers.''

(b) *Definitions.* As used in this section: *Authorized representative* means a Coast Guard commissioned, warrant, or petty officer or a Federal, State, or local law enforcement officer designated by or assisting the Captain of the Port Boston (COTP).

Deepwater port means any facility or structure meeting the definition of deepwater port in 33 CFR 148.5.

Support vessel means any vessel meeting the definition of support vessel in 33 CFR 148.5.

(c) *Regulations.*

(1) The general regulations contained in 33 CFR 165.23 apply.

(2) In accordance with the general regulations, entry into or movement within these safety zones is prohibited unless authorized by the Captain of the Port Boston. Liquefied Natural Gas Carrier vessels and related Support Vessels calling on the Neptune Deepwater Port are authorized to enter and move within the safety zones of this section in the normal course of their operations.

(3) All persons and vessels must comply with the Coast Guard Captain of the Port or authorized representative.

(4) Upon being hailed by an authorized representative by siren, radio, flashing light or other means, the operator of the vessel must proceed as directed.

(5) Persons and vessels may contact the Coast Guard to request permission to enter the zone on VHF–FM Channel 16 or via phone at 617–223–5761.

Dated: July 31, 2009.

John N. Healey,

Captain, U.S. Coast Guard, Captain of the Port Boston.

[FR Doc. E9–19547 Filed 8–14–09; 8:45 am]

BILLING CODE 4910–15–P

POSTAL REGULATORY COMMISSION

39 CFR Part 3020

[Docket No. CP2009–46; Order No. 265]

Global Plus 1 Contracts

AGENCY: Postal Regulatory Commission.

ACTION: Final rule.

SUMMARY: The Commission is making changes to the Competitive Product List, including adding a Global Plus 1 contract. This is consistent with changes in a recent law governing postal operations. Republication of the lists of market dominant and competitive products is also consistent with requirements in the new law.

DATES: Effective August 17, 2009 and is applicable beginning July 31, 2009.

FOR FURTHER INFORMATION CONTACT: Stephen L. Sharfman at 202–789–6820 or *stephen.sharfman@prc.gov.*

SUPPLEMENTARY INFORMATION: *Regulatory History*, 74 FR 36276 (July 22, 2009).

I. Introduction
II. Background
III. Comments
IV. Commission Analysis
V. Ordering Paragraphs

I. Introduction

The Postal Service proposes to add a specific Global Plus 1 contract to the Global Plus Contracts product established in Docket No. CP2008–8. For the reasons discussed below, the Commission approves the Postal Service's proposal.

II. Background

On July 13, 2009, the Postal Service filed a notice, pursuant to 39 CFR 3015.5, announcing that it has entered into two additional Global Plus 1 contracts, which it states fit within the previously established Global Plus Contracts product.[1] The Postal Service

[1] Notice of the United States Postal Service of Filing Two Functionally Equivalent Global Plus 1

states that each contract is functionally equivalent to previously submitted Global Plus 1 contracts, are filed in accordance with Order No. 85, and are supported by Governors' Decision No. 08–8 filed in Docket No. CP2008–8.[2] Notice at 1.

The Notice also states that in Docket No. CP2008–8, the Governors established prices and classifications for competitive products not of general applicability for Global Plus Contracts.[3] The Postal Service states that the instant contract is the immediate successor contract to Docket No. CP2008–9 which is to expire soon, which the Commission found to be functionally equivalent in Order No. 85. *Id.* at 2.

The Postal Service contends that the instant contract should be included within the Global Plus 1 product on the Competitive Product List. *Id.* at 1.

In support, the Postal Service has also filed a redacted version of each contract and related materials as Attachment 1–A. A redacted version of the certified statement required by 39 CFR 3015.5 is included as Attachment 2–A. The Postal Service requests that the instant contract ''be considered the new 'baseline' contract[s] for future functional equivalency analyses concerning this product.'' *Id.* at 2.

The Postal Service filed the instant contract pursuant to 39 CFR 3015.5. The contract becomes effective August 1, 2009, unless regulatory reviews affect that date, and has a one-year term.

The Postal Service maintains that certain portions of this contract and certified statement required by 39 CFR 3015.5(c)(2), containing names and identifying information of the Global Plus 1 customer, related financial information, as well as the accompanying analyses that provide prices, terms, conditions, and financial projections should remain under seal. *Id.* at 3.

The Postal Service asserts the contract is functionally equivalent with the contract filed in Docket No. CP2009–47 because they share similar cost and market characteristics. It contends that they should be classified as a single product. *Id.* It states that while the existing contracts filed in Docket Nos. CP2008–9 and CP2008–10 exhibited minor distinctions, the new contracts are virtually identical to one another. *Id.* at 4.

The Postal Service maintains these differences only add detail or amplify processes included in prior Global Plus 1 contracts. It contends because the instant contract has the same cost attributes and methodology as well as similar cost and market characteristics the differences do not affect the fundamental service being offered or the essential structure of the contract. *Id.* at 7–8. It states the contract is substantially similar both to the existing contract in Docket No. CP2008–9 and to the existing Global Plus 1 contracts and should be added to the Global Plus 1 product. *Id.* at 8.

In Order No. 249, the Commission gave notice of the docket, appointed a Public Representative, and provided the public with an opportunity to comment.[4]

On July 22, 2009, Chairman's Information Request No. 1 (CHIR No. 1) was issued with responses due by July 27, 2009. On July 24, 2009, the Postal Service provided its responses to CHIR No. 1.

III. Comments

Comments were filed by the Public Representative.[5] No other interested parties submitted comments. The Public Representative states the individual contracts appear to satisfy the statutory criteria, but because of the timeframe to provide comments and information identified in CHIR No. 1, his response is not an unqualified recommendation in support of each contract's approval. *Id.* at 2. He notes that relevant provisions of 39 U.S.C. 3632, 3633 and 3642 appear to be met by these additional Global Plus 1 contracts. *Id.* The Public Representative states that he believes the contracts are functionally equivalent to the existing Global Plus Contracts product. He also determines that the Postal Service has provided greater transparency and accessibility in its filings. *Id.* at 3.

The Public Representative notes that the general public benefits from the availability of these contracts in several ways: Well prepared international mail adds increased efficiency in the mailstream, enhanced volume results in timeliness in outbound shipments to all countries including those with small volume, and the addition of shipping options may result in expansion of mail volumes, particularly with the incentives for Postal Qualified Mailers (PQMs) and increased efficiency in existing postal capacity. *Id.* at 4–5.

Finally, he discusses the need for self-contained docket filings. In particular, he notes that the instant contract relies on data from the most recent International Cost and Revenue Analysis (ICRA), which was filed under seal in another docket. He suggests that the Postal Service should identify the location of the ICRA utilized and cited in that docket. *Id.* at 6.

IV. Commission Analysis

The Postal Service proposes to add an additional contract under the Global Plus Contracts product that was created in Docket No. CP2008–8. As filed, this docket presents two issues for the Commission to consider: (1) Whether the contract satisfies 39 U.S.C. 3633, and (2) whether the contract is functionally equivalent to previously reviewed Global Plus 1 contracts. In reaching its conclusions, the Commission has reviewed the Notice, the contract and the financial analyses provided under seal, supplemental information, and the Public Representative's comments.

Statutory requirements. The Postal Service contends that the instant contract and supporting documents filed in this docket establish compliance with the statutory provisions applicable to rates for competitive products (39 U.S.C. 3633). Notice at 2. J. Ron Poland, Manager, Statistical Programs, Finance Department asserts Governors' Decision No. 08–8 for Global Plus Contracts establishes price floor and ceiling formulas issued on May 28, 2008. He certifies that the pricing in the instant contract meets the Governors' pricing formula and meets the criteria of 39 U.S.C. 3633(a)(1), (2) and (3). He further states that the prices demonstrate that the contract and the included ancillary services should cover their attributable costs, preclude the subsidization of competitive products by market dominant products, and should not impair the ability of competitive products on the whole to cover an appropriate share of institutional costs. *Id.,* Attachment 2–A.

For his part, the Public Representative indicates that the contract appears to satisfy 39 U.S.C. 3633. Public Representative Comments at 1–3.

Based on the review of the data submitted, including the supplemental

Contracts Negotiated Service Agreements, July 13, 2009 (Notice). While the Notice was filed jointly in Docket Nos. CP2009–46 and CP2009–47, the Commission will address the issues in these dockets in separate orders. The Postal Service requests that the two contracts be included in the Global Plus 1 product, and ''that they be considered the new 'baseline' contracts for future functional equivalency analyses...'' *Id.* at 2.

[2] *See* Docket Nos. CP2008–8 through CP2008–10, Order Concerning Global Plus Negotiated Service Agreements, June 27, 2008 (Order No. 85).

[3] *See* Docket No.CP2008–8, Notice of United States Postal Service of Governors' Decision Establishing Prices and Classifications for Global Plus Contracts, June 2, 2008, at 1.

[4] Notice and Order Concerning Two Functionally Equivalent Global Plus 1 Contracts Negotiated Service Agreements, July 16, 2009 (Order No. 249).

[5] Public Representative Comments in Response to Order No. 249, July 23, 2009 (Public Representative Comments). The Public Representative's comments jointly address the Postal Service's filings in Docket Nos. CP2009–46 and CP2009–47.

information, the Commission finds that the contract should cover its attributable costs (39 U.S.C. 3633(a)(2)), should not lead to the subsidization of competitive products by market dominant products (39 U.S.C. 3633(a)(1)), and should have a positive effect on competitive products' contribution to institutional costs (39 U.S.C. 3633(a)(3)). Thus, an initial review of the contract indicates that it comports with the provisions applicable to rates for competitive products.

Functional equivalence. The Postal Service asserts that the instant contract is functionally equivalent to the contract filed in the companion proceeding, Docket No. CP2009–47, as well as with Global Plus 1 contracts filed previously because they share similar cost and market characteristics. Notice at 4. The Postal Service states that the customers under the existing and proposed contracts are the same. In addition, it notes that existing contracts exhibited some differences, the contracts proposed in Docket No. CP2009–46 and CP2009–47 are virtually identical. *Id.*

Having reviewed the contracts filed in the instant proceeding and in Docket No. CP2009–47, and the Postal Service's justification, the Commission finds that the two contracts may be treated as functionally equivalent.

New baseline. The Postal Service requests that the contracts filed in Docket Nos. CP2009–46 and 2009–47 be included in the Global Plus 1 product and ''considered the new 'baseline' contracts for purposes of future functional equivalency analyses concerning this product.'' Notice at 2. Currently, the Global Plus 1 product consists of two existing contracts that will be superseded by the contracts in Docket Nos. CP2009–46 and CP2009–47. Under those circumstances, the new contracts need not be designated as a new product. Accordingly, the new contracts in Docket Nos. CP2009–46 and CP2009–47 will be included in the Global Plus 1 product and become the ''baseline'' for future functional equivalency analyses regarding that product.

Self-contained docket filings. The Public Representative reiterates a point made in Order No. 247 regarding the need for self-contained docket filings. In particular, he points to the difficulty in obtaining IRCA data relied on to support the instant contract but filed under seal in another docket. He suggests that ''filings that reference the ICRA should include a pointer to the location of the ICRA utilized and cited in that docket.'' Public Representative Comments at 6.

The Public Representative point is well taken. The Commission does not wish to burden the Postal Service with extraneous filing requirements, nor does it intend for the process of reviewing Postal Service filings to become labyrinthine. Recognizing that Postal Service filings are electronic, the Commission will adopt the following policy: 1. The redacted Governors' Decision on which the contract is based should be included with the filing; 2. an html link should be provided to the document filed by the Postal Service that notices that the unredacted Governors' Decision is being filed under seal; and 3. all other confidential data relied on to support the specific contract should be filed in the docket in which that specific contract is filed.

Other considerations. If the agreement terminates earlier than anticipated, the Postal Service shall promptly inform the Commission of the new termination date.

In conclusion, the Commission finds that the negotiated service agreement submitted in Docket No. CP2009–46 is appropriately included within the Global Plus Contracts product.

V. Ordering Paragraphs

It is ordered:

1. The contract filed in Docket No. CP2009–46 is included within the Global Plus 1 product (CP2008–8 and CP2009–46).

2. The existing Global Plus 1 product (CP2008–9 and CP2008–10) is removed from the product list.

3. As discussed in the body of this order, future contract filings which rely on materials filed under seal in other dockets should be self-contained.

4. The Postal Service shall notify the Commission if the termination date changes as discussed in this order.

List of Subjects in 39 CFR Part 3020

Administrative practice and procedure; Postal Service.

Issued: July 31, 2009.

By the Commission.

Judith M. Grady,

Acting Secretary.

■ For the reasons stated in the preamble, under the authority at 39 U.S.C. 503, the Postal Regulatory Commission amends 39 CFR part 3020 as follows:

PART 3020—PRODUCT LISTS

■ 1. The authority citation for part 3020 continues to read as follows:

Authority: 39 U.S.C. 503; 3622; 3631; 3642; 3682.

■ 2. Revise Appendix A to Subpart A of Part 3020—Mail Classification Schedule to read as follows:

Appendix to Subpart A of Part 3020—Mail Classification Schedule

Part A—Market Dominant Products

1000 Market Dominant Product List

First-Class Mail
- Single-Piece Letters/Postcards
- Bulk Letters/Postcards
- Flats
- Parcels
- Outbound Single-Piece First-Class Mail International
- Inbound Single-Piece First-Class Mail International

Standard Mail (Regular and Nonprofit)
- High Density and Saturation Letters
- High Density and Saturation Flats/Parcels
- Carrier Route
- Letters
- Flats
- Not Flat-Machinables (NFMs)/Parcels

Periodicals
- Within County Periodicals
- Outside County Periodicals

Package Services
- Single-Piece Parcel Post
- Inbound Surface Parcel Post (at UPU rates)
- Bound Printed Matter Flats
- Bound Printed Matter Parcels
- Media Mail/Library Mail

Special Services
- Ancillary Services
- International Ancillary Services
- Address List Services
- Caller Service
- Change-of-Address Credit Card Authentication
- Confirm
- International Reply Coupon Service
- International Business Reply Mail Service
- Money Orders
- Post Office Box Service

Negotiated Service Agreements
- HSBC North America Holdings Inc. Negotiated Service Agreement
- Bookspan Negotiated Service Agreement
- Bank of America Corporation Negotiated Service Agreement
- The Bradford Group Negotiated Service Agreement
- Inbound International
- Canada Post—United States Postal Service Contractual Bilateral Agreement for Inbound Market Dominant Services

Market Dominant Product Descriptions

First-Class Mail
[Reserved for Class Description]
- Single-Piece Letters/Postcards
  - [Reserved for Product Description]
- Bulk Letters/Postcards
  - [Reserved for Product Description]
- Flats
  - [Reserved for Product Description]
- Parcels
  - [Reserved for Product Description]
- Outbound Single-Piece First-Class Mail International
  - [Reserved for Product Description]
- Inbound Single-Piece First-Class Mail International
  - [Reserved for Product Description]

Standard Mail (Regular and Nonprofit)
[Reserved for Class Description]
- High Density and Saturation Letters
  - [Reserved for Product Description]

High Density and Saturation Flats/Parcels
[Reserved for Product Description]
Carrier Route
[Reserved for Product Description]
Letters
[Reserved for Product Description]
Flats
[Reserved for Product Description]
Not Flat-Machinables (NFMs)/Parcels
[Reserved for Product Description]
Periodicals
[Reserved for Class Description]
Within County Periodicals
[Reserved for Product Description]
Outside County Periodicals
[Reserved for Product Description]
Package Services
[Reserved for Class Description]
Single-Piece Parcel Post
[Reserved for Product Description]
Inbound Surface Parcel Post (at UPU rates)
[Reserved for Product Description]
Bound Printed Matter Flats
[Reserved for Product Description]
Bound Printed Matter Parcels
[Reserved for Product Description]
Media Mail/Library Mail
[Reserved for Product Description]
Special Services
[Reserved for Class Description]
Ancillary Services
[Reserved for Product Description]
Address Correction Service
[Reserved for Product Description]
Applications and Mailing Permits
[Reserved for Product Description]
Business Reply Mail
[Reserved for Product Description]
Bulk Parcel Return Service
[Reserved for Product Description]
Certified Mail
[Reserved for Product Description]
Certificate of Mailing
[Reserved for Product Description]
Collect on Delivery
[Reserved for Product Description]
Delivery Confirmation
[Reserved for Product Description]
Insurance
[Reserved for Product Description]
Merchandise Return Service
[Reserved for Product Description]
Parcel Airlift (PAL)
[Reserved for Product Description]
Registered Mail
[Reserved for Product Description]
Return Receipt
[Reserved for Product Description]
Return Receipt for Merchandise
[Reserved for Product Description]
Restricted Delivery
[Reserved for Product Description]
Shipper-Paid Forwarding
[Reserved for Product Description]
Signature Confirmation
[Reserved for Product Description]
Special Handling
[Reserved for Product Description]
Stamped Envelopes
[Reserved for Product Description]
Stamped Cards
[Reserved for Product Description]
Premium Stamped Stationery
[Reserved for Product Description]
Premium Stamped Cards
[Reserved for Product Description]
International Ancillary Services
[Reserved for Product Description]
International Certificate of Mailing
[Reserved for Product Description]
International Registered Mail
[Reserved for Product Description]
International Return Receipt
[Reserved for Product Description]
International Restricted Delivery
[Reserved for Product Description]
Address List Services
[Reserved for Product Description]
Caller Service
[Reserved for Product Description]
Change-of-Address Credit Card Authentication
[Reserved for Product Description]
Confirm
[Reserved for Product Description]
International Reply Coupon Service
[Reserved for Product Description]
International Business Reply Mail Service
[Reserved for Product Description]
Money Orders
[Reserved for Product Description]
Post Office Box Service
[Reserved for Product Description]
Negotiated Service Agreements
[Reserved for Class Description]
HSBC North America Holdings Inc. Negotiated Service Agreement
[Reserved for Product Description]
Bookspan Negotiated Service Agreement
[Reserved for Product Description]
Bank of America Corporation Negotiated Service Agreement
The Bradford Group Negotiated Service Agreement

Part B—Competitive Products

2000 Competitive Product List

Express Mail

Express Mail
Outbound International Expedited Services
Inbound International Expedited Services
Inbound International Expedited Services 1 (CP2008–7)
Inbound International Expedited Services 2 (MC2009–10 and CP2009–12)

Priority Mail

Priority Mail
Outbound Priority Mail International
Inbound Air Parcel Post
Royal Mail Group Inbound Air Parcel Post Agreement

Parcel Select

Parcel Return Service

International

International Priority Airlift (IPA)
International Surface Airlift (ISAL)
International Direct Sacks—M–Bags
Global Customized Shipping Services
Inbound Surface Parcel Post (at non-UPU rates)
Canada Post—United States Postal service Contractual Bilateral Agreement for Inbound Competitive Services (MC2009–8 and CP2009–9)
International Money Transfer Service
International Ancillary Services

Special Services

Premium Forwarding Service

Negotiated Service Agreements

Domestic
Express Mail Contract 1 (MC2008–5)
Express Mail Contract 2 (MC2009–3 and CP2009–4)
Express Mail Contract 3 (MC2009–15 and CP2009–21)
Express Mail Contract 4 (MC2009–34 and CP2009–45)
Express Mail & Priority Mail Contract 1 (MC2009–6 and CP2009–7)
Express Mail & Priority Mail Contract 2 (MC2009–12 and CP2009–14)
Express Mail & Priority Mail Contract 3 (MC2009–13 and CP2009–17)
Express Mail & Priority Mail Contract 4 (MC2009–17 and CP2009–24)
Express Mail & Priority Mail Contract 5 (MC2009–18 and CP2009–25)
Express Mail & Priority Mail Contract 6 (MC2009–31 and CP2009–42)
Express Mail & Priority Mail Contract 7 (MC2009–32 and CP2009–43)
Express Mail & Priority Mail Contract 8 (MC2009–33 and CP2009–44)
Parcel Return Service Contract 1 (MC2009–1 and CP2009–2)
Priority Mail Contract 1 (MC2008–8 and CP2008–26)
Priority Mail Contract 2 (MC2009–2 and CP2009–3)
Priority Mail Contract 3 (MC2009–4 and CP2009–5)
Priority Mail Contract 4 (MC2009–5 and CP2009–6)
Priority Mail Contract 5 (MC2009–21 and CP2009–26)
Priority Mail Contract 6 (MC2009–25 and CP2009–30)
Priority Mail Contract 7 (MC2009–25 and CP2009–31)
Priority Mail Contract 8 (MC2009–25 and CP2009–32)
Priority Mail Contract 9 (MC2009–25 and CP2009–33)
Priority Mail Contract 10 (MC2009–25 and CP2009–34)
Priority Mail Contract 11 (MC2009–27 and CP2009–37)
Priority Mail Contract 12 (MC2009–28 and CP2009–38)
Priority Mail Contract 13 (MC2009–29 and CP2009–39)
Priority Mail Contract 14 (MC2009–30 and CP2009–40)
Outbound International
Direct Entry Parcels Contracts
Direct Entry Parcels 1 (MC2009–26 and CP2009–36)
Global Direct Contracts (MC2009–9, CP2009–10, and CP2009–11)
Global Expedited Package Services (GEPS) Contracts
GEPS 1 (CP2008–5, CP2008–11, CP2008–12, and CP2008–13, CP2008–18, CP2008–19, CP2008–20, CP2008–21, CP2008–22, CP2008–23, and CP2008–24)
Global Plus Contracts
Global Plus 1 (CP2008–8 and CP2008–46)
Global Plus 2 (MC2008–7, CP2008–16 and CP2008–17)
Inbound International
Inbound Direct Entry Contracts with Foreign Postal Administrations (MC2008–6, CP2008–14 and CP2008–15)

International Business Reply Service
Competitive Contract 1 (MC2009–14 and CP2009–20)

Competitive Product Descriptions

Express Mail [Reserved for Group Description]
Express Mail [Reserved for Product Description]
Outbound International Expedited Services [Reserved for Product Description]
Inbound International Expedited Services [Reserved for Product Description]
Priority [Reserved for Product Description]
Priority Mail [Reserved for Product Description]
Outbound Priority Mail International [Reserved for Product Description]
Inbound Air Parcel Post [Reserved for Product Description]
Parcel Select [Reserved for Group Description]
Parcel Return Service [Reserved for Group Description]
International [Reserved for Group Description]
International Priority Airlift (IPA) [Reserved for Product Description]
International Surface Airlift (ISAL) [Reserved for Product Description]
International Direct Sacks—M–Bags [Reserved for Product Description]
Global Customized Shipping Services [Reserved for Product Description]
International Money Transfer Service [Reserved for Product Description]
Inbound Surface Parcel Post (at non-UPU rates) [Reserved for Product Description]
International Ancillary Services [Reserved for Product Description]
International Certificate of Mailing [Reserved for Product Description]
International Registered Mail [Reserved for Product Description]
International Return Receipt [Reserved for Product Description]
International Restricted Delivery [Reserved for Product Description]
International Insurance [Reserved for Product Description]
Negotiated Service Agreements [Reserved for Group Description]
Domestic [Reserved for Product Description]
Outbound International [Reserved for Group Description]

Part C—Glossary of Terms and Conditions [Reserved]

Part D—Country Price Lists for International Mail [Reserved]

[FR Doc. E9–19440 Filed 8–14–09; 8:45 am]

BILLING CODE 7710–FW–P

ENVIRONMENTAL PROTECTION AGENCY

40 CFR Part 52

[EPA–R09–OAR–2009–0521; FRL–8946–2]

Interim Final Determination To Stay and Defer Sanctions, Pinal County, AZ

AGENCY: Environmental Protection Agency (EPA).

ACTION: Interim final rule.

SUMMARY: EPA is making an interim final determination to stay and defer imposition of sanctions based on a proposed approval of revisions to the Pinal County portion of the Arizona State Implementation Plan (SIP) published elsewhere in today's **Federal Register.** The revisions concern Pinal County Rules 2–8–320, 4–2–020, 4–2–030, 4–4, 4–5, 4–7, and 4–9.

DATES: This interim final determination is effective on August 17, 2009. However, comments will be accepted until September 16, 2009.

ADDRESSES: Submit comments, identified by docket number EPA–R09–OAR–2009–0521, by one of the following methods:

1. *Federal eRulemaking Portal: www.regulations.gov.* Follow the on-line instructions.
2. *E-mail: steckel.andrew@epa.gov.*
3. *Mail or deliver:* Andrew Steckel (Air–4), U.S. Environmental Protection Agency Region IX, 75 Hawthorne Street, San Francisco, CA 94105–3901.

Instructions: All comments will be included in the public docket without change and may be made available online at *www.regulations.gov*, including any personal information provided, unless the comment includes Confidential Business Information (CBI) or other information whose disclosure is restricted by statute. Information that you consider CBI or otherwise protected should be clearly identified as such and should not be submitted through *www.regulations.gov* or e-mail. *www.regulations.gov* is an ''anonymous access'' system, and EPA will not know your identity or contact information unless you provide it in the body of your comment. If you send e-mail directly to EPA, your e-mail address will be automatically captured and included as part of the public comment. If EPA cannot read your comment due to technical difficulties and cannot contact you for clarification, EPA may not be able to consider your comment.

Docket: The index to the docket for this action is available electronically at *www.regulations.gov* and in hard copy at EPA Region IX, 75 Hawthorne Street, San Francisco, California. While all documents in the docket are listed in the index, some information may be publicly available only at the hard copy location (e.g., copyrighted material), and some may not be publicly available in either location (e.g., CBI). To inspect the hard copy materials, please schedule an appointment during normal business hours with the contact listed in the **FOR FURTHER INFORMATION CONTACT** section.

FOR FURTHER INFORMATION CONTACT: Andrew Steckel, EPA Region IX, (415) 947–4115, *steckel.andrew@epa.gov.*

SUPPLEMENTARY INFORMATION: Throughout this document, ''we'', ''us'' and ''our'' refer to EPA.

I. Background

On August 1, 2007 (*see* 72 FR 48196), we published a limited approval and limited disapproval of Pinal County Rules 4–2–020, 4–2–030, 4–2–040, and 4–2–050 as adopted locally on June 29, 1993 and submitted by the State on November 27, 1995. We based our limited disapproval action on certain deficiencies in the submittal. This disapproval action started a sanctions clock for imposition of offset sanctions 18 months after August 31, 2007 and highway sanctions 6 months later, pursuant to section 179 of the Clean Air Act (CAA) and our regulations at 40 CFR 52.31.

To correct the deficiencies identified in our August 1, 2007 final rule, Pinal County made the following changes to their regulations: On December 4, 2002, Pinal County amended Rules 4–2–020 and 4–2–030 and codified these changes on January 7, 2009; on January 7, 2009, Pinal County adopted Rule 2–8–320; and, on June 3, 2009, Pinal County adopted Rules 4–4, 4–7, 4–9 and amendments to Rule 4–5. On June 12, 2009, the State submitted these revisions to EPA. In the Proposed Rules section of today's **Federal Register,** we have proposed approval of this submittal because we believe it corrects the deficiencies identified in our August 1, 2007 disapproval action. Based on today's proposed approval, we are taking this final rulemaking action, effective on publication, to stay and defer imposition of sanctions that were triggered by our August 1, 2007 limited disapproval.

EPA is providing the public with an opportunity to comment on this stay and deferral of sanctions. If comments are submitted that change our assessment described in this final determination and the proposed full approval of new and revised Pinal County rules, we intend to take subsequent final action to reimpose

sanctions pursuant to 40 CFR 51.31(d). If no comments are submitted that change our assessment, then all sanctions and sanction clocks will be permanently terminated on the effective date of a final rule approval.

II. EPA Action

We are making an interim final determination to stay and defer CAA section 179 sanctions associated with our August 1, 2007 limited disapproval based on our concurrent proposal to approve the State's SIP revision as correcting deficiencies that initiated sanctions.

Because EPA has preliminarily determined that the State has corrected the deficiencies identified in EPA's limited disapproval action, relief from sanctions should be provided as quickly as possible. Therefore, EPA is invoking the good cause exception under the Administrative Procedure Act (APA) in not providing an opportunity for comment before this action takes effect (5 U.S.C. 553(b)(3)). However, by this action EPA is providing the public with a chance to comment on EPA's determination after the effective date, and EPA will consider any comments received in determining whether to reverse such action.

EPA believes that notice-and-comment rulemaking before the effective date of this action is impracticable and contrary to the public interest. EPA has reviewed the State's submittal and, through its proposed action, is indicating that it is more likely than not that the State has corrected the deficiencies that started the sanctions clocks. Therefore, it is not in the public interest to initially impose sanctions or to keep applied sanctions in place when the State has most likely done all it can to correct the deficiencies that triggered the sanctions clocks. Moreover, it would be impracticable to go through notice-and-comment rulemaking on a finding that the State has corrected the deficiencies prior to the rulemaking approving the State's submittal. Therefore, EPA believes that it is necessary to use the interim final rulemaking process to stay and defer sanctions while EPA completes its rulemaking process on the approvability of the State's submittal. Moreover, with respect to the effective date of this action, EPA is invoking the good cause exception to the 30-day notice requirement of the APA because the purpose of this notice is to relieve a restriction (5 U.S.C. 553(d)(1)).

III. Statutory and Executive Order Reviews

This action stays and defers federal sanctions and imposes no additional requirements.

Under Executive Order 12866 (58 FR 51735, October 4, 1993), this action is not a ''significant regulatory action'' and therefore is not subject to review by the Office of Management and Budget.

This action is not subject to Executive Order 13211, ''Actions Concerning Regulations That Significantly Affect Energy Supply, Distribution, or Use'' (66 FR 28355, May 22, 2001) because it is not a significant regulatory action.

The administrator certifies that this action will not have a significant economic impact on a substantial number of small entities under the Regulatory Flexibility Act (5 U.S.C. 601 *et seq.*).

This rule does not contain any unfunded mandate or significantly or uniquely affect small governments, as described in the Unfunded Mandates Reform Act of 1995 (Pub. L. 104–4).

This rule does not have tribal implications because it will not have a substantial direct effect on one or more Indian tribes, on the relationship between the Federal government and Indian tribes, or on the distribution of power and responsibilities between the Federal government and Indian tribes, as specified by Executive Order 13175 (65 FR 67249, November 9, 2000).

This action does not have Federalism implications because it does not have substantial direct effects on the States, on the relationship between the national government and the States, or on the distribution of power and responsibilities among the various levels of government, as specified in Executive Order 13132 (64 FR 43255, August 10, 1999).

This rule is not subject to Executive Order 13045, ''Protection of Children from Environmental Health Risks and Safety Risks'' (62 FR 19885, April 23, 1997), because it is not economically significant.

The requirements of section 12(d) of the National Technology Transfer and Advancement Act of 1995 (15 U.S.C. 272) do not apply to this rule because it imposes no standards.

This rule does not impose an information collection burden under the provisions of the Paperwork Reduction Act of 1995 (44 U.S.C. 3501 *et seq.*).

The Congressional Review Act, 5 U.S.C. 801 *et seq.,* as added by the Small Business Regulatory Enforcement Fairness Act of 1996, generally provides that before a rule may take effect, the agency promulgating the rule must submit a rule report to Congress and the Comptroller General. However, section 808 provides that any rule for which the issuing agency for good cause finds that notice and public procedure thereon are impracticable, unnecessary, or contrary to the public interest, shall take effect at such time as the agency promulgating the rule determines. 5 U.S.C. 808(2). EPA has made such a good cause finding, including the reasons therefor, and established an effective date of August 17, 2009. EPA will submit a report containing this rule and other required information to the U.S. Senate, the U.S. House of Representatives, and the Comptroller General of the United States prior to publication of the rule in the **Federal Register**. A major rule cannot take effect until 60 days after it is published in the **Federal Register.** This rule is not a ''major rule'' as defined by 5 U.S.C. 804(2).

Under section 307(b)(1) of the CAA, petitions for judicial review of this action must be filed in the United States Court of Appeals for the appropriate circuit by October 16, 2009. Filing a petition for reconsideration by the Administrator of this final rule does not affect the finality of this rule for the purpose of judicial review nor does it extend the time within which petition for judicial review may be filed, and shall not postpone the effectiveness of such rule or action. This action may not be challenged later in proceedings to enforce its requirements. (*See* section 307(b)(2)).

List of Subjects in 40 CFR Part 52

Environmental protection, Air pollution control, Intergovernmental regulations, Particulate matter, Reporting and recordkeeping requirements.

Dated: August 4, 2009.

Laura Yoshii,

Acting Regional Administrator, Region IX.

[FR Doc. E9–19654 Filed 8–14–09; 8:45 am]

BILLING CODE 6560–50–P

ENVIRONMENTAL PROTECTION AGENCY

40 CFR Part 300

[EPA–HQ–SFUND–2009–0227; FRL–8945–3]

National Oil and Hazardous Substance Pollution Contingency Plan; National Priorities List

AGENCY: Environmental Protection Agency.

ACTION: Direct Final Notice of Deletion of the Island Chemical Corp/Virgin

Islands Chemical Corp. Superfund Site from the National Priorities List.

SUMMARY: The Environmental Protection Agency (EPA) Region 2 is publishing a direct final Notice of Deletion of the Island Chemical Corp/Virgin Islands Chemical Corp. (Site), located in St. Croix, U.S. Virgin Islands, from the National Priorities List (NPL). The NPL, promulgated pursuant to section 105 of the Comprehensive Environmental Response, Compensation, and Liability Act (CERCLA) of 1980, as amended, is an appendix of the National Oil and Hazardous Substances Pollution Contingency Plan (NCP). This direct final deletion is being published by EPA with the concurrence of the territory of U.S. Virgin Islands, through the Virgin Islands Department of Planning and Natural Resources (VIDPNR), because EPA has determined that all appropriate response actions under CERCLA have been completed. However, this deletion does not preclude future actions under Superfund.

DATES: This direct final deletion is effective October 16, 2009 unless EPA receives adverse comments by September 16, 2009. If adverse comments are received, EPA will publish a timely withdrawal of the direct final deletion in the **Federal Register** informing the public that the deletion will not take effect.

ADDRESSES: Submit your comments, identified by Docket ID no. EPA–HQ–SFUND–2009–0227, by one of the following methods:

- *http://www.regulations.gov*. Follow on-line instructions for submitting comments.
- *E-mail: kwan.caroline@epa.gov*
- *Fax:* (212) 637–4284
- *Mail:* U.S. Environmental Protection Agency, Region 2, 290 Broadway, 20th floor, New York, NY 10007–1866
- *Hand delivery:* U.S. Environmental Protection Agency, Region 2, 290 Broadway, 20th floor, New York, NY. Such deliveries are only accepted during the Docket's normal hours of operation, and special arrangements should be made for deliveries of boxed information.

Instructions: Direct your comments to Docket ID no. EPA–HQ–SFUND–2009–0227. EPA's policy is that all comments received will be included in the public docket without change and may be made available online at *http://www.regulations.gov,* including any personal information provided, unless the comment includes information claimed to be Confidential Business Information (CBI) or other information whose disclosure is restricted by statute. Do not submit information that you consider to be CBI or otherwise protected through *http://www.regulations.gov* or e-mail. The *http://www.regulations.gov* Web site is an ''anonymous access'' system, which means EPA will not know your identity or contact information unless you provide it in the body of your comment. If you send an e-mail comment directly to EPA without going through *http://www.regulations.gov,* your e-mail address will be automatically captured and included as part of the comment that is placed in the public docket and made available on the Internet. If you submit an electronic comment, EPA recommends that you include your name and other contact information in the body of your comment and with any disk or CD–ROM you submit. If EPA cannot read your comment due to technical difficulties and cannot contact you for clarification, EPA may not be able to consider your comment. Electronic files should avoid the use of special characters, any form of encryption, and be free of any defects or viruses.

Docket: All documents in the docket are listed in the *http://www.regulations.gov* index. Although listed in the index, some information is not publicly available, e.g., CBI or other information whose disclosure is restricted by statue. Certain other material, such as copyrighted material, will be publicly available only in the hard copy. Publicly available docket materials are available either electronically in *http://www.regulations.gov* or in hard copy at:

U.S. Environmental Protection Agency, Region 2, 290 Broadway, Superfund Record, Center, Room 1828, New York, NY 10007–1866, Hours: Monday to Friday from 9 a.m. to 5 p.m., Telephone No. (212) 637–4308.

Department of Planning and Natural Resources, 45 Mars Hill, Frederiksted, U.S. Virgin Islands, 00850, Hours: Monday to Friday from 9 a.m. to 5 p.m., Telephone No. (340) 773–1082.

U.S. Environmental Protection Agency, Caribbean Environmental Protection Division, Tunick Building, Suite 102, 1336 Beltjen Road, St. Thomas, VI 00801, Hours: Monday to Friday from 9 a.m. to 5 p.m., Telephone No. (340) 714–2333.

FOR FURTHER INFORMATION CONTACT: Ms.Caroline Kwan, Remedial Project Manager, U.S. Environmental Protection Agency, Region 2, 290 Broadway, 20th floor, New York, NY 10007–1866, (212) 637–4275, e-mail: *kwan.caroline@epa.gov*

SUPPLEMENTARY INFORMATION:

Table of Contents

I. Introduction
II. NPL Deletion Criteria
III. Deletion Procedures
IV. Basis for Site Deletion
V. Deletion Action

I. Introduction

EPA Region 2 is publishing this direct final Notice of Deletion of the Island Chemical Corp/Virgin Islands Chemical Corp. Superfund Site (Site), from the NPL. The NPL constitutes Appendix B of 40 CFR part 300, which is the Oil and Hazardous Substances Pollution Contingency Plan (NCP), which EPA promulgated pursuant to section 105 of the Comprehensive Environmental Response, Compensation and Liability Act (CERCLA) of 1980, as amended. EPA maintains the NPL as the list of sites that appear to present a significant risk to public health, welfare, or the environment. Sites on the NPL may be the subject of remedial actions financed by the Hazardous Substance Superfund (Fund). As described in 300.425(e) (3) of the NCP, sites deleted from the NPL remain eligible for Fund-financed remedial actions if future conditions warrant such actions.

Because EPA considers this action to be noncontroversial and routine, this action will be effective October 16, 2009 unless EPA receives adverse comments by September 16, 2009. Along with this direct final Notice of Deletion, EPA is co-publishing a Notice of Intent to Delete in the ''Proposed Rules'' section of the **Federal Register**. If adverse comments are received within the 30-day public comment period on this deletion action, EPA will publish a timely withdrawal of this direct final Notice of Deletion before the effective date of the deletion, and the deletion will not take effect. EPA will, as appropriate, prepare a response to comments and continue with the deletion process on the basis of the Notice of Intent to Delete and the comments already received. There will be no additional opportunity to comment.

Section II of this document explains the criteria for deleting sites from the NPL. Section III discusses procedures that EPA is using for this action. Section IV discusses the VICHEM Superfund Site and demonstrates how it meets the deletion criteria. Section V discusses EPA's action to delete the Site from the NPL unless adverse comments are received during the public comment period.

II. NPL Deletion Criteria

The NCP establishes the criteria that EPA uses to delete sites from the NPL.

In accordance with 40 CFR 300.425(e), sites may be deleted from the NPL where no further response is appropriate. In making such a determination pursuant to 40 CFR 300.425(e), EPA will consider, in consultation with the state, whether any of the following criteria have been met:

i. Responsible parties or other persons have implemented all appropriate response actions required;

ii. All appropriate Fund-financed response under CERCLA has been implemented, and no further response action by responsible parties is appropriate; or

iii. The remedial investigation has shown that the release poses no significant threat to public health or the environment and, therefore, the taking of remedial measures is not appropriate.

III. Deletion Procedures

The following procedures apply to deletion of the Site:

(1) EPA consulted with the territory of U.S. Virgin Islands prior to developing this direct final Notice of Deletion and the Notice of Intent to Delete co-published today in the ''Proposed Rules'' section of the **Federal Register**.

(2) EPA has provided the territory 30 working days for review of this notice and the parallel Notice of Intent to Delete prior to their publication today, and the territory, through the VIDPNR has concurred on the deletion of the Site from the NPL.

(3) Concurrently with the publication of this direct final Notice of Deletion, a notice of the availability of the parallel Notice of Intent to Delete is being published in the Virgin Islands Daily News. The newspaper notice announces the 30-day public comment period concerning the Notice of Intent to Delete the Site from the NPL.

(4) The EPA placed copies of documents supporting the proposed deletion in the deletion docket and made these items available for public inspection and copying at the Site information repositories identified above.

(5) If adverse comments are received within the 30-day public comment period on this deletion action, EPA will publish a timely notice of withdrawal of this direct final Notice of Deletion before its effective date and will prepare a response to comments and continue with the deletion process on the basis of the Notice of Intent to Delete and the comments already received.

Deletion of a site from the NPL does not itself create, alter, or revoke any individual's rights or obligations. Deletion of a site from the NPL does not in any way alter EPA's right to take enforcement actions, as appropriate. The NPL is designed primarily for informational purposes and to assist EPA management. Section 300.425(e)(3) of the NCP states that the deletion of a site from the NPL does not preclude eligibility for future response actions, should future conditions warrant such actions.

IV. Basis for Site Deletion

The following information provides EPA's rationale for deleting the Site from the NPL:

Site Background and History

The Site, EPA ID No. VID980651095, is located on Plot 13Q of Estate Bethlehem Middle Works in the south-central portion of St. Croix in the U.S. Virgin Islands. Plot 13Q is bordered to the north and east by an intermittent stream, the River Gut, which originates north of the Site and drains to the Caribbean Sea. The Site geology is characterized by approximately 85 feet of fill and Alluvial materials (sandy-clay to sandy-silt and clayey sand) overlying the clayey marl of the Kingshill Formation. Groundwater underlying the Site flows predominantly to the south-southeast. Land use surrounding the Site includes a mix of commercial and industrial purposes and the Site is zoned as I–2 (Light Industry).

Charles H. Steffey, Inc. (CHS, Inc.) purchased the VICHEM Site in 1968. At some point prior to 1969, CHS, Inc. changed its name to CHS Holding Corporation (CHS). From 1968 to 1982, the Site was used for the manufacture and blending of a variety of pharmaceutical products. By the end of 1982, the facility was permanently closed. CHS maintains ownership of the Site. Between 1984 and 1991, several investigations were conducted at the Site by EPA and a former tenant, Island Chemical Company, which was later acquired by Berlex Laboratories, Inc. (''Berlex''). This investigative work identified six areas of potential environmental concern:

—Laboratory and Warehouse Building;
—Above ground storage tank (AST) area;
—Former process pit (FPP) area;
—Loading dock/former laboratory pit area;
—Soil beneath concrete pad near ASTs;
—Concrete storage pad.

During initial stages of site assessment, both EPA and Berlex conducted response activities including soil excavation with on-Site treatment or off-Site disposal, drum removals, and off-Site disposal of AST contents. Between September 1989 and October 1991, EPA conducted a removal action at the Site. At that time, the laboratory/warehouse building was found to contain approximately 400 drums (some extremely deteriorated), leaking cylinders of chlorine and hydrogen chloride, and over 800 containers of laboratory reagents that included sodium metal, potassium cyanide, and ethyl ether. EPA removed 354 drums containing 14,720 gallons of various chemicals and 8,061 pounds of lab pack chemicals from the laboratory/warehouse building.

The Site was proposed to the NPL on January 18, 1994 (59 FR 2568) and subsequently added on June 17, 1996 (61 FR 30510).

Remedial Investigation/Feasibility Study

On September 29, 1994, EPA entered into an Administrative Order on Consent (AOC), Index No. II CERCLA–94–0401, with Berlex and Island Chemical Company; Pierrel S.p.A, a subsidiary of Pharmacia & Upjohn, Inc. (''P&U'') and also a former tenant at the Site, was added as a respondent to the AOC in April 1999. The AOC, pursuant to Section 106(a) of the Comprehensive Environmental Response, Compensation, and Liability Act (CERCLA), as amended, 42 U.S.C. 9606(a), required the performance of a Remedial Investigation/Feasibility Study (RI/FS) at the Site.

The primary objectives of the RI were to: (1) Collect the data needed to characterize the nature and extent of contamination and adequately support human health and ecological baseline risk assessments and (2) provide a basis on which a subsequent, cost-effective, remedial action plan would be recommended. All six areas of potential concern were investigated during the initial assessment and the subsequent RI, along with the nature and extent of soil and groundwater contamination, and potential off-Site sediment contamination. Based on the data collected, only the AST and FPP areas were determined to require remediation. Contaminants of concern at the Site included ethylbenzene and xylene, in soils and groundwater at the AST area and chloroform in groundwater at the FPP area. The Site posed potential threats to human health and the environment through ingestion associated with contaminated soil and groundwater.

As part of the RI/FS, the PRPs implemented a field Pilot Test of Soil Vapor Extraction/Air Sparging (SVE/AS) in February 2000. Following successful completion of the Pilot Test and with the approval of EPA and the VIDPNR, an SVE/AS system for the AST area was

placed in continuous operation in June 2001 by the PRPs.

A chain link fence was installed in the spring of 2000 along the property line to secure the area from unauthorized access, and in the spring of 2002, the PRPs demolished the site buildings and removed and disposed/recycled all of the tanks and related equipment.

Selected Remedy

Based on the human health risk assessment, the remedial action objectives for the Site were:

- Mitigate the toxicity, mobility, and/or volume of VOCs (ethylbenzene and xylene) in soils in the AST area to minimize continued leaching to groundwater;
- Mitigate the toxicity, mobility, and/or volume of VOCs (ethylbenzene and xylene) in groundwater in the AST area and downgradient so as to achieve Maximum Contaminant Levels (MCLs) and protect potential future groundwater users;
- Mitigate the toxicity, mobility, and/or volume of chloroform in groundwater in the FPP area and downgradient so as to achieve MCLs and protect future potential groundwater users; and
- Restrict on-site groundwater use to non-potable purposes until the water quality is restored to MCLs.

On August 14, 2002, the Regional Administrator signed a Record of Decision (ROD) selecting the following remedy:

- SVE/AS to treat contaminated groundwater, saturated soil, and unsaturated soil at the AST source area;
- Monitored Natural Attenuation (MNA) to address low-level residual contamination in groundwater at the FPP area and downgradient areas; and
- Institutional controls (in the form of existing VIDPNR well permitting laws and regulations) to limit the pumping of groundwater at the Site to prevent interference with the selected remedy and to also prevent human exposure to contaminated groundwater until EPA's MCLs are achieved.

The ROD also selected groundwater pump and treat as a contingency remedy in the event that groundwater cleanup goals were not achieved in a reasonable time period.

Response Actions

In a Consent Decree with EPA, entered on March 5, 2004, the PRPs (Island Chemical Company, Berlex and P&U and successors in interest) agreed to perform the remedial design/remedial action (RD/RA) specified in the ROD. On a voluntary basis, the PRPs had been operating the SVE/AS system in the AST Area (which was consistent with the requirements of the ROD) since 2001, and an extensive network of monitoring wells was already in place. A formal remedial design phase was, therefore, not required by the Consent Decree, except in the event EPA determined that supplemental activities were required to achieve performance standards. The PRPs submitted a Remedial Action Work Plan (RAWP) in September 2004 that detailed all elements of the required remedial action.

SVE/System in AST Area

The SVE/AS system includes six SVE wells, one AS well, and eleven vapor monitoring probes, together with a surface vapor barrier that prevents short-circuiting of air flow and direct contact with surface soil. A groundwater monitoring network comprising a total of eight wells (shallow and deep) is also installed in the AST area. Continuous operation of the SVE/AS system by the PRPs from June 2001 through November 2003 removed approximately 2,030 pounds of AST area contaminants and reached asymptotically low limits of mass removal. Rebound testing indicated that negligible residual mass was left in the unsaturated zone. The mass removed correlates well with source mass estimates presented in the Feasibility Study (FS) of 1,900 pounds.

AST Area Groundwater Monitoring Results

AST Area groundwater was monitored quarterly commencing in June 2001, when the SVE/AS system was placed in continuous operation, including three events subsequent to shut down of the AS/SVE system on November 3, 2003. Groundwater concentrations were reduced from a high of 176,000 μg/L of total toluene, ethylbenzene and xylenes (TEX) in June 2001 (baseline levels) in the most contaminated well (MW–6), to 13 μg/L in September 2003, the last sampling event prior to the November 2003 shutdown of the SVE/AS system. Four other AST area groundwater monitoring locations remained below the ROD cleanup goals for the entire period, and were generally at or near non-detect levels from November 2001 onward.

Rebound and post-shut down evaluations performed in August 2002, December 2003, March 2004 and June 2004 indicated modest increases in groundwater concentrations, to levels generally below cleanup goals. Post-shutdown levels in MW–1 and MW–6 in June 2004 were reduced 88–99.99% from baseline concentrations in June 2001, confirming the permanence of the remediation. Concentrations in MW–6 decreased from 6,900 μg/L TEX in December 2003 to 14 μg/L TEX in June 2004. The concentrations in MW–1, which increased from December 2003 to March 2004 to 21,400 μg/L, decreased to 1,270 μg/L TEX in December 2004, as natural attenuation degraded the residual contaminant concentrations following source removal/treatment of the vadose zone (2,030 pounds removed via SVE). Wells located to the north of the AST Area, MW–8 and MW–10, were installed during the Remedial Investigation (RI) to monitor the possible off-property migration of contaminants although the predominant groundwater flow direction is to the south/southeast. These wells were sampled during the baseline event and in the three events since December 2003. In each event, concentrations of TEX were below 0.6 μg/L in MW–8 and MW–10, indicating that there is no migration of Site contaminants of concern (COCs) to the north.

Groundwater monitoring was performed semi-annually from 2004 to 2006. Three wells, MW–1, MW–6, and AST–VMP–3D, were monitored in the AST area for TEX parameters and a list of key intrinsic biodegradation parameters. All TEX results were below cleanup goals except for one detection of ethylbenzene at 1700 μg/in AST–VMP–3D in December 2004. EPA approved annual post remediation monitoring in the AST Area in April 2006. TEX concentrations remained below cleanup goals during three rounds of post remediation monitoring from 2006 to 2008. The highest TEX concentration in these wells decreased from 38 μg/L in May 2006 to non-detect in the last round, February 2008. Post-Remediation Monitoring at the AST Area has been completed in full satisfaction of the Consent Decree and associated Statement of Work.

AST Area Soil Confirmatory Sampling Results

Soil samples were collected in the AST area on a 25 foot by 25 foot grid pattern with vertical samples collected every 2 feet to the water table, in February 2004 and analyzed for site contaminant VOCs. The results demonstrated that contaminant levels were below cleanup goals in all samples analyzed. The highest depth averaged concentration of soil samples in one location were 369 μg/kg ethylbenzene and 296 μg/kg xylenes, compared with the ROD cleanup goals of 6,500 μg/kg and 90,000 μg/kg, respectively.

MNA in FPP Area

EPA selected MNA as the remedy for FPP Area groundwater, and chloroform concentrations in groundwater decreased sharply since 1998 such that the cleanup goal has been reached. From 1998 to June 2004, chloroform in MW–2, the source area of historically highest concentrations, decreased from 2,400 µg/L to 13 µg/L. Chloroform concentrations in the FPP Area have been consistently below the cleanup goal since 2000. MW–11, a downgradient well which had an increase in chloroform from 3J µg/L in 1998 to 40.4 µg/L in 2000, was below cleanup goals in 2004, indicating that chloroform has attenuated downgradient. Chloroform was not been detected in any of the AST Area wells, and methylene chloride (a potential degradation product of chloroform) was not detected above 1.0 µg/L in any FPP or AST wells up to June 2004.

In the FPP Area, annual post-remediation groundwater monitoring began in the 2nd quarter 2005. Three wells, MW–2, MW–7, and MW–11, were monitored for chloroform. Chloroform concentrations remained below cleanup goals during three rounds of post remediation monitoring from 2005 to 2007. Chloroform concentrations varied from non detect in May 2005 to 21 µg/L in May 2007, below the cleanup goals of 100 µg/L. Post-Remediation Monitoring at the FPP Area has been completed in full satisfaction of the Consent Decree and associated statement of work (SOW).

Based upon the soil and groundwater data, which indicated compliance with all cleanup goals, EPA determined that supplemental remedial construction activities were not necessary, and use of the contingency remedy of groundwater pump and treat would not be required in either the AST Area or FPP Area. Construction was, therefore, considered to be complete.

The SVE system was permanently shut down in November 2003 and the treatment system trailer removed in 2005. The SVE wells and monitoring wells at the Site have not been decommissioned. The PRPs are developing a plan to decommission these wells in the summer of 2009. The Remedial Action Report was submitted in September 2004 and the Final Post-Remediation Monitoring Report was submitted in April 2008. The final site inspection occurred on March 4, 2009.

Institutional Controls

The ROD indicated that VIDPNR, in consultation with EPA, would utilize institutional controls (in the form of existing well permitting laws and regulations) to limit the pumping of groundwater at the Site, to prevent interference with the selected remedy, and to also prevent human exposure to contaminated groundwater until ROD cleanup goals were achieved. Pursuant to the CD, on request from EPA, the PRPs were to seek an environmental easement/restrictive covenant to enforce land and groundwater use controls at the Site and other areas where VOC contamination exceeds ROD cleanup goals or where groundwater extraction could negatively impact the existing contaminant plume. The PRPs have maintained fencing around the site and maintained oversight of groundwater conditions during remediation. Based on these actions and the existence of well permitting requirements EPA did not require the PRPs to obtain the environmental easement/restrictive covenant. The Site has no hazardous substances, associated with the NPL release, remaining above levels that would prevent unlimited use and unrestricted exposure. The remedy is completed and no other operation and maintenance activities are required. The final Five-Year Review was signed on March 20, 2009.

Cleanup Goals

The cleanup goals for soils in the AST area are 6,500 µg/kg for ethylbenzene, and 90,000 µg/kg for xylene. For groundwater, the cleanup goals are 700 µg/L for ethylbenzene, 10,000 µg/L for xylene, and 100 µg/L for chloroform, respectively.

Community Involvement

Public participation activities for this Site have been satisfied as required in CERCLA § 113(k) and Section 117. As part of the remedy selection process, the public was invited to comment on EPA's proposed remedies. All other documents and information which EPA relied on or considered in recommending this deletion are available for the public to review at the information repositories identified above.

Determination That the Site Meets the Criteria for Deletion in the NCP

One of the three criteria for site deletion is when responsible parties or other persons have implemented all appropriate response actions required (40 CFR 300.425(e)(1)(I)). EPA, with the concurrence of the U.S. Virgin islands through VIDPNR, has determined that all required and appropriate response actions have been implemented by the responsible parties.

V. Deletion Action

The EPA, with concurrence of the U.S. Virgin Islands through the VIDPNR has determined that all appropriate response actions under CERCLA, have been completed. Therefore, EPA is deleting the Site from the NPL.

Because EPA considers this action to be noncontroversial and routine, EPA is taking it without prior publication. This action will be effective October 16, 2009 unless EPA receives adverse comments by September 16, 2009. If adverse comments are received within the 30-day public comment period, EPA will publish a timely withdrawal of this direct final notice of deletion before the effective date of the deletion, and it will not take effect. EPA will prepare a response to comments and continue with the deletion process on the basis of the notice of intent to delete and the comments already received. There will be no additional opportunity to comment.

List of Subjects in 40 CFR Part 300

Environmental protection, Air pollution control, Chemicals, Hazardous waste, Hazardous substances, Intergovernmental relations, Penalties, Reporting and recordkeeping requirements, Superfund, Water pollution control, Water supply.

Dated: August 3, 2009.

George Pavlou,

Acting Regional Administrator, Region 2.

■ For the reasons set out in this document, 40 CFR part 300 is amended as follows:

PART 300—[AMENDED]

■ 1. The authority citation for part 300 continues to read as follows:

Authority: 33 U.S.C. 1321(c)(2); 42 U.S.C. 9601–9657; E.O. 12777, 56 FR 54757, 3 CFR, 1991 Comp., p. 351; E.O. 12580, 52 FR 2923; 3 CFR, 1987 Comp., p. 193.

■ 2. Table 1 of Appendix B to part 300 is amended by removing the entry ''Island Chemical Corp/VI Chemical Corp'', ''Christiansted'', ''Virgin Islands''.

[FR Doc. E9–19679 Filed 8–14–09; 8:45 am]

BILLING CODE 6560–50–P

DEPARTMENT OF HOMELAND SECURITY

48 CFR Parts 3025 and 3052

[Docket No. DHS–2009–0081]

RIN 1601–AA57

Revision of Department of Homeland Security Acquisition Regulation; Restrictions on Foreign Acquisition (HSAR Case 2009–004)

AGENCY: Office of the Chief Procurement Officer, DHS.

ACTION: Interim rule with requests for comments.

SUMMARY: The Department of Homeland Security (DHS) is amending its Homeland Security Acquisition Regulation (HSAR) parts 3025 and 3052 to reflect a statutory change limiting the acquisition of products containing textiles from sources outside the United States.

DATES: *Effective Date:* August 17, 2009.

Comment Date: Comments and related material submitted electronically must be submitted to the Federal eRulemaking Portal *http://www.regulations.gov* on or before September 16, 2009. Comments and related material submitted by mail must reach the Department of Homeland Security, Office of the Chief Procurement Officer, Acquisition Policy and Legislation Branch at the address shown below on or before September 16, 2009, to be considered in the formation of the final rule.

ADDRESSES: You may submit comments identified by DHS docket number DHS–2009–0081, using any one of the following methods:

(1) Via the Internet at the Federal eRulemaking Portal: *http://www.regulations.gov.* Follow the instructions for submitting comments.

(2) By mail to the Department of Homeland Security, Office of the Chief Procurement Officer, Acquisition Policy and Legislation Branch, ATTN: Jeremy Olson, 245 Murray Drive, Bldg. 410 (RDS), Washington, DC 20528.

FOR FURTHER INFORMATION CONTACT: Jeremy Olson, Department of Homeland Security, Office of the Chief Procurement Officer, Acquisition Policy and Legislation Branch, (202) 447–5197.

SUPPLEMENTARY INFORMATION:

I. Request for Comments
II. Background
III. Discussion of Interim Rule
IV. Regulatory Requirements
A. Small Entity Analysis
B. Executive Order 12866 (Regulatory Planning and Review)
C. Assistance for Small Entities
D. Collection of Information
E. Determination to Issue an Interim Rule

I. Request for Comments

We encourage you to participate in this rulemaking by submitting comments and related materials. Comments and related materials should be organized by HSAR Part, and indicate the specific section or sections of the interim rule that is being commented on. All comments received will be posted without change to *http://www.regulations.gov,* including any personal information provided. *See* **ADDRESSES** above for information on how to submit comments. If you submit comments by mail, please submit them in an unbound format, no larger than 8½ by 11 inches, suitable for copying and electronic filing. You may submit comments either by mail or via the Internet as identified in the **ADDRESSES** section above; but to avoid duplication, DHS requests that you submit comments and materials by only one method. If you would like DHS to acknowledge receipt of comments submitted by mail, please enclose a self-addressed, stamped postcard or envelope. DHS will consider all comments and materials received during the comment period. We may change the final rule in view of them.

Viewing comments and documents: To view comments and read background documents related to this rulemaking, go to *http://www.regulations.gov,* type the docket number for this rulemaking, DHS–2009–0081, into the ''Search Documents'' field and click on ''Go>>.'' Individuals without Internet access can make alternate arrangements for viewing comments and documents related to this rulemaking by contacting DHS at the **FOR FURTHER INFORMATION CONTACT** information above.

II. Background

The American Recovery and Reinvestment Act of 2009 (''Recovery Act''), Public Law 111–5, 123 Stat. 115, 165–166 (Feb. 17, 2009), contains restrictions on the Department's acquisition of certain foreign textile products. Specifically, the Recovery Act at section 604, codified as 6 U.S.C. 453b, limits the Department's acquisition of foreign textile products under DHS contract actions entered into on or after August 16, 2009, using funds appropriated or otherwise made available to DHS on or before February 17, 2009, the date of the Act. DHS may not use those funds for the procurement of certain clothing and other textile items directly related to the national security interests of the United States if such items are not domestically grown, reprocessed, reused, or produced.

Section 604 does, however, contain exceptions. The law requires DHS to apply these restrictions in a manner consistent with United States obligations under international agreements (such as free trade agreements and the World Trade Organization Agreement on Government Procurement). Moreover, restrictions on some of the covered textile items do not apply to commercial item acquisitions. Also, the Recovery Act's restriction on the Department's acquisition of covered foreign textiles does not apply to purchases for amounts not greater than the simplified acquisition threshold (SAT) (currently $100,000), when covered items of satisfactory quality and sufficient quantity cannot be procured as needed at United States market prices, when a covered item contains less than 10% non-compliant fibers, when the procurement is made by vessels in foreign waters, or for emergency procurements outside of the United States.

This interim rule makes amendments to the Homeland Security Acquisition Regulation (HSAR) to add solicitation provisions, contract clauses and related policy statements implementing these requirements and exceptions for certain DHS contracts, option exercises and orders.

III. Discussion of Interim Rule

This rulemaking revises 48 CFR part 3025, Foreign Acquisitions, and part 3052, Solicitation Provisions and Contract Clauses, to limit acquisition of covered items for certain DHS acquisitions above the simplified acquisition threshold, unless DHS determines that such items qualify for a statutory exception. The rulemaking also implements the aspect of the law that requires that the restriction be applied in a manner consistent with United States obligations under international agreements.

The ''Buy American'' restriction in Section 604 of the Recovery Act only covers items ''directly related to the national security interests of the United States.'' The Act does not further define this qualifying phrase and the related congressional committee reports shed no further light on the scope, boundaries, or intention behind the phrase itself. The House of Representatives Conference Report describes section 604 generally by stating: ''The conferees include and modify a provision, as proposed by the House, related to the procurement of apparel and textile products by the Department of Homeland Security. This language is modeled after the Berry Amendment (10 U.S.C. 2533a), which

has required the Department of Defense to purchase domestically-manufactured textiles and apparel.'' H. Conf. Rep. No. 111–116, p. 438 (Feb 12, 2009). The Berry Amendment, however, does not employ the same ''national security interests'' phrase. Moreover, other Recovery Act acquisition restrictions, including section 1605 (which contemporaneously provided Government-wide restrictions on the use of Recovery Act funds to construct, alter, maintain, or repair public buildings or works unless all iron, steel, and manufactured goods that are used are produced in the United States) likewise do not contain this phrase.

Remarks from the floor of the House of Representatives concerning section 604 suggest deep concern ''that we could have people crossing the border illegally wearing [U.S. Customs and Border Protection] or [Transportation Security Administration] uniforms manufactured in foreign countries.'' 155 Cong. Rec. H620, H723 (Jan 28, 2009) (remarks of Committee on Homeland Security Chairman Hon. Bennie G. Thompson upon introduction of the Kissell amendment, which, with some adjustments, became section 604); *cf.* 153 Cong. Rec. H4646–H4655, H4651 (May 9, 2007) (remarks of Congressman Hayes, who in debate on a proposed, similarly worded amendment in the previous Congress said it ''* * * provides the assurance that the Department of Homeland Security officials who work on the front lines of national security are the only people wearing these sensitive uniforms.'').

Many different and diverse statutes, regulations and executive orders define the expressions ''national security'' and ''national security interests.'' The most common of these, used in connection with classification of information and personnel and facilities security, defines these terms to mean pertaining to ''the national defense or foreign relations of the United States.'' *See, e.g.,* Executive Order 12958, section 6.1(y) (term defined for order on classified national security information); 10 U.S.C. 801(16) (term defined for purposes of the Code of Military Justice). Other statutes employ other usages and definitions for these terms, which, when standing alone or when used with other words, fit the context and purpose of the particular statute. *See, e.g.,* 8 U.S.C. 1189(d)(2) (when used to determine threats posed by foreign terrorist organizations, ''means the national defense, foreign relations, or economic interests of the United States''); 39 CFR 233.3 (when used with respect to authorizing the use of U.S. Postal mail covers, ''protection of national security'' means to protect the United States from actual or potential threats to its security by a foreign power or its agents, including an attack or other grave, hostile act; sabotage, or international terrorism; or clandestine intelligence activities, including commercial espionage).

DHS considered employing the most common definition of the expression—pertaining to the national defense or foreign relations of the United States—but, with the exception of possible isolated applications to the Coast Guard, found this definition imprecise and an awkward fit for DHS functions that acquire textiles because, in many instances, those DHS components are not designated by law as national defense or foreign relations agencies. DHS considered covering all items acquired by DHS as ''directly related to the national security interests of the United States,'' but ultimately rejected that approach because to do so would render the statutory words ''directly related to national security interests of the United States'' superfluous (*i.e.,* omission of the qualifying phrase by lawmakers would have achieved the same result). DHS also notes that lawmakers are not reluctant to employ the expression ''homeland security'' to define the reach of a statute, and chose not do so in this instance. *See, e.g.,* 6 U.S.C. 468 (''homeland security missions'' of the Coast Guard defined), 6 U.S.C. 482 (''homeland security information'' defined). Moreover, applying the expression to the entirety of textile items purchased by DHS, irrespective of function or use, would include any number of activities that, while worthwhile, would render the expression ''national security interests'' patently overbroad, equating it with any activity that contributes to the strength of the Nation by promoting the general welfare. *See Cole* v. *Young,* 351 U.S. 536, 544 (1956). In addition, the previously mentioned congressional floor remarks discussed the statute as principally pertaining to border and transportation security, with a potential for later expansion.

DHS thus defines items ''directly related to national security interests'' at 48 CFR 3025.7001(e) as items ''intended for use in a Department of Homeland Security action protecting the nation from internal or external threats.'' This definition includes the following elements:

- ''Intended for use''—if an item is not acquired with the intention of being used in a manner related to national security interests, it is not covered, regardless of its eventual actual use;
- ''Use in a DHS action''— if an item will not be used in a protective action performed by DHS, it is not covered (for example, drapes for a DHS action office would likely not qualify, but textile body armor likely would qualify);
- ''Protecting the nation from internal or external threats''—the intended DHS action must be a protective action (for example, patrolling the border is a protective action; parading for dignitaries is not).

So defined, the interim regulatory provisions capture only the relevant aspects of the Recovery Act ''national security interests'' requirement, and in a manner consonant with the known legislative intent and DHS functions. The expression captures items, among other items, used in actions by DHS components with border, transportation, and maritime security functions, and any other DHS component, where ready access by hostile foreign State, organized non-State, or criminal actors to the items, their manufacturing method, or supply chain, would pose a significant risk of circumvention or cooption of a DHS protective action.

Other provisions of the interim regulations reflect the Recovery Act's coverage of some textile items regardless of whether they are a commercial or a noncommercial item and other textile items only if they are noncommercial items. Interim 3025.7002–1(a)(1)–(2), consistent with sections 604(b) and (f), cover the following textile items regardless of whether they are commercial or noncommercial:

- *3025.7002–1(a)(1)*—clothing and the materials and components thereof, other than sensors, electronics, or other items added to, and not normally associated with, clothing (and the materials and components thereof); or
- *3025.7002–1(a)(2)*—tents, tarpaulins, covers, textile belts, bags, protective equipment (including but not limited to body armor), sleep systems, load carrying equipment (including but not limited to fieldpacks), textile marine equipment, parachutes, or bandages.

Interim 3025.7002–1(b), consistent with Recovery Act sections 604(b) and (f), only covers noncommercial textile items as follows:

- *3025.7002–1(b)*—cotton and other natural fiber products, woven silk or woven silk blends, spun silk yarn for cartridge cloth, synthetic fabric or coated synthetic fabric (including all textile fibers and yarns that are for use in such fabrics), canvas products, or wool (whether in the form of fiber or yarn or contained in fabrics, materials, or manufactured articles); or any item of individual equipment manufactured

from or containing such fibers, yarns, fabrics, or materials.

The interim regulations at 3025.7002–2 also reflect the circumstances wherein the Recovery Act excludes textile items from coverage or exempts covered items from the acquisition limitations; including,

- Acquisitions at or below the simplified acquisition threshold (currently $100,000), as expressed and defined in the Federal Acquisition Regulation (FAR).
- Acquisition of items not directly related to national security interests of the United States, as discussed above.
- Acquisitions of any of the items otherwise covered by (HSAR) 48 CFR 3025.7002–1, if the Chief Procurement Officer determines, based on procedures described in the interim regulation, that the item grown, reprocessed, reused, or produced in the United States cannot be acquired as and when needed in a satisfactory quality and sufficient quantity at United States market prices.
- Acquisitions of items listed as ''nonavailable articles'' in (FAR) 48 CFR 25.104, as provided in the ''availability exception'' at Recovery Act section 604(c).
- Emergency acquisitions by activities located outside the United States, as stated in the Recovery Act.
- Acquisitions by vessels in foreign waters, as stated in the Recovery Act.
- Acquisitions of incidental amounts of cotton, other natural fibers, wool or other item covered by (HSAR) 48 CFR 3025.7002–1(a)-(b) incorporated in an end product. This is an amount for which the estimated value of the covered item is not more than 10 percent of the total price of the end product, as stated in the Recovery Act.
- As discussed more fully below, acquisitions of textile items otherwise covered by (HSAR) 48 CFR 3025.7002–1(a)-(b) for which restricting a procurement of the items to those that have been grown, reprocessed, reused, or produced in the United States would be inconsistent with United States obligations under international agreements.

Applicability of International Agreements

The Recovery Act at section 604(k) requires that DHS implement the section ''consistent with United States obligations under international agreements.'' This means that to the extent that DHS and its components are subject to the various United States bilateral and plurilateral free trade agreements (FTAs) and the WTO Government Procurement Agreement (GPA), DHS textile acquisitions must be consistent with those obligations.

The list of United States trade agreements relevant for procurement appear in the FAR at 48 CFR 25.400 (a)(1) and (2). The FAR at 48 CFR 25.003 lists the signatories to the various free trade agreements in the definition of ''Free Trade Agreement country'' and lists the signatories to the GPA in the definition of ''World Trade Organization Government Procurement Agreement (WTO GPA) country.'' Items from a Free Trade Agreement country or a WTO GPA country are ''eligible products.''

The United States has no obligations with respect to DHS procurements under the U.S.-Oman Free Trade Agreement. Procurements by the Transportation Security Administration (TSA) are excluded from all United States obligations, except with respect to the North American Free Trade Agreement (NAFTA) and the U.S.-Chile Free Trade Agreement. Accordingly, for all DHS components, except TSA as noted above, the interim requirements of new (HSAR) 48 CFR 3025.225 would be inapplicable to items that are eligible products under (FAR) 49 CFR Subpart 25.4. This means that TSA, except with regard to products from Canada, Chile or Mexico, would not use (FAR) 48 CFR Subpart 25.4 in its procurements to exempt an item from a designated country from the requirements of the Act, but all other DHS components would do so.

The interim regulations provide that covered DHS components must apply (FAR) 48 CFR Subpart 25.4 to exempt eligible products from qualified countries if the procurement exceeds the GPA threshold or the relevant FTA threshold, noting that the Recovery Act foreign textiles acquisition limitation does not apply to procurements below the simplified acquisition threshold ($100,000). To the extent a procurement is for an eligible product from a country with a trade agreement threshold beneath the SAT (*e.g.,* $67,826), the trade agreement and (FAR) 48 CFR Subpart 25.4 would apply to all procurements over the trade agreement threshold, and the requirements of HSAR 3025.70 would not apply.

The Recovery Act foreign textiles acquisition limitation applies to covered items from countries that are not GPA or FTA countries regardless of which DHS component makes the acquisition. The interim HSAR subpart applies for all DHS components if the country of origin for an item is not a WTO GPA country or a Free Trade Agreement country (*see* (FAR) 48 CFR 25.003 definitions). Under the interim regulations, DHS components cannot procure a covered textile item from a non-designated country unless one of the other Recovery Act exceptions applies to the acquisition. Even if such exception applies, however, the acquisition may still be covered by the Buy American Act.

IV. Regulatory Requirements

A. Small Entity Analysis

Under the Regulatory Flexibility Act (5 U.S.C. 601–612), we have considered whether this interim rule would have a significant economic impact on a substantial number of small entities. The term ''small entities'' comprises small businesses, not-for-profit organizations that are independently owned and operated and are not dominant in their fields, and governmental jurisdictions with populations of less than 50,000.

The Federal Procurement Data System (FPDS) shows that during FY 2008, DHS awarded 1,283 contract actions for textile products totaling $74,132,846. Of the 322 businesses that received these awards, 249 (77%) were small businesses and 73 were identified as being ''other than small business.'' The total number of awards for products that originated in the United States was approximately 97% of the total number of awards. The total number of awards to small businesses for products that originated in the United States was approximately 98% (958 awards) of the total number of awards to small entities for textile products (981). FPDS data show only 23 awards were made to small businesses for textiles originating outside of the United States. Even if all of those awards for products that originated outside the United States would have been awarded to a small business that did not provide products originating in the United States, it would impact a very small proportion of awards to small businesses (2.3%). Also, based on this FPDS data, we estimate that these 23 awards were made to 12 unique small businesses. FPDS further informs us that the majority of these 23 awards made to 12 unique small businesses were made because of ''domestic nonavailability.'' As items determined to be unavailable in the United States are excluded from the scope of this rule, we estimate that fewer than 5 small businesses would have an award (or awards) impacted by this rule. Accordingly, the number and proportion of small entities potentially impacted by this rule are small and the amount of impact is not significant.

Based on this analysis, DHS does not believe this interim rule will have a significant economic impact on a

substantial number of small entities and that, other than the alternative interpretations discussed above related to national security interests, there are no additional significant alternatives to the interim rule that would minimize the impact of the interim rule on small entities. There are also no relevant Federal rules that duplicate, overlap, or conflict with the interim rule. DHS will, however, consider comments from small entities concerning the affected HSAR parts 3015, 3016, 3025, and 3052. Interested parties should submit such comments separately and should cite 5 U.S.C. 601, *et seq.* (HSAR Case 2007–004) in the comments.

B. Executive Order 12866 (Regulatory Planning and Review)

This interim rule is a significant regulatory action under section 3(f) of Executive Order 12866 and the Office of Management and Budget has reviewed it under that Order. An assessment of potential costs and benefits under section 6(a)(3) of that Order is included within the Small Entity Analysis, Section A., above.

C. Assistance for Small Entities

Under section 213(a) of the Small Business Regulatory Enforcement Fairness Act of 1996 (Pub. L. 104–121), we want to assist small entities in understanding the interim rule so that they can better evaluate its effects on them and participate in the rulemaking. Small businesses may send comments on the actions of Federal employees who enforce, or otherwise determine compliance with, Federal regulations to the Small Business and Agriculture Regulatory Enforcement Ombudsman and the Regional Small Business Regulatory Fairness Boards. The Ombudsman evaluates these actions annually and rates each agency's responsiveness to small business. If you wish to comment on actions by DHS employees, call 1–888–REG–FAIR (1–888–734–3247). The DHS will not retaliate against small entities that question or complain about this interim rule or any DHS policy.

D. Collection of Information

The Paperwork Reduction Act (Pub. L. 104–13) does not apply because the interim rule contains no information collection requirements. Accordingly, the Department will not submit a change request for any burdens concerning this interim rule to the Office of Management and Budget under 44 U.S.C. 3501, *et seq.*

E. Determination To Issue an Interim Rule

A determination has been made under the authority of the DHS Chief Procurement Officer that urgent and compelling reasons exist to promulgate this interim rule without prior opportunity for public comment. *See* 41 U.S.C. 418b(d); Department of Homeland Security Delegation No. 0700 (II.)(b). This action is necessary because the American Recovery and Reinvestment Act of 2009 became effective on enactment on February 17, 2009, and the DHS foreign textile acquisition limitations become applicable to contracts entered into after August 16, 2009. Timely compliance with the Act is not possible if a final rule is promulgated after a thirty-day public comment period. Moreover, without effective HSAR provisions in place by August 16, 2009, there is an increased risk of inconsistent application of the Recovery Act section 604 requirements and a potential lack of public understanding and transparency as to the processes and procedures for complying with the statute. Pursuant to Public Law 98–577 and FAR 1.501, however, the Department will consider public comments received in response to this interim rule in the formation of the final rule.

List of Subjects in 48 CFR Parts 3025 and 3052

Government procurement.

Richard Gunderson,

Acting Chief Procurement Officer, Department of Homeland Security.

■ Accordingly, DHS amends (HSAR) 48 CFR chapter 30 as follows:

CHAPTER 30—DEPARTMENT OF HOMELAND SECURITY

■ 1. Add part 3025 to read as follows:

PART 3025—FOREIGN ACQUISITION

Subpart 3025.70—American Recovery and Reinvestment Act Restrictions on Foreign Acquisition

Sec.

3025.7000 Scope of subpart.
3025.7001 Definitions.
3025.7002 Restrictions on clothing, fabrics, and related items.
3025.7002–1 Restrictions.
3025.7002–2 Exceptions.
3025.7002–3 Specific application of trade agreements.
3025.7003 Contract clauses.

Authority: 41 U.S.C. 418b(a) and (b).

3025.7000 Scope of subpart.

This subpart contains restrictions on the acquisition of certain foreign textile products imposed by the American Recovery and Reinvestment Act of 2009 on contracts, exercising of an option and orders entered into on or after August 16, 2009 with funds appropriated or otherwise provided on or before February 17, 2009.

3025.7001 Definitions.

As used in this subpart—

(a) ''Commercial,'' as applied to an item described in (HSAR) 48 CFR 3025.7002–1, means an item of supply, whether an end product or component, that meets the definition of ''commercial item'' set forth in (FAR) 48 CFR 2.101.

(b) ''Component'' means any item supplied to the Government as part of an end product or of another component.

(c) ''End product'' means supplies delivered under a line item of a contract.

(d) ''Non-commercial,'' as applied to an item described in (HSAR) 48 CFR 3025.7002–1, means an item of supply, whether an end product or component, that does not meet the definition of ''commercial item'' set forth in (FAR) 48 CFR 2.101.

(e) ''Item directly related to national security interests'' means an item intended for use in a Department of Homeland Security action protecting the nation from internal or external threats, including protecting the nation's borders, transportation system, maritime domain or critical infrastructure, as determined by the contracting officer.

3025.7002 Restrictions on clothing, fabrics, and related items.

3025.7002–1 Restrictions.

The following restrictions implement section 604 of the American Recovery and Reinvestment Act of 2009 and they apply to all types of actions, orders, exercising of an option and contracts. Except as provided in subsection (HSAR) 48 CFR 3025.7002–2, do not acquire, either as end products or components, any item listed in paragraphs (a) or (b) of this section, if the item is directly related to the national security interests of the United States and the item has not been grown, reprocessed, reused, or produced in the United States:

(a) Commercial or non-commercial items—(1) Clothing and the materials and components thereof, other than sensors, electronics, or other items added to, and not normally associated with, clothing (and the materials and components thereof); or (2) Tents, tarpaulins, covers, textile belts, bags, protective equipment (such as body armor), sleep systems (sleeping bags), load carrying equipment (such as

fieldpacks), textile marine equipment, parachutes or bandages.

(b) Non-commercial items—

(1) Cotton and other natural fiber products.

(2) Woven silk or woven silk blends.

(3) Spun silk yarn for cartridge cloth.

(4) Synthetic fabric or coated synthetic fabric (including all textile fibers and yarns that are for use in such fabrics).

(5) Canvas products.

(6) Wool (whether in the form of fiber or yarn or contained in fabrics, materials, or manufactured articles).

(7) Any item of individual equipment manufactured from or containing any of the fibers, yarns, fabrics, or materials listed in this paragraph (b).

3025.7002–2 Exceptions.

Acquisitions in the following categories are not subject to the restrictions in (HSAR) 48 CFR 3025.7002–1:

(a) Acquisitions at or below the simplified acquisition threshold.

(b) Acquisition of items not directly related to national security interests of the United States.

(c) Acquisitions of any of the items otherwise covered by (HSAR) 48 CFR 3025.7002–1, if the Chief Procurement Officer determines that the item grown, reprocessed, reused, or produced in the United States cannot be acquired as and when needed in a satisfactory quality and sufficient quantity at United States market prices. When this exception is used—

(1) Only the DHS Chief Procurement Officer is authorized to make the domestic nonavailability determination.

(2) The DHS Component, not later than 7 days after the award of the contract, must post a notification that the exception has been applied on the Government-wide point of entry, which may be combined with any synopsis of award.

(3) The supporting documentation for the CPO determination prepared by the DHS Component(s) shall include—

(i) An analysis of alternatives that would not require a domestic nonavailability determination; and

(ii) A written justification by the requiring activity, with specificity, why such alternatives are unacceptable.

(d) Acquisitions of items listed in FAR 48 CFR 25.104.

(e) Emergency acquisitions by activities located outside the United States.

(f) Acquisitions by vessels in foreign waters.

(g) Acquisitions of incidental amounts of cotton, other natural fibers, wool or other item covered by (HSAR) 48 CFR 3025.7002–1(a)-(b) incorporated in an end product, for which the estimated value of the item so covered is not more than 10 percent of the total price of the end product.

(h) Acquisitions of items otherwise covered by (HSAR) 48 CFR 3025.7002–1(a) and (b) for which restricting a procurement of the items to those that have been grown, reprocessed, reused, or produced in the United States would be inconsistent with United States obligations under international agreements. Acquisitions of products that are eligible products per (FAR) 48 CFR Subpart 25.4 are not covered by these restrictions; see (HSAR) 48 CFR 3025.7003–2 for specific application of trade agreements.

3025.7002–3 Specific application of trade agreements.

(a) For covered items entitled to non-discriminatory treatment under the World Trade Organization Agreement on Government Procurement (WTO GPA), or any Free Trade Agreement (FTA) listed in (FAR) 48 CFR Subpart 25.4, this subpart is applied as follows—

(1) For solicitations, orders, exercising of an option and contracts issued by any component other than Transportation Security Administration (TSA), in which any covered items will be procured with a value that is both above the simplified acquisition threshold, and below the applicable trade agreement threshold in (FAR) 48 CFR 25.402, apply (HSAR) 48 CFR 3025.7002–1. Section 3025.7002–2(h) will exclude eligible products of designated countries with FTA thresholds beneath the simplified acquisition threshold from coverage of section 604.

(2) For solicitations, orders, exercising of an option and contracts issued by any component other than Transportation Security Administration (TSA), in which any covered items will be procured with a value exceeding $194,000 (or the superseding threshold upon updating of (FAR) 48 CFR 25.402), (HSAR) 48 CFR 3025.7002–1 does not apply if the items are eligible products per FAR 48 CFR Subpart 25.4; follow (FAR) 48 CFR part 25 instead.

(3) For solicitations, orders, exercising of an option and contracts issued by TSA in which any covered items will be procured with a value exceeding the simplified acquisition threshold, (HSAR) 48 CFR 3025.7002 applies to all covered items except those from Mexico, Canada or Chile because TSA is listed as a covered governmental entity in the North American Free Trade Agreement (NAFTA) and the U.S.-Chile Free Trade Agreement but TSA is excluded from all other trade agreements.

(b) For covered items from a country that is not entitled to non-discriminatory treatment under the WTO GPA, or any FTA listed in (FAR) 48 CFR subpart 25.4, apply the restrictions of (HSAR) 48 CFR 3025.7002 to all solicitations, orders, exercising of an option and contracts exceeding the simplified acquisition threshold in place of the Buy America Act policies at (FAR) 48 CFR Subpart 25.1.

3025.7003 Contract clauses.

Unless an exception under (HSAR) 48 CFR 3025.7002–2(a), (b), (e) or (f) applies, insert the clause at (HSAR) 48 CFR 3052.225–70, Requirement for Use of Certain Domestic Commodities, in solicitations, exercising of an option, contract modifications that add new items (or which make a cardinal change) and contracts with a value exceeding the simplified acquisition threshold when procuring any item covered under (HSAR) 48 CFR 3025.7002–1(a) or (b).

PART 3052—SOLICITATION PROVISIONS AND CONTRACT CLAUSES

■ 2. The authority citation for part 3052 continues to read as follows:

Authority: 41 U.S.C. 418b(a) and (b).

■ 3. Add section 3052.225–70 to read as follows:

3052.225–70 Requirement for Use of Certain Domestic Commodities.

As prescribed in (HSAR) 48 CFR 3025.7003, use the following clause:

Requirement for Use of Certain Domestic Commodities (AUG 2009)

(a) *Definitions.* As used in this clause—

(1) ''Commercial,'' as applied to an item described in subsection (b) of this clause, means an item of supply, whether an end product or component, that meets the definition of ''commercial item'' set forth in (FAR) 48 CFR 2.101.

(2) ''Component'' means any item supplied to the Government as part of an end product or of another component.

(3) ''End product'' means supplies delivered under a line item of this contract.

(4) ''Non-commercial,'' as applied to an item described in subsections (b) or (c) of this clause, means an item of supply, whether an end product or component, that does not meet the definition of ''commercial item'' set forth in (FAR) 48 CFR 2.101.

(5) ''Qualifying country'' means a country with a memorandum of understanding or international agreement with the United States under which DHS procurement is covered.

(6) ''United States'' includes the possessions of the United States.

(b) The Contractor shall deliver under this contract only such of the following commercial or non-commercial items, either as end products or components, that have been grown, reprocessed, reused, or produced in the United States:

(1) Clothing and the materials and components thereof, other than sensors, electronics, or other items added to, and not normally associated with, clothing and the materials and components thereof; or

(2) Tents, tarpaulins, covers, textile belts, bags, protective equipment (such as body armor), sleep systems, load carrying equipment (such as fieldpacks), textile marine equipment, parachutes or bandages.

(c) The Contractor shall deliver under this contract only such of the following non-commercial items, either as end products or components, that have been grown, reprocessed, reused, or produced in the United States:

(1) Cotton and other natural fiber products.

(2) Woven silk or woven silk blends.

(3) Spun silk yarn for cartridge cloth.

(4) Synthetic fabric or coated synthetic fabric (including all textile fibers and yarns that are for use in such fabrics).

(5) Canvas products.

(6) Wool (whether in the form of fiber or yarn or contained in fabrics, materials, or manufactured articles).

(7) Any item of individual equipment manufactured from or containing any of the fibers, yarns, fabrics, or materials listed in this paragraph (c).

(d) This clause does not apply—

(1) To items listed in (FAR) 48 CFR 25.104, or other items for which the Government has determined that a satisfactory quality and sufficient quantity cannot be acquired as and when needed at United States market prices;

(2) To incidental amounts of cotton, other natural fibers, or wool incorporated in an end product, for which the estimated value of the cotton, other natural fibers, or wool is not more than 10 percent of the total price of the end product; or

(3) To items that are eligible products per (FAR) 48 CFR Subpart 25.4.

(End of clause.)

[FR Doc. E9–19647 Filed 8–13–09; 8:45 am]

BILLING CODE 9110–9B–P

DEPARTMENT OF THE INTERIOR

Fish and Wildlife Service

50 CFR Parts 25 and 32

[Docket No. FWS–R3–NSR–2009–0007]
[32579–1261–0000–4A]

RIN 1018–AW48

2009–2010 Hunting and Sport Fishing Regulations for the Upper Mississippi River National Wildlife and Fish Refuge

AGENCY: Fish and Wildlife Service, Interior.

ACTION: Final rule.

SUMMARY: The U.S. Fish and Wildlife Service (Service or we) amends the regulations for the Upper Mississippi River National Wildlife and Fish Refuge (refuge) that pertain to existing programs for migratory game bird hunting, upland game hunting, and big game hunting. These changes take effect with the 2009–2010 season, implement portions of the Comprehensive Conservation Plan for the refuge approved in 2006, and amend other regulations. We also make amendments to reflect recent OMB approval of new hunting and fishing application forms and activity reports for national wildlife refuges.

DATES: This rule is effective August 17, 2009.

FOR FURTHER INFORMATION CONTACT: Rick Frietsche, (507) 452–4232; Fax (507) 452–0851.

SUPPLEMENTARY INFORMATION:

Background

The National Wildlife Refuge System Administration Act of 1966, as amended by the National Wildlife Refuge Improvement Act of 1997 (16 U.S.C. 668dd–668ee), authorizes the Secretary of the Interior (Secretary) to allow uses of refuge areas, including hunting and/or sport fishing, upon a determination that such uses are compatible with the purposes of the refuge and National Wildlife Refuge System (Refuge System) mission. The action also must be in accordance with provisions of all laws applicable to the areas, developed in coordination with the appropriate State fish and wildlife agency(ies), and consistent with the principles of sound fish and wildlife management and administration. These requirements ensure that we maintain the biological integrity, diversity, and environmental health of the Refuge System for the benefit of present and future generations of Americans.

The law requires the Secretary to prepare a Comprehensive Conservation Plan (CCP) for each refuge and to manage each refuge in a manner consistent with the CCP. Each CCP is guided by the overarching requirement that refuges are to be managed to fulfill the purposes for which they were established and the mission of the Refuge System. In addition, we must administer the Refuge System to provide for the conservation of fish, wildlife and plant resources and their habitat and to ensure their biological integrity, diversity, and environmental health. Each CCP must identify and describe the refuge's purposes; fish, wildlife, and plant populations; cultural resources; areas for administrative or visitor facilities; significant problems affecting resources and actions necessary; and opportunities for compatible wildlife-dependent recreation. Each CCP must also be developed through consultation with the States, other Federal agencies, and the public, and be coordinated with applicable State conservation plans.

Upper Mississippi River National Wildlife and Fish Refuge

The Upper Mississippi River National Wildlife and Fish Refuge (refuge) encompasses 240,000 acres in a more-or-less continuous stretch of 261 miles of Mississippi River floodplain in Minnesota, Wisconsin, Iowa, and Illinois. Congress established the refuge in 1924 to provide a refuge and breeding ground for migratory birds, fish, other wildlife, and plants. The refuge is perhaps the most important corridor of habitat in the central United States due to its species diversity and abundance and is the most visited refuge in the United States with 3.7 million annual visitors. Approximately 187,000 acres of the refuge is open to all hunting, and approximately 140,000 acres of surface water is open to year-round fishing.

On July 11, 2006, we published a notice of availability of our Final Environmental Impact Statement (EIS) and CCP for the refuge (71 FR 39125), and we accepted public comments on the Final EIS for 30 days. On August 24, 2006, the Regional Director of the Midwest Region of the Fish and Wildlife Service signed the Record of Decision that documented the selection of Alternative E, the Preferred Alternative presented in the Final EIS. We published a notice of availability of that Record of Decision on November 2, 2006 (71 FR 64553). In accordance with the Record of Decision, we prepared a CCP based on Alternative E. The CCP was approved on October 24, 2006. The Final EIS and CCP are available at *http://www.fws.gov/midwest/planning/uppermiss/*.

We developed the CCP for the refuge in accordance with all requirements including the consultation and public involvement provisions of the National Wildlife Refuge System Improvement Act. These include new compatibility determinations for hunting and fishing, which are referenced and listed in Appendix E of the Final EIS (which includes recreational and commercial fishing, migratory bird and big game hunting, wildlife observation and photography). We completed hunting and fishing regulations in 2007 to implement the goals, objectives, and strategies described in the CCP pertaining to hunting and fishing and related uses. We published a proposed rule in the **Federal Register** on June 28, 2007 (72 FR 35380), and a final rule was

effective on September 7, 2007 (72 FR 51534).

We based these compatibility determinations on all changes anticipated in the CCP, including the changes described in this rule, and they remain valid as approved in 2006. We then developed this rule to complete implementation of the hunting- and fishing-related portions of the CCP. Even after we enact the changes, opportunities for waterfowl hunting on the 240,000-acre refuge will remain abundant with 49,239 acres closed to waterfowl or other hunting compared to a pre-CCP total of 48,099 acres.

Proposed Rule

On April 28, 2009, we published a proposed rule (74 FR 19318) to make four changes to the existing refuge regulations (see our final rule of September 7, 2007 (72 FR 51534), for more details on closure restrictions). We proposed to modify the refuge's Waterfowl Hunting Closed Areas and/or No Hunting Zones in Pool 4; add a new No Hunting Zone in Pool 5A as scheduled in the CCP; make permanent an interim No Hunting or Trapping Zone on the recently acquired Mathy Tract (75 acres) on Brice Prairie near Pool 7, which would be used as a future office and visitor contact facility; and add a regulation on the immediate retrieval of waterfowl taken during hunting that would be applicable refuge-wide.

We made no substantive changes in this final rule. However, we are making a minor edit to correct an administrative error. In the Statutory Authority section we are correcting the date in the reference to the National Wildlife Refuge System Improvement Act of 1977 to 1997. In addition, on January 15, 2009, OMB approved the use of nine new hunting and fishing application forms and activity reports for use on national wildlife refuges (control #1018–0140). Therefore, we are also amending 50 CFR 25.23 to reflect the addition of these forms to those already used on national wildlife refuges.

The retrieval regulation resulted from discussions we had with State law enforcement personnel and was endorsed by 33 of 35 participants at a public waterfowl hunting workshop in February 2007. This regulation is designed to reduce the loss of downed waterfowl by adding a time element (i.e., ''immediately'') to existing State retrieval regulations and to reduce the crippling loss of waterfowl by discouraging hunters from shooting at birds that are beyond effective shotgun range. The change in Pool 5A is the addition of a 24-acre Fountain City Bay No Hunting Zone encompassing a backwater bay adjacent to Merrick State Park, Wisconsin. This new zone, identified in the CCP, is designed to reduce conflicts with park users and will also provide a resting and feeding area for migrating puddle ducks such as mallards and blue-winged teal.

The most significant of the changes above is the modification of the Waterfowl Hunting Closed Areas in Pool 4 of the refuge, a change described and scheduled for the 2009–2010 season in the CCP. This pool currently has 6,884 acres designated as closed areas, and under this rule the acreage will drop to 3,500 acres designated as closed areas or no hunting zones. The entire Nelson–Trevino closed area will be open to hunting (3,773 acres), and a new closed area will be established that encompasses Big Lake (2,210 acres). The current Peterson Lake closed area of 3,111 acres will be reduced to 1,290 acres and also divided into more recognizable subunits, namely Peterson Lake closed area (572 acres), Rieck's Lake closed area (499 acres), and Buffalo River no hunting zone (219 acres). These changes, although resulting in more acreage open to hunting in Pool 4, are predicted to dramatically improve the effectiveness of Pool 4 in providing waterfowl secure resting and feeding areas based on an analysis of aquatic foods and bird use patterns completed for the Final EIS and CCP. An effective system of strategically located waterfowl closed areas on the 261-mile-long refuge is critical to waterfowl using the Mississippi Flyway, and allows hunting to remain compatible. We will monitor the effectiveness of the modification to Pool 4 and will make future changes if warranted by waterfowl use surveys.

Finally, we make corrections to some acreage figures for the ''No Entry—Sanctuary,'' ''Area Closed,'' ''Area Closed—No Motors,'' ''No Hunting Zone'' and ''No Hunting or Trapping Zone'' listings in the respective sections of this rule to reflect increased accuracy based on actual signing and mapping in the field and subsequent Geographic Information System analysis since we published the 2007–08 Hunting and Fishing final rule. These are considered administrative changes since the corrections match the areas shown on maps provided to the public since 2007. We have summarized these administrative changes below:

No Entry—Sanctuary Areas

Pool Slough, Pool 9, Minnesota/Iowa, from 1,112 to 1,126 acres

Spring Lake, Pool 13, Illinois, from 3,686 to 3,697 acres

Areas Closed and Areas Closed—No Motors

Big Lake, Pool 4, Wisconsin, from 2,626 to 2,210 acres

Peterson Lake, Pool 4, Wisconsin, from 672 to 572 acres

Spring Lake, Pool 5, Wisconsin, from 243 to 254 acres

Polander Lake, Pool 5A, Minnesota/Wisconsin, from 1,907 to 1,873 acres

Lake Onalaska, Pool 7, Wisconsin, from 7,369 acres to 7,366 acres

Wisconsin Islands, Pool 8, Minnesota/Wisconsin, from 6,510 to 6,538 acres

Wisconsin River Delta, Pool 10, Wisconsin, from 1,406 to 1,414 acres

12-Mile Island, Pool 11, Iowa, from 1,145 to 1,139 acres

Kehough Slough, Pool 12, Illinois, from 343 to 333 acres

Pleasant Creek, Pool 13, Iowa, from 2,067 to 2,191 acres

Elk River, Pool 13, Iowa, from 1,237 to 1,248 acres

Beaver Island, Pool 14, Iowa, from 717 to 864 acres

No Hunting or No Hunting or Trapping Zones

Upper Halfway Creek Marsh, Pool 7, Wisconsin, from 141 to 143 acres

Goose Island, Pool 8, Wisconsin, from 986 to 984 acres

Goetz Island Trail, Pool 11, Iowa, from 32 to 31 acres

Crooked Slough Backwater, Pool 13, Illinois, from 2,467 to 2,453 acres

Crooked Slough Proper, Pool 13, Illinois, from 192 to 270 acres

Response to Public Comment

In the April 28, 2009, proposed rule (74 FR 19318), we invited public comments on the proposed amendments to the refuge-specific regulations for the refuge. We reviewed and considered all comments received by May 28, 2009, the end of the 30–day comment period. We received four comments on the proposed rule. Since comments were often similar or commenters covered multiple topics, we have treated the comments/responses by major issue area.

Comment 1: Two commenters expressed their disapproval of hunting programs on refuges in general.

Response 1: We understand some citizens' concern with hunting on national wildlife refuges. However, hunting on refuges remains an important form of outdoor recreation for millions of citizens and a use which we are to facilitate when compatible with the purpose of the refuge and the mission of the Refuge System per the National Wildlife Refuge System Administrative Act (Refuge

Administration Act). We have taken care to ensure the right balance between the needs of wildlife and people on the refuge in keeping with the Refuge Administration Act and Service policy and regulation. We have also determined in a compatibility determination that hunting, with stipulations such as a system of hunting closed areas included in this and previous rules, is a compatible use on the refuge. We made no change to the rule as a result of these comments.

Comment 2: A commenter suggested that we include a clause requiring the use of steel shot in shotshells for hunting on the refuge.

Response 2: This rule amends existing regulations for hunting on the refuge. The full regulations not cited in this amendment require the use of steel or other nontoxic shot. The actual regulations in 50 CFR 32.42, Section A.8 (migratory bird hunting) and Section B.7 (upland game hunting) read: ''You may possess only approved nontoxic shot shells while in the field'' and ''You may only use or possess approved nontoxic shot shells while in the field, including shot shells used for hunting wild turkey.'' We made no change to the rule as a result of this comment.

Comment 3: One commenter was opposed to the hunting program changes in Pool 4 of the refuge citing loss of a traditional waterfowl hunting area, lack of reason for the change, and saying there were plenty of other closed areas available for waterfowl.

Response 3: We understand that changes to the system of Waterfowl Hunting Closed Areas of the refuge reflected in this rule are generally met with resistance since some of the changes affect long-standing patterns of use by waterfowl hunters and others. However, we thoroughly documented the issue, the science, and the need for change in the Draft and Final EIS. We added Appendix Q in the Final EIS, which gives details on each closed area and rationale for changes based on public questions and concerns. The system of Waterfowl Hunting Closed Areas has remained virtually unchanged since 1958, and we believe we need the adjustments reflected in the CCP and in this rule based on current habitat conditions, waterfowl population and use data, human disturbance studies, and energetics modeling. These changes also allow waterfowl hunting and other uses to remain compatible. We made no change to the rule based on these comments.

Available Information for Specific Districts of the Refuge

The refuge is divided into four districts for management, administrative, and public service effectiveness and efficiency. These districts correspond to two or more Mississippi River pools created by the series of locks and dams on the river. District offices are located in Winona, Minnesota (Pools 4–6), La Crosse, Wisconsin (Pools 7–8), McGregor, Iowa (Pools 9–11), and Savanna, Illinois (Pools 12–14). If you are interested in specific information pertaining to a specific area encompassed in this rule, you may contact the appropriate district office listed below:

Winona District, U.S. Fish and Wildlife Service, 51 East Fourth Street, Room 203, Winona, MN 55987; Telephone (507) 454–7351.

La Crosse District, U.S. Fish and Wildlife Service, 555 Lester Avenue, Onalaska, WI 54650; Telephone (608) 783–8405.

McGregor District, U.S. Fish and Wildlife Service, P.O. Box 460, McGregor, IA 52157; Telephone (563) 873–3423.

Savanna District, U.S. Fish and Wildlife Service, 7071 Riverview Road, Thomson, IL 61285; Telephone (815) 273–2732.

Fish Advisory

For health reasons, anglers should review and follow State-issued consumption advisories before enjoying recreational sport fishing opportunities on Service-managed waters. You can find information about current fish consumption advisories on the internet at: *http://www.epa.gov/waterscience/fish/*.

Plain Language Mandate

In this rule, we comply with a Presidential mandate to use plain language in regulations. As examples, we use ''you'' to refer to the reader and ''we'' to refer to the Service, the word ''allow'' instead of ''permit'' when we do not require the use of a permit for an activity, and we use active voice whenever possible (i.e., ''We allow hunting of upland game on designated areas'' vs. ''Upland game hunting in designated areas is allowed'').

Effective Date

This rule is effective upon publication in the **Federal Register**. We have determined that any further delay in implementing these refuge-specific hunting and sport fishing regulations would not be in the public interest as a delay would disrupt goals, objectives, and strategies described in the CCP. All changes in the refuge's hunting program found in this rule were described in the CCP. A description of the comprehensive coordination of these regulations with the public through the development of the Environmental Impact Statement (EIS) and CCP is found in the ''Background'' section of this document. Implementing these regulations immediately will allow the Service to better manage refuge resources in time for the opening of the various seasons. These regulations also improve the conservation of resources and a delay would lessen the management effectiveness of this regulation- the requirement for a reasonable attempt at immediate retrieval of downed waterfowl reduces waste, while closing portions of pool 4 will provide additional secure waterfowl resting and feeding areas. This rule does not impact the public generally in terms of requiring lead time for compliance. These regulations implement management decisions made and published in the final CCP adopted October 24, 2006, giving refuge users and the affected public significant advance notice (see **SUPPLEMENTARY INFORMATION**). Therefore, we find good cause under 5 U.S.C. 553(d)(3) to make this rule effective upon publication.

Statutory Authority

The National Wildlife Refuge System Administration Act of 1966 (Administration Act), as amended by the National Wildlife Refuge System Improvement Act of 1997 (Improvement Act), (16 U.S.C. 668dd–668ee) and the Refuge Recreation Act of 1962 (16 U.S.C. 460k–460k-4) (Recreation Act) govern the administration and public use of refuges. In addition, the Migratory Bird Treaty Act (16 U.S.C 703–711) grants authority for management of migratory birds and the closing of any areas to migratory bird hunting.

The Migratory Bird Treaty Act (MBTA) designates the protection of migratory birds as a Federal responsibility. The MBTA enables the setting of seasons, and other regulations including the closing of areas, Federal and non-Federal, to the hunting of migratory birds. You can find regulations stemming from the MBTA pertaining to migratory bird hunting in 50 CFR part 20.

This document codifies in the Code of Federal Regulations amended hunting and sport fishing regulations that are applicable to the Upper Mississippi River National Wildlife and Fish Refuge. We are amending these regulations to implement the refuge CCP, better inform the general public of the regulations at

the refuge, increase understanding and compliance with these regulations, and make enforcement of these regulations more efficient. In addition to finding these regulations in 50 CFR part 32, visitors will find them reiterated in literature distributed by the refuge and posted on signs at major access points. Visitors will also find the boundaries of closed areas or other restricted-use areas referenced in this document marked by specific signs.

Regulatory Planning and Review

The Office of Management and Budget (OMB) has determined that this rule is not significant under Executive Order 12866 (E.O. 12866). OMB bases its determination on the following four criteria:

(a) Whether the rule will have an annual effect of $100 million or more on the economy or adversely affect an economic sector, productivity, jobs, the environment, or other units of the government.

(b) Whether the rule will create inconsistencies with other Federal agencies' actions.

(c) Whether the rule will materially affect entitlements, grants, use fees, loan programs, or the rights and obligations of their recipients.

(d) Whether the rule raises novel legal or policy issues.

Regulatory Flexibility Act

Under the Regulatory Flexibility Act (as amended by the Small Business Regulatory Enforcement Fairness Act [SBREFA] of 1996) (5 U.S.C. 601, *et seq.*), whenever a Federal agency is required to publish a notice of rulemaking for any proposed or final rule, it must prepare and make available for public comment a regulatory flexibility analysis that describes the effect of the rule on small entities (i.e., small businesses, small organizations, and small government jurisdictions). However, no regulatory flexibility analysis is required if the head of an agency certifies that the rule would not have a significant economic impact on a substantial number of small entities. Thus, for a regulatory flexibility analysis to be required, impacts must exceed a threshold for ''significant impact'' and a threshold for a ''substantial number of small entities.'' See 5 U.S.C. 605(b). SBREFA amended the Regulatory Flexibility Act to require Federal agencies to provide a statement of the factual basis for certifying that a rule would not have a significant economic impact on a substantial number of small entities.

This rule does not increase the number of recreation types allowed on the refuge but amends hunting and fishing regulations on the refuge. As a result, opportunities for hunting and fishing recreation on the refuge will remain abundant and increase over time based on analysis done in the Final EIS and CCP for the refuge.

Many small businesses within the retail trade industry (such as hotels, gas stations, taxidermy shops, bait and tackle shops, etc.) may benefit from some increased refuge visitation. A large percentage of these retail trade establishments in the majority of affected counties qualify as small businesses (see table below).

We expect that the incremental recreational opportunities will be scattered, and so we do not expect that the rule will have a significant economic effect (benefit) on a substantial number of small entities in any given community or county. We expect recreationists to spend an additional $2 million annually in total in the refuges' local economies. As shown in the table below, this represents 0.02 percent of the total amount of retail expenditures in the 19-county area. For comparison purposes, the county with the smallest retail expenditure total, Buffalo County in Wisconsin, is shown. If the entire retail trade expenditures associated with the hunting and fishing regulations occurred in Buffalo County, this would amount to 3.4 percent increase in annual retail expenditures.

TABLE: COMPARATIVE EXPENDITURES FOR RETAIL TRADE ASSOCIATED WITH ADDITIONAL REFUGE VISITATION 2009–2010 HUNTING AND FISHING REGULATIONS

	Retail Trade in 2002	Change Due to 2009–2010 Hunting and Fishing Regulations (15–year span of CCP)	Change as Percent of Total Retail Trade	Total Number of Retail Establishments	Establishments with fewer than 10 Employees
19-County Area	$9.8 billion	$1,999,216	0.02%	24,878	17,957
Buffalo County, WI	$58.3 million	$1,999,216	3.4%	350	290

Small Business Regulatory Enforcement Fairness Act

This rule is not a major rule under 5 U.S.C. 804(2), the Small Business Regulatory Enforcement Fairness Act. We anticipate no significant employment or small business effects. This rule:

a. Would not have an annual effect on the economy of $100 million or more. By the end of the 15–year CCP lifespan, the additional fishing and hunting opportunities on the refuge would generate an additional $2 million in angler and hunter expenditures with an economic impact estimated at $2.5 million per year (2003 dollars). Consequently, the maximum benefit of this rule for businesses both small and large would not be sufficient to make this a major rule. The impact would be scattered across 19 counties and would most likely not be significant in any local area.

b. Would not cause a major increase in costs or prices for consumers; individual industries; Federal, State, or local government agencies; or geographic regions. We do not expect this rule to affect the supply or demand for fishing and hunting opportunities in the United States, and, therefore, it should not affect prices for fishing and hunting equipment and supplies, or the retailers that sell equipment.

c. Would not have significant adverse effects on competition, employment, investment, productivity, innovation, or the ability of U.S.-based enterprises to compete with foreign-based enterprises. This rule represents only a small proportion of recreational spending of a small number of affected hunters. Therefore, this rule would have virtually no economic effect on the wildlife-dependent industry, which has annual sales of equipment and travel expenditures of over $72 billion nationwide.

Unfunded Mandates Reform Act

Since this rule would apply to public use of federally owned and managed

refuges, it would not impose an unfunded mandate on State, local, or Tribal governments or the private sector of more than $100 million per year. The rule would not have a significant or unique effect on State, local, or Tribal governments or the private sector. A statement containing the information required by the Unfunded Mandates Reform Act (2 U.S.C. 1531 *et seq.*) is not required.

Takings (E.O. 12630)

In accordance with E.O. 12630, this rule would not have significant takings implications. This rule would affect only visitors to the refuge and describe what they can do while they are on the refuge.

Federalism (E.O. 13132)

As discussed in the Unfunded Mandates Reform Act section above, this rule would not have sufficient Federalism implications to warrant the preparation of a Federalism Assessment under E.O. 13132. In preparing the CCP for the refuge, we worked closely with the four States bordering the refuge, and this rule reflects the CCP.

Civil Justice Reform (E.O. 12988)

In accordance with E.O. 12988, the Office of the Solicitor has determined that this rule would not unduly burden the judicial system and that it meets the requirements of sections 3(a) and 3(b)(2) of the Order. This rule would clarify established regulations and result in better understanding of the regulations by refuge visitors.

Energy Supply, Distribution or Use (E.O. 13211)

On May 18, 2001, the President issued E.O. 13211 on regulations that significantly affect energy supply, distribution, and use. E.O. 13211 requires agencies to prepare Statements of Energy Effects when undertaking certain actions. Because this rule is a modification of an existing hunting and fishing program on the refuge, we do not expect it to significantly affect energy supplies, distribution, and use. Therefore, this action is a not a significant energy action and no Statement of Energy Effects is required.

Consultation and Coordination with Indian Tribal Governments (E.O. 13175)

In accordance with E.O. 13175, we have evaluated possible effects on federally recognized Indian tribes and have determined that there are no effects. We coordinate recreational use on national wildlife refuges with Tribal governments having adjoining or overlapping jurisdiction before we propose changes to the regulations. During scoping and preparation of the Final EIS, we contacted 35 Indian tribes to inform them of the process and seek their comments. Only the Iowa Tribe of Oklahoma provided comment on the Draft EIS, saying they have an historic presence in counties adjacent to the refuge, and they wish to be kept informed of any artifact discoveries as we implement refuge plans. We replied in the Final EIS that we appreciated their interest in the refuge and would keep them informed of any cultural resource issues and discoveries.

Paperwork Reduction Act

This rule does not contain any information collection requirements other than those already approved by the Office of Management and Budget under the Paperwork Reduction Act (44 U.S.C. 3501 *et seq.*) (OMB Control Numbers 1018–0102 and 1018–0140). See 50 CFR 25.23 for information concerning that approval. An agency may not conduct or sponsor and a person is not required to respond to a collection of information unless it displays a currently valid OMB control number.

Endangered Species Act Section 7 Consultation

During preparation of the Final EIS, we completed a section 7 consultation and determined that the preferred alternative, which included hunting and fishing changes reflected in this rule, is not likely to adversely affect individuals of listed or candidate species or designated critical habitat of such species. The Service's Ecological Services Office concurred with this determination. The listed species on the refuge is the Higgins eye mussel; candidate species are the Eastern massasauga and spectaclecase and sheepnose mussels. A copy of the section 7 evaluation and accompanying biological assessment is available from the refuge at the locations listed in the ''Available Information for Specific Districts of the Refuge'' section of this document.

National Environmental Policy Act (NEPA; 42 U.S.C. 4321 et seq.)

Concerning the actions that are the subject of this rulemaking, we have complied with NEPA through the preparation of a Final EIS and Record of Decision, which include the major hunting changes reflected in this rule. An Environmental Assessment (EA) was prepared for the 75-acre No Hunting and Trapping Zone on Brice Prairie near Pool 7. The NEPA documents are available on or through our website at *http://www.fws.gov/midwest/UpperMississippiRiver/*. Then click on Current Topics on the left, which will bring you to the Mathy Tract EA.

Primary Author

Don Hultman, Refuge Manager, Upper Mississippi River National Wildlife and Fish Refuge, is the primary author of this rulemaking document.

List of Subjects

50 CFR Part 25

Administrative practice and procedure, Concessions, Reporting and recordkeeping requirements, Safety, Wildlife refuges.

50 CFR Part 32

Fishing, Hunting, Reporting and recordkeeping requirements, Wildlife, Wildlife refuges.

Regulation Promulgation

■ For the reasons set forth in the preamble, we amend title 50, Chapter I, subchapter C of the Code of Federal Regulations as follows:

PART 25—[AMENDED]

■ 1. The authority citation for part 25 continues to read as follows:

Authority: 5 U.S.C. 301; 16 U.S.C. 460k, 664, 668dd, and 715i, 3901 *et seq.*; and Pub. L. 102–402, 106 Stat. 11961.

■ 2. Revise § 25.23 to read as follows:

§ 25.23 What are the general regulations and information collection requirements?

The Office of Management and Budget has approved the information collection requirements contained in subchapter C, parts 25, 32, and 36 under 44 U.S.C. 3501 *et seq.* and assigned the following control numbers: 1018–0014 for Special Use Permit Applications on National Wildlife Refuges in Alaska; 1018–0102 for Special Use Permit Applications on National Wildlife Refuges Outside Alaska; and 1018–0140 for Hunting and Fishing Application Forms and Activity Reports for National Wildlife Refuges. We collect information to assist us in administering our programs in accordance with statutory authorities that require that recreational or other uses be compatible with the primary purposes for which the areas were established. Send comments on any aspect of these forms to the Information Collection Clearance Officer, U.S. Fish and Wildlife Service, MS 222 ARLSQ, Washington, DC 20240.

PART 32—[AMENDED]

■ 3. The authority citation for part 32 continues to read as follows:

Authority: 5 U.S.C. 301; 16 U.S.C. 460k, 664, 668dd–668ee, and 715i.

■ 4. Amend § 32.42 Minnesota by revising paragraphs A.2., A.3., A.4., and A.6. of Upper Mississippi River National Wildlife and Fish Refuge to read as follows:

§ 32.42 Minnesota.

* * * * *

Upper Mississippi River National Wildlife and Fish Refuge

A. Migratory Game Bird Hunting. * * *

* * * * *

2. In areas posted and shown on maps as ''No Entry—Sanctuary,'' we prohibit migratory bird hunting at all times and all public entry except as specified. These areas are named and located as follows:

i. Pool Slough, Pool 9, Minnesota/Iowa, 1,126 acres.

ii. Bertom Island, Pool 11, Wisconsin, 31 acres.

iii. Guttenberg Ponds, Pool 11, Iowa, 252 acres.

iv. Spring Lake, Pool 13, Illinois, 3,697 acres.

3. In areas posted and shown on maps as ''Area Closed'' and ''Area Closed—No Motors,'' we prohibit migratory bird hunting at all times. We ask that you practice voluntary avoidance of these areas by any means or for any purpose from October 15 to the end of the respective State duck season. In areas also marked ''no motors,'' we prohibit the use of motors on watercraft from October 15 to the end of the respective State duck season. These ''Area(s) Closed'' are named and located as follows:

i. Big Lake, Pool 4, Wisconsin, 2,210 acres.

ii. Weaver Bottoms/Lost Island, Pool 5, Minnesota/Wisconsin, 3,508 acres.

iii. Polander Lake, Pool 5A, Minnesota/Wisconsin, 1,873 acres.

iv. Lake Onalaska, Pool 7, Wisconsin, 7,366 acres (voluntary avoidance on 3,365 acres until mid-November).

v. Wisconsin Islands, Pool 8, Minnesota/Wisconsin, 6,538 acres.

vi. Harpers Slough, Pool 9, Iowa/Wisconsin, 5,209 acres.

vii. Wisconsin River Delta, Pool 10, Wisconsin, 1,414 acres (closed November 1 to end of duck season).

viii. 12-Mile Island, Pool 11, Iowa, 1,139 acres.

ix. Bertom–McCartney, Pool 11, Wisconsin, 2,384 acres (no voluntary avoidance provision).

x. Pleasant Creek, Pool 13, Iowa, 2,191 acres.

xi. Elk River, Pool 13, Iowa, 1,248 acres.

The ''Area(s) Closed—No Motors'' are named and located as follows:

xii. Peterson Lake, Pool 4, Wisconsin 572 acres.

xiii. Rieck's Lake, Pool 4, Wisconsin, 499 acres.

xiv. Spring Lake, Pool 5, Wisconsin, 254 acres.

xv. Sturgeon Slough, Pool 10, Wisconsin, 340 acres.

xvi. 12-Mile Island, Pool 10, Iowa, 540 acres.

xvii. John Deere Marsh, Pool 11, Iowa, 439 acres.

xviii. Kehough Slough, Pool 12, Illinois, 333 acres.

xiv. Beaver Island, Pool 14, Iowa, 864 acres.

4. In areas posted and shown on maps as ''No Hunting Zone'' or ''No Hunting or Trapping Zone,'' we prohibit migratory bird hunting at all times. These areas are named and located as follows:

i. Buffalo River, Pool 4, Wisconsin, 219 acres.

ii. Fountain City Bay, Pool 5A, Wisconsin, 24 acres.

iii. Upper Halfway Creek Marsh, Pool 7, Wisconsin, 143 acres.

iv. Mathy Tract (Brice Prairie), Pool 7, Wisconsin, 75 acres.

v. Hunter's Point, Pool 8, Wisconsin, 82 acres.

vi. Goose Island, Pool 8, Wisconsin, 984 acres (also no motors and voluntary avoidance as in condition A3).

vii. Sturgeon Slough, Pool 10, Wisconsin, 66 acres.

viii. Goetz Island Trail, Pool 11, Iowa, 31 acres.

ix. Crooked Slough Backwater, Pool 13, Illinois, 2,453 acres.

x. Crooked Slough Proper, Pool 13, Illinois, 270 acres.

xi. Frog Pond, Pool 13, Illinois, 64 acres.

xii. Ingersoll Learning Center, Pool 13, Illinois, 41 acres.

* * * * *

6. You must immediately make a reasonable attempt to retrieve downed waterfowl unless the bird lies in plain sight of you, is clearly dead, and there is no risk of the bird drifting off due to wind or current. You may retrieve dead or wounded game from areas posted ''Area Closed,'' ''No Hunting Zone,'' and ''No Hunting or Trapping Zone'' provided you do not attempt to chase birds from the area. You may not use a motor to aid in the retrieval of game in areas posted ''Area Closed—No Motors.'' You may not retrieve birds or other game from areas posted ''No Entry—Sanctuary.''

* * * * *

Dated: August 6, 2009.

Jane Lyder,

Acting Assistant Secretary for Fish and Wildlife and Parks.

[FR Doc. E9–19590 Filed 8–14–09; 8:45 am]

BILLING CODE 4310–55–S

Proposed Rules

Federal Register
Vol. 74, No. 157
Monday, August 17, 2009

This section of the FEDERAL REGISTER contains notices to the public of the proposed issuance of rules and regulations. The purpose of these notices is to give interested persons an opportunity to participate in the rule making prior to the adoption of the final rules.

ENVIRONMENTAL PROTECTION AGENCY

40 CFR Part 52

[EPA–R09–OAR–2009–0521; FRL–8946–1]

Revisions to the Arizona State Implementation Plan; Pinal County

AGENCY: Environmental Protection Agency (EPA).

ACTION: Proposed rule.

SUMMARY: EPA is proposing to approve revisions to the Pinal County portion of the Arizona State Implementation Plan (SIP). These revisions concern particulate matter (PM) emissions from construction, earthmoving, and related activities, and commercial and residential unpaved parking lots. We are approving local rules that regulate these emission sources under the Clean Air Act as amended in 1990 (CAA or the Act). We are taking comments on this proposal and plan to follow with a final action.

DATES: Any comments must arrive by September 16, 2009.

ADDRESSES: Submit comments, identified by docket number EPA–R09–OAR–2009–0521, by one of the following methods:

1. *Federal eRulemaking Portal: http://www.regulations.gov*. Follow the on-line instructions.
2. *E-mail: steckel.andrew@epa.gov*.
3. *Mail or deliver:* Andrew Steckel (Air-4), U.S. Environmental Protection Agency Region IX, 75 Hawthorne Street, San Francisco, CA 94105–3901.

Instructions: All comments will be included in the public docket without change and may be made available online at *http://www.regulations.gov*, including any personal information provided, unless the comment includes Confidential Business Information (CBI) or other information whose disclosure is restricted by statute. Information that you consider CBI or otherwise protected should be clearly identified as such and should not be submitted through *http://www.regulations.gov* or e-mail. *http://www.regulations.gov* is an ''anonymous access'' system, and EPA will not know your identity or contact information unless you provide it in the body of your comment. If you send e-mail directly to EPA, your e-mail address will be automatically captured and included as part of the public comment. If EPA cannot read your comment due to technical difficulties and cannot contact you for clarification, EPA may not be able to consider your comment.

Docket: The index to the docket for this action is available electronically at *http://www.regulations.gov* and in hard copy at EPA Region IX, 75 Hawthorne Street, San Francisco, California. While all documents in the docket are listed in the index, some information may be publicly available only at the hard copy location (*e.g.*, copyrighted material), and some may not be publicly available in either location (*e.g.*, CBI). To inspect the hard copy materials, please schedule an appointment during normal business hours with the contact listed in the **FOR FURTHER INFORMATION CONTACT** section.

FOR FURTHER INFORMATION CONTACT: Jerald S. Wamsley, EPA Region IX, (415) 947–4111, *wamsley.jerry@epa.gov.*

SUPPLEMENTARY INFORMATION: Throughout this document, ''we'', ''us'', and ''our'' refer to EPA.

Table of Contents

I. The State's Submittal
A. What rules did the State submit?
B. Are there other versions of these rules?
C. What is the purpose of the submitted rules?
II. EPA's Evaluation and Action
A. How is EPA evaluating the rules?
B. Do the rules meet the evaluation criteria?
C. EPA recommendations to further improve the rules
D. Public Comment and Final Action
III. Statutory and Executive Order Reviews

I. The State's Submittal

A. What rules did the State submit?

Table 1 lists the rules addressed by this proposal with the dates that they were adopted by Pinal County and submitted by the Arizona Department of Environmental Quality.

TABLE 1—SUBMITTED RULES

Local agency	Rule #	Rule title	Adopted	Submitted
Pinal County	2–8–302	Performance Standards—Hayden PM10 Non-attainment Area	01/07/09	06/12/09
	4–2–020	Fugitive Dust—General	12/04/02	06/12/09
	4–2–030	Fugitive Dust—Definitions	12/04/02	06/12/09
	4–4	PM–10 Non-attainment Area Rules; Dustproofing and Stabilization for Commercial Unpaved Parking, Drive and Working Yards.	06/03/09	06/12/09
	4–5	PM–10 Non-attainment Area Rules; Stabilization for Residential Parking and Drives.	06/03/09	06/12/09
	4–7	Construction Sites in Non-Attainment Areas—Fugitive Dust	06/03/09	06/12/09
	4–9	Test Methods	06/03/09	06/12/09

On July 15, 2009, EPA found these rule submittals were complete according to completeness criteria in 40 CFR Part 51 Appendix V. These criteria must be met before formal EPA review can begin.

B. Are there other versions of these rules?

There are no previous versions of these rules in the SIP.

C. What is the purpose of the submitted rules?

PM contributes to effects that are harmful to human health and the environment, including premature mortality, aggravation of respiratory and cardiovascular disease, decreased lung function, visibility impairment, and damage to vegetation and ecosystems. Section 110(a) of the CAA requires States to submit regulations that control PM emissions. Each of the submitted rules are discussed below.

Rules 4–2–020 and 4–2–030 are sections of Pinal County Code Chapter 4, Article 2—Fugitive Dust providing a general statement of article applicability within Section 020 and a set of definitions for the article within Section 030.

Rule 2–8–302 is a rule designed to limit the emissions of fugitive dust or particulate matter from construction, roadway building, use and maintenance, and bulk material handling, storage, and transport by subjecting these activities to a twenty percent opacity restriction.

Rule 4–4 is a rule designed to limit the emissions of fugitive dust or particulate matter from commercially operated unpaved parking lots, drive ways, and working yards. Rule 4–4 provisions include a 20% opacity and 0% visible emissions property line standard, silt content and silt loading stabilization standards and requirements for clean-up of material track-out onto paved public roads. The rule also includes requirements for recordkeeping of dust stabilization efforts.

Rule 4–5 is a rule designed to limit the emissions of fugitive dust or particulate matter from residential unpaved parking lots and drive ways. Rule 4–5 provisions include surface stabilization requirements and control measures and requirements for clean-up of material track-out onto paved public roads.

Rule 4–7 is a rule designed to limit the emissions of fugitive dust or particulate matter from development activity related to earthmoving and construction sites such as bulk material hauling, unpaved parking lots, vehicle track-out, and disturbed soil in open areas. Rule 4–7 provisions include a twenty percent opacity and zero percent visible emissions property line standard, requirements to implement Best Available Control Measures (BACM) for material track-out onto paved public roads, bulk material handling and movement, unpaved roadways and unpaved parking areas on a site. The rule also includes provisions for a dust control permit program, dust control plan requirements, and related recordkeeping requirements.

Rule 4–9 contains the test methods for determining compliance with the opacity and soil stabilization requirements of Rules 4–7, 4–4, and 4–5.

Rules 4–7, 4–4, and 4–5 apply to the Apache Junction portion of Pinal County within the Phoenix PM Nonattainment Area (NAA), referred to in the rule as T1N R8E (Township 1 North, Range 8 East). The rules do not apply to the remaining portion of Pinal County. These rules are part of the Pinal County contribution to the Phoenix serious area PM–10 attainment plan control strategy.

Rule 2–8–302 applies to the Hayden planning area PM–10 non-attainment area portion of Pinal County defined in 40 CFR 81.303 (See also 72 FR 14422, March 28, 2007). It is neither applicable to the Apache Junction serious PM–10 non-attainment area, nor the remainder of Pinal County.

EPA's technical support document (TSD) has more information about these rules.

II. EPA's Evaluation and Action

A. How is EPA evaluating the rules?

Generally, SIP rules must be enforceable (see section 110(a) of the Act) and must not relax existing requirements (see sections 110(l) and 193). In addition, SIP rules must implement Reasonably Available Control Measures (RACM), including Reasonably Available Control Technology (RACT), in moderate PM nonattainment areas, and Best Available Control Measures (BACM), including Best Available Control Technology (BACT), in serious PM nonattainment areas (see CAA sections 189(a)(1) and 189(b)(1)). As mentioned earlier, Pinal County regulates two PM nonattainment areas: The Hayden Area, classified as moderate; and, the Apache Junction area, classified as serious (see 40 CFR part 81). Consequently, Rule 2–8–302 must implement RACM, while Rules 4–7, 4–4, and 4–5 must implement BACM.

Guidance and policy documents that we use to help evaluate specific enforceability and RACM or BACM requirements consistently include the following:

1. Portions of the proposed post-1987 ozone and carbon monoxide policy that concern RACT, 52 FR 45044, November 24, 1987.
2. ''Issues Relating to VOC Regulation Cutpoints, Deficiencies, and Deviations; Clarification to Appendix D of November 24, 1987 **Federal Register** Notice,'' (Blue Book), notice of availability published in the May 25, 1988 **Federal Register**.
3. ''Guidance Document for Correcting Common VOC & Other Rule Deficiencies,'' EPA Region 9, August 21, 2001 (the Little Bluebook).
4. ''State Implementation Plans; General Preamble for the Implementation of Title I of the Clean Air Act Amendments of 1990,'' 57 FR 13498 (April 16, 1992); 57 FR 18070 (April 28, 1992).
5. ''State Implementation Plans for Serious PM–10 Nonattainment Areas, and Attainment Date Waivers for PM–10 Nonattainment Areas Generally; Addendum to the General Preamble for the Implementation of Title I of the Clean Air Act Amendments of 1990,'' 59 FR 41998 (August 16, 1994).
6. ''PM–10 Guideline Document,'' EPA 452/R–93–008, April 1993.
7. ''Fugitive Dust Background Document and Technical Information Document for Best Available Control Measures,'' EPA 450/2–92–004, September 1992.

B. Do the rules meet the evaluation criteria?

We believe these rules are consistent with the relevant policy and guidance regarding enforceability, RACM, BACM, and SIP relaxations.

On August 1, 2007, EPA gave a limited approval and limited disapproval to rules amending the SIP for Pinal County (see 72 **Federal Register** (FR) 41896). For further discussion, please see our October 17, 2006 proposal of this action at 71 FR 60934. In this rulemaking, we identified the deficiencies listed below.

(1) As written, Rule 4–2–020, Section B effectively exempts agricultural activities from the fugitive dust rules without justification.

(2) Rule 4–2–030, Definition 3, defines ''reasonable precaution'' in highly general terms. The term ''reasonable precaution'' is then used in every section of Rule 4–2–040, to define what actions must be taken to mitigate fugitive dust emissions from relevant activities. This general requirement is not sufficiently clear or enforceable.

(3) Rule 4–2–050 does not contain recordkeeping provisions. The absence of recordkeeping provisions makes the all of the submitted rules difficult to enforce.

Our final action on August 1, 2007 started sanctions clocks as required by Section 179 of the CAA. The first sanctions clock expired on March 1, 2009 and the offset sanctions have been in effect.

Pinal County's submittal of 4–2–020 and 4–2–030 is intended to address and

correct the exemption of agricultural activities from fugitive dust rules. In these submittals, the exemption for agricultural activities at subsection 4–2–020.B, along with the definition of ''normal farm cultural practice'' at subsection 4–2–030.2, were deleted; thus, correcting this deficiency. After the 12/02/02 adoption of this amendment, the Pinal County Governing Board amended its list of SIP measures (Chapter 1, Article 1, Section 105—SIP List) on 01/07/09 to reflect its 12/02/02 action and has submitted this list to EPA.

Pinal County's submittal of Rules 2–8–302, 4–4, 4–5, 4–7, and 4–9 is intended to address and correct the Rule 4–2–030 ''reasonable precautions'' and Rule 4–2–050 recordkeeping deficiencies in our limited disapproval.

Should EPA complete a final approval action on the submitted rules, we will find that Pinal County has corrected the deficiencies described above. Consequently, sanctions will be terminated and our Federal Implementation Plan (FIP) obligation will be removed.

Today, we are also publishing an interim final determination with this proposal that will stay sanctions during the public comment period and while we review any public comments we may receive.

The TSDs have more information on our evaluation. Because correcting the 4–2–020 and 4–2–030 deficiencies only involved removing the agricultural activities exemption, we have not provided a TSD discussing this amendment to Rules 4–2–020 and 4–2–030.

C. EPA Recommendations To Further Improve the Rules

The TSD for Rule 4–7 describes additional rule revisions that do not affect EPA's current action but are recommended for the next time Pinal County modifies Rule 4–7 and 4–9. Rule 4–9 contains an editorial error that should be corrected as soon as practicable.

D. Public Comment and Final Action

Because EPA believes the submitted rules fulfill all relevant requirements, we are proposing to fully approve them as described in section 110(k)(3) of the Act. We will accept comments from the public on this proposal for the next 30 days. Unless we receive convincing new information during the comment period, we intend to publish a final approval action that will incorporate these rules into the federally enforceable SIP and remove all sanctions and FIP obligations associated with our August 1, 2007 limited disapproval.

III. Statutory and Executive Order Reviews

Under the Clean Air Act, the Administrator is required to approve a SIP submission that complies with the provisions of the Act and applicable Federal regulations. 42 U.S.C. 7410(k); 40 CFR 52.02(a). Thus, in reviewing SIP submissions, EPA's role is to approve State choices, provided that they meet the criteria of the Clean Air Act. Accordingly, this action merely approves State law as meeting Federal requirements and does not impose additional requirements beyond those imposed by State law. For that reason, this action:

- Is not a ''significant regulatory action'' subject to review by the Office of Management and Budget under Executive Order 12866 (58 FR 51735, October 4, 1993);
- does not impose an information collection burden under the provisions of the Paperwork Reduction Act (44 U.S.C. 3501 *et seq.*);
- is certified as not having a significant economic impact on a substantial number of small entities under the Regulatory Flexibility Act (5 U.S.C. 601 *et seq.*);
- does not contain any unfunded mandate or significantly or uniquely affect small governments, as described in the Unfunded Mandates Reform Act of 1995 (Pub. L. 104–4);
- does not have Federalism implications as specified in Executive Order 13132 (64 FR 43255, August 10, 1999);
- is not an economically significant regulatory action based on health or safety risks subject to Executive Order 13045 (62 FR 19885, April 23, 1997);
- is not a significant regulatory action subject to Executive Order 13211 (66 FR 28355, May 22, 2001);
- is not subject to requirements of Section 12(d) of the National Technology Transfer and Advancement Act of 1995 (15 U.S.C. 272 note) because application of those requirements would be inconsistent with the Clean Air Act; and
- does not provide EPA with the discretionary authority to address, as appropriate, disproportionate human health or environmental effects, using practicable and legally permissible methods, under Executive Order 12898 (59 FR 7629, February 16, 1994).

In addition, this rule does not have tribal implications as specified by Executive Order 13175 (65 FR 67249, November 9, 2000), because the SIP is not approved to apply in Indian country located in the State, and EPA notes that it will not impose substantial direct costs on tribal governments or preempt tribal law.

List of Subjects in 40 CFR Part 52

Environmental protection, Air pollution control, Intergovernmental relations, Particulate matter, Reporting and recordkeeping requirements.

Authority: 42 U.S.C. 7401 *et seq.*

Dated: July 31, 2009.

Laura Yoshii,

Acting Regional Administrator, Region IX.

[FR Doc. E9–19651 Filed 8–14–09; 8:45 am]

BILLING CODE 6560–50–P

ENVIRONMENTAL PROTECTION AGENCY

40 CFR Part 80

[EPA–HQ–OAR–2005–0161; FRL–8945–6]

RIN 2060–A081

Regulation of Fuels and Fuel Additives: Changes to Renewable Fuel Standard Program; Notice of Availability of Expert Peer Review Record

AGENCY: Environmental Protection Agency (EPA).

ACTION: Request for comments.

SUMMARY: The U.S. Environmental Protection Agency (''EPA'') announces the availability of documents pertaining to the expert peer review record completed on the Renewable Fuel Standard Program (RFS2) Lifecycle Greenhouse Gas (GHG) Analysis. On May 5, 2009, EPA announced proposed revisions to the National Renewable Fuel Standard program (commonly known as the RFS program) as required by the Energy Independence and Security Act (EISA) of 2007. EISA established new renewable fuel categories and eligibility requirements, including setting the first ever mandatory GHG reduction thresholds for the various categories of renewable fuels. EISA also defined the term lifecycle greenhouse gas (GHG) emissions. As part of proposed revisions to the RFS program and in accordance with the EISA definition of GHG emissions, EPA examined the GHG impacts associated with different types of renewable fuels. Several new pieces of analysis were developed to support this lifecycle assessment. EPA decided to initiate an independent peer review to help respond to stakeholder concerns and to ensure that the Agency makes decisions based on the best science available. The Agency, in accordance

with the Office of Management and Budget and EPA peer review guidance contracted with independent, third party sources to conduct an external expert peer review of this work. The results of the expert peer review are being made available to the public for notice and comment to supplement the current record.

DATES: Written comments must be received on or before September 25, 2009.

ADDRESSES: Submit your comments, identified by Docket ID No. EPA–HQ–OAR–2005–0161, by one of the following methods:

- *www.regulations.gov*: Follow the on-line instructions for submitting comments.
- *E-mail: a-and-r-docket@epa.gov*.
- *Mail:* Air and Radiation Docket and Information Center, Environmental Protection Agency, Mailcode: 2822T, 1200 Pennsylvania Ave., NW., Washington, DC 20460. In addition, please mail a copy of your comments on the information collection provisions to the Office of Information and Regulatory Affairs, Office of Management and Budget (OMB), Attn: Desk Officer for EPA, 725 17th St., NW., Washington, DC 20503.
- *Hand Delivery:* EPA Docket Center, EPA West Building, Room 3334, 1301 Constitution Ave., NW., Washington, DC 20004. Such deliveries are only accepted during the Docket's normal hours of operation, and special arrangements should be made for deliveries of boxed information.

Instructions: Direct your comments to Docket ID No. EPA–HQ–OAR–2005–0161. EPA's policy is that all comments received will be included in the public docket without change and may be made available online at *www.regulations.gov*, including any personal information provided, unless the comment includes information claimed to be Confidential Business Information (CBI) or other information whose disclosure is restricted by statute. Do not submit information that you consider to be CBI or otherwise protected through *www.regulations.gov* or e-mail. The *www.regulations.gov* Web site is an ''anonymous access'' system, which means EPA will not know your identity or contact information unless you provide it in the body of your comment. If you send an e-mail comment directly to EPA without going through *www.regulations.gov* your e-mail address will be automatically captured and included as part of the comment that is placed in the public docket and made available on the Internet. If you submit an electronic comment, EPA recommends that you include your name and other contact information in the body of your comment and with any disk or CD–ROM you submit. If EPA cannot read your comment due to technical difficulties and cannot contact you for clarification, EPA may not be able to consider your comment. Electronic files should avoid the use of special characters, any form of encryption, and be free of any defects or viruses. For additional information about EPA's public docket visit the EPA Docket Center homepage at *http://www.epa.gov/epahome/dockets.htm*. For additional instructions on submitting comments, please refer to the notice of proposed rulemaking (Section XI, Public Participation, of the **SUPPLEMENTARY INFORMATION** section of the proposed rulemaking document).

How Can I Access the Docket?

All documents in the docket are listed in the *www.regulations.gov* index. Although listed in the index, some information is not publicly available, e.g., CBI or other information whose disclosure is restricted by statute. Certain other material, such as copyrighted material, will be publicly available only in hard copy. Publicly available docket materials are available either electronically in *www.regulations.gov* or in hard copy at the Air and Radiation Docket and Information Center, EPA/DC, EPA West, Room 3334, 1301 Constitution Ave., NW., Washington, DC. The Public Reading Room is open from 8:30 a.m. to 4:30 p.m., Monday through Friday, excluding legal holidays. The telephone number for the Public Reading Room is (202) 566–1744, and the telephone number for the Air Docket is (202) 566–1742.

How Can I Get Copies of This Document, the Proposed Rule, and Other Related Information?

The EPA has established a docket for this action under Docket ID No. EPA–HQ–OAR– 2005–0161. The EPA has also developed a Web site for the proposed RFS2 rule, including the notice of proposed rulemaking, at: *http://www.epa.gov/otaq/renewablefuels/index.htm*. Please refer to the notice of proposed rulemaking for detailed information on accessing information related to the proposal, including the expert peer review record.

FOR FURTHER INFORMATION CONTACT: Julia MacAllister, Office of Transportation and Air Quality, Assessment and Standards Division, Environmental Protection Agency, 2000 Traverwood Drive, Ann Arbor, MI 48105; telephone number: (734) 214–4131; Fax number: (734) 214–4816; E-mail address: *macallister.julia@epa.gov*, or Assessment and Standards Division Hotline; telephone number (734) 214–4636; E-mail address: *asdinfo@epa.gov*.

SUPPLEMENTARY INFORMATION:

Background: To meet the lifecycle requirements as defined by the Energy Independence and Security Act of 2007 (EISA), EPA, in consultation with the U.S. Department of Agriculture (USDA) and the U.S. Department of Energy (DOE), developed a comprehensive methodology, including an assessment of significant indirect land use impacts. EPA has specifically relied on a number of expert peer reviewed models and data sources for individual components of the analysis. This methodology is described in detail in both the Preamble and Draft Regulatory Impact Analysis of EPA's Notice of Proposed Rulemaking available at: *http://www.epa.gov/OMS/renewablefuels/#regulations*.

In addition, several new pieces of analysis were developed to support this lifecycle assessment and these new pieces underwent scientific expert peer review contemporaneously with the public comment period of the rulemaking. The new pieces of analysis presented for expert peer review were: (1) Land use modeling (use of satellite data/land conversion GHG emission factors); (2) Methods to account for the variable timing of GHG emissions; (3) EPA estimates of GHG emissions from foreign crop production (modeling and data used); (4) How the models EPA relied upon are used together to provide overall lifecycle estimates (not a review of models themselves but how the results of each have been used together).

The reviews were conducted following the Office of Management and Budget's (OMB) expert peer review guidance that ensures consistent government-wide implementation of expert peer review and according to EPA's longstanding and rigorous expert peer review policies.

In accordance with this guidance, EPA used independent, third-party contractors to conduct the external expert peer review. The contractor was responsible for identifying a list of expert reviewers and checking for possible conflict of interest. EPA provided the contractor with a description of expertise required and examples of experts that fit the expertise needed for each review. EPA also provided a list of names, submitted from several external sources, for the contractor to consider during the selection process. Further, EPA provided charge questions for each

review which guided the review process. For these particular expert peer reviews, the charge questions were reviewed by OMB. As part of the review process, the Contractor also developed the expert peer review record which EPA is now publicly available. The expert peer reviewers were charged with working independently and were not asked to reach a consensus decision.

Notice of Availability: The expert peer review records completed in this process are now available in the public docket and available at *http://www.epa.gov/otaq/renewablefuels/index.htm*.

The docket includes: Materials provided to the expert peer reviewers; list of names and affiliations of the expert peer reviewers; a summary of comments, as well as comments attributable to individual reviewers.

Dated: August 7, 2009.

Margo T. Oge,

Director, Office of Transportation and Air Quality.

[FR Doc. E9–19466 Filed 8–14–09; 8:45 am]

BILLING CODE 6560–50–P

ENVIRONMENTAL PROTECTION AGENCY

40 CFR Part 300

[EPA–HQ–SFUND–2009–0227; FRL–8945–2]

National Oil and Hazardous Substance Pollution Contingency Plan; National Priorities List

AGENCY: Environmental Protection Agency.

ACTION: Notice of Intent To Delete the Island Chemical Corp/Virgin Islands Chemical Corp. Superfund Site From the National Priorities List.

SUMMARY: The Environmental Protection Agency (EPA) Region 2 is issuing a Notice of Intent to Delete the Island Chemical Corp/Virgin Islands Chemical Corp. (Site) located in St. Croix, Virgin Islands, from the National Priorities List (NPL) and requests public comments on this proposed action. The NPL, promulgated pursuant to section 105 of the Comprehensive Environmental Response, Compensation, and Liability Act (CERCLA) of 1980, as amended, is an appendix of the National Oil and Hazardous Substances Pollution Contingency Plan (NCP). The EPA and the Territory of U.S.Virgin Islands, through the Virgin Islands Department of Planning and Natural Resources have determined that all appropriate response actions under CERCLA, have been completed. However, this deletion does not preclude future actions under Superfund.

DATES: Comments must be received by September 16, 2009.

ADDRESSES: Submit your comments, identified by Docket ID no. EPA–HQ–SFUND–2009–0227, by one of the following methods:

- *http://www.regulations.gov*. Follow on-line instructions for submitting comments.
- *E-mail: kwan.caroline@epa.gov*.
- *Fax:* (212) 637–4284.
- *Mail:* U.S. Environmental Protection Agency, Region 2, 290 Broadway, 20th floor, New York, NY 10007–1866.
- *Hand delivery:* U.S. Environmental Protection Agency, Region 2, 290 Broadway, 20th floor, New York, NY. Such deliveries are only accepted during the Docket's normal hours of operation, and special arrangements should be made for deliveries of boxed information.

Instructions: Direct your comments to Docket ID no. EPA–HQ–SFUND–2009–0227. EPA's policy is that all comments received will be included in the public docket without change and may be made available online at *http://www.regulations.gov*, including any personal information provided, unless the comment includes information claimed to be Confidential Business Information (CBI) or other information whose disclosure is restricted by statute. Do not submit information that you consider to be CBI or otherwise protected through *http://www.regulations.gov* or e-mail. The *http://www.regulations.gov* Web site is an ''anonymous access'' system, which means EPA will not know your identity or contact information unless you provide it in the body of your comment. If you send an e-mail comment directly to EPA without going through *http://www.regulations.gov*, your e-mail address will be automatically captured and included as part of the comment that is placed in the public docket and made available on the Internet. If you submit an electronic comment, EPA recommends that you include your name and other contact information in the body of your comment and with any disk or CD–ROM you submit. If EPA cannot read your comment due to technical difficulties and cannot contact you for clarification, EPA may not be able to consider your comment. Electronic files should avoid the use of special characters, any form of encryption, and be free of any defects or viruses.

Docket: All documents in the docket are listed in the *http://www.regulations.gov* index. Although listed in the index, some information is not publicly available, *e.g.*, CBI or other information whose disclosure is restricted by statue. Certain other material, such as copyrighted material, will be publicly available only in the hard copy. Publicly available docket materials are available either electronically in *http://www.regulations.gov* or in hard copy at:

U.S. Environmental Protection Agency, Region 2, 290 Broadway, Superfund, Record Center, Room 1828, New York, NY 10007–1866. *Hours:* Monday to Friday from 9 a.m. to 5 p.m. Telephone No. (212) 637–4308

Department of Planning and Natural Resources, 45 Mars Hill, Frederiksted, U.S. Virgin Islands, 00850. *Hours:* Monday to Friday from 9 a.m. to 5 p.m. Telephone No. (340) 773–1082.

U.S. Environmental Protection Agency, Caribbean Environmental Protection Division, Tunick Building, Suite 102, 1336 Beltjen Road, St. Thomas, VI 00801. *Hours:* Monday to Friday from 9 a.m. to 5 p.m. Telephone No. (340) 714–2333.

FOR FURTHER INFORMATION CONTACT: Ms. Caroline Kwan, Remedial Project Manager, U.S. Environmental Protection Agency, Region 2, 290 Broadway, 20th floor, New York, NY 10007–1866, (212) 637–4275, e-mail: *kwan.caroline@epa.gov*.

SUPPLEMENTARY INFORMATION: In the ''Rules and Regulations'' Section of today's **Federal Register**, we are publishing a direct final Notice of Deletion of Island Chemical Corp/Virgin Islands Chemical Corp. Site without prior Notice of Intent to Delete because we view this as a noncontroversial revision and anticipate no adverse comment. We have explained our reasons for this deletion in the preamble to the direct final Notice of Deletion, and those reasons are incorporated herein. If we receive no adverse comment(s) on this deletion action, we will not take further action on this Notice of Intent to Delete. If we receive adverse comment(s), we will withdraw the direct final Notice of Deletion, and it will not take effect. We will, as appropriate, address all public comments in a subsequent final Notice of Deletion based on this Notice of Intent to Delete. We will not institute a second comment period on this Notice of Intent to Delete. Any parties interested in commenting must do so at this time.

For additional information, see the direct final Notice of Deletion which is located in the Rules section of this **Federal Register**.

List of Subjects in 40 CFR Part 300

Environmental protection, Air pollution control, Chemicals, Hazardous waste, Hazardous substances, Intergovernmental relations, Penalties, Reporting and recordkeeping requirements, Superfund, Water pollution control, Water supply.

Authority: 33 U.S.C. 1321(c)(2); 42 U.S.C. 9601–9657; E.O. 12777, 56 FR 54757, 3 CFR, 1991 Comp., p. 351; E.O. 12580, 52 FR 2923; 3 CFR, 1987 Comp., p. 193.

Dated: August 3, 2009.

George Pavlou,

Acting Regional Administrator, Region 2.

[FR Doc. E9–19509 Filed 8–14–09; 8:45 am]

BILLING CODE 6560–50–P

DEPARTMENT OF TRANSPORTATION

National Highway Traffic Safety Administration

49 CFR Part 544

[Docket No. NHTSA–2009–0050]

RIN 2127–AK46

Insurer Reporting Requirements; List of Insurers Required To File Reports

AGENCY: National Highway Traffic Safety Administration (NHTSA), Department of Transportation (DOT).

ACTION: Notice of proposed rulemaking.

SUMMARY: This document proposes to amend Appendices A, B and C of 49 CFR Part 544, Insurer Reporting Requirements. The appendices list those passenger motor vehicle insurers that are required to file reports on their motor vehicle theft loss experiences. An insurer included in any of these appendices would be required to file three copies of its report for the 2006 calendar year before October 25, 2009. If the passenger motor vehicle insurers remain listed, they must submit reports by each subsequent October 25. We are proposing to add and remove several insurers from relevant appendices.

DATES: Comments must be submitted not later than October 16, 2009.

ADDRESSES: You may submit comments, identified by DOT Docket No. NHTSA–2009–0050 by any of the following methods:

- *Federal eRulemaking Portal:* Go to *http://www.regulations.gov*. Follow the online instructions for submitting comments.
- *Mail:* Docket Management Facility: U.S. Department of Transportation, 1200 New Jersey Avenue, SE., West Building, Ground Floor, Room W12–140, Washington, DC 20590–0001.
- *Hand Delivery or Courier:* West Building Ground Floor, Room W12–140, 1200 New Jersey Avenue, SE., Washington, DC, between 9 a.m. and 5 p.m. ET, Monday through Friday, except Federal holidays.
- *Fax:* 1–202–493–2251.

Instructions: For detailed instructions on submitting comments and additional information on the rulemaking process, see the Public Participation heading of the **SUPPLEMENTARY INFORMATION** section of this document. Note that all comments received will be posted without change to *http://www.regulations.gov*, including any personal information provided. *Please see* the Privacy Act heading below.

Privacy Act: Anyone is able to search the electronic form of all comments received into any of our dockets by the name of the individual submitting the comment (or signing the comment, if submitted on behalf of an association, business, labor union, etc.). You may review DOT's complete Privacy Act Statement in the **Federal Register** published on April 11, 2000 (65 FR 19477–78) or you may visit *http://DocketInfo.dot.gov*.

Docket: For access to the docket to read background documents or comments received, go to the street address listed above. The Internet access to the docket will be at *http://www.regulations.gov*. Follow the online instructions for accessing the dockets.

FOR FURTHER INFORMATION CONTACT: Carlita Ballard, Office of International Policy, Fuel Economy and Consumer Programs, NHTSA, 1200 New Jersey Avenue, SE., Washington, DC 20590, by electronic mail to *Carlita.Ballard@dot.gov*. Ms. Ballard's telephone number is (202) 366–0846. Her fax number is (202) 493–2990.

SUPPLEMENTARY INFORMATION:

I. Background

Pursuant to 49 U.S.C. 33112, *Insurer reports and information*, NHTSA requires certain passenger motor vehicle insurers to file an annual report with the agency. Each insurer's report includes information about thefts and recoveries of motor vehicles, the rating rules used by the insurer to establish premiums for comprehensive coverage, the actions taken by the insurer to reduce such premiums, and the actions taken by the insurer to reduce or deter theft. Under the agency's regulation, 49 CFR Part 544, the following insurers are subject to the reporting requirements:

(1) Issuers of motor vehicle insurance policies whose total premiums account for 1 percent or more of the total premiums of motor vehicle insurance issued within the United States;

(2) issuers of motor vehicle insurance policies whose premiums account for 10 percent or more of total premiums written within any one state; and

(3) rental and leasing companies with a fleet of 20 or more vehicles not covered by theft insurance policies issued by insurers of motor vehicles, other than any governmental entity.

Pursuant to its statutory exemption authority, the agency exempted certain passenger motor vehicle insurers from the reporting requirements.

A. Small Insurers of Passenger Motor Vehicles

Section 33112(f)(2) provides that the agency shall exempt small insurers of passenger motor vehicles if NHTSA finds that such exemptions will not significantly affect the validity or usefulness of the information in the reports, either nationally or on a state-by-state basis. The term ''small insurer'' is defined, in Section 33112(f)(1)(A) and (B), as an insurer whose premiums for motor vehicle insurance issued directly or through an affiliate, including pooling arrangements established under state law or regulation for the issuance of motor vehicle insurance, account for less than 1 percent of the total premiums for all forms of motor vehicle insurance issued by insurers within the United States. However, that section also stipulates that if an insurance company satisfies this definition of a ''small insurer,'' but accounts for 10 percent or more of the total premiums for all motor vehicle insurance issued in a particular state, the insurer must report about its operations in that state.

In the final rule establishing the insurer reports requirement (52 FR 59; January 2, 1987), 49 CFR Part 544, NHTSA exercised its exemption authority by listing in Appendix A each insurer that must report because it had at least 1 percent of the motor vehicle insurance premiums nationally. Listing the insurers subject to reporting, instead of each insurer exempted from reporting because it had less than 1 percent of the premiums nationally, is administratively simpler since the former group is much smaller than the latter. In Appendix B, NHTSA lists those insurers required to report for particular states because each insurer had a 10 percent or greater market share of motor vehicle premiums in those states. In the January 1987 final rule, the agency stated that it would update Appendices A and B annually. NHTSA updates the appendices based on data voluntarily provided by insurance

companies to A.M. Best.[1] A.M. Best publishes in its *State/Line Report* each spring. The agency uses the data to determine the insurers' market shares nationally and in each state.

B. Self-Insured Rental and Leasing Companies

In addition, upon making certain determinations, NHTSA grants exemptions to self-insurers, i.e., any person who has a fleet of 20 or more motor vehicles (other than any governmental entity) used for rental or lease whose vehicles are not covered by theft insurance policies issued by insurers of passenger motor vehicles, 49 U.S.C. 33112(b)(1) and (f). Under 49 U.S.C. 33112(e)(1) and (2), NHTSA may exempt a self-insurer from reporting, if the agency determines:

(1) The cost of preparing and furnishing such reports is excessive in relation to the size of the business of the insurer; and 33112(e)(1) and (2),

(2) the insurer's report will not significantly contribute to carrying out the purposes of Chapter 331.

In a final rule published June 22, 1990 (55 FR 25606), the agency granted a class exemption to all companies that rent or lease fewer than 50,000 vehicles, because it believed that the largest companies' reports sufficiently represent the theft experience of rental and leasing companies. NHTSA concluded that smaller rental and leasing companies' reports do not significantly contribute to carrying out NHTSA's statutory obligations and that exempting such companies will relieve an unnecessary burden on them. As a result of the June 1990 final rule, the agency added Appendix C, consisting of an annually updated list of the self-insurers subject to Part 544. Following the same approach as in Appendix A, NHTSA included, in Appendix C, each of the self-insurers subject to reporting instead of the self-insurers which are exempted.

NHTSA updates Appendix C based primarily on information from *Automotive Fleet Magazine* and *Auto Rental News*.[2]

C. When a Listed Insurer Must File a Report

Under Part 544, as long as an insurer is listed, it must file reports on or before October 25 of each year. Thus, any insurer listed in the appendices must file a report before October 25, and by each succeeding October 25, absent an amendment removing the insurer's name from the appendices.

II. Proposal

1. Insurers of Passenger Motor Vehicles

Appendix A lists insurers that must report because each had 1 percent of the motor vehicle insurance premiums on a national basis. The list was last amended in a final rule published on August 18, 2008 (73 FR 48151). Based on the 2006 calendar year data market shares from A. M. Best, NHTSA proposes to remove Auto Club Southern California Group and add Auto Club Enterprise Insurance Group to Appendix A.

Each of the 19 insurers listed in Appendix A are required to file a report before October 25, 2009, setting forth the information required by Part 544 for each State in which it did business in the 2006 calendar year. As long as these 19 insurers remain listed, they will be required to submit reports by each subsequent October 25 for the calendar year ending slightly less than 3 years before.

Appendix B lists insurers required to report for particular States for calendar year 2006, because each insurer had a 10 percent or greater market share of motor vehicle premiums in those States. Based on the 2006 calendar year data for market shares from A.M. Best, we propose to remove Farm Bureau of Idaho from Appendix B.

The eight remaining insurers listed in Appendix B are required to report on their calendar year 2006 activities in every State where they had a 10 percent or greater market share. These reports must be filed by October 25, 2009, and set forth the information required by Part 544. As long as these eight insurers remain listed, they would be required to submit reports on or before each subsequent October 25 for the calendar year ending slightly less than 3 years before.

2. Rental and Leasing Companies

Appendix C lists rental and leasing companies required to file reports. Subsequent to publishing the August 18, 2008 final rule (*see* 73 FR 48151), the agency was informed by Emkay, Inc., (Emkay) that it was a motor vehicle leasing company offering financial, fleet management and consulting services pertaining to operating a fleet of motor vehicles and does not provide insurance policies for its customers to purchase. However, Emkay further stated that it does include as a condition of its lease agreement that its lessees purchase and maintain its own motor vehicle insurance coverage. Emkay also submitted a copy of its lease agreement showing that insurance was required as a condition of the lease. Therefore, NHTSA proposes to remove Emkay, Inc. from the list of insurers required to meet the reporting requirements.

Each of the remaining six companies (including franchisees and licensees) listed in Appendix C are required to file reports for calendar year 2006 no later than October 25, 2009, and set forth the information required by Part 544. As long as those six companies remain listed, they would be required to submit reports before each subsequent October 25 for the calendar year ending slightly less than 3 years before.

III. Regulatory Impacts

1. Costs and Other Impacts

This notice has not been reviewed under Executive Order 12866. NHTSA has considered the impact of this proposed rule and determined that the action is not ''significant'' within the meaning of the Department of Transportation's regulatory policies and procedures. This proposed rule implements the agency's policy of ensuring that all insurance companies that are statutorily eligible for exemption from the insurer reporting requirements are in fact exempted from those requirements. Only those companies that are not statutorily eligible for an exemption are required to file reports.

NHTSA does not believe that this proposed rule, reflecting current data, affects the impacts described in the final regulatory evaluation prepared for the final rule establishing Part 544 (52 FR 59; January 2, 1987). Accordingly, a separate regulatory evaluation has not been prepared for this rulemaking action. Using the Bureau of Labor Statistics Consumer Price Index for 2008 (*see http://www.bls.gov/cpi*), the cost estimates in the 1987 final regulatory evaluation were adjusted for inflation. The agency estimates that the cost of compliance is $107,650 for any insurer added to Appendix A, $43,060 for any insurer added to Appendix B, and $12,423 for any insurer added to Appendix C. If this proposed rule is made final, for Appendix A, the agency would propose to remove one company and add one company; for Appendix B, the agency would propose to remove one company; and for Appendix C, the agency would propose to remove one company. The agency estimates that the net effect of this proposal, if made final, would be a cost decrease of

[1] A.M. Best Company is a well-recognized source of insurance company ratings and information. 49 U.S.C. 33112(i) authorizes NHTSA to consult with public and private organizations as necessary.

[2] *Automotive Fleet Magazine and Auto Rental News* are publications that provide information on the size of fleets and market share of rental and leasing companies.

approximately $55,483 to insurers as a group.

Interested persons may wish to examine the 1987 final regulatory evaluation. Copies of that evaluation were placed in Docket No. T86–01; Notice 2. Any interested person may obtain a copy of this evaluation by writing to NHTSA, Technical Reference Division, 1201 New Jersey Avenue, SE., East Building, Ground Floor, Room E12–100, Washington, DC 20590, or by calling (202) 366–2588.

2. Paperwork Reduction Act

The information collection requirements in this proposed rule were submitted to the Office of Management and Budget (OMB) pursuant to the requirements of the Paperwork Reduction Act (44 U.S.C. 3501 *et seq.*). This collection of information is assigned OMB Control Number 2127–0547 (''Insurer Reporting Requirements'').

3. Regulatory Flexibility Act

The agency also considered the effects of this rulemaking under the Regulatory Flexibility Act (RFA) (5 U.S.C. 601 *et seq.*). I certify that this proposed rule will not have a significant economic impact on a substantial number of small entities. The rationale for the certification is that none of the companies proposed for Appendices A, B, or C are construed to be a small entity within the definition of the RFA. ''Small insurer'' is defined, in part under 49 U.S.C. 33112, as any insurer whose premiums for all forms of motor vehicle insurance account for less than 1 percent of the total premiums for all forms of motor vehicle insurance issued by insurers within the United States, or any insurer whose premiums within any State, account for less than 10 percent of the total premiums for all forms of motor vehicle insurance issued by insurers within the State. This notice would exempt all insurers meeting those criteria. Any insurer too large to meet those criteria is not a small entity. In addition, in this rulemaking, the agency proposes to exempt all ''self-insured rental and leasing companies'' that have fleets of fewer than 50,000 vehicles. Any self-insured rental and leasing company too large to meet that criterion is not a small entity.

4. Federalism

This action has been analyzed according to the principles and criteria contained in Executive Order 12612, and it has been determined that the proposed rule does not have sufficient federalism implications to warrant the preparation of a Federalism Assessment.

5. Environmental Impacts

In accordance with the National Environmental Policy Act, NHTSA has considered the environmental impacts of this proposed rule and determined that it would not have a significant impact on the quality of the human environment.

6. Regulation Identifier Number (RIN)

The Department of Transportation assigns a regulation identifier number (RIN) to each regulatory action listed in the Unified Agenda of Federal Regulations. The Regulatory Information Service Center publishes the Unified Agenda in April and October of each year. You may use the RIN contained in the heading, at the beginning, of this document to find this action in the Unified Agenda.

7. Plain Language

Executive Order 12866 and the President's memorandum of June 1, 1998, require each agency to write all rules in plain language. Application of the principles of plain language includes consideration of the following questions:

- Have we organized the material to suit the public's needs?
- Are the requirements in the proposal clearly stated?
- Does the proposal contain technical language or jargon that is not clear?
- Would a different format (grouping and order of sections, use of headings, paragraphing) make the rule easier to understand?
- Would more (but shorter) sections be better?
- Could we improve clarity by adding tables, lists, or diagrams?
- What else could we do to make the proposal easier to understand?

If you have any responses to these questions, you can forward them to me several ways:

a. *Mail:* Carlita Ballard, Office of International Policy, Fuel Economy and Consumer Programs, NHTSA, 1200 New Jersey Avenue, SE., (West Building), Washington, DC 20590;

b. *E-mail: Carlita.Ballard@dot.gov;* or

c. *Fax:* (202) 493–2990.

IV. Comments

Submission of Comments

1. How Can I Influence NHTSA's Thinking on This Proposed Rule?

In developing our rules, NHTSA tries to address the concerns of all our stakeholders. Your comments will help us improve this rule. We invite you to provide views on our proposal, new data, a discussion of the effects of this proposal on you, or other relevant information. We welcome your views on all aspects of this proposed rule. Your comments will be most effective if you follow the suggestions below:

- Explain your views and reasoning clearly.
- Provide solid technical and cost data to support your views.
- If you estimate potential costs, explain how you derived the estimate.
- Provide specific examples to illustrate your concerns.
- Offer specific alternatives.
- Include the name, date, and docket number with your comments.

2. How Do I Prepare and Submit Comments?

Your comments must be written in English. To ensure that your comments are correctly filed in the Docket, please include the docket number of this document in your comments.

Your comments must not exceed 15 pages long (49 CFR 553.21). We established this limit to encourage you to write your primary comments concisely. You may attach necessary documents to your comments. We have no limit on the attachments' length.

Please submit two copies of your comments, including the attachments, to Docket Management at the address given above under **ADDRESSES**.

Comments may also be submitted to the docket electronically by logging onto the Federal eRulemaking Portal Web site at *http:www.regulations.gov*. Follow the online instructions for submitting comments.

3. How Can I Be Sure That My Comments Were Received?

If you wish Docket Management to notify you, upon its receipt of your comments, enclose a self-addressed, stamped postcard in the envelope containing your comments. Upon receiving your comments, Docket Management will mail the postcard.

4. How Do I Submit Confidential Business Information?

If you wish to submit any information under a confidentiality claim, you should submit three copies of your complete submission, including the information you claim as confidential business information, to the Chief Counsel, Office of Chief Counsel, NHTSA, 1200 New Jersey Avenue, SE., West Building, Washington, DC 20590. In addition, you should submit two copies, from which you have deleted the claimed confidential business information, to Docket Management at the address given above under **ADDRESSES**. When you send a comment containing information claimed to be

confidential business information, you should include a cover letter addressing the information specified in our confidential business information regulation (49 CFR Part 512).

5. Will the Agency Consider Late Comments?

NHTSA will consider all comments that Docket Management receives before the close of business on the comment closing date indicated above under **DATES**. To the extent possible, we will also consider comments that Docket Management receives after that date. If Docket Management receives a comment too late for us to consider in developing a final rule (assuming that one is issued), we will consider that comment as an informal suggestion for future rulemaking action.

6. How Can I Read the Comments Submitted by Other People?

You may read the comments received by Docket Management at the address given above under **ADDRESSES**. The hours of the Docket are indicated above, in the same location. You may also see the comments on the Internet. To read the comments on the Internet, log onto the Federal eRulemaking Portal at *http://www.regulations.gov.*

V. Conclusion

Based on the foregoing, we are proposing to amend Appendices A and C of 49 CFR Part 544, Insurer Reporting Requirements. We are also amending § 544.5 to revise the example given the recent update to the reporting requirements.

List of Subjects in 49 CFR Part 544

Crime insurance, Insurance, Insurance companies, Motor vehicles, Reporting and recordkeeping requirements.

In consideration of the foregoing, 49 CFR Part 544 is proposed to be amended as follows:

PART 544—[AMENDED]

1. The authority citation for part 544 continues to read as follows:

Authority: 49 U.S.C. 33112; delegation of authority at 49 CFR 1.50.

2. Paragraph (a) of § 544.5 is revised to read as follows:

§ 544.5 General requirements for reports.

(a) Each insurer to which this part applies shall submit a report annually before October 25, beginning on October 25, 1986. This report shall contain the information required by § 544.6 of this part for the calendar year 3 years previous to the year in which the report is filed (e.g., the report due by October 25, 2009 will contain the required information for the 2006 calendar year).

* * * * *

3. Appendix A to Part 544 is revised to read as follows:

Appendix A—Insurers of Motor Vehicle Insurance Policies Subject to the Reporting Requirements in Each State in Which They Do Business

Allstate Insurance Group
American Family Insurance Group
American International Group
Auto Club Enterprise Insurance Group [1]
Auto-Owners Insurance Group
Erie Insurance Group
Berkshire Hathaway/GEICO Corporation Group
California State Auto Group
Hartford Insurance Group
Liberty Mutual Insurance Companies
Metropolitan Life Auto & Home Group
Mercury General Group
Nationwide Group
Progressive Group
Safeco Insurance Companies
State Farm Group
Travelers Companies
USAA Group
Farmers Insurance Group

[1] Indicates a newly listed company, which must file a report beginning with the report due October 25, 2009.

4. Appendix B to Part 544 is revised to read as follows:

Appendix B—Issuers of Motor Vehicle Insurance Policies Subject to the Reporting Requirements Only in Designated States

Alfa Insurance Group (Alabama)
Auto Club (Michigan)
Commerce Group, Inc. (Massachusetts)
Kentucky Farm Bureau Group (Kentucky)
New Jersey Manufacturers Group (New Jersey)
Safety Group (Massachusetts)
Southern Farm Bureau Group (Arkansas, Mississippi)
Tennessee Farmers Companies (Tennessee)

5. Appendix C to Part 544 is revised to read as follows:

Appendix C—Motor Vehicle Rental and Leasing Companies (Including Licensees and Franchisees) Subject to the Reporting Requirements of Part 544

Cendant Car Rental
Dollar Thrifty Automotive Group
Enterprise Rent-A-Car
Hertz Rent-A-Car Division (subsidiary of The Hertz Corporation)
U-Haul International, Inc. (Subsidiary of AMERCO)
Vanguard Car Rental USA

Issued on: August 11, 2009.

Julie Abraham,

Director, Office of International Policy, Fuel Economy and Consumer Programs.

[FR Doc. E9–19587 Filed 8–14–09; 8:45 am]

BILLING CODE 4910–59–P

Notices

Federal Register

Vol. 74, No. 157

Monday, August 17, 2009

This section of the FEDERAL REGISTER contains documents other than rules or proposed rules that are applicable to the public. Notices of hearings and investigations, committee meetings, agency decisions and rulings, delegations of authority, filing of petitions and applications and agency statements of organization and functions are examples of documents appearing in this section.

DEPARTMENT OF AGRICULTURE

Forest Service

Plumas National Forest; California; Flea Project (Renamed Concow Hazardous Fuels Reduction Project)

AGENCY: Forest Service, USDA.

ACTION: Revised notice of intent to prepare a draft Environmental Impact Statement (EIS).

Introduction: A notice of intent to prepare an EIS for the Flea Project, designed to fulfill the Herger-Feinstein Quincy Library Group Forest Recovery Act of 1988, was published in the **Federal Register** on Thursday, August 30, 2007 (Vol. 72, No. 168, pp. 50096–50098). In June, 2008, a series of lightning strikes ignited numerous forest fires, which over several months merged, burning through the central and eastern portions of the Flea Project Area. This complex of fires, subsequently referred to as the Butte Lightning Complex, dramatically changed the landscape for the long-term. In September 2008, the Feather River Ranger District, of the Plumas National Forest, began the process to determine the scope (the depth and breadth) of the 2008 wildfire disturbance on the environment. At that time, the draft Flea Project EIS was being prepared. In December 2008, after field reconnaissance was completed, the Forest Service, Plumas National Forest, determined to divide the Flea Project Area into two individual management units and projects. The westerly, unburned portion and the fire-damaged, central portion of the Flea Project Area, located alongside communities in the Wildland Urban Interface, to be documented in one EIS. A draft EIS will be prepared with a revised purpose and need; renamed the Concow Hazardous Fuels Reduction Project (the ''Concow Project''). The easterly portion of the Flea Project Area, affected by predominantly low severity wildfire, is to be deferred.

SUMMARY: The USDA, Forest Service, Plumas National Forest will prepare a draft EIS on a proposal to establish, develop and maintain an irregularly shaped network up to ½ mile wide Defensible Fuels Profile Zones (DFPZs) on approximately 1,500 acres of National Forest System Land within the Wildland Urban Interface. The DFPZs would be located both within and west of the 2008 Butte Lightning Complex Fire perimeter, and are designed to improve the capacity of effective, traditional approaches to fire suppression and fire-fighting readiness, consistent with community and private land fuel break efforts. The Concow Project would establish Defensible Fuels Profile Zones to connect existing and proposed federal and private land fuel breaks, and parallel important residential evacuation routes and primary fire suppression access routes for greater community safety.

Within the 8,170 acre Concow Project Area, the 2008 Butte Lightning Complex burned about 6,190 acres. Defensible Fuels Profile Zones located west of the 2008 fire perimeter, in unburned areas, would be established and maintained by reducing hazardous fuels through a combination of silvicultural treatments; thinning-from-below and radial release, with overlapping mastication, chipping, lop and scatter, hand-cutting, hand-piling and pile burning and prescribed underburning treatments. Defensible Fuels Profile Zones located within the 2008 fire perimeter would be developed in burned areas. Initial and maintenance treatments in the burned areas include the removal of dead and dying trees contributing to ladder fuels, with overlapping mastication, chipping, lop and scatter, hand-cutting, hand-piling and pile burning and prescribed underburning of surface fuels treatments, followed by spot tree planting.

DATES: The draft EJS is expected in August 2009. The final EIS is expected in October 2009. A decision is expected in November 2009.

ADDRESSES: Send written comments to Carol Spinos, Interdisciplinary Team Leader, Feather River Ranger District, 875 Mitchell Avenue, Oroville, CA 95965. Comments may be: (1) Mailed; (2) hand delivered between the hours of 8 a.m. to 4:30 p.m. weekdays Pacific Time; (3) faxed to (530) 532–1210; or (4) electronically mailed to: *comments-pacificsouthwest-plumas-featherv r@fs.fed.us.* Please indicate the name ''Concow Hazardous Fuels Reduction Project'' on the subject line of your email. Comments submitted electronically must be in Rich Text Format (.rtf), plain text format (.txt), or Word format (.doc).

FOR FURTHER INFORMATION CONTACT: Carol Spinos, Interdisciplinary Team Leader, Feather River Ranger District, 875 Mitchell Avenue, Oroville, CA 95965. *Telephone:* (530) 534–6500 or *electronic address: cspinos@fs.fed.us.*

SUPPLEMENTARY INFORMATION: The proposed action is designed to meet the standards and guidelines for land management activities in the Plumas National Forest Land and Resource Management Plan (1988), as amended by the Herger-Feinstein Quincy Library Group (HFQLG) Final Supplemental Environmental Impact Statement (FSEIS) and Record of Decision (ROD) (1999, 2003). The HFQLG was legislatively extended from 2009 to 2012, per the Consolidated Appropriations Act (HR 2754), as amended by the Sierra Nevada Forest Plan Amendment FSEIS and ROD (2004). In December 2007, the Consolidated Appropriations Act, 2008 (H.R. 2764), stated that the 2003-adopted Healthy Forests Restoration Act (HFRA: Pub. L. 108–148) applies to HFQLG projects. The Healthy Forests Restoration Act (HFRA) of 2003 (16 U.S.C. at 1611–6591) emphasizes public collaboration processes for developing and implementing hazardous fuel reduction projects on certain types of ''at-risk'' National Forest System Land, and also provides other authorities and direction to help restore healthy forests. The proposed project is located in Butte County, California, within the Feather River Ranger District of the Plumas National Forest. The project is located in all or portions of: Sections 2, 12, 24, T23N, R3E; 6, 18, 30, 32, 34, 36, T23N, R4E; 2, 12, 14, 22, T22N, R4E; Mount Diablo Meridian.

Purpose and Need for Action

The purposes of the project are: (1) Reduce risk to rural communities from high intensity wildfires; (2) establish and maintain Defensive Fuel Profile Zones, linking federal & private land, to further collaborative fire prevention &

suppression efforts to improve the capability to control and contain wildfire; (3) restore recently fire-damaged forests to promote forest health and wildlife habitat diversity; and (4) contribute to the stability and economic health of local communities. The presence of overcrowded forests and fire-damaged vegetation would sustain high intensity fire behavior, in the event of ignition. High concentrations of forest, woody, standing and ground hazardous fuels, particularly adjacent to homes, challenge fire suppression tactics aimed at controlling and containing wildfire. Hazardous fuels need to be removed landlords rearranged to reduce threats to communities at a high risk to destructive wildfire. The 2008 wildfire disturbance has shifted species composition in burned areas, simplifying vegetative structure and reducing age-class diversity. Post-fire re-growth in oak-dominated ecosystems are becoming increasely overcrowded, choking migratory routes, for various wildlife species. Wildfire also destroyed plantations, which are now under-stocked. The project would reduce tree densities in overcrowded forests outside the 2008 Butte Lightning Complex Fire perimeter, to reduce hazardous ladder fuels within ½ mile of the core Wildland Urban Interface. Roadside hazard trees that pose a safety hazard to the public along access routes would also be removed.

Proposed Action

In the unburned areas, the proposed action would develop DFPZs by reducing canopy cover to approximately 40 to 50 percent in the California Wildlife Habitat Relationships (CWHR) system Size Class 4 stands (trees 11–24 inches diameter at breast height [dbh]) and Size Class 5 stands (greater than 24 inches dbh), where canopy cover presently exceeds that amount. Conifers ranging from 9.0 to 29.9 inches dbh would be removed as necessary and processed as sawlogs. Harvested hardwoods less than 6 inches dbh, and conifers 3.0 to 8.9 inches dbh are considered biomass and would be piled and burned or removed from units and processed at appropriate facilities. All trees 30 inches dbh or larger would be retained, unless removal is required for operability (e.g., new skid trails, landings, or temporary roads). Residual spacing of conifers would be a mosaic of even and clumpy spacing depending on the characteristics of each stand prior to implementation. CWHR Size Class 3 stands (averaging 6–11 inches dbh) and plantations would not have any canopy cover restrictions and would be thinned to residual spacing of approximately 18 to 22 feet (25 percent), depending on average residual tree size and forest health conditions, to allow retention of the healthiest, largest, and tallest conifers and black oaks. Radial thinning or release will occur around large diameter black oak and the healthiest growing sugar pine, or ponderosa pine >24 inches in diameter on a per acre basis. Radial thinning would correlate to tree DBH. All mechanized thinning and biomass removal in DFPZ units would be conducted with feller buncher equipment. Shrubs would be masticated, as would trees less than 9 inches dbh unless needed for proper canopy cover and spacing. Hand cutting and pile burning would be used to reduce fuels in Riparian Habitat Conservation Areas (RHCAs) and other areas where mechanical equipment is not allowed. Equipment restriction zone widths within RHCAs would range from 25–150 feet, depending on environmental conditions.

In burned areas, snags would be retained in snag retention areas. In treatment areas, snag retention will average 2–4 snags per acre. Outside of fuels reduction areas, comprising over 60% of the Concow Project Area, all snags will be retained. Dead trees with commercial value greater than 20 inches in diameter in excess of wildlife needs will be removed utilizing helicopter and/or ground based logging systems. In units with limited accessibility, trees up to 19.9 inches will be masticated. Dead non-merchantable trees 12 to 19.9 inches will be removed and disposed of by chipping, incineration or removal as fire wood. Fire-injured trees may be removed in order to meet post-fire fuels and operational objectives. Shrubs would be masticated, as would trees up to 12 inches in diameter. Black oak stump sprouts will be left untreated at an approximate spacing of 18–25 feet, with mastication in between. Approximately 30 acres would be required for landing activities. No new road construction would be required. About 200 acres would be reforested with conifer seedlings in widely spaced clusters to emulate a naturally established forest. The areas would be reforested with a mixture of native species. In both burned and unburned areas, manual cutting of: (1) Shrubs; (2) trees 1 to 9 inches dbh; and/or (3) thinning aggregations of 1 to 9 inches dbh conifers or plantation trees would occur. Follow-up DFPZ maintenance may occur in year 4 or 5 and 9 or 10 post initial treatments.

Possible Alternatives

In addition to the proposed action, two other alternatives would be analyzed, a no action alternative (alternative A), and an action alternative consistent with the 2001 SNFPA ROD (alternative C).

Lead and Cooperating Agencies

The USDA, Forest Service is the lead agency for this proposal. The USDI, Bureau of Land Management is a cooperating agency for the purpose of this EIS.

Responsible Official

Karen L. Hayden, Plumas National Forest, Feather River District Ranger, 875 Mitchell Avenue, Oroville CA 95965.

Nature of Decision To Be Made

The decision to be made is whether to: (1) Implement the proposed action; (2) meet the purpose and need for action through some other combination of activities; or, (3) take no action at this time.

Scoping Process

Scoping is conducted to determine the significant issues that will be addressed during the environmental analysis. Comments that were received during Scoping for the Flea Project will be considered in the combined analysis. Scoping comments will be most helpful if received by September 1, 2009. A presentation of the Concow Project is scheduled for August 1, 2008 at the Community Wildfire Workshop to be held at the Yankee Hill Grange located at 4122 Big Bend Road, Yankee Hill, California 95965.

Permits or Licenses Required

An Air Pollution Permit and a Smoke Management Plan are required by local agencies.

Early Notice of Importance of Public Participation in Subsequent Environmental Review

A draft EIS will be prepared for comment. The comment period on the draft EIS will be 45 days from the date the Environmental Protection Agency publishes the notice of availability in the **Federal Register**.

The Forest Service believes, at this early stage, it is important to give reviewers notice of several court rulings related to public participation in the environmental review process. First, reviewers of draft EISs must structure their participation in the environmental review of the proposal so that it is meaningful and alerts an agency to the reviewer's position and contentions,

Vermont Yankee Nuclear Power Corp. v. *NRDC,* 435 U.S. 519, 553 (1978). Also, environmental objections that could be raised at the draft EIS stage, but that are not raised until after completion of the final EIS, may be waived or dismissed by the courts. *City of Angoon* v. *Hodel,* 803 F.2d 1016, 1022 (9th Cir. 1986) and *Wisconsin Heritages, Inc.* v. *Harris,* 490 F. Supp. 1334, 1338 (E.D. Wis. 1980). Because of these court rulings, it is very important that those interested in this proposed action participate by the close of the 45 day comment period so that comments and objections are made available to the Forest Service at a time when it can meaningfully consider them and respond to them in the final EIS.

To assist the Forest Service in identifying and considering issues and concerns on the proposed action, comments on the draft EIS should be as specific as possible. It is also helpful if comments refer to specific pages or chapters of the draft EIS. Comments may also address the adequacy of the draft EIS or the merits of the alternatives formulated and discussed in the statement. Reviewers may wish to refer to the Council on Environmental Quality Regulations for implementing the procedural provisions of the National Environmental Policy Act at 40 CFR 1503.3 in addressing these points.

Comments received, including the names and addresses of those who comment, will be considered part of the public record on this proposal and will be available for public inspection.

(Authority: 40 CFR 1501.7 and 1508.22; Forest Service Handbook 1909.15, Section 21)

Dated: July 8, 2009.

Karen L. Hayden,

Feather River District Ranger.

[FR Doc. E9–19371 Filed 8–14–09; 8:45 am]

BILLING CODE M

DEPARTMENT OF AGRICULTURE

Animal and Plant Health Inspection Service

[Docket No. APHIS–2009–0066]

Wood Packaging Material Used in Domestic Commerce; Pest Mitigation Relating to Firewood Movement; Public Meetings

AGENCY: Animal and Plant Health Inspection Service, USDA.

ACTION: Notice of public meetings.

SUMMARY: This is a notice to inform the public of four upcoming meetings to discuss mitigation measures that could be applied to wood packaging material (e.g., crates, dunnage, wooden spools, pallets, packing blocks) used in domestic commerce to decrease the risk of the artificial spread of plant pests such as the emerald ash borer and the Asian longhorned beetle. These and other plant pests that could be transported interstate by wood packaging material pose a serious threat to U.S. agriculture and to natural, cultivated, and urban forests. We will also be holding a meeting in order to solicit public comments and ideas concerning potential strategies for mitigating the risk of artificial spread of plant pests via the movement of firewood.

DATES: The meetings concerning wood packaging material will be held on August 27, 2009, in Washington, DC; on September 2, 2009, in Portland, OR; on September 15, 2009, in Houston, TX; and on September 29, 2009, in Grand Rapids, MI. The meetings in each location will be held from 9 a.m. to noon. Registration will be from 8 a.m. to 9 a.m. for each meeting.

The meeting concerning the creation of a Federal firewood strategy will be held on August 27, 2009, from 1 p.m. to 4 p.m. in Washington, DC. Registration will be from 12 noon to 1 p.m.

ADDRESSES: The public meetings regarding wood packaging material and the creation of a Federal firewood strategy will be held in Washington, DC. in the Jefferson Auditorium at the USDA South Building, 1400 Independence Avenue, SW., Washington, DC. The remaining meetings regarding wood packaging material will be held at the following locations:

- Portland, OR. The Embassy Suites Hotel, 319 SW Pine Street, Portland, OR.
- Houston, TX. The Crowne Plaza Houston I–10 West, 14703 Park Row, Houston, TX.
- Grand Rapids, MI. The Amway Grand Plaza Hotel, 187 Monroe Avenue, NW., Grand Rapids, MI.

FOR FURTHER INFORMATION CONTACT: Mr. Paul Chaloux, National Emerald Ash Borer Program Manager, PPQ, APHIS, 4700 River Road Unit 137, Riverdale, MD 20737–1236; (301) 734–0917.

SUPPLEMENTARY INFORMATION:

Domestic Wood Packaging Material Public Meetings

As part of its ongoing efforts to safeguard plant health, the U.S. Department of Agriculture (USDA) is considering options for strengthening our response to the risks of the artificial spread of plant pests such as the pine shoot beetle *Tomicus piniperda* (Scolytidae) and the Asian longhorned beetle *Anaplophora glabripennis* (Cerambycidae) that are associated with the interstate movement of wood packaging material (WPM).

In order to provide individuals and organizations an opportunity to discuss options for strengthening our response to the risks associated with the interstate movement of WPM, the potential impacts of increased use of alternative packaging materials, the environmental issues relating to these options, and any other topics of concern, we plan to hold several public meetings. Our goal is to gather feedback and input from a wide range of stakeholders to assist us in making an informed decision regarding our objectives and direction in relation to the interstate movement of WPM. Topics for discussion at each meeting will include, but not necessarily be limited to, the following:

- *Pest risks.* What is the magnitude of the pest risks associated with WPM moving interstate? What treatments or other measures would be effective in reducing pest risks associated with WPM moving interstate and to what degree would these risks be reduced by these approaches?
- *Compliance.* Would responsibility lie with the manufacturer, end user, shipper, or elsewhere for ensuring that WPM meets any standards that might be developed? How could APHIS best monitor compliance with any such standards? If treatment of some kind were required for all WPM moving interstate, would a phase-in period be required, and if so, how long should this period last?
- *Alternative materials.* To what extent could alternative packing materials (processed wood packaging materials, plastic packing materials, or other alternatives) be substituted for WPM in interstate commerce? What would the environmental, economic, and other impacts be of any such substitution?
- *Environmental impacts.* What would the environmental impacts be if treatment or other measures were required for WPM moving interstate?
- *Cost.* What would the economic impacts be if treatment or other measures were required for WPM moving interstate?

Federal Firewood Strategy Public Meeting

In addition, we are seeking suggestions from the public regarding the creation of a Federal firewood strategy in order to better mitigate the pest risks associated with the movement of firewood within the United States. Specifically, we are seeking any potential strategies that may be used to

control the movement of invasive plant pests via the movement of firewood. There are many potential approaches to addressing this issue, including voluntary, regulatory, and outreach-based programs.

On-site registration will begin at 8 a.m. on the day of each meeting concerning wood packaging material and at noon for the meeting concerning Federal firewood strategy. All participants must register on the day of the meeting. If you require special accommodations, such as a sign language interpreter, or if you have any questions regarding the meetings, please call or write the person listed under **FOR FURTHER INFORMATION CONTACT**.

Persons attending the August 27, 2009, meetings in Washington, DC, will be required to sign in at the entrance to the USDA South Building located at 14th Street and Independence Avenue, entering through Wing 7. Photo identification is required to gain access to the building. The nearest Metro station is the Smithsonian station on the Blue/Orange Lines, which is within walking distance.

Done in Washington, DC, this 11th day of August 2009.

William H. Clay,

Acting Administrator, Animal and Plant Health Inspection Service.

[FR Doc. E9–19643 Filed 8–14–09; 8:45 am]

BILLING CODE 3410–34–P

DEPARTMENT OF AGRICULTURE

Forest Service

Ravalli County Resource Advisory Committee

AGENCY: Forest Service, USDA.

ACTION: Notice of meeting.

SUMMARY: The Ravalli County Resource Advisory Committee will be meeting to assign monitors on 2008 projects and hold a short public forum (question and answer session). The meeting is being held pursuant to the authorities in the Federal Advisory Committee Act (Pub. L. 106–393) and under the Secure Rural Schools and Community Self-Determination Act of 2000 (Pub. L. 106–393). The meeting is open to the public.

DATES: The meeting will be held on August 25, 2009, 6:30 p.m.

ADDRESSES: The meeting will be held at the Bitterroot National Forest, Supervisor Office, 1801 N First Street, Hamilton, Montana. Send written comments to Daniel G Ritter, District Ranger, Stevensville Ranger District, 88 Main Street, Stevensville, MT 59870, by facsimile (406) 777–7423, or electronically to *dritter@fs.fed.us.*

FOR FURTHER INFORMATION CONTACT: Daniel Ritter, Stevensville District Ranger and Designated Federal Officer, Phone: (406) 777–5461.

Dated: August 5, 2009.

David T. Bull,

Forest Supervisor.

[FR Doc. E9–19496 Filed 8–14–09; 8:45 am]

BILLING CODE M

DEPARTMENT OF COMMERCE

Submission for OMB Review; Comment Request

The Department of Commerce will submit to the Office of Management and Budget (OMB) for clearance the following proposal for collection of information under the provisions of the Paperwork Reduction Act (44 U.S.C. chapter 35).

Agency: U.S. Census Bureau.

Title: Service Annual Survey.

Form Number(s): SA–22T thru SA–813 (81 forms total).

OMB Control Number: 0607–0422.

Type of Request: Revision of a currently approved collection.

Burden Hours: 271,284.

Number of Respondents: 78,730.

Average Hours Per Response: 3 hours and 27 minutes.

Needs and Uses: The U.S. Census Bureau requests an extension with revision of the current OMB approval of the Service Annual Survey (SAS). Today, over 50 percent of all economic activity is accounted for by services that are narrowly defined to exclude retail and wholesale trade. The U.S. Census Bureau currently measures the total output of most of these service industries annually in its Service Annual Survey. This survey currently covers all or some of: Transportation and Warehousing; Information; Finance and Insurance; Real Estate and Rental and Leasing; Professional, Scientific, and Technical Services; Administration and Support and Waste Management and Remediation Services; Health Care and Social Assistance; Arts, Entertainment, and Recreation; and Other Services. The survey will expand to cover two new sectors, Utilities and Educational Services, and all industries within the sectors mentioned above.

Data from the SAS are essential to a better understanding and higher quality estimates of economic growth, real output, prices, and productivity for our nation's economy. A broad spectrum of government and private stakeholders use these data in analyzing business and economic sectors; developing statistics on services; forecasting economic growth; and compiling data on productivity, prices and gross domestic product (GDP). In addition, trade and professional organizations use these data to analyze industry trends, benchmark their own statistical programs and develop forecasts. Private businesses use these data to measure market share, analyze business potential and plan investments. Comprehensive, comparative annual data on the services sector are not available from any other source.

Annually, the SAS collects total revenue, total expenses, and general expense detail items. Some sectors also collect revenue detail items that are specific to a particular industry. The availability of these data greatly improve the quality of the intermediate-inputs and value-added estimates in BEA's annual input-output and GDP by industry accounts.

The data produced in the SAS are critical to the accurate measurement of total economic activity. The Bureau of Economic Analysis (BEA), the primary Federal user, uses the information to develop the national income and product accounts, compile benchmark and annual input-output tables, and compute GDP by industry. The Bureau of Labor Statistics (BLS) uses these data as inputs to its Producer Price Indexes and in developing productivity measurements. The Centers for Medicare and Medicaid Services (CMS) use the data for program planning and development of the National Health Expenditure Accounts. The Federal Communications Commission (FCC) uses these data to assess the impact of regulatory policies. International agencies use the data to compare total domestic output to changing international activity. Private industry also uses these data as a tool for marketing analysis.

Affected Public: Business or other for-profit; not-for-profit institutions.

Frequency: Annually.

Respondent's Obligation: Mandatory.

Legal Authority: Title 13, United States Code, sections 182, 224 and 225.

OMB Desk Officer: Brian Harris-Kojetin, (202) 395–7314.

Copies of the above information collection proposal can be obtained by calling or writing Diana Hynek, Departmental Paperwork Clearance Officer, (202) 482–0266, Department of Commerce, Room 7845, 14th and Constitution Avenue, NW., Washington, DC 20230 (or via the Internet at *dhynek@doc.gov*).

Written comments and recommendations for the proposed

information collection should be sent within 30 days of publication of this notice to Brian Harris-Kojetin, OMB Desk Officer either by fax (202–395–7245) or e-mail (*bharrisk@omb.eop.gov*).

Dated: August 11, 2009.

Glenna Mickelson,

Management Analyst, Office of the Chief Information Officer.

[FR Doc. E9–19580 Filed 8–14–09; 8:45 am]

BILLING CODE 3510–07–P

DEPARTMENT OF COMMERCE

Department of Commerce: Industry Outreach in Milwaukee, Wisconsin, for Climate Change Negotiations Under the UNFCCC

AGENCY: International Trade Administration, Department of Commerce.

ACTION: Notice of meeting.

SUMMARY: The U.S. Department of Commerce (DOC) will host a half-day roundtable for industry participants on August 25, 2009, in Milwaukee, Wisconsin, during which senior U.S. government officials will outline the draft negotiation text of a new agreement under the United Nations Framework Convention on Climate Change (UNFCCC), provide updates on recent developments, and solicit individual input from participants. The purpose of the industry roundtable is to allow private sector stakeholders, particularly industry and trade associations, to advise U.S. officials on the impact a new UNFCCC agreement could have on their respective operations and on associated commercial opportunities. The DOC anticipates additional outreach events will be held throughout the United States.

DATES: August 25, 2009.

ADDRESSES: To participate in the roundtable, please register via the Internet at: *http://bec.msoe.edu/course_descriptions/WPCLIM.php.* For questions or problems with Internet registration, please contact Paul D. Churchill, Director, Milwaukee U.S. Export Assistance Center, 1025 North Broadway, R01, Milwaukee, WI 53202; (414) 297–3473; *Paul.Churchill@mail.doc.gov*.

SUPPLEMENTARY INFORMATION:

Participation

Any private sector participant may register to attend; space is limited. Participants who are unable to attend the event can call into a conference line to participate. To get the audio conference call-in information, please e-mail *bec@msoe.edu* and put ''BEC Audio Recording'' in the subject line.

The United Nations Framework Convention on Climate Change—The UNFCCC was signed in 1992 in Rio de Janeiro, Brazil, and entered into force on March 21, 1994. Currently, 192 states have ratified the Convention, including the United States. The treaty requires national inventories of greenhouse gas emissions from developed countries, and encourages national action to stem greenhouse gas emissions and slow climate change. Developed nations also pledge to share technology and resources with developing nations.

Kyoto Protocol to the United Nations Framework Convention on Climate Change—The Kyoto Protocol was adopted in December 1997, entered into force on February 16, 2005, and has been ratified by 184 countries and the European Community. While the United States signed the document, the U.S. Senate has never ratified the treaty. The Kyoto Protocol sets binding emissions targets for 37 industrialized countries, includes mechanisms for measuring and reporting emissions, and provides for financing and technology assistance to developing countries. The Protocol will expire at the end of 2012.

Current UNFCCC Negotiations—Negotiations under the UNFCCC are underway to formulate a successor agreement to the Kyoto Protocol. The discussions have the goal of concluding an agreement in Copenhagen this December. Potential impacts on U.S. industrial competitiveness will be discussed during the upcoming roundtable, including technology transfer, intellectual property, financing, and related commercial opportunities.

Dated: August 10, 2009.

Man Cho,

Energy Team Leader, Office of Energy and Environmental Industries, U.S. Department of Commerce.

[FR Doc. E9–19588 Filed 8–14–09; 8:45 am]

BILLING CODE 3510–DR–P

DEPARTMENT OF COMMERCE

Department of Commerce: Environmental Industry Innovation Event

AGENCY: International Trade Administration, Department of Commerce.

ACTION: Notice of meeting.

SUMMARY: The U.S. Department of Commerce (DOC) will host a two-hour event in Washington, DC at Department of Commerce headquarters for U.S. government officials and industry participants which will feature examples of new environmental products and services. The purpose of the event is to highlight creativity and innovation in environmental technologies, discuss their importance to the sector, and identify potential policy interactions. The event is called ''The New Environmental Industry—New Entrants and Innovation Broaden the Business of Environmental Protection.''

DATES: September 29, 2009; Washington, DC; U.S. Department of Commerce, 14th & Constitution Avenue, NW., Washington, DC 20230; 2 p.m.–4 p.m.

ADDRESSES: To register to attend the event, please e-mail your name, organization, title, and contact information to *newenvind@mail.doc.gov*. For questions, please contact Marc Lemmond, Office of Energy and Environmental Industries, Room 4053, U.S. Department of Commerce, 14th & Constitution Avenue, NW., Washington, DC 20230; 202–482–3889; *marc.lemmond@mail.doc.gov*.

SUPPLEMENTARY INFORMATION:

Selection Criteria

The Department invites registrations from interested representatives of the U.S. government, relevant trade associations, and private sector companies.

As industry continues to seek solutions to current environmental issues such as climate change, clean air, and growing water scarcity, U.S. companies from across the industrial spectrum are creating new environmental products and services. Come hear some of the surprising sources of this innovation and discuss potential policy interactions.

Cheryl McQueen,

Acting Director, Office of Energy and Environmental Industries, U.S. Department of Commerce.

[FR Doc. E9–19586 Filed 8–14–09; 8:45 am]

BILLING CODE 3510–DR–P

DEPARTMENT OF COMMERCE

National Institute of Standards and Technology

Proposed Information Collection; Comment Request; Hollings Manufacturing Extension Partnership (HMEP) Program Application Requirements

AGENCY: National Institute of Standards and Technology (NIST), Commerce.

ACTION: Notice.

SUMMARY: The Department of Commerce, as part of its continuing effort to reduce paperwork and respondent burden, invites the general public and other Federal agencies to take this opportunity to comment on proposed and/or continuing information collections, as required by the Paperwork Reduction Act of 1995.

DATES: Written comments must be submitted on or before October 16, 2009.

ADDRESSES: Direct all written comments to Diana Hynek, Departmental Paperwork Clearance Officer, Department of Commerce, Room 7845, 14th and Constitution Avenue, NW., Washington, DC 20230 (or via the Internet at *dHynek@doc.gov).*

FOR FURTHER INFORMATION CONTACT: Requests for additional information or copies of the information collection instrument and instructions should be directed to Diane Henderson at (301) 975–5105 or by e-mail at *Diane.Henderson@nist.gov*.

SUPPLEMENTARY INFORMATION:

I. Abstract

The objective of NIST Hollings Manufacturing Extension Partnership Program (HMEP) is to enhance productivity, technological performance, and strengthen the global competitiveness of small- and medium-sized U.S.-based manufacturing firms. Rather than creating products, services, and programs from scratch, HMEP works with partners to leverage resources and bring those resources to manufacturing clients. The nationwide network, with its direct reach to the nation's manufacturers, has proven to be invaluable to numerous Federal government partners who utilize the network to distribute valuable, cutting-edge information and resources.

This request is for the information collection requirements associated with submission of grant proposals for NIST HMEP funding. The intent of the collection is to meet statutory requirements for NIST HMEP, as well as compliance with 15 U.S.C. 278k, as implemented in 15 CFR part 290.

The manufacturing extension centers (MECs) are part of the HMEP national system of extension service providers. Currently, the HMEP national system consists of over 400 centers and field offices located throughout the United States and Puerto Rico. The information regarding HMEP and the MECs is provided in the information packet that can be obtained as explained above or on-line at *http://www.mep.nist.gov*.

The focus of a center is to provide those manufacturing extension services required by the small- and medium-sized manufacturers in its service region utilizing the most cost-effective, local, leveraged resources for those services. It is not the intent of this program that the centers perform research and development.

II. Method of Collection

Paper or electronically via *http://www.grants.gov*.

III. Data

OMB Control Number: None.
Form Number: None.
Type of Review: Regular submission.
Affected Public: Not-for-profit institutions or organizations, including universities, State and local governments, and consortia of not-for-profit institutions.
Estimated Number of Respondents: 12.
Estimated Time per Response: 112 hours.
Estimated Total Annual Burden Hours: 448.
Estimated Total Annual Cost to Public: $100.

IV. Request for Comments

Comments are invited on: (a) Whether the proposed collection of information is necessary for the proper performance of the functions of the agency, including whether the information shall have practical utility; (b) the accuracy of the agency's estimate of the burden (including hours and cost) of the proposed collection of information; (c) ways to enhance the quality, utility, and clarity of the information to be collected; and (d) ways to minimize the burden of the collection of information on respondents, including through the use of automated collection techniques or other forms of information technology.

Comments submitted in response to this notice will be summarized and/or included in the request for OMB approval of this information collection; they also will become a matter of public record.

Dated: August 11, 2009.

Gwellnar Banks,

Management Analyst, Office of the Chief Information Officer.

[FR Doc. E9–19576 Filed 8–14–09; 8:45 am]

BILLING CODE 3510–13–P

DEPARTMENT OF COMMERCE

National Institute of Standards and Technology

Proposed Information Collection; Comment Request; National Voluntary Laboratory Accreditation Program (NVLAP) Information Collection System

AGENCY: National Institute of Standards and Technology (NIST).

ACTION: Notice.

SUMMARY: The Department of Commerce, as part of its continuing effort to reduce paperwork and respondent burden, invites the general public and other Federal agencies to take this opportunity to comment on proposed and/or continuing information collections, as required by the Paperwork Reduction Act of 1995.

DATES: Written comments must be submitted on or before October 16, 2009.

ADDRESSES: Direct all written comments to Diana Hynek, Departmental Paperwork Clearance Officer, Department of Commerce, Room 6625, 14th and Constitution Avenue, NW., Washington, DC 20230 (or via the Internet at *dHynek@doc.gov*).

FOR FURTHER INFORMATION CONTACT: Requests for additional information or copies of the information collection instrument and instructions should be directed to the attention of Vanda R. White, National Voluntary Laboratory Accreditation Program, National Institute of Standards and Technology, 100 Bureau Drive, Stop 2140, Gaithersburg, MD 20899–2140; phone: (301) 975–3592; e-mail: *vanda.white@nist.gov.*

SUPPLEMENTARY INFORMATION:

I. Abstract

This information is collected from all testing or calibration laboratories that apply for NVLAP accreditation. The applicants provide the minimum information necessary for NVLAP to evaluate the competency of laboratories to carry out specific tests or calibrations or types of tests or calibrations. The applicant provides such information as name, address, phone and fax numbers, and contact person, and selects the test

methods or parameters for which the laboratory is seeking accreditation. The application must be signed by the Authorized Representative of the laboratory, who commits the laboratory to comply with NVLAP's accreditation requirements. The information collection is mandated by 15 CFR 285.

II. Method of Collection

An application for accreditation is provided to each new or renewal applicant laboratory and can be submitted to NVLAP either electronically or by mail.

III. Data

OMB Control Number: 0693–0003.

Form Number: None.

Type of Review: Regular submission.

Affected Public: Business or other for-profit organizations; not-for-profit institutions; and Federal, State or local government.

Estimated Number of Respondents: 850.

Estimated Time per Response: 2 hours and 30 minutes.

Estimated Total Annual Burden Hours: 2,125.

Estimated Total Annual Cost to Public: $0.

IV. Request for Comments

Comments are invited on: (a) Whether the proposed collection of information is necessary for the proper performance of the functions of the agency, including whether the information shall have practical utility; (b) the accuracy of the agency's estimate of the burden (including hours and cost) of the proposed collection of information; (c) ways to enhance the quality, utility, and clarity of the information to be collected; and (d) ways to minimize the burden of the collection of information on respondents, including through the use of automated collection techniques or other forms of information technology.

Comments submitted in response to this notice will be summarized and/or included in the request for OMB approval of this information collection; they also will become a matter of public record.

Dated: August 11, 2009.

Gwellnar Banks,

Management Analyst, Office of the Chief Information Officer.

[FR Doc. E9–19581 Filed 8–14–09; 8:45 am]

BILLING CODE 3510–13–P

DEPARTMENT OF COMMERCE

Foreign–Trade Zones Board

[Order No. 1636]

Approval for Expanded Manufacturing Authority, Foreign–Trade Subzone 124E, Marathon Petroleum Company LLC (Oil Refinery), Garyville, Louisiana

Pursuant to its authority under the Foreign–Trade Zones Act of June 18, 1934, as amended (19 U.S.C. 81a–81u), the Foreign–Trade Zones Board (the Board) adopts the following Order:

Whereas, the Port of South Louisiana, grantee of Foreign–Trade Zone 124, has requested authority on behalf of Marathon Petroleum Company LLC (Marathon), to expand the scope of manufacturing activity conducted under zone procedures within Subzone 124E at the Marathon facility in Garyville, Louisiana, (FTZ Docket 3–2009, filed 2/3/2009);

Whereas, notice inviting public comment has been given in the **Federal Register** (74 FR 6569–6570, 2/10/09) and the application has been processed pursuant to the FTZ Act and the Board's regulations; and,

Whereas, the Board adopts the findings and recommendations of the examiner's report, and finds that the requirements of the FTZ Act and Board's regulations would be satisfied, and that the proposal would be in the public interest if subject to the restrictions listed below;

Now, therefore, the Board hereby orders:

The application to expand the scope of manufacturing authority under zone procedures within Subzone 124E, as described in the application and **Federal Register** notice, is approved, subject to the FTZ Act and the Board's regulations, including Section 400.28, and further subject to the following conditions:

1. Foreign status (19 CFR §§ 146.41, 146.42) products consumed as fuel for the refinery shall be subject to the applicable duty rate.
2. Privileged foreign status (19 CFR § 146.41) shall be elected on all foreign merchandise admitted to the subzone, except that non–privileged foreign (NPF) status (19 CFR § 146.42) may be elected on refinery inputs covered under HTSUS Subheadings #2709.00.10, #2709.00.20, #2710.11.25, #2710.11.45, #2710.19.05, #2710.19.10, #2710.19.45, #2710.91.00, #2710.99.05, #2710.99.10, #2710.99.16, #2710.99.21 and #2710.99.45 which are used in the production of:
   - petrochemical feedstocks and refinery by–products (examiner's report, Appendix ''C'');
   - products for export;
   - and, products eligible for entry under HTSUS #9808.00.30 and #9808.00.40 (U.S. Government purchases).

Signed at Washington, DC, this 5th day of August 2009.

Ronald K. Lorentzen,

Acting Assistant Secretary of Commerce for Import Administration, Alternate Chairman, Foreign–Trade Zones Board.

Attest:

Andrew McGilvray,

Executive Secretary.

[FR Doc. E9–19670 Filed 8–14–09; 8:45 am]

BILLING CODE 3510–DS–S

DEPARTMENT OF COMMERCE

Foreign–Trade Zones Board

[Order No. 1635]

Approval for Manufacturing Authority, Foreign–Trade Zone 122, Excalibar Minerals, LLC (Barite Milling), Corpus Christi, Texas

Pursuant to its authority under the Foreign–Trade Zones Act of June 18, 1934, as amended (19 U.S.C. 81a–81u), the Foreign–Trade Zones Board (the Board) adopts the following Order:

Whereas, the Port of Corpus Christi Authority, grantee of Foreign–Trade Zone 122, has requested manufacturing authority on behalf of Excalibar Minerals, LLC (Excalibar), within FTZ 122 in Corpus Christi, Texas, (FTZ Docket 2–2009, filed 01/29/2009);

Whereas, notice inviting public comment has been given in the **Federal Register** (74 FR 6134, 02/05/2009) and the application has been processed pursuant to the FTZ Act and the Board's regulations; and,

Whereas, the Board adopts the findings and recommendations of the examiner's report, and finds that the requirements of the FTZ Act and Board's regulations are satisfied, and that the proposal is in the public interest;

Now, therefore, the Board hereby orders:

The application for manufacturing authority under zone procedures within FTZ 122 on behalf of Excalibar, as described in the application and **Federal Register** notice, is approved, subject to the FTZ Act and the Board's regulations, including Section 400.28.

Signed at Washington, DC, this 5th day of August 2009.

Ronald K. Lorentzen,

Acting Assistant Secretary of Commerce for Import Administration, Alternate Chairman, Foreign–Trade Zones Board.

Attest:

Andrew McGilvray,

Executive Secretary.

[FR Doc. E9–19667 Filed 8–14–09; 8:45 am]

BILLING CODE 3510–DS–S

DEPARTMENT OF COMMERCE

Foreign–Trade Zones Board

[Order No. 1639]

Approval for Manufacturing Authority, CNH America, LLC (Construction and Agricultural Equipment), Fargo, North Dakota

Pursuant to its authority under the Foreign–Trade Zones Act of June 18, 1934, as amended (19 U.S.C. 81a–81u), the Foreign–Trade Zones Board (the Board) adopts the following Order:

Whereas, the Fargo Municipal Airport Authority, grantee of FTZ 267, has requested manufacturing authority within FTZ 267 -- Site 2, in Fargo, North Dakota (FTZ Docket 60–2008, filed October 23, 2008 and amended April 17, 2009);

Whereas, notice inviting public comment has been given in the **Federal Register** (73 FR 68406, 11–18–2008; amended 74 FR 19041–19042, 04–27–2009); and,

Whereas, the Board adopts the findings and recommendations of the examiner's report, and finds that the requirements of the FTZ Act and the Board's regulations are satisfied, and that approval of the application, as amended, is in the public interest;

Now, therefore, the Board hereby grants authority for the manufacture of construction and agricultural equipment within FTZ 267 on behalf of CNH America, LLC, as described in the amended application and **Federal Register** notices, subject to the FTZ Act and the Board's regulations, including Section 400.28.

Signed at Washington, DC, this 5th day of August 2009.

Ronald K. Lorentzen,

Acting Assistant Secretary of Commerce for Import Administration, Alternate Chairman, Foreign–Trade Zones Board.

Attest:

Andrew McGilvray,

Executive Secretary.

[FR Doc. E9–19674 Filed 8–14–09; 8:45 am]

BILLING CODE 3510–DS–S

DEPARTMENT OF COMMERCE

National Oceanic and Atmospheric Administration

RIN 0648–XQ96

Endangered and Threatened Species; Take of Anadromous Fish

AGENCY: National Marine Fisheries Service (NMFS), National Oceanic and Atmospheric Administration (NOAA), Commerce.

ACTION: Receipt of an application for a scientific research permit; request for comments.

SUMMARY: Notice is hereby given that NMFS has received an application for a scientific research permit from Dr. Jerry J. Smith (14516). This document serves to notify the public of the availability of the permit application for review and comment.

DATES: Written comments on the permit application must be received no later than 5 p.m. Pacific Standard Time on September 16, 2009.

ADDRESSES: The application and related documents are available for review by selecting ''Records Open for Public Comment'' from the Features box on the Applications and Permits for Protected Species (APPS) home page, *https://apps.nmfs.noaa.gov*, and then selecting File No. 14516 from the list of available applications.

These documents are also available upon written request or by appointment, for Permit 14516: Protected Resources Division, NMFS, 777 Sonoma Avenue, Room 315, Santa Rosa, CA 95404 ph: (707) 575–6097, fax: (707) 578–3435).

Written comments on this application should be submitted to the address listed above. Comments may also be submitted by facsimile to (707) 578–3435, or by email to *FRNpermits.SR@noaa.gov*. Please include File No. 14516 in the subject line of the email comment.

FOR FURTHER INFORMATION CONTACT: Jeffrey Jahn at phone number (707) 575–6097, or e-mail: *Jeffrey.Jahn@noaa.gov*.

SUPPLEMENTARY INFORMATION:

Authority

Issuance of permits and permit modifications, as required by the Endangered Species Act of 1973 (16 U.S.C. 1531–1543) (ESA), is based on a finding that such permits/modifications: (1) are applied for in good faith; (2) would not operate to the disadvantage of the listed species which are the subject of the permits; and (3) are consistent with the purposes and policies set forth in section 2 of the ESA. Authority to take listed species is subject to conditions set forth in the permits. Permits and modifications are issued in accordance with and are subject to the ESA and NMFS regulations governing listed fish and wildlife permits (50 CFR parts 222–226).

Those individuals requesting a hearing on an application listed in this notice should set out the specific reasons why a hearing on that application would be appropriate (see **ADDRESSES**). The holding of such a hearing is at the discretion of the Assistant Administrator for Fisheries, NOAA. All statements and opinions contained in the permit action summaries are those of the applicant and do not necessarily reflect the views of NMFS.

Species Covered in This Notice

This notice is relevant to federally endangered Central California Coast (CCC) coho salmon (*Oncorhynchus kisutch*) and threatened CCC steelhead (*O. mykiss*).

Application Received

Dr. Smith requests a 5–year permit (14516) for take of adult and juvenile CCC coho salmon and CCC steelhead associated with two projects in Santa Cruz and San Mateo counties within central California.

Project 1 is the continuation of a long-term study of juvenile CCC coho salmon and CCC steelhead abundance in the Gazos, Waddell and Scott creek watersheds. The project will include electrofishing in fall at multiple sites in each stream to determine juvenile CCC coho salmon and CCC steelhead abundance, conduct an inventory of general habitat conditions, and to assess the effects of habitat conditions on salmonid distribution and survival. These data will be used to demonstrate year-class strength, spawning and redd survival conditions, adult migration access, broodyear legacy effects (general 3–year coho salmon life cycle), and an index of ocean survival. This project will also include seasonal sampling of CCC coho salmon and CCC steelhead in Gazos, Waddell and Scott creek lagoons by beach seine to provide information on relative abundance (using mark and recapture techniques), smolt and adult life history information from scales, and growth. Collection of scales from a sub-sample of each species and life stage is requested to determine age, growth rates, and changes in habitat use over time and tissue samples (fin-clips) are requested for CCC coho salmon for genetic analyses. In addition, this project will include winter carcass surveys for CCC coho salmon in order

to determine sex ratios, proportion of wild versus hatchery origin, gather scales for age determination and life history strategy, and to obtain fin clips for genetic analysis. Ultimately, these data are being used to guide the placement of hatchery reared CCC coho salmon smolts intended to improve weak or lost year classes in these systems. Requested unintentional mortality for juveniles and smolts of both species is two percent and there is no unintentional mortality requested for adults.

Project 2 involves seasonal sampling of CCC steelhead and CCC coho salmon in Pescadero and San Gregorio creek lagoons to determine their abundance (using mark and recapture techniques), growth rates, and to determine smolt and adult life history information from scales. Sampling in late summer and fall will provide information on relative abundance and growth rates while sampling in spring will provide information on smolt abundance and growth during their rearing phase the previous year as well as the spring of their outmigration. Scales collected from a sub-sample of smolt and adult steelhead will be used to provide an index of where they reared as juveniles and to determine age and growth rates. This project also includes creel surveys at Pescadero Lagoon in order to collect scales and length measurements of adult CCC steelhead captured by fisherman during the catch and release fishing season. Data gathered from this project will contribute to the overall understanding and importance of lagoon habitats for these species. In particular, data gathered from Pescadero Lagoon may provide federal and state agencies with important information on the year-to-year impact of re-occurring fish kills during sand bar breach events on the overall production of salmonids in this system. Requested unintentional mortality for juveniles and smolts of both species is two percent and there is no unintentional mortality requested for adults.

Dated: August 11, 2009.

Therese Conant,

Acting Division Chief, Endangered Species Division, Office of Protected Resources, National Marine Fisheries Service.

[FR Doc. E9–19719 Filed 8–14–09; 8:45 am]

BILLING CODE 3510–22–S

DEPARTMENT OF COMMERCE

Foreign-Trade Zones Board

[Order No. 1641]

Expansion of Foreign-Trade Zone 57, Charlotte, North Carolina, Area

Pursuant to its authority under the Foreign-Trade Zones Act of June 18, 1934, as amended (19 U.S.C. 81a-81u), the Foreign-Trade Zones Board (the Board) adopts the following Order:

Whereas, the North Carolina Department of Commerce, grantee of Foreign-Trade Zone 57, submitted an application to the Board for authority to expand its zone to include an additional site (Site 16) in the Charlotte, North Carolina area, adjacent to the Charlotte Customs and Border Protection port of entry (FTZ Docket 62-2008, filed 10/28/08);

Whereas, notice inviting public comment was given in the Federal Register (73 FR 65583, 11/4/08), and the application has been processed pursuant to the FTZ Act and the Board's regulations;

Whereas, on April 24, 2009, the grant of authority was reissued to the Charlotte Regional Partnership, Inc. (Board Order 1613, 74 FR 21622, 05/8/09); and,

Whereas, the Board adopts the findings and recommendations of the examiner's report, and finds that the requirements of the FTZ Act and Board's regulations are satisfied, and that the proposal is in the public interest;

Now, therefore, the Board hereby orders:

The application to expand FTZ 57 is approved, subject to the FTZ Act and the Board's regulations, including Section 400.28, and subject to a sunset provision that would terminate authority for Site 16 on August 31, 2014, if no activity has occurred under FTZ procedures before that date.

Signed at Washington, DC, this 5th day of August 2009.

Ronald K. Lorentzen,

Acting Assistant Secretary of Commerce for Import Administration, Alternate Chairman, Foreign-Trade Zones Board.

Attest:

Andrew McGilvray,

Executive Secretary.

[FR Doc. E9–19676 Filed 8–14–09; 8:45 am]

BILLING CODE 3510–DS–S

DEPARTMENT OF COMMERCE

Foreign–Trade Zones Board

Order No. 1637

Expansion of Foreign–Trade Zone 8, Toledo, Ohio

Pursuant to its authority under the Foreign–Trade Zones (FTZ) Act of June 18, 1934, as amended (19 U.S.C. 81a–81u), the Foreign–Trade Zones Board (the Board) adopts the following Order:

Whereas, the Toledo–Lucas County Port Authority, grantee of Foreign–Trade Zone No. 8, submitted an application to the Board for authority to expand Site 1 at the Port of Toledo Complex, within the Toledo/Sandusky Customs and Border Protection port of entry (FTZ Docket 64–2008, filed 12/2/2008);

Whereas, notice inviting public comment was given in the **Federal Register** (73 FR 78289, 12/22/2008) and the application has been processed pursuant to the FTZ Act and the Board's regulations; and,

Whereas, the Board adopts the findings and recommendations of the examiner's report, and finds that the requirements of the FTZ Act and the Board's regulations are satisfied, and that the proposal is in the public interest;

Now, therefore, the Board hereby orders:

The application to expand FTZ 8 - Site 1 is approved, subject to the Act and the Board's regulations, including Section 400.28.

Signed at Washington, DC, this 5th day of August 2009.

Ronald K. Lorentzen,

Acting Assistant Secretary of Commerce for Import Administration, Alternate Chairman, Foreign–Trade Zones Board.

Attest:

Andrew McGilvray,

Executive Secretary.

[FR Doc. E9–19673 Filed 8–14–09; 8:45 am]

BILLING CODE 3510–DS–S

DEPARTMENT OF COMMERCE

International Trade Administration

A–570–890

Wooden Bedroom Furniture from the People's Republic of China: Final Results of Antidumping Duty Administrative Review and New Shipper Reviews

AGENCY: Import Administration, International Trade Administration, Department of Commerce.

SUMMARY: On February 9, 2009, the Department of Commerce (''Department'') published its preliminary results and partial rescission in the antidumping duty administrative review and new shipper reviews (''NSRs'') of wooden bedroom furniture from the People's Republic of China (''PRC''). The period of review (''POR'') for the administrative review and the new shipper reviews is January 1, 2007, through December 31, 2007. In the administrative review, we have determined that the participating mandatory respondent, Guangdong Yihua Timber Industry Co., Ltd. (''Yihua Timber''), made sales in the United States at prices below normal value. With respect to the remaining respondents in the administrative review, we have determined that these entities have provided sufficient evidence demonstrating that they are separate from the PRC–entity and, with the exception of Orient International Holding Shanghai Foreign Trading Co. Ltd. (''Orient International''), we have assigned a margin based on the rate calculated for Yihua Timber. For the NSRs, the Department also reviewed two exporter/producers, Golden Well International (HK), Ltd./Zhangzhou XYM Furniture Product Co., Ltd. (''Golden Well'') and Dongguan Sunshine Furniture Co., Ltd./Dongguan Sunshine Furniture Co., Ltd. (''Sunshine''). We invited interested parties to comment on our preliminary results in these reviews. Based on our analysis of the comments we received in these reviews, we made certain changes to our calculations for Yihua Timber and for the new shippers. The final dumping margins for these reviews are listed in the ''Final Results Margins'' section below.

EFFECTIVE DATE: August 17, 2009.

FOR FURTHER INFORMATION CONTACT: Paul Stolz or Sergio Balbontin, AD/CVD Operations, Office 8, Import Administration, International Trade Administration, U.S. Department of Commerce, 14th Street and Constitution Avenue, N.W., Washington, DC 20230; telephone: (202) 482–4474 and (202) 482–6478, respectively.

Background

The Department published its preliminary results on February 9, 2009. *See Wooden Bedroom Furniture From the People's Republic of China: Preliminary Results of Antidumping Duty Administrative and New Shipper Reviews and Partial Rescission of Administrative Review*, 74 FR 6372 (February 9, 2009) (''*Preliminary Results*''). We invited parties to comment on the *Preliminary Results*. On February 24, 2009, and March 4, 2009, the Department sent Yihua Timber the Fourth Supplemental Questionnaire and addendum, respectively. On March 17, 2009, Yihua Timber provided its response to the Fourth Supplemental Questionnaire. On February 24, 2009, March 10, 2009, March 20, 2009, and March 25, 2009, Yihua Timber provided information on the weights of it products. On March 6, 2009, we received publicly available surrogate value information from Yihua Timber and American Furniture Manufacturers Committee for Legal Trade and Vaughan–Bassett Furniture Company (''Petitioners''). On March 16, 2009, we received rebuttal comments on the publicly available surrogate value information from Yihua Timber and the Petitioners.

On April 20, 2009, the Department extended the deadline for the final results of the administrative and new shipper reviews to August 10, 2009. *See Wooden Bedroom Furniture from the People's Republic of China: Extension of Time Limit for the Final Results of the Antidumping Duty Administrative Review and New Shipper Reviews*, 74 FR 17951 (April 20, 2009).

The Department conducted verification of Yihua Timber, Yihua Timber's U.S. subsidiary New Classic Home Furnishings, Inc.'s (''New Classic''), and Sunshine's data from April 6, 2009, to April 16, 2009, and April 22, 2009, to April 24, 2009. *See* ''Verification'' section, below, for additional information. On May 18, 2009, we requested that Yihua Timber submit revised U.S. sales and factors of production (''FOP'') databases pursuant to the minor corrections presented at Yihua Timber's and New Classic's verification. On May 22, 2009, Yihua Timber provided the revised U.S. sales and FOP databases.

On May 21, 2009 Yihua Timber submitted unsolicited, untimely new factual information, which the Department rejected on May 26, 2009. *See* Letter from the Department, regarding ''Wooden Bedroom Furniture from the People's Republic of China: Rejection of New Factual Information,'' dated May 26, 2009.

Interested parties submitted case and rebuttal briefs on May 27, 2009, and June 4, 2009, respectively. On May 28, 2009, we rejected Yihua Timber's case brief due to untimely new information included in Yihua Timber's case brief. *See* Letter from the Department, regarding, ''Wooden Bedroom Furniture from the People's Republic of China: Rejection of Case Brief,'' dated May 28, 2009. On June 6, 2009, Yihua Timber resubmitted its case brief with the new information redacted. On June 10, 2009, we rejected the rebuttal brief of Lifestyle Enterprise, Inc., Trade Masters of Texas, Inc., and Emerald Home Furnishings, LLC (collectively ''Importers' Coalition'') and the rebuttal brief of COE, Ltd. due to untimely new arguments included in their rebuttal briefs. *See* Letters from the Department, regarding ''Wooden Bedroom Furniture from the People's Republic of China: Rejection of New Argument,'' dated June 10, 2009. On June 11, 2009, the Importers' Coalition and COE, Ltd. resubmitted their respective rebuttal briefs with the new arguments redacted. On June 12, 2009, we rejected Yihua Timber's rebuttal brief due to an untimely new argument included its rebuttal brief. *See* Letter from the Department, regarding ''Wooden Bedroom Furniture from the People's Republic of China: Rejection of Argument,'' dated June 12, 2009. On June 15, 2009, Yihua Timber resubmitted its rebuttal brief with the new argument redacted.

Analysis of Comments Received

All issues raised in the case and rebuttal briefs by parties in these reviews are addressed in the Memorandum from John M. Andersen, Acting Deputy Assistant Secretary for Antidumping and Countervailing Duty Operations, to Ronald K. Lorentzen, Acting Assistant Secretary for Import Administration, ''Antidumping Duty Administrative and New Shipper Reviews of Wooden Bedroom Furniture from the People's Republic of China: Issues and Decision Memorandum for the Final Results of the 2007 Antidumping Duty Administrative and New Shipper Reviews,'' dated August 10, 2009, which is hereby adopted by this notice (''Issues and Decision Memorandum''). A list of the issues which parties raised and to which we respond in the Issues and Decision Memorandum is attached to this notice as an Appendix. The Issues and Decision Memorandum is a public document and is on file in the Central Records Unit, Main Commerce Building, Room 1117, and is accessible on the Web at *http://ia.ita.doc.gov/frn*. The paper copy and electronic version of the memorandum are identical in content.

Period of Review

The POR is January 1, 2007, through December 31, 2007.

Scope of the Order

The product covered by the order is wooden bedroom furniture. Wooden bedroom furniture is generally, but not

exclusively, designed, manufactured, and offered for sale in coordinated groups, or bedrooms, in which all of the individual pieces are of approximately the same style and approximately the same material and/or finish. The subject merchandise is made substantially of wood products, including both solid wood and also engineered wood products made from wood particles, fibers, or other wooden materials such as plywood, strand board, particle board, and fiberboard, with or without wood veneers, wood overlays, or laminates, with or without non–wood components or trim such as metal, marble, leather, glass, plastic, or other resins, and whether or not assembled, completed, or finished.

The subject merchandise includes the following items: (1) wooden beds such as loft beds, bunk beds, and other beds; (2) wooden headboards for beds (whether stand–alone or attached to side rails), wooden footboards for beds, wooden side rails for beds, and wooden canopies for beds; (3) night tables, night stands, dressers, commodes, bureaus, mule chests, gentlemen's chests, bachelor's chests, lingerie chests, wardrobes, vanities, chessers, chifforobes, and wardrobe–type cabinets; (4) dressers with framed glass mirrors that are attached to, incorporated in, sit on, or hang over the dresser; (5) chests–on-chests,[1] highboys,[2] lowboys,[3] chests of drawers,[4] chests,[5] door chests,[6] chiffoniers,[7] hutches,[8] and armoires;[9] (6) desks, computer stands, filing cabinets, book cases, or writing tables that are attached to or incorporated in the subject merchandise; and (7) other bedroom furniture consistent with the above list.

The scope of the order excludes the following items: (1) seats, chairs, benches, couches, sofas, sofa beds, stools, and other seating furniture; (2) mattresses, mattress supports (including box springs), infant cribs, water beds, and futon frames; (3) office furniture, such as desks, stand–up desks, computer cabinets, filing cabinets, credenzas, and bookcases; (4) dining room or kitchen furniture such as dining tables, chairs, servers, sideboards, buffets, corner cabinets, china cabinets, and china hutches; (5) other non–bedroom furniture, such as television cabinets, cocktail tables, end tables, occasional tables, wall systems, book cases, and entertainment systems; (6) bedroom furniture made primarily of wicker, cane, osier, bamboo or rattan; (7) side rails for beds made of metal if sold separately from the headboard and footboard; (8) bedroom furniture in which bentwood parts predominate;[10] (9) jewelry armories;[11] (10) cheval mirrors;[12] (11) certain metal parts;[13] (12) mirrors that do not attach to, incorporate in, sit on, or hang over a dresser if they are not designed and marketed to be sold in conjunction with a dresser as part of a dresser–mirror set; and (13) upholstered beds.[14]

Imports of subject merchandise are classified under subheading 9403.50.9040 of the HTSUS as ''wooden . . . beds'' and under subheading 9403.50.9080 of the HTSUS as ''other . . . wooden furniture of a kind used in the bedroom.'' In addition, wooden headboards for beds, wooden footboards for beds, wooden side rails for beds, and wooden canopies for beds may also be entered under subheading 9403.50.9040 of the HTSUS as ''parts of wood'' and framed glass mirrors may also be entered under subheading 7009.92.5000 of the HTSUS as ''glass mirrors . . . framed.'' This order covers all wooden bedroom furniture meeting the above description, regardless of tariff classification. Although the HTSUS subheadings are provided for convenience and customs purposes, our written description of the scope of this proceeding is dispositive.

Verification

As provided in section 782(i) of the Tariff Act of 1930, as amended (''Act''), we verified the information submitted by Yihua Timber, New Classic, and Sunshine. *See* Memorandum from Erin Begnal, Program Manager, Office 8 and Sergio Balbontin, International Trade Compliance Analyst, Office 8 to Wendy J. Frankel, Director, Office 8, ''Verification of the Sales and Factors of Production Response of Guangdong Yihua Timber Industry Co., Ltd. in the Antidumping Duty Administrative Review of Wooden Bedroom Furniture from the People's Republic of China,''

[1] A chest-on-chest is typically a tall chest-of-drawers in two or more sections (or appearing to be in two or more sections), with one or two sections mounted (or appearing to be mounted) on a slightly larger chest; also known as a tallboy.

[2] A highboy is typically a tall chest of drawers usually composed of a base and a top section with drawers, and supported on four legs or a small chest (often 15 inches or more in height).

[3] A lowboy is typically a short chest of drawers, not more than four feet high, normally set on short legs.

[4] A chest of drawers is typically a case containing drawers for storing clothing.

[5] A chest is typically a case piece taller than it is wide featuring a series of drawers and with or without one or more doors for storing clothing. The piece can either include drawers or be designed as a large box incorporating a lid.

[6] A door chest is typically a chest with hinged doors to store clothing, whether or not containing drawers. The piece may also include shelves for televisions and other entertainment electronics.

[7] A chiffonier is typically a tall and narrow chest of drawers normally used for storing undergarments and lingerie, often with mirror(s) attached.

[8] A hutch is typically an open case of furniture with shelves that typically sits on another piece of furniture and provides storage for clothes.

[9] An armoire is typically a tall cabinet or wardrobe (typically 50 inches or taller), with doors, and with one or more drawers (either exterior below or above the doors or interior behind the doors), shelves, and/or garment rods or other apparatus for storing clothes. Bedroom armoires may also be used to hold television receivers and/or other audio-visual entertainment systems.

[10] As used herein, bentwood means solid wood made pliable. Bentwood is wood that is brought to a curved shape by bending it while made pliable with moist heat or other agency and then set by cooling or drying. *See* Customs' Headquarters' Ruling Letter 043859, dated May 17, 1976.

[11] Any armoire, cabinet or other accent item for the purpose of storing jewelry, not to exceed 24″ in width, 18″ in depth, and 49″ in height, including a minimum of 5 lined drawers lined with felt or felt-like material, at least one side door (whether or not the door is lined with felt or felt-like material), with necklace hangers, and a flip-top lid with inset mirror. *See* Issues and Decision Memorandum from Laurel LaCivita to Laurie Parkhill, Office Director, Concerning Jewelry Armoires and Cheval Mirrors in the Antidumping Duty Investigation of Wooden Bedroom Furniture from the People's Republic of China, dated August 31, 2004. *See also Wooden Bedroom Furniture from the People's Republic of China: Notice of Final Results of Changed Circumstances Review and Revocation in Part*, 71 FR 38621 (July 7, 2006).

[12] Cheval mirrors are any framed, tiltable mirror with a height in excess of 50″ that is mounted on a floor-standing, hinged base. Additionally, the scope of the order excludes combination cheval mirror/jewelry cabinets. The excluded merchandise is an integrated piece consisting of a cheval mirror, *i.e.*, a framed tiltable mirror with a height in excess of 50 inches, mounted on a floor-standing, hinged base, the cheval mirror serving as a door to a cabinet back that is integral to the structure of the mirror and which constitutes a jewelry cabinet lined with fabric, having necklace and bracelet hooks, mountings for rings and shelves, with or without a working lock and key to secure the contents of the jewelry cabinet back to the cheval mirror, and no drawers anywhere on the integrated piece. The fully assembled piece must be at least 50 inches in height, 14.5 inches in width, and 3 inches in depth. *See Wooden Bedroom Furniture From the People's Republic of China: Final Results of Changed Circumstances Review and Determination To Revoke Order in Part*, 72 FR 948 (January 9, 2007).

[13] Metal furniture parts and unfinished furniture parts made of wood products (as defined above) that are not otherwise specifically named in this scope (*i.e.*, wooden headboards for beds, wooden footboards for beds, wooden side rails for beds, and wooden canopies for beds) and that do not possess the essential character of wooden bedroom furniture in an unassembled, incomplete, or unfinished form. Such parts are usually classified under the Harmonized Tariff Schedule of the United States (''HTSUS'') subheading 9403.90.7000.

[14] Upholstered beds that are completely upholstered, *i.e.*, containing filling material and completely covered in sewn genuine leather, synthetic leather, or natural or synthetic decorative fabric. To be excluded, the entire bed (headboards, footboards, and side rails) must be upholstered except for bed feet, which may be of wood, metal, or any other material and which are no more than nine inches in height from the floor. *See Wooden Bedroom Furniture from the People's Republic of China: Final Results of Changed Circumstances Review and Determination to Revoke Order in Part*, 72 FR 7013 (February 14, 2007).

(May 18, 2009) (''Yihua Timber Verification Report''); *see also* Memorandum from Robert Bolling, Program Manager, Office 4 and Gene Degnan, Acting Program Manager, Office 8 to Wendy J. Frankel, Director, Office 8, ''Verification of the U.S. Sales Questionnaire Responses of Guangdong Yihua Timber Industry Co., Ltd. and their U.S. Subsidiary New Classic Home Furnishing, Inc. in the Antidumping Duty Administrative Review of Wooden Bedroom Furniture from the People's Republic of China'' (May 18, 2009) (''New Classic Verification Report''), and Memorandum from Erin Begnal, Program Manager, Office 8 and Sergio Balbontin, International Trade Compliance Analyst, Office 8 to Wendy J. Frankel, Director, Office 8, ''Verification Report of the Sales and Factors Response of Dongguan Sunshine Furniture Co., Ltd. in the Antidumping Duty New Shipper Review of Wooden Bedroom Furniture from the People's Republic of China'' (May 7, 2009) (''Sunshine Verification Report'') on file in the CRU. For the verified companies, we used standard verification procedures, including examination of relevant accounting and production records, as well as original source documents provided by respondents. For further details on the verifications, *see* the Yihua Timber Verification Report, New Classic Verification Report, and Sunshine Verification Report.

New Shipper Status

For these final results, no party has contested the *bona fides* of either Golden Well's or Sunshine's sales and we continue to find, as in the *Preliminary Results*, that both Golden Well and Sunshine have met the requirements to qualify as a new shipper during the POR and that their sales of wooden bedroom furniture to the United States are appropriate transactions for a new shipper.

Changes Since the Preliminary Results

Based on an analysis of the comments received, the Department has made certain changes in the margin calculations. For the final results, the Department has made the following changes:

Surrogate Value Issues

- The Department revised the surrogate value for Yihua Timber's poplar, ash, and pine, veneers, and plywood using World Trade Atlas (''WTA'') data rather than Philippine National Statistics Office (''NSO'') data as used in the *Preliminary Results*. *See* Issues and Decision Memorandum at Comment 3. *See also* ''Final Results of the 2007 Administrative and New Shipper Reviews of the Antidumping Duty Order on Wooden Bedroom Furniture from the People's Republic of China: Surrogate Value Memorandum,'' dated August 10, 2009 (''SV Memo'').
- The Department revised the surrogate value for Yihua Timber's plywood using WTA data rather than NSO data as used in the *Preliminary Results*. *See* Issues and Decision Memorandum at Comment 4. *See also* SV Memo.
- The Department revised the surrogate value for Yihua Timber's medium density fiberboard (''MDF''). *See* Issues and Decision Memorandum at Comment 5.
- The Department revised the surrogate value for Yihua Timber's particle board. See Issues and Decision Memorandum at Comment 8. *See also* SV Memo.
- The Department will continue using the *Camarines Sur* data used in the *Preliminary Results*, to calculate electricity and truck freight; however, we will not inflate this data for the final results. *See* Issues and Decision Memorandum at Comment 10 and 11, respectively. *See also* SV Memo.
- The Department revised the selection of surrogate financial statements. We continued to use the financial statements for the fiscal year ending December 31, 2007, from the following producers: Maitland–Smith Cebu, Inc. (''Maitland–Smith''); Casa Cebuana Incorporated (''Casa Cebuana''); Diretso Design Furniture Inc., (''Diresto''); Global Classic Designs, Inc., (''Global''); and Las Palmas Furniture, Inc., (''Las Palmas''), all of which are Philippine producers of comparable merchandise. In addition, we used the financial statements for the same period from Arkane International Corporation; Giardini Sole Manufacturing and Trading Corporation (''Giardini''); and SCT Furnishing Corporation, also Phillippine producers of comparable merchandise. *See* Issues and Decision Memorandum at Comments 14–16 for discussion of financial ratios. *See also* SV Memo.
- The Department made changes from the *Preliminary Results* in calculating the surrogate financial ratios for the following surrogate companies: Maitland–Smith, Casa Cebuana, Diretso, and Las Palmas. *See* Issues and Decision Memorandum at Comments 14–16 for a discussion of financial ratios. *See also* SV Memo.

Yihua Timber–Specific Issues

- The Department corrected the surrogate value for Yihua Timber's brokerage and handling charge. *See* Issues and Decision Memorandum at Comment 13.
- The Department adjusted Yihua Timber's warehousing expense paid to its affiliated party to reflect market value. *See* Issues and Decision Memorandum at Comment 19.
- The Department corrected its preliminary finding of facts available as to Yihua Timber's FOP weights. *See* Issues and Decision Memorandum at Comment 20.
- The Department is granting Yihua Timber a by–product offset. *See* Issues and Decision Memorandum at Comment 21.
- The Department corrected its preliminary finding of partial adverse facts available as to Yihua Timber's affiliate (Company A) sales. *See* Issues and Decision Memorandum at Comment 22.
- The Department corrected its preliminary finding of facts available as to Yihua Timber's inventory carrying costs. *See* Issues and Decision Memorandum at Comment 23.
- The Department corrected Yihua Timber's transportation expenses with respect to its Channel 1 sales. *See* Issues and Decision Memorandum at Comment 24.
- The Department corrected programming errors as to Yihua Timber's gross weight, material conversion rates, damaged sales, a miscoded CONNUMU, and recalculation of USDUTYU, CREDITU, and WARRU. *See* Issues and Decision Memorandum at Comment 24.

Separate Rates

In proceedings involving non–market economy (''NME'') countries, the Department begins with a rebuttable presumption that all companies within the country are subject to government control and, thus, should be assigned a single antidumping duty deposit rate. It is the Department's policy to assign all exporters of merchandise subject to an investigation in an NME country this single rate unless an exporter can demonstrate that it is sufficiently independent so as to be entitled to a separate rate. *See Final Determination of*

Sales at Less Than Fair Value: Sparklers From the People's Republic of China, 56 FR 20588 (May 6, 1991), as amplified by *Notice of Final Determination of Sales at Less Than Fair Value: Silicon Carbide From the People's Republic of China*, 59 FR 22585 (May 2, 1994).

In the *Preliminary Results*, we stated that the following companies demonstrated their eligibility for separate–rate status: 1) Yihua Timber; 2) Brother Furniture Manufacture Co., Ltd.; 3) Dongguan Mingsheng Furniture Co., Ltd.; 4) Fujian Lianfu Forestry Co., Ltd. aka Fujian Wonder Pacific, Inc. (Dare Group); 5) Fuzhou Huan Mei Furniture Co., Ltd. (Dare Group); 6) Jiangsu Dare Furniture Co., Ltd. (Dare Group); 7) Shenzhen Shen Long Hang Industry Co., Ltd.; 8) Xingli Arts & Crafts Factory of Yangchun; and 9) Zhongshan Gainwell Furniture Co., Ltd. Also, in the *Preliminary Results*, we stated that the new shipper, Sunshine, demonstrated its eligibility for separate–rate status. For these final results, we continue to find that evidence placed on the record of these reviews demonstrates that these companies provided information that shows both a *de jure* and *de facto* absence of government control with respect to their respective exports of the merchandise under review, and, thus are eligible for separate–rate status.

With respect to the following companies not selected for individual examination in this review: 1) COE, Ltd.; 2) Decca Furniture Limited; 3) Dongguan Landmark Furniture Products, Ltd.; 4) Dongguan Yihaiwei Furniture Limited; 5) Hwang Ho International Holdings Limited; 6) Meikangchi (Nantong) Furniture Company, Ltd.; 7) Qingdao Shengchang Wooden Co., Ltd.; 8) Transworld (Zhangzhou) Furniture Co., Ltd.; and 9) Winny Universal, Ltd., Zhongshan Winny Furniture Ltd., Winny Overseas, Ltd., we continue to grant a separate rate to these companies because they are wholly owned by individuals or companies located in a market economy. With respect to the new shipper, Golden Well, we continue to grant it a separate rate because it is wholly owned by individuals or companies located in a market economy. As wholly foreign–owned companies, we have no evidence indicating that these companies are under the control of the PRC. Therefore, a separate–rate analysis is not necessary to determine whether these companies are independent from government control. *See Preliminary Results. See also Notice of Final Determination of Sales at Less Than Fair Value: Creatine Monohydrate from the People's Republic of China*, 64 FR 71104, 71104–05 (December 20, 1999) (where the respondent was wholly foreign–owned and, thus, qualified for a separate rate).

The following five exporters did not provide, as appropriate, either a separate rate application or certification: 1) Dongguan Bon Ten Furniture Co., Ltd. (''Bon Ten'') (*see* Issues and Decision Memorandum at Comment 29); 2) Dongguan Qingxi Xinyi Craft Furniture Factory (Joyce Art Factory) (''Joyce Art''); 3) Tianjin Sande Fairwood Furniture Co. Ltd. (''Sande''); 4) Yida Co. Ltd., Yitai Worldwide Ltd., Yili Co., Ltd., and Yetbuild Co., Ltd. (collectively ''Yida''); and 5) Hamilton & Spill, Ltd. (''Hamilton''), and therefore have not demonstrated their eligibility for separate rate status in this administrative review. In the *Preliminary Results*, we found that Dream Rooms Furniture (Shanghai) Co., Ltd.'s (''Dream Rooms'') separate–rate certification was deficient, and thus, Dream Rooms did not demonstrate its eligibility for separate–rate status in this administrative review. *See* section 776(a)(2)(D) of the Act. Consequently, for the final results, the Department is continuing to treat Dream Rooms as part of the PRC–wide entity. *See* Issues and Decision Memorandum at Comment 30.

In addition, while we found Orient International Holding Shanghai Foreign Trading Co., Ltd. (''Orient International'') to be part of the PRC–wide entity in the *Preliminary Results*, we are granting Orient International a separate rate for purposes of the final results. However, we continue to find that Orient International did not act to the best of its ability in this administrative review, and thus we have assigned Orient International a rate based on adverse facts available (''AFA'') for the final results. *See* ''Adverse Facts Available'' section below. *See also* Issues and Decision Memorandum Comment 32.

Adverse Facts Available

Sections 776(a)(1) and (2) of the Act provide that the Department shall apply ''facts otherwise available'' if necessary information is not on the record or an interested party or any other person (A) withholds information that has been requested, (B) fails to provide information within the deadlines established, or in the form and manner requested by the Department, subject to subsections (c)(1) and (e) of section 782, (C) significantly impedes a proceeding, or (D) provides information that cannot be verified as provided by section 782(i) of the Act.

Where the Department determines that a response to a request for information does not comply with the request, section 782(d) of the Act provides that the Department will so inform the party submitting the response and will, to the extent practicable, provide that party the opportunity to remedy or explain the deficiency. If the party fails to remedy the deficiency within the applicable time limits and subject to section 782(e) of the Act, the Department may disregard all or part of the original and subsequent responses, as appropriate. Section 782(e) of the Act provides that the Department ''shall not decline to consider information that is submitted by an interested party and is necessary to the determination but does not meet all applicable requirements established by the administering authority'' if the information is timely, can be verified, is not so incomplete that it cannot be used, and if the interested party acted to the best of its ability in providing the information. Where all of these conditions are met, the statute requires the Department to use the information if it can do so without undue difficulties.

Section 776(b) of the Act further provides that the Department may use an adverse inference in applying the facts otherwise available when a party has failed to cooperate by not acting to the best of its ability to comply with a request for information. Section 776(b) of the Act also authorizes the Department to use as AFA information derived from the petition, the final determination, a previous administrative review, or other information placed on the record.

Orient International

In the *Preliminary Results*, we determined that because Orient International ceased participating in this administrative review, Orient International's information could not be verified. As a result, we found that Orient International did not demonstrate its entitlement to a separate rate and was, therefore, subject to the PRC–wide rate. *See Preliminary Results*. As stated above, for the final results, we no longer find Orient International to be part of the PRC–entity. Orient International's separate rate certification demonstrates that Orient International provided information that shows both a *de jure* and *de facto* absence of government control with respect to its exports of the merchandise under review, and, thus is eligible for separate–rate status. *See* Issues and Decision Memorandum at Comment 32. However, we find that the application of facts available is warranted. In accordance with sections 776(a)(2)(A) through (D), by not responding to the Department's questionnaire and

informing the Department that it would no longer participate in the administrative review as a mandatory respondent, we find that Orient International withheld information requested, failed to produce the requested information in a timely manner, significantly impeded the proceeding, and did not allow for verification, as it had ceased cooperating with the Department.

Moreover, pursuant to section 776(b) of the Act, the Department finds that Orient International failed to cooperate to the best of its ability by not providing a questionnaire response that was essential to the calculation of the antidumping duty margin. Orient International was provided an ample amount of time to submit a response to the Department's antidumping duty questionnaire. At no point did Orient International seek clarification from the Department on the specific requests for information, but rather submitted a letter to the Department indicating that it would no longer respond to the Department's requests for information and that it would no longer participate in the proceeding as a mandatory respondent. Because Orient International failed to cooperate with the Department in this matter, we find it appropriate to use an inference that is adverse to the interests of Orient International in selecting from among the facts otherwise available. *See* section 776(b) of the Act. By doing so, we will ensure that Orient International will not obtain a more favorable result by failing to cooperate had it cooperated fully in this investigation. *See Statement of Administrative Action* accompanying the Uruguay Round Agreements Act, H.R. Doc. 103–316, vol. 1 (1994) at 870 (''*SAA*''). *See also* Issues and Decision Memorandum Comment 32.

The PRC–Wide Entity

Because we begin with the presumption that all companies within an NME country are subject to government control and because only the companies listed under the ''Final Results Margins'' section, below, have overcome that presumption, we are applying a single antidumping rate (*i.e.*, the PRC–wide rate) to all other exporters of subject merchandise from the PRC. These other companies did not demonstrate entitlement to a separate rate. *See*, *e.g.*, *Synthetic Indigo From the People's Republic of China; Notice of Final Determination of Sales at Less Than Fair Value*, 65 FR 25706, 25707 (May 3, 2000). The PRC–wide rate applies to all entries of subject merchandise except for entries from the respondents that are listed in the ''Final Results Margins'' section, below.

The Department based the margin for the PRC–wide entity on AFA. *See Preliminary Results*. Pursuant to section 776(a) of the Act, the Department found that because the PRC–wide entity failed to respond to the Department's questionnaires, withheld or failed to provide information in a timely manner or in the form or manner requested by the Department, submitted information that could not be verified, or otherwise impeded the process, it was appropriate to apply a dumping margin for the PRC–wide entity using facts otherwise available on the record. The Department further determined that an adverse inference was appropriate because the PRC–wide entity failed to respond to requests for information and therefore failed to cooperate by not acting to the best of its ability. *See* ''Selection of AFA Rate,'' below.

Selection of AFA Rate

In deciding which facts to use as AFA, section 776(b) of the Act and 19 CFR 351.308(c) authorize the Department to rely on information derived from (1) the petition, (2) a final determination in the investigation, (3) any previous review or determination, or (4) any information placed on the record. In reviews, the Department normally selects, as AFA, the highest rate on the record of any segment of the proceeding. *See*, *e.g.*, *Freshwater Crawfish Tail Meat from the People's Republic of China: Notice of Final Results of Antidumping Duty Administrative Review*, 68 FR 19504, 19506 (April 21, 2003). The Court of International Trade (''CIT'') and the Court of Appeals for the Federal Circuit have consistently upheld the Department's practice in this regard. *See Rhone Poulenc, Inc. v. United States*, 899 F.2d 1185, 1190 (Fed. Cir. 1990) (''*Rhone Poulenc*''); *NSK Ltd. v. United States*, 346 F. Supp. 2d 1312, 1335 (CIT 2004) (upholding a 73.55 percent total AFA rate, the highest available dumping margin from a different respondent in a less than fair value investigation); *see also Kompass Food Trading Int'l v. United States*, 24 CIT 678, 680 (2000) (upholding a 51.16 percent total AFA rate, the highest available dumping margin from a different, fully cooperative respondent); and *Shanghai Taoen Int'l Trading Co., Ltd. v. United States*, 360 F. Supp 2d 1339, 1348 (CIT 2005) (upholding a 223.01 percent total AFA rate, the highest available dumping margin from a different respondent in a previous administrative review).

The Department's practice when selecting an adverse rate from among the possible sources of information is to ensure that the margin is sufficiently adverse ''so as to effectuate the statutory purposes of the adverse facts available rule to induce respondents to provide the Department with complete and accurate information in a timely manner.'' *See Notice of Final Determination of Sales at Less than Fair Value: Static Random Access Memory Semiconductors from Taiwan*, 63 FR 8909, 8932 (February 23, 1998). The Department's practice also ensures ''that the party does not obtain a more favorable result by failing to cooperate than if it had cooperated fully.'' *See*, *SAA* at 870; *see also Notice of Final Determination of Sales at Less than Fair Value: Certain Frozen and Canned Warmwater Shrimp from Brazil*, 69 FR 76910, 76912 (December 23, 2004); *D&L Supply Co. v. United States*, 113 F.3d 1220, 1223 (Fed. Cir. 1997). In choosing the appropriate balance between providing respondents with an incentive to respond accurately and imposing a rate that is reasonably related to the respondent's prior commercial activity, selecting the highest prior margin ''reflects a common sense inference that the highest prior margin is the most probative evidence of current margins because, if it were not so, the importer, knowing of the rule, would have produced current information showing the margin to be less.'' *Rhone Poulenc*, 899 F.2d at 1190. Consistent with the statute, court precedent, and its normal practice, the Department has assigned the rate of 216.01 percent, the highest rate on the record of any segment of the proceeding, a calculated company–specific rate in a new shipper review of wooden bedroom furniture from the PRC, to Orient International and to the PRC–wide entity,[15] as AFA. *See Wooden Bedroom Furniture from the People's Republic of China: Final Results of the 2004–2005 Semi–Annual New Shipper Reviews*, 71 FR 70739 (December 6, 2006) (''*Final 04–05 New Shipper Reviews*'').

Corroboration of Secondary Information

Section 776(c) of the Act provides that, when the Department relies on secondary information rather than on information obtained in the course of an investigation or review, it shall, to the extent practicable, corroborate that information from independent sources that are reasonably at its disposal. Secondary information is defined as information derived from the petition that gave rise to the investigation or

[15] Bon Ten, Dream Rooms, Hamilton, Joyce Art, Sande, and Yida are all part of the PRC-wide entity.

review, the final determination concerning the subject merchandise, or any previous review under section 751 concerning the subject merchandise. *See SAA* at 870. Corroborate means that the Department will satisfy itself that the secondary information to be used has probative value. *Id.* To corroborate secondary information, the Department will, to the extent practicable, examine the reliability and relevance of the information to be used. *See Tapered Roller Bearings and Parts Thereof, Finished and Unfinished from Japan, and Tapered Roller Bearings Four Inches or Less in Outside Diameter, and Components Thereof, from Japan: Preliminary Results of Antidumping Duty Administrative Reviews and Partial Termination of Administrative Reviews*, 61 FR 57391, 57392 (November 6, 1996) (unchanged in the final determination, *Final Results of Antidumping Duty Administrative Reviews and Termination in Part: Tapered Roller Bearings and Parts Thereof, Finished and Unfinished from Japan, and Tapered Roller Bearings Four Inches or Less in Outside Diameter, and Components Thereof, from Japan*, 62 FR 11825 (March 13, 1997)). Independent sources used to corroborate such evidence may include, for example, published price lists, official import statistics and customs data, and information obtained from interested parties during the particular investigation. *See Notice of Preliminary Determination of Sales at Less Than Fair Value: High and Ultra–High Voltage Ceramic Station Post Insulators from Japan*, 68 FR 35627 (June 16, 2003) (unchanged in final determination, *Notice of Final Determination of Sales at Less Than Fair Value: High and Ultra High Voltage Ceramic Station Post Insulators from Japan*, 68 FR 62560 (November 5, 2003)); and *Notice of Final Determination of Sales at Less Than Fair Value: Live Swine From Canada*, 70 FR 12181, 12183–84 (March 11, 2005).

The AFA rate that the Department is now using was determined in the published final results of a previous new shipper review. *See Wooden Bedroom Furniture from the People's Republic of China: Final Results of the 2004–2005 Semi–Annual New Shipper Reviews*, 71 FR 70739, 70741 (December 6, 2006). In that new shipper review, the Department calculated a company–specific rate, which was above the PRC–wide rate established in the investigation. Because this rate is a company–specific calculated rate, we have determined this rate to be reliable.

With respect to the relevance aspect of corroboration, the Department will consider information reasonably at its disposal to determine whether a margin continues to have relevance. Where circumstances indicate that the selected margin is not appropriate as AFA, the Department will disregard the margin and determine an appropriate margin. *See Fresh Cut Flowers from Mexico: Final Results of Antidumping Administrative Review*, 61 FR 6812, 6814 (February 22, 1996) (where the Department disregarded the highest margin in that case as adverse best information available (the predecessor to facts available) because the margin was based on another company's uncharacteristic business expense resulting in an unusually high margin). Similarly, the Department does not apply a margin that has been discredited. *See D&L Supply Co. v. United States*, 113 F. 3d 1220, 1221 (Fed. Cir. 1997) (ruling that the Department will not use a margin that has been judicially invalidated). To assess the relevancy of the rate used, the Department compared the margin calculations of the mandatory respondent in the instant administrative review with the 216.01 percent calculated rate from the 2004–2005 new shipper review. The Department found that the margin of 216.01 percent was within the range of the margins calculated on the record of the instant administrative review. Because the record of this administrative review contains margins within the range of 216.01 percent, we determine that the rate from the 2004–2005 review continues to be relevant for use in this administrative review.

As the adverse margin is both reliable and relevant, we determine that it has probative value. Accordingly, we determine that this rate meets the corroboration criterion established in section 776(c) of the Act that secondary information have probative value. As a result, the Department determines that the margin is corroborated for the purposes of this administrative review and may reasonably be applied to the PRC–wide entity as AFA.

Final Results Margins

We determine that the following weighted–average percentage margins exist for the POR:

Administrative Review

Exporter	Antidumping Duty Percent Margin
Guangdong Yihua Timber Industry co., Ltd. (a.k.a. Yihua Timber Industry Co., Ltd.)	29.98%
Brother Furniture Manufacture Co., Ltd.	29.98%
COE, Ltd.	29.98%
Decca Furniture Limited	29.98%
Dongguan Landmark Furniture Products Ltd.	29.98%
Dongguan Mingsheng Furniture Co., Ltd.	29.98%
Dongguan Yihaiwei Furniture Limited	29.98%
Fujian Lianfu Forestry Co., Ltd. aka Fujian Wonder Pacific , Inc. (Dare Group)	29.98%
Fuzhou Huan Mei Furniture Co., Ltd. (Dare Group)	29.98%
Jiangsu Dare Furniture Co., Ltd. (Dare Group)	29.98%
Hwang Ho International Holdings Limited	29.98%
Meikangchi (Nantong) Furniture Company Ltd.	29.98%
Orient International Holding Shanghai Foreign Trading Co., Ltd.	216.01%
Qingdao Shengchang Wooden Co., Ltd.	29.98%
Shenzhen Shen Long Hang Industry Co., Ltd.	29.98%
Transworld (Zhangzhou) Furniture Co., Ltd.	29.98%
Winny Universal, Ltd., Zhongshan Winny Furniture Ltd., Winny Overseas, Ltd.	29.98%
Xingli Arts & Crafts Factory of Yangchun	29.98%
Zhongshan Gainwell Furniture Co., Ltd.	29.98%
PRC–Wide Entity[16]	216.01%

[16] Bon Ten, Dream Rooms, Hamilton, Joyce Art, Sande, and Yida are all part of the PRC-wide entity.

New Shipper Review

Exporter / Producer Combination	Antidumping Duty Percent Margin
Golden Well International (HK), Ltd. / Producer: Zhangzhou XYM Furniture Product Co., Ltd.	0%
Dongguan Sunshine Furniture Co., Ltd. /Dongguan Sunshine Furniture Co., Ltd.	0%

Assessment Rates

The Department will determine, and U.S. Customs and Border Protection (''CBP'') shall assess, antidumping duties on all appropriate entries of subject merchandise in accordance with the final results of this review. For assessment purposes, we calculated exporter/importer- (or customer) -specific assessment rates for merchandise subject to this review. Where appropriate, we calculated an *ad valorem* rate for each importer (or customer) by dividing the total dumping margins for reviewed sales to that party by the total entered values associated with those transactions. For duty–assessment rates calculated on this basis, we will direct CBP to assess the resulting ad valorem rate against the entered customs values for the subject merchandise. Where appropriate, we calculated a per–unit rate for each importer (or customer) by dividing the total dumping margins for reviewed sales to that party by the total sales quantity associated with those transactions. For duty–assessment rates calculated on this basis, we will direct CBP to assess the resulting per–unit rate against the entered quantity of the subject merchandise. Where an importer- (or customer) -specific assessment rate is *de minimis* (*i.e.*, less than 0.50 percent), the Department will instruct CBP to assess that importer (or customer's) entries of subject merchandise without regard to antidumping duties. We intend to instruct CBP to liquidate entries containing subject merchandise exported by the PRC–wide entity at the PRC–wide rate we determine in the final results of this review. The Department intends to issue appropriate assessment instructions directly to CBP 15 days after publication of the final results of this review.

Cash–Deposit Requirements

The following cash deposit requirements will be effective upon publication of the final results of this administrative review and new shipper reviews for all shipments of the subject merchandise entered, or withdrawn from warehouse, for consumption on or after the publication date, as provided for by section 751(a)(2)(C) of the Act: 1) for the exporters listed above, the cash deposit rate will be the rates shown for those companies; 2) for previously investigated or reviewed PRC and non–PRC exporters not listed above that have separate rates, the cash deposit rate will continue to be the exporter–specific rate published for the most recent period; 3) for all PRC exporters of subject merchandise which have not been found to be entitled to a separate rate, the cash deposit rate will be the PRC–wide rate of 216.01 percent; and 4) for all non–PRC exporters of subject merchandise which have not received their own rate, the cash deposit rate will be the rate applicable to the PRC exporters that supplied that non–PRC exporter. These deposit requirements shall remain in effect until further notice.

Notification of Interested Parties

This notice also serves as a final reminder to importers of their responsibility under 19 CFR 351.402(f)(2) to file a certificate regarding the reimbursement of antidumping duties prior to liquidation of the relevant entries during this review period. Failure to comply with this requirement could result in the Secretary's presumption that reimbursement of the antidumping duties occurred and the subsequent assessment of double antidumping duties.

This notice also serves as a reminder to parties subject to administrative protective orders (''APOs'') of their responsibility concerning the return or destruction of proprietary information disclosed under the APO in accordance with 19 CFR 351.305(a)(3), which continues to govern business proprietary information in this segment of the proceeding. Timely written notification of the return/destruction of APO materials or conversion to judicial protective order is hereby requested. Failure to comply with the regulations and terms of an APO is a violation which is subject to sanction.

Disclosure

We will disclose the calculations performed within five days of the date of publication of this notice to parties in this proceeding in accordance with 19 CFR 351.224(b).

We are issuing and publishing these final results and notice in accordance with sections 751(a)(1) and 777(i)(1) of the Act.

Dated: August 10, 2009.

Carole Showers,

Deputy Assistant Secretary for Policy and Negotiations.

Appendix

Comment 1: Use of the Philippines as Surrogate Country
Comment 2: Net Import Quantity - Philippines
Comment 3: Surrogate Value for Poplar, Ash and Pine, Veneers and Plywood
Comment 4: Surrogate Value for Plywood
Comment 5: Surrogate Value for Medium Density Fiberboard (MDF)
Comment 6: HS Code for Calculation of the Surrogate Value for Pine
Comment 7: Surrogate Value for Sealer
Comment 8: Surrogate Value for Particle Board
Comment 9: Surrogate Value for Labor
Comment 10: Surrogate Value for Energy
Comment 11: Surrogate Value for Truck Freight
Comment 12: Treatment of Ocean Freight Expense
Comment 13: Treatment of and Surrogate Value for Brokerage & Handling
Comment 14: Selection of Financial Statements
Comment 15: Treatment of Works–in-Progress and Changes in Finished Goods Inventory in Surrogate Financial Ratios
Comment 16: Treatment of Indirect Materials, Indirect Labor & Subcontractor Expenses
Comment 17: Constructed Export Price Offset
Comment 18: Yield Ratio Calculation
Comment 19: Treatment of Warehousing Expense
Comment 20: Treatment of Yihua Timber's FOP and Gross Weights
Comment 21: By–Product Offset
Comment 22: Yihua Timber Affiliate's (Company A's) Sales
Comment 23: Inventory Carrying Costs
Comment 24: Inland Freight for Yihua Timber's Channel 1 Sales
Comment 25: SAS Programming Changes and Error
Comment 26: Use of Combination Rates
Comment 27: Absorption of Antidumping Duties
Comment 28: Cash Deposit Instruction for Companies that Lost Their Separate Rate

Comment 29: Whether to Rescind the Review with Respect to Dongguan Bon Ten Furniture Co., Ltd.
Comment 30: Whether to Grant Dream Rooms Furniture (Shanghai) Co., Ltd. a Separate Rate
Comment 31: Whether the Department Failed to Timely Initiate the Administrative Review Thereby Erroneously Choosing Orient International as a Mandatory Respondent
Comment 32: Separate Rate Status of Orient International

[FR Doc. E9–19666 Filed 8–14–09; 8:45 am]

BILLING CODE 3510–DS–S

DEPARTMENT OF COMMERCE

Foreign-Trade Zones Board

[Docket 34–2009]

Foreign-Trade Zone 49—Newark, New Jersey Area, Application for Subzone Status, The Swatch Group (U.S.) Inc. (Watches, Jewelry Products and Leather Goods), Secaucus, New Jersey

An application has been submitted to the Foreign–Trade Zones Board (the Board) by the Port Authority of New York and New Jersey, grantee of FTZ 49, requesting special–purpose subzone status for the distribution facility of the Swatch Group (U.S.) Inc. (Swatch), located in Secaucus, New Jersey. The application was submitted pursuant to the provisions of the Foreign–Trade Zones Act, as amended (19 U.S.C. 81a–81u), and the regulations of the Foreign–Trade Zones Board (15 CFR part 400). It was formally filed on August 7, 2009.

The Swatch facility (56,110 sq. ft., 1 acre, 160 employees) is located at 55 Metro Way, Secaucus, New Jersey. It is used for the receipt, handling, packaging, and distribution of watches, jewelry products, and leather watch cases. All of the products are sourced from abroad and some 10–15% will be exported.

FTZ procedures could exempt Swatch from customs duty payments on the foreign goods exported from the proposed subzone. On domestic sales, the company would be able to defer duty payments until merchandise is shipped from the facility and entered for consumption. Certain logistical/supply chain management efficiencies would also be realized through the use of CBP weekly entry procedures. The application indicates that the savings from FTZ procedures would help improve the facility's international competitiveness.

In accordance with the Board's regulations, Claudia Hausler of the FTZ Staff is designated examiner to evaluate and analyze the facts and information presented in the application and case record and report findings and recommendations to the Board.

Public comment is invited from interested parties. Submissions (original and 3 copies) shall be addressed to the Board's Executive Secretary at the address below. The closing period for their receipt is October 16, 2009. Rebuttal comments in response to material submitted during the foregoing period may be submitted during the subsequent 15-day period to November 2, 2009.

A copy of the application will be available for public inspection at the Office of the Executive Secretary, Foreign–Trade Zones Board, Room 2111, U.S. Department of Commerce, 1401 Constitution Avenue, NW, Washington, DC 20230–0002 and in the ''Reading Room'' section of the Board's Web site, which is accessible via www.trade.gov/ftz. For further information, contact Claudia Hausler at Claudia_Hausler@ita.doc.gov, or (202) 482–1379.

Dated: August 7, 2009.

Andrew McGilvray,

Executive Secretary.

[FR Doc. E9–19677 Filed 8–14–09; 8:45 am]

BILLING CODE 3510–DS–S

DEPARTMENT OF COMMERCE

Foreign-Trade Zones Board

[Order No. 1640]

Grant of Authority for Subzone Status, Hoku Materials, Inc. (Polysilicon), Pocatello, Idaho

Pursuant to its authority under the Foreign–Trade Zones Act of June 18, 1934, as amended (19 U.S.C. 81a–81u), the Foreign–Trade Zones Board (the Board) adopts the following Order:

Whereas, the Foreign–Trade Zones Act provides for '' . . . the establishment . . . of foreign–trade zones in ports of entry of the United States, to expedite and encourage foreign commerce, and for other purposes,'' and authorizes the Foreign–Trade Zones Board to grant to qualified corporations the privilege of establishing foreign–trade zones in or adjacent to U.S. Customs and Border Protection ports of entry;

Whereas, the Board's regulations (15 CFR Part 400) provide for the establishment of special–purpose subzones when existing zone facilities cannot serve the specific use involved, and when the activity results in a significant public benefit and is in the public interest;

Whereas, Boundary County, Idaho, grantee of FTZ 242, has made application to the Board for authority to establish special–purpose subzone status at the polysilicon manufacturing plant of Hoku Materials, Inc., located in Pocatello, Idaho (FTZ Docket 53–2008, filed 10/03/2008, and amended 12/31/2008);

Whereas, notice inviting public comment has been given in the **Federal Register** (73 FR 59597–59598, 10/09/2008); and,

Whereas, the Board adopts the findings and recommendations of the examiner's report, and finds that the requirements of the FTZ Act and the Board's regulations would be satisfied, and that approval of the application, as amended, would be in the public interest, if approval were subject to the condition listed below;

Now, therefore, the Board hereby grants authority for subzone status for activity related to the manufacture of polysilicon at the Hoku Materials, Inc., facility, located in Pocatello, Idaho (Subzone 242A), as described in the application and **Federal Register** notice, subject to the FTZ Act and the Board's regulations, including Section 400.28, and also subject to a restriction prohibiting any admission of silicon metal subject to an antidumping or countervailing duty order.

Signed at Washington, DC, this 5th day of August 2009.

Ronald K. Lorentzen,

Acting Assistant Secretary of Commerce for Import Administration, Alternate Chairman, Foreign–Trade Zones Board.

Attest:

Andrew McGilvray,

Executive Secretary.

[FR Doc. E9–19675 Filed 8–14–09; 8:45 am]

BILLING CODE 3510–DS–S

DEPARTMENT OF COMMERCE

National Oceanic and Atmospheric Administration

RIN 0648–XO99

Incidental Takes of Marine Mammals During Specified Activities; Low-Energy Marine Seismic Survey in the Northwest Atlantic Ocean, August 2009

AGENCY: National Marine Fisheries Service (NMFS), National Oceanic and Atmospheric Administration (NOAA), Commerce.

ACTION: Notice; issuance of an incidental take authorization.

SUMMARY: In accordance with the Marine Mammal Protection Act

(MMPA) regulations, notification is hereby given that NMFS has issued an Incidental Harassment Authorization (IHA) to Rice University (Rice), for the take of small numbers of marine mammals, by Level B harassment only, incidental to conducting a low-energy marine seismic survey in the Northwest Atlantic during August 2009.

DATES: Effective August 12 through September 12, 2009.

ADDRESSES: A copy of the IHA and the application are available by writing to P. Michael Payne, Chief, Permits, Conservation, and Education Division, Office of Protected Resources, National Marine Fisheries Service, 1315 East-West Highway, Silver Spring, MD 20910–3225 or by telephoning the contact listed here.

A copy of the application containing a list of the references used in this document may be obtained by writing to the address specified above, telephoning the contact listed below (see **FOR FURTHER INFORMATION CONTACT**), or visiting the Internet at: *http://www.nmfs.noaa.gov/pr/permits/incidental.htm*. Documents cited in this notice may be viewed, by appointment, during regular business hours, at the aforementioned address.

Documents cited in this notice may be viewed, by appointment, during regular business hours, at the aforementioned address.

FOR FURTHER INFORMATION CONTACT: Howard Goldstein or Jolie Harrison, Office of Protected Resources, NMFS, 301–713–2289.

SUPPLEMENTARY INFORMATION:

Background

Sections 101(a)(5)(A) and (D) of the MMPA (16 U.S.C. 1361 *et seq.*) direct the Secretary of Commerce to allow, upon request, the incidental, but not intentional, taking of marine mammals by United States citizens who engage in a specified activity (other than commercial fishing) within a specified geographical region if certain findings are made and either regulations are issued or, if the taking is limited to harassment, a notice of a proposed authorization is provided to the public for review.

Authorization for incidental taking shall be granted if NMFS finds that the taking will have a negligible impact on the species or stock(s), will not have an unmitigable adverse impact on the availability of the species or stock(s) for subsistence uses, and if the permissible methods of taking and requirements pertaining to the mitigation, monitoring and reporting of such takings are set forth. NMFS has defined ''negligible impact'' in 50 CFR 216.103 as ''...an impact resulting from the specified activity that cannot be reasonably expected to, and is not reasonably likely to, adversely affect the species or stock through effects on annual rates of recruitment or survival.''

Section 101(a)(5)(D) of the MMPA established an expedited process by which citizens of the United States can apply for an authorization to incidentally take small numbers of marine mammals by harassment. Except with respect to certain activities not pertinent here, the MMPA defines ''harassment'' as:

> any act of pursuit, torment, or annoyance which (i) has the potential to injure a marine mammal or marine mammal stock in the wild [''Level A harassment'']; or (ii) has the potential to disturb a marine mammal or marine mammal stock in the wild by causing disruption of behavioral patterns, including, but not limited to, migration, breathing, nursing, breeding, feeding, or sheltering [''Level B harassment''].

Section 101(a)(5)(D) establishes a 45–day time limit for NMFS= review of an application followed by a 30–day public notice and comment period on any proposed authorizations for the incidental harassment of small numbers of marine mammals. Within 45 days of the close of the comment period, NMFS must either issue or deny issuance of the authorization.

Summary of Request

On April 21, 2009, NMFS received an application from Rice for the taking, by Level B harassment only, of small numbers of marine mammals incidental to conducting, under a cooperative agreement with the National Science Foundation (NSF), a low-energy marine seismic survey in the Northwest Atlantic Ocean. The funding for the survey is provided by the NSF. The survey will occur off New England within the U.S Exclusive Economic Zone (EEZ). Seismic operations will occur over the continental shelf southeast of the island of Martha's Vineyard, Massachusetts, and likely also in Nantucket Sound (see Figure 1 of Rice's application). The cruise is currently scheduled to occur from August 12 to 25, 2009. The survey will use two Generator Injector (GI) airguns with a discharge volume of 90 in^3. Some minor deviation from these dates is possible, depending on logistics and weather.

Description of the Specified Activity

Rice plans to conduct a low energy marine seismic survey and bathymetric program. The planned survey will involve one source vessel, the R/V *Endeavor* (*Endeavor*), which will occur in the Northwest Atlantic Ocean off of New England.

The survey will examine stratigraphic controls on freshwater beneath the continental shelf off the U.S. east coast. In coastal settings worldwide, large freshwater volumes are sequestered in permeable continental shelf sediments. Freshwater storage and discharge have been documented off North and South America, Europe, and Asia. The proposed survey will investigate the Atlantic continental shelf off New England, where freshwater extends up to 100 km offshore. Using high-resolution mathematical models and existing data, it is estimated that approximately 1,300 km^3 (312 m1^3) of freshwater is sequestered in the continental shelf from New York to Maine. However, the models indicate that the amount of sequestered freshwater is highly dependent on the thickness and distribution of aquifers and aquicludes. The survey will provide imaging of the subsurface and characterize the distribution of aquifers and aquicludes off Martha's Vineyard.

The study will provide data integral to improved models to estimate the abundance of sequestered freshwater and will provide site survey data for an Integrated Ocean Drilling Program (IODP) proposal to drill these freshwater resources for hydrogeochemical, biological, and climate studies. Combined seismic and drilling data could help identify undeveloped freshwater resources that may represent a resource to urban coastal centers, if accurately characterized and managed. On a global scale, vast quantities of freshwater have been sequestered in the continental shelf and may represent an increasingly valuable resource to humans. This survey will help constrain process-based mathematical models for more precise estimations of the abundance and distribution of freshwater wells on the continental shelf.

The source vessel, the *Endeavor*, will deploy two low-energy GI airguns as an energy source (with a discharge volume of 90 in^3) and a 600 m (1,969 ft) towed hydrophone streamer. The energy to the GI airgun is compressed air supplied by compressors onboard the source vessel. As the GI airgun is towed along the survey lines, the receiving systems will receive the returning acoustic signals.

The planned seismic program will consist of approximately 1,757 km (1,092 mi) of surveys lines and turns (see Figure 1 of Rice's application). Most of the survey effort (approximately 1,638 km or 1,018 mi) will take place in water <100 m deep, and approximately 119 km (74 mi) will occur just past the

shelf edge, in water depths >100 m (328 ft). There may be additional seismic operations associated with equipment testing, start-up, and repeat coverage of any areas where initial data quality is sub-standard.

All planned geophysical data acquisition activities will be conducted with assistance by scientists who have proposed the study, Dr. B. Dugan of Rice University, Dr. D. Lizarralde of Woods Hole Oceanographic Institution, and Dr. M. Person of New Mexico Institute of Mining and Technology. The vessel will be self-contained, and the crew will live aboard the vessel for the entire cruise.

In addition to the seismic operations of the two GI airguns, a Knudsen 3260 echosounder, and EdgeTech sub-bottom profiler, and a ''sparker'' system to image sub-bottom seafloor layers will be used at times during the survey.

Vessel Specifications

The *Endeavor* has a length of 56.4 m (185 ft), a beam of 10.1 m (33.1 ft), and a maximum draft of 5.6 m (18.4 ft). The *Endeavor* has been operated by the University of Rhode Island's Graduate School of Oceanography for over thirty years to conduct oceanographic research throughout U.S. and world marine waters. The ship is powered by a single GM/EMD diesel engine, producing 3,050 hp, which drives a single propeller directly at a maximum of 900 revolutions per minute (rpm). The vessel also has a 320 hp bowthruster, which is not used during seismic acquisition. The optimal operation speed during seismic acquisition will be approximately 7.4 km/hour. When not towing seismic survey gear, the *Endeavor* can cruise at 18.5 km/hour. The *Endeavor* has a range of 14,816 km (9,206 mi). The *Endeavor* will also serve as the platform from which vessel-based Marine Mammal Visual Observers (MMVO) will watch for animals before and during GI airgun operations.

Acoustic Source Specifications

Seismic Airguns

During the proposed survey, the *Endeavor* will tow two GI airguns, with a volume of 90 in^3, and a 600 m long streamer containing hydrophones along predetermined lines. The two GI airguns will be towed approximately 25 m (82 ft) behind the *Endeavor* at a depth of approximately 3 m (10 ft). Seismic pulses will be emitted at intervals of approximately 5 seconds. At a speed of 7.4 km/hour, the 5 second spacing corresponds to a shot interval of approximately 10 m (33 ft). The operating pressure will be 2,000 psi. A single GI airgun will be used during turns.

The generator chamber of each GI airgun, the one responsible for introducing the sound pulse into the ocean, has a volume of 45 in^3. The larger (105 in^3) injector chamber injects air into the previously-generated bubble to maintain its shape, and does not introduce more sound into the water. Both GI airguns will be fired simultaneously, for a total discharge volume of 90 in^3. The GI airguns are relatively small compared to most other airgun arrays used for seismic arrays.

A single GI airgun, a single 15 in^3 watergun, or a sparker system may be used in shallow waters with sandy seafloors if the two GI airguns do not provide accurate seafloor imaging. The watergun is a marine seismic sound source that uses an implosive mechanism to provide an acoustic signal. Waterguns provide a richer source spectra in high frequencies (>200 Hz) than those of GI or airguns. The 15 in^3 watergun potentially provides a cleaner signal for high-resolution studies in shallow water, with a short-pulse (<30 ms) providing resolution of approximately 10 m. The operating pressure will be 2,000 psi. Peak pressure of the single watergun and sparker is estimated to be approximately 212 dB (0.4 bar-m) and 208 dB re 1 μPam (rms), respectively. Thus, both sources would have a considerably lower source level than the two GI airguns and single GI airgun.

The root mean square (rms) received levels that are used as impact criteria for marine mammals are not directly comparable to the peak (pk or 0–pk) or peak-to-peak (pk - pk) values normally used to characterize source levels of airgun arrays. The measurement units used to describe airgun sources, peak or peak-to-peak decibels, are always higher than the ''root mean square'' (rms) decibels referred to in biological literature. A measured received level of 160 dB re 1 μPa (rms) in the far field would typically correspond to a peak measurement of approximately 170 to 172 dB, and to a peak-to-peak measurement of approximately 176 to 178 dB, as measured for the same pulse received at the same location (Greene, 1997; McCauley *et al.*, 1998, 2000). The precise difference between rms and peak or peak-to-peak values depends on the frequency content and duration of the pulse, among other factors. However, the rms level is always lower than the peak or peak-to-peak level for an airgun-type source.

The sound pressure field of two 45 in^3 GI airguns has not been modeled, but those for two 45 in^3 Nucleus G airguns and one 45 in^3 GI airgun have been modeled by Lamont-Doherty Earth Observatory (L-DEO) of Columbia University in relation to distance and direction from the airguns (see Figure 2 and 3 of Rice's application). The GI airgun is essentially two G airguns that are joined head to head. The G airgun signal has more energy than the GI airgun signal, but the peak energy levels are equivalent and appropriate for modeling purposes. The L-DEO model does not allow for bottom interactions, and is most directly applicable to deep water. Based on the modeling, estimates of the maximum distances from GI airguns where sound levels of 190, 180, and 160 dB re 1 μPa (rms) are predicted to be received in deep (≤1,000 m) water are shown in Table 1 of Rice's application. Because the model results are for G airguns, which have more energy than GI airguns of the same size, those distances are overestimates of the distances for the 45 in^3 GI airguns.

Echosounder

The Knudsen 3260 is a deep-water, dual-frequency echosounder with operating frequencies of 3.5 and 12 kHz. The high frequency (12 kHz) can be used to record water depth or to track pingers attached to various instruments deployed over the side. The low frequency (3.5 kHz) is used for sub-bottom profiling. Both frequencies will be used simultaneously during the present study. It will be used with a hull-mounted, downward-facing transducer. A pulse up to 24 ms in length is emitted every several seconds with a nominal beam width of 80. Maximum output power at 3.5 kHz is 10 kW and at 12 kHz it is 2 kW. The maximum source output (downward) for the 3260 is estimated to be 211 dB re 1 μPam at 10 kW.

Sub-bottom Profiler (SBP)

The SBP is normally operated to provide information about sedimentary features and bottom topography; it will provide a 10 cm resolution of the sub-floor. During operations in deeper waters (>30–40 m), an EdgeTech 3200–XS SBP will be operated from the ship with a SB–512i towfish that will be towed at a depth of 5 m. It will transmit and record a 0.5–12 kHz swept pulse (or chirp), with a nominal beam width of 16–32. The SBP will produce a 30 ms pulse repeated at 0.5 to 1 s intervals. Depending on seafloor conditions, it could penetrate up to 100 m.

Sparker

The ''sparker'' system will be an alternative source of sub-floor imaging in shallower waters (<30 to 40 m or 98

to 131 ft). Source level information from the manufacturer of a comparable system, the Applied Acoustics Engineering, Inc. SQUID 2000 sparker system, gives a sound pressure level of 208 dB re 1 μPam (rms) at 1,500 Joules. The frequency output pulse for the SIG 2mille sparker system using the SIG sparker-electrode ELC820 is between 800 and 850 Hz with pulse duration of approximately 1 ms. The trigger rate depends on the output power used; the rates go from 250 ms to 2.0 s. It is likely that the data collection for these projects will be accomplished using a 0.5 s or 1.0 s trigger rate with output power between 200 and 500 Joules. The Applied Acoustics CSP 700 sparker is a 100 to 700 Joule system. The sound pressure level for this system is 200 dB re 1 μPam (rms) at 500 Joules. The trigger rate depends on the output power used; the rates go from 250 ms to 1 s. It is likely that the data collection for these projects will be accomplished using a 0.5 s or 1 s trigger rate with output power between 200 and 500 Joules. This will also use the SIG sparker-electrode model ELC820 that has an output frequency between 800 and 850 Hz with a pulse duration of approximately 1 ms.

Safety Radii

NMFS has determined that for acoustic effects, using acoustic thresholds in combination with corresponding safety radii is the most effective way to consistently apply measures to avoid or minimize the impacts of an action, and to quantitatively estimate the effects of an action. Thresholds are used in two ways: (1) to establish a mitigation shut-down or power-down zone, i.e., if an animal enters an area calculated to be ensonified above the level of an established threshold, a sound source is powered down or shut down; and (2) to calculate take, in that a model may be used to calculate the area around the sound source that will be ensonified to that level or above, then, based on the estimated density of animals and the distance that the sound source moves, NMFS can estimate the number of marine mammals that may be ''taken.''

As a matter of past practice and based on the best available information at the time regarding the effects of marine sound compiled over the past decade, NMFS has used conservative numerical estimates to approximate where Level A harassment from acoustic sources begins: 180 re 1 μPa (rms) level for cetaceans and 190 dB re 1 μPa (rms) for pinnipeds. A review of the available scientific data using an application of science-based extrapolation procedures (Southall *et al.*, 2007) strongly suggests that Level A harassment (as well as TTS) from single exposure impulse events may occur at much higher levels than the levels previously estimated using very limited data. However, for purposes of this proposed action, Rice's application sets forth, and NMFS is using, the more conservative 180 and 190 dB re 1 μPa (rms) criteria. NMFS considers 160 re 1 μPa (rms) as the criterion for estimating the onset of Level B harassment from acoustic sources like impulse sounds used in the seismic survey.

Emperical data concerning the 180 and 160 dB distances have been acquired based on measurements during the acoustic verification study conducted by L-DEO in the northern Gulf of Mexico from May 27 to June 3, 2003 (Tolstoy *et al.*, 2004a,b). Although the results are limited the data showed that radii around the airguns where the received level would be 180 dB re 1 μPa (rms), the safety criterion applicable to cetaceans (NMFS, 2000), vary with water depth. Similar depth-related variation is likely in the 190 dB distances applicable to pinnipeds. Correction factors were developed for water depths 100–1,000 m and <100 m; the proposed survey will occur in depths approximately 20 to 125 m.

The empirical data indicate that, for deep water (≤1,000 m), the L-DEO model tends to overestimate the received sound levels at a given distance (Tolstoy *et al.*, 2004a,b). However, to be precautionary pending acquisition of additional empirical data, it is proposed that safety radii during GI airgun operations in deep water will be values predicted by L-DEO's model (see Table 1 below). Therefore, the assumed 180 and 190 dB radii are 40 m (131 ft) and 10 m (33 ft) respectively.

Empirical measurements were not conducted for intermediate depths (100–1,000 m). On the expectation that results will be intermediate between those from shallow and deep water, a 1.5x correction factor is applied to the estimates provided by the model for deep water situations. This is the same factor that was applied to the model estimates during L-DEO cruises in 2003. The assumed 180 and 190 dB radii in intermediate depth water are 60 m (197 ft) and 15 m (49 ft), respectively (see Table 1 below).

Empirical measurements indicated that in shallow water (<100 m), the L-DEO model underestimates actual levels. In previous L-DEO projects, the exclusion zones were typically based on measured values and ranged from 1.3 to 15x higher than the modeled values depending on the size of the airgun array and the sound level measured (Tolstoy *et al.*, 2004a,b). During the proposed cruise, similar factors will be applied to derive appropriate shallow water radii from the modeled deep water radii (see Table 1 below). The assumed 180 and 190 dB radii in shallow depth water are 296 m (971 ft) and 147 m (482 ft), respectively (see Table 1 below).

TABLE 1. PREDICTED DISTANCES TO WHICH SOUND LEVELS ≥190, 180, AND 160 DB RE 1 μPA MIGHT BE RECEIVED IN SHALLOW (<100 M; 328 FT), INTERMEDIATE (100–1,000 M; 328–3,280 FT), AND DEEP (>1,000 M; 3,280 FT) WATER FROM THE SINGLE 45 IN^3 GI AIRGUN USED DURING THE SEISMIC SURVEYS IN THE NORTHEASTERN PACIFIC OCEAN DURING JULY 2009. DISTANCES ARE BASED ON MODEL RESULTS PROVIDED BY L-DEO.

Source and Volume	Tow Depth (m)	Water Depth	Predicted RMS Distances (m)		
			190 dB	180 dB	160 dB
One GI airgun 45 in^3	3	Deep (>1,000 m)	8	23	220
		Intermediate (100–1,000 m)	12	35	330
		Shallow (< 100 m)	95	150	570
Two GI airgun 45 in^3	3	Deep (>1,000 m)	10	40	350

TABLE 1. PREDICTED DISTANCES TO WHICH SOUND LEVELS ≥190, 180, AND 160 DB RE 1 μPA MIGHT BE RECEIVED IN SHALLOW (<100 M; 328 FT), INTERMEDIATE (100–1,000 M; 328–3,280 FT), AND DEEP (>1,000 M; 3,280 FT) WATER FROM THE SINGLE 45 IN^3 GI AIRGUN USED DURING THE SEISMIC SURVEYS IN THE NORTHEASTERN PACIFIC OCEAN DURING JULY 2009. DISTANCES ARE BASED ON MODEL RESULTS PROVIDED BY L-DEO.—Continued

Source and Volume	Tow Depth (m)	Water Depth	Predicted RMS Distances (m)		
			190 dB	180 dB	160 dB
		Intermediate (100–1,000 m)	15	60	525
		Shallow (< 100 m)	147	296	1,029

Table 1. Predicted distances to which sound levels ≥190, 180, and 160 dB re 1 μPa might be received in shallow (<100 m; 328 ft), intermediate (100–1,000 m; 328–3,280 ft), and deep (>1,000 m; 3,280 ft) water from the two 45 in^3 GI airguns used during the seismic surveys in the northwest Atlantic Ocean during August 2009, and one 45 in^3 GI airgun that will be used during turns. Distances are based on model results provided by L-DEO.

The GI airguns, watergun, or sparker will be shut-down immediately when cetaceans are detected within or about to enter the 180 dB re 1 μPa (rms) radius for the two GI airguns, or when pinnipeds are detected within or about to enter the 190 dB re 1 μPa (rms) radius for the two GI airguns. The 180 and 190 dB shut down criteria are consistent with guidelines listed for cetaceans and pinnipeds, respectively, by NMFS (2000) and other guidance by NMFS.

Dates, Duration, and Region of Activity

The *Endeavor* is expected to depart from Narragansett, Rhode Island on approximately August 12, 2009, for an approximately four-hour transit to the study area southeast of Martha's Vineyard (see Figure 1 of Rice's application). Seismic operations will commence upon arrival at the study area, with highest priority given to the central NNW-SSE line, followed by WSW-ENE lines, each of which cross the proposed IODP sites; lowest priority will be given to the survey lines in Nantucket Sound. The 14–day program will consist of approximately 11 days of seismic operations, and three contingency days in case of inclement weather. The *Endeavor* will return to Narragansett on approximately August 25, 2009. The exact dates of the proposed activities depend on logistics, weather conditions, and the need to repeat some lines if data quality is substandard.

The proposed seismic survey will encompass the area 39.8° to 41.5° N, 69.8° to 70.6° W (see Figure 1 of Rice's application). Water depths in the study area range from approximately 20 to 125 m (66 to 410 ft), but are typically <100 m. The proposed survey will take place in Nantucket Sound and south of Nantucket and Martha's Vineyard. The ship will approach the south shore of Martha's Vineyard within 10 km (6.2 mi). The seismic survey will be conducted within the Exclusive Economic Zone (EEZ) of the U.S.A.

Comments and Responses

A notice of receipt of the Rice application and proposed IHA was published in the **Federal Register** on June 18, 2009 (74 FR 28890). During the comment period, NMFS received comments from the Marine Mammal Commission (Commission). Following are comments from the Commission, and NMFS' responses.

Comment 1: The Commission recommends that NMFS issue the requested authorization, provided that the authorization include all of the proposed monitoring and mitigation measures to minimize the likelihood of serious injury to the potentially affected marine mammal species.

Response: NMFS concurs with the Commission's recommendation and has included requirements to these effects in the IHA issued to Rice.

Comment 2: The Commission recommends that NMFS issue the requested authorization, provided that NMFS (1) clarify when the use of night vision devices (NVD) will be required and provide additional justification for its implied conclusion that observers will be able to achieve a high nighttime detection rate, and (2) require the use of passive acoustic monitoring (PAM) during all operations.

Response: (1) Though it depends on the lights on the ship, the sea state, and thermal factors, MMVOs estimated that visual detection is effective out to between 150 and 250 m using NVDs and about 30 m with the naked eye (dolphins, porpoises, pinnipeds, and large whales are the species likely to be detected in the shallow and intermediate water depths, where the safety zones are the largest). Marine seismic surveys may continue into night and low-light hours if such segment(s) of the survey are initiated when the entire relevant safety zones are visible and can be effectively monitored. No initiation of airgun array operations is permitted from a shut-down position at night or during low-light hours (such as in dense fog or heavy rain) when the entire relevant safety zone cannot be effectively monitored by the MMVOs on duty. NMFS has included a requirement to this effect in the IHA issued to Rice; and

(2) PAM remains as optional, but willingly used as supplemental effort specific to the R/V *Marcus G. Langseth*. The use of PAM in any situation as a ''required'' mitigation measure is addressed as premature in NSF's draft Programmatic Environmental Impact Statement. NMFS recommends that applicants seeking an Incidental Take Authorization use PAM for monitoring and mitigation purposes whenever possible.

Comment 3: The Commission recommends that NMFS issue the requested authorization, provided that the authorization require that the monitoring period be extended to at least one hour before seismic activities are initiated or to at least one hour before airgun activities are resumed after a power-down because of a marine mammal sighting within the safety zone.

Response: As the Commission points out, several species of cetaceans that occur in the study area are capable of remaining underwater for more than 30 minutes. However, for the following reasons, NMFS believes that 30 minutes is an adequate length for the monitoring period prior to the start-up of airguns: (1) because the *Endeavor* is required to ramp-up; (2) in many cases MMOs are making observations during times when the sound sources are not being operated and will actually be observing the area prior to the start-up observation period anyway; (3) many of the species that may be exposed do not stay underwater more than 30 min; and (4) all else being equal and if a deep-diving individual happened to be in the area in

the short time immediately prior to the pre-start-up monitoring, if an animal's maximum underwater time is 45 min, there is only a one in three chance that its last random surfacing would be prior to the beginning of the required monitoring period.

Also, seismic vessels are moving continuously (because of the towed array and airguns) and NMFS believes that unless the animals submerges and follows at the speed of the vessel (highly unlikely, especially when considering that a significant part of their movements is vertical [deep-diving]), the vessel will be far beyond the length of the safety radii within 30 min, and therefore it will be safe to start the airguns again.

Comment 4: The Commission recommends that NMFS issue the requested authorization, provided that the applicant carry out observations of all instances where ramp-up is employed to gather data on its effectiveness as a mitigation measure.

Response: The IHA requires that MMVOs on the *Endeavor* make observations prior to ramp-up, during all ramp-ups, and during all daytime seismic operations and record the following information when a marine mammals is sighted:

(i) Species, group size, age/size/sex categories (if determinable), behavior when first sighted and after initial sighting, heading (if consistent), bearing and distance from seismic vessel, sighting, cue, apparent reactions to the airguns or vessel (e.g., none, avoidance, approach, paralleling, etc., and including responses to ramp-up), and behavioral pace; and

(ii) Time, location, heading, speed, activity of the vessel (including number of airguns operations and whether in state of ramp-up or power-down), sea state, visibility, cloud cover, and sun glare.

These requirements should provide information regarding the effectiveness of ramp-up as a mitigation measure, provided animals are detecting during ramp-up. NMFS has included a requirement to this effect in the IHA issued to Rice.

Comment 5: The Commission recommends that NMFS issue the requested authorization, provided that the authorization require that operations be suspended immediately, pending review by NMFS, if a dead or seriously injured marine mammal is found in the vicinity of the operations and the death or injury could have occurred incidental to the seismic survey.

Response: NMFS has included a requirement to this effect in the IHA issued to Rice.

Description of Marine Mammals in the Proposed Activity Area

A total of 34 marine mammal species (30 cetacean and 4 pinniped) are known to or may occur in the proposed study area (see Table 2, Waring *et al.*, 2007). Several species are listed as Endangered under the Endangered Species Act (ESA): the North Atlantic right, humpback, sei, fin, blue, and sperm whales. The Western North Atlantic Coastal Morphotype Stock of common bottlenose dolphins is listed as Depleted under the MMPA.

Table 2 below outlines the marine mammal species, their habitat, abundance, density, and conservation status in the proposed project area. Additional information regarding the distribution of these species expected to be found in the project area and how the estimated densities were calculated may be found in the notice of the proposed IHA (74 FR 28890, June 18, 2009) and may be found in Rice's application.

BILLING CODE 3510–22–22–S

Table 2. The occurrence, habitat, regional abundance, conservation status, best and maximum density estimates, number of marine mammals that could be exposed to sound level at or above 160dB re 1μPa, best estimate of number of individuals exposed, and best estimate of number of exposures per marine mammal in or near the proposed low-energy seismic survey area in the Northwest Atlantic Ocean. See Tables 2-4 in Rice's application for further detail.

Species	Habitat	Regional Best Abundance Est. (CV) [1]	Density/ 1000km² (best)	Density/ 1000km² (max)	Number of Indiv. Exposed to ≥160 dB	Percent of Estimated Population Exposed to ≥160 dB
Mysticetes North Atlantic right whale (Eubalaena glacialis)	Coastal and shelf waters	325 (0)[2]	N.A.	N.A.	0	0
Humpback whale (Megaptera novaeangliae)	Mainly nearshore waters and banks	11,570[3]	0.56	19.68	2	0.02
Minke whale (Balaenoptera acutorostrata)	Pelagic and coastal	188,000[4]	0.05	7.35	0	0
Bryde's whale (Balaenoptera brydei)	Primarily offshore, pelagic	N.A.	N.A.	N.A.	0	0
Sei whale (Balaenoptera borealis)	Primarily offshore, pelagic	10,300[5]	N.A.	N.A.	0	0
Fin whale (Balaenoptera physalus)	Continental slope, mostly pelagic	35,500[6]	3.86	26.09	11	0.03
Blue whale (Balaenoptera musculus)	Pelagic, shelf and coastal	1,186[7]	N.A.	N.A.	0	0
Odontocetes Sperm whale (Physeter macrocephalus)	Usually pelagic and deep seas	13,190[8]	0.38	26.88	2	0.02
Pygmy sperm whale (Kogia breviceps)	Deep waters off shelf	N.A.	N.A.	N.A.	0	0
Dwarf sperm whale (Kogia sima)	Deep waters off the shelf	N.A.	N.A.	N.A.	0	0
Cuvier's beaked whale (Ziphius cavirostris)	Pelagic	N.A.	N.A.	N.A.	0	0
Northern bottlenose whale (Hyperodon ampullatus)	Pelagic	40,000[9]	N.A.	N.A.	0	0
True's beaked whale (Mesoplodon mirus)	Pelagic	N.A.	N.A.	N.A.	0	0

Gervais' beaked whale (Mesopldon europaeus)	Pelagic	N.A.	N.A.	N.A.	0	0
Sowerby's beaked whale (Mesoplodon bidens)	Pelagic	N.A.	N.A.	N.A.	0	0
Blainville's beaked whale (Mesoplodon densirostris)	Pelagic	N.A.	N.A.	N.A.	0	0
Unidentified beaked whale	Pelagic	N.A.	0.01	0.82	0	0
Bottlenose dolphin (Tursiops truncatus)	Coastal, shelf and offshore	81,588 (0.17)[10]	14.02	163.02	39	0.05
Pantropical spotted dolphin (Stenella attenuata)	Coastal and pelagic	N.A.	N.A.	N.A.	0	0
Atlantic spotted dolphin (Stenella frontalis)	Mainly coastal waters	50,978 (0.42)	N.A.	N.A.	0	0
Spinner dolphins (Stenella longirostris)	Coastal and pelagic	N.A.	N.A.	N.A.	0	0
Striped dolphin (Stenella coeruleoalba)	Off continental shelf	94,462 (0.40)	0.11	73.61	0	0
Short-beaked common dolphin (Delphinus delphis)	Continental shelf and pelagic	120,743 (0.23)	128.88	1,108.71	349	0.17
White-beaked dolphin (Lagenorhynchus albirostris)	Continental shelf (<200 m)	10s to 100s of 1,000s[11]	N.A.	N.A.	0	0
Atlantic white-sided dolphin (Lagenorhynchus acutus)	Shelf and slope waters	10s to 100s of 1,000s[12]	N.A.	N.A.	0	0
Risso's dolphin (Grampus griseus)	Shelf, slope, seamounts (waters 400-1,000 m)	20,479 (0.59)	0.48	322.67	2	0.01
False killer whale (Pseudorca crassidens)	Tropical, temperate, pelagic	N.A.	N.A.	N.A.	0	0
Killer whale (Orcinus orca)	Coastal, widely distributed	N.A.	N.A.	N.A.	0	0
Long-finned pilot whale (Globlicephala melas)	Mostly pelagic	810,000[13]	N.A.	N.A.	N.A.	N.A.
Short-finned pilot whale (Globicephala macrorhynchus)	Mostly pelagic, high-relief topography	810,000[13]	N.A.	N.A.	N.A.	N.A.

Unidentified pilot whale (Globicephala sp.)	Mostly pelagic	810,000[13]	6.44	382.52	10	<0.01
Harbor porpoise (Phocoena phocoena)	Coastal and inland waters	500,000[14]	N.A.	N.A.	0	0
Pinnipeds Harbor seal (Phoca vitulina)	Coastal	99,340	N.A.	N.A.	10	0.01
Gray seal (Halichoerus grypus)	Coastal	52,500[15]	N.A.	N.A.	5	<0.01
Harp seal (Pagophilius groenlandicus)	Coastal	5,500,000[16]	N.A.	N.A.	0	N.A.
Hooded seal (Cystophora cristata)	Coastal	592,100[17]	N.A.	N.A.	0	N.A.

N.A. – Data not available or species status was not assessed, ? indicated uncertainty
[a] U.S. Endangered Species Act: EN = Endangered, T = Threatened, NL = Not listed
[1] Abundance estimates are given from Waring et al. (2007), typically for U.S. Western North Atlantic stocks unless otherwise indicated; For species whose distribution is primarily offshore or not known, the estimates for the U.S. EEZ in Waring et al. (2007) are not considered for the study area and the regional population is given as N.A. unless it is available from another source.
[2] Estimate updated in NMFS 2008 draft stock assessment report.
[3] Estimate for the western North Atlantic (IWS, 2007a).
[4] Estimate for the North Atlantic (IWC, 2007; Waring et al., 2007).
[5] Estimate for the Northeast Atlantic (Cattanach et al., 1993).
[6] Estimate for the North Atlantic (IWC, 2007a; Waring et al., 2007).
[7] Estimate for the North Atlantic (NMFS, 1998).
[8] Estimate for Northeast Atlantic (Whitehead, 2002).
[9] Estimate for Northeast Atlantic (NAAMCO, 1995: 77).
[10] Estimate for the Western North Atlantic and Offshore stock, and may include coastal forms. 43,951 animals estimated for all management units of the Coastal morphotype (Waring et al., 2007).
[11] Tens to low hundreds of thousands (Reeves et al., 1999a).
[12] High tens to low hundreds of thousands (Reeves et al., 1999b).
[13] Estimate may include both long- and short-finned pilot whales.
[14] Estimate for the North Atlantic (Jefferson et al., 2008)
[15] Estimate for the northwest Atlantic Ocean in the Gulf of St. Lawrence and along the Nova Scotia eastern shore (Hammill, 2005).
[16] Estimate for the northwest Atlantic Ocean (DFO, 2007).
[17] Estimate for the northwest Atlantic Ocean (ICES, 2006).
* Southern Resident killer whales in the eastern Pacific Ocean, near Washington state, are listed as endangered under the ESA, but not in the Atlantic Ocean.
^ The Western North Atlantic Coastal Morphotype stock, ranging from NJ to FL, is listed as depleted under the MMPA.

BILLING CODE 3510–22–C

Several Federal Marine Protected Areas (MPAs) or sanctuaries have been established near the proposed study area, primarily with the intention of preserving cetacean habitat (see Table 3 of Rice's application; Hoyt, 2005; Cetacean Habitat, 2009; see also Figure 1 of Rice's application). Cape Cod Bay is designated as Right Whale Critical Habitat, as is the Great South Channel Northern Right Whale Critical Habitat Area located to the east of Cape Cod. The Gerry E. Studds Stellwagen Bank National Marine Sanctuary is located north of the proposed study are in the Gulf of Maine. The proposed survey is not located within any Federal MPAs or sanctuaries. However, a sanctuary designated by the state of Massachusetts occurs within the study area - the Cape and Islands Ocean Sanctuary. This sanctuary includes nearshore waters of southern Cape Cod, Martha's Vineyard, and Nantucket (see Table 3 of Rice's application). In addition, there are four National Wildlife Refuges within the study area (Monomoy, Nantucket, Mashpee, and Nomans Island) and a National Estuarine Research Reserve (Waquoit Bay). Except for Nomans Island, these refuges and reserves are located in Nantucket Sound. Three Canadian protected areas also occur in the Northwest Atlantic for cetacean habitat protection, including the Bay of Fundy and Roseway Basin Right Whale Conservation Areas (see Figure 1 of Rice's application), as well as the Gully Marine Protected Area off the Scotian Shelf.

There are several areas that are closed to commercial fishing on a seasonal basis to reduce the risk of entanglement or incidental mortality to marine mammals. To protect large whales like right, humpback, and fin whales, NMFS implemented seasonal area management zones for lobster, several groundfish, and other marine invertebrate trap/pot fisheries, prohibiting gear in the Great South Channel Critical Habitat Area from April through June; additional dynamic area management zones could be imposed for 15 day time periods if credible fisheries observers identify concentrations of right whales in areas north of 40 N (NMFS 1999, 2008). To reduce fishery impacts on harbor porpoises, additional time and area closures in the Gulf of Maine include fall and winter along the mid-coastal area, winter and spring in Massachusetts Bay and southern Cape Cod, winter and spring in offshore areas, and February around Cashes Ledge (NMFS, 1998). Fishermen are also required to use pingers, and New Jersey and mid-Atlantic waters could close seasonally for fishermen failing to apply specific gear modifications (NMFS, 1998).

Potential Effects on Marine Mammals

Potential Effects of Airguns

The effects of sounds from airguns might result in one or more of the following: tolerance, masking of natural sounds, behavioral disturbances, temporary or permanent hearing impairment, and non-auditory physical or physiological effects (Richardson *et al.*, 1995; Gordon *et al.*, 2004; Nowacek *et al.*, 2007; Southall *et al.*, 2007). Permanent hearing impairment, in the unlikely event that it occurred, would constitute injury, but temporary threshold shift (TTS) is not an injury (Southall *et al.*, 2007). Although the possibility cannot be entirely excluded, it is unlikely that the project would result in any cases of permanent hearing impairment, or any significant non-auditory physical or physiological effects. Some behavioral disturbance is expected, but this would be localized and short-term.

The notice of the proposed IHA (74 FR 28890, June 18, 2009) included a discussion of the effects of sounds from airguns on mysticetes, odontocetes, and pinnipeds, including tolerance, masking, behavioral disturbance, hearing impairment, and other non-auditory physical effects. Additional information on the behavioral reactions (or lack thereof) by all types of marine mammals to seismic vessels can be found in Rice's application and associated EA.

The notice of the proposed IHA also included a discussion of the potential effects of the echosounder and sub-bottom profiler. Because of the shape of the beams of these sources and their power, NMFS believes it unlikely that marine mammals will be exposed to either the echosounder or sub-bottom profiler at levels at or above those likely to cause harassment. Further, NMFS believes that the brief exposure of cetaceans to a few signals from the echosounder or sub-bottom profiler sonar systems is not likely to result in the harassment of marine mammals.

Estimated Take by Incidental Harassment

The notice of the proposed IHA (74 FR 28890, June 18, 2009) included an in-depth discussion of the methods used to calculate the densities of the marine mammals in the area of the seismic survey and the take estimates. Additional information was included in Rice's application. A summary is included here.

All anticipated takes would be ''takes by harassment,'' involving temporary changes in behavior. The monitoring and mitigation measures are expected to minimize the possibility of injurious takes. (However, as noted earlier and in Appendix A of Rice's application, there is no specific information demonstrating that injurious ''takes'' would occur even in the absence of the planned monitoring and mitigation measures.) The sections below describe methods to estimate ''take by harassment'', and present estimates of the numbers of marine mammals that might be affected during the proposed seismic program in the Northwest Atlantic Ocean. The estimates of ''take by harassment'' are based on (1) cetacean densities (numbers per unit area) obtained during aerial surveys off New England during 2002 and 2004 by NMFS Northeast Fisheries Science Center (NEFSC), and (2) estimates of the size of the area where effects could potentially occur. Few, if any, pinnipeds are expected to be encountered during the proposed survey in the summer.

The following estimates are based on a consideration of the number of marine mammals that might be disturbed appreciably by operations with the GI airgun to be used during approximately 1,757 line km (1,092 mi) of surveys (including turns) off the New England coast. The anticipated radii of influence of the other sound sources (i.e., SBP, sparker system, and echosounder) are less than those for the GI airguns. It is assumed that, during simultaneous operations of the GI airguns and other sound sources, any marine mammals close enough to be affected by the other sound sources would already be affected by the GI airguns. However, whether or not the GI airguns are operating simultaneously with the other sound sources, marine mammals are expected to exhibit no more than short-term and inconsequential responses to the other sound sources given their characteristics (e.g., narrow downward-directed beam in the echosounder). Therefore, no additional allowance is included for animals that could be affected by the other sound sources.

Extensive systematic aircraft and ship-based surveys have been conducted for marine mammals offshore from New England (e.g., see Palka, 2006). Those that were conducted in the proposed seismic survey area were used for density estimates. Oceanographic conditions influence the distribution and numbers of marine mammals present in the study area, resulting in year-to-year variation in the distribution and abundance of many marine mammal species. Thus, for some species the densities derived from these surveys may not be representative of the densities that will be encountered during the proposed seismic survey. To provide some allowance for these uncertainties, ''maximum estimates'' as well as ''best estimates'' of the numbers potentially affected have been derived. Best and maximum estimates are based on the average and maximum estimates of densities calculated from the appropriate densities reported by Palka (2006).

Table 4 of Rice's application gives the average and maximum densities for each species of cetacean reported in the proposed survey area off New England, corrected for effort, based on the densities as described above. The densities from those studies had been corrected, by the original authors, for both detectability bias and availability bias. Detectability bias associated with diminishing sightability with increasing lateral distance from the tracklines [f(0)]. Availability bias refers to the fact that there is less-than–100–percent probability of sighting an animal that is present along the survey trackline, and it is measured by g(0).

It should be noted that the following estimates of ''takes by harassment'' assume that the surveys will be undertaken and completed. As is typical on offshore ship surveys, inclement weather, and equipment malfunctions are likely to cause delays and may limit the number of useful line kms of seismic operations that can be undertaken. Furthermore, any marine mammal

sightings within or near the designated safety zones will result in the shut-down of seismic operations as a mitigation measure. Thus, the following estimates of the numbers of marine mammals potentially exposed to 160 dB sounds are precautionary, and probably overestimate the actual numbers of marine mammals that might be involved. These estimates assume that there will be no weather, equipment, or mitigation delays, which is highly likely.

There is some uncertainty about the representativeness of the data and the assumptions used in the calculations. However, the approach used is believed to be the best available approach. Also, to provide some allowance for these uncertainties ''maximum estimates'' as well as ''best estimates'' of the numbers potentially affected have been derived. The estimated number of potential individuals exposed are presented below based on the 160 dB re 1 μPa (rms) criterion for all cetaceans and pinnipeds. It is assumed that a marine mammal exposed to airgun at that received level might change their behavior sufficiently to be considered ''taken by harassment.''

The number of different individuals that may be exposed to GI airgun sounds with received levels ≥160 dB re 1 μPa (rms) on one or more occasions was estimated by considering the total marine area that would be within the 160–dB radius around the operating airgun array on at least one occasion. The seismic lines do not run parallel to each other in close proximity, which minimizes the number of times an individual mammal may be exposed during the survey. Table 5 of Rice's application shows the best and maximum estimates of the number of marine mammals that could potentially be affected during the seismic survey.

The number of different individuals potentially exposed to received levels ≥160 dB re 1 μPa (rms) was calculated by multiplying:

- The expected species density, either ''mean'' (i.e., best estimate) or ''maximum,'' times;
- The anticipated area to be ensonified to that level during GI airgun operations.

The area expected to be ensonified was determined by entering the planned survey lines into a MapInfo Geographic Information System (GIS), using the GIS to identify the relevant areas by ''drawing'' the applicable 160 dB buffer around each seismic line (two GI airgun buffer) and turns (one GI airgun buffer) (depending on water and tow depth) and then calculating the total area within the buffers. Areas where overlap occurred (because of intersecting lines) were included only once to determine the area expected to be ensonified.

Applying the approach described above, approximately 2,877 km² (1,111 mi²) would be within the 160 dB isopleth on one or more occasions during the survey. This approach does not allow for ''turnover'' in the mammal populations in the study area during the course of the studies. That might underestimate actual numbers of individuals exposed, although the conservative distances used to calculate the area may offset this. In addition, the approach assumes that no cetaceans will move away or toward the trackline as the *Endeavor* approaches in response to increasing sound levels prior to the time the levels reach 160 dB. Another way of interpreting the estimates that follow is that they represent the number of individuals that are expected (in the absence of a seismic survey) to occur in the waters that will be exposed to μ160 dB re 1 μPa (rms).

Table 3 (see below) outlines the species, estimated stock population (minimum and best), and estimated percentage of the stock exposed to seismic pulses in the project area. Additional information regarding status, abundance, and distribution of the marine mammals in the area and how densities were calculated was included in Table 2 (see above), the notice of the proposed IHA (74 FR 28890) and may be found in Rice's application.

TABLE 3. THE ESTIMATES OF THE POSSIBLE NUMBERS OF MARINE MAMMALS EXPOSED TO SOUND LEVELS GREATER THAN OR EQUAL TO 160 DB DURING RICE'S PROPOSED SEISMIC SURVEY OFF THE COAST OF NEW ENGLAND IN AUGUST 2009. THE PROPOSED SOUND SOURCE IS A SINGLE GI AIRGUN. RECEIVED LEVELS ARE EXPRESSED IN DB RE 1 μPA (RMS) (AVERAGED OVER PULSE DURATION), CONSISTENT WITH NMFS' PRACTICE. NOT ALL MARINE MAMMALS WILL CHANGE THEIR BEHAVIOR WHEN EXPOSED TO THESE SOUND LEVELS, BUT SOME MAY ALTER THEIR BEHAVIOR WHEN LEVELS ARE LOWER (SEE TEXT). SEE TABLES 3–5 IN RICE'S APPLICATION FOR FURTHER DETAIL.

Species	# of Individuals Exposed (best)[1]	# of Individuals Exposed (max)[1]	Approx. % Regional Population (best)[2]
Mysticetes			
Nort Atlantic right whale[3] *(Eubalena glacialis)*	0	0	0
Humpback whale (Megaptera novaeangliae)	2	57	0.02
Minke whale(*Balaenoptera acutorostrata*)	0	21	<0.01
Bryde's whale (*Balenoptera brydei*)	0	0	0
Sei whale(*Balaenoptera borealis*)	0	0	0
Fin whale (*Balaenoptera physalus*)	11	75	0.02
Blue whale (*Balaenoptera musculus*)	0	0	0
Odontocetes			

TABLE 3. THE ESTIMATES OF THE POSSIBLE NUMBERS OF MARINE MAMMALS EXPOSED TO SOUND LEVELS GREATER THAN OR EQUAL TO 160 dB DURING RICE'S PROPOSED SEISMIC SURVEY OFF THE COAST OF NEW ENGLAND IN AUGUST 2009. THE PROPOSED SOUND SOURCE IS A SINGLE GI AIRGUN. RECEIVED LEVELS ARE EXPRESSED IN dB RE 1 μPA (RMS) (AVERAGED OVER PULSE DURATION), CONSISTENT WITH NMFS' PRACTICE. NOT ALL MARINE MAMMALS WILL CHANGE THEIR BEHAVIOR WHEN EXPOSED TO THESE SOUND LEVELS, BUT SOME MAY ALTER THEIR BEHAVIOR WHEN LEVELS ARE LOWER (SEE TEXT). SEE TABLES 3–5 IN RICE'S APPLICATION FOR FURTHER DETAIL.—Continued

Species	# of Individuals Exposed (best)[1]	# of Individuals Exposed (max)[1]	Approx. % Regional Population (best)[2]
Sperm whale (*Physeter macrocephalus*)	2	77	0.02
Pygmy sperm whale (*Kogia breviceps*)	0	0	0
Dwarf sperm whale (*Kogia sima*)	0	0	0
Cuvier's beaked whale (*Ziphius cavirostris*)	0	0	0
Northern bottlenose whale (*Hyperodon ampullatus*)	0	1	0
True's beaked whale(*Mesoplodon mirus*)	0	0	0
Gervais' beaked whale (*Mesoplodon europaeus*)	0	0	0
Sowerby's beaked whale (Mesoplodon bidens)	0	1	0
Blainville's beaked whale (Mesoplodon densirostris)	0	0	0
Unidentified beaked whale	0	2	N.A.
Bottlenose dolphin[3] (*Tursiops truncatus*)	39	4,700	0.05
Pantropical spotted dolphin (*(Stenella attenuata)*)	0	0	0
Atlantic spotted dolphin (*(Stenella frontalis)*)	0	0	0
Spinner dolphins (*(Stenella longirostris)*)	0	0	0
Striped dolphin (*Stenella coeruleoalba*)	0	212	<0.01
Common dolphin (*Delphinu*) sp.	349	3,189	<0.17
White-beaked dolphin (*(Lagenorhynchus albirostris)*)	0	0	0
Atlantic white-sided dolphin[5] *Lagenorhynchus acutus*)	0	0	0
Risso's dolphin (*Grampus griseus*)	2	929	0.01
False killer whale (*Pseudorca crassidens*)	0	0	0
Killer whale (*Orcinus orca*)	0	0	0
Long-finned pilot whale (*(Globlicephala melas)*)	N.A.	N.A.	<0.01

TABLE 3. THE ESTIMATES OF THE POSSIBLE NUMBERS OF MARINE MAMMALS EXPOSED TO SOUND LEVELS GREATER THAN OR EQUAL TO 160 DB DURING RICE'S PROPOSED SEISMIC SURVEY OFF THE COAST OF NEW ENGLAND IN AUGUST 2009. THE PROPOSED SOUND SOURCE IS A SINGLE GI AIRGUN. RECEIVED LEVELS ARE EXPRESSED IN DB RE 1 μPA (RMS) (AVERAGED OVER PULSE DURATION), CONSISTENT WITH NMFS' PRACTICE. NOT ALL MARINE MAMMALS WILL CHANGE THEIR BEHAVIOR WHEN EXPOSED TO THESE SOUND LEVELS, BUT SOME MAY ALTER THEIR BEHAVIOR WHEN LEVELS ARE LOWER (SEE TEXT). SEE TABLES 3–5 IN RICE'S APPLICATION FOR FURTHER DETAIL.—Continued

Species	# of Individuals Exposed (best)[1]	# of Individuals Exposed (max)[1]	Approx. % Regional Population (best)[2]
Short-finned pilot whale (*Globicephala macrorhynchus*)	N.A.	N.A.	<0.01
Unidentified pilot whale *Globcephala* sp.)	10	1,101	<0.01
Harbor porpoise (*Phocoena phocoena*)	0	0	0
Pinnipeds			
Harbor seal[4] (*Phoca vitulina*)	10	N.A.	0.01
Gray seal (*Halichoerus grypus*)	5	N.A.	<0.01
Harp seal[4] (*Pagophilius groenlandicus*)	0	0	0
Hooded seal (*Cystophora cristata*)	0	0	0

N.A. - Data not available or species status was not assessed
[1] Best estimate and maximum estimates of exposure are from Table 5 of Rice's application.
[2] Regional population size estimates are from Table 2 (above) and Table 2 of Rice's application.
[3]Species not sighted in the surveys used for density estimates, but that could occur in low densities in the proposed survey area.
[4]Species for which summer densities in the study area are unavailable, but could occur there in low numbers.
[5]Not identified to species level.

Table 5 of Rice's application shows the best and maximum estimates of the number of exposures and the number of individual marine mammals that potentially could be exposed to greater than or equal to 160 dB re 1 μPa (rms) during the different legs of the seismic survey if no animals moved away from the survey vessel.

The ''best estimate'' of the number of individual marine mammals that could be exposed to seismic sounds with received levels greater than or equal to 160 dB re 1 μPa (rms) (but below Level A harassment thresholds) during the survey is shown in Table 5 of Rice's application and Table 3 (shown above). That includes 0 North Atlantic right (0 percent of the regional population), 2 humpback (0.02 percent of the regional population), 11 fin (0.03 percent of the regional population), and 2 sperm whales (0.02 percent of the regional population), and no beaked whales. Based on the best estimates, most (93 percent) of the marine mammals potentially exposed are dolphins. The common dolphin and bottlenose dolphin are estimated to be the most common species exposed to 160 dB re μPa (rms); the best take estimates for those species are 349 (0.17 percent of the regional population) and 39 (0.05 percent of the regional population), respectively. Estimates for the other dolphin species that could be exposed are lower (see Table 5 of Rice's application). The authorized takes for unidentified pilot whales and Risso's dolphins was increased to 50 (<0.01 percent of the regional population) and 30 (0.15 percent of the regional population), respectively, to account for the average group size these species in which they are often encountered. In addition, it is estimated that 10 harbor seals (0.01 percent) and 5 gray seals (<0.01 percent) may be exposed to sound levels greater than or 160 dB re 1 μPa (rms).

The ''maximum estimate'' column of Table 5 of Rice's application shows an estimated total of 9,479 cetaceans exposed to seismic sounds μ160 dB during the surveys. Those estimates are based on the highest calculated density in any survey stratum; in this case, the stratum with the highest density invariably was one of the areas where very little of the proposed seismic survey will take place, i.e., Georges Central or Shelf Central. In other words, densities observed in the 2002 and 2004 aerial surveys were lowest in the Georges West operation area, where most of the proposed seismic surveys will take place. Therefore, the numbers for which ''take authorization'' is requested, given in the far right column of Table 5 of Rice's application, are the best estimates. For three endangered species, the best estimates were set at the species' mean group size. The North Atlantic right whale, which was not sighted during the aerial surveys, could occur in the survey area, and is usually seen individually (feeding aggregations are not expected to occur in the study area). The humpback and sperm whales, each of whose calculated best estimate was one, have a mean group size of two.

Potential Effects on Marine Mammal Habitat

A detailed discussion of the potential effects of this action on marine mammal habitat, including physiological and behavioral effects on marine fish and invertebrates was included in the proposed IHA (74 FR 28890, June 18, 2009). Based on the discussion in the

proposed IHA notice and the nature of the activities (limited duration), the authorized operations are not expected to have any habitat-related effects that could cause significant or long-term consequences for individual marine mammals or their populations or stocks. Similarly, any effects to food resources are expected to be negligible.

The Rice seismic survey will not result in any permanent impact on habitats used by marine mammals, or to the food sources they use. The main impact issue associated with the proposed activity will be temporarily elevated noise levels and the associated direct effects on marine mammals, as described above. The following sections briefly review effects of airguns on fish and invertebrates, and more details are included in Rice's application and associated EA.

Subsistence Activities

There is no subsistence hunting for marine mammals in the waters off of the coast of New England that implicates MMPA Section 101(a)(5)(D).

Mitigation and Monitoring

Mitigation and monitoring measures for the seismic survey have been developed and refined during previous NSF-funded seismic studies and associated Environmental Assessments (EAs), IHA applications, and IHAs. The mitigation and monitoring measures described herein represent a combination of procedures required by past IHAs for other similar projects and on recommended best practices in Richardson *et al.* (1995), Pierson *et al.* (1998), and Weir and Dolman (2007). The measures are described in detail below.

Mitigation measures proposed for the survey include:

(1) Speed or course alteration, provided that doing so will not compromise operational safety requirements;

(2) GI airgun shut-down procedures;

(3) GI airgun power-downs procedures (including turns);

(4) GI airgun ramp-up procedures;

(5) Procedures for species of particular concern, e.g., emergency shut-down procedures if a North Atlantic right whale is sighted at any distance, and concentrations of humpback, fin, sperm, blue, and/or sei whales will be avoided.

The thresholds for estimating take are also used in connection with proposed mitigation. The radii in Table 2 (above) will be used as shut-down criteria for the other sound sources (single GI airgun, watergun, and sparker), all of which have lower source levels than the two GI airguns.

Vessel-based Visual Monitoring

Marine Mammal Visual Observers (MMVOs) will be based aboard the seismic source vessel and will watch for marine mammals near the vessel during daytime GI airgun operations and during start-ups of airguns at night. MMVOs will also watch for marine mammals near the seismic vessel for at least 30 minutes prior to the start of airgun operations and after an extended shut-down of the airguns. When feasible MMVOs will also make observations during daytime periods when the seismic system is not operating for comparison of sighting rates and animal behavior with vs. without GI airgun operations. Based on MMVO observations, the GI airgun will be shut-down (see below) when marine mammals are detected within or about to enter a designated EZ. The EZ is an area in which a possibility exists of adverse effects on animal hearing or other physical effects (see Table 1 above for the isopleths as they correspond to the relevant EZs). The MMVOs will continue to maintain watch to determine when the animal(s) are outside the safety radius, and airgun operations will not resume until the animal has left that zone. The predicted distances for the safety radius are listed according to the sound source, water depth, and received isopleths in Table 1.

MMVOs will be appointed by the academic institution conducting the research cruise, with NMFS Office of Protected Resources concurrence. During seismic operations off the coast of New England, a total of three MMVOs are planned to be aboard the *Endeavor*. Two MMVOs (except during meal times, when at least one MMVO will be on watch) will monitor the EZ during daytime GI airgun operations and any night-time startups of the airguns. MMVOs will normally work in daytime shifts of four hour duration or less. The vessel crew will also be instructed to assist in detecting marine mammals and implementing mitigation measures (if practical). Before the start of the seismic survey the crew will be given additional instruction regarding how to do so.

The *Endeavor* is a suitable platform from which MMVOs will conduct marine mammal observations. Two locations are likely as observation stations onboard the *Endeavor*; observations may take place from the flying bridge approximately 11 m (36 ft) above sea level or the bridge (8.2 m or 27 ft).

During the daytime, the MMVO(s) will scan the area around the vessel systematically with standard equipment such as reticle binoculars (e.g., 7x50), optical range finders, and with the naked eye. During darkness, night vision devices (NVDs) will be available, when required. Vessel lights and/or NVDs are useful in sightings some marine mammals at the surface within a short distance from the ship (within the EZ for the two GI airguns). The MMVOs will be in wireless communication with ship's officers on the bridge and scientists in the vessel's operations laboratory, so they can advise promptly of the need for avoidance maneuvers or GI airgun shut-down.

Speed or Course Alteration - If a marine mammal is detected outside the EZ, but is likely to enter based on its position and the relative movement of the vessel and animal, then if safety and scientific objectives allow, the vessel speed and/or course may be adjusted to minimize the likelihood of the animal entering the EZ. Typically, during seismic operations, major course and speed adjustments are often impractical when towing long seismic streamers and large source arrays, but are possible in this case because only two GI airguns and a relatively short streamer will be used.

Shut-down Procedures - The operating airgun(s) will be shut-down if a marine mammal is detected within or approaching the EZ for the GI airgun source. Following a shut-down, GI airgun activity will not resume until the marine mammal is outside the EZ for the two GI airguns. The animal will be considered to have cleared the EZ if it:

- Is visually observed to have left the EZ;
- Has not been seen within the EZ for 10 min in the case of species with shorter dive durations - small odontocetes and pinnipeds; and
- Has not been seen within the EZ for 15 min in the case of species with longer dive durations - mysticetes and large odontocetes, including sperm, pygmy sperm, dwarf sperm, killer, and beaked whales;

The 10 and 15 min periods specified above are shorter than would be used in a large-source project given the small 180 and 190 dB (rms) radii for the two GI airguns.

Power-down Procedures - A power-down involves decreasing the number of GI airguns in use from two to one. During turns between successive survey lines, a single GI airgun will be operated. The continued operation of one airgun is intended to alert marine

mammals to the presence of the survey vessel in the area.

Ramp-up Procedures - A ramp-up procedure will be followed when the GI airguns begin operating after a specified period without GI airgun operations. It is proposed that, for the present cruise, this period would be approximately five minutes. This period is based on the 180 dB radii for the GI airguns (see Table 1 above) in relation to the planned speed of the *Endeavor* while shooting.

Ramp-up will begin with a single GI airgun (45 in^3). The second GI airgun (45 in^3) will be added after five min. During ramp-up, the MMVOs will monitor the EZ, and if marine mammals are sighted, a shut-down will be implemented as though both GI airguns were operational.

If the complete EZ has not been visible for at least 30 min prior to the start of operations in either daylight or nighttime, ramp-up will not commence. If one GI airgun has been operating, ramp-up to full power will be permissible at night or in poor visibility, on the assumption that marine mammals will be alerted to the approaching seismic vessel by the sounds from the single GI airgun and have an opportunity to move away if they choose. A ramp-up from a shut-down may occur at night, but only in intermediate-water depths, where the safety radius is small enough to be visible. Ramp-up of the GI airguns will not be initiated if a marine mammal is sighted within or near the applicable EZs during the day or close to the vessel at night.

Procedures for Species of Particular Concern - Several species of concern could occur in the study area. Special mitigation procedures will be used for these species as follows:

(1) The GI airguns, watergun, and sparker will be shut-down if a North Atlantic right whale is sighted at any distance from the vessel;

(2) Concentrations or groups of humpback, fin, sperm, blue, and/or sei whales will be avoided.

A typical ''concentration or group'' of whales for this survey consists of three or more individuals visually sighted. If a concentration or group of the whale species listed above is sighted and does not appear to be traveling (i.e. feeding, socializing), then Rice will avoid them by implementing a power-down or shut-down, delay seismic operations, or move to another area for seismic data acquisition. If the concentration or group of whales appears to be traveling, then Rice will power-down or shut-down seismic operations and wait for approximately 30 min for the individuals to move out of the study area before re-initiating seismic operations. Rice and NSF will coordinate their planned marine mammal monitoring program associated with the seismic survey off the coast of New England with applicable U.S. agencies (e.g., NMFS), and will comply with their requirements.

Reporting

MMVO Data and Documentation

MMVOs will record data to estimate the numbers of marine mammals exposed to various received sound levels and to document apparent disturbance reactions or lack thereof. Data will be used to estimate numbers of animals potentially 'taken' by harassment. They will also provide information needed to order a shut-down of the seismic source when a marine mammal is within or near the EZ.

When a sighting is made, the following information about the sighting will be recorded:

(1) Species, group size, and age/size/sex categories (if determinable); behavior when first sighted and after initial sighting; heading (if consistent), bearing, and distance from seismic vessel; sighting cue; apparent reaction to the seismic source or vessel (e.g., none, avoidance, approach, paralleling, etc.); and behavioral pace.

(2) Time, location, heading, speed, activity of the vessel, sea state, visibility, and sun glare.

The data listed (time, location, etc.) will also be recorded at the start and end of each observation watch, and during a watch whenever there is a change in one or more of the variables.

All observations, as well as information regarding seismic source shut-down, will be recorded in a standardized format. Data accuracy will be verified by the MMVOs at sea, and preliminary reports will be prepared during the survey and summaries forwarded to the Rice's shore facility and to NSF weekly or more frequently. MMVO observations will provide the following information:

(1) The basis for decisions about shutting-down airgun arrays.

(2) Information needed to estimate the number of marine mammals potentially 'taken by harassment.'

(3) Data on the occurrence, distribution, and activities of marine mammals in the area where the seismic study is conducted.

(4) Data on the behavior and movement patterns of marine mammals seen at times with and without seismic activity.

A report will be submitted to NMFS within 90 days after the end of the cruise. The report will describe the operations that were conducted and sightings of marine mammals near the operations. The report will be submitted to NMFS, providing full documentation of methods, results, and interpretation pertaining to all monitoring. The 90–day report will summarize the dates and locations of seismic operations, and all marine mammal sightings (dates, times, locations, activities, associated seismic survey activities). The report will also include estimates of the amount and nature of potential ''take'' of marine mammals by harassment or in other ways.

All injured or dead marine mammals (regardless of cause) will be reported to NMFS as soon as practicable. The report should include species or description of animal, condition of animal, location, time first found, observed behaviors (if alive) and photo or video, if available.

Endangered Species Act (ESA)

Under Section 7 of the ESA, NSF has consulted with the NMFS, Office of Protected Resources, Endangered Species Division on this seismic survey. NMFS has also consulted internally pursuant to Section 7 of the ESA on the issuance of an IHA under section 101(a)(5)(D) of the MMPA for this activity. On August 11, 2009, NMFS concluded consultation with NMFS and NSF, and issued a Biological Opinion (BiOp), which concluded that the proposed action and issuance of an IHA are not likely to jeopardize the continued existence of the North Atlantic right, humpback, sei, fin, blue, and sperm whales, and leatherback, green, loggerhead, hawksbill, and Kemp's ridley sea turtles. The BiOp also concluded that designated critical habitat for these species would not be affected by the survey. Relevant Terms and Conditions of the Incidental Take Statement in the BiOp have been incorporated into the IHA.

National Environmental Policy Act (NEPA)

NSF has prepared an EA titled ''Marine Seismic Survey in the Northwest Atlantic Ocean, August 2009.'' NSF's EA incorporates an ''Environmental Assessment (EA) of a Marine Geophysical Survey by the R/V *Endeavor* in the Northwest Atlantic Ocean, August 2009,'' prepared on behalf of NSF and Rice by LGL Limited, Environmental Research Associates. NMFS has adopted NSF's EA and prepared a Finding of No Significant Impact for the issuance of the IHA.

Determinations

NMFS has determined that the impact of conducting the low-energy marine seismic survey in the Northwest Atlantic Ocean may result, at worst, in a temporary modification in behavior (Level B harassment) of small numbers of marine mammals. Further, this activity is expected to result in a negligible impact on the affected species or stocks. The provision requiring that the activity not have an unmitigable impact on the availability of the affected species or stock for subsistence uses is not implicated for this action.

For reasons stated previously in this document, this determination is supported by:

(1) The likelihood that, given sufficient notice through relatively slow ship speed, marine mammals are expected to move away from a noise source that is annoying prior to its becoming potentially injurious;

(2) The fact that cetaceans would have to be closer than 40 m (131 ft) in deep water, 60 m (197 ft) in intermediate depths, and 296 m (971 ft) in shallow water when the two GI airguns are in use from the vessel to be exposed to levels of sound (180 dB) believed to have even a minimal chance of causing PTS;

(3) The fact that pinnipeds would have to closer than 10 m (33 ft) in deep water, 15 m (49 ft) in intermediate depths, and 147 m (482 ft) in shallow water when the two GI airguns are in use from the vessel to be exposed to levels of sound (190 dB) believed to have even a minimal chance of causing PTS;

(4) The fact that cetaceans would have to be closer than 23 m (76 ft) in deep water, 35 m (115 ft) in intermediate depths, and 150 m (492 ft) in shallow water when the single GI airgun is in use from the vessel to be exposed to levels (180 dB) believed to have even a minimal chance of causing PTS;

(5) The fact that pinnipeds would have closer than 8 m (26 ft) in deep water, 12 m (39 ft) in intermediate depths, and 95 m (312 ft) in shallow water when the single GI airgun is in use from the vessel to be exposed to levels (190 dB) believed to have even a minimal chance of causing PTS.

(6) The fact that marine mammals would have to be closer than 350 m (1,148 ft) in deep water, 525 m (1,722 ft) at intermediate depths, and 1,029 m (3,376 ft) in shallow water when the two GI airguns are in use from the vessel to be exposed to levels of sound (160 dB) believed to have even a minimal chance at causing TTS;

(7) The fact that marine mammals would have to be closer than 220 m (721 ft) in deep water, 330 m (1,083ft) at intermediate depths, and 570 m (1,870 ft) in shallow water when the single GI airgun is in use from the vessel to be exposed to levels of sound (160 dB) believed to have even a minimal chance at causing TTS; and

(8) The likelihood that marine mammal detection ability by trained observers is high at those short distances from the vessel and will trigger shut-downs to prevent injury, and due to the implementation of the other mitigation measures such as ramp-ups. As a result, no take by injury or death is anticipated, and the potential for temporary or permanent hearing impairment is very low and will be avoided through the incorporation of the proposed mitigation measures.

While the number of marine mammals potentially incidentally harassed will depend on the distribution and abundance of marine mammals in the vicinity of the survey activity, the number of potential harassment takings is estimated to be small, less than a few percent of any of the estimated population sizes, and has been mitigated to the lowest level practicable through incorporation of the measures mentioned previously in this document.

Authorization

As a result of these determinations, NMFS issued an IHA to Rice for conducting a low-energy marine seismic survey in the Northwest Atlantic Ocean in August, 2009, including the previously mentioned mitigation, monitoring, and reporting requirements.

Dated: August 11, 2009.

James H. Lecky,

Director, Office of Protected Resources, National Marine Fisheries Service.

[FR Doc. E9–19718; Filed 8–14–09; 8:45 am]

BILLING CODE 3510–22–S

DEPARTMENT OF COMMERCE

Bureau of Industry and Security

Materials Technical Advisory Committee; Notice of Partially Closed Meeting

The Materials Technical Advisory Committee will meet on September 10, 2009, 10 a.m., Herbert C. Hoover Building, Room 3884, 14th Street between Constitution & Pennsylvania Avenues, NW., Washington, DC. The Committee advises the Office of the Assistant Secretary for Export Administration with respect to technical questions that affect the level of export controls applicable to materials and related technology.

Agenda

Open Session

1. Opening Remarks and Introduction.
2. Presentation on recently mandated changes to the interagency Commodity Jurisdiction review process.
3. Report on recent changes to the Commerce Control List based on Australia Group Regime list changes.
4. Report of Composite Working group and ECCN review subgroup.
5. New business.
6. Public comments from teleconference and physical attendees.
7. Closed session to follow.

Closed Session

8. Discussion of matters determined to be exempt from the provisions relating to public meetings found in 5 U.S.C. app. 2 section 10(a)(1) and 10(a)(3).

The open session will be accessible via teleconference to 20 participants on a first come, first serve basis. To join the conference, submit inquiries to Ms. Yvette Springer at *Yspringer@bis.doc.gov* no later than September 3, 2009.

A limited number of seats will be available during the public session of the meeting. Reservations are not accepted. To the extent time permits, members of the public may present oral statements to the Committee. Written statements may be submitted at any time before or after the meeting. However, to facilitate distribution of public presentation materials to Committee members, the materials should be forwarded prior to the meeting to Ms. Springer via e-mail.

The Assistant Secretary for Administration, with the concurrence of the delegate of the General Counsel, formally determined on October 1, 2008, pursuant to Section 10(d) of the Federal Advisory Committee Act, as amended, that the portion of the meeting dealing with matters the premature disclosure of which would likely frustrate the implementation of a proposed agency action as described in 5 U.S.C. 552b(c)(9)(B) shall be exempt from the provisions relating to public meetings found in 5 U.S.C. app. 2 § § 10(a)(1) and 10(a)(3). The remaining portions of the meeting will be open to the public.

For more information, call Yvette Springer at (202) 482–2813.

Dated: August 12, 2009.

Yvette Springer,

Committee Liaison Officer.

[FR Doc. E9–19665 Filed 8–14–09; 8:45 am]

BILLING CODE 3510–JT–P

DEPARTMENT OF COMMERCE

National Oceanic and Atmospheric Administration

RIN: 0648–XR00

New England Fishery Management Council; Public Meeting

AGENCY: National Marine Fisheries Service (NMFS), National Oceanic and Atmospheric Administration (NOAA), Commerce.

ACTION: Notice of a public meeting.

SUMMARY: The New England Fishery Management Council (Council) is scheduling a public meeting of its Scallop Survey Advisory Panel, in September, 2009, to consider actions affecting New England fisheries in the exclusive economic zone (EEZ). Recommendations from this group will be brought to the full Council for formal consideration and action, if appropriate.

DATES: This meeting will be held on Thursday, September 3, 2009 at 9 a.m.

ADDRESSES: This meeting will be held at the Hotel Providence, 139 Mathewson Street, Providence, RI 02903; telephone: (401) 861–8000; fax: (401) 861–8002.

Council address: New England Fishery Management Council, 50 Water Street, Mill 2, Newburyport, MA 01950.

FOR FURTHER INFORMATION CONTACT: Paul J. Howard, Executive Director, New England Fishery Management Council; telephone: (978) 465–0492.

SUPPLEMENTARY INFORMATION: The Advisory Panel will review and discuss the results from the 2009 regular and experimental scallop surveys. Recommendations for calibration peer review, 2010 survey research, and integrated survey methodology may be developed. The panel may recommend changes to scallop survey research priorities. Other related scallop survey priorities. Other related scallop survey and research set aside issues may be discussed.

Although non-emergency issues not contained in this agenda may come before this group for discussion, in accordance with the Magnuson-Stevens Fishery Conservation and Management Act (Magnuson-Stevens Act), those issues may not be the subject of formal action during this meeting. Actions will be restricted to those issues specifically identified in this notice and any issues arising after publication of this notice that require emergency action under Section 305(c) of the Magnuson-Stevens Act, provided the public has been notified of the Council's intent to take final action to address the emergency.

Special Accommodations

This meeting is physically accessible to people with disabilities. Requests for sign language interpretation or other auxiliary aids should be directed to Paul J. Howard, Executive Director, at (978) 465–0492, at least 5 days prior to the meeting date.

Authority: 16 U.S.C. 1801 *et seq.*

Dated: August 12, 2009.

William D. Chappell,

Acting Director, Office of Sustainable Fisheries, National Marine Fisheries Service.

[FR Doc. E9–19661 Filed 8–14–09; 8:45 am]

BILLING CODE 3510–22–S

DEPARTMENT OF COMMERCE

Economic Development Administration

Notice of Petitions by Firms for Determination of Eligibility To Apply for Trade Adjustment Assistance

AGENCY: Economic Development Administration, Department of Commerce.

ACTION: Notice and opportunity for public comment.

Pursuant to Section 251 of the Trade Act of 1974 (19 U.S.C. 2341 *et seq.*), the Economic Development Administration (EDA) has received petitions for certification of eligibility to apply for Trade Adjustment Assistance from the firms listed below. EDA has initiated separate investigations to determine whether increased imports into the United States of articles like or directly competitive with those produced by each firm contributed importantly to the total or partial separation of the firm's workers, or threat thereof, and to a decrease in sales or production of each petitioning firm.

LIST OF PETITIONS RECEIVED BY EDA FOR CERTIFICATION OF ELIGIBILITY TO APPLY FOR TRADE ADJUSTMENT

[July 7, 2009 through August 6, 2009]

Firm	Address	Date accepted for filing	Products
Mastercraft Specialties, Inc.	800 Maple Street, Red Lion, PA 17356.	7/24/2009	Furniture for college and military dormitories; healthcare/nursing home furniture for patient rooms; store fixtures and point of purchase displays.
SideLifts, Inc.	1208 B Badger Street, Yorkville, IL 60560.	7/9/2009	Electric four-directional lift truck.
Federal Tool & Engineering, LLC.	N52 W5338 Portland Road, Cedarburg, WI 53095.	7/23/2009	Welded, machined, stamped, fabricated and assembled metal components.
J.B. Hill Boot Company	335 H. Clark Dr., El Paso, TX 79905.	7/23/2009	Leather footwear, cowboy boots.
Dymotek Corporation	7 Main Street, Ellington, CT 06029.	7/23/2009	Dynamic molding technologies, core capabilities, secondary services and support systems.
Tru-Flex Metal Hose Corporation.	2391 S. State Road 263, West Lebanon, IN 47991.	7/30/2009	Flexible metal hoses, piping, connectors and associated products.
Precision Inc. D.B.A. Precision Pulley & Idler.	300 SE., 14th Street, Pella, IA 50219.	7/20/2009	Conveyor pulleys and idlers.
Overton & Sons Tool & Die, Company, Inc..	1250 S. Old State Road 67, Mooresville, IN 46158.	7/20/2009	Metal tools.
Conitex Sonoco, Inc.	1302 Industrial Pike, Gastonia, NC 28052–0010.	7/21/2009	Paper cones and tubes for spun yarn, and corrugated pallets.
C.R. Hudgins Plating, Inc.	3600 Candlers Mtn. Rd., Lynchburg, VA 24506.	7/29/2009	Electroplating, coating and anodizing metals services.

LIST OF PETITIONS RECEIVED BY EDA FOR CERTIFICATION OF ELIGIBILITY TO APPLY FOR TRADE ADJUSTMENT—Continued

[July 7, 2009 through August 6, 2009]

Firm	Address	Date accepted for filing	Products
Flow Sciences, Inc.	2025 Mercantile Drive, Leland, NC 28451.	7/23/2009	Safety enclosures; materials include acrylic, polypropylene, lab-grade phenolic, & stainless steel.
Barons Billiards, Inc.	1127 Union Avenue, Laconia, NH 03246.	7/21/2009	Custom pool tables. They also service and sell all types of billiard accessories, air hockey, shuffleboard and ping pong tables and offer game room design services.
Ultra Heat Inc.	1314 Perkins Ave., Elkhart, IN 45616.	7/9/2009	Heating elements and devices.
ScyTek Laboratories, Inc.	205 South 600 W, Logan, UT 84321.	7/9/2009	Biological laboratory reagent products.
C&C Machine, Inc.	78 Progress Ave., Tyngsboro, MA 01879.	7/23/2009	Custom precision machined prototype and production components.
Caster Concepts, Inc.	16000 E. Michigan Ave., Albion, MI 49224.	7/23/2009	Casters for industrial machines and large equipment; other machined parts.
Arrowhead Containers, Inc	4330 Clary Blvd., Kansas City, MO 64130.	7/23/2009	Corrugated boxes and displays.
Great Eagle Enterprises Corp	6009 Manchester Road, St Louis, MO 63110–1908.	7/23/2009	Die & metal stamping products: brushings, sleeves, covers, handles, enclosure boxes, wrenches, etc.
Gemaco, Inc	2925 N. 7 Highway, Blue Springs, MO 64014.	7/23/2009	Playing cards and table game layouts.
Lampin Corporation	38 River Road, Uxbridge, MA 01569.	7/23/2009	Full CNC capabilities in turned parts from .020″ to 6″diameter and lengths up to 36″.
JEN Manufacturing, Inc.	3 Latti Farm Road, Millbury, MA 01527.	8/6/2009	Polyurethane foam disposable paint brushes and roller refills.
Mar-Bal, Incorporated	10095 Queens Way, Chagrin Falls, OH 44023.	7/28/2009	Thermoset custom molded parts and molding compounds
New England Forest Products	315 Sawmill Road, P.O. Box, Greenfield, NH 03047.	7/30/2009	Hard and softwood.
Burton Industries Inc.	6202 S. State Rd., Goodrich, MI 48438.	7/7/2009	Robotic process equipment, automation, fixtures and special machinery.
Acme Engineering and Manufacturing.	P.O. Box 978, Muskogee, OK 74402.	7/7/2009	Industrial grade propeller exhaust fans, blowers and centrifuges.
KDK Trimmings & Novelty, Inc.	47–10 32nd Place, Long Island, NY 11101.	7/21/2009	Trimming for apparel. Stitched trimming for women's clothing.
IP Automation, Inc.	2818 National Place, Colorado, CO 80906.	7/9/2009	Machined metal products.
Surtech Industries, Inc.	915 Borom Road, York, PA 17404.	7/10/2009	Finishing services to include: powder coating, metal blasting, polishing and buffing, nickel braze coatings, specialty liquid and Teflon coatings and other services.
RTR Technologies, Inc.	48 Main Street, Stockbridge, MA 01262.	7/9/2009	Track heaters, contact rail heaters and OSC heaters and related controls, auxiliary and freeze protection heaters and related controls for rolling stock, passenger comfort heaters for rolling stock and their related controls, HVAC, door operation and train.
Crownlite Mfg. Corp.	1546 Ocean Ave., Bohemia, NY 11716.	7/9/2009	Metal lighting fixtures.
Bryco Machine, Inc.	7800 Graphics Drive, Tinley Park, IL 60477.	7/7/2009	Complex state-of-the-art machined metal parts in both short and long production runs in addition to prototyping.
Finishes LTD	3057 Delta Drive, Colorado, CO 80910.	7/14/2009	Anodizing and plating coatings for metal forming operations.
Cloverdale	3015 34th Street, NW., Mandan, ND 58554.	8/6/2009	Sausages and other prepared meat products.
Claudes Sauces, Inc.	935 Loma Verde, El Paso, TX 79936.	7/10/2009	Meat sauces and marinades.

Any party having a substantial interest in these proceedings may request a public hearing on the matter. A written request for a hearing must be submitted to the Office of Performance Evaluation, Room 7009, Economic Development Administration, U.S. Department of Commerce, Washington, DC 20230, no later than ten (10) calendar days following publication of this notice. Please follow the procedures set forth in Section 315.9 of EDA's final rule (71 FR 56704) for procedures for requesting a public hearing. The Catalog of Federal Domestic Assistance official program number and title of the program under which these petitions are submitted is 11.313, Trade Adjustment Assistance.

Dated: August 11, 2009.

William P. Kittredge,

Program Officer for TAA.

[FR Doc. E9–19712 Filed 8–14–09; 8:45 am]

BILLING CODE 3510–24–P

CONSUMER PRODUCT SAFETY COMMISSION

[CPSC Docket Number: CPSC–2009–0063]

Notice of Availability of a Statement of Policy: Testing of Component Parts With Respect to Section 108 of the Consumer Product Safety Improvement Act

AGENCY: Consumer Product Safety Commission.

ACTION: Notice of availability.

SUMMARY: The Consumer Product Safety Commission (''Commission'') is announcing the availability of a document titled, ''Statement of Policy: Testing of Component Parts With Respect to Section 108 of the Consumer Product Safety Improvement Act'' (''Statement of Policy''). Section 108 of the Consumer Product Safety Improvement Act of 2008 (''CPSIA'') prohibits the sale of certain products containing specified phthalates. The Statement of Policy establishes the Commission's position with respect to testing products to determine whether they contain phthalates in excess of the statutory limits.

DATES: Submit written or electronic comments on the Statement of Policy by September 16, 2009.

ADDRESSES: The Statement of Policy is available from the Commission's Web site at *http://www.cpsc.gov/about/cpsia/componenttestingpolicy.pdf*. Copies also may be obtained from the Consumer Product Safety Commission, Office of the Secretary, Room 502, 4330 East-West Highway, Bethesda, Maryland 20814; 301–504–7923.

You may submit comments, identified by Docket No. CPSC–2009–0063, by any of the following methods:

Electronic Submissions

Submit electronic comments in the following way:

Federal eRulemaking Portal: http://www.regulations.gov. Follow the instructions for submitting comments. To ensure timely processing of comments, the Commission is no longer accepting comments submitted by electronic mail (e-mail) except through *http://www.regulations.gov*.

Written Submissions

Submit written submissions in the following way:

Mail/Hand delivery/Courier (for paper, disk, or CD–ROM submissions), preferably in five copies, to: Office of the Secretary, Consumer Product Safety Commission, Room 502, 4330 East West Highway, Bethesda, MD 20814; telephone (301) 504–7923.

Instructions: All submissions received must include the agency name and docket number for this notice. All comments received may be posted without change, including any personal identifiers, contact information, or other personal information provided, to *http://www.regulations.gov*. Do not submit confidential business information, trade secret information, or other sensitive or protected information electronically. Such information should be submitted in writing.

Docket: For access to the docket to read background documents or comments received, go to *http://www.regulations.gov*.

FOR FURTHER INFORMATION CONTACT: Michael A. Babich, PhD, Consumer Product Safety Commission, 4330 East West Highway, Bethesda, MD 20814; telephone (301) 504–7253; *mbabich@cpsc.gov*.

SUPPLEMENTARY INFORMATION: On August 14, 2008, the CPSIA (Pub. L. 110–314) was enacted. Section 108 of the CPSIA, titled ''Prohibition on Sale of Certain Products Containing Specified Phthalates,'' permanently prohibits the sale of any ''children's toy or child care article'' containing more than 0.1 percent of three specified phthalates (di-(2-ethylhexyl) phthalate (DEHP), dibutyl phthalate (DBP), and benzyl butyl phthalate (BBP)). Section 108 of the CPSIA also prohibits, on an interim basis, ''toys that can be placed in a child's mouth'' or ''child care articles'' containing more than 0.1 percent of three additional phthalates (diisononyl phthalate (DINP), diisodecyl phthalate (DIDP), and di-n-octyl phthalate (DnOP)). These prohibitions became effective on February 10, 2009.

The terms ''children's toy,'' ''toy that can be placed in a child's mouth,'' and ''child care article'' are defined in section 108 of the CPSIA. For example, section 108 of the CPSIA defines a ''children's toy'' as a ''consumer product designed or intended by the manufacturer for a child 12 years of age or younger for use by the child when the child plays.'' It is noteworthy that the definition uses the term ''consumer product'' because section 3(a)(5) of the Consumer Product Safety Act (CPSA) defines ''consumer product,'' in relevant part, as ''any article, or component part thereof, produced or distributed (i) for sale to a consumer for use in or around a permanent or temporary household or residence, a school, in recreation, or otherwise, or (ii) for the personal use, consumption or enjoyment of a consumer in or around a permanent or temporary household or residence, a school, in recreation, or otherwise * * *''

In the **Federal Register** of February 23, 2009 (74 FR 8058), the Commission published a notice of availability regarding a draft guidance discussing which children's products are subject section 108 of the CPSIA. The notice invited comment on various questions and also on the Commission's test method for phthalates. The test method (Test Method: CPSC–CH–C1001–09.1, ''Standard Operating Procedure for Determination of Phthalates,'' dated March 3, 2009) generated some controversy in that it suggested testing the entire product or testing components and then mathematically combining the results.

The Commission has reexamined the question of product testing and has prepared a document titled ''Statement of Policy: Testing of Component Parts with Respect to section 108 of the Consumer Product Safety Improvement Act.'' The Statement of Policy describes the Commission's position regarding component testing, and the Commission has posted a new test method, Test Method: CPSC–CH–C1001–09.2, ''Standard Operating Procedure for Determination of Phthalates,'' dated July 27, 2009 on the Commission's Web site at *http://www.cpsc.gov/about/cpsia/CPSC–CH–C1001–09.2.pdf*. The Statement of Policy is available on the Commission's Web site at *http://www.cpsc.gov/about/cpsia/componenttestingpolicy.pdf* and from the Commission's Office of the Secretary at the location listed in the **ADDRESSES** section of this notice.

The Commission invites comment on the Statement of Policy. Comments should be submitted by September 16, 2009. Information on how to submit comments can be found in the **ADDRESSES** section of this notice.

Dated: August 10, 2009.

Todd Stevenson,

Secretary, Consumer Product Safety Commission.

[FR Doc. E9–19664 Filed 8–14–09; 8:45 am]

BILLING CODE 6355–01–P

DEPARTMENT OF EDUCATION

Submission for OMB Review; Comment Request

AGENCY: Department of Education.

SUMMARY: The Director, Information Collection Clearance Division, Regulatory Information Management Services, Office of Management invites comments on the submission for OMB

review as required by the Paperwork Reduction Act of 1995.

DATES: Interested persons are invited to submit comments on or before September 16, 2009.

ADDRESSES: Written comments should be addressed to the Office of Information and Regulatory Affairs, *Attention:* Education Desk Officer, Office of Management and Budget, 725 17th Street, NW., Room 10222, New Executive Office Building, Washington, DC 20503, be faxed to (202) 395–5806 or send e-mail to *oira_submission@omb.eop.gov.*

SUPPLEMENTARY INFORMATION: Section 3506 of the Paperwork Reduction Act of 1995 (44 U.S.C. Chapter 35) requires that the Office of Management and Budget (OMB) provide interested Federal agencies and the public an early opportunity to comment on information collection requests. OMB may amend or waive the requirement for public consultation to the extent that public participation in the approval process would defeat the purpose of the information collection, violate State or Federal law, or substantially interfere with any agency's ability to perform its statutory obligations. The Director, Regulatory Information Management Services, Office of Management, publishes that notice containing proposed information collection requests prior to submission of these requests to OMB. Each proposed information collection, grouped by office, contains the following: (1) Type of review requested, e.g., new, revision, extension, existing or reinstatement; (2) Title; (3) Summary of the collection; (4) Description of the need for, and proposed use of, the information; (5) Respondents and frequency of collection; and (6) Reporting and/or Recordkeeping burden. OMB invites public comment.

Dated: August 12, 2009.

Angela C. Arrington,

Director, Information Collection Clearance Division, Regulatory Information Management Services, Office of Management.

Office of Postsecondary Education

Type of Review: Extension.

Title: U.S.-Brazil Higher Education Consortia Program (1894–0001).

Frequency: Annually.

Affected Public: Businesses or other for-profit; not-for-profit institutions.

Reporting and Recordkeeping Hour Burden:

Responses: 30.

Burden Hours: 180.

Abstract: US/ED collects applications under the U.S.-Brazil Program to make grants to institutions of higher education. The U.S.-Brazil program is a discretionary grant program which supports institutional cooperation and student exchanges among the United States and Brazil. Funding supports the participation of U.S. institutions and students in bilateral consortia of institutions of higher education. Funding will be multi-year with funding up to four years.

This information collection is being submitted under the Streamlined Clearance Process for Discretionary Grant Information Collections (1894–0001). Therefore, the 30-day public comment period notice will be the only public comment notice published for this information collection.

Requests for copies of the information collection submission for OMB review may be accessed from *http://edicsweb.ed.gov,* by selecting the ''Browse Pending Collections'' link and by clicking on link number 4109. When you access the information collection, click on ''Download Attachments '' to view. Written requests for information should be addressed to U.S. Department of Education, 400 Maryland Avenue, SW., LBJ, Washington, DC 20202–4537. Requests may also be electronically mailed to the Internet address *ICDocketMgr@ed.gov* or faxed to 202–401–0920. Please specify the complete title of the information collection when making your request.

Comments regarding burden and/or the collection activity requirements should be electronically mailed to *ICDocketMgr@ed.gov.* Individuals who use a telecommunications device for the deaf (TDD) may call the Federal Information Relay Service (FIRS) at 1–800–877–8339.

[FR Doc. E9–19717 Filed 8–14–09; 8:45 am]

BILLING CODE 4000–01–P

DEPARTMENT OF EDUCATION

Notice of Proposed Information Collection Requests

AGENCY: Department of Education.

SUMMARY: The Director, Information Collection Clearance Division, Regulatory Information Management Services, Office of Management, invites comments on the proposed information collection requests as required by the Paperwork Reduction Act of 1995.

DATES: Interested persons are invited to submit comments on or before October 16, 2009.

SUPPLEMENTARY INFORMATION: Section 3506 of the Paperwork Reduction Act of 1995 (44 U.S.C. Chapter 35) requires that the Office of Management and Budget (OMB) provide interested Federal agencies and the public an early opportunity to comment on information collection requests. OMB may amend or waive the requirement for public consultation to the extent that public participation in the approval process would defeat the purpose of the information collection, violate State or Federal law, or substantially interfere with any agency's ability to perform its statutory obligations. The Director, Information Collection Clearance Division, Regulatory Information Management Services, Office of Management, publishes that notice containing proposed information collection requests prior to submission of these requests to OMB. Each proposed information collection, grouped by office, contains the following: (1) Type of review requested, *e.g.,* new, revision, extension, existing or reinstatement; (2) Title; (3) Summary of the collection; (4) Description of the need for, and proposed use of, the information; (5) Respondents and frequency of collection; and (6) Reporting and/or Recordkeeping burden. OMB invites public comment.

The Department of Education is especially interested in public comment addressing the following issues: (1) Is this collection necessary to the proper functions of the Department; (2) will this information be processed and used in a timely manner; (3) is the estimate of burden accurate; (4) how might the Department enhance the quality, utility, and clarity of the information to be collected; and (5) how might the Department minimize the burden of this collection on the respondents, including through the use of information technology.

Dated: August 11, 2009.

Angela C. Arrington,

Director, Information Collection Clearance Division, Regulatory Information Management Services, Office of Management.

Office of Elementary and Secondary Education

Type of Review: Extension.

Title: State Fiscal Stabilization Fund MOE Guidance.

Frequency: One time.

Affected Public: State, Local, or Tribal Gov't, SEAs or LEAs.

Reporting and Recordkeeping Hour Burden:

Responses: 10.

Burden Hours: 10.

Abstract: This guidance supplements the April 2009 Guidance on the State Fiscal Stabilization Fund program and provides additional information on the

statutory maintenance-of-effort (MOE) requirements and the process through which a State applies for an MOE waiver.

Requests for copies of the proposed information collection request may be accessed from *http://edicsweb.ed.gov*, by selecting the ''Browse Pending Collections'' link and by clicking on link number 4111. When you access the information collection, click on ''Download Attachments'' to view. Written requests for information should be addressed to U.S. Department of Education, 400 Maryland Avenue, SW., LBJ, Washington, DC 20202–4537. Requests may also be electronically mailed to *ICDocketMgr@ed.gov* or faxed to 202–401–0920. Please specify the complete title of the information collection when making your request.

Comments regarding burden and/or the collection activity requirements should be electronically mailed to *ICDocketMgr@ed.gov.* Individuals who use a telecommunications device for the deaf (TDD) may call the Federal Information Relay Service (FIRS) at 1–800–877–8339.

[FR Doc. E9–19716 Filed 8–14–09; 8:45 am]

BILLING CODE 4000–01–P

DEPARTMENT OF EDUCATION

Submission for OMB Review; Comment Request

AGENCY: Department of Education.

SUMMARY: The Director, Information Collection Clearance Division, Regulatory Information Management Services, Office of Management invites comments on the submission for OMB review as required by the Paperwork Reduction Act of 1995.

DATES: Interested persons are invited to submit comments on or before September 16, 2009.

ADDRESSES: Written comments should be addressed to the Office of Information and Regulatory Affairs, *Attention:* Education Desk Officer, Office of Management and Budget, 725 17th Street, NW., Room 10222, New Executive Office Building, Washington, DC 20503, be faxed to (202) 395–5806 or send e-mail to *oira_submission@omb.eop.gov.*

SUPPLEMENTARY INFORMATION: Section 3506 of the Paperwork Reduction Act of 1995 (44 U.S.C. Chapter 35) requires that the Office of Management and Budget (OMB) provide interested Federal agencies and the public an early opportunity to comment on information collection requests. OMB may amend or waive the requirement for public consultation to the extent that public participation in the approval process would defeat the purpose of the information collection, violate State or Federal law, or substantially interfere with any agency's ability to perform its statutory obligations. The IC Clearance Official, Regulatory Information Management Services, Office of Management, publishes that notice containing proposed information collection requests prior to submission of these requests to OMB. Each proposed information collection, grouped by office, contains the following: (1) Type of review requested, e.g., new, revision, extension, existing or reinstatement; (2) Title; (3) Summary of the collection; (4) Description of the need for, and proposed use of, the information; (5) Respondents and frequency of collection; and (6) Reporting and/or Recordkeeping burden. OMB invites public comment.

Dated: August 11, 2009.

Angela C. Arrington,

Director, Information Collection Clearance Division, Regulatory Information Management Services, Office of Management.

Office of Special Education and Rehabilitative Services

Type of Review: New.

Title: Needs Assessment and Workplan Guide for the Technical Assistance and Continuing Education Program.

Frequency: Three times per year.

Affected Public: Individuals or households.

Reporting and Recordkeeping Hour Burden:

Responses: 10.

Burden Hours: 1,067.

Abstract: Technical Assistance and Continuing Education Centers are required to conduct needs assessment of state vocational rehabilitation agencies and their partners in their regions, and create workplans to address the needs they identify. This guide establishes the requirements for, and information to be reported about, those activities.

Requests for copies of the information collection submission for OMB review may be accessed from *http://edicsweb.ed.gov,* by selecting the ''Browse Pending Collections'' link and by clicking on link number 4110. When you access the information collection, click on ''Download Attachments '' to view. Written requests for information should be addressed to U.S. Department of Education, 400 Maryland Avenue, SW., LBJ, Washington, DC 20202–4537. Requests may also be electronically mailed to the Internet address *ICDocketMgr@ed.gov* or faxed to 202–401–0920. Please specify the complete title of the information collection when making your request.

Comments regarding burden and/or the collection activity requirements should be electronically mailed to *ICDocketMgr@ed.gov*. Individuals who use a telecommunications device for the deaf (TDD) may call the Federal Information Relay Service (FIRS) at 1–800–877–8339.

[FR Doc. E9–19715 Filed 8–14–09; 8:45 am]

BILLING CODE 4000–01–P

DEPARTMENT OF EDUCATION

[Docket ID ED–2009–OESE–0011]

RIN 1810–AB05

American Recovery and Reinvestment Act of 2009 (ARRA); Title I, Part A of the Elementary and Secondary Education Act of 1965, as Amended (ESEA); Part B, Section 611 of the Individuals With Disabilities Education Act (IDEA)

AGENCY: Office of Elementary and Secondary Education; Office of Special Education and Rehabilitative Services, U.S. Department of Education.

ACTION: Notice of proposed adjustments to statutory caps on State administration.

SUMMARY: The U.S. Secretary of Education (Secretary) proposes to adjust the statutory caps on State administration under Title I, part A of the Elementary and Secondary Education Act of 1965, as amended (Title I, part A), and part B, section 611 of the Individuals with Disabilities Education Act (IDEA) with respect to funds available for those programs under the American Recovery and Reinvestment Act of 2009 (ARRA), Public Law 111–5. The proposed adjustments would allow State educational agencies (SEAs) to reserve State administrative funds from their fiscal year (FY) 2009 ARRA allocations under Title I, part A and section 611 of IDEA to help defray the costs of data collections that are specifically related to ARRA funding for these programs (including, for Title I, part A, data collection related to waivers). This notice only affects administrative costs for data collection under Title I, part A and IDEA section 611; for costs associated with other ARRA data collections, SEAs may use a portion of the State's Government Services grant under the State Fiscal Stabilization Funds or funds allowable for that purpose under individual programs.

DATES: We must receive your comments on or before September 16, 2009.

ADDRESSES: Submit your comments through the Federal eRulemaking Portal or via postal mail, commercial delivery, or hand delivery. We will not accept comments by fax or by e-mail. Please submit your comments only one time in order to ensure that we do not receive duplicate copies. In addition, please include the Docket ID and the term ''State Administration'' at the top of your comments.

- *Federal eRulemaking Portal:* Go to *http://www.regulations.gov* to submit your comments electronically. Information on using *Regulations.gov*, including instructions for accessing agency documents, submitting comments, and viewing the docket, is available on the site under ''How To Use This Site.''
- *Postal Mail, Commercial Delivery, or Hand Delivery.* If you mail or deliver your comments about these proposed adjustments, address them to Dr. Zollie Stevenson, Jr., U.S. Department of Education, 400 Maryland Avenue, SW., Room 3W230, Washington, DC 20202–7241.
- *Privacy Note:* The Department's policy for comments received from members of the public (including those comments submitted by mail, commercial delivery, or hand delivery) is to make these submissions available for public viewing in their entirety on the Federal eRulemaking Portal at *http://www.regulations.gov*. Therefore, commenters should be careful to include in their comments only information that they wish to make publicly available on the Internet.

If you use a telecommunications device for the deaf (TDD), call the Federal Relay Service (FRS), toll free, at 1–800–877–8339.

FOR FURTHER INFORMATION CONTACT: Dr. Zollie Stevenson, Jr., Telephone: (202) 260–0826 or by e-mail: *Zollie.Stevenson@ed.gov*.

SUPPLEMENTARY INFORMATION: *Invitation To Comment:* We invite you to submit comments regarding this notice. To ensure that your comments have maximum effect in developing the final notice, we urge you to identify clearly the specific proposed provision that each comment addresses.

We invite you also to assist us in complying with the specific requirements of Executive Order 12866 and its overall requirement of reducing regulatory burden that might result from these proposed adjustments. Please let us know of any further ways we could reduce potential costs or increase potential benefits while preserving the effective and efficient administration of these programs.

During and after the comment period, you may inspect all public comments about this notice by accessing *Regulations.gov*. You may also inspect the comments in person, in Room 3W100, 400 Maryland Avenue, SW., Washington, DC, between the hours of 8:30 a.m. and 4:00 p.m., Washington, DC time, Monday through Friday of each week except Federal holidays.

Assistance To Individuals With Disabilities in Reviewing the Rulemaking Record: On request, we will provide an appropriate accommodation or auxiliary aid to an individual with a disability who needs assistance to review the comments or other documents in the public rulemaking record for this notice. If you want to schedule an appointment for this type of accommodation or auxiliary aid, please contact the person listed under **FOR FURTHER INFORMATION CONTACT.**

Purpose of Programs: The ARRA provides billions of dollars in new funding for education in order to ''jump-start'' school reform efforts and to serve special populations while also saving and creating jobs and stimulating the economy. In particular, the ARRA provides $10 billion in new funding under Title I, part A and $11.3 billion in new funding under IDEA part B, section 611. Title I, part A provides assistance through SEAs to local educational agencies (LEAs) and schools with high concentrations of students from families that live in poverty to strengthen teaching and learning for students at risk of failing to meet State academic achievement standards and to close the achievement gap. Section 611 of IDEA provides funds through SEAs to LEAs to help them ensure that children with disabilities, from ages three through 21, have access to a free appropriate public education to meet each child's unique needs and prepare each child for further education, employment, and independent living.

Program Authority: Division A, Title XV, section 1552 of the American Recovery and Reinvestment Act of 2009, Public Law 111–5; 20 U.S.C. 6301 *et seq.* (Title I, part A); 20 U.S.C. 1400 *et seq.* (IDEA section 611).

Background

Section 1552 of the ARRA authorizes the Secretary, after following the notice and comment rulemaking requirements under the Administrative Procedure Act (5 U.S.C. 500), to ''reasonably adjust applicable limits on administrative expenditures for Federal awards to help [States] defray the costs of data collection requirements initiated pursuant to [the ARRA].'' Both Title I, part A and section 611 of IDEA, programs that received significant funding increases through the ARRA, have caps on the amount of funds for State administration that an SEA may reserve from its allocations for these programs.

Specifically, section 1004(b) of the ESEA restricts the amount of funds an SEA may reserve for State administration from its Title I, part A allocation to no more than one percent of the amount the SEA would receive under Title I, part A, if $14 billion were appropriated for parts A, C, and D of Title I (with any SEA whose amount under section 1004(b) would be less than $400,000 permitted to reserve up to $400,000). The total amount appropriated in FY 2009 exceeds $14 billion, triggering this cap. Similarly, section 611(e)(1) of IDEA restricts the amount of funds an SEA may reserve for administration of the program to not more than the maximum amount the SEA was eligible to reserve for FY 2004 or $800,000 (adjusted annually for inflation), whichever is greater. (The Secretary is not proposing an adjustment to the cap on State administration under section 619 of IDEA because, under section 619(e) of IDEA, the Department has concluded that the ARRA appropriation for section 619 results in a sufficient increase in the amount an SEA may reserve for State administration under that program.)

The ARRA imposes a number of specific data collection and reporting requirements on an SEA that substantially increase its data burden in administering Title I, part A and IDEA section 611. Specifically, the ARRA data collection requirements affecting Title I, part A include, but are not limited to, the following:

- Each LEA that receives Title I, part A ARRA funds must provide to its SEA, by December 1, 2009, a school-by-school listing of per-pupil education expenditures from State and local sources during school year 2008–09. The SEA, in turn, must submit this information to the Department by March 31, 2010. This is a new data collection, as most SEAs do not currently collect this school-level information from their LEAs.
- Under section 1512 of the ARRA, an SEA must report, on a quarterly basis, specific information regarding its obligation and use of Title I, part A ARRA funds.
- Under 2 CFR 176.210, an SEA and its LEAs must track Title I, part A ARRA funds separately from their regular FY 2009 allocations, which will necessitate

increased data management and collection.

- An SEA will likely assume increased administrative responsibilities in a number of other areas related to ARRA data collection activities, including the following:
  - ○ Providing guidance to LEAs regarding ARRA data quality, and monitoring the quality of the ARRA data that LEAs must provide.
  - ○ Data collection related to monitoring and auditing LEAs' use of Title I, part A ARRA funds.
  - ○ Submitting requests for waivers of Title I, part A requirements related to ARRA funds.
  - ○ Collecting data to address the criteria involving Title I, part A for ''Race to the Top'' submissions and other activities.
  - ○ Supporting data collection activities affecting Title I, part A ARRA funds and ARRA School Improvement Grants under section 1003(g) of the ESEA.
  - ○ Addressing additional data collection requirements that could affect Title I, part A ARRA funds.

Similarly, the ARRA data collection requirements affecting the programs funded through section 611 of IDEA include, but are not limited to, the following:

- Under section 1512 of the ARRA, an SEA must report, on a quarterly basis, specific information regarding its obligation and use of IDEA section 611 ARRA funds.
- Under 2 CFR 176.210, an SEA and its LEAs must track IDEA, section 611 ARRA funds separately from their regular FY 2009 allocations, which will necessitate increased data management and collection.
- An SEA will likely assume increased administrative responsibilities in a number of other areas related to ARRA data collection activities, including the following:
  - ○ Providing guidance to LEAs regarding ARRA data quality and monitoring the quality of the ARRA data that LEAs must provide.
  - ○ Data collection related to monitoring and auditing LEAs' use of IDEA section 611 ARRA funds.
  - ○ Addressing additional data collection requirements that could affect the programs funded under section 611 of IDEA.

The ARRA includes additional data requirements that an SEA must implement under Title I, part A and IDEA section 611 that Congress could not have contemplated when initially establishing the administrative caps for both of these programs. In the absence of the ARRA, an SEA already has many responsibilities for ensuring that its LEAs carry out their Title I, part A and IDEA section 611 programs properly in order to achieve program goals and follow program requirements that require expending administrative funds in order to ensure that programs are carried out effectively. Similarly, the new ARRA responsibilities related to data collection also will require an SEA to expend administrative resources.

In recognition of these additional ARRA administrative responsibilities that an SEA will assume, pursuant to his authority in section 1552 of the ARRA, the Secretary is proposing in this notice to adjust the caps on State administration under Title I, part A and section 611 of IDEA to help an SEA defray the costs of implementing the data collection requirements that are associated with the ARRA.

We note that the proposed adjustments reflect the Department's intention to provide SEAs with additional administrative funds to help them meet ARRA data collection requirements without substantially diminishing Title I, part A and IDEA section 611 resources at the LEA level. The Department's proposal for Title I, part A and IDEA section 611 is based on a percentage of the amount each SEA receives under each of these programs through the ARRA. We arrived at the proposed percentages, floors and ceilings following consultations with staff in several SEAs, our own experience with data collections, a review of the ARRA data collection requirements, and consideration of the amounts SEAs can currently reserve for administration under both programs.

The proposal includes (1) A floor to the amount that could be adjusted that would enable SEAs, on average, to add at least the equivalent of one additional full-time-equivalent (FTE) employee for each program, and (2) a ceiling that, although limiting the amount that could be adjusted, would enable SEAs, on average, to add ten FTEs for Title I, part A and five FTEs for IDEA section 611. The Department is proposing a higher percentage for Title I, part A than IDEA section 611 because there are more ARRA-related data collection activities associated with Title I, part A.

Proposed Adjustments

Title I, Part A:

Notwithstanding section 1004(b) of the ESEA and 34 CFR 200.100(b)(3), the Secretary proposes under Title I, part A to:

1. *Provide administrative funds to support ARRA data collection excluding data collection for obtaining and implementing Title I, part A waivers related to the ARRA and maintenance of effort.* The Secretary proposes to adjust the statutory cap on State administration under section 1004(b) of the ESEA to permit an SEA to reserve, from its FY 2009 Title I, part A allocation, an amount equal to or less than the figure shown for the SEA in Column 2 in Table 1 to help defray the costs associated with Title I, part A ARRA data collection. The amount shown in Column 2 for each State is equal to .3 percent of the portion of the State's FY 2009 Title I, part A allocation attributable to the ARRA, or $600,000, whichever is less.[1] A State's amount in Column 2 is $100,000 if .3 percent of the State's Title I, part A ARRA allocation is less than $100,000.

2. *Provide administrative funds to support ARRA data collection including data collection for obtaining and implementing Title I, part A waivers related to the ARRA and maintenance of effort.* The Secretary proposes to allow an SEA that requests and receives a waiver under section C (Waivers related to Title I, part A ARRA Funds) or section E (Waivers of Maintenance of Effort for LEAs) of the Department's Non-Regulatory Guidance on Title I, part A Waivers[2] (Title I, part A Waiver Guidance) to reserve a larger amount of additional administrative funds than it would otherwise be permitted to reserve. Specifically, in this case, the Secretary proposes to permit an SEA to reserve, from its FY 2009 Title I, part A allocation, an amount equal to or less than the figure shown for the State in Column 3 in Table 1. These funds can help defray the costs associated with Title I, part A ARRA data collection, including additional data collection costs that an SEA may incur in processing requests from its LEAs that wish to benefit from the SEA's waiver. These additional resources also should provide the SEA with an incentive to use the process for obtaining waivers outlined in the Title I, part A Waiver Guidance.

The amount shown in Column 3 for each State is equal to .5 percent of the portion of the State's FY 2009 Title I, part A allocation attributable to the ARRA, or $1,000,000, whichever is less. A State's amount in Column 3 is

[1] The U.S. Department of Education's budget page [available at *http://www.ed.gov/about/overview/budget/statetables/10stbyprogram.pdf*] shows the amount each State received in Title I, Part A ARRA funds.

[2] The guidance provides comprehensive information on how to request a waiver of specific statutory and regulatory provisions of Title I, part A and is available at [*http://www.ed.gov/programs/titleiparta/title-i-waiver.doc*].

$200,000 if .5 percent of the State's Title I, part A ARRA allocation is less than $200,000.

The amount in Column 2 or 3 that each SEA may reserve, as proposed in this notice, is in addition to the amount the SEA is able to reserve for State administration under section 1004(b) of the ESEA.

Note: An SEA may only reserve additional funds for administration up to the amount shown in Column 3 if it has received a waiver from the Department under section C or E of the Title I, part A Waiver Guidance. An SEA that has not received such a waiver may only reserve additional funds for administration up to the amount shown in Column 2. (Each column represents a total; the amounts are not cumulative.)

TABLE 1—(TITLE I, PART A)

Column 1	Column 2 (Administrative funds for ARRA data collection excluding data collection for waivers)*	Column 3 (Administrative funds for ARRA data collection including data collection for waivers*
Alabama	$488,908	$814,846
Alaska	100,000	200,000
Arizona	585,262	975,437
Arkansas	333,276	555,461
California	600,000	1,000,000
Colorado	333,408	555,680
Connecticut	212,143	353,571
Delaware	100,000	200,000
District Of Columbia	112,807	200,000
Florida	600,000	1,000,000
Georgia	600,000	1,000,000
Hawaii	100,000	200,000
Idaho	104,867	200,000
Illinois	600,000	1,000,000
Indiana	506,031	843,385
Iowa	154,491	257,485
Kansas	212,604	354,340
Kentucky	466,044	776,739
Louisiana	531,470	885,784
Maine	111,553	200,000
Maryland	407,875	679,792
Massachusetts	491,041	818,401
Michigan	600,000	1,000,000
Minnesota	284,133	473,555
Mississippi	398,665	664,442
Missouri	443,185	738,642
Montana	103,950	200,000
Nebraska	143,427	239,045
Nevada	210,378	350,631
New Hampshire	100,000	200,000
New Jersey	548,914	914,856
New Mexico	242,410	404,017
New York	600,000	1,000,000
North Carolina	600,000	1,000,000
North Dakota	100,000	200,000
Ohio	600,000	1,000,000
Oklahoma	328,328	547,213
Oregon	281,207	468,678
Pennsylvania	600,000	1,000,000
Puerto Rico	600,000	1,000,000
Rhode Island	107,503	200,000
South Carolina	428,517	714,195
South Dakota	103,950	200,000
Tennessee	582,225	970,374
Texas	600,000	1,000,000
Utah	148,609	247,681
Vermont	100,000	200,000
Virginia	496,056	826,760
Washington	405,369	675,615
West Virginia	182,944	304,906
Wisconsin	443,188	738,647
Wyoming	100,000	200,000

* For the purposes of this table, "waivers" refer to waivers described in section C or E of the Title I, part A Waiver Guidance that have been obtained by an SEA from the Department.

IDEA section 611:

Notwithstanding section 611(c)(1) of IDEA and 34 CFR 300.704(a), the Secretary proposes to adjust the statutory cap on State administration to permit an SEA to reserve an amount from its FY 2009 IDEA section 611 ARRA allocation equal to or less than the figure shown for such State in Column 2 in Table 2 to help defray the costs associated with ARRA data collection under IDEA section 611. The amount for each State shown in Column 2 is equal to .1 percent of the portion of the State's FY 2009 IDEA section 611 allocation attributable to the ARRA, or $500,000, whichever is less.[3] A State's amount in Column 2 is $100,000 if .1 percent of the State's IDEA section 611 ARRA allocation is less than $100,000. The amount each SEA may reserve, as proposed in this notice, is in addition to the amount the SEA is able to reserve for State administration under section 611(e)(1) of the IDEA.

TABLE 2—IDEA SECTION 611

Column 1	Column 2
Alabama	$181,865
Alaska	100,000
Arizona	178,476
Arkansas	112,178
California	500,000
Colorado	148,731
Connecticut	132,971
Delaware	100,000
District Of Columbia	100,000
Florida	500,000
Georgia	313,758
Hawaii	100,000
Idaho	100,000
Illinois	500,000
Indiana	253,535
Iowa	122,095
Kansas	106,872
Kentucky	157,570
Louisiana	188,750
Maine	100,000
Maryland	200,242
Massachusetts	280,552
Michigan	400,608
Minnesota	189,839
Mississippi	117,836
Missouri	227,175
Montana	100,000
Nebraska	100,000
Nevada	100,000
New Hampshire	100,000
New Jersey	360,691
New Mexico	100,000
New York	500,000
North Carolina	314,410
North Dakota	100,000
Ohio	437,736
Oklahoma	147,925

[3] The U.S. Department of Education's budget page [available at *http://www.ed.gov/about/overview/budget/statetables/10stbyprogram.pdf*] shows the amount each State received in IDEA section 611 ARRA funds.

TABLE 2—IDEA SECTION 611—Continued

Column 1	Column 2
Oregon	128,979
Pennsylvania	427,178
Puerto Rico	109,098
Rhode Island	100,000
South Carolina	173,240
South Dakota	100,000
Tennessee	229,613
Texas	500,000
Utah	105,541
Vermont	100,000
Virginia	281,415
Washington	221,357
West Virginia	100,000
Wisconsin	208,200
Wyoming	100,000

Note: The proposed adjustments in this notice are based on funds available to each State under the ARRA and do not permit an SEA to increase the amount available for State administration from its regular FY 2009 Title I, part A allocation or its regular FY 2009 IDEA section 611 allocation in excess of the respective statutory cap. Also, the adjustments in this notice to the amounts an SEA may reserve for administration under Title I, part A and IDEA section 611 do not apply to the reservation of funds for administration in subsequent years (*i.e.,* Title I, part A and IDEA section 611 allocations for Federal Fiscal Year 2010 and beyond).

Executive Order 12866:

Under Executive Order 12866, the Secretary must determine whether this regulatory action is ''significant'' and therefore subject to the requirements of the Executive Order and subject to review by OMB. Section 3(f) of Executive Order 12866 defines a ''significant regulatory action'' as an action likely to result in a rule that may (1) Have an annual effect on the economy of $100 million or more, or adversely affect a sector of the economy, productivity, competition, jobs, the environment, public health or safety, or State, local or tribal governments, or communities in a material way (also referred to as an ''economically significant'' rule); (2) create serious inconsistency or otherwise interfere with an action taken or planned by another agency; (3) materially alter the budgetary impacts of entitlement grants, user fees, or loan programs or the rights and obligations of recipients thereof; or (4) raise novel legal or policy issues arising out of legal mandates, the President's priorities, or the principles set forth in the Executive order. Pursuant to the Executive order, the Secretary has determined that this regulatory action is significant under section 3(f)(4) of the Executive order.

This notice has been reviewed in accordance with Executive Order 12866. Under the terms of the order, we have assessed the potential costs and benefits of this proposed regulatory action and we have determined that the benefits of the proposed adjustments justify the costs.

We have determined, also, that this proposed regulatory action does not unduly interfere with State, local, and tribal governments in the exercise of their governmental functions.

Regulatory Flexibility Act Certification: The Secretary certifies that this proposed regulatory action will not have a significant economic impact on a substantial number of small entities. The only entities affected by this proposed regulatory action are States, which are not considered small entities.

Accessible Format: Individuals with disabilities may obtain this document in an accessible format (*e.g.,* braille, large print, audiotape, or computer diskette) on request to the program contact person listed under **FOR FURTHER INFORMATION CONTACT**.

Electronic Access to This Document: You may view this document, as well as all other documents of this Department published in the **Federal Register**, in text or Adobe Portable Document Format (PDF) on the Internet at the following site: *http://www.ed.gov/news/fedregister.*

To use PDF you must have Adobe Acrobat Reader, which is available free at this site. If you have questions about using PDF, call the U.S. Government Printing Office (GPO), toll free, at 1–888–293–6498; or in the Washington, DC, area at (202) 512–1530.

Note: The official version of this document is the document published in the **Federal Register**. Free Internet access to the official edition of the **Federal Register** and the Code of Federal Regulations is available on GPO Access at: *http://www.gpoaccess.gov/nara/index.html.*

Dated: August 12, 2009.

Arne Duncan,

Secretary of Education.

[FR Doc. E9–19662 Filed 8–14–09; 8:45 am]

BILLING CODE 4000–01–P

DEPARTMENT OF EDUCATION

Office of Elementary and Secondary Education; Overview Information; Impact Aid Program—American Recovery and Reinvestment Act of 2009—Impact Aid Discretionary Construction Program; Notice Inviting Applications for New Awards under the American Recovery and Reinvestment Act of 2009

Catalog of Federal Domestic Assistance (CFDA) Number: 84.401.

Dates:

Applications Available: August 17, 2009.

Deadline for Transmittal of Applications: October 1, 2009.

Deadline for Intergovernmental Review: November 30, 2009.

Full Text of Announcement

I. Funding Opportunity Description

Purpose of Program: To provide grants for emergency repairs and modernization of school facilities to certain local educational agencies (LEAs) that submitted timely applications eligible for funding under either section 8002 (Payments for Federal Property) or section 8003 (Basic Support Payments) of the Elementary and Secondary Education Act of 1965, as amended (ESEA), for FY 2008. Funds awarded under this competition are appropriated under the American Recovery and Reinvestment Act of 2009, Public Law 111–5 (ARRA).

Priorities: In this notice, the Secretary is establishing two priorities for the ARRA Impact Aid Discretionary Construction Program grant competition. Competitive Preference Priority 1 is from section 805(b)(2)(A) of the ARRA. Competitive Preference Priority 2 is being established in accordance with section 437(d)(1) of the General Education Provisions Act (GEPA), 20 U.S.C. 1232(d)(1).

Competitive Preference Priorities: These priorities are competitive preference priorities. Under 34 CFR 75.105(c)(2)(i), we will award an additional 5 points to emergency repair applications and up to 2 points for projects that are projected to be completed within 24 months of receiving awards.

These priorities are:

Competitive Preference Priority 1. Projects that propose emergency repairs of school facilities will be awarded 5 points.

Competitive Preference Priority 2. Emergency or modernization projects that are projected to be completed within 24 months of receiving awards. The Secretary will award 2 points to applications for projects with proposed, feasible completion dates within 12 months of the time of award. The Secretary will allocate 1 point to applications for projects with proposed, feasible completion dates between 12 and 24 months from the time of award. Point allocations will be based on the project periods provided in the applications, subject to feasibility verification by panel reviewers. Section 805(b)(5)(D) of the ARRA provides for the Secretary to consider: ''The feasibility of project completion within 24 months from award'' in reviewing applications for grants under this program.

Waiver of Proposed Rulemaking: Under the Administrative Procedure Act (5 U.S.C. 553), the Department generally offers interested parties the opportunity to comment on proposed priorities. Section 437(d)(1) of GEPA, however, allows the Secretary to exempt from rulemaking requirements, regulations governing the first grant competition under a new or substantially revised program authority. This is the first grant competition for this program under section 8007(b) of the Impact Aid Program (Title VIII of the ESEA) and the ARRA and therefore qualifies for this exemption. In order to ensure timely grant awards, the Secretary has decided to forego public comment on Competitive Preference Priority 2 under section 437(d)(1) of GEPA. This priority will apply to the ARRA Impact Aid Discretionary Construction Program grant competition only.

Program Authority: 20 U.S.C. 7707(b); Division A, Title VIII of the American Recovery and Reinvestment Act of 2009, Public Law 111–5.

Applicable Regulations: (a) The Education Department General Administrative Regulations (EDGAR) in 34 CFR parts 75 (except for 34 CFR 75.600 through 75.617), 77, 79, 80, 82, 84, 85, 97, 98, and 99. (b) The regulations for this program in 34 CFR part 222, except for the regulations in 34 CFR 222.170–171, 222.177–184, 222.188–189, and 222.193–195(a).

Note: The regulations in 34 CFR part 79 apply to all applicants except Federally recognized Indian Tribes.

II. Award Information

Type of Award: Discretionary grant.

Estimated Available Funds: $59,400,000.

Estimated Range of Awards: $50,000–$5,000,000.

Estimated Average Size of Awards: $2,500,000.

Estimated Number of Awards: 24.

Note: The Department is not bound by any estimates in this notice.

Project Period: Up to 36 months. We will determine each project period based on the nature of the project proposed and the time needed to complete the project. We will specify this period in the Grant Award Notification.

III. Eligibility Information

1. *Eligible Applicants:* Under Section 8005(b)(4) of the Recovery Act, an LEA is eligible to receive a grant under this competition if the LEA timely submitted an application eligible for funding under either Section 8002 (Payments for Federal Property) or Section 8003 (Basic Support Payments) for FY 2008; and has a total assessed value of real property available that may be taxed for school purposes (referred to hereinafter as assessed value) of less than $100 million or has an average assessed value per pupil that is less than the State average assessed value per pupil. Applicants may submit only one application for one facility within the LEA.

2. a. *Cost Sharing or Matching: See* 20 U.S.C. 7707(b)(5) and 34 CFR 222.174, 222.191, and 222.192. Under section 805(b)(5)(E) of the ARRA, in reviewing proposed awards, the Secretary considers the funds available to the grantee from other sources, including local, State, and other Federal funds. Consistent with 34 CFR 222.192, applicants will be required to submit financial reports for FYs 2007, 2008, and 2009, showing closing balances for all school funds. If satisfactory data are not available for these years, the Secretary uses data from the most recent three consecutive fiscal years for which data that are satisfactory to the Secretary are available. If funds are available at the close of FY 2009 or the most recent fiscal year available that are not obligated for capital purposes, those funds will be considered as available for the proposed project, which may reduce or eliminate the award.

b. *Supplement-Not-Supplant:* As outlined in 34 CFR 222.174, grants made under this program are subject to supplement, not supplant funding provisions. Grant funds under this program may not be used to supplant or replace other available non-Federal construction money.

IV. Application and Submission Information

1. *Address to Request Application Package:* An electronic application is available at: *http://e-grants.ed.gov.* For assistance, please contact Kristen Walls-Rivas, Impact Aid Program, U.S. Department of Education, 400 Maryland

Avenue, SW., room 3C155, Washington, DC 20202–6244. FAX: 1–866–799–1272.

If you use a telecommunications device for the deaf (TDD), call the Federal Relay Service (FRS), toll free, at 1–800–877–8339.

Individuals with disabilities can obtain a copy of the application package in an accessible format (*e.g.*, braille, large print, audiotape, or compact disc) by contacting the person or team listed under *Accessible Format* in section VIII of this notice.

2. *Content and Form of Application Submission:* Requirements concerning the content of an application, together with the forms you must submit, are in the application package for this program. Applicants must complete and submit all forms contained in the application package in order to be considered for funding under this program. Applicants may submit only one application for one facility within the LEA.

Page Limit: There is a three-page limit for the project narratives for the emergency and modernization applications. There is a two-page limit for the justification for rebuilding. All narratives must be double spaced in 12-point font. Applications that exceed the page limit or are not in the proper format will be rejected.

3. *Submission Dates and Times:*

Applications Available: August 17, 2009.

Deadline for Transmittal of Applications: October 1, 2009.

We will not consider an application that does not comply with the deadline requirements.

Individuals with disabilities who need an accommodation or auxiliary aid in connection with the application process should contact the person listed under **FOR FURTHER INFORMATION CONTACT** in section VII of this notice.

Deadline for Intergovernmental Review: November 30, 2009.

4. *Intergovernmental Review:* This program is subject to Executive Order 12372 and the regulations in 34 CFR part 79. Information about Intergovernmental Review of Federal Programs under Executive Order 12372 is in the application package for this program.

5. *Funding Restrictions:* Applicants may submit only one application for one facility within the LEA. The Department may elect not to fund an application for an LEA based on factors specified in 34 CFR 75.217, including the applicant's past performance and use of funds under a prior award. Unallowable costs are specified in 34 CFR 222.173. Grant recipients must, in accordance with Federal, State and local laws, use emergency repair and modernization grants only for permissible construction activities at public elementary and secondary school facilities. The scope of a selected project will be identified as part of the final grant award conditions. A grantee must also ensure that its construction expenditures under this program meet the requirements of 34 CFR 222.172 (allowable program activities) and 34 CFR 222.173 and section 1604 of the ARRA (prohibited activities). If applying for new construction, the LEA must hold title to the existing facility at the time of application.

We reference additional regulations outlining funding restrictions in the *Applicable Regulations* section of this notice.

6. *Other Submission Requirements:* Applications for grants under this competition must be submitted electronically unless you qualify for an exception to this requirement in accordance with the instructions in this section.

a. Electronic Submission of Applications

Applications for grants under the ARRA Impact Aid Discretionary Construction Grant Program, CFDA number 84.401, must be submitted electronically using e-Application, accessible through the Department's e-Grants system, accessible through the e-Grants Web site at: *http://e-grants.ed.gov*.

We will reject your application if you submit it in paper format unless, as described elsewhere in this section, you qualify for one of the exceptions to the electronic submission requirement and submit, no later than two weeks before the application deadline date, a written statement to the Department that you qualify for one of these exceptions. Further information regarding calculation of the date that is two weeks before the application deadline date is provided later in this section under *Exception to Electronic Submission Requirement.*

While completing your electronic application, you will be entering data online that will be saved into a database. You may not e-mail an electronic copy of a grant application to us.

Please note the following:

- You must complete the electronic submission of your grant application by 4:30:00 p.m., Washington, DC time, on the application deadline date. E-Application will not accept an application for this competition after 4:30:00 p.m., Washington, DC time, on the application deadline date. Therefore, we strongly recommend that you do not wait until the application deadline date to begin the application process.
- The hours of operation of the e-Grants Web site are 6:00 a.m. Monday until 7:00 p.m. Wednesday; and 6:00 a.m. Thursday until 8:00 p.m. Sunday, Washington, DC time. Please note that, because of maintenance, the system is unavailable between 8:00 p.m. on Sundays and 6:00 a.m. on Mondays, and between 7:00 p.m. on Wednesdays and 6:00 a.m. on Thursdays, Washington, DC time. Any modifications to these hours are posted on the e-Grants Web site.
- You will not receive additional point value because you submit your application in electronic format, nor will we penalize you if you qualify for an exception to the electronic submission requirement, as described elsewhere in this section, and submit your application in paper format.
- You must submit all documents electronically, including all information you typically provide on the following forms: the Application for the ARRA Impact Aid Discretionary Construction Program and all necessary assurances and certifications. Cover pages, assurances, and certifications may be sent either by facsimile or by e-mail. All additional narrative documents must be attached to the application as files in a .DOC (document), .RTF (rich text), or .PDF (Portable Document) format. If you upload a file type other than the three file types specified in this paragraph or submit a password protected file, we will not review that material.
- Your electronic application must comply with any page limit requirements described in this notice.
- Prior to submitting your electronic application, you may wish to print a copy of it for your records.
- After you electronically submit your application, you will receive an automatic acknowledgment that will include a PR/Award number (an identifying number unique to your application).
- After you electronically submit your application, fax or e-mail a signed copy of the cover pages, assurances, and the emergency certification form for the Application for Impact Aid Discretionary Construction Program—ARRA Grants to the Impact Aid Program after following these steps:

(1) Print a copy of the application from e-Application for your records.

(2) Have the applicant's Authorized Representative date and sign the cover page and all of the assurance pages.

(3) Have the independent certifying official sign the certification for the application.

(4) Place the PR/Award number in the upper right hand corner of the hard-copy signature page of the Application for the ARRA Impact Aid Discretionary Construction Program.

(5) Fax or e-mail the signed cover page, independent official certification, and all assurances for the ARRA Impact Aid Discretionary Construction Program by 12:00:00 midnight, Washington, DC time, on the application deadline to the Impact Aid Program at 1–866–799–1272 or by e-mail to *Impact.Aid@ed.gov*.

• We may request that you provide us original signatures on other forms at a later date.

Application Deadline Date Extension in Case of e-Application Unavailability: If you are prevented from electronically submitting your application on the application deadline date because e-Application is unavailable, we will grant you an extension of one business day to enable you to transmit your application electronically, by mail, or by hand delivery. We will grant this extension if—

(1) You are a registered user of e-Application and you have initiated an electronic application for this competition; and

(2)(a) E-Application is unavailable for 60 minutes or more between the hours of 8:30 a.m. and 3:30 p.m., Washington, DC time, on the application deadline date; or

(b) E-Application is unavailable for any period of time between 3:30 p.m. and 4:30:00 p.m., Washington, DC time, on the application deadline date.

We must acknowledge and confirm these periods of unavailability before granting you an extension. To request this extension or to confirm our acknowledgment of any system unavailability, you may contact either (1) the person listed elsewhere in this notice under **FOR FURTHER INFORMATION CONTACT** (*see* VII. Agency Contact) or (2) the e-Grants help desk at 1–888–336–8930. If E-Application is unavailable due to technical problems with the system and therefore the application deadline is extended, an e-mail will be sent to all registered users who have initiated an e-Application. Extensions referred to in this section apply only to the unavailability of e-Application.

Exception to Electronic Submission Requirement: You qualify for an exception to the electronic submission requirement, and may submit your application in paper format, if you are unable to submit an application through e-Application because—

• You do not have access to the Internet; or

• You do not have the capacity to upload large documents to e-Application; and

• No later than two weeks before the application deadline date (14 calendar days or, if the fourteenth calendar day before the application deadline date falls on a Federal holiday, the next business day following the Federal holiday), you mail or fax a written statement to the Department, explaining which of the two grounds for an exception prevent you from using the Internet to submit your application. If you mail your written statement to the Department, it must be postmarked no later than two weeks before the application deadline date. If you fax your written statement to the Department, we must receive the faxed statement no later than two weeks before the application deadline date.

Address and mail or fax your statement to: Kristen Walls-Rivas, Impact Aid Program, U.S. Department of Education, 400 Maryland Avenue, SW., Room 3C155, Washington, DC 20202–6244. FAX: 1–866–799–1272.

Your paper application must be submitted in accordance with the mail or hand delivery instructions described in this notice.

b. Submission of Paper Applications by Mail

If you qualify for an exception to the electronic submission requirement, you may mail (through the U.S. Postal Service or a commercial carrier) your application to the Department. You must mail the original and two copies of your application, on or before the application deadline date, to the Department at the following address: U.S. Department of Education, Impact Aid Program, Attention: (CFDA Number 84.401), Room 3C155, 400 Maryland Avenue, SW., Washington, DC 20202–6244.

You must show proof of mailing consisting of one of the following:

(1) A legibly dated U.S. Postal Service postmark.

(2) A legible mail receipt with the date of mailing stamped by the U.S. Postal Service.

(3) A dated shipping label, invoice, or receipt from a commercial carrier.

(4) Any other proof of mailing acceptable to the Secretary of the U.S. Department of Education.

If you mail your application through the U.S. Postal Service, we do not accept either of the following as proof of mailing:

(1) A private metered postmark.

(2) A mail receipt that is not dated by the U.S. Postal Service.

If your application is postmarked after the application deadline date, we will not consider your application.

Note: The U.S. Postal Service does not uniformly provide a dated postmark. Before relying on this method, you should check with your local post office.

c. Submission of Paper Applications by Hand Delivery

If you qualify for an exception to the electronic submission requirement, you (or a courier service) may deliver your paper application to the Department by hand. You must deliver the original and two copies of your application, by hand, on or before the application deadline date, to the Department at the following address: U.S. Department of Education, Impact Aid Program, Attention: (CFDA Number 84.401), Room 3C155, 400 Maryland Avenue, SW., Washington, DC 20202–6244.

The Impact Aid Program accepts hand deliveries daily between 8:00 a.m. and 4:30:00 p.m., Washington, DC time, except Saturdays, Sundays, and Federal holidays.

Note for Mail or Hand Delivery of Paper Applications: If you mail or hand deliver your application to the Department—

(1) You must indicate on the envelope—if not provided by the Department—the CFDA number, including suffix letter, if any, of the competition under which you are submitting your application; and

(2) The Impact Aid Program will mail to you a notification of receipt of your grant application. If you do not receive this grant notification within 15 business days from the application deadline date, you should call the U.S. Department of Education Impact Aid Program at (202) 260–3858.

V. Application Review Information

1. *Selection Criteria:* The selection criteria for this competition are from section 805 of the ARRA and 20 U.S.C. 7707(b) as applicable and are further clarified in 34 CFR 222.185 and 222.186 and are described in the following paragraphs. The Secretary gives distinct weight to the listed selection criteria. The maximum score for each criterion is indicated in parentheses. Within each criterion, the Secretary evaluates each factor equally, unless otherwise specified. The maximum score that an application may receive for the selection criteria is 100 points.

For emergency applications, the criteria and weights are as follows:

(1) Need for project/severity of the school facility problem to be addressed by the proposed project. (Up to 34 points)

(a) Identification of a valid emergency condition that threatens the health and/

or safety of the facility's occupants and the severity of the emergency condition. Applicants should describe the systems or areas of the facility involved, *e.g.,* HVAC, roof, floor, windows; the type of space affected, such as instructional, resource, food service, recreational, general support, or other areas; the percentage of building occupants affected by the emergency; and the importance of the facility or affected area to the instructional program.

(b) Impact of the emergency condition on the health and safety of the building occupants or on program delivery.

(c) Project urgency or risk to occupants if the facility condition is not addressed. Applicants should describe projected increased future costs and effects on occupants if the condition is not addressed; the anticipated effect of the proposed project on the useful life of the facility or the future need for major construction; and the age and condition of the facility and date of any previous renovation of affected areas.

(2) Extent to which the proposed project addresses the emergency condition. (Up to 26 points)

(a) Extent to which the described emergency condition is consistent with the Independent Certification.

(b) Ability of the proposed project to respond to the emergency condition. The readers will evaluate the extent to which the scope and cost of the proposed project correspond with the identified emergency condition.

(c) The justification for rebuilding, if proposed. The readers will assess the validity of the justification for rebuilding a facility instead of renovating it.

(3) The extent to which the project will use energy-efficient and recyclable materials. (Up to 12 points total)

(4) The extent to which the project will use non-traditional or alternative building methods and materials. (Up to 12 points total)

(a) Cost savings associated with the use of alternative building methods and materials.

(b) Time savings associated with the use of alternative building methods and materials.

(5) Ability to respond or pay. (Up to 16 points total)

(a) If an applicant is eligible because the applicant's assessed value of real property per pupil is less than the State's average assessed value per pupil, points will be distributed based on the LEA's ranking within the State. The LEAs ranked below the State average will be divided into quartiles. All sixteen points will be allocated to LEAs in the quartile with the lowest average assessed value per pupil and only four points will be allocated to LEAs in the quartile with the highest average assessed value per pupil of those ranked. (Up to 16 points)

(b) If an applicant is eligible because the applicant's total assessed value of real property is less than $100,000,000, points will be distributed based on four groupings of LEAs in the State with total assessed values of less than $100 million. LEAs with total assessed values of less than $25,000,000 would receive 16 points. LEAs with total assessed values between $25,000,000 and $50,000,000 would receive 12 points. LEAs with total assessed values between $50,000,000 and $75,000,000 would receive 8 points. LEAs with total assessed values between $75,000,000 and $99,999,999 would receive 4 points. (Up to 16 points)

For modernization applications, the criteria and weights are as follows:

(1) Justification that the proposed project is a valid modernization need because either:

- The facility is unable to meet the needs of the current enrollment (*Example:* The building capacity is 300 students while the current enrollment is 350; three additional classrooms are needed to meet State standards for capacity and a maximum 20-to-1 student/teacher ratio.); or
- The facility is unable to support the provision of a comprehensive educational program to meet State standards (*Example:* The State's high school graduation requirements include the completion of a chemistry class but the facility has no science lab.) (Up to 34 points.)

(2) Extent to which the proposed project addresses the modernization need. (Up to 26 points.)

(a) Project urgency in fiscal terms (*Examples:* The proposed project will extend the useful life of the current facility on a cost-effective basis, improve program quality with an updated facility, or delay the need to replace the facility).

(b) Extent to which the described modernization need is consistent with the Independent Certification.

(c) Ability of the proposed project to respond to the modernization need. The readers will evaluate the extent to which the scope and cost of the proposed project correspond with the identified modernization need.

(d) The justification for rebuilding, if proposed. The readers will assess the validity of the justification for rebuilding a facility instead of renovating it.

(3) The extent to which the project will use energy-efficient and recyclable materials. (Up to 12 points total)

(4) The extent to which the project will use alternative building methods and materials. (Up to 12 points total)

(a) Cost savings associated with the use of alternative building methods and materials.

(b) Time savings associated with the use of alternative building methods and materials.

(5) Ability to respond or pay. (Up to 16 points total)

(a) If an applicant is eligible because the applicant's assessed value of real property per pupil is less than the State's average assessed value per pupil, points will be distributed based on the LEA's ranking within the State. The LEAs ranked below the State average will be divided into quartiles. All sixteen points will be allocated to LEAs in the quartile with the lowest average assessed value per pupil and only four points will be allocated to LEAs in the quartile with the highest average assessed value per pupil of those ranked. (Up to 16 points)

(b) If an applicant is eligible because the applicant's total assessed value of real property is less than $100,000,000, points will be distributed based on four groupings of LEAs in the State with total assessed values of less than $100 million. LEAs with total assessed values of less than $25,000,000 would receive 16 points. LEAs with total assessed values between $25,000,000 and $50,000,000 would receive 12 points. LEAs with total assessed values between $50,000,000 and $75,000,000 would receive 8 points. LEAs with total assessed values between $75,000,000 and $99,999,999 would receive 4 points. (Up to 16 points)

2. *Review and Selection Process:* Upon receipt, Impact Aid program staff will screen all applications to eliminate any that do not meet the eligibility requirements, are incomplete, exceed the page limit requirement, are not properly formatted, or are late. Program staff will also calculate the scores for each application under competitive preference priorities 1 and 2 and criterion (5)—ability to respond or pay. Panel reviewers will assess the applications under criteria (1), (2), (3) and (4), and the feasibility of the proposed completion date under competitive preference priority 2.

Applications are ranked based on the total number of points received during the review process.

The Department may elect not to fund applications for an LEA based on factors specified in 34 CFR 75.217, including the applicant's performance and use of funds under a prior award.

VI. Award Administration Information

1. *Award Notices:* If your application is successful, we will notify your U.S. Representative and U.S. Senators and send you a Grant Award Notification (GAN). We may notify you informally, also.

If your application is not evaluated or not selected for funding, we will notify you.

2. *Administrative and National Policy Requirements:* We identify administrative and national policy requirements in the application package and reference these and other requirements in the *Applicable Regulations* section of this notice. In addition, there are a number of ARRA requirements that are detailed in the ARRA Impact Aid Frequently Asked Questions (FAQs), which can be accessed at the following site: *http://www.ed.gov/policy/gen/leg/recovery/guidance/impactaid.pdf. See* for example, FAQs 12 through 16 regarding reporting, infrastructure investment certification, Buy American, and National Environmental Protection Act provisions, and FAQs 19 through 21 regarding Davis-Bacon wage, Indian Preference contract, and civil rights law requirements. We anticipate providing further guidance on the infrastructure investment certifications at a later time.

We reference the regulations outlining the terms and conditions of an award in the *Applicable Regulations* section of this notice and include these and other specific conditions in the GAN. The GAN also incorporates the approved application as part of your binding commitments under the grant.

3. *Reporting:* At the end of your project period, you must submit a final performance report, including financial information, as directed by the Secretary. If you receive a multi-year award, you must submit an annual performance report that provides the most current performance and financial expenditure information as directed by the Secretary under 34 CFR 75.118. The Secretary may also require more frequent performance reports under 34 CFR 75.720(c). In addition to the reporting requirements specified in the regulations, there are additional reporting requirements for these awards as specified under section 1512 of ARRA.

Funds awarded through this program were appropriated under the American Recovery and Reinvestment Act (ARRA) of 2009, Public Law 111–5, and are subject to additional accountability and transparency reporting requirements, which are described in section 1512(c) of the ARRA. Recipients of ARRA funds must submit quarterly reports on the expenditure of these funds no later than ten days after the end of each calendar quarter through a centralized reporting Web site administered by the Office of Management and Budget (OMB): *http://www.federalreporting.gov.* The information reported at this Web site will be available to the Department, the White House, OMB and the public on *http://www.Recovery.gov.*

At a minimum, an LEA should anticipate reporting:

- The total amounts of ARRA funds received and expended or obligated.
- The name, description, and evaluation of the project or activity's completion status.
- An estimate of the number of jobs that were saved or created with the funds.

Recipients will need to maintain accurate documentation of all ARRA expenditures to ensure that the data reported are accurate, complete, and reliable.

Additional guidance providing further detail on the quarterly report will be provided at a later time.

4. *Performance Measures:* The condition of school facilities in LEAs after completion of projects with grants under this program will be compared to the reported condition before receipt of the grants. This information will be obtained from the current Table 10 of the section 8003 application, which will be required for all grant recipients. The measure is currently in place for the regular section 8007(b) program. A second performance measure will identify the proportion of projects funded with these grants that are completed within 24 months of the awards.

VII. Agency Contact

For Further Information Contact: Kristen Walls-Rivas, Impact Aid Program, U.S. Department of Education, 400 Maryland Avenue, SW., room 3C155, Washington, DC 20202–6244. Telephone: (202) 260–3858 or by e-mail: *Impact.Aid@ed.gov.*

If you use a TDD, call the FRS, toll free, at 1–800–877–8339.

VIII. Other Information

Accessible Format: Individuals with disabilities can obtain this document and a copy of the application package in an accessible format (*e.g.,* braille, large print, audiotape, or compact disc) on request to the program contact person listed under **FOR FURTHER INFORMATION CONTACT** in section VII of this notice.

Electronic Access to This Document: You can view this document, as well as all other documents of this Department published in the **Federal Register**, in text or Adobe Portable Document Format (PDF) on the Internet at the following site: *http://www.ed.gov/news/fedregister.*

To use PDF you must have Adobe Acrobat Reader, which is available free at this site. If you have questions about using PDF, call the U.S. Government Printing Office (GPO), toll free, at 1–888–293–6498; or in the Washington, DC, area at (202) 512–1530.

Note: The official version of this document is the document published in the **Federal Register**. Free Internet access to the official edition of the **Federal Register** and the Code of Federal Regulations is available on GPO Access at: *http://www.gpoaccess.gov/nara/index.html.*

Delegation of Authority: The Secretary of Education has delegated authority to Joseph C. Conaty, Director, Academic Improvement and Teacher Quality Programs for the Office of Elementary and Secondary Education to perform the functions of the Assistant Secretary for Elementary and Secondary Education.

Dated: August 12, 2009.

Joseph C. Conaty,

Director, Academic Improvement and Teacher Quality Programs.

[FR Doc. E9–19694 Filed 8–14–09; 8:45 am]

BILLING CODE 4000–01–P

DEPARTMENT OF ENERGY

Agency Information Collection Extension

AGENCY: U.S. Department of Energy.

ACTION: Notice and request for comments.

SUMMARY: The Department of Energy (DOE), pursuant to the Paperwork Reduction Act of 1995, is amending a **Federal Register** Notice published in the March 13, 2009, at 74 FR 10902. That Notice informed the public of the Department's intention to extend, for three years, an information collection request with the Office of Management and Budget (OMB). Comments were invited on: (a) Whether the extended collection of information is necessary for the proper performance of the functions of the agency, including whether the information shall have practical utility; (b) the accuracy of the agency's estimate of the burden of the proposed collection of information, including the validity of the methodology and assumptions used; (c) ways to enhance the quality, utility, and clarity of the information to be collected; and (d) ways to minimize the burden of the collection of information

on respondents, including through the use of automated collection techniques or other forms of information technology. The Department is amending this Notice to increase its estimate of the burden of the collection. The increase is the result of the American Recovery and Reinvestment Act (Act). DOE's original burden estimate was based on 24,241 recipients with a burden of 239,458 hours. The Act will increase the Department's awards of financial assistance by approximately $24 billion resulting in a revised estimate of 59,215 recipients with a burden of approximately 926,022 hours, an increase of 686,564 hours.

DATES: Comments regarding this proposed information collection must be received on or before August 31, 2009. If you anticipate difficulty in submitting comments within that period, contact the person listed below as soon as possible.

ADDRESSES: Written comments should be sent to the following: Denise Clarke, Procurement Analyst, MA–612/L'Enfant Plaza Building, U.S. Department of Energy, 1000 Independence Avenue, SW., Washington, DC, 20585–1615, *deniset.clarke@hq.doe.gov*.

FOR FURTHER INFORMATION CONTACT: Denise Clarke, at the above address, or by telephone at (202) 287–1748.

SUPPLEMENTARY INFORMATION: This information collection request contains: (1) OMB No. 1910–0400 [Renewal]; (2) Information Collection Request Title: Financial Assistance Information Collection; (3) Purpose: This package contains information collections necessary for solicitation, award, and administration and closeout of grants and cooperative agreements; (4) Estimated Number of Respondents: 59,215; (6) Estimated Number of Burden Hours: 926,022 hours.

Statutory Authority: Federal Grant and Cooperative Agreement Act, 31 U.S.C. 6301–6308.

Issued in Washington, DC on August 10, 2009.

Edward R. Simpson,

Director, Office of Procurement and Assistance Management, Department of Energy.

[FR Doc. E9–19710 Filed 8–14–09; 8:45 am]

BILLING CODE 6450–01–P

DEPARTMENT OF ENERGY

Environmental Management Site-Specific Advisory Board, Hanford

AGENCY: Department of Energy.

ACTION: Notice of open meeting.

SUMMARY: This notice announces a meeting of the Environmental Management Site-Specific Advisory Board (EM SSAB), Hanford. The Federal Advisory Committee Act (Pub. L. 92–463, 86 Stat. 770) requires that public notice of this meeting be announced in the **Federal Register**.

DATES: Thursday, September 3, 2009, 9 a.m.–5 p.m.; Friday, September 4, 2009, 8:30 a.m.–4 p.m.

ADDRESSES: Red Lion Hotel, 1415 5th Avenue, Seattle, Washington 98101, *Phone:* (206) 971–8000 or (800) 733–5466, *Fax:* (206) 971–8101.

FOR FURTHER INFORMATION CONTACT: Paula Call, Federal Coordinator, Department of Energy Richland Operations Office, 825 Jadwin Avenue, P.O. Box 550, A7–75, Richland, WA 99352; *Phone:* (509) 376–2048; or *E-mail: Paula_K_Call@rl.gov*.

SUPPLEMENTARY INFORMATION: Purpose of the Board: The purpose of the Board is to make recommendations to DOE in the areas of environmental restoration, waste management, and related activities.

Tentative Agenda

- Agency Updates (Department of Energy Office of River Protection and Richland Operations Office; Washington State Department of Ecology; U.S. Environmental Protection Agency): American Recovery and Reinvestment Act; Annual Accomplishments and Challenges; Proposed Settlement and Tri-Party Agreement Changes; and Central Plateau Cleanup Strategy.
- Committee Updates, including: Tank Waste Committee; River and Plateau Committee; Health, Safety and Environmental Protection Committee; Public Involvement Committee; and Budgets and Contracts Committee.
- Draft Advice on Fiscal Year 2011 Budget.
- Board Business: New Committee Leadership, Process Manual Updates, Adoption of 2010 Board Priorities, and Confirmation of 2010 Board Schedule.

Public Participation: The meeting is open to the public. The EM SSAB, Hanford, welcomes the attendance of the public at its advisory committee meetings and will make every effort to accommodate persons with physical disabilities or special needs. If you require special accommodations due to a disability, please contact Paula Call at least seven days in advance of the meeting at the phone number listed above. Written statements may be filed with the Board either before or after the meeting. Individuals who wish to make oral statements pertaining to agenda items should contact Paula Call at the address or telephone number listed above. Requests must be received five days prior to the meeting and reasonable provision will be made to include the presentation in the agenda. The Deputy Designated Federal Officer is empowered to conduct the meeting in a fashion that will facilitate the orderly conduct of business. Individuals wishing to make public comment will be provided a maximum of five minutes to present their comments.

Minutes: Minutes will be available by writing or calling Paula Call's office at the address or phone number listed above. Minutes will also be available at the following Web site: *http://www.hanford.gov/?page=413&parent=397*.

Issued at Washington, DC, on August 11, 2009.

Rachel Samuel,

Deputy Committee Management Officer.

[FR Doc. E9–19706 Filed 8–14–09; 8:45 am]

BILLING CODE 6450–01–P

DEPARTMENT OF ENERGY

Biological and Environmental Research Advisory Committee

AGENCY: Department of Energy; Office of Science.

ACTION: Notice of open meeting.

SUMMARY: This notice announces a meeting of the Biological and Environmental Research Advisory Committee. Federal Advisory Committee Act (Pub. L. 92–463, 86 Stat. 770) requires that public notice of these meetings be announced in the **Federal Register**.

DATES: Tuesday, September 1, 2009, 9 a.m. to 5 p.m. and Wednesday, September 2, 2009, 9 a.m. to 12 p.m., E.D.T.

ADDRESSES: Gaithersburg Marriott Washingtonian Center, 9751 Washingtonian Blvd., Gaithersburg, MD 20878.

FOR FURTHER INFORMATION CONTACT: Dr. David Thomassen (301–903–9817; *david.thomassen@science.doe.gov*) Designated Federal Officer, Biological and Environmental Research Advisory Committee, U.S. Department of Energy, Office of Science, Office of Biological and Environmental Research, SC–23/Germantown Building, 1000 Independence Avenue, SW., Washington, DC 20585–1290. The most current information concerning this meeting can be found on the Web site: *http://www.science.doe.gov/ober/berac/announce.html*.

SUPPLEMENTARY INFORMATION: *Purpose of the Meeting:* To provide advice on a continuing basis to the Director, Office of Science of the Department of Energy, on the many complex scientific and technical issues that arise in the development and implementation of the Biological and Environmental Research Program.

Tentative Agenda

- Report from the Office of Science.
- Report from the Office of Biological and Environmental Research.
- Presentation of Workshop Reports.
- News from the Biological Systems Science and Climate and Environmental Sciences Divisions.
- Report on the Joint Genome Institute Strategic Planning.
- Discussion of BERAC Planning for Long Term Vision for the Office of Biological and Environmental Research.
- New Business.
- Public Comment.

Public Participation: The day and a half meeting is open to the public. If you would like to file a written statement with the Committee, you may do so either before or after the meeting. If you would like to make oral statements regarding any of the items on the agenda, you should contact David Thomassen at the address or telephone number listed above. You must make your request for an oral statement at least five business days before the meeting. Reasonable provision will be made to include the scheduled oral statements on the agenda. The Chairperson of the Committee will conduct the meeting to facilitate the orderly conduct of business. Public comment will follow the 10-minute rule.

Minutes: The minutes of this meeting will be available for public review and copying within 45 days at the BERAC Web site: *http://www.science.doe.gov/ober/berac/Minutes.html*.

Issued in Washington, DC on August 11, 2009.

Rachel M. Samuel,

Deputy Committee Management Officer.

[FR Doc. E9–19708 Filed 8–14–09; 8:45 am]

BILLING CODE 6450–01–P

DEPARTMENT OF ENERGY

Office of International Regimes and Agreements; Proposed Subsequent Arrangement

AGENCY: Department of Energy.

ACTION: Subsequent arrangement.

SUMMARY: This notice has been issued under the authority of Section 131 of the Atomic Energy Act of 1954, as amended (42 U.S.C. 2160). The Department is providing notice of a proposed subsequent arrangement under the Agreement for Cooperation Between the United States of America and the Government of Australia Concerning Peaceful Uses of Nuclear Energy and the Agreement Between the United States and the Argentine Republic Concerning Peaceful Uses of Nuclear Energy.

This subsequent arrangement concerns the retransfer of 10,120.40 kgs of tritiated heavy water in 46 stainless steel drums from the Australian Nuclear Science and Technology Organization (ANSTO) in Lucas Heights, Australia to NucleoElectrica Argentina SA (NA SA) in Buenos Aires, Argentina. The heavy water is 99.32% pure and contains 10 grams of tritium. The material, which is currently located at ANSTO, will be transferred to the Atuche and Embalse nuclear power stations and will be used as coolant and moderator material in these nuclear power stations operated by NA SA. ANSTO originally obtained the material from Atomic Energy Canada Limited and exchanged this material with an equivalent quantity of U.S. obligated material.

In accordance with Section 131 of the Atomic Energy Act of 1954, as amended, we have determined that this subsequent arrangement is not inimical to the common defense and security.

This subsequent arrangement will take effect no sooner than fifteen days after the date of publication of this notice.

Dated: August 10, 2009.

For the Department of Energy.

Anatoli Welihozkiy,

Director (Acting), Office of International Regimes and Agreements.

[FR Doc. E9–19704 Filed 8–14–09; 8:45 am]

BILLING CODE 6450–01–P

DEPARTMENT OF ENERGY

Federal Energy Regulatory Commission

[Project No. 13410–000]

Clean River Power MR–9, LLC; Notice of Preliminary Permit Application Accepted for Filing and Soliciting Comments, Motions To Intervene, and Competing Applications

August 6, 2009.

On March 25, 2009, Clean River Power MR–9, LLC filed an application, pursuant to section 4(f) of the Federal Power Act, proposing to study the feasibility of the Ellis Lock and Dam Water Power Project, to be located at the State of Ohio's Ellis lock and dam on the Muskingum River in Muskingum County, Ohio.

The proposed Ellis Lock and Dam Project would consist of: (1) The existing 15.3-foot-high, 340-foot-long concrete dam; (2) the existing 352-acre reservoir with a 1,461 acre-foot storage capacity; (3) a new 150-foot-long, 100-foot-wide intake structure; (4) a 40-foot-long, 100-foot-wide power canal; (5) a new powerhouse containing four proposed generating units with a total installed capacity of 2.4 megawatts; (6) a new 200-foot-long tailrace; (7) a new switchyard containing a single three-phase step-up transformer; and (8) a new 100-foot-long, 34.5-kilovolt overhead transmission line. The project would have an estimated average annual generation of 9,700 megawatt-hours.

Applicant Contact: Mr. Alan Skelly, 8425 Beechmont Avenue, Cincinnati, OH 45255, phone (513) 375–9242.

FERC Contact: Michael Spencer, (202) 502–6093.

Deadline for filing comments, motions to intervene, competing applications (without notices of intent), or notices of intent to file competing applications: 60 days from the issuance of this notice. Comments, motions to intervene, notices of intent, and competing applications may be filed electronically via the Internet. See 18 CFR 385.2001(a)(1)(iii) and the instructions on the Commission's Web site under the ''e-Filing'' link. If unable to be filed electronically, documents may be paper-filed. To paper-file, an original and eight copies should be mailed to: Kimberly D. Bose, Secretary, Federal Energy Regulatory Commission, 888 First Street, NE., Washington, DC 20426. For more information on how to submit these types of filings please go to the Commission's Web site located at *http://www.ferc.gov/filing-comments.asp.* More information about this project can be viewed or printed on the ''eLibrary'' link of Commission's Web site at *http://www.ferc.gov/docs-filing/elibrary.asp.* Enter the docket number (P–13410) in the docket number field to access the document. For assistance, call toll-free 1–866–208–3372.

Nathaniel J. Davis, Sr.,

Deputy Secretary.

[FR Doc. E9–19609 Filed 8–14–09; 8:45 am]

BILLING CODE P

DEPARTMENT OF ENERGY

Federal Energy Regulatory Commission

[Project No. 13409–000]

Julian Griggs Dam Water Power Project, LLC; Notice of Preliminary Permit Application Accepted for Filing and Soliciting Comments, Motions To Intervene, and Competing Applications

August 6, 2009.

On March 25, 2009, Julian Griggs Dam Water Power Project, LLC filed an application, pursuant to section 4(f) of the Federal Power Act, proposing to study the feasibility of the Julian Griggs Water Power Project, to be located at the City of Columbus's Julian Griggs dam on the Scioto River in Franklin County, Ohio.

The proposed Julian Griggs Project would consist of: (1) The existing 67.5-foot-high, 983-foot-long concrete dam; (2) the existing 385-acre reservoir with a 4,322 acre-foot storage capacity; (3) a new 70-foot-long intake structure; (4) two new 70-foot-long, 120-inch-diameter penstocks; (5) a new powerhouse containing two proposed generating units with a total installed capacity of 4.0 megawatts; (6) a new 100-foot-long tailrace; (7) a new switchyard containing a single three-phase step-up transformer; and (8) a new 1,100-foot-long, 34.5-kilovolt overhead transmission line. The project would have an estimated average annual generation of 12,000 megawatt-hours.

Applicant Contact: Mr. Alan Skelly, 8425 Beechmont Avenue, Cincinnati, OH 45255, phone (513) 375–9242.

FERC Contact: Michael Spencer, (202) 502–6093.

Deadline for filing comments, motions to intervene, competing applications (without notices of intent), or notices of intent to file competing applications: 60 days from the issuance of this notice. Comments, motions to intervene, notices of intent, and competing applications may be filed electronically via the Internet. See 18 CFR 385.2001(a)(1)(iii) and the instructions on the Commission's Web site under the ''e-Filing'' link. If unable to be filed electronically, documents may be paper-filed. To paper-file, an original and eight copies should be mailed to: Kimberly D. Bose, Secretary, Federal Energy Regulatory Commission, 888 First Street, NE., Washington, DC 20426. For more information on how to submit these types of filings please go to the Commission's Web site located at *http://www.ferc.gov/filing-comments.asp.* More information about this project can be viewed or printed on the ''eLibrary'' link of Commission's Web site at *http://www.ferc.gov/docs-filing/elibrary.asp.* Enter the docket number (P–13409) in the docket number field to access the document. For assistance, call toll-free 1–866–208–3372.

Nathaniel J. Davis, Sr.,

Deputy Secretary.

[FR Doc. E9–19608 Filed 8–14–09; 8:45 am]

BILLING CODE P

DEPARTMENT OF ENERGY

Federal Energy Regulatory Commission

[Project No. 13408–000]

Clean River Power MR–7, LLC; Notice of Preliminary Permit Application Accepted for Filing and Soliciting Comments, Motions To Intervene, and Competing Applications

August 6, 2009.

On March 25, 2009, Clean River Power MR–7, LLC filed an application, pursuant to section 4(f) of the Federal Power Act, proposing to study the feasibility of the Philo Lock and Dam Water Power Project, to be located at the State of Ohio's Philo lock and dam on the Muskingum River in Muskingum County, Ohio.

The proposed Philo Lock and Dam Project would consist of: (1) The existing 18.1-foot-high, 730-foot-long concrete dam; (2) the existing 533-acre reservoir with a 3,120 acre-foot storage capacity; (3) a new 150-foot-long, 125-foot-wide intake structure; (4) a 125-foot-long, 125-foot-wide power canal; (5) a new powerhouse containing five proposed generating units with a total installed capacity of 2.8 megawatts; (6) a new 175-foot-long tailrace; (7) a new switchyard containing a single three-phase step-up transformer; and (8) a new 200-foot-long, 34.5-kilovolt overhead transmission line. The project would have an estimated average annual generation of 11,100 megawatt-hours.

Applicant Contact: Mr. Alan Skelly, 8425 Beechmont Avenue, Cincinnati, OH 45255, phone (513) 375–9242.

FERC Contact: Michael Spencer, (202) 502–6093.

Deadline for filing comments, motions to intervene, competing applications (without notices of intent), or notices of intent to file competing applications: 60 days from the issuance of this notice. Comments, motions to intervene, notices of intent, and competing applications may be filed electronically via the Internet. See 18 CFR 385.2001(a)(1)(iii) and the instructions on the Commission's Web site under the ''e-Filing'' link. If unable to be filed electronically, documents may be paper-filed. To paper-file, an original and eight copies should be mailed to: Kimberly D. Bose, Secretary, Federal Energy Regulatory Commission, 888 First Street, NE., Washington, DC 20426. For more information on how to submit these types of filings please go to the Commission's Web site located at *http://www.ferc.gov/filing-comments.asp.* More information about this project can be viewed or printed on the ''eLibrary'' link of Commission's Web site at *http://www.ferc.gov/docs-filing/elibrary.asp.* Enter the docket number (P–13408) in the docket number field to access the document. For assistance, call toll-free 1–866–208–3372.

Nathaniel J. Davis, Sr.,

Deputy Secretary.

[FR Doc. E9–19607 Filed 8–14–09; 8:45 am]

BILLING CODE P

DEPARTMENT OF ENERGY

Federal Energy Regulatory Commission

[Project No. 13407–000]

Clean River Power MR–2, LLC; Notice of Preliminary Permit Application Accepted for Filing and Soliciting Comments, Motions To Intervene, and Competing Applications

August 6, 2009.

On March 25, 2009, Clean River Power MR–2, LLC filed an application, pursuant to section 4(f) of the Federal Power Act, proposing to study the feasibility of the Lowell Lock and Dam Water Power Project, to be located at the State of Ohio's Lowell lock and dam on the Muskingum River in Washington County, Ohio.

The proposed Lowell Lock and Dam Project would consist of: (1) The existing 17.5-foot-high, 840-foot-long concrete dam; (2) the existing 628-acre reservoir with a 4,492 acre-foot storage capacity; (3) a new 180-foot-long, 100-foot-wide intake structure; (4) a 150-foot-long, 100-foot-wide power canal; (5) a new powerhouse containing three proposed generating units with a total installed capacity of 4.8 megawatts; (6) a new 250-foot-long tailrace; (7) a new switchyard containing a single three-phase step-up transformer; and (8) a new 2,000-foot-long, 34.5-kilovolt overhead transmission line. The project would have an estimated average annual generation of 19,300 megawatt-hours.

Applicant Contact: Mr. Alan Skelly, 8425 Beechmont Avenue, Cincinnati, OH 45255, phone (513) 375–9242.

FERC Contact: Michael Spencer, (202) 502–6093.

Deadline for filing comments, motions to intervene, competing applications (without notices of intent), or notices of intent to file competing applications: 60 days from the issuance of this notice. Comments, motions to intervene, notices of intent, and competing applications may be filed electronically via the Internet. See 18 CFR 385.2001(a)(1)(iii) and the instructions on the Commission's Web site under the ''e-Filing'' link. If unable to be filed electronically, documents may be paper-filed. To paper-file, an original and eight copies should be mailed to: Kimberly D. Bose, Secretary, Federal Energy Regulatory Commission, 888 First Street, NE., Washington, DC 20426. For more information on how to submit these types of filings please go to the Commission's Web site located at *http://www.ferc.gov/filing-comments.asp.* More information about this project can be viewed or printed on the ''eLibrary'' link of Commission's Web site at *http://www.ferc.gov/docs-filing/elibrary.asp.* Enter the docket number (P–13407) in the docket number field to access the document. For assistance, call toll-free 1–866–208–3372.

Nathaniel J. Davis, Sr.,

Deputy Secretary.

[FR Doc. E9–19606 Filed 8–14–09; 8:45 am]

BILLING CODE P

DEPARTMENT OF ENERGY

Federal Energy Regulatory Commission

[Project No. 13406–000]

Clean River Power MR–5, LLC; Notice of Preliminary Permit Application Accepted for Filing and Soliciting Comments, Motions To Intervene, and Competing Applications

August 6, 2009.

On March 25, 2009, Clean River Power MR–5, LLC filed an application, pursuant to section 4(f) of the Federal Power Act, proposing to study the feasibility of the Malta Lock and Dam Water Power Project, to be located at the State of Ohio's Malta lock and dam on the Muskingum River in Morgan County, Ohio.

The proposed Malta Lock and Dam Project would consist of: (1) The existing 15.2-foot-high, 472-foot-long concrete dam; (2) the existing 442-acre reservoir with a 3,000 acre-foot storage capacity; (3) a new 150-foot-long, 120-foot-wide intake structure; (4) a 200-foot-long, 120-foot-wide power canal; (5) a new powerhouse containing three proposed generating units with a total installed capacity of 3.9 megawatts; (6) a new 200-foot-long tailrace; (7) a new switchyard containing a single three-phase step-up transformer; and (8) a new 1,200-foot-long, 34.5-kilovolt overhead transmission line. The project would have an estimated average annual generation of 15,800 megawatt-hours.

Applicant Contact: Mr. Alan Skelly, 8425 Beechmont Avenue, Cincinnati, OH 45255, phone (513) 375–9242.

FERC Contact: Michael Spencer, (202) 502–6093.

Deadline for filing comments, motions to intervene, competing applications (without notices of intent), or notices of intent to file competing applications: 60 days from the issuance of this notice. Comments, motions to intervene, notices of intent, and competing applications may be filed electronically via the Internet. See 18 CFR 385.2001(a)(1)(iii) and the instructions on the Commission's Web site under the ''e-Filing'' link. If unable to be filed electronically, documents may be paper-filed. To paper-file, an original and eight copies should be mailed to: Kimberly D. Bose, Secretary, Federal Energy Regulatory Commission, 888 First Street, NE., Washington, DC 20426. For more information on how to submit these types of filings please go to the Commission's Web site located at *http://www.ferc.gov/filing-comments.asp.* More information about this project can be viewed or printed on the ''eLibrary'' link of Commission's Web site at *http://www.ferc.gov/docs-filing/elibrary.asp.* Enter the docket number (P–13406) in the docket number field to access the document. For assistance, call toll-free 1–866–208–3372.

Nathaniel J. Davis, Sr.,

Deputy Secretary.

[FR Doc. E9–19605 Filed 8–14–09; 8:45 am]

BILLING CODE P

DEPARTMENT OF ENERGY

Federal Energy Regulatory Commission

[Project No. 13405–000]

Clean River Power MR–1, LLC; Notice of Preliminary Permit Application Accepted for Filing and Soliciting Comments, Motions To Intervene, and Competing Applications

August 6, 2009.

On March 25, 2009, Clean River Power MR–1, LLC filed an application, pursuant to section 4(f) of the Federal Power Act, proposing to study the feasibility of the Devola Lock and Dam Water Power Project, to be located at the State of Ohio's Devola lock and dam on the Muskingum River in Washington County, Ohio.

The proposed Devola Lock and Dam Project would consist of: (1) The existing 17.5-foot-high, 587-foot-long concrete dam; (2) the existing 301-acre reservoir with a 3,024 acre-foot storage capacity; (3) a new 175-foot-long, 120-foot-wide intake structure; (4) a 120-foot-long, 120-foot-wide power canal; (5) a new powerhouse containing three proposed generating units with a total installed capacity of 4.3 megawatts; (6) a new 250-foot-long tailrace; (7) a new switchyard containing a single three-phase step-up transformer; and (8) a new 4,000-foot-long, 34.5-kilovolt overhead transmission line. The project would have an estimated average annual generation of 17,300 megawatt-hours.

Applicant Contact: Mr. Alan Skelly, 8425 Beechmont Avenue, Cincinnati, OH 45255, phone (513) 375–9242.

FERC Contact: Michael Spencer, (202) 502–6093.

Deadline for filing comments, motions to intervene, competing applications (without notices of intent), or notices of intent to file competing applications: 60 days from the issuance of this notice. Comments, motions to intervene, notices of intent, and competing applications may be filed electronically via the Internet. See 18 CFR 385.2001(a)(1)(iii) and the instructions on the Commission's Web site under the ''e-Filing'' link. If unable to be filed electronically, documents may be paper-filed. To paper-file, an original and eight copies should be mailed to: Kimberly D. Bose, Secretary, Federal Energy Regulatory Commission, 888 First Street, NE., Washington, DC 20426. For more information on how to submit these types of filings please go to the Commission's Web site located at *http://www.ferc.gov/filing-comments.asp.* More information about this project can be viewed or printed on

the ''eLibrary'' link of Commission's Web site at *http://www.ferc.gov/docs-filing/elibrary.asp.* Enter the docket number (P–13405) in the docket number field to access the document. For assistance, call toll-free 1–866–208–3372.

Nathaniel J. Davis, Sr.,

Deputy Secretary.

[FR Doc. E9–19604 Filed 8–14–09; 8:45 am]

BILLING CODE P

DEPARTMENT OF ENERGY

Federal Energy Regulatory Commission

[Project No. 13404–000]

Clean River Power MR–3, LLC; Notice of Preliminary Permit Application Accepted for Filing and Soliciting Comments, Motions To Intervene, and Competing Applications

August 6, 2009.

On March 25, 2009, Clean River Power MR–3, LLC filed an application, pursuant to section 4(f) of the Federal Power Act, proposing to study the feasibility of the Beverly Lock and Dam Water Power Project, to be located at the State of Ohio's Beverly lock and dam on the Muskingum River in Washington County, Ohio.

The proposed Beverly Lock and Dam Project would consist of: (1) The existing 17.0-foot-high, 535-foot-long concrete dam; (2) the existing 490-acre reservoir with a 3,345 acre-foot storage capacity; (3) a new 175-foot-long, 100-foot-wide intake structure; (4) a 120-foot-long, 100-foot-wide power canal; (5) a new powerhouse containing four proposed generating units with a total installed capacity of 4.8 megawatts; (6) a new 250-foot-long tailrace; (7) a new switchyard containing a single three-phase step-up transformer; and (8) a new 1,000-foot-long, 34.5-kilovolt overhead transmission line. The project would have an estimated average annual generation of 19,300 megawatt-hours.

Applicant Contact: Mr. Alan Skelly, 8425 Beechmont Avenue, Cincinnati, OH 45255, phone (513) 375–9242.

FERC Contact: Michael Spencer, (202) 502–6093.

Deadline for filing comments, motions to intervene, competing applications (without notices of intent), or notices of intent to file competing applications: 60 days from the issuance of this notice. Comments, motions to intervene, notices of intent, and competing applications may be filed electronically via the Internet. See 18 CFR 385.2001(a)(1)(iii) and the instructions on the Commission's Web site under the ''e-Filing'' link. If unable to be filed electronically, documents may be paper-filed. To paper-file, an original and eight copies should be mailed to: Kimberly D. Bose, Secretary, Federal Energy Regulatory Commission, 888 First Street, NE., Washington, DC 20426. For more information on how to submit these types of filings please go to the Commission's Web site located at *http://www.ferc.gov/filing-comments.asp.* More information about this project can be viewed or printed on the ''eLibrary'' link of Commission's Web site at *http://www.ferc.gov/docs-filing/elibrary.asp.* Enter the docket number (P–13404) in the docket number field to access the document. For assistance, call toll-free 1–866–208–3372.

Nathaniel J. Davis, Sr.,

Deputy Secretary.

[FR Doc. E9–19603 Filed 8–14–09; 8:45 am]

BILLING CODE P

DEPARTMENT OF ENERGY

Federal Energy Regulatory Commission

[Project No. 13412–000]

Clean River Power MR–8, LLC; Notice of Preliminary Permit Application Accepted for Filing and Soliciting Comments, Motions To Intervene, and Competing Applications

August 6, 2009.

On March 25, 2009, Clean River Power MR–8, LLC filed an application, pursuant to section 4(f) of the Federal Power Act, proposing to study the feasibility of the Zanesville Lock and Dam Water Power Project, to be located at the State of Ohio's Zanesville lock and dam on the Muskingum River in Muskingum County, Ohio.

The proposed Zanesville Lock and Dam Project would consist of: (1) The existing 12-foot-high, 514-foot-long concrete dam; (2) the existing 470-acre reservoir with a 3,410 acre-foot storage capacity; (3) a new 150-foot-long, 75-foot-wide intake structure; (4) a 150-foot-long, 75-foot-wide power canal; (5) a new powerhouse containing three proposed generating units with a total installed capacity of 4.0 megawatts; (6) a new 500-foot-long tailrace; (7) a new switchyard containing a single three-phase step-up transformer; and (8) a new 100-foot-long, 34.5-kilovolt overhead transmission line. The project would have an estimated average annual generation of 15,900 megawatt-hours.

Applicant Contact: Mr. Alan Skelly, 8425 Beechmont Avenue, Cincinnati, OH 45255, phone (513) 375–9242.

FERC Contact: Michael Spencer, (202) 502–6093.

Deadline for filing comments, motions to intervene, competing applications (without notices of intent), or notices of intent to file competing applications: 60 days from the issuance of this notice. Comments, motions to intervene, notices of intent, and competing applications may be filed electronically via the Internet. See 18 CFR 385.2001(a)(1)(iii) and the instructions on the Commission's Web site under the ''e-Filing'' link. If unable to be filed electronically, documents may be paper-filed. To paper-file, an original and eight copies should be mailed to: Kimberly D. Bose, Secretary, Federal Energy Regulatory Commission, 888 First Street, NE., Washington, DC 20426. For more information on how to submit these types of filings please go to the Commission's Web site located at *http://www.ferc.gov/filing-comments.asp.* More information about this project can be viewed or printed on the ''eLibrary'' link of Commission's Web site at *http://www.ferc.gov/docs-filing/elibrary.asp.* Enter the docket number (P–13412) in the docket number field to access the document. For assistance, call toll-free 1–866–208–3372.

Nathaniel J. Davis, Sr.,

Deputy Secretary.

[FR Doc. E9–19602 Filed 8–14–09; 8:45 am]

BILLING CODE P

DEPARTMENT OF ENERGY

Federal Energy Regulatory Commission

[Project No. 13499–000]

Lock + TM Hydro Friends Fund X, LLC; Notice of Preliminary Permit Application Accepted for Filing and Soliciting Comments, Motions To Intervene, and Competing Applications

August 7, 2009.

On June 2, 2009, Lock + TM Hydro Friends Fund X, LLC, filed an application, pursuant to section 4(f) of the Federal Power Act, proposing to study the feasibility of the Green Thunder Hydroelectric Project, to be located on the Ohio River, in Ballard County, Kentucky and Pulaski County, Illinois.

The proposed Green Thunder Project would be located at the U.S. Army Corps of Engineers (Corps) Olmstead Lock and Dam, which is presently under construction on the Ohio River, near

Olmstead, Illinois. The newly constructed Olmstead Lock and Dam will extend in a south easterly direction across the Ohio River from Illinois to Kentucky.

Once the Corps dam is completed, the proposed Green Thunder Project would include facilities upstream and downstream of the dam and on the Illinois and Kentucky sides of the river. The proposed project would consist of: (1) Two new underwater frame modules containing nine turbines each with a total installed capacity of 36 megawatts; (2) a new pre-fabricated, concrete-lined, power canal that would transport water from above the dam to below the dam on the Kentucky side of the river and contain the two aforementioned turbine modules installed side by side; (3) a new switchyard, transformer, and control room which would be located on the Illinois side of the river; (4) a new transmission line, which would extend across the river from the turbines to an existing transformer tie-in located about 1,000 feet from the Corps' lock and dam facilities; and (5) appurtenant facilities. The Green Thunder Project would have an estimated average annual generation of 284,018 megawatts-hours, which would be sold to a local utility.

Applicant Contact: Mr. Wayne F. Krouse, Managing Partner, Lock+ Hydro Friends Fund X, 5090 Richmond Avenue #390, Houston, TX 77056, 877–556–6566 x709.

FERC Contact: John Ramer, (202) 502–8969.

Deadline for filing comments, motions to intervene, competing applications (without notices of intent), or notices of intent to file competing applications: 60 days from the issuance of this notice. Comments, motions to intervene, notices of intent, and competing applications may be filed electronically via the Internet. See 18 CFR 385.2001(a)(1)(iii) and the instructions on the Commission's Web site under the ''e-Filing'' link. If unable to be filed electronically, documents may be paper-filed. To paper-file, an original and eight copies should be mailed to: Kimberly D. Bose, Secretary, Federal Energy Regulatory Commission, 888 First Street, NE., Washington, DC 20426. For more information on how to submit these types of filings please go to the Commission's Web site located at *http://www.ferc.gov/filing-comments.asp.* More information about this project can be viewed or printed on the ''eLibrary'' link of Commission's Web site at *http://www.ferc.gov/docs-filing/elibrary.asp.* Enter the docket number (P–13499) in the docket number field to access the document. For assistance, call toll-free 1–866–208–3372.

Nathaniel J. Davis, Sr.,

Deputy Secretary.

[FR Doc. E9–19618 Filed 8–14–09; 8:45 am]

BILLING CODE 6717–01–P

DEPARTMENT OF ENERGY

Federal Energy Regulatory Commission

[Project No. 13454–000]

McGinnis, Inc.; Notice of Preliminary Permit Application Accepted for Filing and Soliciting Comments, Motions To Intervene, and Competing Applications

August 7, 2009.

On April 29, 2009, McGinnis, Inc. filed an application, pursuant to section 4(f) of the Federal Power Act, proposing to study the feasibility of the Racine Hydrokinetic Project, to be located on the Ohio River, in Meigs County, Ohio and Mason County, West Virginia.

The proposed Racine Project would be located approximately 500 feet downstream of the U.S. Army Corps of Engineers Racine Lock and Dam. The proposed project would consist of: (1) Ten turbine generators, with a total installed capacity of 350 kilowatts, mounted to a single barge attached to the riverbed; (2) an armored submarine cable to transmit power generated to a metering station and transformer on shore at the southeast end of the Racine Dam; (3) a new approximately 450-foot-long, 13.2 kilovolt transmission line, which would extend from an existing substation to interconnect with the grid at the existing hydropower facility at the Racine Dam; and (4) appurtenant facilities. The Racine Project would have an estimated average annual generation of 1533 megawatts-hours, which would be distributed to the power grid or sold directly to industrial, commercial, or municipal users.

Applicant Contact: Mr. Bruce McGinnis, Sr., McGinnis, Inc., P.O. Box 534, 502 Second St. Ext., South Point, Ohio 45680, (740) 377–4391, *bmcginnis@mcginnisinc.com.*

FERC Contact: John Ramer, (202) 502–8969.

Deadline for filing comments, motions to intervene, competing applications (without notices of intent), or notices of intent to file competing applications: 60 days from the issuance of this notice. Comments, motions to intervene, notices of intent, and competing applications may be filed electronically via the Internet. See 18 CFR 385.2001(a)(1)(iii) and the instructions on the Commission's Web site under the ''e-Filing'' link. If unable to be filed electronically, documents may be paper-filed. To paper-file, an original and eight copies should be mailed to: Kimberly D. Bose, Secretary, Federal Energy Regulatory Commission, 888 First Street, NE., Washington, DC 20426. For more information on how to submit these types of filings please go to the Commission's Web site located at *http://www.ferc.gov/filing-comments.asp.* More information about this project can be viewed or printed on the ''eLibrary'' link of Commission's Web site at *http://www.ferc.gov/docs-filing/elibrary.asp.* Enter the docket number (P–13454) in the docket number field to access the document. For assistance, call toll-free 1–866–208–3372.

Nathaniel J. Davis, Sr.,

Deputy Secretary.

[FR Doc. E9–19617 Filed 8–14–09; 8:45 am]

BILLING CODE 6717–01–P

DEPARTMENT OF ENERGY

Federal Energy Regulatory Commission

[Project No. 13514–000]

Lock + TM Hydro Friends Fund XIII, LLC; Notice of Preliminary Permit Application Accepted for Filing and Soliciting Comments, Motions To Intervene, and Competing Applications

August 7, 2009.

On June 12, 2009, Lock + TM Hydro Friends Fund XI, LLC, filed an application, pursuant to section 4(f) of the Federal Power Act, proposing to study the feasibility of the Kaplan Hydroelectric Project, to be located on the Illinois River, in Cass and Brown Counties, Illinois.

The proposed Kaplan Project would be located at the U.S. Army Corps of Engineers Illinois River La Grange Lock and Dam, in La Grange, Illinois.

The proposed project would consist of: (1) Two new underwater frame modules containing nine turbines each with a total installed capacity of 9.4 megawatts; (2) a new pre-fabricated, concrete-lined conduit that would transport water from above the dam to below the dam and would contain the two aforementioned turbine modules installed side by side; (3) a new switchyard, transformer, and control room which would be located below the dam; (4) a new transmission line, which would extend 2.5 miles to an existing tie-in with the grid; and (5) appurtenant facilities. The Kaplan Project would have an estimated average annual

generation of 74,555 megawatts-hours, which would be sold to a local utility.

Applicant Contact: Mr. Wayne F. Krouse, Managing Partner, Lock + Hydro Friends Fund X, 5090 Richmond Avenue #390, Houston, TX 77056, 877–556–6566 x709.

FERC Contact: John Ramer, (202) 502–8969.

Deadline for filing comments, motions to intervene, competing applications (without notices of intent), or notices of intent to file competing applications: 60 days from the issuance of this notice. Comments, motions to intervene, notices of intent, and competing applications may be filed electronically via the Internet. See 18 CFR 385.2001(a)(1)(iii) and the instructions on the Commission's Web site under the ''e-Filing'' link. If unable to be filed electronically, documents may be paper-filed. To paper-file, an original and eight copies should be mailed to: Kimberly D. Bose, Secretary, Federal Energy Regulatory Commission, 888 First Street, NE., Washington, DC 20426. For more information on how to submit these types of filings please go to the Commission's Web site located at *http://www.ferc.gov/filing-comments.asp.* More information about this project can be viewed or printed on the ''eLibrary'' link of Commission's Web site at *http://www.ferc.gov/docs-filing/elibrary.asp.* Enter the docket number (P–13514) in the docket number field to access the document. For assistance, call toll-free 1–866–208–3372.

Nathaniel J. Davis, Sr.,

Deputy Secretary.

[FR Doc. E9–19616 Filed 8–14–09; 8:45 am]

BILLING CODE 6717–01–P

DEPARTMENT OF ENERGY

Federal Energy Regulatory Commission

[Project No. 13444–000]

McGinnis, Inc.; Notice of Preliminary Permit Application Accepted for Filing and Soliciting Comments, Motions To Intervene, and Competing Applications

August 7, 2009.

On April 29, 2009, McGinnis, Inc. filed an application, pursuant to section 4(f) of the Federal Power Act, proposing to study the feasibility of the Willow Island Hydrokinetic Project, to be located on the Ohio River, in Washington County, Ohio and Pleasants County, West Virginia.

The proposed Willow Island Project would be located approximately 500 to 2,200 feet downstream of the U.S. Army Corps of Engineers Willow Island Lock and Dam. The proposed project would consist of: (1) Ten turbine generators, with a total installed capacity of 350 kilowatts, mounted to a single barge attached to the riverbed; (2) an armored submarine cable to transmit power generated to a metering station and transformer on shore at the southeast side of the Willow Island Dam; (3) a new approximately 500-foot-long, or alternatively a new 1.26-mile-long, 13.2 kilovolt transmission line, which would extend from an existing substation to interconnect with the grid at the existing hydropower facility at the Willow Island Dam; and (4) appurtenant facilities. The Willow Island Project would have an estimated average annual generation of 1533 megawatts-hours, which would be distributed to the power grid or sold directly to industrial, commercial, or municipal users.

Applicant Contact: Mr. Bruce McGinnis, Sr., McGinnis, Inc., P.O. Box 534, 502 Second St. Ext., South Point, Ohio 45680, (740) 377–4391, *bmcginnis@mcginnisinc.com.*

FERC Contact: John Ramer, (202) 502–8969.

Deadline for filing comments, motions to intervene, competing applications (without notices of intent), or notices of intent to file competing applications: 60 days from the issuance of this notice. Comments, motions to intervene, notices of intent, and competing applications may be filed electronically via the Internet. See 18 CFR 385.2001(a)(1)(iii) and the instructions on the Commission's Web site under the ''e-Filing'' link. If unable to be filed electronically, documents may be paper-filed. To paper-file, an original and eight copies should be mailed to: Kimberly D. Bose, Secretary, Federal Energy Regulatory Commission, 888 First Street, NE., Washington, DC 20426. For more information on how to submit these types of filings please go to the Commission's Web site located at *http://www.ferc.gov/filing-comments.asp.* More information about this project can be viewed or printed on the ''eLibrary'' link of Commission's Web site at *http://www.ferc.gov/docs-filing/elibrary.asp.* Enter the docket number (P–13444) in the docket number field to access the document. For assistance, call toll-free 1–866–208–3372.

Nathaniel J. Davis, Sr.,

Deputy Secretary.

[FR Doc. E9–19615 Filed 8–14–09; 8:45 am]

BILLING CODE 6717–01–P

DEPARTMENT OF ENERGY

Federal Energy Regulatory Commission

[Project No. 12680–003]

Ocean Renewable Power Company, LLC; Notice of Intent To File Hydrokinetic Pilot Project License Application, Filing of Draft Application, Request for Waivers of Integrated Licensing Process Regulations Necessary for Expedited Processing of a Pilot Project License Application, and Soliciting Comments

August 7, 2009.

a. *Type of Filing:* Notice of Intent to File an Application for an Original License for a Hydrokinetic Pilot Project.

b. *Project No.:* 12680–003.

c. *Dated Filed:* July 24, 2009.

d. *Submitted By:* Ocean Renewable Power Company, LLC.

e. *Name of Project:* ORPC Eastport Tidal Energy Project.

f. *Location:* In Western Passage and Cobscook Bay in Eastport, Maine. The project would not occupy federal lands.

g. *Filed Pursuant to:* 18 CFR 5.3 of the Commission's regulations.

h. *Applicant Contact:* Christopher R. Sauer, Ocean Renewable Power Company, 2 Portland Fish Pier, Suite 307, Portland, Maine 04101, (207) 772–7707.

i. *FERC Contact:* Timothy Konnert (202) 502–6359.

j. Ocean Renewable Power Company (ORPC) has filed with the Commission: (1) A notice of intent (NOI) to file an application for an original license for a kinetic hydropower pilot project and a draft license application with monitoring plans; (2) a request for waivers of the integrated licensing process regulations necessary for expedited processing of a hydrokinetic pilot project license application; (3) a proposed process plan and schedule; (4) a request to be designated as the non-federal representative for section 7 of the Endangered Species Act (ESA) consultation; and (5) a request to be designated as the non-federal representative for section 106 consultation under the National Historic Preservation Act (NHPA) (collectively the pre-filing materials).

k. With this notice, we are soliciting comments on the pre-filing materials listed in paragraph j above, including the draft pilot license application and monitoring plans. All comments should be sent to the address above in paragraph h. In addition, all comments (original and eight copies) must be filed with the Commission at the following address: Kimberly D. Bose, Secretary,

Federal Energy Regulatory Commission, 888 First Street, NE., Washington, DC 20426. All filings with the Commission must include on the first page, the project name (ORPC Eastport Tidal Energy Project) and number (P–12680–003), and bear the heading ''Comments on the proposed ORPC Eastport Tidal Energy Project.'' Any individual or entity interested in submitting comments on the pre-filing materials must do so by September 8, 2009.

Comments may be filed electronically via the Internet in lieu of paper. The Commission strongly encourages electronic filings. See 18 CFR 385.2001(a)(1)(iii) and the instructions on the Commission's Web site (*http://www.ferc.gov*) under the ''e-filing'' link.

l. With this notice, we are approving ORPC's request to be designated as the non-federal representative for section 7 of the Endangered Species Act (ESA) and its request to initiate consultation under section 106 of the National Historic Preservation Act; and recommending that it begin informal consultation with: (a) The U.S. Fish and Wildlife Service and the National Marine Fisheries Service as required by section 7 of ESA; and (b) the New York State Historic Preservation Officer, as required by section 106, NHPA, and the implementing regulations of the Advisory Council on Historic Preservation at 36 CFR 800.2.

m. This notice does not constitute the Commission's approval of ORPC's request to use the Pilot Project Licensing Procedures. Upon its review of the project's overall characteristics relative to the pilot project criteria, the draft license application contents, and any comments filed, the Commission will determine whether there is adequate information to conclude the pre-filing process.

n. The proposed ORPC Eastport Tidal Energy Project would consist of: (1) A single 1-megawatt (MW) hydrokinetic device in Cobscook Bay during Phase 1; (2) four additional 1–MW hydrokinetic devices in Western Passage during Phase 2; (3) underwater bundled cables from each device that would interconnect with a control room and station located on shore, one at Western Passage and one at Cobscook Bay; (4) a transmission line connecting the shore stations to the Eastport electrical grid; and (5) appurtenant facilities for operating and maintaining the project. The estimated annual generation of the proposed project during Phase 1 is 2,760 megawatt-hours (MWh) and 15,000 MWh during Phase 2.

o. A copy of the draft license application and all pre-filing materials are available for review at the Commission in the Public Reference Room or may be viewed on the Commission's Web site (*http://www.ferc.gov*), using the ''eLibrary'' link. Enter the docket number, excluding the last three digits in the docket number field to access the document. For assistance, contact FERC Online Support at *FERCONlineSupport@ferc.gov* or toll free at 1–866–208–3676, of for TTY, (202) 502–8659. A copy is also available for inspection and reproduction at the address in paragraph h.

p. Pre-filing process schedule. The pre-filing process will be conducted pursuant to the following tentative schedule. Revisions to the schedule may be made as appropriate.

Milestone	Date
Comments on pre-filing materials due.	September 8, 2009.
Issuance of meeting notice (if needed).	September 23, 2009.
Public meeting/technical conference (if needed).	October 23, 2009.
Issuance of notice concluding pre-filing process and ILP waiver request determination.	October 8, 2009 (if no meeting is needed) November 9, 2009 (if meeting is needed).

q. Register online at *http://ferc.gov/esubscribenow.htm* to be notified via e-mail of new filing and issuances related to this or other pending projects. For assistance, contact FERC Online Support.

Nathaniel J. Davis, Sr.,

Deputy Secretary.

[FR Doc. E9–19614 Filed 8–14–09; 8:45 am]

BILLING CODE 6717–01–P

DEPARTMENT OF ENERGY

Federal Energy Regulatory Commission

[Project No. 516–459]

South Carolina Electric & Gas Company; Notice of Settlement Agreement and Soliciting Comments

August 7, 2009.

Take notice that the following Settlement Agreement (Settlement) has been filed with the Commission and is available for public inspection.

a. *Type of Application:* Settlement Agreement.

b. *Project No.:* P–516–459.

c. *Date filed:* July 31, 2009.

d. *Applicant:* South Carolina Electric & Gas Company (SC Electric & Gas).

e. *Name of Project:* Saluda Hydroelectric Project.

f. *Location:* On the Saluda River in Richland, Lexington, Saluda, and Newberry counties, South Carolina. The project does not occupy any federal lands.

g. *Filed Pursuant to:* Rule 602 of the Commission's Rules of Practice and Procedure, 18 CFR 385.602.

h. *Applicant Contact:* Mr. James M. Landreth, Vice President, Fossil/Hydro Operations South Carolina Electric & Gas Company, 111 Research Drive, Columbia, South Carolina 29203; or Mr. William R. Argentieri, Manager-Civil Engineering, South Carolina Electric & Gas Company, 111 Research Drive, Columbia, South Carolina 29203, (803) 217–9162.

i. *FERC Contact:* Lee Emery at (202) 502–8379, or e-mail at *lee.emery@ferc.gov.*

j. *Deadline for Filing Comments:* The deadline for filing comments on the Settlement Agreement is 53 days from the date of this notice (September 29, 2009). The deadline for filing reply comments is 98 days from the date of this notice (November 13, 2009). All documents (original and eight copies) should be filed with: Kimberly D. Bose, Secretary, Federal Energy Regulatory Commission, 888 First Street, NE., Washington, DC 20426.

The Commission's Rules of Practice require all participants filing documents with the Commission to serve a copy of that document on each person on the official service list for the project. Further, if a participant files comments or documents with the Commission relating to the merits of an issue that may affect the responsibilities of a particular resource agency, they must also serve a copy of the document on that resource agency.

Comments may be filed electronically via the Internet in lieu of paper. The Commission strongly encourages electronic filings. *See* 18 CFR 385.2001(a)(1)(iii) and the instructions of the Commission's Web site (*http://www.ferc.gov*) under the ''e-filing'' link. For a simpler method of submitting text only comments, click on ''Quick Comment.''

k. SC Electric & Gas filed a comprehensive settlement agreement (Agreement) on behalf of itself, American Rivers, American Whitewater, Capitol City Lake Murray Country, Catawba Indian Nation, City of Columbia Fire and Rescue, City of Columbia Parks and Recreation, Coastal Conservation League, Lake Murray Association, Lake Murray Docks, Lake Murray Homeowners Coalition, Lake Murray Power Squadron, Lake Watch, Lake Murray Chamber of Commerce, Midlands Striper Club, Riverbanks Zoo

and Garden, South Carolina Department of Natural Resources, the South Carolina Wildlife Federation, and the South Carolina Department of Archives and History. The purpose of the Agreement is to resolve, as well as to provide procedures for resolving, among the signatories, issues associated with issuance of a new license for the project, including Lake Murray lake levels and downstream minimum flows in the lower Saluda River. Major issues covered in the settlement include: (1) Public safety measures associated with the release of flows to the Saluda River downstream from the Saluda dam; (2) six measures to protect of aquatic resources, including trout and sturgeon, in the lower Saluda river; (3) minimum and recreation flow releases from the Saluda dam to the lower Saluda River; (4) a low-flow operating protocol, except for the lake level that would trigger implementation of the protocol; (5) upgrading unit runners to improve water quality in the downstream reaches; (6) leasing lands for waterfowl habitat; and (7) recreational improvements at existing sites around Lake Murray and along the lower Saluda River, as well as set-aside lands for future recreation sites.

SC Electric & Gas requests that the Commission: (1) Incorporate the obligations and agreements, as illustrated in Appendix A of the Agreement, without material modification into the terms and conditions of the new license; and (2) issue a new license for a term of 50 years.

l. A copy of the Settlement Agreement is available for review at the Commission in the Public Reference Room or may be viewed on the Commission's Web site at *http://www.ferc.gov,* using the ''e-Library'' link. Enter the docket number, excluding the last three digits in the docket number field to access the document. For assistance, contact FERC Online Support at *FERCOnlineSupport@ferc.gov* or toll-free at 1–866–208–3676, or for TTY, (202) 502–8659. A copy is also available for inspection and reproduction at the address in item h above.

You may register online at *http://www.ferc.gov/esubscribenow.htm* to be notified via e-mail of new filings and issuances related to this or other pending projects. For assistance, contact FERC Online Support.

Nathaniel J. Davis, Sr.,

Deputy Secretary.

[FR Doc. E9–19612 Filed 8–14–09; 8:45 am]

BILLING CODE 6717–01–P

DEPARTMENT OF ENERGY

Federal Energy Regulatory Commission

[Project No. 13403–000]

Clean River Power MR–4, LLC; Notice of Preliminary Permit Application Accepted for Filing and Soliciting Comments, Motions To Intervene, and Competing Applications

August 6, 2009.

On March 25, 2009, Clean River Power MR–4, LLC filed an application, pursuant to section 4(f) of the Federal Power Act, proposing to study the feasibility of the Luke's Chute Lock and Dam Water Power Project, to be located at the State of Ohio's Luke's Chute Lock and Dam on the Muskingum River in Washington County, Ohio.

The proposed Luke's Chute Lock and Dam Project would consist of: (1) The existing 19.7-foot-high, 546-foot-long concrete dam; (2) the existing 490-acre reservoir with a 3,345 acre-foot storage capacity; (3) a new 150-foot-long, 120-foot-wide intake structure; (4) a 200-foot-long, 120-foot-wide power canal; (5) a new powerhouse containing three proposed generating units with a total installed capacity of 3.9 megawatts; (6) a new 150-foot-long tailrace; (7) a new switchyard containing a single three-phase step-up transformer; and (8) a new 1,500-foot-long, 34.5-kilovolt overhead transmission line. The project would have an estimated average annual generation of 15,600 megawatt-hours.

Applicant Contact: Mr. Alan Skelly, 8425 Beechmont Avenue, Cincinnati, OH 45255, phone (513) 375–9242.

FERC Contact: Michael Spencer, (202) 502–6093.

Deadline for filing comments, motions to intervene, competing applications (without notices of intent), or notices of intent to file competing applications: 60 days from the issuance of this notice. Comments, motions to intervene, notices of intent, and competing applications may be filed electronically via the Internet. See 18 CFR 385.2001(a)(1)(iii) and the instructions on the Commission's Web site under the ''e-Filing'' link. If unable to be filed electronically, documents may be paper-filed. To paper-file, an original and eight copies should be mailed to: Kimberly D. Bose, Secretary, Federal Energy Regulatory Commission, 888 First Street, NE., Washington, DC 20426. For more information on how to submit these types of filings please go to the Commission's Web site located at *http://www.ferc.gov/filing-comments.asp.* More information about this project can be viewed or printed on the ''eLibrary'' link of Commission's Web site at *http://www.ferc.gov/docs-filing/elibrary.asp.* Enter the docket number (P–13403) in the docket number field to access the document. For assistance, call toll-free 1–866–208–3372.

Nathaniel J. Davis, Sr.,

Deputy Secretary.

[FR Doc. E9–19611 Filed 8–14–09; 8:45 am]

BILLING CODE P

DEPARTMENT OF ENERGY

Federal Energy Regulatory Commission

[Project No. 13411–000]

Clean River Power MR–6, LLC; Notice of Preliminary Permit Application Accepted for Filing and Soliciting Comments, Motions To Intervene, and Competing Applications

August 6, 2009.

On March 25, 2009, Clean River Power MR–6, LLC filed an application, pursuant to section 4(f) of the Federal Power Act, proposing to study the feasibility of the Rokeby Lock and Dam Water Power Project, to be located at the State of Ohio's Rokeby lock and dam on the Muskingum River in Morgan County, Ohio.

The proposed Rokeby Lock and Dam Project would consist of: (1) The existing 20-foot-high, 525-foot-long concrete dam; (2) the existing 615-acre reservoir with a 4,576 acre-foot storage capacity; (3) a new 150-foot-long, 140-foot-wide intake structure; (4) a 150-foot-long, 140-foot-wide power canal; (5) a new powerhouse containing six proposed generating units with a total installed capacity of 2.8 megawatts; (6) a new 100-foot-long tailrace; (7) a new switchyard containing a single three-phase step-up transformer; and (8) a new 1,200-foot-long, 34.5-kilovolt overhead transmission line. The project would have an estimated average annual generation of 11,400 megawatt-hours.

Applicant Contact: Mr. Alan Skelly, 8425 Beechmont Avenue, Cincinnati, OH 45255, phone (513) 375–9242.

FERC Contact: Michael Spencer, (202) 502–6093.

Deadline for filing comments, motions to intervene, competing applications (without notices of intent), or notices of intent to file competing applications: 60 days from the issuance of this notice. Comments, motions to intervene, notices of intent, and competing applications may be filed electronically via the Internet. See 18 CFR 385.2001(a)(1)(iii) and the instructions on the Commission's Web site under the

''e-Filing'' link. If unable to be filed electronically, documents may be paper-filed. To paper-file, an original and eight copies should be mailed to: Kimberly D. Bose, Secretary, Federal Energy Regulatory Commission, 888 First Street, NE., Washington, DC 20426. For more information on how to submit these types of filings please go to the Commission's Web site located at *http://www.ferc.gov/filing-comments.asp.* More information about this project can be viewed or printed on the ''eLibrary'' link of Commission's Web site at *http://www.ferc.gov/docs-filing/elibrary.asp.* Enter the docket number (P–13411) in the docket number field to access the document. For assistance, call toll-free 1–866–208–3372.

Nathaniel J. Davis, Sr.,

Deputy Secretary.

[FR Doc. E9–19610 Filed 8–14–09; 8:45 am]

BILLING CODE P

DEPARTMENT OF ENERGY

Federal Energy Regulatory Commission

[Project No. 13453–000]

McGinnis, Inc.; Notice of Preliminary Permit Application Accepted for Filing and Soliciting Comments, Motions To Intervene, and Competing Applications

August 7, 2009.

On April 29, 2009, McGinnis, Inc. filed an application, pursuant to section 4(f) of the Federal Power Act, proposing to study the feasibility of the Belleville Hydrokinetic Project, to be located on the Ohio River, in Meigs County, Ohio and Wood County, West Virginia.

The proposed Belleville Project would be located approximately 500 feet downstream of the U.S. Army Corps of Engineers Belleville Lock and Dam. The proposed project would consist of: (1) Ten turbine generators, with a total installed capacity of 350 kilowatts, mounted to a single barge attached to the riverbed; (2) an armored submarine cable to transmit power generated to a metering station and transformer on shore at the east side of the Belleville Dam; (3) a new approximately 1,250-foot-long, 13.2 kilovolt transmission line, which would extend from an existing substation to interconnect with the grid at the existing hydropower facility at the Belleville Dam; and (4) appurtenant facilities. The Belleville Project would have an estimated average annual generation of 1533 megawatts-hours, which would be distributed to the power grid or sold directly to industrial, commercial, or municipal users.

Applicant Contact: Mr. Bruce McGinnis, Sr., McGinnis, Inc., P.O. Box 534, 502 Second St. Ext., South Point, Ohio 45680, (740) 377–4391, *bmcginnis@mcginnisinc.com.*

FERC Contact: John Ramer, (202) 502–8969.

Deadline for filing comments, motions to intervene, competing applications (without notices of intent), or notices of intent to file competing applications: 60 days from the issuance of this notice. Comments, motions to intervene, notices of intent, and competing applications may be filed electronically via the Internet. See 18 CFR 385.2001(a)(1)(iii) and the instructions on the Commission's Web site under the ''e-Filing'' link. If unable to be filed electronically, documents may be paper-filed. To paper-file, an original and eight copies should be mailed to: Kimberly D. Bose, Secretary, Federal Energy Regulatory Commission, 888 First Street, NE., Washington, DC 20426. For more information on how to submit these types of filings please go to the Commission's Web site located at *http://www.ferc.gov/filing-comments.asp.* More information about this project can be viewed or printed on the ''eLibrary'' link of Commission's Web site at *http://www.ferc.gov/docs-filing/elibrary.asp.* Enter the docket number (P–13453) in the docket number field to access the document. For assistance, call toll-free 1–866–208–3372.

Nathaniel J. Davis, Sr.,

Deputy Secretary.

[FR Doc. E9–19621 Filed 8–14–09; 8:45 am]

BILLING CODE 6717–01–P

DEPARTMENT OF ENERGY

Federal Energy Regulatory Commission

[Project No. 13502–000]

Lock + TM Hydro Friends Fund XII, LLC; Notice of Preliminary Permit Application Accepted for Filing and Soliciting Comments, Motions To Intervene, and Competing Applications

August 7, 2009.

On June 5, 2009, Lock + TM Hydro Friends Fund XII, LLC, filed an application, pursuant to section 4(f) of the Federal Power Act, proposing to study the feasibility of the Super Panda Hydroelectric Project, to be located on the Monongahela River, in Allegheny County, Pennsylvania.

The proposed Super Panda Project would be located at the U.S. Army Corps of Engineers Monongahela River Lock and Dam No. 3, in Elizabeth, Pennsylvania.

The proposed project would consist of: (1) A new approximately 110-foot-wide steel lock frame module containing nine turbines with a total installed capacity of 4.96 megawatts which would be installed in the northwest portion of the existing dam; (2) a new concrete-lined conduit which would direct flow to the turbine module; (3) a new switchyard, transformer, and control room which would be located in the northwest portion of the dam; (4) a new 69 kilovolt, approximately 1,000-foot-long transmission line, which would tie-in to the local electric grid; and (5) appurtenant facilities. The Super Panda Project would have an estimated average annual generation of 41,330 megawatts-hours, which would be sold to a local utility.

Applicant Contact: Mr. Wayne F. Krouse, Managing Partner, Lock + Hydro Friends Fund X, 5090 Richmond Avenue #390, Houston, TX 77056, 877–556–6566 x709.

FERC Contact: John Ramer, (202) 502–8969.

Deadline for filing comments, motions to intervene, competing applications (without notices of intent), or notices of intent to file competing applications: 60 days from the issuance of this notice. Comments, motions to intervene, notices of intent, and competing applications may be filed electronically via the Internet. See 18 CFR 385.2001(a)(1)(iii) and the instructions on the Commission's Web site under the ''e-Filing'' link. If unable to be filed electronically, documents may be paper-filed. To paper-file, an original and eight copies should be mailed to: Kimberly D. Bose, Secretary, Federal Energy Regulatory Commission, 888 First Street, NE., Washington, DC 20426. For more information on how to submit these types of filings please go to the Commission's Web site located at *http://www.ferc.gov/filing-comments.asp.* More information about this project can be viewed or printed on the ''eLibrary'' link of Commission's Web site at *http://www.ferc.gov/docs-filing/elibrary.asp.* Enter the docket number (P–13502) in the docket number field to access the document. For assistance, call toll-free 1–866–208–3372.

Nathaniel J. Davis, Sr.,

Deputy Secretary.

[FR Doc. E9–19620 Filed 8–14–09; 8:45 am]

BILLING CODE 6717–01–P

DEPARTMENT OF ENERGY

Federal Energy Regulatory Commission

[Project No. 13500–000]

Lock + TM Hydro Friends Fund XI, LLC; Notice of Preliminary Permit Application Accepted for Filing and Soliciting Comments, Motions To Intervene, and Competing Applications

August 7, 2009.

On June 2, 2009, Lock + TM Hydro Friends Fund XI, LLC, filed an application, pursuant to section 4(f) of the Federal Power Act, proposing to study the feasibility of the Mean Green Hydroelectric Project, to be located on the Mississippi River, in Jackson County, Iowa and Jo Daviess County, Illinois.

The proposed Mean Green Project would be located at the U.S. Army Corps of Engineers Mississippi River Lock and Dam No. 12, near Bellevue, Iowa.

The proposed project would consist of: (1) One new underwater frame module containing nine turbines with a total installed capacity of about 6.4 megawatts which would be installed in the Corps' unused auxiliary lock located adjacent to the Corps' active lock; (2) a new removable lock door; (3) a new switchyard, transformer, and control room which would be located on the Iowa side of the river; (4) a new 1000-foot-long, 36.7 kilovolt transmission line, which would deliver power from the turbines to an existing transformer tie-in bus located at the Corps' lock and dam facilities; and (5) appurtenant facilities. The Mean Green Project would have an estimated average annual generation of about 53,039 megawatts-hours, which would be sold to a local utility.

Applicant Contact: Mr. Wayne F. Krouse, Managing Partner, Lock + Hydro Friends Fund XI, 5090 Richmond Avenue #390, Houston, TX 77056, 877–556–6566 x709.

FERC Contact: John Ramer, (202) 502–8969.

Deadline for filing comments, motions to intervene, competing applications (without notices of intent), or notices of intent to file competing applications: 60 days from the issuance of this notice. Comments, motions to intervene, notices of intent, and competing applications may be filed electronically via the Internet. See 18 CFR 385.2001(a)(1)(iii) and the instructions on the Commission's Web site under the ''e-Filing'' link. If unable to be filed electronically, documents may be paper-filed. To paper-file, an original and eight copies should be mailed to: Kimberly D. Bose, Secretary, Federal Energy Regulatory Commission, 888 First Street, NE., Washington, DC 20426. For more information on how to submit these types of filings please go to the Commission's Web site located at *http://www.ferc.gov/filing-comments.asp.* More information about this project can be viewed or printed on the ''eLibrary'' link of Commission's Web site at *http://www.ferc.gov/docs-filing/elibrary.asp.* Enter the docket number (P–13500) in the docket number field to access the document. For assistance, call toll-free 1–866–208–3372.

Nathaniel J. Davis, Sr.,

Deputy Secretary.

[FR Doc. E9–19619 Filed 8–14–09; 8:45 am]

BILLING CODE 6717–01–P

DEPARTMENT OF ENERGY

Federal Energy Regulatory Commission

[Docket No. CP09–447–000]

Natural Gas Pipeline Company of America LLC; Notice of Application

August 6, 2009.

Take notice that on July 22, 2009, Natural Gas Pipeline Company of America (Natural), 3250 Lacey Road, Downers Grove, Illinois 60515–7918, filed an application in Docket No. CP09–447–000, pursuant to sections 7(b) and 7(c) of the Natural Gas Act (NGA) and Part 157 of the Commission's regulations, requesting: (1) A certificate of public convenience and necessity authorizing Natural to construct, ultimately own, and operate two 5.55-mile segments of 30-inch line and one 5.55-mile segment of 36-inch line in Panola County, Texas and (2) permission and approval to abandon by exchange and transfer to Luminant Mining Company LLC (Luminant) two 4.3-mile segments of 30-inch line and one 4.3-mile segment of 36-inch line. The proposal seeks to allow Luminant to construct rerouted replacement line segments to be exchanged for Natural's existing line segments located in an area where Luminant has mining operations (Natural Pipeline Relocation Project). The project costs are approximately $29.7 million and are to be borne by Luminant.

Any questions regarding this application should be directed to Bruce H. Newsome, Vice President, Natural Gas Pipeline Company of America LLC, 3250 Lacey Road, 7th Floor, Downers Grove, Illinois 60515–7918, telephone: (630) 725–3070, e-mail: *bruce_newsome@kindermorgan.com.*

Pursuant to section 157.9 of the Commission's rules, 18 CFR 157.9, within 90 days of this Notice the Commission staff will either complete its environmental assessment (EA) and place it into the Commission's public record (eLibrary) for this proceeding; or issue a Notice of Schedule for Environmental Review. If a Notice of Schedule for Environmental Review is issued, it will indicate, among other milestones, the anticipated date for the Commission staff's issuance of the final environmental impact statement (FEIS) or EA for this proposal. The filing of the EA in the Commission's public record for this proceeding or the issuance of a Notice of Schedule for Environmental Review will serve to notify federal and state agencies of the timing for the completion of all necessary reviews, and the subsequent need to complete all federal authorizations within 90 days of the date of issuance of the Commission staff's FEIS or EA.

There are two ways to become involved in the Commission's review of this project. First, any person wishing to obtain legal status by becoming a party to the proceedings for this project should, on or before the comment date stated below, file with the Federal Energy Regulatory Commission, 888 First Street, NE., Washington, DC 20426, a motion to intervene in accordance with the requirements of the Commission's Rules of Practice and Procedure (18 CFR 385.214 or 385.211) and the Regulations under the NGA (18 CFR 157.10). A person obtaining party status will be placed on the service list maintained by the Secretary of the Commission and will receive copies of all documents filed by the applicant and by all other parties. A party must submit 14 copies of filings made with the Commission and must mail a copy to the applicant and to every other party in the proceeding. Only parties to the proceeding can ask for court review of Commission orders in the proceeding.

However, a person does not have to intervene in order to have comments considered. The second way to participate is by filing with the Secretary of the Commission, as soon as possible, an original and two copies of comments in support of or in opposition to this project. The Commission will consider these comments in determining the appropriate action to be taken, but the filing of a comment alone will not serve to make the filer a party to the proceeding. The Commission's rules require that persons filing comments in opposition to the project provide copies of their protests only to

the party or parties directly involved in the protest.

Persons who wish to comment only on the environmental review of this project should submit an original and two copies of their comments to the Secretary of the Commission. Environmental commentors will be placed on the Commission's environmental mailing list, will receive copies of the environmental documents, and will be notified of meetings associated with the Commission's environmental review process. Environmental commentors will not be required to serve copies of filed documents on all other parties. However, the non-party commentors will not receive copies of all documents filed by other parties or issued by the Commission (except for the mailing of environmental documents issued by the Commission) and will not have the right to seek court review of the Commission's final order.

The Commission strongly encourages electronic filings of comments, protests and interventions in lieu of paper using the ''eFiling'' link at *http://www.ferc.gov.* Persons unable to file electronically should submit an original and 14 copies of the protest or intervention to the Federal Energy Regulatory Commission, 888 First Street, NE., Washington, DC 20426.

This filing is accessible on-line at *http://www.ferc.gov,* using the ''eLibrary'' link and is available for review in the Commission's Public Reference Room in Washington, DC. There is an ''eSubscription'' link on the Web site that enables subscribers to receive e-mail notification when a document is added to a subscribed docket(s). For assistance with any FERC Online service, please e-mail *FERCOnlineSupport@ferc.gov,* or call (866) 208–3676 (toll free). For TTY, call (202) 502–8659.

Comment Date: August 27, 2009.

Nathaniel J. Davis, Sr.,

Deputy Secretary.

[FR Doc. E9–19599 Filed 8–14–09; 8:45 am]

BILLING CODE P

DEPARTMENT OF ENERGY

Federal Energy Regulatory Commission

Combined Notice of Filings #1

August 10, 2009.

Take notice that the Commission received the following electric corporate filings:

Docket Numbers: EC09–86–001.
Applicants: PacifiCorp.
Description: PacifiCorp Supplement to Application Under FPA Section 203.
Filed Date: 08/04/2009.
Accession Number: 20090804–5060.
Comment Date: 5 p.m. Eastern Time on Tuesday, August 25, 2009.

Docket Numbers: EC09–97–001.
Applicants: MidAmerican Energy Company.
Description: Supplement to Application under FPA Section 203 of MidAmerican Energy Company.
Filed Date: 08/07/2009.
Accession Number: 20090807–5102.
Comment Date: 5 p.m. Eastern Time on Monday, August 17, 2009.

Docket Numbers: EC09–99–001.
Applicants: MidAmerican Energy Company.
Description: Supplement to Application under FPA Section 203 of MidAmerican Energy Company.
Filed Date: 08/07/2009.
Accession Number: 20090807–5103.
Comment Date: 5 p.m. Eastern Time on Monday, August 17, 2009.

Docket Numbers: EC09–102–000.
Applicants: AES Armenia Mountain Wind, LLC.
Description: Application for Approval of Disposition of Jurisdictional Facilities, Request for Confidential Treatment, and Request for Expedited Action of AES Armenia Mountain Wind, LLC.
Filed Date: 08/10/2009.
Accession Number: 20090810–5008.
Comment Date: 5 p.m. Eastern Time on Monday, August 31, 2009.

Take notice that the Commission received the following electric rate filings:

Docket Numbers: ER01–3103–019.
Applicants: Astoria Energy LLC.
Description: Astoria Energy LLC Submits Report—No Material Change in Status—Order 652.
Filed Date: 08/07/2009.
Accession Number: 20090807–5067.
Comment Date: 5 p.m. Eastern Time on Friday, August 28, 2009.

Docket Numbers: ER09–1316–001.
Applicants: Midwest Independent Transmission System Operator, Inc.
Description: Midwest Independent Transmission System Operator, Inc submits Original Service Agreement 2064 *et al.* to FERC Electric Tariff, Fourth Revised Volume 1.
Filed Date: 08/07/2009.
Accession Number: 20090810–0006.
Comment Date: 5 p.m. Eastern Time on Friday, August 28, 2009.

Docket Numbers: ER09–1559–000.
Applicants: Xcel Energy Operating Companies.
Description: Xcel Energy Services Inc submits proposed revisions to the Xcel Energy Operating Companies Joint Open Access Transmission Tariff.
Filed Date: 08/07/2009.
Accession Number: 20090807–0113.
Comment Date: 5 p.m. Eastern Time on Friday, August 28, 2009.

Docket Numbers: ER09–1561–000; ER09–1561–001.
Applicants: Castleton Power, LLC.
Description: Castleton Power, LLC informs the Commission that it has succeeded to the market-based rate tariff of EPCOR Power (Castleton) LLC of changes in its name of changes in its upstream ownership ect.
Filed Date: 08/07/2009.
Accession Number: 20090810–0001.
Comment Date: 5 p.m. Eastern Time on Friday, August 28, 2009.

Docket Numbers: ER09–1562–000.
Applicants: Southwest Power Pool, Inc.
Description: Southwest Power Pool, Inc submits First Revised Service Agreement 1617 *et al.* to FERC Electric Tariff, Fifth Revised Volume 1, to be effective 10/6/09.
Filed Date: 08/07/2009.
Accession Number: 20090810–0003.
Comment Date: 5 p.m. Eastern Time on Friday, August 28, 2009.

Docket Numbers: ER09–1563–000.
Applicants: American Transmission Systems, Incorporation.
Description: FirstEnergy submits executed Construction Agreement between FirstEnergy and Renewable Energy Services of Ohio, LLC *et al.*
Filed Date: 08/07/2009.
Accession Number: 20090810–0004.
Comment Date: 5 p.m. Eastern Time on Friday, August 28, 2009.

Docket Numbers: ER09–1564–000.
Applicants: Entergy Services, Inc.
Description: Entergy Services, Inc submits First Revised Sheet 114 *et al.* to FERC Electric Tariff, Third Revised Volume 3 to be effective 10/6/09.
Filed Date: 08/07/2009.
Accession Number: 20090810–0005.
Comment Date: 5 p.m. Eastern Time on Friday, August 28, 2009.

Any person desiring to intervene or to protest in any of the above proceedings must file in accordance with Rules 211 and 214 of the Commission's Rules of Practice and Procedure (18 CFR 385.211 and 385.214) on or before 5 p.m. Eastern time on the specified comment date. It is not necessary to separately intervene again in a subdocket related to a compliance filing if you have previously intervened in the same docket. Protests will be considered by the Commission in determining the appropriate action to be taken, but will not serve to make protestants parties to the proceeding. Anyone filing a motion to intervene or

protest must serve a copy of that document on the Applicant. In reference to filings initiating a new proceeding, interventions or protests submitted on or before the comment deadline need not be served on persons other than the Applicant.

The Commission encourages electronic submission of protests and interventions in lieu of paper, using the FERC Online links at *http://www.ferc.gov.* To facilitate electronic service, persons with Internet access who will eFile a document and/or be listed as a contact for an intervenor must create and validate an eRegistration account using the eRegistration link. Select the eFiling link to log on and submit the intervention or protests.

Persons unable to file electronically should submit an original and 14 copies of the intervention or protest to the Federal Energy Regulatory Commission, 888 First St., NE., Washington, DC 20426.

The filings in the above proceedings are accessible in the Commission's eLibrary system by clicking on the appropriate link in the above list. They are also available for review in the Commission's Public Reference Room in Washington, DC. There is an eSubscription link on the Web site that enables subscribers to receive e-mail notification when a document is added to a subscribed docket(s). For assistance with any FERC Online service, please e-mail *FERCOnlineSupport@ferc.gov* or call (866) 208–3676 (toll free). For TTY, call (202) 502–8659.

Nathaniel J. Davis, Sr.,

Deputy Secretary.

[FR Doc. E9–19591 Filed 8–14–09; 8:45 am]

BILLING CODE 6717–01–P

DEPARTMENT OF ENERGY

Federal Energy Regulatory Commission

Combined Notice of Filings No. 2

August 10, 2009.

Take notice that the Commission has received the following Natural Gas Pipeline Rate and Refund Report filings:

Docket Numbers: RP96–312–197.

Applicants: Tennessee Gas Pipeline Company.

Description: Tennessee Gas Pipeline Company submits notice to the Commission of the termination of a negotiated rate arrangement comprised of a gas transportation agreement.

Filed Date: 08/07/2009.

Accession Number: 20090807–0110.

Comment Date: 5 p.m. Eastern Time on Wednesday, August 19, 2009.

Docket Numbers: RP96–312–198.

Applicants: Tennessee Gas Pipeline Company.

Description: Tennessee Gas Pipeline Company submits Termination of Negotiated Rate Arrangement.

Filed Date: 08/07/2009.

Accession Number: 20090807–0098.

Comment Date: 5 p.m. Eastern Time on Wednesday, August 19, 2009.

Docket Numbers: RP07–395–001.

Applicants: NSTAR Gas Co vs. Algonquin Gas Transmission LLC.

Description: Algonquin Gas Transmission, LLC submits Third Revised Sheet No 37A *et al.* to FERC Gas Tariff, Fifth Revised Volume No 1.

Filed Date: 07/31/2009.

Accession Number: 20090803–0053.

Comment Date: 5 p.m. Eastern Time on Friday, August 14, 2009.

Any person desiring to protest this filing must file in accordance with Rule 211 of the Commission's Rules of Practice and Procedure (18 CFR 385.211). Protests to this filing will be considered by the Commission in determining the appropriate action to be taken, but will not serve to make protestants parties to the proceeding. Such protests must be filed on or before 5 p.m. Eastern time on the specified comment date. Anyone filing a protest must serve a copy of that document on all the parties to the proceeding.

The Commission encourages electronic submission of protests in lieu of paper using the ''eFiling'' link at *http://www.ferc.gov.* Persons unable to file electronically should submit an original and 14 copies of the protest to the Federal Energy Regulatory Commission, 888 First Street, NE., Washington, DC 20426.

This filing is accessible on-line at *http://www.ferc.gov*, using the ''eLibrary'' link and is available for review in the Commission's Public Reference Room in Washington, DC. There is an ''eSubscription'' link on the Web site that enables subscribers to receive e-mail notification when a document is added to a subscribed docket(s). For assistance with any FERC Online service, please e-mail *FERCOnlineSupport@ferc.gov*, or call (866) 208–3676 (toll free). For TTY, call (202) 502–8659.

Nathaniel J. Davis, Sr.,

Deputy Secretary.

[FR Doc. E9–19594 Filed 8–14–09; 8:45 am]

BILLING CODE 6717–01–P

DEPARTMENT OF ENERGY

Federal Energy Regulatory Commission

Combined Notice of Filings No. 2

August 7, 2009.

Take notice that the Commission has received the following Natural Gas Pipeline Rate and Refund Report filings:

Docket Numbers: RP09–731–001.

Applicants: Petal Gas Storage, LLC.

Description: Petal Gas Storage, LLC submits Substitute Eleventh Revised Sheet No. 129 to its FERC Gas Tariff, Original Volume No. 1.

Filed Date: 7/30/2009.

Accession Number: 20090730–0243.

Comment Date: 5 p.m. Eastern Time on Tuesday, August 11, 2009.

Docket Numbers: RP09–714–002.

Applicants: Crossroads Pipeline Company.

Description: Crossroads Pipeline Company submits Seventh Revised Sheet 380 *et al* to its FERC Gas Tariff, First Revised Volume 1 to be effective 9/4/09.

Filed Date: 8/5/2009.

Accession Number: 20090805–0029.

Comment Date: 5 p.m. Eastern Time on Monday, August 17, 2009.

Docket Numbers: RP09–723–001.

Applicants: Kern River Gas Transmission Company.

Description: Kern River Gas Transmission Company submits Substitute Third Revised Sheet 168 to its FERC Gas Tariff, Second Revised Volume 1.

Filed Date: 8/5/2009.

Accession Number: 20090805–0030.

Comment Date: 5 p.m. Eastern Time on Monday, August 17, 2009.

Docket Numbers: RP96–200–225.

Applicants: CenterPoint Energy Gas Transmission Company.

Description: CenterPoint Energy Gas Transmission Company submits amended negotiated rate agreements with Cross Timbers Energy Services, Inc.

Filed Date: 8/5/2009.

Accession Number: 20090806–0029.

Comment Date: 5 p.m. Eastern Time on Monday, August 17, 2009.

Docket Numbers: RP09–844–001.

Applicants: Texas Gas Transmission, LLC.

Description: Texas Gas Transmission, LLC submits Substituted First Revised Sheet No. 459 to Third Revised Volume No. 1.

Filed Date: 8/6/2009.

Accession Number: 20090806–0080.

Comment Date: 5 p.m. Eastern Time on Tuesday, August 18, 2009.

Any person desiring to protest this filing must file in accordance with Rule 211 of the Commission's Rules of Practice and Procedure (18 CFR 385.211). Protests to this filing will be considered by the Commission in determining the appropriate action to be taken, but will not serve to make protestants parties to the proceeding. Such protests must be filed on or before 5 p.m. Eastern time on the specified comment date. Anyone filing a protest must serve a copy of that document on all the parties to the proceeding.

The Commission encourages electronic submission of protests in lieu of paper using the ''eFiling'' link at *http://www.ferc.gov.* Persons unable to file electronically should submit an original and 14 copies of the protest to the Federal Energy Regulatory Commission, 888 First Street, NE., Washington, DC 20426.

This filing is accessible on-line at *http://www.ferc.gov,* using the ''eLibrary'' link and is available for review in the Commission's Public Reference Room in Washington, DC. There is an ''eSubscription'' link on the Web site that enables subscribers to receive e-mail notification when a document is added to a subscribed docket(s). For assistance with any FERC Online service, please e-mail *FERCOnlineSupport@ferc.gov,* or call (866) 208–3676 (toll free). For TTY, call (202) 502–8659.

Nathaniel J. Davis, Sr.,

Deputy Secretary.

[FR Doc. E9–19596 Filed 8–14–09; 8:45 am]

BILLING CODE 6717–01–P

DEPARTMENT OF ENERGY

Federal Energy Regulatory Commission

Combined Notice of Filings

August 4, 2009.

Take notice that the Commission has received the following Natural Gas Pipeline Rate and Refund Report filings:

Docket Numbers: RP09–859–000.
Applicants: Bobcat Gas Storage.
Description: Bobcat Gas Storage submits First Revised Sheet No 115 *et al* to FERC Gas Tariff, Original Volume No 1.
Filed Date: 7/31/2009.
Accession Number: 20090803–0058.
Comment Date: 5 p.m. Eastern Time on Wednesday, August 12, 2009.

Docket Numbers: RP09–860–000.
Applicants: Kern River Gas Transmission Company.
Description: Kern River Gas Transmission Company submits Fourteenth Revised Sheet 495 *et al* to its FERC Gas Tariff, Second Revised Volume 1 to be effective 9/4/09.
Filed Date: 7/31/2009.
Accession Number: 20090803–0055.
Comment Date: 5 p.m. Eastern Time on Wednesday, August 12, 2009.

Docket Numbers: RP09–861–000.
Applicants: Equitrans, L.P.
Description: Equitrans, LP submits a nonconforming transportation Service Agreement & Eighth Revised Tariff Sheet 317 *et al.*
Filed Date: 7/31/2009.
Accession Number: 20090803–0056.
Comment Date: 5 p.m. Eastern Time on Wednesday, August 12, 2009.

Docket Numbers: RP09–862–000.
Applicants: Transcontinental Gas Pipeline Company LL.
Description: Transcontinental Gas Pipeline Company, LLC submits First Revised Original Sheet 1 *et al* to FERC Gas Tariff, Fourth Revised Volume 1, to be effective 9/1/09.
Filed Date: 7/31/2009.
Accession Number: 20090803–0057.
Comment Date: 5 p.m. Eastern Time on Wednesday, August 12, 2009.

Docket Numbers: RP09–863–000.
Applicants: Columbia Gas Transmission, LLC.
Description: Columbia Gas Transmission, LLC submits FTS Service Agreement No 10217 *et al.*
Filed Date: 7/31/2009.
Accession Number: 20090803–0052.
Comment Date: 5 p.m. Eastern Time on Wednesday, August 12, 2009.

Docket Numbers: RP09–864–000.
Applicants: Algonquin Gas Transmission, LLC.
Description: Algonquin Gas Transmission, LLC submits Ninth Revised Sheet No 22 *et al* to its FERC Gas Tariff, Fifth Revised Volume No 1.
Filed Date: 7/31/2009.
Accession Number: 20090803–0074.
Comment Date: 5 p.m. Eastern Time on Wednesday, August 12, 2009.

Any person desiring to intervene or to protest in any of the above proceedings must file in accordance with Rules 211 and 214 of the Commission's Rules of Practice and Procedure (18 CFR 385.211 and 385.214) on or before 5 p.m. Eastern time on the specified comment date. It is not necessary to separately intervene again in a subdocket related to a compliance filing if you have previously intervened in the same docket. Protests will be considered by the Commission in determining the appropriate action to be taken, but will not serve to make protestants parties to the proceeding. Anyone filing a motion to intervene or protest must serve a copy of that document on the Applicant. In reference to filings initiating a new proceeding, interventions or protests submitted on or before the comment deadline need not be served on persons other than the Applicant.

The Commission encourages electronic submission of protests and interventions in lieu of paper, using the FERC Online links at *http://www.ferc.gov.* To facilitate electronic service, persons with Internet access who will eFile a document and/or be listed as a contact for an intervenor must create and validate an eRegistration account using the eRegistration link. Select the eFiling link to log on and submit the intervention or protests.

Persons unable to file electronically should submit an original and 14 copies of the intervention or protest to the Federal Energy Regulatory Commission, 888 First St. NE., Washington, DC 20426.

The filings in the above proceedings are accessible in the Commission's eLibrary system by clicking on the appropriate link in the above list. They are also available for review in the Commission's Public Reference Room in Washington, DC. There is an eSubscription link on the Web site that enables subscribers to receive e-mail notification when a document is added to a subscribed dockets(s). For assistance with any FERC Online service, please e-mail *FERCOnlineSupport@ferc.gov.* or call (866) 208–3676 (toll free). For TTY, call (202) 502–8659.

Nathaniel J. Davis, Sr.,

Deputy Secretary.

[FR Doc. E9–19598 Filed 8–14–09; 8:45 am]

BILLING CODE 6717–01–P

DEPARTMENT OF ENERGY

Federal Energy Regulatory Commission

Combined Notice of Filings No. 1

August 10, 2009.

Take notice that the Commission has received the following Natural Gas Pipeline Rate and Refund Report filings:

Docket Numbers: RP09–872–000.
Applicants: Arlington Storage Company, LLC.
Description: Arlington Storage Co, LLC submits Sheet No. 0 *et al.* to FERC Gas Tariff Original Volume No. 1.
Filed Date: 08/06/2009.
Accession Number: 20090807–0093.
Comment Date: 5 p.m. Eastern Time on Tuesday, August 18, 2009.

Docket Numbers: RP09–873–000.

Applicants: Iroquois Gas Transmission System, LP.

Description: Iroquois Gas Transmission System submits Twenty Third Revised Sheet 4A to its FER, L.P. Gas Tariff, First Revised Volume 1 to be effective 10/1/09.

Filed Date: 08/07/2009.

Accession Number: 20090807–0109.

Comment Date: 5 p.m. Eastern Time on Wednesday, August 19, 2009.

Docket Numbers: RP09–874–000.

Applicants: Midcontinent Express Pipeline LLC.

Description: Midcontinent Express Pipeline LLC submits First Revised Sheet No. 14R *et al.* to its FERC Gas Tariff, Original Volume No. 1.

Filed Date: 08/07/2009.

Accession Number: 20090807–0108.

Comment Date: 5 p.m. Eastern Time on Wednesday, August 19, 2009.

Docket Numbers: RP09–875–000.

Applicants: Horizon Pipeline Company, LLC.

Description: Horizon Pipeline Company, LLC submits Sixth Revised Sheet No. 5 to its FERC Gas Tariff, Original Volume No. 1.

Filed Date: 08/07/2009.

Accession Number: 20090807–0107.

Comment Date: 5 p.m. Eastern Time on Wednesday, August 19, 2009.

Docket Numbers: RP09–876–000.

Applicants: Trailblazer Pipeline Company LLC.

Description: Trailblazer Pipeline Company, LLC submits Second Revised Sheet 5 *et al.* to FERC Gas Tariff, Fourth Revised Volume 1 to be effective 10/1/09.

Filed Date: 08/07/2009.

Accession Number: 20090807–0106.

Comment Date: 5 p.m. Eastern Time on Wednesday, August 19, 2009.

Docket Numbers: RP09–877–000.

Applicants: Natural Gas Pipeline Company of America LLC.

Description: Natural Gas Pipeline Company of America LLC submits Second Revised Sheet No. 32, to FERC Gas Tariff, Seventh Revised Volume No. 1.

Filed Date: 08/07/2009.

Accession Number: 20090807–0105.

Comment Date: 5 p.m. Eastern Time on Wednesday, August 19, 2009.

Docket Numbers: RP09–878–000.

Applicants: Kinder Morgan Illinois Pipeline LLC.

Description: Kinder Morgan Illinois Pipeline LLC submits First Revised Sheet No. 5 to its FERC Gas Tariff, Original Volume No. 1.

Filed Date: 08/07/2009.

Accession Number: 20090807–0099.

Comment Date: 5 p.m. Eastern Time on Wednesday, August 19, 2009.

Any person desiring to intervene or to protest in any of the above proceedings must file in accordance with Rules 211 and 214 of the Commission's Rules of Practice and Procedure (18 CFR 385.211 and 385.214) on or before 5 p.m. Eastern time on the specified comment date. It is not necessary to separately intervene again in a subdocket related to a compliance filing if you have previously intervened in the same docket. Protests will be considered by the Commission in determining the appropriate action to be taken, but will not serve to make protestants parties to the proceeding. Anyone filing a motion to intervene or protest must serve a copy of that document on the Applicant. In reference to filings initiating a new proceeding, interventions or protests submitted on or before the comment deadline need not be served on persons other than the Applicant.

The Commission encourages electronic submission of protests and interventions in lieu of paper, using the FERC Online links at *http://www.ferc.gov.* To facilitate electronic service, persons with Internet access who will eFile a document and/or be listed as a contact for an intervenor must create and validate an eRegistration account using the eRegistration link. Select the eFiling link to log on and submit the intervention or protests.

Persons unable to file electronically should submit an original and 14 copies of the intervention or protest to the Federal Energy Regulatory Commission, 888 First St., NE., Washington, DC 20426.

The filings in the above proceedings are accessible in the Commission's eLibrary system by clicking on the appropriate link in the above list. They are also available for review in the Commission's Public Reference Room in Washington, DC. There is an eSubscription link on the Web site that enables subscribers to receive e-mail notification when a document is added to a subscribed docket(s). For assistance with any FERC Online service, please e-mail *FERCOnlineSupport@ferc.gov*, or call (866) 208–3676 (toll free). For TTY, call (202) 502–8659.

Nathaniel J. Davis, Sr.,

Deputy Secretary.

[FR Doc. E9–19597 Filed 8–14–09; 8:45 am]

BILLING CODE 6717–01–P

DEPARTMENT OF ENERGY

Federal Energy Regulatory Commission

Combined Notice of Filings No. 1

August 7, 2009.

Take notice that the Commission has received the following Natural Gas Pipeline Rate and Refund Report filings:

Docket Numbers: RP09–865–000.

Applicants: Natural Gas Pipeline Company of America.

Description: Natural Gas Pipeline Company of America, LLC submits Second Revised Sheet 531 to its FERC Gas Tariff, Seventh Revised Volume 1 to be effective 9/5/09.

Filed Date: 8/5/2009.

Accession Number: 20090805–0031.

Comment Date: 5 p.m. Eastern Time on Monday, August 17, 2009.

Docket Numbers: RP09–866–000.

Applicants: Trailblazer Pipeline Company, LLC.

Description: Trailblazer Pipeline Company, LLC submits Second Revised Sheet 245 to its FERC Gas Tariff, Fourth Revised Volume 1 to be effective 9/5/09.

Filed Date: 8/5/2009.

Accession Number: 20090805–0032.

Comment Date: 5 p.m. Eastern Time on Monday, August 17, 2009.

Docket Numbers: RP09–867–000.

Applicants: Horizon Pipeline Company, L.L.C.

Description: Horizon Pipeline Company, LLC submits Sixth Revised Sheet 224 to its FERC Gas Tariff, Original Volume 1 to be effective 9/5/09.

Filed Date: 8/5/2009.

Accession Number: 20090805–0033.

Comment Date: 5 p.m. Eastern Time on Monday, August 17, 2009.

Docket Numbers: RP09–868–000.

Applicants: Kinder Morgan Louisiana Pipeline, LLC.

Description: Kinder Morgan Louisiana Pipeline, LLC submits Second Revised Sheet 243 to its FERC Gas Tariff, Original Volume 1 to be effective 9/5/09.

Filed Date: 8/5/2009.

Accession Number: 20090805–0035.

Comment Date: 5 p.m. Eastern Time on Monday, August 17, 2009.

Docket Numbers: RP09–869–000.

Applicants: Kinder Morgan Illinois Pipeline LLC.

Description: Kinder Morgan Illinois Pipeline LLC submits Second Revised Sheet 226 of its FERC Gas Tariff, Original Volume 1 to be effective 9/5/09.

Filed Date: 8/5/2009.

Accession Number: 20090805–0034.

Comment Date: 5 p.m. Eastern Time on Monday, August 17, 2009.

Docket Numbers: RP09–870–000.
Applicants: Granite State Gas Transmission, Inc.
Description: Granite State Gas Transmission, Inc submits Thirty Fourth Revised Sheet 21 *et al.* to its FERC Gas Tariff, Second Revised Volume 1 to be effective 10/1/09.
Filed Date: 8/5/2009.
Accession Number: 20090805–0036.
Comment Date: 5 p.m. Eastern Time on Monday, August 17, 2009.

Docket Numbers: RP09–871–000.
Applicants: Midcontinent Express Pipeline LLC.
Description: Midcontinent Express Pipeline, LLC submits Second Revised Sheet 225 to its FERC Gas Tariff, Original Volume 1, to be effective 9/5/09.
Filed Date: 8/5/2009.
Accession Number: 20090806–0024.
Comment Date: 5 p.m. Eastern Time on Monday, August 17, 2009.

Any person desiring to intervene or to protest in any of the above proceedings must file in accordance with Rules 211 and 214 of the Commission's Rules of Practice and Procedure (18 CFR 385.211 and 385.214) on or before 5 p.m. Eastern time on the specified comment date. It is not necessary to separately intervene again in a subdocket related to a compliance filing if you have previously intervened in the same docket. Protests will be considered by the Commission in determining the appropriate action to be taken, but will not serve to make protestants parties to the proceeding. Anyone filing a motion to intervene or protest must serve a copy of that document on the Applicant. In reference to filings initiating a new proceeding, interventions or protests submitted on or before the comment deadline need not be served on persons other than the Applicant.

The Commission encourages electronic submission of protests and interventions in lieu of paper, using the FERC Online links at *http://www.ferc.gov.* To facilitate electronic service, persons with Internet access who will eFile a document and/or be listed as a contact for an intervenor must create and validate an eRegistration account using the eRegistration link. Select the eFiling link to log on and submit the intervention or protests.

Persons unable to file electronically should submit an original and 14 copies of the intervention or protest to the Federal Energy Regulatory Commission, 888 First St., NE., Washington, DC 20426.

The filings in the above proceedings are accessible in the Commission's eLibrary system by clicking on the appropriate link in the above list. They are also available for review in the Commission's Public Reference Room in Washington, DC. There is an eSubscription link on the Web site that enables subscribers to receive e-mail notification when a document is added to any subscribed dockets(s). For assistance with any FERC Online service, please e-mail *FERCOnlineSupport@ferc.gov.* or call (866) 208–3676 (toll free). For TTY, call (202) 502–8659.

Nathaniel J. Davis, Sr.,
Deputy Secretary.
[FR Doc. E9–19595 Filed 8–14–09; 8:45 am]
BILLING CODE 6717–01–P

DEPARTMENT OF ENERGY

Federal Energy Regulatory Commission

Combined Notice of Filings #1

August 6, 2009.

Take notice that the Commission received the following electric corporate filings:

Docket Numbers: EC09–101–000.
Applicants: Nevada Power Company.
Description: Application of Nevada Power Company for Order Authorizing Acquisition of Jurisdictional Facilities Under Section 203 of the Federal Power Act.
Filed Date: 8/5/2009.
Accession Number: 20090805–5080.
Comment Date: 5 p.m. Eastern Time on Wednesday, August 26, 2009.

Take notice that the Commission received the following exempt wholesale generator filings:

Docket Numbers: EG09–81–000.
Applicants: St. Clair Power, L.P.
Description: Notice of Self-Certification of Exempt Wholesale Generator Status of St. Clair Power, L.P.
Filed Date: 8/6/2009.
Accession Number: 20090806–5042.
Comment Date: 5 p.m. Eastern Time on Thursday, August 27, 2009.

Take notice that the Commission received the following electric rate filings:

Docket Numbers: ER07–53–002.
Applicants: American Transmission Company LLC.
Description: American Transmission Company, LLC submits Original Service Agreement No. 2066 to FERC Electric Tariff, Third Revised Volume No. 1 with Wisconsin Electric Power Company, *et al.*
Filed Date: 8/5/2009.
Accession Number: 20090806–0027.
Comment Date: 5 p.m. Eastern Time on Wednesday, August 26, 2009.

Docket Numbers: ER09–1546–000.
Applicants: ISO New England Inc. & New England Power.
Description: ISO New England Inc *et al.* submits Sheet 7016A *et al.* to FERC Electric Tariff 3, section III—Market Rule 1—Standard Market Design section III.1—Market Operations, to be effective 10/5/09.
Filed Date: 8/5/2009.
Accession Number: 20090806–0025.
Comment Date: 5 p.m. Eastern Time on Wednesday, August 26, 2009.

Docket Numbers: ER96–1551–021; ER09–746–002; ER01–615–017.
Applicants: Public Service Company of New Mexico; Optim Energy Marketing, LLC; Public Service Company of New Mexico.
Description: Public Service Company of New Mexico *et al.* submits notice to the Commission of a non-material change in status related to their respective market-based rate authorizations.
Filed Date: 8/5/2009.
Accession Number: 20090806–0026.
Comment Date: 5 p.m. Eastern Time on Wednesday, August 26, 2009.

Any person desiring to intervene or to protest in any of the above proceedings must file in accordance with Rules 211 and 214 of the Commission's Rules of Practice and Procedure (18 CFR 385.211 and 385.214) on or before 5 p.m. Eastern time on the specified comment date. It is not necessary to separately intervene again in a subdocket related to a compliance filing if you have previously intervened in the same docket. Protests will be considered by the Commission in determining the appropriate action to be taken, but will not serve to make protestants parties to the proceeding. Anyone filing a motion to intervene or protest must serve a copy of that document on the Applicant. In reference to filings initiating a new proceeding, interventions or protests submitted on or before the comment deadline need not be served on persons other than the Applicant.

The Commission encourages electronic submission of protests and interventions in lieu of paper, using the FERC Online links at *http://www.ferc.gov.* To facilitate electronic service, persons with Internet access who will eFile a document and/or be listed as a contact for an intervenor must create and validate an eRegistration account using the eRegistration link. Select the eFiling link to log on and submit the intervention or protests.

Persons unable to file electronically should submit an original and 14 copies of the intervention or protest to the Federal Energy Regulatory Commission, 888 First St., NE., Washington, DC 20426.

The filings in the above proceedings are accessible in the Commission's eLibrary system by clicking on the appropriate link in the above list. They are also available for review in the Commission's Public Reference Room in Washington, DC. There is an eSubscription link on the Web site that enables subscribers to receive e-mail notification when a document is added to a subscribed docket(s). For assistance with any FERC Online service, please e-mail *FERCOnlineSupport@ferc.gov,* or call (866) 208–3676 (toll free). For TTY, call (202) 502–8659.

Nathaniel J. Davis, Sr.,

Deputy Secretary.

[FR Doc. E9–19593 Filed 8–14–09; 8:45 am]

BILLING CODE 6717–01–P

DEPARTMENT OF ENERGY

Federal Energy Regulatory Commission

Combined Notice of Filings #1

August 7, 2009.

Take notice that the Commission received the following electric rate filings:

Docket Numbers: ER09–1547–000.
Applicants: PJM Interconnection, LLC.
Description: PJM Interconnection, LLC submits an executed interconnection service agreement entered in among PJM *et al.*
Filed Date: 8/6/2009.
Accession Number: 20090806–0099.
Comment Date: 5 p.m. Eastern Time on Thursday, August 27, 2009.

Docket Numbers: ER09–1548–000.
Applicants: Midwest Independent Transmission System Operator, Inc.
Description: Midwest Independent Transmission System Operator, Inc. submits notice of succession of certain transmission service agreements and network integration transmission service etc. Part 1 of 5.
Filed Date: 8/6/2009.
Accession Number: 20090806–0094.
Comment Date: 5 p.m. Eastern Time on Thursday, August 27, 2009.

Docket Numbers: ER09–1550–000.
Applicants: PJM Interconnection, LLC.
Description: PJM Interconnection, LLC submits Original Service Agreement 2261 to its FERC Electric Tariff, Sixth Revised Volume 1.
Filed Date: 8/6/2009.
Accession Number: 20090807–0089.
Comment Date: 5 p.m. Eastern Time on Thursday, August 27, 2009.

Docket Numbers: ER09–1551–000.
Applicants: PJM Interconnection, LLC.
Description: PJM Interconnection, LLC submits executed Wholesale Market Participation Agreement with Sunnyside Ethanol, LLC *et al.*
Filed Date: 8/6/2009.
Accession Number: 20090807–0090.
Comment Date: 5 p.m. Eastern Time on Thursday, August 27, 2009.

Docket Numbers: ER09–1552–000.
Applicants: PJM Interconnection, LLC.
Description: PJM Interconnection, LLC submits an executed Wholesale Market Participation Agreement with Solar Cap, LLC *et al.*
Filed Date: 8/7/2009.
Accession Number: 20090807–0091.
Comment Date: 5 p.m. Eastern Time on Friday, August 28, 2009.

Docket Numbers: ER09–1553–000.
Applicants: Carolina Power & Light Company.
Description: Carolina Power & Light Company submits Second Revised Service Agreement to its FERC Electric Tariff, Fourth Revised Volume 3.
Filed Date: 8/7/2009.
Accession Number: 20090807–0092.
Comment Date: 5 p.m. Eastern Time on Friday, August 28, 2009.

Take notice that the Commission received the following electric reliability filings:

Docket Numbers: RR08–6–003.
Applicants: North American Electric Reliability Corp.
Description: Request of the North American Electric Reliability Corporation for Approval of Supplemental 2009 Budget and Funding Request for the Midwest Reliability Organization.
Filed Date: 8/6/2009.
Accession Number: 20090806–5079.
Comment Date: 5 p.m. Eastern Time on Tuesday, September 8, 2009.

Docket Numbers: RR09–8–000.
Applicants: North American Electric Reliability Corp.
Description: Petition for Approval of Amendments to the Bylaws of the North American Electric Reliability Corporation.
Filed Date: 8/6/2009.
Accession Number: 20090806–5081.
Comment Date: 5 p.m. Eastern Time on Tuesday, September 8, 2009.

Any person desiring to intervene or to protest in any of the above proceedings must file in accordance with Rules 211 and 214 of the Commission's Rules of Practice and Procedure (18 CFR 385.211 and 385.214) on or before 5 p.m. Eastern time on the specified comment date. It is not necessary to separately intervene again in a subdocket related to a compliance filing if you have previously intervened in the same docket. Protests will be considered by the Commission in determining the appropriate action to be taken, but will not serve to make protestants parties to the proceeding. Anyone filing a motion to intervene or protest must serve a copy of that document on the Applicant. In reference to filings initiating a new proceeding, interventions or protests submitted on or before the comment deadline need not be served on persons other than the Applicant.

The Commission encourages electronic submission of protests and interventions in lieu of paper, using the FERC Online links at *http://www.ferc.gov.* To facilitate electronic service, persons with Internet access who will eFile a document and/or be listed as a contact for an intervenor must create and validate an eRegistration account using the eRegistration link. Select the eFiling link to log on and submit the intervention or protests.

Persons unable to file electronically should submit an original and 14 copies of the intervention or protest to the Federal Energy Regulatory Commission, 888 First St., NE., Washington, DC 20426.

The filings in the above proceedings are accessible in the Commission's eLibrary system by clicking on the appropriate link in the above list. They are also available for review in the Commission's Public Reference Room in Washington, DC. There is an eSubscription link on the Web site that enables subscribers to receive e-mail notification when a document is added to a subscribed docket(s). For assistance with any FERC Online service, please e-mail *FERCOnlineSupport@ferc.gov* or call (866) 208–3676 (toll free). For TTY, call (202) 502–8659.

Nathaniel J. Davis, Sr.,

Deputy Secretary.

[FR Doc. E9–19592 Filed 8–14–09; 8:45 am]

BILLING CODE 6717–01–P

DEPARTMENT OF ENERGY

Federal Energy Regulatory Commission

[Project No. 2210–169 Virginia]

Appalachian Power Company; Notice of Availability of the Final Environmental Impact Statement for the Smith Mountain Pumped Storage Project

August 7, 2009.

In accordance with the National Environmental Policy Act of 1969 and the Federal Energy Regulatory Commission's (Commission) regulations, 18 CFR part 380 (Order No. 486, 52 FR 47897), the Office of Energy Projects has reviewed the application for license for the Smith Mountain Pumped Storage Project (FERC No. 2210), located on the headwaters of the Roanoke River in Bedford, Campbell, Franklin, and Pittsylvania counties in the Commonwealth of Virginia. Commission staff has prepared a final Environmental Impact Statement (EIS) for the project.

The final EIS contains staff's evaluation of the applicant's proposal and the alternatives for relicensing the Smith Mountain Project. The final EIS documents the views of governmental agencies, non-governmental organizations, affected Indian tribes, the public, the license applicant, and Commission staff.

A copy of the final EIS is available for review in the Commission's Public Reference Branch, Room 2A, located at 888 First Street, NE., Washington, DC 20426. The draft EIS also may be viewed on the Commission's Web site at *http://www.ferc.gov*, under the eLibrary link. Enter the docket number excluding the last three digits in the docket number field to access the document. For assistance, contact FERC Online Support at *FERCOnlineSupport@ferc.gov* or toll-free at 1–866–208–3676, or for TTY, (202) 502–8659.

You may also register online at *http://www.ferc.gov/docs-filing/esubscription.asp* to be notified via e-mail of new filings and issuances related to this or other pending projects. For assistance, contact FERC Online Support.

For further information, contact Allan Creamer at (202) 502–8365, or via e-mail at *allan.creamer@ferc.gov*.

Nathaniel J. Davis, Sr.,

Deputy Secretary.

[FR Doc. E9–19613 Filed 8–14–09; 8:45 am]

BILLING CODE 6717–01–P

DEPARTMENT OF ENERGY

Federal Energy Regulatory Commission

[Docket No. CP09–449–000]

Wyoming Interstate Company, Ltd.; Notice of Filing

August 10, 2009.

Take notice that on July 29, 2009, Wyoming Interstate Company, Ltd. (WIC), Post Office Box 1087, Colorado Springs, Colorado 80944, filed an application, pursuant to section 7(c) of the Natural Gas Act (NGA) and part 157 of the Commission's Rules and Regulations, for a certificate of public convenience and necessity authorizing WIC to construct, own, operate and maintain a new compressor station located in Uintah County, Utah (the Diamond Mountain Compressor Station). WIC also requests a pre-determination of rolled-in rate treatment for the costs associated with the project and approval of incremental fuel charges for transportation service provided by the proposed facilities. The application is on file with the Commission and open for public inspection. This filing is available for review at the Commission in the Public Reference Room or may be viewed on the Commission's Web site at *http://www.ferc.gov* using the ''eLibrary'' link. Enter the docket number excluding the last three digits in the docket number field to access the document. For assistance, please contact FERC Online Support at *FERCOnlineSupport@ferc.gov* or toll free at (866) 208–3676, or for TTY, contact (202) 502–8659.

Pursuant to the demand for additional pipeline capacity on WIC's Kanda Lateral pipeline system from producers with gas supplies in the geologic Uinta Basin of Utah, the proposed project will require the installation of two Taurus 70 compressor units totaling 20,604 horsepower. The Diamond Mountain Compressor Station will create an additional capacity of 180,000 MMcf/day on the Kanda Lateral. Bill Barrett Corporation (Barrett) and Anadarko Energy Services Company (Andarko) have entered into transportation precedent agreements supporting the project for a term of 10 years. The facilities will be constructed on a 15 acre site managed by the BLM. WIC requests a pre-determination of rolled-in rate treatment for the project costs, exclusive of fuel costs which will be recovered through new incremental charges. WIC proposes a service date of October 31, 2010.

Any questions regarding the application are to be directed to Richard Derryberry, Director, Regulatory Affairs Department, Wyoming Interstate Company, Ltd., P.O. Box 1087, Colorado Springs, Colorado 80904; phone number (719) 520–3782.

Any person wishing to obtain legal status by becoming a party to the proceedings for this project should, on or before the below listed comment date, file with the Federal Energy Regulatory Commission, 888 First Street, NE., Washington, DC 20426, a motion to intervene in accordance with the requirements of the Commission's Rules of Practice and Procedure (18 CFR 385.214 or 385.211) and the Regulations under the NGA (18 CFR 157.10). A person obtaining party status will be placed on the service list maintained by the Secretary of the Commission and will receive copies of all documents filed by the applicant and by all other parties. A party must submit 14 copies of filings made with the Commission and must mail a copy to the applicant and to every other party in the proceeding. Only parties to the proceeding can ask for court review of Commission orders in the proceeding.

Motions to intervene, protests and comments may be filed electronically via the Internet in lieu of paper, see, 18 CFR 385.2001 (a)(1)(iii) and the instructions on the Commission's Web site under the ''e-Filing'' link. The Commission strongly encourages electronic filings.

Comment Date: August 31, 2009.

Kimberly D. Bose,

Secretary.

[FR Doc. E9–19622 Filed 8–14–09; 8:45 am]

BILLING CODE 6717–01–P

DEPARTMENT OF ENERGY

Federal Energy Regulatory Commission

[Docket No. ER09–1522–000]

Torofino Trading, LLC; Supplemental Notice That Initial Market-Based Rate Filing Includes Request for Blanket Section 204 Authorization

August 6, 2009.

This is a supplemental notice in the above-referenced proceeding of Torofino Trading, LLC's application for market-based rate authority, with an accompanying rate tariff, noting that such application includes a request for blanket authorization, under 18 CFR Part 34, of future issuances of securities and assumptions of liability.

Any person desiring to intervene or to protest should file with the Federal Energy Regulatory Commission, 888 First Street, NE., Washington, DC 20426, in accordance with Rules 211 and 214 of the Commission's Rules of Practice and Procedure (18 CFR 385.211 and 385.214). Anyone filing a motion to intervene or protest must serve a copy of that document on the Applicant.

Notice is hereby given that the deadline for filing protests with regard to the applicant's request for blanket authorization, under 18 CFR Part 34, of future issuances of securities and assumptions of liability, is August 26, 2009.

The Commission encourages electronic submission of protests and interventions in lieu of paper, using the FERC Online links at *http://www.ferc.gov.* To facilitate electronic service, persons with Internet access who will eFile a document and/or be listed as a contact for an intervenor must create and validate an eRegistration account using the eRegistration link. Select the eFiling link to log on and submit the intervention or protests.

Persons unable to file electronically should submit an original and 14 copies of the intervention or protest to the Federal Energy Regulatory Commission, 888 First St., NE., Washington, DC 20426.

The filings in the above-referenced proceeding are accessible in the Commission's eLibrary system by clicking on the appropriate link in the above list.

They are also available for review in the Commission's Public Reference Room in Washington, DC. There is an eSubscription link on the Web site that enables subscribers to receive e-mail notification when a document is added to a subscribed dockets(s). For assistance with any FERC Online service, please e-mail *FERCOnlineSupport@ferc.gov.* or call (866) 208–3676 (toll free). For TTY, call (202) 502–8659.

Nathaniel J. Davis, Sr.,

Deputy Secretary.

[FR Doc. E9–19600 Filed 8–14–09; 8:45 am]

BILLING CODE P

DEPARTMENT OF ENERGY

Federal Energy Regulatory Commission

[Docket Nos. IN02–7–001; CP78–532–012]

Ozark Gas Transmission, LLC; Notice of Petition To Terminate Stipulation and Consent Agreements

August 6, 2009.

Take notice that on July 24, 2009, Ozark Gas Transmission, LLC (Ozark) filed a petition to terminate two stipulation and consent agreements between Ozark and the Commission's Enforcement Staff that limits Ozark's use of its blanket construction certificate and imposes specific pre-construction procedures.

Any person desiring to intervene or to protest this filing in accordance with Rules 211 and 214 of the Commission's Rules of Practice and Procedure (18 CFR 385.211 and 385.214). Protests will be considered by the Commission in determining the appropriate action to be taken, but will not serve to make protestants parties to the proceeding. Any person wishing to become a party must file a notice of intervention or motion to intervene, as appropriate. Such notices, motions, or protests must be filed on or before the date indicated below. Anyone filing a motion to intervene or protest must serve a copy of that document on the Applicant. In reference to filings initiating a new proceeding, interventions or protests submitted on or before the comment deadline need not be served on persons other than the Applicant.

The Commission encourages electronic submission of protests and interventions in lieu of paper, using the FERC Online links at *http://www.ferc.gov.* Persons unable to file electronically should submit an original and 14 copies of the intervention or protest to the Federal Energy Regulatory Commission, 888 First St., NE., Washington, DC 20426.

This filing is accessible on-line at *http://www.ferc.gov,* using the ''eLibrary'' link and is available for review in the Commission's Public Reference Room in Washington, DC. There is an ''eSubscription'' link on the Web site that enables subscribers to receive e-mail notification when a document is added to a subscribed docket(s). For assistance with any FERC Online service, please e-mail *FERCOnlineSupport@ferc.gov,* or call (866) 208–3676 (toll free). For TTY, call (202) 502–8659.

Comment Date: 5 p.m. Eastern Time August 18, 2009.

Nathaniel J. Davis, Sr.,

Deputy Secretary.

[FR Doc. E9–19601 Filed 8–14–09; 8:45 am]

BILLING CODE P

ENVIRONMENTAL PROTECTION AGENCY

[ER–FRL–8596–3]

Environmental Impacts Statements; Notice of Availability

Responsible Agency: Office of Federal Activities, General Information (202) 564–1399 or *http://www.epa.gov/compliance/nepa/.*

Weekly receipt of Environmental Impact Statements

Filed 08/03/2009 through 08/07/2009

Pursuant to 40 CFR 1506.9.

EIS No. 20090275, Final EIS, FHW, KY, I–65 to US 31 W Access Improvement Project, to Meet the Existing and Future Transportation Demand, in northeast Bowling Green, Warren County, KY, *Wait Period Ends:* 09/14/2009, *Contact:* Jose Sepulveda 502–223–6764.

EIS No. 20090276, Final Supplement, COE, WA, Commencement Bay ''Reauthorization'' of Dredged Material Management Program Disposal Site, Implementation, Central Puget Sound, Tacoma, WA, *Wait Period Ends:* 09/14/2009, *Contact:* Dr. Stephen Martin 206–764–3631.

EIS No. 20090277, Draft EIS, AFS, CO, Hermosa Park/Mitchell Lakes Land Exchange Project, Proposed Land Exchange between Federal and Non-Federal Lands, Implementation, Federal Land in LaPlata County and Non-Federal Land in San Juan County, CO, *Comment Period Ends:* 09/28/2009, *Contact:* Cindy Hockelberg 970–884–1418.

EIS No. 20090278, Draft Supplement, FHW, NH, I–93 Highway Improvements, from Massachusetts State Line to Manchester, NH, Funding, NPDES and US Army COE section 404 Permits Issuance, Hillsborough and Rockingham Counties, NH, *Comment Period Ends:* 09/28/2009, *Contact:* Jamison S. Sikora 603–228–3057 Ext. 107.

EIS No. 20090279, Draft EIS, BLM, WA, Blackfoot Bridge Mine Project, Developing Three Mine Pits, Haul Roads, Water Management Structures, and Overburden Disposal Areas, Implementation, Caribou County, ID, *Comment Period Ends:* 09/28/2009, *Contact:* Kyle Free 208–478–6368.

EIS No. 20090280, Draft Supplement, FHW, TN, Shelby Avenue/ Demonbreun Street (Gateway Boulevard Corridor, from I–65 North [I–24 West] to I–40 West in Downtown Nashville, To Address Transportation needs in the Study Area. Davidson County, TN, *Comment Period Ends:* 09/28/2009, *Contact:* Charles O'Neill 615–781–5770.

EIS No. 20090281, Final EIS, BLM, WY, South Gillette Area Coal Lease Applications, WYW172585, WYW173360, WYW172657,WYW161248, Proposal to Lease Four Tracts of Federal Coal Reserves, Belle Ayr, Coal Creek, Caballo, and Cordero Rojo Mines, Wyoming Powder River Basin, Campbell County, WY, *Wait Period Ends:* 09/14/2009, *Contact:* Teresa Johnson 307–261–7510.

EIS No. 20090282, Final EIS, FRC, VA, Smith Mountain Pumped Storage Project (FERC No. 2210–169). Application for Hydropower License to continue Operating the636-megawatt Pumped Storage Project, Roanoke River, Smith Mountain Pumped Storage Project (FERC No. 2210–169). Application for Hydropower License to continue Operating the 636-megawatt Pumped Storage Project, Roanoke River, Bedford, Campbell, Franklin and Pittsylvania Counties, VA, *Wait Period Ends:* 09/14/2009, *Contact:* Julia Bovey 1–866–208–3372.

EIS No. 20090283, Draft EIS, NPS, WI, Apostle Islands National Lakeshore General Management Plan/Wilderness Management Plan, Implementation, Bayfield and Ashland Counties, WI, *Comment Period Ends:* 10/13/2009, *Contact:* Nick Chevance 402–661–1844.

EIS No. 20090284, Final EIS, ARD, WA, Adoption—White Pass Expansion Master Development Plan, Implementation, Naches Ranger District, Okanogan-Wenatchee National Forests and Cowlitz Valley Ranger District, Gifford Pinchot National Forest, Yakima and Lewis Counties, WA, *Wait Period Ends:* 09/14/2009, *Contact:* Frank Mancino 202–720–1827.

The U.S. Department of Agriculture, Rural Development Program has adopted the U.S. Department of Agriculture, Forest Service's FEIS #20070279 filed 06/29/2007. Rural Development Program was not a Cooperating Agency on the above FEIS. Under section 1506.3(b) of the CEQ Regulations, the FEIS must be Recirculated for a 30-day Wait Period.

Amended Notices

EIS No. 20090262, Draft EIS, EPA, GU, Apra Harbor, Guam, Proposed Site Designation of an Ocean Dredged Material Disposal Site Offshore of Guam, *Comment Period Ends:* 10/06/2009, *Contact:* Allan Ota 415–972–3476. Revision to FR Notice Published 07/31/2009: Correction to the Comment Period from 09/28/2009 to 10/06/2009.

Dated: August 11, 2009.

Ken Mittelholtz,

Environmental Protection Specialist, Office of Federal Activities.

[FR Doc. E9–19557 Filed 8–14–09; 8:45 am]

BILLING CODE 6560–50–P

OFFICE OF SCIENCE AND TECHNOLOGY POLICY

DEPARTMENT OF HOMELAND SECURITY

ENVIRONMENTAL PROTECTION AGENCY

[Docket No. EPA–HQ–ORD–2009–0331; FRL–8939–6]

Availability of Draft ''Planning Guidance for Recovery Following Biological Incidents''

AGENCIES: White House Office of Science and Technology Policy (OSTP), U.S. Department of Homeland Security (DHS) and the U.S. Environmental Protection Agency (EPA).

ACTION: Notice of availability.

SUMMARY: The Homeland Security Act of 2002 (Pub. L. 107–296 Section 301) directs the U.S. Department of Homeland Security, in partnership with other federal agencies, to develop and implement countermeasures to prepare for and respond to chemical, biological, radiological and nuclear threats. The White House Office of Science and Technology Policy (OSTP), U.S. Department of Homeland Security (DHS) and the U.S. Environmental Protection Agency (EPA) are issuing a draft guidance document entitled ''*Planning Guidance for Recovery Following Biological Incidents*'' for federal, state, local, and tribal decision makers who may find it useful in planning and responding to a biological incident.

This draft Guidance describes a general risk management framework for government and nongovernmental decision-makers, at all levels, in planning and executing activities required for response and recovery from a biological incident in a domestic, civilian setting. The objective of this guidance is to provide federal, state, local, and tribal decision makers with uniform federal guidance to protect the public, emergency responders, and surrounding environments and to ensure that local and federal first responders can prepare for an incident involving biological contamination. This draft Guidance is not intended to impact site cleanups occurring under other statutory authorities such as EPA's Superfund Program, or other federal and state clean-up programs.

This draft guidance is provided for immediate use, and will be revised as needed based on comments received and changes in regulation and emergency response guidance. The draft guidance is available at: *http://www.regulations.gov*. (Docket no. EPA–HQ–ORD–2009–0331).

DATES: Comments must be received by November 16, 2009.

FOR FURTHER INFORMATION CONTACT: Mr. Brendan Doyle, Senior Policy Advisor, National Homeland Security Research Center, Office of Research and Development, U.S. Environmental Protection Agency (MC: 8801R), 1200 Pennsylvania Avenue, NW., Washington, DC 20460, Telephone: 202 564–4584 or *doyle.brendan@epa.gov*.

SUPPLEMENTARY INFORMATION:

Background

The Homeland Security Act of 2002 (Pub. L. 107–296, as amended) directs DHS, in partnership with other federal agencies, to develop and implement countermeasures to prepare for and respond to chemical, biological, radiological, and nuclear threats. *Homeland Security Presidential Directive—10: Biodefense for the 21st Century* describes the interagency activity required to meet this charge.

This draft Planning Guidance was developed by the Biological Decontamination Standards Working Group (an interagency working group) of the White House National Science and Technology Council (NSTC) Subcommittee on Decontamination Standards and Technology (SDST). The SDST was tasked by the NSTC to develop risk management guidance for recovery from an incident involving biological contamination in a domestic, civilian setting. The interagency workgroup included participants from the Departments of Homeland Security, Agriculture, Commerce, Defense, Energy, Labor, Health and Human Services and Transportation and the Environmental Protection Agency. This draft guidance describes a general risk management framework for government

and nongovernmental decision-makers, at all levels, in planning and executing activities required for response and recovery from a biological incident in a domestic, civilian setting. The objective of this guidance is to provide federal, state, local, and tribal decision makers with uniform federal guidance to protect the public, emergency responders, and surrounding environments and to ensure that local and federal first responders can prepare for an incident involving biological contamination.

This document follows principles developed within the context of *Planning Guidance for Protection and Recovery Following Radiological Dispersal Device (RDD) and Improvised Nuclear Device (IND) Incidents*—which was published by the U.S. Department of Homeland Security (DHS) on August 1, 2008. The RDD/IND document introduced the overarching concept of optimization. Optimization is a flexible, multi-attribute decision process that seeks to weigh many factors. Optimization analyses are qualitative and quantitative assessments applied at each stage of decision-making process from evaluation of decontamination options to implementation of the chosen alternative.

The subject draft guidance applies to characterization, decontamination, clearance, and potential reoccupancy of a variety of public facilities, drinking water infrastructure, and open areas. Principal topics include the unique characteristics and hazards of biological agents, a risk management framework for responding to a biological incident, and implications for remediation activities. A process is provided for making timely and effective decisions despite incomplete data and uncertainties associated with potential risks posed by biological agents. This decision process includes all actions required during response to a biological incident beginning with notification, screening, and environmental sampling. Each step in the decision-making process is described, and the various actions are explicitly linked to numbered boxes in a five-page decision-tree flowchart.

An important step in the decision process is setting clearance (or cleanup) goals for determining whether a remediation is successful and how the treated area may be used. No formula is available for setting clearance goals for biological agents. The collective, professional judgment of experts, considered within the context of the concerns of a broad range of local, regional, and federal stakeholders should be used to set a clearance goal appropriate to the site-specific circumstances. A practical clearance goal is to reduce residual risk to levels acceptable by employing an optimization process. The aim of such a process is to reduce exposure levels as low as is reasonable while considering potential future land uses, technical feasibility, costs and cost effectiveness, and public acceptability. After the remediation is carried out, a clearance decision is made based on a judgment whether the decontamination verification criteria and the clearance goals have been met. This judgment is based on a thorough analysis of all sampling, processes, and other pertinent data.

This draft document focuses on the decision making framework in response to a biological event. It is designed to be consistent with the *National Response Framework* (Department of Homeland Security, January 2008) and our scientific understanding of the characteristics of biological agents. Neither of these areas is static. We expect both our response planning and our scientific understanding of the characteristics of biological agents to evolve over time.

Response to Comments

Comments will be reviewed by the White House National Science and Technology Council before this guidance is republished.

Availability of the Draft Guidance

Copies of the draft guidance are available for review through *http://www.regulations.gov*, Docket number: EPA–HQ–ORD–2009–0331.

Dated: July 27, 2009.

James Kohlenberger,

Chief of Staff, Office of Science and Technology Policy, Executive Office of the President.

Bradley I. Buswell,

Undersecretary for Science and Technology (Acting), U.S. Department of Homeland Security.

Lek G. Kadeli,

Acting Assistant Administrator for Research and Development, U.S. Environmental Protection Agency.

[FR Doc. E9–19688 Filed 8–14–09; 8:45 am]

BILLING CODE 6560–50–P

EXPORT-IMPORT BANK OF THE U.S.

[Public Notice 123]

Agency Information Collection Activities: Proposed Collection; Comment Request Marketing Fax Back Response Form

AGENCY: Export-Import Bank of the U.S.

ACTION: Notice and request for comments.

SUMMARY: The Export-Import Bank invites the general public and other Federal Agencies to comment on the proposed information collection, as required by the Paperwork Reduction Act of 1995. The Marketing Fax Back Response Form will be used to collect basic trade information about United States companies. This information will be provided to the Export Import Bank's finance consultants nationwide to assist in providing counsel to exporters.

DATES: Electronic comments may be submitted through Regulations.Gov. Comments must be received on or before September 16, 2009 to be considered.

ADDRESSES: Direct all comments and requests for additional information to Office of Management and Budget, Office of Information and Regulatory Affairs, 725 17th Street, NW., Washington, DC 20038.

SUPPLEMENTARY INFORMATION:

Title and Form Number: Marketing Fax Back Response Form EIB 05–01.

OMB Number: 3048-.

Type of Review: Regular.

Need and Use: This form will provide basic trade information about U.S. Companies and will provide the Export Import Bank's trade finance consultants nationwide the ability to provide counsel to exporters.

Affected Public: The form affects entities involved in the export of U.S. goods and services.

Estimated Annual Respondents: 1,500.

Estimated Time per Respondent: 5 minutes.

Estimated Annual Burden: 125 hours.

Frequency of Reporting or Use: One time for registration

Sharon A. Whitt,

Agency Clearance Officer.

BILLING CODE 6690–01–P

Fax Response Form

Export-Import Bank of the United States

To: **Marketing Team** **Fax to:**

202-565-3723

(you may tape business card here)

Name:
Title:
Company:
Address:
City:
State & Zip:
Tel:
Fax:
E-mail:

___ Yes, I would also like a FREE trade consultation to help increase our company's international sales.

(If CA, please specify county)

Web Site:

Ex-Im Bank has trade finance consultants and partners in your region to assist you with your export challenges. *You may be assured that all information will be treated as business confidential to the extent provided by federal law.* Check us out at www.exim.gov. Thank you.

Please contact me. I am interested in:

Extending credit to our foreign buyers and protecting against nonpayment
Obtaining sufficient working capital
Assisting our buyers to obtain term financing for capital goods or services

My company is a:	Manufacturer	Wholesaler / Distributor	Service Provider
My company is:	Women-Owned	Minority-Owned	Environment-Related

My company has _____ employees (including parent and affiliates).

* We export some goods that have at least 50% U.S. content (i.e., based on product cost, including parts and/or labor).

My company currently exports the following products:

_____
_____
_____
_____
_____
_____

* My company currently exports to the following countries (please list individual countries):

_____
_____
_____
_____

_____

_____

* We provide the following payment terms to our foreign buyers:

Cash in Advance
Open Account - Number of days: _____
Letters of Credit
Credit Card
Other: please specify _____

My company's annual export sales volume is: $ _____ (specify thousands or millions)

My company's primary bank is: _____

* **Information required**

[FR Doc. E9–19699 Filed 8–14–09; 8:45 am]

BILLING CODE 6690–01–C

FEDERAL COMMUNICATIONS COMMISSION

Notice of Public Information Collections Being Submitted for Review to the Office of Management and Budget, Comments Requested

AGENCY: Federal Communications Commision.

SUMMARY: The Federal Communications Commission, as part of its continuing effort to reduce paperwork burden invites the general public and other Federal agencies to take this opportunity to comment on the following information collection(s), as required by the Paperwork Reduction Act of 1995, 44 U.S.C. 3501–3520. An agency may not conduct or sponsor a collection of information unless it displays a currently valid control number. No person shall be subject to any penalty for failing to comply with a collection of information subject to the Paperwork Reduction Act (PRA) that does not display a valid control number. Comments are requested concerning (a) whether the proposed collection of information is necessary for the proper performance of the functions of the Commission, including whether the information shall have practical utility; (b) the accuracy of the Commission's burden estimate; (c) ways to enhance the quality, utility, and clarity of the information collected; and (d) ways to minimize the burden of the collection of information on the respondents, including the use of automated collection techniques or other forms of information technology.

DATES: Persons wishing to comments on this information collection should submit comments on September 16, 2009. If you anticipate that you will be submitting comments, but find it difficult to do so within the period of time allowed by this notice, you should advise the contact listed below as soon as possible.

ADDRESSES: Direct all PRA comments to Nicholas A. Fraser, Office of Management and Budget (OMB), (202) 395–5887, or via fax at (202) 395–5167, or via the Internet at *Nocholas_A._Fraser@omb.eop.gov* and to Cathy Williams, Federal Communications Commission (FCC), Room 1–C823, 445 12th Street, SW., Washington, D.C. 20554. To submit your comments by e–mail send them to: PRA@fcc.gov and to *Cathy.Williams@fcc.gov*. To view a copy of this information collection request (ICR) submitted to OMB: (1) Go to web page: *http://www.reginfo.gov/public/do/PRAMain*, (2) look for the section of the web page called ''Currently Under Review'', (3) click on the downward–pointing arrow in the ''Select Agency'' box below the ''Currently Under Review'' heading, (4) select ''Federal Communications Commission'' from the list of agencies presented in the ''Select Agency'' box, (5) click the ''Submit'' button to the right of the ''Select Agency'' box, and (6) when the FCC list appears, look for the title of this ICR (or its OMB Control Number, if there is one) and then click on the ICR.

FOR FURTHER INFORMATION CONTACT: For additional information about the information collection(s) send an e–mail to PRA@fcc.gov or contact Cathy Williams on (202) 418–2918.

SUPPLEMENTARY INFORMATION:

OMB Control Number: 3060–1115.

Title: DTV Consumer Education Initiative; Section 73.674; FCC Form 388.

Form Number: FCC Form 388.

Type of Review: Revision of a currently approved collection.

Respondents: Business or other for–profit entities; Not–for–profit institutions; State, local or tribal governments.

Number of Respondent and Responses: 200 respondents; 1,800 responses.

Estimated time per Response: 0.50 hours – 85 hours.

Frequency of Response: On occasion reporting requirement; Quarterly reporting requirement; Third party disclosure requirement.

Obligation to Respond: Required to obtain benefits. The statutory authority for this collection of information is contained in Sections 4(i), 303(r), 335, and 336 of the Communications Act of 1934, as amended, 47 U.S.C. §§ 154(i), 303(r), 335, and 336.

Total Annual Burden: 10,940 hours.

Total Annual Cost: None.

Confidentiality: No need for confidentiality required with this collection of information.

Privacy Impact Assessment: No impact(s).

Needs and Uses: After the nationwide DTV transition date of June 12, 2009, full–power television broadcast stations must transmit only digital signals, and may no longer transmit analog signals, except for limited analog ''nightlight'' service. The DTV Delay Act directs the Commission to take any actions ''necessary or appropriate to implement the provisions, and carry out the

purposes'' of the DTV Delay Act, and to do so within 30 days. Congress extended the transition date in order to permit analog service to continue until consumers have had additional time to prepare. But Congress also directed the Commission to provide flexibility for stations wanting to transition prior to the new date. Stations may have made extensive preparations for a February 17 digital transition and some may have difficulty altering their commitments at this time. The Commission's challenge is to provide opportunities for some stations to end analog broadcasting early without sacrificing the goal of giving consumers additional time to prepare.

Therefore, Commission is revising this information collection to eliminate most of the requirements after June 30, 2009; however, broadcasters must continue to comply with the consumer education information collection requirements until they have completed, and are operating, their final, full–authorized post–transition (DTV) facility.

The information collection requirements that will remain in the collection are as follows:

Broadcaster Education and Reporting (47 CFR 73.674).

(a) On–air Education. Broadcasters must provide on–air DTV Transition consumer education information (e.g., via Public Service Announcements (PSAs), information crawls, snipes or tickers) to their viewers. Broadcasters must comply with one of three alternative sets of rules as provided in the Report and Order. Stations must also provide the following additional information: (1) geographically specific information detailing areas that are covered by the Grade B analog contour but are not predicted to receive digital service; (2) educational information describing areas where analog signal strength is generally sufficient for viewers to rely on an indoor antenna but where it is likely that they will need an outdoor antenna to receive the digital signal; (3) information to consumers about the need to periodically ''rescan'' when using over–the–air digital reception equipment, particularly through the end of the transition; (4) stations that are changing their broadcast frequency from VHF to UHF (or vice versa), information to consumers about the need for additional or different equipment to avoid loss of service. Stations may include this information to satisfy part of their existing PSA requirements. In addition, if applicable, stations must provide specific notice to analog viewers who are likely to lose over–the–air service from the station due to changes in the geographic coverage area or population served by the station during or after the transition. Broadcasters must continue to provide on air education to their viewers until they complete their transition to digital–only operations and are operating their final, full–authorized post–transition (DTV) facility. In most cases, stations will be operating at full–authorized post–transition (DTV) facilities no later than the June 12, 2009 nationwide transition deadline, but, in some cases, stations will not have completed construction of their final, fully–authorized DTV facility by June 12 and, therefore, must continue to provide on–air DTV Transition consumer education information to their viewers.

(b) DTV Consumer Education Quarterly Activity Report, FCC Form 388. Broadcasters must electronically file a report about its DTV Transition consumer education efforts to the Commission on a quarterly basis. Broadcasters must begin filing these quarterly reports no later than April 10, 2008. In addition, if the broadcaster has a public Web site, they must post these reports on that Web site. Broadcasters must complete these filings every quarter until they complete their transition to digital–only operations and are operating their final, full–authorized post–transition (DTV) facility.

OMB Control Number: 3060–0386.

Title: Special Temporary Authorization (STA) Requests; Notifications; and Informal Filings; Sections 1.5, 73.1615, 73.1635 and 73.1740; CDBS Informal Forms.

Form Number: Not applicable.

Type of Review: Revision of a currently approved collection.

Respondents: Business or other for–profit entities; Not–for–profit institutions.

Number of Respondents and Responses: 3,070 respondents; 3,070 responses.

Estimated Time per Response: 0.50 hours – 4 hours.

Frequency of Response: On occasion reporting requirement.

Obligation to Respond: Required to obtain or retain benefits. The statutory authority for this information collection is contained in Sections 1, 4(i) and (j), 7, 301, 302, 303, 307, 308, 309, 312, 316, 318, 319, 324, 325, 336, and 337 of the Communications Act of 1934, as amended.

Confidentiality: No need for confidentiality required with this collection of information.

Total Annual Burden: 3,105.

Total Annual Costs: $1,929,410.

Privacy Impact Assessment(s): No impact(s).

Needs and Uses: The Commission is revising this information collection to eliminate the information collection requirements necessitated by the DTV transition. After the June 12, 2009 nationwide transition deadline, there will be no further need for these DTV transition–related collections. In addition, the Commission is revising this collection to update the specific Informal Application filing forms that may be filed electronically through the Commission's Consolidated Database System (''CDBS'').

The following information collection requirements are contained in this collection:

Special Temporary Authority (STA) Requests (47 CFR § 73.1635). Broadcast stations (AM, FM, TV, Class A TV or LPTV licensees or permittes) may file a request for STA approval to permit a station to operate a broadcast facility for a limited period at a specified variance from the terms of the station's authorization or requirements of the FCC rules. Stations may file a request for STA approval for a variety of reasons. The request must describe the operating modes and facilities to be used. Types of STA requests include Engineering and Legal STAs.

Change in Official Mailing Address for Broadcast Station (47 CFR § 1.5). Broadcast stations may file this form to report any changes in the station's mailing address, but cannot use this form to correct or change the name of the licensee.

Consummation Notice. Broadcast stations may file this form to notify the Commission when an assignment of license or transfer of control is consummated. The form also may be used by the station to request an extension of time to consummate.

Silent Notifications (47 CFR § 73.1740). Broadcast stations (AM, FM, TV or Class A TV licensees) may file this form to notify the Commission of the station's suspension of broadcast operations pursuant to 47 C.F.R. § 73.1740. Broadcast stations also may use this form to request a silent STA or extension thereof. Types of Silent Notifications include Silent STA, Notification of Suspension, Resumption of Operations, and Extension of Silent STA Request.

Section 73.1615 notifications (47 CFR § 73.1615). Broadcast stations (AM, FM, TV or Class A TV licensees) must file a notification under 47 CFR 73.1615(c) when such a station is in the process of

modifying existing facilities as authorized by a construction permit and determines it is necessary to either discontinue operation or to operate with temporary facilities to continue program service for a period not more than 30 days. Licensees or permittees of directional or nondirectional FM, TV or Class A TV or nondirectional AM must file a notification and comply with 47 CFR 73.1615(a). Licensees or permittees of a directional AM station whose modification does not involve a change in operating frequency must file a notification and comply with 47 CFR 73.1615(b). Licensees or permittees of a directional AM station whose modification does involve a change in frequency and determines it is necessary to discontinue operation for a period not more than 30 days must file a notification and comply with 47 CFR 73.1615(d)(2).

Section 73.1615 informal letter requests (47 CFR § 73.1615). Broadcast stations (AM, FM, TV or Class A TV licensees or permittees) must file an informal letter request under 47 CFR 73.1615(c)(1) when such a station is in the process of modifying existing facilities pursuant to 47 CFR 73.1615(a) or (b) and determines it is necessary to either discontinue operation or to operate with temporary facilities to continue program service for a period of more than 30 days. Licensees or permittees that filed notifications under 47 CFR 73.1615(d)(2) but which determine that it is necessary to discontinue operation for a period more than 30 days must file an informal letter request and comply with 47 CFR 73.1615(d)(1) and (2).

Federal Communications Commission.

Marlene H. Dortch,

Secretary.

[FR Doc. E9–19672 Filed 8–14–09; 8:45 am]

BILLING CODE: 6712–01–S

FEDERAL RESERVE SYSTEM

Formations of, Acquisitions by, and Mergers of Bank Holding Companies

The companies listed in this notice have applied to the Board for approval, pursuant to the Bank Holding Company Act of 1956 (12 U.S.C. 1841 *et seq.*) (BHC Act), Regulation Y (12 CFR Part 225), and all other applicable statutes and regulations to become a bank holding company and/or to acquire the assets or the ownership of, control of, or the power to vote shares of a bank or bank holding company and all of the banks and nonbanking companies owned by the bank holding company, including the companies listed below.

The applications listed below, as well as other related filings required by the Board, are available for immediate inspection at the Federal Reserve Bank indicated. The applications also will be available for inspection at the offices of the Board of Governors. Interested persons may express their views in writing on the standards enumerated in the BHC Act (12 U.S.C. 1842(c)). If the proposal also involves the acquisition of a nonbanking company, the review also includes whether the acquisition of the nonbanking company complies with the standards in section 4 of the BHC Act (12 U.S.C. 1843). Unless otherwise noted, nonbanking activities will be conducted throughout the United States. Additional information on all bank holding companies may be obtained from the National Information Center Web site at *www.ffiec.gov/nic/*.

Unless otherwise noted, comments regarding each of these applications must be received at the Reserve Bank indicated or the offices of the Board of Governors not later than September 10, 2009.

A. Federal Reserve Bank of Atlanta (Steve Foley, Vice President) 1000 Peachtree Street, N.E., Atlanta, Georgia 30309:

1. Heart of Georgia Bancshares, Inc., Mount Vernon, Georgia; to acquire 100 percent of the voting shares of The Tattnall Bank, Reidsville, Georgia.

B. Federal Reserve Bank of San Francisco (Kenneth Binning, Vice President, Applications and Enforcement) 101 Market Street, San Francisco, California 94105-1579:

1. Golden Pacific Bancorp, Sacramento, California; to acquire 100 percent of Gold Country Financial Services, Inc, and thereby indirectly acquire Gold Country Bank, N.A., both of Marysville, California.

Board of Governors of the Federal Reserve System, August 12, 2009.

Robert deV. Frierson,

Deputy Secretary of the Board.

[FR Doc. E9–19630 Filed 8–14–09; 8:45 am]

BILLING CODE 6210–01–S

DEPARTMENT OF HEALTH AND HUMAN SERVICES

Office of the Secretary

Notice of Meeting: Secretary's Advisory Committee on Genetics, Health, and Society

Pursuant to Public Law 92–463, notice is hereby given of the twentieth meeting of the Secretary's Advisory Committee on Genetics, Health, and Society (SACGHS), U.S. Public Health Service. The meeting will be held from 8:30 a.m. to approximately 6 p.m. on Thursday, October 8, 2009, and from 8 a.m. to approximately 3:30 p.m. on Friday, October 9, 2009, at the Hubert H. Humphrey Building, 200 Independence Avenue SW., Washington, DC 20201. The meeting will be open to the public with attendance limited to space available. The meeting also will be Web cast.

The main agenda items involve the review of three SACGHS draft reports: a final draft report and its recommendations on gene patents and licensing practices along with comments received on the public consultation draft circulated earlier this year; a public consultation draft report on genetics education and training; and a revised draft paper on direct-to-consumer genetic testing. The first day of the meeting will include an extended period of time for interested members of the public to provide their perspectives on gene patents and licensing practices and their effect on patient access to genetic tests. Members of the public are encouraged to contact the SACGHS Executive Secretary (see below) by September 15, 2009, if they wish to participate in this extended public comment period. Other agenda items include an update on regulations implementing the Genetic Information Nondiscrimination Act, a report on activities of the Clinical Utility and Comparative Effectiveness Task Force, and a brief discussion to initiate the Committee's work on ethical issues related to genomic data sharing.

As always, the Committee welcomes hearing from anyone wishing to provide public comment on any issue related to genetics, health and society. Individuals who would like to provide public comment should notify the SACGHS Executive Secretary, Ms. Sarah Carr, by telephone at 301–496–9838 or e-mail at *carrs@od.nih.gov*. The SACGHS office is located at 6705 Rockledge Drive, Suite 750, Bethesda, MD 20892. Anyone planning to attend the meeting who needs special assistance, such as sign language interpretation or other reasonable accommodations, is also asked to contact the Executive Secretary.

Under authority of 42 U.S.C. 217a, section 222 of the Public Health Service Act, as amended, the Department of Health and Human Services established SACGHS to serve as a public forum for deliberations on the broad range of human health and societal issues raised by the development and use of genetic and genomic technologies and, as

warranted, to provide advice on these issues. The draft meeting agenda and other information about SACGHS, including information about access to the Web cast, will be available at the following Web site: *http://oba.od.nih.gov/SACGHS/sacghs_meetings.html.*

Dated: August 10, 2009.

Jennifer Spaeth,

Director, NIH Office of Federal Advisory Committee Policy.

[FR Doc. E9–19584 Filed 8–14–09; 8:45 am]

BILLING CODE 4140–01–P

DEPARTMENT OF HEALTH AND HUMAN SERVICES

Sterilization of Persons in Federally Assisted Family Planning Projects (July 17, 2009); Correction

AGENCY: Department of Health and Human Services.

ACTION: Notice: correction.

SUMMARY: The Department of Health and Human Services (HHS) published a document in the **Federal Register** of July 17, 2009, requesting OMB reauthorization of the form ''Sterilization of Persons in Federally Assisted Family Planning Projects.'' The document contained an incorrect citation to the HHS sterilization regulations; incorrectly identified the Office of Population Affairs (OPA), rather than the Public Health Service (PHS), as the agency within HHS that administers programs of health services which are supported by Federal financial assistance and which are required to obtain informed consent from persons undergoing sterilizations; incorrectly described the form that is required to be used to obtain informed consent; and incorrectly referred to the regulations to which the consent form is appended as OPA regulations rather than PHS regulations.

FOR FURTHER INFORMATION CONTACT: Sherette Funn-Coleman, 202–690–5683.

Corrections:

In the **Federal Register** of July 17, 2009, in FR Doc. OS–0937–0166, on page 34757, in the second column, correct the citation to the sterilization regulations to read:

Proposed Project: HHS 42 CFR part 50, subpart B; Sterilization of Persons in Federally Assisted Family Planning Projects—

In the third column, correct the ''Abstract'' related to the consent form to read as follows:

The consent form solicits information to assure voluntary and informed consent to persons undergoing sterilization in programs of health services which are supported by Federal financial assistance administered by the Public Health Service (PHS). The form provides additional procedural protections to individuals undergoing sterilization. In order to obtain informed consent, the regulation requires that programs use either the form that is appended to the PHS regulation or another consent form approved by the Secretary.

Dated: August 7, 2009.

Seleda Perryman,

Office of the Secretary, Paperwork Reduction Act Reports Clearance Officer.

[FR Doc. E9–19566 Filed 8–14–09; 8:45 am]

BILLING CODE 4150–34–P

DEPARTMENT OF HEALTH AND HUMAN SERVICES

Food and Drug Administration

[Docket No. FDA–2008–P–0443]

Determination That DEMADEX (Torsemide) Injection, 20 Milligrams/2 Milliliter (10 Milligrams/Milliliter) and 50 Milligrams/5 Milliliter (10 Milligrams/Milliliter), Was Not Withdrawn From Sale for Reasons of Safety or Effectiveness

AGENCY: Food and Drug Administration, HHS.

ACTION: Notice.

SUMMARY: The Food and Drug Administration (FDA) is announcing its determination that DEMADEX (torsemide) injection, 20 milligrams (mg)/2 milliliter (mL) (10 mg/mL) and 50 mg/5 mL (10 mg/mL), was not withdrawn from sale for reasons of safety or effectiveness. This determination will allow FDA to approve abbreviated new drug applications (ANDAs) for torsemide injection, 20 mg/2mL (10 mg/mL) and 50 mg/5 mL (10 mg/mL), if all other legal and regulatory requirements are met.

FOR FURTHER INFORMATION CONTACT: Nikki Mueller, Center for Drug Evaluation and Research, Food and Drug Administration, 10903 New Hampshire Ave., Bldg. 51, rm. 6312, Silver Spring, MD 20993–0002, 301–796–3601.

SUPPLEMENTARY INFORMATION: In 1984, Congress enacted the Drug Price Competition and Patent Term Restoration Act of 1984 (Public Law 98–417 (the 1984 amendments)), which authorized the approval of duplicate versions of drug products approved under an ANDA procedure. ANDA applicants must, with certain exceptions, show that the drug for which they are seeking approval contains the same active ingredient in the same strength and dosage form as the ''listed drug,'' which is a version of the drug that was previously approved. ANDA applicants do not have to repeat the extensive clinical testing otherwise necessary to gain approval of a new drug application (NDA). The only clinical data required in an ANDA are data to show that the drug that is the subject of the ANDA is bioequivalent to the listed drug.

The 1984 amendments include what is now section 505(j)(7) of the Federal Food, Drug, and Cosmetic Act (21 U.S.C. 355(j)(7)), which requires FDA to publish a list of all approved drugs. FDA publishes this list as part of the ''Approved Drug Products With Therapeutic Equivalence Evaluations,'' which is known generally as the ''Orange Book.'' Under FDA regulations, drugs are removed from the list if the agency withdraws or suspends approval of the drug's NDA or ANDA for reasons of safety or effectiveness, or if FDA determines that the listed drug was withdrawn from sale for reasons of safety or effectiveness (21 CFR 314.162). Under § 314.161(a)(1) (21 CFR 314.161(a)(1)), the agency must determine whether a listed drug was withdrawn from sale for reasons of safety or effectiveness before an ANDA that refers to that listed drug may be approved. FDA may not approve an ANDA that does not refer to a listed drug.

PharmaForce, Inc., submitted a citizen petition dated August 5, 2008 (Docket No. FDA–2008–P–0443), under 21 CFR 10.30 requesting that the agency determine whether DEMADEX (torsemide) injection, 20 mg/2 mL (10 mg/mL) and 50 mg/5 mL (10 mg/mL), was withdrawn from sale for reasons of safety or effectiveness. DEMADEX (torsemide) injection is the subject of NDA 20–137, held by Roche Pharmaceuticals (Roche) and was initially approved on August 23, 1993. DEMADEX is indicated for the treatment of edema associated with congestive heart failure, renal disease, or hepatic disease. Roche notified FDA on June 16, 2008, that it was no longer marketing DEMADEX (torsemide) injection, 20 mg/2 mL (10 mg/mL) and 50 mg/5 mL (10 mg/mL), and the drug product was moved to the ''Discontinued Drug Product List'' section of the Orange Book.

FDA has reviewed its records and, under § 314.161, has determined that DEMADEX (torsemide) injection, 20 mg/2 mL (10 mg/mL) and 50 mg/5 mL (10

mg/mL), was not withdrawn from sale for reasons of safety or effectiveness. The petitioner identified no data or other information suggesting that DEMADEX (torsemide) injection, 20 mg/2 mL (10 mg/mL) and 50 mg/5 mL (10 mg/mL), was withdrawn for reasons of safety or effectiveness. FDA has independently evaluated relevant literature and data for possible postmarketing adverse events and has found no information that would indicate that this product was withdrawn from sale for reasons of safety or effectiveness. Accordingly, the agency will continue to list DEMADEX (torsemide) injection, 20 mg/2 mL (10 mg/mL) and 50 mg/5 mL (10 mg/mL), in the ''Discontinued Drug Product List'' section of the Orange Book. The ''Discontinued Drug Product List'' delineates, among other items, drug products that have been discontinued from marketing for reasons other than safety or effectiveness. ANDAs that refer to DEMADEX (torsemide) injection, 20 mg/2 mL (10 mg/mL) and 50 mg/5 mL (10 mg/mL), may be approved by the agency if all other legal and regulatory requirements for the approval of ANDAs are met. If FDA determines that labeling for this drug product should be revised to meet current standards, the agency will advise ANDA applicants to submit such labeling.

Dated: August 7, 2009.

Jeffrey Shuren,

Associate Commissioner for Policy and Planning.

[FR Doc. E9–19641 Filed 8–14–09; 8:45 am]

BILLING CODE 4160–01–S

DEPARTMENT OF HEALTH AND HUMAN SERVICES

Food and Drug Administration

[Docket No. FDA–2009–D–0268]

Draft Guidance for Industry: Labeling of Certain Beers Subject to the Labeling Jurisdiction of the Food and Drug Administration; Availability; Agency Information Collection Activities; Proposed Collection; Comment Request

AGENCY: Food and Drug Administration, HHS.

ACTION: Notice.

SUMMARY: The Food and Drug Administration (FDA) is announcing the availability of a draft guidance document entitled ''Guidance for Industry: Labeling of Certain Beers Subject to the Labeling Jurisdiction of the Food and Drug Administration.'' This guidance, when finalized, will provide industry with information on how to label beers that are subject to FDA's labeling laws and regulations. This draft guidance is being issued in light of the recent ruling by the Alcohol and Tobacco Tax and Trade Bureau (TTB) (formerly The Bureau of Alcohol, Tobacco, and Firearms (ATF)) clarifying that certain beers do not meet the definition of a ''malt beverage'' under the Federal Alcohol Administration Act (FAA Act). Because these beers are not subject to the labeling provisions of the FAA Act, they are subject to the labeling provisions of the Federal Food, Drug, and Cosmetic Act (FD&C Act) and the Fair Packaging and Labeling Act (FPLA). FDA, in this draft guidance, also reminds manufacturers that the labeling of wine beverages containing less than 7 percent alcohol by volume, such as wine coolers, diluted wine beverages, dealcoholized or partially dealcoholized wine and ciders, is also subject to FDA labeling requirements. FDA is also announcing an opportunity for public comment on the proposed collection of certain information by the agency.

DATES: Submit written or electronic comments on the draft guidance at any time. Submit written or electronic comments on the proposed collection of information by October 16, 2009.

ADDRESSES: Submit written comments on this draft guidance, including comments regarding the proposed collection of information, to the Division of Dockets Management (HFA–305), Food and Drug Administration, 5630 Fishers Lane, rm. 1061, Rockville, MD 20852. Submit electronic comments on the draft guidance, including comments regarding the proposed collection of information, to *http://www.regulations.gov*. Submit written requests for single copies of the draft guidance to Office of Nutrition, Labeling and Dietary Supplements, Center for Food Safety and Applied Nutrition (HFS–800), Food and Drug Administration, 5100 Paint Branch Pkwy., College Park, MD 20740. Send two self-addressed adhesive labels to assist that office in processing your request. See the **SUPPLEMENTARY INFORMATION** section for electronic access to the draft guidance.

FOR FURTHER INFORMATION CONTACT:

With regard to the draft guidance: Loretta A. Carey, Center for Food Safety and Applied Nutrition (HFS–820), Food and Drug Administration, 5100 Paint Branch Pkwy., College Park, MD 20740, 301–436–2371.

With regard to the proposed collection of information: Jonna Capezzuto, Office of Information Management (HFA–710), Food and Drug Administration, 5600 Fishers Lane, Rockville, MD 20857, 301–796–3794.

SUPPLEMENTARY INFORMATION:

I. Background

FDA is announcing the availability of the draft guidance entitled ''Guidance for Industry: Labeling of Certain Beers Subject to the Labeling Jurisdiction of the Food and Drug Administration.'' This guidance, when finalized, will provide industry with information on how to label beers that are subject to FDA's labeling laws and regulations. FDA, in this draft guidance, also reminds manufacturers that the labeling of wine beverages containing less than 7 percent alcohol by volume, such as wine coolers, diluted wine beverages, dealcoholized or partially dealcoholized wine and ciders, is also subject to FDA labeling requirements (Ref. 1).

As reflected in the 1987 Memorandum of Understanding between FDA and TTB's predecessor agency, the ATF (Ref. 2), TTB is responsible for the issuance and enforcement of regulations with respect to the labeling of distilled spirits, wines, and malt beverages under the FAA Act.

TTB recently clarified that certain beers, which are not made from both malted barley and hops but are instead made from substitutes for malted barley (such as sorghum, rice or wheat), or are made without hops do not meet the definition of a malt beverage under the FAA Act (see TTB Ruling 2008–3) (Ref. 3). TTB stated in its ruling that such products (other than sake, which is classified as a wine under the FAA Act) are not subject to the labeling, advertising, and other provisions of the TTB regulations issued under the FAA Act. Therefore, these beers are subject to the labeling requirements under FDA's laws and regulations. However, as explained in the TTB ruling, some TTB labeling requirements such as the Government Health Warning Statement under the Alcoholic Beverage Labeling Act and certain marking requirements under the Internal Revenue Code continue to apply to these products.

This draft guidance is intended to assist manufacturers in labeling beers that are subject to FDA's labeling laws and regulations. In general, FDA requires that food products under its labeling jurisdiction be truthfully and informatively labeled in accordance with the FD&C Act and the FPLA, and FDA's implementing regulations. These FDA labeling requirements are explained in the draft guidance document.

FDA is issuing this draft guidance as a level 2 guidance consistent with FDA's good guidance practices regulation (21 CFR 10.115). This draft guidance represents the agency's current thinking on this topic. It does not create or confer any rights for or on any person and does not operate to bind FDA or the public. An alternative approach may be used if such approach satisfies the requirements of the applicable statues and regulations.

II. Paperwork Reduction Act of 1995

Under the PRA (44 U.S.C. 3501–3520), Federal agencies must obtain approval from the Office of Management and Budget (OMB) for each collection of information they conduct or sponsor. ''Collection of information'' is defined in 44 U.S.C. 3502(3) and 5 CFR 1320.3(c) and includes agency requests or requirements that members of the public submit reports, keep records, or provide information to a third party. Section 3506(c)(2)(A) of the PRA (44 U.S.C. 3506(c)(2)(A)) requires Federal agencies to provide a 60-day notice in the **Federal Register** concerning each proposed collection of information before submitting the collection to OMB for approval. To comply with this requirement, FDA is publishing notice of the proposed collection of information set forth in this document.

With respect to the following collection of information, FDA invites comments on these topics: (1) Whether the proposed collection of information is necessary for the proper performance of FDA's functions, including whether the information will have practical utility; (2) the accuracy of FDA's estimate of the burden of the proposed collection of information, including the validity of the methodology and assumptions used; (3) ways to enhance the quality, utility, and clarity of the information to be collected; and (4) ways to minimize the burden of the collection of information on respondents, including through the use of automated collection techniques, when appropriate, and other forms of information technology.

Title: Labeling of Certain Beers Subject to the Labeling Jurisdiction of the Food and Drug Administration (OMB Control Number 0910–NEW)

This draft guidance is intended to assist manufacturers in labeling beers that are subject to FDA's labeling laws and regulations. All labeling regulations discussed in this draft guidance have been previously approved by OMB in accordance with the PRA under OMB Control No. 0910–0381. The regulations approved under OMB Control No. 0910–0381 include §§ 101.3, 101.4, 101.5, 101.9, 101.22, and 101.105 (21 CFR 101.3, 101.4, 101.5, 101.9, 101.22, and 101.105). The proposed information collection seeks to add manufacturers of certain beers that do not meet the definition of a ''malt beverage'' under the FAA Act as new respondents to these labeling regulations. The proposed information collection also seeks OMB approval of allergen labeling of these beers under section 403(w)(1) of the FD&C Act (21 U.S.C. 343(w)(1)), which was added by the Food Allergen Labeling and Consumer Protection Act of 2004 (FALCPA).

Section 101.3 of FDA's food labeling regulations requires that the label of a food product in packaged form bear a statement of identity, (i.e., the name of the product), including, as appropriate, the form of the food or the name of the food imitated. Section 101.4 prescribes the requirements for the declaration of ingredients on the label or labeling of food products in packaged form, including using the common or usual name of each ingredient. Section 101.5 requires that the label of a food product in packaged form specify the name and place of business of the manufacturer, packer, or distributor and, if the food producer is not the manufacturer of the food product, its connection with the food product. Section 101.9 requires that nutrition information be provided for all food products intended for human consumption and offered for sale, unless an exemption in § 101.9(j) applies to the product. Section 101.22 contains labeling requirements for the disclosure of spices, flavorings, colorings, and chemical preservatives (§ 101.22(j)) in food products. Section 101.105 specifies requirements for the declaration of the net quantity of contents on the label of a food in packaged form.

Under the FD&C Act, as amended by the FALCPA, the food source name of any ''major food allergen'' present must be declared (section 403(w)(1) of the FD&C Act, (21 U.S.C. 343(w)(1))). Section 201(qq) of the FD&C Act, (21 U.S.C. 321(qq)), defines ''major food allergen'' as milk, egg, fish, Crustacean shellfish, tree nuts, wheat, peanuts, and soybeans, as well as any food ingredient that contains protein derived from one of them, with the exception of highly refined oils.

Description of respondents: The respondents to this collection of information are manufacturers of beers that are subject to FDA's labeling laws and regulations.

FDA estimates the burden of this collection of information as follows:

TABLE 1.—ESTIMATED ANNUAL REPORTING BURDEN[1]

Citation	No. of Respondents	Annual Frequency per Response	Total Annual Responses	Hours per Response	Total Hours
21 CFR 101.3 and 101.22	12	2	24	.5	12
21 CFR 101.4	12	2	24	1	24
21 CFR 101.5	12	2	24	0.25	6
21 CFR 101.9	12	2	24	4	96
21 CFR 101.105	12	2	24	0.5	12
Section 403(w)(1) of the Federal Food, Drug, and Cosmetic Act	12	2	24	1	24
Guidance Document, ''Labeling of Certain Beers Subject to the Labeling Jurisdiction of the Food and Drug Administration''	12	1	12	1	12

TABLE 1.—ESTIMATED ANNUAL REPORTING BURDEN[1]—Continued

Citation	No. of Respondents	Annual Frequency per Response	Total Annual Responses	Hours per Response	Total Hours
Total					186

[1]There are no capital costs or operating and maintenance costs associated with this collection of information.

FDA's estimate of the number of respondents in table 1 is based on the number of regulatory submissions submitted to TTB for beers that do not meet the definition of a ''malt beverage'' under the FAA Act. Based on its records of submissions received from manufacturers of such products, TTB estimates the number of respondents to be 12 and the number of submissions annually to be 25. Thus, FDA adopts TTB's estimate of 12 respondents, and an annual frequency per response of 2, in table 1 of this document.

FDA's estimate of the hours per response for each regulation is based on FDA's experience with food labeling under the agency's jurisdiction. The estimated hours per response for §§ 101.3, 101.4, 101.5, 101.9, 101.22, and 101.105 in table 1 of this document are equal to, and based upon, the estimated hours per response approved by OMB in OMB Control No. 0910–0381. FDA further estimates that the labeling burden of section 403(w)(1) of the FD&C Act, which specifies requirements for the declaration of food allergens, will be 1 hour based upon the similarity of the requirements to that of § 101.4. Finally, FDA estimates that a respondent will spend 1 hour reading the guidance document, once finalized.

Thus, FDA estimates that 12 respondents will each label two products annually, for a total of 24 labels. FDA estimates that the manufacturers will spend 7.25 hours (0.5 hours + 1 hour + 0.25 hour + 4 hours + 0.5 hour + 1 hour = 7.25 hours) on each label to comply with FDA's labeling regulations and the requirements of section 403(w)(1), for a total of 174 hours (24 labels x 7.25 hours = 174 hours). In addition, 12 respondents will each spend 1 hour reading the guidance document, for a total of 12 hours. Thus, FDA estimates the total hour burden of the proposed collection of information to be 186 hours (174 hours + 12 hours = 186 hours).

Before the proposed information collection provisions contained in this draft guidance become effective, FDA will publish a notice in the **Federal Register** announcing OMB's decision to approve, modify, or disapprove the information collection provisions. An agency may not conduct or sponsor, and a person is not required to respond to, a collection of information unless it displays a currently valid OMB control number.

This draft guidance also refers to previously approved collections of information found in FDA regulations. The collections of information in §§ 101.3, 101.4, 101.5, 101.9, 101.22, and 101.105 have been approved under OMB Control No. 0910–0381.

III. Comments

Interested persons may submit written or electronic comments regarding this draft guidance document, including comments regarding the proposed collection of information. Written comments should be submitted to the Division of Dockets Management (see **ADDRESSES**). Electronic comments should be submitted to *http://www.regulations.gov*. Submit a single copy of electronic comments or two paper copies of any mailed comments, except that individuals may submit one paper copy. Comments are to be identified with the docket number found in brackets in the heading of this document. Received comments may be seen in the Division of Dockets Management between 9 a.m. and 4 p.m., Monday through Friday.

IV. Electronic Access

Persons with access to the Internet may obtain the draft guidance at *http://www.fda.gov/FoodGuidances*.

V. References

We have placed the following references on display in the Division of Dockets Management (see **ADDRESSES**). The references may be seen between 9 a.m. and 4 p.m., Monday through Friday. FDA has verified the Web site addresses, but it is not responsible for any subsequent changes to the Web site addresses after this document publishes in the **Federal Register**.

1. FDA Compliance Policy Guide (CPG) 7101.04 (Dealcoholized Wine and Malt Beverages- Labeling), available at *http://www.fda.gov/ICECI/ComplianceManuals/CompliancePolicyGuidanceManual/ucm074430.htm* and CPG 7101.05 (Labeling —Diluted Wines and Cider with Less Than 7% Alcohol), available at *http://www.fda.gov/ICECI/ComplianceManuals/CompliancePolicyGuidanceManual/ucm074431.htm*.

2. Memorandum of Understanding 225–88–2000 between FDA and Bureau of Alcohol, Tobacco and Firearms, available at *http://www.fda.gov/AboutFDA/PartnershipsCollaborations/MemorandaofUnderstandingMOUs/DomesticMOUs/ucm116370.htm*.

3. TTB Ruling 2008–3 dated July 7, 2008, available at *http://www.fda.gov/AboutFDA/PartnershipsCollaborations/MemorandaofUnderstandingMOUs/DomesticMOUs/ucm116370.htm*.

Dated: August 11, 2009.

Jeffrey Shuren,

Associate Commissioner for Policy and Planning.

[FR Doc. E9–19640 Filed 8–14–09; 8:45 am]

BILLING CODE 4160–01–S

DEPARTMENT OF HEALTH AND HUMAN SERVICES

National Institutes of Health

Government-Owned Inventions; Availability for Licensing

AGENCY: National Institutes of Health, Public Health Service, HHS.

ACTION: Notice.

SUMMARY: The inventions listed below are owned by an agency of the U.S. Government and are available for licensing in the U.S. in accordance with 35 U.S.C. 207 to achieve expeditious commercialization of results of Federally-funded research and development. Foreign patent applications are filed on selected inventions to extend market coverage for companies and may also be available for licensing.

ADDRESSES: Licensing information and copies of the U.S. patent applications listed below may be obtained by writing to the indicated licensing contact at the Office of Technology Transfer, National Institutes of Health, 6011 Executive Boulevard, Suite 325, Rockville, Maryland 20852–3804; telephone: 301/496–7057; fax: 301/402–0220. A signed Confidential Disclosure Agreement will be required to receive copies of the patent applications.

Development of a New Carbohydrate Antibody to GalNac1–3Gal

Description of Technology: The present invention provides a monoclonal antibody that binds

specifically to the antigen GalNAc1–3Gal present in human cancers, including squamous cell cancer, human cervical cancer, human esophageal cancer, human laryngeal cancer, and human skin cancer. The antibody can be used to monitor expression of this carbohydrate for a variety of purposes. In immunohistochemical staining of tissues, the antibody stains a variety of carcinomas, with good staining of cervical, larynx, and skin squamous cell carcinomas. Positive antibody staining of cervical cancer tissue correlates with a good prognosis (increased 5 year survival rate) and as such may be useful as a prognostic marker. NCI also has the parent cell line for production of the antibody and several other variant antibodies with similar reactivity.

Applications

- Cervical cancer diagnostics and prognosis.
- A research tool.

Market

- Cancer is the second leading cause of death in the U.S.A. There is an acute need for cancer biomarkers that can be detected from clinically relevant samples and used for early diagnosis, therapeutic follow-up and prognosis of malignant diseases.
- Estimated new cases and deaths from cervical (uterine cervix) cancer in the United States in 2009: 11,270 new cases; 4,070 deaths according to the National Cancer Institute.

Inventors: Jeffrey C. Gildersleeve *et al.* (NCI).

Patent Status: U.S. Provisional Application No. 61/165, 675 filed 01 Apr 2009 (HHS Reference No. E–058–2009/0–US–01).

Licensing Status: Available for licensing.

Licensing Contact: Betty B. Tong, Ph.D.; 301–594–6565; *tongb@mail.nih.gov*.

Deletion of the Beta 20–21 Loop in HIV GP120 Exposes the CD4 Binding Site for Improved Antibody Binding and Antibody

Description of Technology: With the number of individuals infected with HIV approaching nearly one percent (1%) of the world's population, an effective vaccine is urgently needed. As an enveloped virus, HIV hides most of its proteins and genes from humoral recognition behind a protective lipid bilayer. An available exposed viral target for neutralizing antibodies is the envelope spike. Genetic, immunologic and structural studies of the HIV envelope glycoproteins have revealed extraordinary diversity as well as multiple overlapping mechanisms of humoral evasion, including self-masquerading glycan, immunodominant variable loops, and conformational masking. These evolutionarily-honed barriers of antigenic diversity and immune evasion have confounded traditional means of vaccine development. It is believed that immunization with effectively immunogenic HIV gp120 envelope glycoprotein can elicit a neutralizing response directed against gp120, and thus HIV. The need exists for immunogens that are capable of eliciting a protective immune response.

This application claims isolated immunogens, including variant gp120 polypeptides and the use of these polypeptides to induce an immune response to HIV. This application also claims virus-like particles including the variant gp120 polypeptides. More specifically, this application claims virus-like particles including variant gp120–HBsAg hybrid constructs, which may also include at least one TLR ligand.

Application: Development of Human Immunodeficiency Virus (HIV) vaccines, therapeutics and diagnostics.

Advantages: VLP gp120 vaccine, use of HBsAg vector for delivery.

Development Status: Vaccine candidates have been synthesized and preclinical studies have been performed.

Inventor: Ira Berkower (FDA).

Publication: I Berkower *et al.* Targeted deletion in the beta20-beta21 loop of HIV envelope glycoprotein gp120 exposes the CD4 binding site for antibody binding. Virology. 2008 Aug 1;377(2):330–338.

Patent Status: U.S. Provisional Application 61/155,782 filed 26 Feb 2009 (HHS Reference No. E–299–2008/0–US–01).

Licensing Status: Available for licensing.

Licensing Contact: Peter A. Soukas, J.D.; 301–435–4646; *soukasp@mail.nih.gov*.

Multilayered RF Coil System for Improving Transmit B1 Field Homogeneity in High-Field MRI

Description of Technology: Available for licensing and commercial development is a multilayered radio-frequency (RF) coil system for improving the transmit B1 field homogeneity for magnetic resonance imaging (MRI) at high field strengths. The current invention aims at manipulating the inhomogeneous profile of the transmit B1 field, which causes MR images to become less uniform as the magnetic field strength is increased, by utilizing an inner array of RF elements (*e.g.* surface coils) within and coupled to an outer transmit unit (*e.g.* a birdcage coil or other volume coil). Improvement in B1 field homogeneity is achieved by tuning the surface coils of the inner layer to an appropriate resonant frequency and then passively coupling them to the outer-layer volume coil. Furthermore, the amount of coupling is determined by the intrinsic properties of the transmit unit and can be adjusted accordingly. The current design provides an effective approach for reducing B1 field homogeneity at high fields and can be implemented without the need for independent RF channels, thereby reducing MRI system complexity. Furthermore it can be readily implemented on existing MRI coil systems by detuning surface coils rather than decoupling them during the transmit phase.

Applications

- High-Field MRI.
- Improvement of MR Image Uniformity.

Market: Manufacturers of MRI hardware and accessories.

Development Status: The technology is ready to be used and requires only testing in humans for development.

Inventors: Alan Koretsky, Jeff Duyn, Shumin Wang, Hellmut Merkle (NINDS).

Publications

1. S Wang and JH Duyn, ''Three-Dimensional Automatic Mesh Generation for Hybrid Electromagnetic Simulations'', IEEE Antennas and Propagation Magazine, Vol. 51, pp. 71–85, April 2009.
2. H Merkle, J Murphy-Boesch, S Wang, P van Gelderen, AP Koretsky, and JH Duyn, ''Graded Transmit B1 Field Correction at 7T Using Tunable Inner Elements'', ISMRM High-field Workshop, Rome, Italy, October 2008.
3. H Merkle, S Wang, P van Gelderen, TQ Li, J Murphy-Boesch, AP Koretsky, and JH Duyn, ''B1 Transmit Field Correction at 7T Using Coupled Inner Elements'', ISMRM 2008, Toronto, Canada, May, 2008.
4. S Wang, H Merkle, AP Koretsky, and JH Duyn, ''Improving High-Field Transmit B1 Field Homogeneity Using Coupled Inner Elements'', 15th Scientific Meeting and Exhibition, International Society for Magnetic Resonance in Medicine, Berlin, Germany, May 2007.

Patent Status

- U.S. Provisional Application No. 60/900,972 filed 13 Feb 2007 (HHS Reference No. E–020–2007/0–US–01).
- PCT Application No. PCT/US2008/001911 filed 13 Feb 2008 (HHS Reference No. E–020–2007/0–PCT–02).

Licensing Status: Available for licensing.

Licensing Contact: John Stansberry, Ph.D.; 301/435–5236; *stansbej@mail.nih.gov*.

Collaborative Research Opportunity: The Laboratory of Functional and Molecular Imaging (LFMI) at the National Institute of Neurological Disorders and Stroke (NINDS) is seeking statements of capability or interest from parties interested in collaborative research to further develop, evaluate, or commercialize MRI applications that aim to provide novel functional and molecular imaging techniques to study brain structure and function. Please contact Melissa Maderia, Ph.D. at *maderiam@mail.nih.gov* or 301–451–3943 for more information.

Quantifying Gene Relatedness via Nonlinear Prediction of Gene Expression Levels

Description of Technology: This invention relates to a new way to analyze the function of a newly identified gene. Working together, the genes within a genomic system constitute a control system for modulating gene expression activity and protein production. Regulation within this control system depends on multivariate relations among genes. Therefore, a key window into understanding genomic activity is to quantify the manner in which the expression profile among a set of genes can be used to predict the expression levels of other genes. This invention provides the experimental, statistical, and computational basis for nonlinear and linear multivariate prediction and co-determination among gene expression levels, and it is applied in the context of cDNA microarrays. Using these measures of multi-gene interactivity, it is possible to infer genomic regulatory mechanisms and thereby identify the manner in which genetic malfunction contributes to cancer and developmental anomalies.

Inventors: Michael Bittner (NHGRI), Yidong Chen (NHGRI), *et al.*

Patent Status: U.S. Patent No. 7,003,403 issued 21 Feb 2006 (HHS Reference No. E–059–2000/0–US–01).

Licensing Status: Available for licensing.

Licensing Contact: Jeffrey A. James, Ph.D.; 301–435–5474; *jeffreyja@mail.nih.gov*.

Isolated Helicobacter hepaticus

Description of Technology: An isolated bacterium of the genus *Helicobacter,* characterized by the 16S ribosomal RNA encoding nucleotide sequence defined in the Sequence Listing as SEQ ID NO:1 is provided. An isolated nucleic acid having the nucleotide sequence defined in the Sequence Listing as SEQ ID NO:1 is provided. Such a nucleic acid can be used for diagnosis of infection with *H. hepaticus.* A nucleic acid of the present invention in a vector suitable for expression of the nucleic acid is also provided. The vector can be in a host suitable for expressing the nucleic acid. A purified antigen specific for *H. hepaticus* is provided. A method of making an animal model for chronic *Helicobacter* infection is also provided.

Inventors: Jerrold M. Ward *et al.* (NCI).

Patent Status: U.S. Patent 5,610,060 issued 11 Mar 1997 (HHS Reference No. E–010–1994/0–US–01).

Licensing Status: Available for licensing.

Licensing Contact: Jeffrey A. James, Ph.D.; 301–435–5474; *jeffreyja@mail.nih.gov*.

Recombinant Vaccines Based on Poxvirus Vectors

Description of Technology: The technology offered for licensing is foundational in the area of recombinant DNA vaccines. In the last several years, facilitated through a licensing program of the NIH, the technology has been broadly applied in the development and commercialization of several novel human and veterinary vaccines in the areas of infectious disease as well as cancer therapeutics. The NIH wishes to expand its licensing program of the subject technology in a variety of applications that will benefit public health.

Briefly, the technology describes and claims methods of constructing recombinant vaccines utilizing any recombinant poxvirus, and in particular vaccinia virus (*i.e.* Modified Vaccinia Ankara or other strains) as a backbone that carries a foreign DNA. The foreign DNA can be related to a viral pathogen for example, or to a tumor-associated antigen. Upon administration of the recombinant virus to a human or animal subject, the foreign gene is expressed *in vivo* to elicit an immune response against the respective pathogen or the respective tumor.

The technology takes advantage of the unique properties of poxviruses as a delivering vehicle and of the ease of preparation of such constructs.

The applications of this technology have been extensively covered by many publications, including more than 100 publications from the inventor (*see* sampling below). The publications cover a wide variety of vaccines such as HIV, papilloma virus, influenza and others.

Note: Samples of plasmids and vaccinia virus used in the invention are deposited in the American Type Culture Collection and in the NIH and may be available for licensees upon request.

Applications

- Prophylactic and/or therapeutic vaccines.
- Infectious disease and cancer Human and animal vaccines.
- Immunotherapy.
- Protein expression system.

Advantages: Recombinant Poxviruses vectors in DNA vaccines have exhibited some advantages as compared to other viral vectors such as adenovirus, retrovirus or papillomavirus:

- High safety profile.
- Wide host range.
- Ability to accommodate large amounts of foreign DNA including multiple genes.
- No loss of infectivity upon insertion of foreign DNA.
- Unique transcriptional regulatory signals of the virus facilitates flexibility in genome strategy.

In addition, the following properties have been demonstrated:

- Immunization with vaccinia-vectored vaccines provides long-lasting protection.
- Vaccinia virus is very stable and no cold-chain is required in distribution network.
- Induce mucosal immune response.
- Induce humeral and cellular immunity.

Development Status: Fully developed. The technology has been already successfully implemented in commercial veterinary vaccines (*i.e.* rabies) and is in advance clinical trials in several companies in the area of cancer immunotherapy.

Market

- The market for vaccines against infectious diseases is in the multibillion dollars and keeps growing at an annual rate of approximately 40%. This is compared to approximately 8% growth for the overall pharmaceutical companies. Live recombinant vaccines as offered in the subject technology offer an attractive alternative to existing vaccines as well as for future vaccines and therefore may be commercially attractive for vaccine and pharmaceutical companies.
- The market for therapeutic cancer vaccines, which is the subject of this technology, is expected to mirror the growth seen in the monoclonal antibody market and reach sales in excess of $5

billion by 2012 according to some reports.

Overall, the potential commercial opportunity based on the subject technology is immense.

Inventors: Bernard Moss *et al.* (NIAID).

Publications: The inventor, Dr. Bernard Moss, is an author of more than 100 publications in the area covered by the subject patents. The following is just a sampling of his publications in the area:

1. B Moss and PL Earl. Overview of the vaccinia virus expression system. Curr Protoc Mol Biol. 2002 Nov; Chapter 16: Unit16.15.
2. HL Robinson, S Sharma, J Zhao, S Kannanganat, L Lai, L Chennareddi, T Yu, DC Montefiori, RR Amara, LS Wyatt, B Moss. Immunogenicity in macaques of the clinical product for a clade B DNA/MVA HIV vaccine: elicitation of IFN-gamma, IL–2, and TNF-alpha coproducing CD4 and CD8 T cells. AIDS Res Hum Retroviruses. 2007 Dec;23(12):1555–1562.
3. LS Wyatt, PL Earl, J Vogt, LA Eller, D Chandran, J Liu, HL Robinson, B Moss. Correlation of immunogenicities and in vitro expression levels of recombinant modified vaccinia virus Ankara HIV vaccines. Vaccine 2008 Jan 24;26(4):486–493.
4. M Hebben, J Brants, C Birck, JP Samama, B Wasylyk, D Spehner, K Pradeau, A Domi, B Moss, P Schultz, R Drillien. High level protein expression in mammalian cells using a safe viral vector: modified vaccinia virus Ankara. Protein Expr Purif. 2007 Dec;56(2):269–278.

Patent Status: The technology is described and claimed in the following four (4) patents that were issued in the U.S. in 2006 (HHS Reference E–552–1982/2):

1. USPN 6,998,252 issued February 14, 2006, ''Recombinant Poxviruses Having Foreign DNA Expressed under the Control of Poxvirus Regulatory Sequences''.
2. USPN 7,015,024 issued March 21, 2006, ''Compositions Containing Recombinant Poxviruses Having Foreign DNA Expressed Under the Control of Poxvirus Regulatory Sequences''.
3. USPN 7,045,313 issued May 16, 2006, ''Recombinant Vaccinia Virus Containing Chimeric Gene Having Foreign DNA Flanked by Vaccinia Regulatory DNA''.
4. USPN 7,045,136 issued May 16, 2006, ''Methods of Immunization Using Recombinant Poxviruses Having Foreign DNA Expressed Under the Control of Poxvirus Regulatory Sequences''.

Licensing Status: Available for licensing.

Licensing Contacts: Uri Reichman, Ph.D., MBA; 301–435–4616; *ur7a@nih.gov*; RC Tang, JD, LLM; 301–435–5031; *tangrc@mail.nih.gov*.

Dated: August 10, 2009.

Richard U. Rodriguez,

Director, Division of Technology Development and Transfer, Office of Technology Transfer, National Institutes of Health.

[FR Doc. E9–19693 Filed 8–14–09; 8:45 am]

BILLING CODE 4140–01–P

DEPARTMENT OF HEALTH AND HUMAN SERVICES

National Institutes of Health

Government-Owned Inventions; Availability for Licensing

AGENCY: National Institutes of Health, Public Health Service, HHS.

ACTION: Notice.

SUMMARY: The inventions listed below are owned by an agency of the U.S. Government and are available for licensing in the U.S. in accordance with 35 U.S.C. 207 to achieve expeditious commercialization of results of Federally-funded research and development. Foreign patent applications are filed on selected inventions to extend market coverage for companies and may also be available for licensing.

ADDRESSES: Licensing information and copies of the U.S. patent applications listed below may be obtained by writing to the indicated licensing contact at the Office of Technology Transfer, National Institutes of Health, 6011 Executive Boulevard, Suite 325, Rockville, Maryland 20852–3804; telephone: 301/496–7057; fax: 301/402–0220. A signed Confidential Disclosure Agreement will be required to receive copies of the patent applications.

Superior Method of Preparing Dendrimers for Use as Magnetic Resonance Imaging (MRI) Contrast Agents

Description of Technology: There is a need to develop more efficient gadolinium-containing (Gd) contrast agents for magnetic resonance imaging (MRI) as the small molecules presently used clinically have the disadvantage of being rapidly cleared from circulation and excreted by the kidneys.

Dendrimer-based macromolecular MRI contrast agents in which numerous chelated Gd ions are covalently attached to a multivalent dendritic architecture are a promising class of diagnostic agents for medical imaging applications. Clinical development of the dendrimer-based agents has been limited as the current methods for synthesizing them result in a complex mixture that produces inconsistent imaging results.

The present technology describes the development of a new method of pre-forming the metal-ligand chelate in alcohol prior to conjugation to the dendrimer. Specifically, for example, a 1B4M–DTPA–Gd chelate is preformed in methanol and purified prior to conjugation to a PAMAM dendrimer molecule. This results in a dendrimer-based MRI contrast agent with greatly improved homogeneity and stability, and possessing an unexpectedly greater molar relaxivity that allows the use of much less of the agent than previously required to obtain comparable images. The use of a DOTA–Gd chelate is equally possible.

Application: An improved method for synthesis of dendrimer-based MRI contrast agents that is greatly suited for clinical development.

Advantages

- Efficient preparation of stable dendrimer-based contrast agents suitable for medical imaging.
- Higher molar relaxivity translates into a lower dosage needed for imaging.
- Ability to control dendrimer size conducive for development of compartment-specific imaging agents.

Market: Dendrimers show particular promise for the development of cancer imaging agents. The ability to exquisitely control dendrimer size enables delivering them to specific compartments such as small tumors allowing for early cancer detection. Gadolinium (Gd) chelates are extensively used as MRI contrast agents and have proven to be safe. The combination of gadolinium chelates with dendrimer chemistry could greatly enhance the versatility of MRI imaging.

Inventors: Kido Nwe and Martin W. Brechbiel (NCI).

Publications

1. K Nwe, H Xu, CA Regino, M Bernardo, L Ileva, L Riffle, KJ Wong, MW Brechbiel. A new approach in the preparation of dendrimer-based bifunctional diethylenetriaminepentaacetic acid MR contrast agent derivatives. Bioconjugate Chem. 2009 Jul;20(7):1412–1418.
2. OA Gansow, MW Brechbiel, MA Magerstadt. Complexes of functionalized tetraazacyclododecane chelates with bismuth, lead, yttrium, actinium, or lanthanide metal ions. U.S. Patent 5,428,154 issued 27 Jun 1995.

Patent Status: U.S. Provisional Application No. 61/180,327 filed 21 May 2009 (HHS Reference No. E–207–2009/0–US–01).

Related Technology: OA Gansow, MW Brechbiel, MA Magerstadt, ''Complexes of Functionalized Tetraazacyclododecane Chelates with Bismuth, Lead, Yttrium, Actinium, or

Lanthanide Metal Ions,'' U.S. Patent 5,428,154 issued 27 Jun 1995 (HHS Reference No. E–347–1996/0–US–22).

Licensing Status: Available for licensing.

Licensing Contact: Sabarni Chatterjee, Ph.D.; 301–435–5587; *chatterjeesa@mail.nih.gov*.

Collaborative Research Opportunity: The Inorganic & Radioimmune Chemistry Section, ROB, CCR, NCI is seeking statements of capability or interest from parties interested in collaborative research to further develop, evaluate, or commercialize macromolecular (dendrimer-based) MR contrast agents as well as multi-modality analogs. Please contact John D. Hewes, Ph.D. at 301–435–3121 or *hewesj@mail.nih.gov* for more information.

Two Types of Dentin Sialophosphoprotein (DSPP) Knockout Mice

Description of Technology: Two types of dentin sialophosphoprotein knockout mice are available for licensing. The technology relates to two separate knockout mouse models of the role of dentin sialophosphoprotein in dentin mineralization and development of teeth. The first knockout mouse is a knockout of the entire DSPP gene, which results in a phenotype similar to human autosomal dominant dentinogenesis imperfecta, in which teeth have widened predentin and irregular dentin mineralization resulting in sporadic unmineralized areas in dentin and frequent pulp exposures. DSPP protein in odontoblasts is normally proteolytically cleaved into two products, dentin sialoprotein (DSP) and dentin phosphoprotein (DPP). To distinguish the role of the proteolytic fragments, the second knockout mouse (DPPcKO) consists of a transgene expressing the DSP fragment in a DSPP null background. The DPPcKO mouse demonstrates a partial rescue of the DSPP knockout effect and indicates DSP and PPP have distinct roles in dentin development.

Applications

- Tool for studying dentin development.
- Tool for developing treatments for autosomal dominant dentinogenesis imperfecta.

Inventors: Ashok Kulkarni and Shigeki Suzuki (NIDCR)

Related Publications

1. Sreenath T, Thyagarajan T, Hall B, Longenecker G, D'Souza R, Hong S, Wright JT, MacDougall M, Sauk J, Kulkarni AB. Dentin sialophosphoprotein knockout mouse teeth display widened predentin zone and develop defective dentin mineralization similar to human dentinogenesis imperfecta type III. J Biol Chem. 2003 Jul 4;278(27):24874–24880.
2. Suzuki S, Sreenath T, Haruyama N, Honeycutt C, Terse A, Cho A, Kohler T, Muller R, Goldberg M, Kulkarni A. Dentin sialoprotein and dentin phosphoprotein have distinct roles in dentin mineralization. Submitted, 2009.

Patent Status: HHS Reference No. E–201–2009/0—Research Tool. Patent protection is not being pursued for this technology.

Licensing Status: This technology is available as a research tool under a Biological Materials License.

Licensing Contact: Steve Standley, PhD; 301–435–4074; *sstand@od.nih.gov*.

Novel Diagnostic and Therapeutic Biomarkers for Squamous Cell Carcinomas

Description of Technology: Head and neck squamous cell carcinoma (HNSCC) includes tumors of the nasal cavities, paranasal sinuses, oral cavity, nasopharynx, oropharynx, hypopharynx, and larynx. HNSCC is an aggressive cancer with poor prognosis after metastasis. In patients where HNSCC is identified early, prognosis is better and patient survival increases. However, at present, very few if any biomarkers are available to diagnosis HNSCC. The overall 5-year survival rate for patients is only 50% and has not improved in over 30 years. New treatments and diagnostics for early detection are needed to improve patient survival and quality of life for this these types of cancers.

Scientists at the National Institutes of Health (NIH) have discovered that the TGF-β signaling pathway crosstalks with the PI3K/Akt signaling pathway to suppress squamous cell carcinomas (SCCs). When the TGF-β pathway is inactivated and the PI3K pathway becomes hyperactive, HNSCC development is accelerated. Combined mutations in the transforming growth factor-β receptor type 1 (TGFβR1) gene and the phosphate and tensin homolog (PTEN) gene directly correlate with an individual having HNSCC or being increasingly susceptible to HNSCC. When tumor-associated mutations in both biomarkers were induced in animal subjects, spontaneous SCCs were developed in every test subject. Given this high correlation, this technology could be utilized to improve diagnosis of HNSCC at its early stages when the malignancy is most treatable. This technology also includes therapeutic combinations of TGF-β and PI3K/Akt modulators as treatments for HNSCC and methods of treating patients diagnosed with HNSCC.

Applications

- Biomarkers to diagnose patients with HNSCC or predict patients who have a high susceptibility for developing HNSCC.
- Diagnostic tool to identify patients predicted to respond to specific HNSCC therapies as part of a personalized treatment strategy.
- Therapeutic drug combinations of TGF-β pathway modulators and PI3K/Akt inhibitors to treat various head and neck cancers, including nasal, oral, pharyngeal, laryngeal, and cranial tumors.

Advantages

- Complete Penetrance: All test subjects exhibiting mutations in the TGFβR1 and PTEN genes develop HNSCC. A diagnostic kit that includes assays for these mutations is predicted to have high accuracy for identifying HNSCC.
- Earlier diagnosis could yield more effective treatments: This technology could provide for a more accurate and earlier diagnosis of SCCs to revolutionize the treatment of this malignancy. Current SCC therapies may become more effective treatments and new therapies could be developed as better treatment options.
- Diagnostic for HNSCC susceptibility could lead to HNSCC prevention: This technology could identify patients predisposed to developing HNSCC in order to help prevent individuals from developing head and neck cancer.

Development Status: This technology is in the pre-clinical stage of development. *In vivo* and *in vitro* mouse data is available.

Market: Cancer continues to be a medical and financial burden on U.S. public health. The incidence of HNSCC is over 500,000 cases worldwide and approximately 47,000 new cases are diagnosed each year in the United States. Despite our increasing knowledge of cancer treatment and diagnosis methods, the fight against cancer will continue to benefit from the development of new technologies aimed at treating individuals with disease and diagnosing susceptible patients.

Inventors: Ashok B. Kulkarni and Yansong Bian (NIDCR).

Publications

1. Y Bian *et al.* Progressive tumor formation in mice with conditional deletion of TGF-β signaling in head and neck epithelia is associated with activation of the PI3k/Akt Pathway. Manuscript in preparation (accepted).

2. Y Honjo *et al.* TGF-beta receptor I conditional knockout mice develop spontaneous squamous cell carcinoma. Cell Cycle 2007 Jun 1:6(11):1360–1366.

Patent Status: U.S. Provisional Application No. 61/176,723 filed 08 May 2009 (HHS Reference No. E–118–2009/0–US–01).

Licensing Status: Available for licensing.

Licensing Contact: Samuel E. Bish, Ph.D.; 301–435–5282; *bishse@mail.nih.gov*.

Antigen Mixtures for Serological Detection of HHV–8 Infection

Description of Technology: This invention describes a highly specific and sensitive serological test for human herpesvirus 8 (HHV–8) infection that uses the Luciferase Immunoprecipitation System (LIPS). A mixture of four virus-specific antigens, including K8.1, v-cyclin, ORF65 and LANA, was shown to provide more robust detection of HHV–8 infection than traditional methods due its ability to detect very low viral loads. In addition, one of the antigens, v-cyclin, was identified as a new serological marker for HHV–8 infection, and its similarity to a known human oncogene, cyclin-D, raises the possibility of its use as a diagnostic tool for detecting cancer.

This test is more sensitive and amenable to a high-throughput format than other conventional tests for HHV–8 infection such as Immunofluorescent Assays, Western Blots, ELISAs and PCR based approaches. It simplifies data collection and analysis and allows for more rapid clinical output. Validation tests on patient sera samples using this 4-antigen mixture has shown 100% sensitivity and specificity compared to 94% for ELISAs.

The test can be incorporated into routine screening panels for rapid screening of HHV–8 infection, and may be potentially adapted for use as a diagnostic tool for detecting cancer. A successful embodiment of the test can be incorporated into routine blood screening panels, and may lead a reduced risk of transfusion-transmitted HHV–8 infection in patients. It may also be useful for detecting HHV–8 induced cancer in HIV infected patients.

Applications

- Rapid and efficient serological screening of HHV–8 infection.
- Cancer diagnostics.

Development Status: Early Stage.

Inventors: Peter D. Burbelo (NIDCR), Joseph A. Kovacs (CC), Michael J. Iadarola (NIDCR).

Publication: PD Burbelo, HP Leahy, S Groot, LR Bishop, W Miley, MJ Iadarola, D Whitby, JA Kovacs. Four-antigen mixture containing v-cyclin for serological screening of human herpesvirus 8 infection. Clin Vaccine Immunol. 2009 May;16(5):621–627.

Patent Status: U.S. Patent Application No. 61/152,058 filed 12 Feb 2009 (HHS Reference No. E–063–2009/0–US–01).

Licensing Status: Available for licensing.

Licensing Contact: Jeffrey A. James, PhD; 301–435–5474; *jeffreyja@mail.nih.gov*.

Oligo Microarray for Detection of All Known Mammalian and Avian Pathogenic Viruses

Description of Technology: The spectrum of pathogenic viruses of importance in human disease, agriculture and biology is not only large and diverse, but continually evolving. The identification or isolation of viral pathogens, in correlation with the presence of specific disease phenotypes, is of paramount importance both to diagnosis of disease and the subsequent management or treatment of viral infection. The limitations of current viral detection methods, such as PCR and immunoassays, led to the development of a novel microarray system for specific detection of viruses. The technology offered here for licensing provides a method for high-throughput screening of known pathogenic viruses along with identification of ''new'' disease-associated viruses.

The novel method is based on a viral microarray containing 10,000 immobilized DNA oligonucleotide features, representing all known mammalian and avian pathogenic viruses (approximately 600). Software was also developed to analyze the viral microarray results. The oligonucleotide features in this system are 60-mer long and distributed across both conserved and non-conserved regions of known viral sequences. This design serves the dual purpose of: (1) Facilitating validation via redundant signals associated with each represented virus and (2) allowing for the discovery of new viruses, which arise due to recombination. In addition, positive and negative controls against human and mouse housekeeping genes are included along with software for analysis of virus microarray results.

Further advantages of the viral microarray include: (a) The use of sample inputs as little as 10ng of either total DNA or RNA extracted from virus infected cells, representing as few as 20 viral particles; (b) detection of viruses of both DNA and RNA classes; (c) a capacity for high-throughput screening of various sample types including serum, saliva and biopsy tissues; and (d) analysis of a large number of samples in parallel on identical arrays.

The detection of viral DNA is unique to this technology, as other available technologies only detect viral genomic RNA or viral mRNA transcripts. Additionally, the viral chip was found to be highly specific and sensitive for detecting different viral genomic sequences in cell lines and multiple viral constructs co-infection in cultured cells.

Applications

- Detection and identification of viruses that cause disease.
- Efficient discovery of new pathogenic viruses.
- Diagnosis of human and animal disease outbreaks.
- Identification of viral agents used in bioterrorism.

Development Status

- The pre-clinical performance of the viral microarray was evaluated by application of four virally positive infected cell lines (JSC–1-harboring EBV and KSHV, BCBL–1 harboring KSHV, HeLa- harboring HPV18, Cem X 174 harboring SIV).
- Clinical performance was tested and validated through analysis of total RNA from cold (swab), Japanese Encephalitis, Dengue, Ebola and West Nile virus samples.

Inventors: Cassio S Baptista and David J Munroe (NCI).

Patent Status: U.S. Patent Application No. 11/800,080 filed 02 May 2007 (HHS Reference No. E–206–2006/0–US–03).

Licensing Status: Available for licensing.

Licensing Contact: Jeffrey A. James Ph.D.; 301–435–5474; *jeffreyja@mail.nih.gov*.

Collaborative Research Opportunity: The NCI Laboratory of Molecular Technology is seeking statements of capability or interest from parties interested in collaborative research to further develop, evaluate, or commercialize this oligo microarray for identification and detection of all known mammalian and avian pathogenic viruses. Please contact John D. Hewes, PhD at 301–435–3121 or *hewesj@mail.nih.gov* for more information.

Dated: August 10, 2009.

Richard U. Rodriguez,

Director, Division of Technology Development and Transfer, Office of Technology Transfer, National Institutes of Health.

[FR Doc. E9–19691 Filed 8–14–09; 8:45 am]

BILLING CODE 4140–01–P

DEPARTMENT OF HEALTH AND HUMAN SERVICES

National Institutes of Health

Notice of Meeting: Secretary's Advisory Committee on Genetics, Health, and Society

Pursuant to Public Law 92–463, notice is hereby given of the twentieth meeting of the Secretary's Advisory Committee on Genetics, Health, and Society (SACGHS), U.S. Public Health Service. The meeting will be held from 8:30 a.m. to approximately 6 p.m. on Thursday, October 8, 2009, and from 8 a.m. to approximately 3:30 p.m. on Friday, October 9, 2009, at the Hubert H. Humphrey Building, 200 Independence Avenue, SW., Washington, DC 20201. The meeting will be open to the public with attendance limited to space available. The meeting also will be Web cast.

The main agenda items involve the review of three SACGHS draft reports: a final draft report and its recommendations on gene patents and licensing practices along with comments received on the public consultation draft circulated earlier this year; a public consultation draft report on genetics education and training; and a revised draft paper on direct-to-consumer genetic testing. The first day of the meeting will include an extended period of time for interested members of the public to provide their perspectives on gene patents and licensing practices and their effect on patient access to genetic tests. Members of the public are encouraged to contact the SACGHS Executive Secretary (see below) by September 15, 2009, if they wish to participate in this extended public comment period. Other agenda items include an update on regulations implementing the Genetic Information Nondiscrimination Act, a report on activities of the Clinical Utility and Comparative Effectiveness Task Force, and a brief discussion to initiate the Committee's work on ethical issues related to genomic data sharing.

As always, the Committee welcomes hearing from anyone wishing to provide public comment on any issue related to genetics, health and society. Individuals who would like to provide public comment should notify the SACGHS Executive Secretary, Ms. Sarah Carr, by telephone at 301–496–9838 or e-mail at *carrs@od.nih.gov*. The SACGHS office is located at 6705 Rockledge Drive, Suite 750, Bethesda, MD 20892. Anyone planning to attend the meeting who needs special assistance, such as sign language interpretation or other reasonable accommodations, is also asked to contact the Executive Secretary.

Under authority of 42 U.S.C. 217a, Section 222 of the Public Health Service Act, as amended, the Department of Health and Human Services established SACGHS to serve as a public forum for deliberations on the broad range of human health and societal issues raised by the development and use of genetic and genomic technologies and, as warranted, to provide advice on these issues. The draft meeting agenda and other information about SACGHS, including information about access to the Web cast, will be available at the following Web site: *http://oba.od.nih.gov/SACGHS/sacghs_meetings.html*.

Dated: August 10, 2009.

Jennifer Spaeth,

Director, NIH Office of Federal Advisory Committee Policy.

[FR Doc. E9–19583 Filed 8–14–09; 8:45 am]

BILLING CODE 4140–01–P

DEPARTMENT OF HEALTH AND HUMAN SERVICES

National Institutes of Health

National Institute of Neurological Disorders and Stroke; Notice of Meeting

Pursuant to section 10(d) of the Federal Advisory Committee Act, as amended (5 U.S.C. App.), notice is hereby given of a meeting of the National Advisory Neurological Disorders and Stroke Council.

The meeting will be open to the public as indicated below, with attendance limited to space available. Individuals who plan to attend and need special assistance, such as sign language interpretation or other reasonable accommodations, should notify the Contact Person listed below in advance of the meeting.

The meeting will be closed to the public in accordance with the provisions set forth in sections 552b(c)(4) and 552b(c)(6), Title 5 U.S.C., as amended. The grant applications and the discussions could disclose confidential trade secrets or commercial property such as patentable material, and personal information concerning individuals associated with the grant applications, the disclosure of which would constitute a clearly unwarranted invasion of personal privacy.

Name of Committee: National Advisory Neurological Disorders and Stroke Council.

Date: September 17–18, 2009.

Open: September 17, 2009, 10:30 a.m. to 5:00 p.m.

Agenda: Report by the Director, NINDS; Report by the Associate Director for Extramural Research and other Administrative and Program Developments.

Place: National Institutes of Health, Building 31, 31 Center Drive, C Wing, Conference Room 10, Bethesda, MD 20892.

Closed: September 18, 2009, 8 a.m. to 11:30 a.m.

Agenda: To review and evaluate grant applications.

Place: National Institutes of Health, Building 31, 31 Center Drive, C Wing, Conference Room 10, Bethesda, MD 20892.

Contact Person: Robert Finkelstein, PhD, Associate Director for Extramural Research, National Institute of Neurological Disorders and Stroke, NIH, 6001 Executive Blvd., Suite 3309, MSC 9531, Bethesda, MD 20892, (301) 496–9248.

Any interested person may file written comments with the committee by forwarding the statement to the Contact Person listed on this notice. The statement should include the name, address, telephone number and when applicable, the business or professional affiliation of the interested person.

In the interest of security, NIH has instituted stringent procedures for entrance onto the NIH campus. All visitor vehicles, including taxicabs, hotel, and airport shuttles will be inspected before being allowed on campus. Visitors will be asked to show one form of identification (for example, a government-issued photo ID, driver's license, or passport) and to state the purpose of their visit.

Information is also available on the Institute's/Center's home page: *http://www.ninds.nih.gov,* where an agenda and any additional information for the meeting will be posted when available.

(Catalogue of Federal Domestic Assistance Program Nos. 93.853, Clinical Research Related to Neurological Disorders; 93.854, Biological Basis Research in the Neurosciences, National Institutes of Health, HHS)

Dated: August 10, 2009.

Jennifer Spaeth,

Director, Office of Federal Advisory Committee Policy.

[FR Doc. E9–19578 Filed 8–14–09; 8:45 am]

BILLING CODE 4140–01–P

DEPARTMENT OF HEALTH AND HUMAN SERVICES

Centers for Disease Control and Prevention

Subcommittee for Dose Reconstruction Reviews (SDRR), Advisory Board on Radiation and Worker Health (ABRWH), National Institute for Occupational Safety and Health (NIOSH)

In accordance with section 10(a)(2) of the Federal Advisory Committee Act (Pub. L. 92–463), the Centers for Disease

Control and Prevention, announces the following meeting for the aforementioned subcommittee:

Time and Date: 10 a.m.–5 p.m., September 3, 2009.

Place: Cincinnati Airport Marriott, 2395 Progress Drive, Hebron, Kentucky 41018. Telephone (859) 334–4611, Fax (859) 334–4619.

Status: Open to the public, but without a public comment period. To access by conference call dial the following information 1(866) 659–0537, Participant Pass Code 9933701.

Background: The Advisory Board was established under the Energy Employees Occupational Illness Compensation Program Act of 2000 to advise the President on a variety of policy and technical functions required to implement and effectively manage the new compensation program. Key functions of the Advisory Board include providing advice on the development of probability of causation guidelines that have been promulgated by the Department of Health and Human Services (HHS) as a final rule; advice on methods of dose reconstruction which have also been promulgated by HHS as a final rule; advice on the scientific validity and quality of dose estimation and reconstruction efforts being performed for purposes of the compensation program; and advice on petitions to add classes of workers to the Special Exposure Cohort (SEC).

In December 2000, the President delegated responsibility for funding, staffing, and operating the Advisory Board to HHS, which subsequently delegated this authority to CDC. NIOSH implements this responsibility for CDC. The charter was issued on August 3, 2001, renewed at appropriate intervals, and will expire on August 3, 2011.

Purpose: The Advisory Board is charged with (a) providing advice to the Secretary, HHS, on the development of guidelines under Executive Order 13179; (b) providing advice to the Secretary, HHS, on the scientific validity and quality of dose reconstruction efforts performed for this program; and (c) upon request by the Secretary, HHS, advise the Secretary on whether there is a class of employees at any Department of Energy facility who were exposed to radiation but for whom it is not feasible to estimate their radiation dose, and on whether there is reasonable likelihood that such radiation doses may have endangered the health of members of this class. The Subcommittee for Dose Reconstruction Reviews was established to aid the Advisory Board in carrying out its duty to advise the Secretary, HHS, on dose reconstruction.

Matters To Be Discussed: The agenda for the Subcommittee meeting includes: Discussion of dose reconstruction cases under review; OCAS dose reconstruction quality management and assurance activities; selection of an additional set of cases for review.

In the event an individual cannot attend, written comments may be submitted. Any written comments received will be provided at the meeting and should be submitted to the contact person below well in advance of the meeting.

For More Information Contact: Theodore Katz, Executive Secretary, NIOSH, CDC, 1600 Clifton Road, Mailstop E–20, Atlanta GA 30333, Telephone (513) 533–6800, Toll Free 1(800) CDC–INFO, E-mail *ocas@cdc.gov*.

The Director, Management Analysis and Services Office, has been delegated the authority to sign **Federal Register** notices pertaining to announcements of meetings and other committee management activities, for both CDC and the Agency for Toxic Substances and Disease Registry.

Dated: August 10, 2009.

Elaine L. Baker,

Director, Management Analysis and Services Office, Centers for Disease Control and Prevention.

[FR Doc. E9–19701 Filed 8–14–09; 8:45 am]

BILLING CODE 4163–18–P

DEPARTMENT OF HEALTH AND HUMAN SERVICES

Centers for Disease Control and Prevention

Advisory Committee to the Director, Centers for Disease Control and Prevention (ACD, CDC)

In accordance with section 10(a)(2) of the Federal Advisory Committee Act (Pub. L. 92–463), the Centers for Disease Control and Prevention (CDC) announces the following Meeting of the aforementioned committee:

Time and Date: 4:30 p.m.–6 p.m., September 1, 2009.

Place: The teleconference call will originate at the Centers for Disease Control and Prevention in Atlanta, Georgia. *Please see Supplementary Information* for details on accessing the teleconference.

Status: Open to the public, teleconference access limited only by availability of telephone ports.

Purpose: The committee will provide advice to the CDC Director on strategic and other broad issues facing CDC.

Matters To Be Discussed: The committee will discuss and decide on recommendations from its Ethics Subcommittee, National Biosurveillance Advisory Subcommittee, and the Health Disparities Subcommittee. The Ethics Subcommittee will make recommendations on using travel restrictions for individuals with infectious illnesses; and discuss a draft charge that clearly articulates the ethical foundation for focusing on health protection activities and examining the social determinants of health. The National Biosurveillance Advisory Subcommittee will present their final report on biosurveillance recommendations. The Health Disparities Subcommittee will present their mission. The ACD, CDC will also receive an update on H1N1 and the plans for the upcoming flu season.

Agenda items are subject to change as priorities dictate.

Supplementary Information: This conference call is scheduled to begin at 4:30 p.m. To participate in the teleconference, please dial 1–800–593–9961 and enter conference code 3699611. You will then be automatically connected to the call.

Contact Person for More Information: Anne Haddix, M.D., Designated Federal Officer, Advisory Committee to the Director, CDC, 1600 Clifton Road, NE., M/S D–14, Atlanta, Georgia 30333. Telephone 404–639–0663.

The Director, Management Analysis and Services office has been delegated the authority to sign **Federal Register** notices pertaining to announcements of meetings and other committee management activities for both the Centers for Disease Control and Prevention and the Agency for Toxic Substances and Disease Registry.

Dated: August 10, 2009.

Elaine L. Baker,

Director, Management Analysis and Services Office, Centers for Disease Control and Prevention (CDC).

[FR Doc. E9–19698 Filed 8–14–09; 8:45 am]

BILLING CODE 4163–18–P

DEPARTMENT OF HEALTH AND HUMAN SERVICES

National Institutes of Health

National Center on Minority Health and Health Disparities; Notice of Meeting

Pursuant to section 10(d) of the Federal Advisory Committee Act, as amended (5 U.S.C. App.), notice is hereby given of a meeting of the National Advisory Council on Minority Health and Health Disparities.

The meeting will be open to the public as indicated below, with attendance limited to space available. Individuals who plan to attend and need special assistance, such as sign language interpretation or other reasonable accommodations, should notify the Contact Person listed below in advance of the meeting.

The meeting will be closed to the public in accordance with the provisions set forth in sections 552b(c)(4) and 552b(c)(6), Title 5 U.S.C., as amended. The grant applications and/or contract proposals and the discussions could disclose confidential trade secrets or commercial property such as patentable material, and personal information concerning individuals associated with the grant applications and/or contract proposals, the disclosure of which would constitute a clearly unwarranted invasion of personal privacy.

Name of Committee: National Advisory Council on Minority Health and Health Disparities; NACMHD

Date: September 8, 2009

Closed: 8 a.m. to 10 a.m.

Agenda: To review and evaluate grant applications and/or proposals

Place: Bethesda Marriott Suites, 6711 Democracy Boulevard, Bethesda, MD 20817

Open: 10:00 a.m. to 5:00 p.m.

Agenda: The agenda will include opening remarks, administrative matters, Director's Report, NCMHD Health Disparities update, Scientific Programs Highlight, and other business of the Council.

Place: Bethesda Marriott Suites, 6711 Democracy Boulevard, Bethesda, MD 20817

Contact Person: Donna Brooks, Asst. Director for Administration, National Center on Minority Health and Health Disparities, National Institutes of Health, 6707 Democracy Blvd., Suite 800, Bethesda, MD 20892, 301–435–2135, *brooksd@ncmhd.nih.gov*.

This meeting is being published less than 15 days prior to the meeting due to the timing limitations imposed by the review and funding cycle.

Any member of the public interested in presenting oral comments to the committee may notify the Contact Person listed on this notice at least 10 days in advance of the meeting. Interested individuals and representatives of organizations may submit a letter of intent, a brief description of the organization represented, and a short description of the oral presentation. Only one representative of an organization may be allowed to present oral comments and if accepted by the committee, presentations may be limited to five minutes. Both printed and electronic copies are requested for the record. In addition, any interested person may file written comments with the committee by forwarding their statement to the Contact Person listed on this notice. The statement should include the name, address, telephone number and when applicable, the business or professional affiliation of the interested person.

Dated: August 11, 2009.

Jennifer Spaeth,

Director, Office of Federal Advisory Committee Policy.

[FR Doc. E9–19690 Filed 8–14–09; 8:45 am]

BILLING CODE 4140–01–P

DEPARTMENT OF HEALTH AND HUMAN SERVICES

National Institutes of Health

National Center for Research Resources; Notice of Closed Meetings

Pursuant to section 10(d) of the Federal Advisory Committee Act, as amended (5 U.S.C. App.), notice is hereby given of the following meetings.

The meetings will be closed to the public in accordance with the provisions set forth in sections 552b(c)(4) and 552b(c)(6), Title 5 U.S.C., as amended. The grant applications and the discussions could disclose confidential trade secrets or commercial property such as patentable material, and personal information concerning individuals associated with the grant applications, the disclosure of which would constitute a clearly unwarranted invasion of personal privacy.

Name of Committee: National Center for Research Resources Special Emphasis Panel; ARRA STRB September Meeting 1.

Date: September 8–11, 2009.

Time: 8 a.m. to 5 p.m.

Agenda: To review and evaluate grant applications.

Place: National Institutes of Health, One Democracy Plaza, 6701 Democracy Boulevard, Bethesda, MD 20892. (Virtual Meeting).

Contact Person: Mohan Viswanathan, PhD, Scientific Review Officer, National Center for Research Resources, National Institutes of Health, One Democracy Plaza, 6701 Democracy Blvd., Room 1084, Bethesda, MD 20892–4874. 301–435–0829. *mv10f@nih.gov*.

Name of Committee: National Center for Research Resources Special Emphasis Panel; ARRA STRB September Meeting 2.

Date: September 8–11, 2009.

Time: 8 a.m. to 5 p.m.

Agenda: To review and evaluate grant applications.

Place: National Institutes of Health, One Democracy Plaza, 6701 Democracy Boulevard, Bethesda, MD 20892 (Virtual Meeting).

Contact Person: Mohan Viswanathan, PhD, Scientific Review Officer, National Center for Research Resources, National Institutes of Health, One Democracy Plaza, 6701 Democracy Blvd., Room 1084, Bethesda, MD 20892–4874. 301–435–0829. *Mv10f@nih.gov*.

Name of Committee: National Center for Research Resources Special Emphasis Panel; ARRA STRB September Meeting 3.

Date: September 8–11, 2009.

Time: 8 a.m. to 5 p.m.

Agenda: To review and evaluate grant applications.

Place: National Institutes of Health, One Democracy Plaza, 6701 Democracy Boulevard, Bethesda, MD 20892 (Virtual Meeting).

Contact Person: Carol Lambert, PhD, Scientific Review Officer, Office of Review, National Institutes of Health, NCRR, 6701 Democracy Blvd., 1 Democracy Plaza, Room 1076, MSC 4874, Bethesda, MD 20892. (301) 435–0814. *lambert@mail.nih.gov*.

Name of Committee: National Center for Research Resources Special Emphasis Panel; ARRA STRB September Meeting 4.

Date: September 8–11, 2009.

Time: 8 a.m. to 5 p.m.

Agenda: To review and evaluate grant applications.

Place: National Institutes of Health, One Democracy Plaza, 6701 Democracy Boulevard, Bethesda, MD 20892 (Virtual Meeting).

Contact Person: Carol Lambert, PhD, Scientific Review Officer, Office of Review, National Institutes of Health, NCRR, 6701 Democracy Blvd., 1 Democracy Plaza, Room 1076, MSC 4874, Bethesda, MD 20892. (301) 435–0814. *lambert@mail.nih.gov*.

Name of Committee: National Center for Research Resources Special Emphasis Panel; Comparative Medicine SEP.

Date: September 22, 2009.

Time: 12 p.m. to 2:30 p.m.

Agenda: To review and evaluate grant applications.

Place: National Institutes of Health, One Democracy Plaza, 6701 Democracy Boulevard, Bethesda, MD 20892 (Telephone Conference Call).

Contact Person: Lisa A Newman, SCD, Scientific Review Officer, National Institutes of Health, National Center for Research Resources, Office of Review, Room 1074, 6701 Democracry Blvd. MSC 4874, Bethesda, MD 20892. 301–435–0965. *newmanla2@mail.nih.gov*.

(Catalogue of Federal Domestic Assistance Program Nos. 93.306, Comparative Medicine; 93.333, Clinical Research; 93.371, Biomedical Technology; 93.389, Research Infrastructure, 93.306, 93.333; 93.702, ARRA Related Construction Awards., National Institutes of Health, HHS)

Dated: August 11, 2009.

Jennifer Spaeth,

Director, Office of Federal Advisory Committee Policy.

[FR Doc. E9–19689 Filed 8–14–09; 8:45 am]

BILLING CODE 4140–01–P

DEPARTMENT OF HEALTH AND HUMAN SERVICES

National Institutes of Health

National Institute of Allergy and Infectious Diseases; Notice of Closed Meetings

Pursuant to section 10(d) of the Federal Advisory Committee Act, as amended (5 U.S.C. App.), notice is hereby given of the following meetings.

The meetings will be closed to the public in accordance with the provisions set forth in sections 552b(c)(4) and 552b(c)(6), Title 5 U.S.C., as amended. The grant applications and the discussions could disclose confidential trade secrets or commercial property such as patentable material, and personal information concerning individuals associated with the grant applications, the disclosure of which would constitute a clearly unwarranted invasion of personal privacy.

Name of Committee: National Institute of Allergy and Infectious Diseases Special Emphasis Panel; ''Bacterial Immunity''.

Date: September 8, 2009.

Time: 12:30 p.m. to 4:30 p.m.

Agenda: To review and evaluate grant applications.

Place: National Institutes of Health, Rockledge 6700, 6700B Rockledge Drive, Bethesda, MD 20817 (Telephone Conference Call)

Contact Person: Annie Walker-Abbey, PhD, Scientific Review Officer, Scientific Review Program, NIAID/NIH/DHHS, 6700B Rockledge Drive, RM 3266, MSC–7616, Bethesda, MD 20892–7616, 301–451–2671, *aabbey@niaid.nih.gov*.

Name of Committee: National Institute of Allergy and Infectious Diseases Special Emphasis Panel; Immune Protection to Highly Lethal Pathogens by CD45 Modulation.

Date: September 9, 2009.

Time: 12 p.m. to 4 p.m.

Agenda: To review and evaluate grant applications.

Place: National Institutes of Health, Rockledge 6700, 6700B Rockledge Drive, Bethesda, MD 20817 (Telephone Conference Call).

Contact Person: Raymond Richard Schleef, PhD, Scientific Review Officer, Scientific Review Program, Division of Extramural Activities, National Institutes of Health/NIAID, 6700B Rockledge Drive, MSC 7616, Bethesda, MD 20892–7616, 301–451–3679, *schleefrr@niaid.nih.gov.*

(Catalogue of Federal Domestic Assistance Program Nos. 93.855, Allergy, Immunology, and Transplantation Research; 93.856, Microbiology and Infectious Diseases Research, National Institutes of Health, HHS)

Dated: August 11, 2009.

Jennifer Spaeth,

Director, Office of Federal Advisory Committee Policy.

[FR Doc. E9–19687 Filed 8–14–09; 8:45 am]

BILLING CODE 4140–01–P

DEPARTMENT OF HEALTH AND HUMAN SERVICES

National Institutes of Health

National Institute of Dental & Craniofacial Research; Notice of Closed Meeting

Pursuant to section 10(d) of the Federal Advisory Committee Act, as amended (5 U.S.C. App.), notice is hereby given of a meeting of the National Advisory Dental and Craniofacial Research Council.

The meeting will be closed to the public in accordance with the provisions set forth in sections 552b(c)(4) and 552b(c)(6), Title 5 U.S.C., as amended. The grant applications and the discussions could disclose confidential trade secrets or commercial property such as patentable material, and personal information concerning individuals associated with the grant applications, the disclosure of which would constitute a clearly unwarranted invasion of personal privacy.

Name of Committee: National Advisory Dental and Craniofacial Research Council.

Date: August 31, 2009.

Time: 12 p.m. to 1 p.m.

Agenda: To review and evaluate grant applications and/or proposals.

Place: National Institutes of Health, Building 31, 31 Center Drive, Bethesda, MD 20892 (Telephone Conference Call).

Contact Person: Alicia J. Dombroski, PhD, Director, Division of Extramural Activities, Natl Inst of Dental and Craniofacial Research, National Institutes of Health, Bethesda, MD 20892.

This notice is being published less than 15 days prior to the meeting due to the timing limitations imposed by the review and funding cycle.

Information is also available on the Institute's/Center's home page: *http://www.nidcr.nih.gov/about,* where an agenda and any additional information for the meeting will be posted when available.

(Catalogue of Federal Domestic Assistance Program Nos. 93.121, Oral Diseases and Disorders Research, National Institutes of Health, HHS)

Dated: August 11, 2009.

Jennifer Spaeth,

Director, Office of Federal Advisory Committee Policy.

[FR Doc. E9–19686 Filed 8–14–09; 8:45 am]

BILLING CODE 4140–01–P

DEPARTMENT OF HEALTH AND HUMAN SERVICES

Food and Drug Administration

[Docket No. FDA–2009–N–0664]

Vaccines and Related Biological Products Advisory Committee; Notice of Meeting

AGENCY: Food and Drug Administration, HHS.

ACTION: Notice.

This notice announces a forthcoming meeting of a public advisory committee of the Food and Drug Administration (FDA). The meeting will be open to the public.

Name of Committee: Vaccines and Related Biological Products Advisory Committee.

General Function of the Committee: To provide advice and recommendations to the agency on FDA's regulatory issues.

Date and Time: The meeting will be held on September 9, 2009, from 8 a.m. to approximately 5 p.m.

Location: Hilton Hotel, Washington DC North/Gaithersburg, 620 Perry Pkwy., Gaithersburg, MD 20877.

Contact Person: Christine Walsh or Denise Royster, Center for Biologics Evaluation and Research (HFM–71), Food and Drug Administration, 1401 Rockville Pike, Rockville, MD 20852, 301–827–0314, or FDA Advisory Committee Information Line, 1–800–741–8138 (301–443–0572 in the Washington, DC area), code 3014512391. Please call the Information Line for up-to-date information on this meeting. A notice in the **Federal Register** about last minute modifications that impact a previously announced advisory committee meeting cannot always be published quickly enough to provide timely notice. Therefore, you should always check the agency's Web site and call the appropriate advisory committee hot line/phone line to learn about possible modifications before coming to the meeting.

Agenda: On September 9, 2009, in the morning, the committee will discuss and make recommendations on the safety and effectiveness in females of a vaccine manufactured by GlaxoSmithKline against Human Papillomavirus. In the afternoon, the committee will discuss and make recommendations on the safety and effectiveness of vaccinating males with Gardasil, a vaccine manufactured by Merck & Co. against Human Papillomavirus.

FDA intends to make background material available to the public no later than 2 business days before the meeting. If FDA is unable to post the background material on its Web site prior to the meeting, the background material will be made publicly available at the location of the advisory committee meeting, and the background material will be posted on FDA's Web site after the meeting. Background material is available at *http://www.fda.gov/AdvisoryCommittees/Calendar/default.htm*. Scroll down to the appropriate advisory committee link.

Procedure: Interested persons may present data, information, or views, orally or in writing, on issues pending before the committee. Written submissions may be made to the contact person on or before September 4, 2009. Oral presentations from the public will be scheduled between approximately 11:30 a.m. and 12 noon and between approximately 3:40 p.m. and 4:10 p.m. Those desiring to make formal oral presentations should notify the contact person and submit a brief statement of the general nature of the evidence or arguments they wish to present, the names and addresses of proposed participants, and an indication of the approximate time requested to make their presentation on or before August 27, 2009. Time allotted for each presentation may be limited. If the number of registrants requesting to speak is greater than can be reasonably accommodated during the scheduled open public hearing session, FDA may conduct a lottery to determine the speakers for the scheduled open public hearing session. The contact person will notify interested persons regarding their request to speak by September 3, 2009.

Persons attending FDA's advisory committee meetings are advised that the

agency is not responsible for providing access to electrical outlets.

FDA welcomes the attendance of the public at its advisory committee meetings and will make every effort to accommodate persons with physical disabilities or special needs. If you require special accommodations due to a disability, please contact Christine Walsh or Denise Royster at least 7 days in advance of the meeting.

FDA is committed to the orderly conduct of its advisory committee meetings. Please visit our Web site at *http://www.fda.gov/AdvisoryCommittees/AboutAdvisoryCommittees/ucm111462.htm* for procedures on public conduct during advisory committee meetings.

Notice of this meeting is given under the Federal Advisory Committee Act (5 U.S.C. app. 2).

Dated: August 11, 2009.

Randall W. Lutter,

Deputy Commissioner for Policy.

[FR Doc. E9–19639 Filed 8–14–09; 8:45 am]

BILLING CODE 4160–01–S

DEPARTMENT OF HEALTH AND HUMAN SERVICES

National Institutes of Health

National Heart, Lung, and Blood Institute; Notice of Closed Meetings

Pursuant to section 10(d) of the Federal Advisory Committee Act, as amended (5 U.S.C. App.), notice is hereby given of meetings of the National Heart, Lung, and Blood Advisory Council.

The meetings will be closed to the public in accordance with the provisions set forth in sections 552b(c)(4) and 552b(c)(6), Title 5 U.S.C., as amended. The grant applications and the discussions could disclose confidential trade secrets or commercial property such as patentable material, and personal information concerning individuals associated with the grant applications, the disclosure of which would constitute a clearly unwarranted invasion of personal privacy.

Name of Committee: National Heart, Lung, and Blood Advisory Council.

Date: September 1, 2009.

Time: 1 p.m. to 4 p.m.

Agenda: To review and evaluate grant applications.

Place: National Institutes of Health, Building 31, 31 Center Drive, C-Wing, Room 10, Bethesda, MD 20892 (Telephone Conference Call).

Contact Person: Stephen C. Mockrin, PhD, Director, Division of Extramural Research Activities, National Heart, Lung, and Blood Institute, National Institutes of Health, 6701 Rockledge Drive, Room 7100, Bethesda, MD 20892, (301) 435–0260, *mockrins@nhlbi.nih.gov*.

Name of Committee: National Heart, Lung, and Blood Advisory Council.

Date: September 15, 2009.

Time: 1 p.m. to 4 p.m.

Agenda: To review and evaluate grant applications.

Place: National Institutes of Health, Building 31, 31 Center Drive, A-Wing, Room 5A05, Bethesda, MD 20892 (Telephone Conference Call).

Contact Person: Stephen C. Mockrin, PhD, Director, Division of Extramural Research Activities, National Heart, Lung, and Blood Institute, National Institutes of Health, 6701 Rockledge Drive, Room 7100, Bethesda, MD 20892, (301) 435–0260, *mockrins@nhlbi.nih.gov*.

Information is also available on the Institute's/Center's home page: *http://www.nhlbi.nih.gov/meetings/index.htm,* where an agenda and any additional information for the meeting will be posted when available.

(Catalogue of Federal Domestic Assistance Program Nos. 93.233, National Center for Sleep Disorders Research; 93.837, Heart and Vascular Diseases Research; 93.838, Lung Diseases Research; 93.839, Blood Diseases and Resources Research; 93.701, ARRA Related Biomedical Research and Research Support Awards, National Institutes of Health, HHS)

Dated: August 10, 2009.

Jennifer Spaeth,

Director, Office of Federal Advisory Committee Policy.

[FR Doc. E9–19577 Filed 8–14–09; 8:45 am]

BILLING CODE 4140–01–P

DEPARTMENT OF HEALTH AND HUMAN SERVICES

Centers for Disease Control and Prevention (CDC)

Advisory Board on Radiation and Worker Health (ABRWH or Advisory Board), National Institute for Occupational Safety and Health (NIOSH)

In accordance with section 10(a)(2) of the Federal Advisory Committee Act (Pub. L. 92–463), the Centers for Disease Control and Prevention announces the following committee meeting:

Time and Date: 11 a.m.–2 p.m., Tuesday, September 8, 2009.

Place: Audio Conference Call via FTS Conferencing. The USA toll free dial in number is 1–866–659–0537 with a pass code of 9933701.

Status: Open to the public, but without a public comment period.

Background: The Advisory Board was established under the Energy Employees Occupational Illness Compensation Program Act of 2000 to advise the President on a variety of policy and technical functions required to implement and effectively manage the new compensation program. Key functions of the Advisory Board include providing advice on the development of probability of causation guidelines which have been promulgated by the Department of Health and Human Services (HHS) as a final rule, advice on methods of dose reconstruction which have also been promulgated by HHS as a final rule, advice on the scientific validity and quality of dose estimation and reconstruction efforts being performed for purposes of the compensation program, and advice on petitions to add classes of workers to the Special Exposure Cohort (SEC).

In December 2000, the President delegated responsibility for funding, staffing, and operating the Advisory Board to HHS, which subsequently delegated this authority to the CDC. NIOSH implements this responsibility for CDC. The charter was issued on August 3, 2001, renewed at appropriate intervals, will expire on August 3, 2011.

Purpose: This Advisory Board is charged with (a) providing advice to the Secretary, HHS, on the development of guidelines under Executive Order 13179; (b) providing advice to the Secretary, HHS, on the scientific validity and quality of dose reconstruction efforts performed for this program; and (c) upon request by the Secretary, HHS, advising the Secretary on whether there is a class of employees at any Department of Energy facility who were exposed to radiation but for whom it is not feasible to estimate their radiation dose, and on whether there is reasonable likelihood that such radiation doses may have endangered the health of members of this class.

Matters To Be Discussed: The agenda for the conference call includes: Blockson Chemical Company Radon Model Validation; Board Subcommittee and Work Group Updates; Board Working Groups Transcripts Reviews; OCAS SEC Petition Evaluations Update for October Board Meeting; DOL Consideration of OCAS Ruttenber Data Review.

The agenda is subject to change as priorities dictate.

Because there is not a public comment period, written comments may be submitted. Any written comments received will be included in the official record of the meeting and should be submitted to the contact person below in advance of the meeting.

Contact Person for More Information: Theodore M. Katz, M.P.A., Executive Secretary, NIOSH, CDC, 1600 Clifton Rd. NE., *Mailstop:* E–20, Atlanta, GA 30333, Telephone (513) 533–6800, Toll Free 1–800–CDC–INFO, E-mail *ocas@cdc.gov*.

The Director, Management Analysis and Services Office, has been delegated the authority to sign **Federal Register** notices pertaining to announcements of meetings and other committee management activities, for both CDC and the Agency for Toxic Substances and Disease Registry.

Dated: August 10, 2009.

Elaine L. Baker,

Director, Management Analysis and Services Office Centers for Disease Control and Prevention.

[FR Doc. E9–19637 Filed 8–14–09; 8:45 am]

BILLING CODE 4163–18–P

DEPARTMENT OF HEALTH AND HUMAN SERVICES

Centers for Disease Control and Prevention

Disease, Disability, and Injury Prevention and Control Special Emphasis Panel (SEP): Human Immunodeficiency Virus (HIV) Prevention Projects for Community-Based Organizations, Funding Opportunity Announcement (FOA), PS10–1003, Initial Review

In accordance with Section 10(a)(2) of the Federal Advisory Committee Act (Pub. L. 92–463), the Centers for Disease Control and Prevention (CDC) announces the aforementioned meeting.

Times and Dates:

8:30 a.m.–5:30 p.m., December 6, 2009 (Closed)
8:30 a.m.–5:30 p.m., December 7, 2009 (Closed)
8:30 a.m.–5:30 p.m., December 8, 2009 (Closed)
8:30 a.m.–5:30 p.m., December 9, 2009 (Closed)
8:30 a.m.–5:30 p.m., December 10, 2009 (Closed)
8:30 a.m.–5:30 p.m., December 11, 2009 (Closed)
8:30 a.m.–5:30 p.m., December 12, 2009 (Closed)

Place: Sheraton Atlanta Hotel, 165 Courtland Street, NE., Atlanta, Georgia, 30303, Telephone (404) 659–6500.

Status: The meeting will be closed to the public in accordance with provisions set forth in Section 552b(c) (4) and (6), Title 5 U.S.C., and the Determination of the Director, Management Analysis and Services Office, CDC, pursuant to Public Law 92–463.

Matters To Be Discussed: The meeting will include the initial review, discussion, and evaluation of ''HIV Prevention Projects for Community-Based Organizations, FOA PS10–003.''

Contact Person For More Information: Monica Farmer, M.Ed., Public Health Analyst, Strategic Science and Program Unit, Office of the Director, Coordinating Center for Infectious Diseases, CDC, 1600 Clifton Road, NE., Mailstop E–60, Atlanta, GA 30333, *Telephone:* (404) 498–2277.

The Director, Management Analysis and Services Office, has been delegated the authority to sign **Federal Register** notices pertaining to announcements of meetings and other committee management activities, for both CDC and the Agency for Toxic Substances and Disease Registry.

Dated: August 5, 2009.

Elaine L. Baker,

Director, Management Analysis and Services Office, Centers for Disease Control and Prevention.

[FR Doc. E9–19638 Filed 8–14–09; 8:45 am]

BILLING CODE 4163–18–P

DEPARTMENT OF HOMELAND SECURITY

Science and Technology Directorate

Notice of Video Quality in Public Safety Conference

AGENCY: Science and Technology Directorate, DHS.

ACTION: Notice of open conference.

SUMMARY: The U.S. Department of Homeland Security's (DHS) Office for Interoperability and Compatibility (OIC), in partnership with the Public Safety Communications Research (PSCR) program within the U.S Department of Commerce, will host the second Video Quality in Public Safety (VQiPS) conference in September 2009. The conference will provide stakeholders with the opportunity to discuss their successes and the challenges related to video quality and interoperability. Information will be presented by field experts regarding video technology, standards development, and video system integration. The conference will also review the work of the VQiPS Working Group, which is comprised of volunteers from each public safety discipline—local, state, and Federal law, fire, and emergency medical services practitioners; Federal partners; representatives from academia and non-profit entities; and manufacturers. The Working Group coordinates efforts among organizations and agencies that are developing video standards for their own use.

DATES: The conference will take place Tuesday, September 1, 2009, through Thursday, September 3, 2009.

ADDRESSES: The conference will be held at the Institute for Telecommunication Sciences laboratories at 325 Broadway, Boulder, Colorado. Additional conference details can be found at *http://www.its.bldrdoc.gov/psvq/vqips/*.

FOR FURTHER INFORMATION CONTACT: Cuong Luu, U.S. Department of Homeland Security, Science and Technology Directorate, Office for Interoperability and Compatibility. *E-mail: VOIP_Working_Group@sra.com*.

SUPPLEMENTARY INFORMATION: For emergency responders using incident video services, a clear picture can mean the difference between life and death. Video applications are quickly emerging as an essential component in seamless communications among emergency responders. In the past, public safety has looked to manufacturers to inform them of their video equipment needs, but as video technology has evolved, the array of options for public safety practitioners has grown and the interoperability challenges have become increasingly complex. Thus, the need has emerged for public safety to collectively articulate their video quality needs to the manufacturing community.

In 2008, OIC within DHS and the U.S. Department of Commerce's PSCR program formed the VQiPS Working Group, which is composed of volunteers from each public safety discipline. Participants include local, state, and Federal law, fire, and emergency medical services practitioners; Federal partners; representatives from academia and non-profit entities; and manufacturers. Together, Working Group members coordinate efforts among organizations and agencies that are developing video standards for their own use.

Although each public safety discipline's video content may seem very different on the surface, many common elements exist that imply similar video quality specifications. The Working Group is therefore developing a set of application-independent use cases and a user guide to help public safety agencies determine their particular use cases. The Working Group effort will help practitioners implement effective video systems for their specific needs. Future outputs of the Working Group will include a glossary of shared terminology related to video quality, video equipment, and specifications to aid public safety agencies in becoming more effective.

As public safety agencies migrate to more powerful broadband systems, the use of video will undoubtedly increase. In preparation, OIC is bridging the gap between diverse agencies and preventing duplicative or competing efforts to define and deploy video systems. OIC is also acting as an objective technical resource to ensure future video technologies reflect the needs of the entire public safety community.

More information about VQiPS is available at *http://www.safecomprogram.gov/SAFECOM/currentprojects/videoquality/videoquality.htm*.

Dated: July 29, 2009.

Cuong Luu,

VQiPS Program Manager.

[FR Doc. E9–19649 Filed 8–14–09; 8:45 am]

BILLING CODE 9110–9F–P

DEPARTMENT OF HOUSING AND URBAN DEVELOPMENT

[Docket No. FR–5288–N–07]

Notice of Proposed Information Collection for Public Comment; Public Housing Operating Fund Program: Operating Budget and Related Form

AGENCY: Office of the Assistant Secretary for Public and Indian Housing, HUD.

ACTION: Notice.

SUMMARY: The proposed information collection requirement described below will be submitted to the Office of Management and Budget (OMB) for review, as required by the Paperwork Reduction Act. The Department is soliciting public comments on the subject proposal.

DATES: *Comments Due Date:* October 16, 2009.

ADDRESSES: Interested persons are invited to submit comments regarding this proposal. Comments should refer to the proposal by name and/or OMB Control number and should be sent to: Lillian Deitzer, Reports Liaison Officer, Public and Indian Housing, Department of Housing and Urban Development, 451 7th Street, SW., Room 4116, Washington, DC 20410–5000.

FOR FURTHER INFORMATION CONTACT: Dacia Rogers, (202) 402–4109, for copies of the proposed forms and other available documents. (This is not a toll-free number.)

SUPPLEMENTARY INFORMATION: The Department will submit the proposed information collection to OMB for review, as required by the Paperwork Reduction Act of 1995 (44 U.S.C. Chapter 35, as amended). This notice is soliciting comments from members of the public and affected agencies concerning the proposed collection of information to: (1) Evaluate whether the proposed collection of information is necessary for the proper performance of the functions of the agency, including whether the information will have practical utility; (2) evaluate the accuracy of the agency's estimate of the burden of the proposed collection of information; (3) enhance the quality, utility, and clarity of the information to be collected; and (4) minimize the burden of the collection of information on those who are to respond, including through the use of appropriate automated collection techniques or other forms of information technology, e.g., permitting electronic submission of responses.

This Notice also lists the following information:

Title of Proposal: Public Housing Operating Fund Program: Operating Budget and Related Form.

OMB Control Number: 2577–0026.

Description of the need for the information and proposed use: The operating budget and related form are submitted by PHAs for the low-income housing program. The operating budget provides a summary of proposed budget receipts and expenditures by major category, as well as blocks for indicating approval of budget receipts and expenditures by the PHA and HUD. The related form provides a record of PHA Board approval of how the amounts shown on the operating budget were arrived at, as well as justification of certain specified amounts. The information is reviewed by HUD to determine if the plan of operation adopted by the PHA and amounts included therein are reasonable for the efficient and economical operation of the development(s), and the PHA is in compliance with HUD procedures to assure that sound management practices will be followed in the operation of the development. A small number of PHAs (200) are still required to submit their operating budget packages to HUD, namely those that are troubled, those that are recently out of troubled status or at risk of becoming troubled, or those that are at risk of fiscal insolvency. PHAs are still required to prepare their operating budgets and submit them to their Board for approval prior to their operating subsidy being approved by HUD. The operating budgets must be kept on file for review, if requested.

Agency form number, if applicable: HUD–52574.

Members of affected public: PHAs, State or local government.

Estimation of the total number of hours needed to prepare the information collection including number of respondents: The estimated number of respondents is 200 troubled PHAs, PHAs that prepare and submit to the Board of Commissioners operating budgets and related form annually and submit to HUD, for a reporting burden of 23,500 hours. The remaining number of respondents that submit the related form to HUD is 2941 for a reporting burden of 534 hours. The total reporting burden is 24,034 hours.

Status of the proposed information collection: Extension of an existing collection.

Authority: Section 3506 of the Paperwork Reduction Act of 1995, 44 U.S.C. Chapter 35, as amended.

Dated: August 10, 2009.

Merrie Nichols-Dixon,

Deputy Director for Policy, Program and Legislative Initiatives.

[FR Doc. E9–19678 Filed 8–14–09; 8:45 am]

BILLING CODE 4210–67–P

DEPARTMENT OF THE INTERIOR

Office of the Special Trustee for American Indians

Notice of Proposed Renewal of Information Collection

AGENCY: Office of the Special Trustee for American Indians, Interior.

ACTION: Notice and request for comments.

SUMMARY: In compliance with section 3506(c)(2)(A) of the Paperwork Reduction Act of 1995, the Office of the Special Trustee for American Indians, Department of the Interior, announces that it has submitted a request for proposed extension of an information collection to the Office of Management and Budget and requests public comments on this submission.

DATES: OMB has up to 60 days to approve or disapprove the information collection request, but may respond after 30 days; therefore, public comments should be submitted to OMB by *September 16, 2009*, in order to be assured of consideration.

FOR FURTHER INFORMATION CONTACT: Send your written comments by facsimile to (202) 395–5806 or e-mail (*OIRA_DOCKET@omb.eop.gov*) to the Office of Information and Regulatory Affairs, Office of Management and Budget, *Attention:* Department of the Interior Desk Officer (1035–0003). Also, please send a copy of your comments to Linda S. Thomas, Office of the Secretary Information Collection Clearance Officer, U.S. Department of the Interior, MS 116–SIB, 1951 Constitution Avenue, NW., Washington, DC 20240, or send an e-mail to *Linda_Thomas@nbc.gov*. Additionally, you may fax them to her at (202) 219–2374. Individuals providing comments should reference OMB control number 1035–0003, ''Application to Withdraw Tribal Funds from Trust Status, 25 CFR 1200.''

FOR FURTHER INFORMATION CONTACT: To request more information on this information collection or to obtain a

copy of the collection instrument, please write to Frank Perniciaro, Office of the Special Trustee, Office of External Affairs, 4400 Masthead St., NE., Room 323, Albuquerque, NM 87109. You may also request e-mail him at *frank_perniciaro@ost.doi.gov*.

SUPPLEMENTARY INFORMATION:

I. Abstract

Office of Management and Budget (OMB) regulations at 5 CFR 1320, which implement the Paperwork Reduction Act of 1995 (Pub. L. 104–13), require that interested members of the public and affected parties have an opportunity to comment on information collection and recordkeeping activities (*see* 5 CFR 1320.8(d). This notice identifies an information collection activity that the Office of the Special Trustee for American Indians has submitted to OMB for renewal.

Public Law 103–412, The American Indian Trust Fund Management Reform Act of 1994, allows Indian tribes on a voluntary basis to take their funds out of trust status within the Department of the Interior (and the Federal Government) in order to manage such funds on their own. 25 CFR Part 1200, subpart B, § 1200.13, ''How does a tribe apply to withdraw funds?'' describes the requirements for application for withdrawal. The Act covers all tribal trust funds including judgment funds as well as some settlements funds, but excludes funds held in Individual Indian Money accounts. Both the Act and the regulations state that upon withdrawal of the funds, the Department of the Interior (and the Federal Government) have no further liability for such funds. Accompanying their application for withdrawal of trust funds, tribes are required to submit a Management Plan for managing the funds being withdrawn, to protect the funds once they are out of trust status.

This information collection allows the Office of the Special Trustee to collect the tribes' applications for withdrawal of funds held in trust by the Department of the Interior. If this information were not collected, the Office of the Special Trustee would not be able to comply with the American Indian Trust Fund Management Reform Act of 1994, and tribes would not be able to withdraw funds held for them in trust by the Department of the Interior.

II. Data

(1) *Title:* Application to Withdraw Tribal Funds from Trust Status, 25 CFR Part 1200.

OMB Control Number: 1035–0003.

Current Expiration Data: August 31, 2009.

Type of Review: Information Collection Renewal.

Affected Entities: State, Local and Tribal Government.

Estimated annual number of respondents: 2.

Frequent of response: Once per respondent.

(2) *Annual reporting and record keeping burden:*

Total annual reporting per respondent: 400 hours.

Total annual reporting: 800 hours.

(3) *Description of the need and use of the information:* The statutorily-required information is needed to provide a vehicle for tribes to withdraw funds from accounts held in trust for them by the United States Government.

(4) As required under 5 CFR 1320.8(d), a **Federal Register** notice soliciting comments on the information collection was published on May 20, 2009 (74 FR 23738). No comments were received. This notice provides the public with an additional 30 days in which to comment on the proposed information collection activity.

III. Request for Comments

The Department of the Interior invites comments on:

(a) Whether the collection of information is necessary for the proper performance of the functions of the agency, including whether the information will have practical utility;

(b) The accuracy of the agency's estimate of the burden of the collection and the validity of the methodology and assumptions used;

(c) Ways to enhance the quality, utility, and clarity of the information to be collected; and

(d) Ways to minimize the burden of the collection of information on those who are to respond, including through the use of appropriate automated, electronic, mechanical, or other collection techniques or other forms of information techniques.

''Burden'' means the total time, effort, or financial resources expended by persons to generate, maintain, retain, disclose or provide information to or for a Federal agency. This includes the time needed to review instructions; to develop, acquire, install and utilize technology and systems for the purpose of collecting, validating and verifying information, processing and maintaining information, and disclosing and providing information; to train personnel and to be able to respond to a collection of information, to search data sources, to complete and review the collection of information; and to transmit or otherwise disclose the information.

All written comments, with names and addresses, will be available for public inspection. If you wish us to withhold your personal information, you must prominently state at the beginning of your comment what personal information you want us to withhold. We will honor your request to the extent allowable by law. If you wish to view any comments received, you may do so by scheduling an appointment with the Office of the Special Trustee by calling (505) 816–1173.

An agency may not conduct or sponsor, and a person is not required to respond to, a collection of information unless it displays a currently valid Office of Management and Budget control number.

Dated: August 10, 2009.

Donna Erwin,

Acting Special Trustee, Office of the Special Trustee for American Indians.

[FR Doc. E9–19634 Filed 8–14–09; 8:45 am]

BILLING CODE 4310–2W–P

DEPARTMENT OF THE INTERIOR

Bureau of Reclamation

Proposed Water Service Contract, El Dorado County Water Agency, El Dorado County, CA

AGENCY: Bureau of Reclamation, Interior.

ACTION: Notice of availability of the Draft Environmental Impact Statement/ Environmental Impact Report (EIS/EIR).

SUMMARY: Pursuant to the National Environmental Policy Act and the California Environmental Quality Act, the Bureau of Reclamation (Reclamation) and the El Dorado County Water Agency (EDCWA) as lead agencies have made available for public review and comment a joint Draft EIS/ EIR for a Proposed Water Service Contract pursuant to Public Law 101–514. The Draft EIS/EIR describes and presents the environmental effects of four alternatives, including no action, of entering into a long-term Central Valley Project (CVP) water service contract with EDCWA.

DATES: Two public meetings have been scheduled to receive oral or written comments regarding environmental effects:

- Tuesday, September 15, 2009, 6 p.m. to 8 p.m. in Folsom, CA.
- Wednesday, September 16, 2009, 6 p.m. to 8 p.m. in El Dorado Hills, CA.

Written comments on the Draft EIS/ EIR will be accepted on or before October 16, 2009.

ADDRESSES: The public meetings will be held at:

- City of Folsom Community Center, 52 Natoma Street, Folsom, California.
- El Dorado Hills Fire Department, 1050 Wilson Way, El Dorado Hills, California.

Send written comments on the Draft EIS/EIR to Ms. Elizabeth Dyer, Bureau of Reclamation, 7794 Folsom Dam Road, Folsom, California 95630. Copies of the Draft EIS/EIR may be requested from Ms. Dyer at the above address, or by calling 916–989–7256. See **SUPPLEMENTARY INFORMATION** section for locations where copies of the Draft EIS/EIR are available for public inspection. The Draft EIR/EIS is also available from the following Web site: *http://www.usbr.gov/mp/nepa/nepa_projdetails.cfm?Project_ID=26*.

FOR FURTHER INFORMATION CONTACT: Elizabeth Dyer, Natural Resources Specialist, Reclamation, at 916–989–7256, *elizabethdyer@usbr.gov*; or Tracey Eden-Bishop, Water Resources Engineer, El Dorado County Water Agency, 530–621–5392, *tracey.eden-bishop@edcgov.us*.

SUPPLEMENTARY INFORMATION: The focus of the Draft EIS/EIR is to evaluate the potential environmental and socio-economic impacts of the new CVP water service contract authorized under Public Law 101–514. The Draft EIS/EIR combines the programmatic and project-level analysis of the potential effects. At the project-level, the potential hydrologic changes to the American River basin and the CVP/State Water Project including the Sacramento-San Joaquin River Delta are evaluated. At the programmatic level, the potential long-term effects and indirect effects of this new water contract within the context of existing policies, infrastructure, public services, and population demographics as supported by the El Dorado County General Plan and EIR are evaluated. Since no new facilities or infrastructure are part of this new CVP water contracting action, no direct impacts of this new water contract are included in the analysis. Copies of the Draft EIS/EIR are available for public review at the following locations:

- Bureau of Reclamation, Denver Office Library, Building 67, Room 167, Denver Federal Center, 6th and Kipling, Denver, CO 80225; telephone: 303–445–2072.
- Bureau of Reclamation, Office of Public Affairs, 2800 Cottage Way, Sacramento, CA 95825–1898; telephone: 916–978–5100.
- Natural Resources Library, U.S. Department of the Interior, 1849 C Street NW., Main Interior Building, Washington, DC 20240–0001.
- Bureau of Reclamation, Central California Area Office, 7794 Folsom Dam Road, Folsom, CA 95630.
- El Dorado County Water Agency, 3932 Ponderosa Road Suite 200, Shingle Springs, CA 95682.

Before including your name, address, phone number, e-mail address, or other personal identifying information in your comment, you should be aware that your entire comment—including your personal identifying information—may be made publicly available at any time. While you can ask us in your comment to withhold your personal identifying information from public review, we cannot guarantee that we will be able to do so.

Dated: May 15, 2009.

Donald R. Glaser,

Regional Director, Mid-Pacific Region.

[FR Doc. E9–19714 Filed 8–14–09; 8:45 am]

BILLING CODE 4310–MN–P

DEPARTMENT OF THE INTERIOR

Fish and Wildlife Service

[FWS–R9–IA–2009–N154; 96300–1671–0000–P5]

Receipt of Applications for Permit

AGENCY: Fish and Wildlife Service, Interior.

ACTION: Notice of receipt of applications for permit.

SUMMARY: We, the U.S. Fish and Wildlife Service, invite the public to comment on the following applications for permits to conduct certain activities with endangered species. The Endangered Species Act requires that we invite public comment on these permit applications.

DATES: Written data, comments or requests must be received by September 16, 2009.

ADDRESSES: Documents and other information submitted with these applications are available for review, subject to the requirements of the Privacy Act and Freedom of Information Act, by any party who submits a written request for a copy of such documents within 30 days of the date of publication of this notice to: U.S. Fish and Wildlife Service, Division of Management Authority, 4401 North Fairfax Drive, Room 212, Arlington, Virginia 22203; fax 703/358–2281.

FOR FURTHER INFORMATION CONTACT: Division of Management Authority, telephone 703/358–2104.

SUPPLEMENTARY INFORMATION:

Endangered Species

The public is invited to comment on the following applications for a permit to conduct certain activities with endangered species. This notice is provided pursuant to Section 10(c) of the Endangered Species Act of 1973, as amended (16 U.S.C. 1531 *et seq.*). Submit your written data, comments, or requests for copies of the complete applications to the address shown in **ADDRESSES**.

Applicant: Jesse D'Elia, U.S. Fish and Wildlife Service, Portland, OR, PRT–217686

The applicant requests a permit to import toe-pad samples of California condor (*Gymnogyps californianus*) to be obtained from museum specimens worldwide for the purpose of scientific research. This notification covers activities to be conducted by the applicant over a 5-year period.

Applicant: U.S. Fish and Wildlife Service/National Black-Footed Ferret Conservation Center, Carr, CO, PRT–800411 and PRT–086867

The applicant requests an amendment of their permits to export, import, and re-import both live captive-born and wild specimens, biological samples, and salvaged material of black-footed ferret (*Mustela nigripes*) to and from Canada for completion of identified tasks and objectives mandated under the Black-footed Ferret Recovery Plan. Salvaged materials may include but are not limited to: Whole or partial specimens, blood, tissue, hair, and fecal swabs. This notification covers activities to be conducted by the applicant over a 5-year period.

Applicant: Samuel K. Wasser/University of Washington, Seattle, WA, PRT–179638

The applicant requests a permit to import ivory pieces from elephant (*Elephantidae* spp.) collected from tusks seized in Osaka, Japan, for the purpose of scientific research.

Applicant: Nick Misciagna, Staten Island, NY, PRT–223180

The applicant requests a permit to import the sport-hunted trophy of one male bontebok (*Damaliscus pygargus pygargus*) culled from a captive herd maintained under the management program of the Republic of South Africa, for the purpose of enhancement of the survival of the species.

Dated: August 7, 2009.

Lisa J. Lierheimer,

Senior Permit Biologist, Branch of Permits, Division of Management Authority.

[FR Doc. E9–19579 Filed 8–14–09; 8:45 am]

BILLING CODE 4310–55–P

DEPARTMENT OF JUSTICE

Notice of Lodging of Modified Consent Decree Pursuant to the Clean Air Act

Notice is hereby given that on August 11, 2009, a proposed modified Consent Decree in *United States et al.* v. *Ohio Edison Co., et al.,* (S.D. Ohio), No. C2–99–1181, was lodged with the United States District Court for the Southern District of Ohio. The proposed modified Decree is incorporated within a Joint Motion to Modify Consent Decree with Order Modifying Consent Decree, filed the same day in the same court.

Under the proposed modified Consent Decree, Ohio Edison agrees to repower one of its coal-fired power plants—the R.E. Burger Generating Station Units 4 and 5 (''Burger'') near Shadyside, Ohio—using primarily renewable biomass fuel. The agreement, joined by the States of New York, Connecticut and New Jersey, modifies a 2005 consent decree requiring reductions in Ohio Edison's emissions of sulfur dioxide (''SO_2'') and nitrogen oxide (''NO_X''). The modified decree will substantially reduce emissions of SO_2 and NO_X from Burger's current levels and significantly reduce net carbon dioxide emissions from current levels.

The Department of Justice will receive for a period of thirty (30) days from the date of this publication comments relating to the modified Consent Decree. Comments should be addressed to the Assistant Attorney General, Environment and Natural Resources Division, and either e-mailed to *pubcomment-ees.enrd@usdoj.gov* or mailed to P.O. Box 7611, U.S. Department of Justice, Washington, DC 20044–7611, and should refer to *United States et al.* v. *Ohio Edison, et al.,* (S.D. Ohio.), No. C2–99–1181, D.J. Ref. 90–5–2–1–06894. The modified Consent Decree may be examined at the Office of the United States Attorney, Southern District of Ohio, 280 North High Street, Fourth Floor, Columbus, Ohio 43215. During the public comment period, the modified Consent Decree may also be examined on the following Department of Justice Web site, *http://www.usdoj.gov/enrd/Consent_Decrees.html.* A copy of the modified Consent Decree may also be obtained by mail from the Consent Decree Library, P.O. Box 7611, U.S. Department of Justice, Washington, DC 20044–7611 or by faxing or e-mailing a request to Tonia Fleetwood (*tonia.fleetwood@usdoj.gov*), fax no. (202) 514–0097, phone confirmation number (202) 514–1547. In requesting a copy from the Consent Decree Library, please enclose a check in the amount of $2.50 (25 cents per page reproduction cost) payable to the U.S. Treasury.

Maureen Katz,

Deputy Chief, Environmental Enforcement Section.

[FR Doc. E9–19564 Filed 8–14–09; 8:45 am]

BILLING CODE 4410–15–P

NATIONAL AERONAUTICS AND SPACE ADMINISTRATION

[Notice (09–072)]

Notice of Intent To Grant Partially Exclusive License

AGENCY: National Aeronautics and Space Administration.

ACTION: Notice of intent to grant partially exclusive license.

SUMMARY: This notice is issued in accordance with 35 U.S.C. 209(c)(1) and 37 CFR 404.7(a)(1)(i). NASA hereby gives notice of its intent to grant an exclusive license worldwide to practice the invention described and claimed in U.S. Patent No. 7,094,045, entitled''Microencapsulation System and Method'', U.S. Patent No. 7,295,309, entitled ''Microparticle Analysis System and Method'' to NuVue Therapeutics, Inc. (formerly known as Critical Care Innovations, Inc.), having its principal place of business in Fairfax, Virginia. The fields of use are for both clinical and veterinary applications in the production and applications of microcapsules and microencapsulation of all cyto-toxic anti-cancer drugs. Also included are externally-triggered microcapsules including the use of ultrasound and magnetic flux triggering technologies, in situ activation inside microcapsules, cell encapsulation, and urokinase and DNA measurement of metastasis for diagnostic testing. The patent rights in these inventions have been assigned to the United States of America as represented by the Administrator of the National Aeronautics and Space Administration. The prospective partially exclusive license will comply with the terms and conditions of 35 U.S.C. 209 and 37 CFR 404.7.

DATES: The prospective partially exclusive license may be granted unless, within fifteen (15) days from the date of this published notice, NASA receives written objections including evidence and argument that establish that the grant of the license would not be consistent with the requirements of 35 U.S.C. 209 and 37 CFR 404.7. Competing applications completed and received by NASA within fifteen (15) days of the date of this published notice will also be treated as objections to the grant of the contemplated exclusive license.

Objections submitted in response to this notice will not be made available to the public for inspection and, to the extent permitted by law, will not be released under the Freedom of Information Act, 5 U.S.C. 552.

ADDRESSES: Objections relating to the prospective license may be submitted to Patent Counsel, Office of Chief Counsel, Mail Code AL, 2101 NASA Parkway, Houston, TX 77058, (281) 483–4871; (281) 483–6936 [Facsimile].

FOR FURTHER INFORMATION CONTACT: Theodore U. Ro, Patent Attorney, Office of Chief Counsel, Johnson Space Center, Mail Code AL, 2101 NASA Parkway, Houston, TX 77058, (281)244–7148; (281)483–6936 [Facsimile]. Information about other NASA inventions available for licensing can be found online at *http://technology.nasa.gov/.*

Dated: August 7, 2009.

Richard W. Sherman,

Deputy General Counsel.

[FR Doc. E9–19487 Filed 8–14–09; 8:45 am]

BILLING CODE P

NUCLEAR REGULATORY COMMISSION

[Docket No.: 70–1151; NRC–2009–0355; EA–08–244; License No.: SNM–1107]

In the Matter of Westinghouse Electric Company LLC; Confirmatory Order (Effective Immediately)

I

Westinghouse Electric Company LLC (WEC or Licensee) is the holder of Operating License No. SNM–1107 issued by the Nuclear Regulatory Commission (NRC or Commission) pursuant to 10 CFR part 70. The license in effect at the time of the matters described below was most recently amended via Amendment 5, issued on April 10, 2009. The license authorizes the operation of WEC in accordance with the conditions specified therein. The facility is located on the Licensee's site in Columbia, South Carolina.

This Confirmatory Order is the result of an agreement reached during an Alternative Dispute Resolution (ADR)

mediation session conducted on July 27, 2009.

II

On August 11, 2008, the NRC's Office of Investigations (OI) completed an investigation (OI Case No. 2–2008–002) regarding activities at the WEC facility located in Columbia, South Carolina. Based on the evidence developed during the investigation, the NRC staff identified three apparent violations.

The first apparent violation involved the failure to establish adequate management measures, as required by 10 CFR 70.62(d), to ensure that Items Relied On For Safety (IROFS) are available and reliable to perform their function when needed, in that the periodicity of required ventilation system filter differential pressure readings, which the Integrated Safety Analysis specified as IROFS Vent 902, was not specified in implementing procedures.

The second apparent violation involved two examples in which information provided to the NRC or required to be maintained by the licensee was not complete and accurate as required by 10 CFR 70.9. In the first example, information documented in the corrective action program and provided to the NRC on September 11, 2007 regarding the circumstances surrounding falsified ventilation system data was inaccurate and incomplete as to the identification and employment status of the individual responsible for the falsification. In the second example, training records documenting employee completion of required training were incomplete and inaccurate in that the Electronic Training and Procedures System (ETAPS) indicated training was completed when, in fact, it was not.

The third apparent violation involved training records that were falsified by a contractor foreman, who accessed individual electronic training records of various employees and acknowledged completion of certain training requirements, when those training requirements were not accomplished. This action was an apparent willful violation of Columbia Plant Administrative Procedure CA–002, Columbia Plant Procedure System, which states that ETAPS End Users must read and then acknowledge procedures governing their job responsibilities in ETAPS before performing work assignments or manufacturing processes.

The results of the investigation were sent to the Licensee in a letter dated May 6, 2009. This letter also offered the Licensee the opportunity either to: provide a written response, attend a Predecisional Enforcement Conference, or participate in ADR mediation. In response to the NRC's offer, the Licensee requested use of the NRC's ADR process to resolve the apparent violations.

III

On July 27, 2009, representatives of the NRC and WEC met in an ADR session mediated by a professional mediator, which was arranged through Cornell University's Institute on Conflict Resolution. ADR is a process in which a neutral mediator with no decision-making authority assists the parties in reaching an agreement or resolving any differences regarding their dispute. This confirmatory order is issued pursuant to the agreement reached during the ADR process. The elements of the agreement consist of the following:

1. WEC acknowledged that corrective actions and enhancements were warranted to preclude recurrence of the matters discussed in the NRC's letter of May 6, 2009.

2. With respect to the matters described in section II above and NRC concerns with respect to precluding recurrence, WEC completed the following corrective actions and enhancements:

a. As part of the Nuclear Criticality Safety Improvement Project, WEC has updated procedures and provided enhanced markings to delineate steps that are critical to the availability and reliability of IROFS. This program was completed June 30, 2009.

b. WEC revised management oversight for maintenance and contractor activities by establishing: (1) A Maintenance Operations Manager position responsible for day-to-day Westinghouse maintenance activities and (2) a Site Maintenance Manager, reporting to the Plant Manager, responsible for providing direct oversight of contractor operations, including contractor corrective action program issues and contractor training.

c. Required primary service providers (*i.e.,* Greggs Construction, Prime State Insulation (PSI)) to have a safety/compliance officer to monitor compliance with procedures and ensure safe operation of contractor activities.

d. Reset ETAPS passwords for all PSI employees.

e. Provided instruction to all WEC and contractors employees via the annual required refresher training to not share ETAPS passwords, and trained supervisors on methods to verify employee training completion.

f. Developed process and procedures by which WEC will audit completion of required training on a sitewide basis.

g. Required a Performance Improvement Program for PSI which includes expectations related to safety, reporting of issues, procedural compliance, training and fitness-for-duty.

h. Provided independent training for human resources, security and two Environmental Health and Safety (EH&S) managers regarding enhanced investigative training and documentation techniques for issues which have the potential to include employee wrongdoing.

3. In addition to the actions completed by WEC as discussed above, WEC agreed to additional corrective actions and enhancements for the Columbia Fuel Fabrication Facility, as fully delineated below in Section V of the Confirmatory Order.

4. At the ADR session, the NRC and WEC agreed that (1) The actions referenced in section III.2 and section V would be incorporated into a Confirmatory Order, and (2) the resulting Confirmatory Order would be considered by the NRC for any assessment of WEC, as appropriate.

5. In consideration of the completed corrective actions delineated in section III.2 and the actions to be taken delineated in section V of this Confirmatory Order, the NRC agreed to refrain from proposing a civil penalty or issuing a Notice of Violation for all matters discussed in the NRC's letter to WEC of May 6, 2009 (EA–08–244).

6. This agreement is binding upon successors and assigns of WEC.

On July 31, 2009, the Licensee consented to issuance of this Order with the commitments described in section III.2 and section V. The Licensee further agreed that this Order is to be effective upon issuance and that it has waived its right to a hearing.

IV

Since the licensee has completed the actions as delineated in section III.2 and agreed to take the actions as set forth in section V, the NRC has concluded that its concerns can be resolved through issuance of this Order.

I find that the Licensee's commitments as set forth in section III.2 and section V are acceptable and necessary and conclude that with these commitments the public health and safety are reasonably assured. In view of the foregoing, I have determined that public health and safety require that the Licensee's commitments be confirmed by this Order. Based on the above and

the Licensee's consent, this Order is immediately effective upon issuance.

V

Accordingly, pursuant to sections 104b, 161b, 161i, 161o, 182 and 186 of the Atomic Energy Act of 1954, as amended, and the Commission's regulations in 10 CFR 2.202 and 10 CFR part 70, It Is Hereby Ordered, Effective Immediately, that License No. SNM–1107 Be Modified as Follows:

a. WEC will conduct a quarterly management audit, on a sampling basis, of Apparent Cause Analyses in the WEC Corrective Action Program.

b. WEC will conduct an analysis of the causes of the falsification issues identified in section II above, and develop additional corrective actions and enhancements in response to the analysis.

c. WEC will incorporate lessons learned from this incident into new employee training and annual refresher training to all WEC and contractor employees. Aspects to be communicated will include, but are not limited to, the falsification of the multiple records and/or data, and consequences of such actions.

d. WEC will conduct an independent assessment of the effectiveness of the employee concerns processes to satisfactorily resolve WEC and contractor employee concerns.

e. WEC will conduct an independent assessment of the effectiveness of the enhanced investigative and documentation techniques in section III.2.h within six months of issuance of the Confirmatory Order. The independent assessment will be conducted by a party other than the developer of the program.

f. WEC agrees to complete the items listed in section V within twelve (12) months of issuance of the Confirmatory Order, unless otherwise stated.

g. Within three (3) months of completion of the terms of the Confirmatory Order, WEC will provide the NRC with a letter discussing its basis for concluding that the Confirmatory Order has been satisfied.

Notification to the NRC, as outlined above, should be made to the Regional Administrator, NRC Region II, 61 Forsyth Street, SW., Suite 23T85, Atlanta, Georgia 30303–8931.

The Regional Administrator, NRC Region II, may relax or rescind, in writing, any of the above conditions upon demonstration by WEC of good cause.

VI

Any person adversely affected by this Confirmatory Order, other than the Licensee, may request a hearing within 20 days of the Order's publication in the **Federal Register**. Where good cause is shown, consideration will be given to extending the time to request a hearing. A request for extension of time must be directed to the Director, Office of Enforcement, U.S. Nuclear Regulatory Commission, Washington, DC 20555–0001, and include a statement of good cause for the extension.

If a person other than WEC requests a hearing, that person shall set forth with particularity the manner in which his interest is adversely affected by this Order and shall address the criteria set forth in 10 CFR 2.309 (d) and (f).

If a hearing is requested by a person whose interest is adversely affected, the Commission will issue an Order designating the time and place of any hearing. If a hearing is held, the issue to be considered at such hearing shall be whether this Confirmatory Order should be sustained.

A request for a hearing must be filed in accordance with the NRC E-Filing rule, which became effective on October 15, 2007. The NRC E-filing Final Rule was issued on August 28, 2007 (72 **Federal Register** 49,139) and was codified in pertinent part at 10 CFR part 2, subpart B. The E-Filing process requires participants to submit and serve documents over the Internet or, in some cases, to mail copies on electronic optical storage media. Participants may not submit paper copies of their filings unless they seek a waiver in accordance with the procedures described below.

To comply with the procedural requirements associated with E-Filing, at least five (5) days prior to the filing deadline the requestor must contact the Office of the Secretary by e-mail at *HEARINGDOCKET@NRC.GOV*, or by calling (301) 415–1677, to request (1) A digital ID certificate, which allows the participant (or its counsel or representative) to digitally sign documents and access the E-Submittal server for any NRC proceeding in which it is participating; and/or (2) creation of an electronic docket for the proceeding (even in instances when the requestor (or its counsel or representative) already holds an NRC-issued digital ID certificate). Each requestor will need to download the Workplace Forms Viewer™ to access the Electronic Information Exchange (EIE), a component of the E-Filing system. The Workplace Forms Viewer™ is free and is available at *http://www.nrc.gov/site-help/e-submittals/install-viewer.html.* Information about applying for a digital ID certificate also is available on NRC's public Web site at *http://www.nrc.gov/site-help/e-submittals/apply-certificates.html.*

Once a requestor has obtained a digital ID certificate, had a docket created, and downloaded the EIE viewer, he/she can then submit a request for a hearing through EIE. Submissions should be in Portable Document Format (PDF) in accordance with NRC guidance available on the NRC public Web site at *http://www.nrc.gov/site-help/e-submittals.html.* A filing is considered complete at the time the filer submits its document through EIE. To be timely, electronic filings must be submitted to the EIE system no later than 11:59 p.m. Eastern Time on the due date. Upon receipt of a transmission, the E-Filing system time-stamps the document and sends the submitter an e-mail notice confirming receipt of the document. The EIE system also distributes an e-mail notice that provides access to the document to the NRC Office of the General Counsel and any others who have advised the Office of the Secretary that they wish to participate in the proceeding, so that the filer need not serve the document on those participants separately. Therefore, any others who wish to participate in the proceeding (or their counsel or representative) must apply for and receive a digital ID certificate before a hearing request is filed so that they may obtain access to the document via the E-Filing system.

A person filing electronically may seek assistance through the ''Contact Us'' link located on the NRC Web site at *http://www.nrc.gov/site-help/e-submittals.html* or by calling the NRC technical help line, which is available between 8:30 a.m. and 4:15 p.m., Eastern Time, Monday through Friday. The help line number is (800) 397–4209 or locally, (301) 415–4737.

Participants who believe that they have good cause for not submitting documents electronically must file a motion, in accordance with 10 CFR 2.302(g), with their initial paper filing requesting authorization to continue to submit documents in paper format. Such filings must be submitted by (1) First class mail addressed to the Office of the Secretary of the Commission, U.S. Nuclear Regulatory Commission, Washington, DC 20555–0001, Attention: Rulemaking and Adjudications Staff; or (2) courier, express mail, or expedited delivery service to the Office of the Secretary, Sixteenth Floor, One White Flint North, 11555 Rockville Pike, Rockville, Maryland 20852, Attention: Rulemaking and Adjudications Staff. Participants filing a document in this manner are responsible for serving the

document on all other participants. Filing is considered complete by first-class mail as of the time of deposit in the mail, or by courier, express mail, or expedited delivery service upon depositing the document with the provider of the service.

Documents submitted in adjudicatory proceedings will appear in NRC's electronic hearing docket, which is available to the public at *http://ehd.nrc.gov/EHD_Proceeding/home.asp*, unless excluded pursuant to an order of the Commission, an Atomic Safety and Licensing Board, or a Presiding Officer. Participants are requested not to include personal privacy information, such as social security numbers, home addresses, or home phone numbers in their filings. With respect to copyrighted works, except for limited excerpts that serve the purpose of the adjudicatory filings and would constitute a Fair Use application, participants are requested not to include copyrighted materials in their works.

VII

A Request for Hearing Shall Not Stay the Immediate Effectiveness of this Order.

Dated this 6th day of August 2009.

For the Nuclear Regulatory Commission.

Victor M. McCree,

Deputy Regional Administrator.

[FR Doc. E9–19642 Filed 8–14–09; 8:45 am]

BILLING CODE P

NUCLEAR REGULATORY COMMISSION

[NRC–2009–0357; Docket No. 03037121]

Notice of Availability of Environmental Assessment and Finding of No Significant Impact for License Amendment to Byproduct Materials License No. 47–19315–02, for Termination of the License and Unrestricted Release of the West Virginia School of Osteopathic Medicine's Facility in Lewisburg, WV

AGENCY: Nuclear Regulatory Commission.

ACTION: Issuance of Environmental Assessment and Finding of No Significant Impact for License Amendment.

FOR FURTHER INFORMATION CONTACT: Steve Hammann, Health Physicist, Commercial and R&D Branch, Division of Nuclear Materials Safety, Region I, 475 Allendale Road, King of Prussia, PA 19406; telephone (610)–337–5399; fax number (610)–337–5269; or by e-mail: *stephen.hammann@nrc.gov.*

SUPPLEMENTARY INFORMATION:

I. Introduction

The U.S. Nuclear Regulatory Commission (NRC) is considering the issuance of a license amendment to Byproduct Materials License No. 47–19315–02. This license is held by West Virginia School of Osteopathic Medicine (the Licensee), for its Smith Science Building (the Facility), located at 400 North Lee Street in Lewisburg, West Virginia. Issuance of the amendment would authorize release of the Facility for unrestricted use and termination of the NRC license. The Licensee requested this action in a letter dated May 1, 2009. The NRC has prepared an Environmental Assessment (EA) in support of this proposed action in accordance with the requirements of Title 10, *Code of Federal Regulations* (CFR), part 51 (10 CFR part 51). Based on the EA, the NRC has concluded that a Finding of No Significant Impact (FONSI) is appropriate with respect to the proposed action. The amendment will be issued to the Licensee following the publication of this FONSI and EA in the **Federal Register.**

II. Environmental Assessment

Identification of Proposed Action

The proposed action would approve the Licensee's May 1, 2009, license amendment request, resulting in release of the Facility for unrestricted use and the termination of its NRC materials license. License No. 47–19315–02 was issued on February 24, 2006, pursuant to 10 CFR part 30, and has been amended once since that time. This license authorized the Licensee to use unsealed byproduct material for the purpose of conducting research and development activities on laboratory bench tops and in hoods.

The Facility is located on the campus of the West Virginia School of Osteopathic Medicine and consists of classrooms, office space, and laboratories. The Facility is located in a mixed residential/commercial area. Within the Facility, use of licensed materials was confined to rooms 242 and 243 which have a combined area of 100 square meters.

On July 10, 2007, the Licensee ceased licensed activities and initiated a survey and decontamination of the Facility. Based on the Licensee's historical knowledge of the site and the conditions of the Facility the Licensee determined that only routine decontamination activities, in accordance with their NRC-approved operating radiation safety procedures, were required. The Licensee was not required to submit a decommissioning plan to the NRC because worker cleanup activities and procedures are consistent with those approved for routine operations. The Licensee conducted surveys of the Facility and provided information to the NRC to demonstrate that it meets the criteria in subpart E of 10 CFR part 20 for unrestricted release and for license termination.

Need for the Proposed Action

The Licensee has ceased conducting licensed activities at the Facility, and seeks the unrestricted use of its Facility and the termination of its NRC materials license.

Environmental Impacts of the Proposed Action

The historical review of licensed activities conducted at the Facility shows that such activities involved one radionuclide, hydrogen-3, with half-life greater than 120 days. Prior to performing the final status survey, the Licensee conducted decontamination activities, as necessary, in the areas of the Facility affected by the radionuclide.

The Licensee conducted a final status survey on April 28, 2009. This survey covered the two rooms in which licensed materials were used. The final status survey report was attached to the Licensee's amendment request dated May 1, 2009. The Licensee elected to demonstrate compliance with the radiological criteria for unrestricted release as specified in 10 CFR 20.1402 by using the screening approach described in NUREG–1757, ''Consolidated NMSS Decommissioning Guidance,'' Volume 2. The Licensee used the radionuclide-specific derived concentration guideline levels (DCGLs), developed there by the NRC, which comply with the dose criterion in 10 CFR 20.1402. These DCGLs define the maximum amount of residual radioactivity on building surfaces, equipment, and materials, and in soils, that will satisfy the NRC requirements in subpart E of 10 CFR part 20 for unrestricted release. The Licensee's final status survey results were below these DCGLs and are in compliance with the As Low As Reasonably Achievable (ALARA) requirement of 10 CFR 20.1402. The NRC thus finds that the Licensee's final status survey results are acceptable.

Based on its review, the staff has determined that the affected environment and any environmental impacts associated with the proposed action are bounded by the impacts evaluated by the ''Generic Environmental Impact Statement in Support of Rulemaking on Radiological

Criteria for License Termination of NRC-Licensed Nuclear Facilities'' (NUREG–1496) Volumes 1–3 (ML042310492, ML042320379, and ML042330385). The staff finds there were no significant environmental impacts from the use of radioactive material at the Facility. The NRC staff reviewed the docket file records and the final status survey report to identify any non-radiological hazards that may have impacted the environment surrounding the Facility. No such hazards or impacts to the environment were identified. The NRC has identified no other radiological or non-radiological activities in the area that could result in cumulative environmental impacts.

The NRC staff finds that the proposed release of the Facility for unrestricted use and the termination of the NRC materials license is in compliance with 10 CFR 20.1402. Based on its review, the staff considered the impact of the residual radioactivity at the Facility and concluded that the proposed action will not have a significant effect on the quality of the human environment.

Environmental Impacts of the Alternatives to the Proposed Action

Due to the largely administrative nature of the proposed action, its environmental impacts are small. Therefore, the only alternative the staff considered is the no-action alternative, under which the staff would leave things as they are by simply denying the amendment request. This no-action alternative is not feasible because it conflicts with 10 CFR 30.36(d), requiring that decommissioning of byproduct material facilities be completed and approved by the NRC after licensed activities cease. The NRC's analysis of the Licensee's final status survey data confirmed that the Facility meets the requirements of 10 CFR 20.1402 for unrestricted release and for license termination. Additionally, denying the amendment request would result in no change in current environmental impacts. The environmental impacts of the proposed action and the no-action alternative are therefore similar, and the no-action alternative is accordingly not further considered.

Conclusion

The NRC staff has concluded that the proposed action is consistent with the NRC's unrestricted release criteria specified in 10 CFR 20.1402. Because the proposed action will not significantly impact the quality of the human environment, the NRC staff concludes that the proposed action is the preferred alternative.

Agencies and Persons Consulted

NRC provided a draft of this Environmental Assessment to the State of West Virginia Office of Environmental Health Services for review on June 25, 2009. On July 23, 2009, the State of West Virginia Office of Environmental Health Services responded by e-mail. The State agreed with the conclusions of the EA, and otherwise had no comments.

The NRC staff has determined that the proposed action is of a procedural nature, and will not affect listed species or critical habitat. Therefore, no further consultation is required under section 7 of the Endangered Species Act. The NRC staff has also determined that the proposed action is not the type of activity that has the potential to cause effects on historic properties. Therefore, no further consultation is required under section 106 of the National Historic Preservation Act.

III. Finding of No Significant Impact

The NRC staff has prepared this EA in support of the proposed action. On the basis of this EA, the NRC finds that there are no significant environmental impacts from the proposed action, and that preparation of an environmental impact statement is not warranted. Accordingly, the NRC has determined that a Finding of No Significant Impact is appropriate.

IV. Further Information

Documents related to this action, including the application for license amendment and supporting documentation, are available electronically at the NRC's Electronic Reading Room at *http://www.nrc.gov/reading-rm/adams.html.* From this site, you can access the NRC's Agencywide Document Access and Management System (ADAMS), which provides text and image files of NRC's public documents. The documents related to this action are listed below, along with their ADAMS accession numbers.

1. NUREG–1757, ''Consolidated NMSS Decommissioning Guidance;''
2. Title 10, *Code of Federal Regulations,* part 20, subpart E, ''Radiological Criteria for License Termination;''
3. Title 10, *Code of Federal Regulations,* part 51, ''Environmental Protection Regulations for Domestic Licensing and Related Regulatory Functions;''
4. NUREG–1496, ''Generic Environmental Impact Statement in Support of Rulemaking on Radiological Criteria for License Termination of NRC–Licensed Nuclear Facilities;'' and
5. Termination Request and Final Survey dated May 1, 2009 (ML091390322).

If you do not have access to ADAMS, or if there are problems in accessing the documents located in ADAMS, contact the NRC Public Document Room (PDR) reference staff at 1–800–397–4209, 301–415–4737, or by e-mail to *pdr@nrc.gov.* These documents may also be viewed electronically on the public computers located at the NRC's PDR, O 1 F21, One White Flint North, 11555 Rockville Pike, Rockville, MD 20852. The PDR reproduction contractor will copy documents for a fee.

Dated at Region I, 475 Allendale Road, King of Prussia, PA this 7th day of August 2009.

For the Nuclear Regulatory Commission.

James P. Dwyer,

Chief, Commercial and R&D Branch, Division of Nuclear Materials Safety, Region I.

[FR Doc. E9–19653 Filed 8–14–09; 8:45 am]

BILLING CODE 7590–01–P

NUCLEAR REGULATORY COMMISSION

[NRC–2009–0356; Docket No. 040–00341]

Notice of Availability of Environmental Assessment and Finding of No Significant Impact for License Amendment to Source Materials License No. Stc–133, for Unrestricted Release of the Defense Logistics Agency's Curtis Bay Depot Facility In Baltimore, MD

AGENCY: Nuclear Regulatory Commission.

ACTION: Issuance of Environmental Assessment and Finding of No Significant Impact for License Amendment.

FOR FURTHER INFORMATION CONTACT: Steve Hammann, Health Physicist, Commercial and R&D Branch, Division of Nuclear Materials Safety, Region I, 475 Allendale Road, King of Prussia, Pennsylvania, 19406; telephone 610–337–5399; fax number 610–337–5269; or by e-mail: *stephen.hammann@nrc.gov.*

SUPPLEMENTARY INFORMATION:

I. Introduction

The U.S. Nuclear Regulatory Commission (NRC) is considering the issuance of a license amendment to Source Materials License No. STC–133. This license is held by Defense Logistics Agency (the Licensee), for its Curtis Bay Depot (the Facility), located at 710 Ordnance Road in Baltimore, Maryland. Issuance of the amendment would authorize release of the Facility for

unrestricted use. The Licensee requested this action in a letter dated February 3, 2006. The NRC has prepared an Environmental Assessment (EA) in support of this proposed action in accordance with the requirements of Title 10, *Code of Federal Regulations* (CFR), Part 51 (10 CFR Part 51). Based on the EA, the NRC has concluded that a Finding of No Significant Impact (FONSI) is appropriate with respect to the proposed action. The amendment will be issued to the Licensee following the publication of this FONSI and EA in the **Federal Register.**

II. Environmental Assessment

Identification of Proposed Action

The proposed action would approve the Licensee's February 3, 2006, license amendment request, resulting in release of the Facility for unrestricted use. License No. STC–133 was issued on February 14, 1957, pursuant to 10 CFR Part 40, and has been amended periodically since that time. This license authorized the Licensee to possess natural uranium and thorium mixtures as ores, concentrates, and solids for the purpose of storage, sampling, repackaging, and transfer for the activities of the National Defense Stockpile.

The Facility is situated on approximately 483 acres of grassy open areas and some lightly wooded areas and consists of various building pads, buildings and warehouses, some functional and others in a serious state of disrepair. A number of paved and dirt roads, along with railroad tracks, traverse the site. The Facility is located in an industrial area. Within the Facility, use of licensed materials was confined to buildings 1022, A–921, B–911, B–912, B–913, F–731, F–734, F–735, F–736, F–737, G–721, H–711, H–712, H–713, H–714, H–715, and the waste burial pit.

In May 2005, the Licensee ceased licensed activities and initiated a survey and decontamination of the Facility. The Licensee conducted surveys of the Facility and provided information to the NRC to demonstrate that it meets the criteria in Subpart E of 10 CFR Part 20 for unrestricted release.

Need for the Proposed Action

The Licensee has ceased conducting licensed activities at the Facility and seeks the unrestricted use of its Facility.

Environmental Impacts of the Proposed Action

The historical review of licensed activities conducted at the Facility shows that such activities involved use of the following licensed materials with half-lives greater than 120 days: thorium and uranium in the form of thorium nitrate, monazite sand, and sodium sulfate. Prior to performing the final status survey, the Licensee conducted decontamination activities, as necessary, in the areas of the Facility affected by these materials.

The Licensee conducted a final status survey which encompassed the entire facility. The final status survey report was attached to the Licensee's letter dated January 11, 2008. The Licensee elected to demonstrate compliance with the radiological criteria for unrestricted release as specified in 10 CFR 20.1402 by developing derived concentration guideline levels (DCGLs) for its Facility. The Licensee conducted site-specific dose modeling using input parameters specific to the Facility that adequately bounded the potential dose. This included dose modeling for two scenarios: building surfaces and soil. The building surface dose model was based on the warehouse worker scenario and the soil dose modeling was based on a resident farmer scenario. The Licensee thus determined the maximum amount of residual radioactivity on building surfaces, equipment, materials, and soils that will satisfy the NRC requirements in Subpart E of 10 CFR Part 20 for unrestricted release. The NRC previously reviewed the Licensee's methodology and proposed DCGLs and concluded that the proposed DCGLs are acceptable for use as release criteria at the Facility. The NRC's approval of the Licensee's proposed DCGLs was published in the **Federal Register** on June 22, 2007. The Licensee's final status survey results were below these DCGLs and are thus acceptable.

The NRC staff conducted confirmatory surveys on April 3–4, 2007; May 3, 2007; July 11, 2007, and November 30, 2007. None of the confirmatory sample results exceeded the DCGLs established for the Facility. Based on its review, the staff has determined that the affected environment and any environmental impacts associated with the proposed action are bounded by the impacts evaluated by the ''Generic Environmental Impact Statement in Support of Rulemaking on Radiological Criteria for License Termination of NRC–Licensed Nuclear Facilities'' (NUREG–1496) Volumes 1–3 (ML042310492, ML042320379, and ML042330385). The Licensee also considered and appropriately accounted for the dose contribution from previous site releases. The staff finds there were no significant environmental impacts from the use of radioactive material at the Facility. The NRC staff reviewed the docket file records and the final status survey report to identify any non-radiological hazards that may have impacted the environment surrounding the Facility. No such hazards or impacts to the environment were identified. The NRC has identified no other radiological or non-radiological activities in the area that could result in cumulative environmental impacts.

The NRC staff finds that the proposed release of the Facility for unrestricted use and the termination of the NRC materials license is in compliance with 10 CFR 20.1402, including the impact of residual radioactivity at previously-released site locations of use. Based on its review, the staff considered the impact of the residual radioactivity at the Facility and concluded that the proposed action will not have a significant effect on the quality of the human environment.

Environmental Impacts of the Alternatives to the Proposed Action

Due to the largely administrative nature of the proposed action, its environmental impacts are small. Therefore, the only alternative the staff considered is the no-action alternative, under which the staff would leave things as they are by simply denying the amendment request. This no-action alternative is not feasible because it conflicts with 10 CFR 40.42(d), requiring that decommissioning of source material facilities be completed and approved by the NRC after licensed activities cease. The NRC's analysis of the Licensee's final status survey data confirmed that the Facility meets the requirements of 10 CFR 20.1402 for unrestricted release. Additionally, denying the amendment request would result in no change in current environmental impacts. The environmental impacts of the proposed action and the no-action alternative are therefore similar, and the no-action alternative is accordingly not further considered.

Conclusion

The NRC staff has concluded that the proposed action is consistent with the NRC's unrestricted release criteria specified in 10 CFR 20.1402. Because the proposed action will not significantly impact the quality of the human environment, the NRC staff concludes that the proposed action is the preferred alternative.

Agencies and Persons Consulted

NRC provided a draft of this Environmental Assessment to the Maryland Department of the

Environment for review on June 19, 2009. On July 23, 2009, the Maryland Department of the Environment responded by e-mail. The State agreed with the conclusions of the EA and otherwise had no comments.

The NRC staff has determined that the proposed action is of a procedural nature, and will not affect listed species or critical habitat. Therefore, no further consultation is required under Section 7 of the Endangered Species Act. The NRC staff has also determined that the proposed action is not the type of activity that has the potential to cause effects on historic properties. Therefore, no further consultation is required under Section 106 of the National Historic Preservation Act.

III. Finding of No Significant Impact

The NRC staff has prepared this EA in support of the proposed action. On the basis of this EA, the NRC finds that there are no significant environmental impacts from the proposed action, and that preparation of an environmental impact statement is not warranted. Accordingly, the NRC has determined that a Finding of No Significant Impact is appropriate.

IV. Further Information

Documents related to this action, including the application for license amendment and supporting documentation, are available electronically at the NRC's Electronic Reading Room at *http://www.nrc.gov/reading-rm/adams.html.* From this site, you can access the NRC's Agencywide Documents Access and Management System (ADAMS), which provides text and image files of NRC's public documents. The documents related to this action are listed below, along with their ADAMS accession numbers.

1. NUREG–1757, ''Consolidated NMSS Decommissioning Guidance''
2. Title 10 Code of *Federal Regulations*, Part 20, Subpart E, ''Radiological Criteria for License Termination''
3. Title 10, Code of *Federal Regulations*, Part 51, ''Environmental Protection Regulations for Domestic Licensing and Related Regulatory Functions''
4. NUREG–1496, ''Generic Environmental Impact Statement in Support of Rulemaking on Radiological Criteria for License Termination of NRC–Licensed Nuclear Facilities''
5. Submittal Letter dated February 3, 2006: ML060580094.
6. Historical Site Assessment: ML060580564.
7. Preliminary Site Specific Derived Concentration Guidelines: ML060580566.
8. Radiological Scoping Survey: ML060580581.
9. Environmental Assessment, Disposition of Thorium Nitrate: ML060580592.
10. Request for Additional Information dated June 12, 2006: ML061640494.
11. Deficiency Response Letter dated July 5, 2006: ML061870570.
12. Deficiency Response Letter dated August 8, 2006: ML062290404.
13. Characterization Survey Report: ML062650300.
14. Decommissioning/Remediation Plan: ML062760618.
15. Receipt of Decommissioning Plan: ML062930051.
16. **Federal Register** Notice of Consideration: ML070230235.
17. Request For Additional Information dated December 11, 2009: ML083460027.
18. Deficiency Response Letter dated May 19, 2009: ML091410338.

If you do not have access to ADAMS, or if there are problems in accessing the documents located in ADAMS, contact the NRC Public Document Room (PDR) Reference staff at 1–800–397–4209, 301–415–4737, or by e-mail to *pdr@nrc.gov.* These documents may also be viewed electronically on the public computers located at the NRC's PDR, O 1 F21, One White Flint North, 11555 Rockville Pike, Rockville, MD 20852. The PDR reproduction contractor will copy documents for a fee.

Dated at Region I, 475 Allendale Road, King of Prussia, PA, this 7th day of August 2009.

For the Nuclear Regulatory Commission.

James P. Dwyer,

Chief, Commercial and R&D Branch, Division of Nuclear Materials Safety, Region I.

[FR Doc. E9–19648 Filed 8–14–09; 8:45 am]

BILLING CODE 7590–01–P

NUCLEAR REGULATORY COMMISSION

[NRC–2008–0500]

License Renewal Interim Staff Guidance LR–ISG–2007–01: License Renewal Interim Staff Guidance Process, Revision 1; Notice of Availability

AGENCY: Nuclear Regulatory Commission (NRC).

ACTION: Notice of availability.

SUMMARY: The NRC is issuing the final License Renewal Interim Staff Guidance (LR–ISG) LR–ISG–2007–01, ''License Renewal Interim Staff Guidance Process, Revision 1'' (revised LR–ISG process). This process describes the basic framework for developing and implementing interim changes to certain NRC license renewal guidance documents. These documents facilitate the implementation of and NRC staff review of license renewal applications submitted in accordance with Title 10 of the Code of Federal Regulations (10 CFR), Part 54, ''Requirements for Renewal of Operating Licenses for Nuclear Power Plants,'' and Part 51, ''Environmental Protection Regulations for Domestic Licensing and Related Regulatory Functions'' of 10 CFR. The revised LR–ISG process supersedes the existing process issued on December 12, 2003, entitled, ''Process for Interim Staff Guidance.'' An electronic copy of the revised LR–ISG process is available in the NRC's Agencywide Documents Access and Management System (ADAMS) under Accession No. ML091950069.

FOR FURTHER INFORMATION CONTACT: Mr. Matthew Homiack, Division of License Renewal, Office of Nuclear Reactor Regulation, U.S. Nuclear Regulatory Commission, Washington, DC 20555–0001; telephone 301–415–1683; or e-mail *Matthew.Homiack@nrc.gov.*

ADDRESSES: Documents created or received after November 1, 1999, are available electronically at the NRC's Public Electronic Reading Room on the Internet at *http://www.nrc.gov/reading-rm/adams.html.* From this site, the public can gain entry into ADAMS. If you do not have access to the Internet or if there are any problems in accessing the documents located in ADAMS, contact the NRC Public Document Room reference staff at 1–800–397–4209, 301–415–4737, or by e-mail at *PDR.Resource@nrc.gov.*

The NRC posts LR–ISGs on its public Web page under the ''License Renewal'' heading at *http://www.nrc.gov/reading-rm/doc-collections/isg.*

SUPPLEMENTARY INFORMATION:

Background

On December 12, 2003, the NRC staff issued a document entitled, ''Process for Interim Staff Guidance'' (ML023520620), which is Revision 0 of the LR–ISG process (previous LR–ISG process). This document, developed with input from stakeholders, describes a process under which the NRC staff may evaluate proposed changes to certain license renewal guidance documents and then, if warranted, implement a guidance document change through issuance of an LR–ISG. In this

way, guidance addressing new insights, lessons learned, and emergent issues may be issued without the NRC staff needing to publish a complete license renewal guidance document revision. Approved LR–ISGs are eventually incorporated into a formal guidance document revision; however, until publication of such a revision, the NRC staff will review license renewal applications in accordance with the LR–ISG and stakeholders may use the LR–ISG as they deem appropriate. Under the LR–ISG process, the NRC staff or stakeholders may propose changes to certain license renewal guidance documents. The process provides for interactions with stakeholders during LR–ISG development and the NRC staff provides the opportunity for public comment on each proposed LR–ISG through notices published in the **Federal Register**.

In 2007, the NRC staff created LR–ISG–2007–01 for updating the actual LR–ISG process. The NRC staff identified the need to revise the process to reflect issuance of revised license renewal guidance documents in September 2005. The NRC staff also identified the need to extend the process to facilitate the development and implementation of changes to NRC guidance documents associated with the environmental review of license renewal applications under 10 CFR Part 51. The need to make administrative changes to the LR–ISG process, such as references to the current NRC organizational structure, was also identified.

On September 6, 2007, the NRC's Office of the Inspector General (OIG) issued OIG–07–A–15, ''Audit of the NRC's License Renewal Program'' (ML072490486). In its audit, the OIG identified an area for improving the LR–ISG process. Concerning evaluation of NRC staff positions in LR–ISGs for backfit application, in page 56 of its report, the OIG stated that, ''* * * there is no documented means to determine whether [LR–ISGs] have met the provisions in 10 CFR 54.37(b) and thereby not subject to backfitting.'' Consequently, OIG recommended that the NRC, ''Establish a review process to determine whether or not Interim Staff Guidance meets the provisions of 10 CFR 54.37(b), and document accordingly.'' The NRC staff agreed with the OIG's recommendation and, accordingly, decided to make revisions to the LR–ISG process.

On March 26, 2009, the NRC staff published in the **Federal Register**, 74 FR 13272, a request for public comment on a proposed LR–ISG process revision (ML082180346). This document was issued as draft LR–ISG–2007–01. In this notice the NRC staff also requested comment on a proposed revision to NRC Regulatory Issue Summary (RIS) 2007–16, ''Implementation of the Requirements of 10 CFR 54.37(b) for Holders of Renewed Licenses.'' The NRC staff proposed changes to the RIS to clarify the role of the LR–ISG process for including ''newly identified'' systems, structures, and components in accordance with 10 CFR 54.37(b).

As published in the **Federal Register**, 74 FR 19109, on April 27, 2009, the NRC staff granted an extension to the public comment period at the request of the Nuclear Energy Institute (NEI). As to the basis for granting this request, the NRC staff agreed with NEI that discussions during a public meeting on April 29, 2009, could be beneficial to allow stakeholders to better prepare comments on the proposed LR–ISG process revision and RIS. In addition, the NRC staff believed that receipt of comments informed by discussions at the meeting would be beneficial in finalizing the two documents.

During the public meeting at NRC headquarters on April 29, 2009, the proposed LR–ISG process revision and revision of RIS 2007–16 were discussed. NEI representatives provided comments; however, no other stakeholder provided comments or asked questions. The discussions are summarized in a document entitled, ''Summary of the License Renewal Meeting between the U.S. Nuclear Regulatory Commission Staff and the Nuclear Energy Institute,'' dated May 26, 2009 (ML091310269).

The extended comment period ended on May 27, 2009. By letter of the same date, the NRC received comments from NEI (ML091540208). No other comments were received. The NRC staff has considered NEI's comments from its letter dated May 27, 2009, and from the April 29, 2009, public meeting in developing the revised LR–ISG process. These comments and the NRC staff's responses are discussed in the Comments and Responses section of this notice.

Final Action

By this action, the NRC is issuing the revised LR–ISG process as final LR–ISG–2007–01. The NRC staff will now use this process to guide the development and implementation of LR–ISGs. Below the NRC staff describes the more significant changes made to the previous LR–ISG process.

(1) The LR–ISG process is extended to cover the evaluation and implementation of interim guidance concerning certain guidance documents associated with the staff's environmental review of license renewal applications under 10 CFR Part 51. These documents are NRC Regulatory Guide (RG) 4.2, Supplement 1, ''Preparation of Supplemental Environmental Reports for Applications to Renew Nuclear Power Plant Operating Licenses,'' dated September 2000 (ML003710495), and NUREG–1555, ''Environmental Standard Review Plan,'' Supplement 1, ''Operating License Renewal,'' dated March 2000 (ML003702019).

(2) The LR–ISG process is revised to specify that the NRC staff will evaluate and document its determinations as to whether LR–ISGs meet the provisions of 10 CFR 54.37(b). The LR–ISG process is also augmented to focus on evaluation and documentation of the NRC staff's backfitting evaluation of LR–ISGs under 10 CFR 50.109. These improvements address the OIG recommendation.

(3) The NRC staff has eliminated the former ''clarification'' and ''compliance'' LR–ISG designations. As an alternative, the NRC staff will document in a backfitting discussion section of each LR–ISG the determinations and bases as to the applicability of 10 CFR 54.37(b) and 10 CFR 50.109.

(4) The LR–ISG process is revised to reflect the September 2005 publication of these revised safety license renewal guidance documents: NUREG–1800, Revision 1, ''Standard Review Plan for Review of License Renewal Applications for Nuclear Power Plants'' (ML052770566), NUREG–1801, Revision 1, Volumes 1 and 2, ''Generic Aging Lessons Learned (GALL) Report'' (ML052770419 and ML052780376), and NRC Regulatory Guide 1.188, Revision 1, ''Standard Format and Content for Applications to Renew Nuclear Power Plant Operating Licenses'' (ML051920430).

Comments and Responses

In response to the request for public comment published in the **Federal Register**, 74 FR 13272, NEI provided comments on both the proposed LR–ISG process revision and proposed revision to RIS 2007–16. The NRC staff plans to issue the final revision to RIS 2007–16 separately from the LR–ISG process. As such, this notice only addresses comments that the NRC staff has determined to be applicable to the proposed LR–ISG process revision. Also, NEI's comments from the April 29, 2009, public meeting are consistent with those provided in its May 27, 2009 letter. These comments are identified by number in the NEI's letter. The NRC staff's responses to each comment follow.

(1) NEI's first comment addresses the proposed revision to RIS 2007–16. The NRC staff is addressing this comment in the revision to RIS 2007–16, which is planned to be issued separately.

(2) NEI commented that it agrees with the NRC staff's proposed change to RIS 2007–16 to include a backfit review of all LR–ISG documents under 10 CFR 50.109. However, NEI further commented, this addition of backfit review for LR–ISGs should have no impact on implementation or interpretation of 10 CFR 54.37(b). The NRC staff agrees with NEI's comment and no changes have been made from the proposed LR–ISG process revision. The revised LR–ISG process contains the framework for developing and implementing LR–ISGs, including provisions for determining whether 10 CFR 54.37(b) and 10 CFR 50.109 apply to an LR–ISG, and according documentation. The LR–ISG process references RIS 2007–16, which provides guidance on interpretation and licensee implementation of 10 CFR 54.37(b).

NEI also commented that it agrees with the NRC staff's proposed change to extend the LR–ISG process to include environmental review issues. As such, the NRC staff has made no changes to the proposed LR–ISG process revision.

(3) NEI recommended that the NRC consider splitting RIS 2007–16 into two separate documents, one on implementation of 10 CFR 54.37(b) and the other on the LR–ISG process, including the requirement for backfit analysis for proposed LR–ISGs. The NRC staff agrees with NEI's recommendation that the documents are separate. The two documents are the revised LR–ISG process and RIS 2007–16. The NRC staff intends for the focus of these two documents to be as described in the response to the previous comment.

In its comments, NEI also suggested that the NRC include the requirement for ''backfit analysis'' for LR–ISGs. The NRC staff would like to clarify that, as described in the proposed LR–ISG process revision, the NRC staff will perform a backfitting review of LR–ISGs; however, the NRC staff will only prepare a backfitting analysis in certain cases, which is consistent with the requirements of 10 CFR 50.109. If, as a result of its backfitting review, the NRC staff determines that an LR–ISG constitutes backfitting, as defined in 10 CFR 50.109(a)(1), then a backfitting analysis is required to demonstrate that backfitting is necessary because it constitutes a substantial increase in protection to public health and safety or the common defense and security, and the cost is justified in light of the substantial increase. If an LR–ISG constitutes backfitting, but one or more of the exceptions in 10 CFR 50.109(a)(4)(i) through (iii) apply, then a backfitting analysis is not required, but the NRC staff is required to prepare a documented backfitting evaluation.

(4) NEI commented that the NRC deleted from RIS 2007–16, Revision 0, NRC's agreement to inform renewed license holders of new LR–ISGs and to inform the industry of ''newly identified'' SSCs. NEI suggested that this information could be added to Section 4.2.4 of the LR–ISG process. NEI indicated that this information is valuable to licensees and requested that the NRC staff retain the expectation to communicate it.

The NRC staff agrees with NEI's comment to include this information in Section 4.2.4 of the LR–ISG process. Accordingly, the revised LR–ISG process states that when an LR–ISG constitutes backfitting under 10 CFR 50.109, or communicates ''newly-identified'' SSCs under the provisions of 10 CFR 54.37(b), the NRC staff will notify applicable renewed license holders as appropriate, for example, by issuing letters or a generic communication. The NRC staff will continue to make draft and final LR–ISGs publicly available, and notices of availability or the opportunity to provide comments will be published in the **Federal Register**. Electronic copies of draft and final LR–ISGs will be made available on the NRC's public Web site.

Dated at Rockville, Maryland, this 7th day of August, 2009.

For the Nuclear Regulatory Commission.

Samson S. Lee,

Deputy Director, Division of License Renewal, Office of Nuclear Reactor Regulation.

[FR Doc. E9–19646 Filed 8–14–09; 8:45 am]

BILLING CODE 7590–01–P

NUCLEAR REGULATORY COMMISSION

Sunshine Federal Register Notice

AGENCY HOLDING THE MEETINGS: Nuclear Regulatory Commission.

DATES: Week of August 10, 2009.

PLACE: Commissioners' Conference Room, 11555 Rockville Pike, Rockville, Maryland.

STATUS: Public and closed.

Additional Items to be considered:

Week of August 10, 2009

Thursday, August 13, 2009

1:25 p.m.

Affirmation Session (Public Meeting) (Tentative).

Pa'ina Hawaii, LLC (Materials License Application)—Applicant's Motion to Transfer Case to the Commission (Tentative).

*The schedule for Commission meetings is subject to change on short notice. To verify the status of meetings, call (recording)—(301) 415–1292. Contact person for more information: Rochelle Bavol, (301) 415–1651.

Additional Information

By a vote of 3–0 on August 11, 2009, the Commission determined pursuant to U.S.C. 552b(e) and § 9.107(a) of the Commission's rules that Affirmation of Pa'ina Hawaii, LLC (Materials License Application)—Applicant's Motion to Transfer Case to the Commission (Tentative) be held August 13, 2009, and on less than one week's notice to the public.

The NRC Commission Meeting Schedule can be found on the Internet at: *http://www.nrc.gov/about-nrc/policy-making/schedule.html.*

The NRC provides reasonable accommodation to individuals with disabilities where appropriate. If you need a reasonable accommodation to participate in these public meetings, or need this meeting notice or the transcript or other information from the public meetings in another format (*e.g.,* braille, large print), please notify the NRC's Disability Program Coordinator, Rohn Brown, at 301–492–2279, TDD: 301–415–2100, or by e-mail at *rohn.brown@nrc.gov.* Determinations on requests for reasonable accommodation will be made on a case-by-case basis.

This notice is distributed electronically to subscribers. If you no longer wish to receive it, or would like to be added to the distribution, please contact the Office of the Secretary, Washington, DC 20555 (301–415–1969), or send an e-mail to darlene.wright@nrc.gov.

Dated: August 12, 2009.

Rochelle C. Bavol,

Office of the Secretary.

[FR Doc. E9–19746 Filed 8–13–09; 4:15 pm]

BILLING CODE 7590–01–P

SMALL BUSINESS ADMINISTRATION

Disaster Declaration #11694 and #11695; North Dakota Disaster Number ND–00015

AGENCY: U.S. Small Business Administration.

ACTION: Amendment 3.

SUMMARY: This is an amendment of the Presidential declaration of a major disaster for Public Assistance Only for

the State of North Dakota (FEMA–1829–DR), dated 03/24/2009.

Incident: Severe storms and flooding.

Incident Period: 03/13/2009 through 08/10/2009.

Effective Date: 08/10/2009.

Physical Loan Application Deadline Date: 05/26/2009.

Economic Injury (EIDL) Loan Application Deadline Date: 12/24/2009.

ADDRESSES: Submit completed loan applications to: U.S. Small Business Administration, Processing and Disbursement Center, 14925 Kingsport Road, Fort Worth, TX 76155.

FOR FURTHER INFORMATION CONTACT: A. Escobar, Office of Disaster Assistance, U.S. Small Business Administration, 409 3rd Street, SW., Suite 6050, Washington, DC 20416.

SUPPLEMENTARY INFORMATION: The notice of the President's major disaster declaration for Private Non-Profit organizations in the State of North Dakota, dated 03/24/2009, is hereby amended to establish the incident period for this disaster as beginning 03/13/2009 and continuing through 08/10/2009.

All other information in the original declaration remains unchanged.

(Catalog of Federal Domestic Assistance Numbers 59002 and 59008)

James E. Rivera,

Acting Associate Administrator for Disaster Assistance.

[FR Doc. E9–19629 Filed 8–14–09; 8:45 am]

BILLING CODE 8025–01–P

SMALL BUSINESS ADMINISTRATION

[Disaster Declaration #11837 and #11838]

Nebraska Disaster Number NE–00027

AGENCY: U.S. Small Business Administration.

ACTION: Amendment 1.

SUMMARY: This is an amendment of the Presidential declaration of a major disaster for Public Assistance Only for the State of Nebraska (FEMA–1853–DR), dated 07/31/2009.

Incident: Severe storms, tornadoes, and flooding.

Incident Period: 06/05/2009 through 06/26/2009.

Effective Date: 08/10/2009.

Physical Loan Application Deadline Date: 09/29/2009.

Economic Injury (EIDL) Loan Application Deadline Date: 05/03/2010.

ADDRESSES: Submit completed loan applications to: U.S. Small Business Administration, Processing and Disbursement Center, 14925 Kingsport Road, Fort Worth, TX 76155.

FOR FURTHER INFORMATION CONTACT: A. Escobar, Office of Disaster Assistance, U.S. Small Business Administration, 409 3rd Street, SW., Suite 6050, Washington, DC 20416.

SUPPLEMENTARY INFORMATION: The notice of the President's major disaster declaration for Private Non-Profit organizations in the State of Nebraska, dated 07/31/2009, is hereby amended to include the following areas as adversely affected by the disaster.

Primary Counties: Chase, Deuel, Lincoln, Perkins.

All other information in the original declaration remains unchanged.

(Catalog of Federal Domestic Assistance Numbers 59002 and 59008)

James E. Rivera,

Acting Associate Administrator for Disaster Assistance.

[FR Doc. E9–19631 Filed 8–14–09; 8:45 am]

BILLING CODE 8025–01–P

SMALL BUSINESS ADMINISTRATION

[Disaster Declaration #11707 and #11708]

North Dakota Disaster Number ND–00016

AGENCY: U.S. Small Business Administration.

ACTION: Amendment 5.

SUMMARY: This is an amendment of the Presidential declaration of a major disaster for the State of North Dakota (FEMA—1829—DR), dated 04/10/2009.

Incident: Severe storms and flooding.

Incident Period: 03/13/2009 and continuing through 08/10/2009.

DATES: *Effective Date:* 08/10/2009.

Physical Loan Application Deadline Date: 08/10/2009.

EIDL Loan Application Deadline Date: 01/11/2010.

ADDRESSES: Submit completed loan applications to: U.S. Small Business Administration, Processing and Disbursement Center, 14925 Kingsport Road, Fort Worth, TX 76155.

FOR FURTHER INFORMATION CONTACT: A. Escobar, Office of Disaster Assistance, U.S. Small Business Administration, 409 3rd Street, SW., Suite 6050, Washington, DC 20416.

SUPPLEMENTARY INFORMATION: The notice of the President's major disaster declaration for the State of North Dakota, dated 04/10/2009 is hereby amended to establish the incident period for this disaster as beginning 03/13/2009 and continuing through 08/10/2009.

All other information in the original declaration remains unchanged.

(Catalog of Federal Domestic Assistance Numbers 59002 and 59008)

James E. Rivera,

Acting Associate Administrator for Disaster Assistance.

[FR Doc. E9–19632 Filed 8–14–09; 8:45 am]

BILLING CODE 8025–01–P

SECURITIES AND EXCHANGE COMMISSION

[Release No. IC–28845; File No. 812–13680]

GE Asset Management Incorporated and GE Investment Distributors, Inc.; Notice of Application and Temporary Order

August 11, 2009.

AGENCY: Securities and Exchange Commission (''Commission'').

ACTION: Temporary order and notice of application for a permanent order under section 9(c) of the Investment Company Act of 1940 (''Act'').

Summary of Application: Applicants have received a temporary order exempting them from section 9(a) of the Act, with respect to an injunction entered against General Electric Company (''GE'') on August 11, 2009 by the United States District Court for the District of Connecticut (''Injunction''), until the Commission takes final action on an application for a permanent order. Applicants also have applied for a permanent order.

Applicants: GE Asset Management Incorporated (''GEAM'') and GE Investment Distributors, Inc. (''GEID'', collectively with GEAM, the ''Applicants'').[1]

Filing Date: The application was filed on August 4, 2009, and amended on August 11, 2009.

Hearing or Notification of Hearing: An order granting the application will be issued unless the Commission orders a hearing. Interested persons may request a hearing by writing to the Commission's Secretary and serving Applicants with a copy of the request, personally or by mail. Hearing requests should be received by the Commission by 5:30 p.m. on September 8, 2009, and should be accompanied by proof of service on Applicants, in the form of an affidavit, or for lawyers, a certificate of service. Hearing requests should state the nature of the writer's interest, the reason for the request, and the issues contested. Persons who wish to be

[1] Applicants request that any relief granted pursuant to the application also apply to any other company of which GE is or may become an affiliated person (together with the Applicants, the ''Covered Persons'').

notified of a hearing may request notification by writing to the Commission's Secretary.

ADDRESSES: Secretary, U.S. Securities and Exchange Commission, 100 F Street, NE., Washington, DC 20549–1090; Applicants: 3001 Summer Street, Stamford, CT 06904–7900.

FOR FURTHER INFORMATION CONTACT: Courtney S. Thornton, at (202) 551–6812, or Mary Kay Frech, Branch Chief, at (202) 551–6821, (Division of Investment Management, Office of Investment Company Regulation).

SUPPLEMENTARY INFORMATION: The following is a temporary order and a summary of the application. The complete application may be obtained via the Commission's Web site by searching for the file number, or an applicant using the Company name box, at *http://www.sec.gov/search/search.htm,* or by calling (202) 551–8090.

Applicants' Representations

1. GE is a large diversified technology, media, and financial services company. GEAM, a Delaware corporation, is a direct, wholly-owned subsidiary of GE. GEAM is registered as an investment adviser under the Investment Advisers Act of 1940 and serves as investment adviser to a number of registered investment companies (''Funds''), including employees' securities companies (''ESCs'').[2] GEID is, through GEAM, an indirect, wholly-owned subsidiary of GE. GEID is registered as a broker-dealer under the Securities Exchange Act of 1934 and is a member of the Financial Industry Regulatory Authority, Inc. GEID serves as principal underwriter to a number of Funds.

2. On August 11, 2009, the United States District Court for the District of Connecticut entered a final judgment, which included the Injunction, against GE (''Judgment'') in a matter brought by the Commission.[3] The Commission alleged in the complaint (''Complaint'') that, in 2002 and 2003, high level GE accounting executives or other finance personnel approved accounting that was not in compliance with generally accepted accounting principles so as to increase earnings or revenues or to avoid reporting negative financial results. Without admitting or denying the allegations in the Complaint, except as to jurisdiction, GE consented to the entry of the Judgment that included, among other things, the entry of the Injunction, and a civil penalty of $50 million.

Applicants' Legal Analysis

1. Section 9(a)(2) of the Act, in relevant part, prohibits a person who has been enjoined from, among other things, engaging in or continuing any conduct or practice in connection with the purchase or sale of a security, or in connection with activities as an underwriter, broker or dealer, from acting, among other things, as an investment adviser or depositor of any registered investment company or a principal underwriter for any registered open-end investment company, registered unit investment trust or registered face-amount certificate company. Section 9(a)(3) of the Act makes the prohibition in section 9(a)(2) applicable to a company, any affiliated person of which has been disqualified under the provisions of section 9(a)(2). Section 2(a)(3) of the Act defines ''affiliated person'' to include, among others, any person directly or indirectly controlling, controlled by, or under common control with, the other person. Applicants state that GE is an affiliated person of each of the Applicants within the meaning of section 2(a)(3) of the Act. Applicants state that the entry of the Injunction results in Applicants being subject to the disqualification provisions of section 9(a) of the Act.

2. Section 9(c) of the Act provides that the Commission shall grant an application for exemption from the disqualification provisions of section 9(a) if it is established that these provisions, as applied to the applicants, are unduly or disproportionately severe or that the applicants' conduct has been such as not to make it against the public interest or the protection of investors to grant the exemption. Applicants have filed an application pursuant to section 9(c) seeking a temporary and permanent order exempting them and other Covered Persons from the disqualification provisions of section 9(a) of the Act.

3. Applicants believe they meet the standard for exemption specified in section 9(c). Applicants state that the prohibitions of section 9(a) as applied to them would be unduly and disproportionately severe and that the conduct of the Applicants has been such as not to make it against the public interest or the protection of investors to grant the exemption from section 9(a).

4. Applicants state that the alleged conduct giving rise to the Injunction did not involve either of the Applicants acting in the capacity of investment adviser, subadviser or depositor for any Fund or as principal underwriter for any Fund, and no such Funds bought or held any securities issued by GE during the period of misconduct alleged in the Complaint, other than with respect to index funds. Applicants also state that none of the current or former directors, officers, or employees of the Applicants had any responsibility for, or involvement in, the violative conduct alleged in the Complaint. Applicants further state that the personnel at GE who had any responsibility for, or involvement in, the violations alleged in the Complaint have had no, and will not have any future, involvement in providing investment advisory, subadvisory, or underwriting services to the Funds.

5. Applicants state that their inability to continue to provide investment advisory, subadvisory and underwriting services to the Funds would result in potential hardship for the Funds and their shareholders. Applicants state that they will, as soon as reasonably practical, distribute written materials, including an offer to meet in person to discuss the materials, to the boards of directors of the Funds (''Boards'') for which the Applicants serve as investment adviser, investment subadviser or principal underwriter, including the directors who are not ''interested persons,'' as defined in section 2(a)(19) of the Act, of such Funds, and their independent legal counsel as defined in rule 0–1(a)(6) under the Act, relating to the circumstances that led to the Injunction, any impact on the Funds, and the application. Applicants state they will provide the Boards with all information concerning the Judgment and the application that is necessary for the Funds to fulfill their disclosure and other obligations under the Federal securities laws.

6. Applicants also state that, if they were barred from providing services to the Funds, the effect on their businesses and employees would be severe. Applicants state that they have committed substantial resources to establishing expertise in providing advisory and distribution services to Funds. Applicants further state that prohibiting them from providing such services would not only adversely affect their businesses, but would also adversely affect about 500 employees who are involved in those activities.

7. A predecessor of one of the Applicants previously received an exemption under section 9(c) as the result of conduct that triggered section

[2] The ESCs, as defined in section 2(a)(13) of the Act, are open-end management investment companies registered under the Act and provide investment opportunities for certain employees, officers, and directors of GEAM and its affiliates, and other eligible participants.

[3] *Securities and Exchange Commission* v. *General Electric Company,* Final Judgment as to General Electric Company, 3:09 CV 1235 (RNC) (D. Conn. Aug. 11, 2009).

9(a), as described in greater detail in the application.

Applicants' Condition

Applicants agree that any order granting the requested relief will be subject to the following condition:

Any temporary exemption granted pursuant to the application shall be without prejudice to, and shall not limit the Commission's rights in any manner with respect to, any Commission investigation of, or administrative proceedings involving or against, Covered Persons, including, without limitation, the consideration by the Commission of a permanent exemption from section 9(a) of the Act requested pursuant to the application or the revocation or removal of any temporary exemptions granted under the Act in connection with the application.

Temporary Order

The Commission has considered the matter and finds that Applicants have made the necessary showing to justify granting a temporary exemption.

Accordingly,

It is hereby ordered, pursuant to section 9(c) of the Act, that GEAM and GEID and any other Covered Persons are granted a temporary exemption from the provisions of section 9(a), solely with respect to the Injunction, subject to the condition in the application, from August 11, 2009, until the Commission takes final action on their application for a permanent order.

By the Commission.

Elizabeth M. Murphy,

Secretary.

[FR Doc. E9–19625 Filed 8–14–09; 8:45 am]

BILLING CODE 8010–01–P

SECURITIES AND EXCHANGE COMMISSION

Sunshine Act Meeting

Notice is hereby given, pursuant to the provisions of the Government in the Sunshine Act, Public Law 94–409, that the Securities and Exchange Commission will hold a Closed Meeting on Thursday, August 20, 2009 at 2 p.m.

Commissioners, Counsel to the Commissioners, the Secretary to the Commission, and recording secretaries will attend the Closed Meeting. Certain staff members who have an interest in the matters also may be present.

The General Counsel of the Commission, or his designee, has certified that, in his opinion, one or more of the exemptions set forth in 5 U.S.C. 552b(c)(3), (5), (7), 9(B) and (10) and 17 CFR 200.402(a)(3), (5), (7), 9(ii) and (10), permit consideration of the scheduled matters at the Closed Meeting.

Chairman Schapiro, as duty officer, voted to consider the items listed for the Closed Meeting in a closed session.

The subject matter of the Closed Meeting scheduled for Thursday, August 20, 2009 will be:

Institution and settlement of injunctive actions;

Institution and settlement of administrative proceedings; and

Other matters relating to enforcement proceedings.

At times, changes in Commission priorities require alterations in the scheduling of meeting items.

For further information and to ascertain what, if any, matters have been added, deleted or postponed, please contact: The Office of the Secretary at (202) 551–5400.

Dated: August 13, 2009.

Elizabeth M. Murphy,

Secretary.

[FR Doc. E9–19798 Filed 8–13–09; 4:15 pm]

BILLING CODE 8010–01–P

SECURITIES AND EXCHANGE COMMISSION

[Release No. 34–60459; File No. SR–Phlx–2009–54]

Self-Regulatory Organizations; NASDAQ OMX PHLX, Inc.; Order Approving a Proposed Rule Change To Establish Fees for the Top of Phlx Options Direct Data Feed Product

August 7, 2009.

I. Introduction

On June 30, 2009, NASDAQ OMX PHLX, Inc. (''Phlx'' or ''Exchange'') filed with the Securities and Exchange Commission (''Commission''), pursuant to Section 19(b)(1) of the Securities Exchange Act of 1934 (''Act'') [1] and Rule 19b-4 thereunder,[2] a proposed rule change to amend its fee schedule by establishing subscriber fees for a direct data product related to the trading of standardized options on the Exchange's enhanced electronic trading platform for options, Phlx XL II.[3] Notice of the proposed rule change was published for comment in the **Federal Register** on July 8, 2009.[4] The Commission received no comments on the proposal. This order approves the proposed rule change.

II. Description of the Proposal

In conjunction with the launch and rollout of its Phlx XL II system, the Exchange is developing Top of Phlx Options (''TOPO''), a direct data feed product that includes the Exchange's best bid and offer price, with aggregate size, based on displayable order and quoting interest on the Phlx XL II system. The data contained in the TOPO data feed is identical to the data sent to the processor for the Options Price Regulatory Authority (''OPRA''), and the TOPO and OPRA data will leave the Phlx XL II System at the same time.

In coordination with the projected completion of the rollout of the Phlx XL II system, the Exchange proposes to charge monthly fees to distributors, beginning August 1, 2009, for use of TOPO.[5] The monthly ''Distributor Fee'' charged will depend on whether the distributor is an ''Internal Distributor'' or an ''External Distributor.'' [6] Specifically, the Exchange proposed to charge Internal Distributors a monthly fee of $2,000 per organization and to charge External Distributors a monthly fee of $2,500 per organization.

III. Discussion and Commission Findings

After careful review, the Commission finds that the proposed rule change is consistent with the requirements of the Act and the rules and regulations thereunder applicable to a national securities exchange.[7] In particular, the Commission finds that the proposed rule change is consistent with the requirements of Section 6(b)(4) of the Act,[8] which requires that the rules of a national securities exchange provide for the equitable allocation of reasonable dues, fees and other charges among members and issuers and other persons using its facilities, and Section 6(b)(5) of

[1] 15 U.S.C. 78s(b)(1).

[2] 17 CFR 240.19b–4.

[3] *See* Securities Exchange Act Release No. 59995 (May 28, 2009), 74 FR 26750 (June 3, 2009) (SR–Phlx–2009–32).

[4] *See* Securities Exchange Act Release No. 60202 (June 30, 2009), 74 FR 32675 (''Notice'').

[5] A ''distributor receives a feed or data file of data directly from NASDAQ OMX PHLX or indirectly through another entity and then distributes it either internally or externally. All distributors will be required to execute a NASDAQ OMX PHLX distributor agreement.

[6] An Internal Distributor is an organization that subscribes to the Exchange for the use of TOPO, and is permitted by agreement with the Exchange to provide TOPO data to internal users (*i.e.,* users within their own organization). An External Distributor is an organization that subscribes to the Exchange for the use of TOPO, and is permitted by agreement with the Exchange to provide TOPO data to both internal users and to external users (*i.e.,* users outside of their own organization).

[7] In approving this proposed rule change, the Commission has considered the proposed rule's impact on efficiency, competition, and capital formation. *See* 15 U.S.C. 78c(f).

[8] 15 U.S.C. 78f(b)(4).

the Act,[9] which requires, among other things, that the rules of an exchange be designed to promote just and equitable principles of trade, to foster cooperation and coordination with persons engaged in regulating, clearing, settling, processing information with respect to, and facilitating transactions in securities, to remove impediments to and perfect the mechanism of a free and open market and a national market system, and, in general, to protect investors and the public interest; and not be designed to permit unfair discrimination between customers, issuers, brokers, or dealers. The Commission also finds that the proposed rule change is consistent with Section 6(b)(8) of the Act[10] in that it does not impose any burden on competition not necessary or appropriate in furtherance of the purposes of the Act.

The Commission has reviewed the proposal using the approach set forth in the approval order for SR–NYSEArca–2006–21 for non-core market data fees.[11] In the NYSE Arca Order, the Commission stated that ''when possible, reliance on competitive forces is the most appropriate and effective means to assess whether the terms for the distribution of non-core data are equitable, fair and reasonable, and not unreasonably discriminatory.''[12] It noted that the ''existence of significant competition provides a substantial basis for finding that the terms of an exchange's fee proposal are equitable, fair, reasonable, and not unreasonably or unfairly discriminatory.''[13] If an exchange ''was subject to significant competitive forces in setting the terms of a proposal,'' the Commission will approve a proposal unless it determines that ''there is a substantial countervailing basis to find that the terms nevertheless fail to meet an applicable requirement of the Exchange Act or the rules thereunder.''[14]

As noted in the NYSE Arca Order, the standards in Section 6 of the Act do not differentiate between types of data and therefore apply to exchange proposals to distribute both core data and non-core data.[15] All U.S. options exchanges are required pursuant to the Plan for Reporting of Consolidated Options Last Sale Reports and Quotation Information (''OPRA Plan'') to provide ''core data''—the best-priced quotations and comprehensive last sale reports—to OPRA, which data is then distributed to the public pursuant to the OPRA Plan.[16] In contrast, individual exchanges and other market participants distribute non-core data voluntarily.[17] The mandatory nature of the core data disclosure regime leaves little room for competitive forces to determine products and fees.[18] Non-core data products and their fees are, by contrast, much more sensitive to competitive forces. The Commission therefore is able to rely on competitive forces in its determination of whether an exchange's proposal to distribute non-core data meets the standards of Section 6.[19]

Because Phlx's instant proposal relates to the distribution of non-core data, the Commission will apply the market-based approach set forth in the NYSE Arca Order. Pursuant to this approach, the first step is to determine whether Phlx was subject to significant competitive forces in setting the terms of its non-core market data proposal, including the level of any fees. As in the NYSE Arca Order, in determining whether Phlx was subject to significant competitive forces in setting the terms of its proposal, the Commission has analyzed Phlx's compelling need to attract order flow from market participants, and the availability to market participants of alternatives to purchasing Phlx's non-core market data.

The Commission believes that the options industry currently is subject to significant competitive forces. It is generally accepted that the start of widespread multiple listing of options across exchanges in August 1999 greatly enhanced competition among the exchanges.[20] The launch of three options exchanges since that time, numerous market structure innovations, and the start of the options penny pilot[21] have all further intensified intermarket competition for order flow.[22]

Phlx currently competes with six options exchanges for order flow.[23] Attracting order flow is an essential part of Phlx's competitive success.[24] If Phlx cannot attract order flow to its market, it will not be able to execute transactions. If Phlx cannot execute transactions on its market, it will not generate transaction revenue. If Phlx cannot attract orders or execute transactions on its market, it will not have market data to distribute, for a fee or otherwise, and will not earn market data revenue and thus not be competitive with other exchanges that have this ability. In its filing, Phlx provided market share data for the seven options exchanges.[25]

These market share percentages strongly indicate that Phlx must compete vigorously for order flow to maintain its share of trading volume. This compelling need to attract order flow imposes significant pressure on Phlx to act reasonably in setting its fees for Phlx market data, particularly given that the market participants that will pay such fees often will be the same market participants from whom Phlx must attract order flow. These market participants include broker-dealers that control the handling of a large volume of customer and proprietary order flow. Given the portability of order flow from one exchange to another, any exchange that sought to charge unreasonably high data fees would risk alienating many of the same customers on whose orders it depends for competitive survival.[26]

Phlx currently trades options on seven proprietary index products that are not traded on any other exchange. Phlx represents that these seven options

[9] 15 U.S.C. 78f(b)(5).

[10] 15 U.S.C. 78f(b)(8).

[11] *See* Securities Exchange Act Release No. 59039 (December 2, 2008), 73 FR 74770 (December 9, 2008) (SR–NYSEArca–2006–21) (''NYSE Arca Order'').

[12] *Id.* at 74771.

[13] *Id.* at 74782.

[14] *Id.* at 74781.

[15] *Id.* at 74779.

[16] *See* OPRA Plan, Sections V(a)–(c).

[17] *See* NYSE Arca Order, *supra,* note 11, at 74779.

[18] *Id.*

[19] *Id.*

[20] *See* generally *Concept Release: Competitive Developments in the Options Markets,* Securities Exchange Act Release No. 49175 (February 3, 2004), 69 FR 6124 (February 9, 2004); *see also* Battalio, Robert, Hatch, Brian, and Jennings, Robert, *Toward a National Market System for U.S. Exchange-listed Equity Options,* The Journal of Finance 59 (933–961); De Fontnouvelle, Patrick, Fishe, Raymond P., and Harris, Jeffrey H., *The Behavior of Bid-Ask Spreads and Volume in Options Markets During the Competition for Listings in 1999,* The Journal of Finance 58 (2437–2463); and Mayhew, Stewart, *Competition, Market Structure, and Bid-Ask Spreads in Stock Option Markets,* The Journal of Finance 57 (931–958).

[21] *See, e.g.,* Securities Exchange Act Release Nos. 55162 (January 24, 2007), 72 FR 4738 (February 1, 2007) (SR–Amex–2006–106); 55073 (January 9, 2007), 72 FR 4741 (February 1, 2007) (SR–BSE–2006–48); 55154 (January 23, 2007), 72 FR 4743 (February 1, 2007) (SR–CBOE–2006–92); 55161 (January 24, 2007), 72 FR 4754 (February 1, 2007) (SR–Phlx–2006–62); 55156 (January 23, 2007), 72 FR 4759 (February 1, 2007) (SR–NYSEArca–2006–73); and 55153 (January 23, 2007), 72 FR 4553 (January 31, 2007) (SR–Phlx–2006–74).

[22] *See* Securities Exchange Act Release No. 59949 (May 20, 2009), 74 FR 25593 (May 28, 2009) (SR–ISE–2007–97) (order approving a proposed rule change by ISE to establish fees for a depth of market data product).

[23] In its filing, Phlx states that ''[a]s an illustration of the intensity of the competition for options order flow among the seven U.S. options exchanges, the ISE and * * * CBOE each enjoy close to thirty percent market share of volume, followed by Phlx at close to twenty percent market share, followed by four other exchanges with meaningful market share.'' *See* Notice, *supra,* note 4, at 32676.

[24] Phlx states in its filing that it ''has a compelling need to attract order flow from market participants * * * in order to maintain its share of trading volume.'' *See* Notice, *supra,* note 4, at 32676.

[25] *See* Notice, *supra,* note 4, at 32676.

[26] *Id.*

currently represent less than 0.04% of Phlx's total contract volume.[27] The Commission believes that, given the small percentage of Phlx's total contract volume represented by these seven products, the inclusion of data on these products in Phlx's TOPO product will not confer market power on Phlx to compel market participants to purchase the entire Phlx data feed. The Commission therefore believes that the inclusion of top-of-book data for these products in Phlx's TOPO product does not undermine the finding that Phlx was subject to significant competitive forces in setting the terms of its proposal.

In addition to the need to attract order flow, the availability of alternatives to TOPO product significantly affect the terms on which Phlx can distribute this market data.[28] In setting the fees for its TOPO product, Phlx must consider the extent to which market participants would choose one or more alternatives instead of purchasing its data.[29] The most basic source of information concerning the top-of-book generally available at an exchange is the complete record of an exchange's transactions that is provided in the core data feeds.[30] In this respect, the core data feeds that include an exchange's own transaction information are a significant alternative to the exchange's market data product.[31] Further, other options exchanges can produce their own top-of-book products, and thus are sources of potential competition for Phlx.[32]

The Commission believes that there are a number of alternative sources of information that impose significant competitive pressures on Phlx in setting the terms for distributing its TOPO product. The Commission believes that the availability of those alternatives, as well as Phlx's compelling need to attract order flow, imposed significant competitive pressure on Phlx to act equitably, fairly, and reasonably in setting the terms of its proposal.

Because Phlx was subject to significant competitive forces in setting the terms of the proposal, the Commission will approve the proposal in the absence of a substantial countervailing basis to find that the terms of the proposal fail to meet the applicable requirements of the Act or the rules thereunder. The Commission did not receive any comments on the proposal. Further, an analysis of the proposal does not provide such a basis. The Commission notes that the proposed fees for TOPO are lower for Internal Distributors than for External Distributors. Because Internal Distributors are by definition more limited in the scope of their distribution of TOPO data than External Distributors, it is reasonable to expect that Internal Distributors will provide TOPO data to a smaller number of internal subscribers.[33] The fees therefore do not unreasonably discriminate among types of subscribers, such as by favoring participants in the Phlx market or penalizing participants in other markets.

IV. Conclusion

It is therefore ordered, pursuant to Section 19(b)(2) of the Act, that the proposed rule change (SR–Phlx–2009–54), be and hereby is approved.

For the Commission, by the Division of Trading and Markets, pursuant to delegated authority.[34]

Florence E. Harmon,

Deputy Secretary.

[FR Doc. E9–19569 Filed 8–14–09; 8:45 am]

BILLING CODE 8010–01–P

[27] *Id.*

[28] *See* NYSE Arca Order, *supra* note 11, at 74784.

[29] *Id.* at 74783.

[30] *Id.*

[31] *Id.* Information on transactions executed on Phlx is available through OPRA.

[32] In its filing, Phlx states that "ISE and CBOE are potential competitors because each exchange enjoys greater market share and thus the ability to offer a top-of-book product that would compete favorably with TOPO." *See* Notice, *supra,* note 4, at 32677.

Phlx also notes that although the TOPO data feed is separate from the core data feed made available by OPRA, all of the information made available in TOPO is included in the core data feed. Phlx states that the OPRA data is widely distributed and relatively inexpensive, thus constraining Phlx's ability to price TOPO. *See* Notice, *supra,* note 4, at 32677.

[33] Conversely, External Distributors can reasonably be expected to distribute the TOPO data to a higher number of subscribers because they do not have the same limitation. Accordingly, the Exchange will charge a higher fee to External Distributors than to Internal Distributors. *See id.*

[34] 17 CFR 200.30–3(a)(12).

[1] 15 U.S.C. 78s(b)(1).

[2] 17 CFR 240.19b–4.

SECURITIES AND EXCHANGE COMMISSION

[Release No. 34–60460; File No. SR–NYSEArca–2009–55]

Self-Regulatory Organizations; NYSE Arca, Inc.; Order Granting Approval of a Proposed Rule Change To List and Trade Shares of the Dent Tactical ETF

August 7, 2009.

On June 18, 2009, NYSE Arca, Inc. ("NYSE Arca" or "Exchange"), through its wholly owned subsidiary, NYSE Arca Equities, Inc. ("NYSE Arca Equities"), filed with the Securities and Exchange Commission ("Commission"), pursuant to Section 19(b)(1) of the Securities Exchange Act of 1934 ("Act")[1] and Rule 19b–4 thereunder,[2] a proposed rule change to list and trade shares ("Shares") of the Dent Tactical ETF ("Fund") under NYSE Arca Equities Rule 8.600. The proposed rule change was published in the **Federal Register** on July 8, 2009.[3] The Commission received no comments on the proposal. This order grants approval of the proposed rule change.

I. Description of the Proposal

The Exchange proposes to list and trade the Shares of the Fund under NYSE Arca Equities Rule 8.600, which governs the listing of Managed Fund Shares.[4] The Shares will be offered by AdvisorShares Trust ("Trust"), a statutory trust organized under the laws of the State of Delaware and registered with the Commission as an open-end management investment company.[5] The investment advisor to the Fund is AdvisorShares Investments, LLC ("Advisor"), and the day-to-day portfolio management of the Fund is provided by the sub-advisor to the Fund, HS Dent Investment Management, LLC ("Sub-Advisor").[6] The Exchange represents that the Shares will conform to the initial and continued listing criteria under NYSE Arca Equities Rule 8.600 and that the Fund will be in compliance with Rule 10A–3 under the Act,[7] as provided by NYSE Arca Equities Rule 5.3.

The Fund is a "fund of funds," which means that the Fund seeks to invest primarily in other exchange-traded funds that are registered under the 1940 Act and certain other exchange-traded products that are not registered as investment companies under the 1940 Act (collectively, "Underlying ETPs").[8] The Fund seeks to achieve its investment objective of long-term growth of capital by identifying, through

[3] *See* Securities Exchange Act Release No. 60195 (June 30, 2009), 74 FR 32678 ("Notice").

[4] *See* NYSE Arca Equities Rule 8.600.

[5] The Trust is registered under the Investment Company Act of 1940 ("1940 Act"). On June 9, 2009, the Trust filed with the Commission a registration statement on Form N–1A (File Nos. 333–157876 and 811–22110) ("Registration Statement").

[6] The Exchange represents that neither the Advisor nor the Sub-Advisor is affiliated with a broker-dealer. *See* Commentary .07 to NYSE Arca Equities Rule 8.600.

[7] 17 CFR 240.10A–3.

[8] Underlying ETPs include Investment Company Units (NYSE Arca Equities Rule 5.2(j)(3)); Index-Linked Securities (NYSE Arca Equities Rule 5.2(j)(6)); Portfolio Depositary Receipts (NYSE Arca Equities Rule 8.100); Trust Issued Receipts (NYSE Arca Equities Rule 8.200); Commodity-Based Trust Shares (NYSE Arca Equities Rule 8.201); Currency Trust Shares (NYSE Arca Equities Rule 8.202); Commodity Index Trust Shares (NYSE Arca Equities Rule 8.203); Trust Units (NYSE Arca Equities Rule 8.500); and Managed Fund Shares (NYSE Arca Equities Rule 8.600).

proprietary economic and demographic analysis, the overall trend of the U.S. and global economies, and then implementing investment strategies in asset classes that the Sub-Advisor believes will benefit from these trends. The Sub-Advisor will follow its model to determine how offensive or defensive the Fund portfolio will be, and then will select the securities to buy or sell. Except for Underlying ETPs that may hold non-U.S. issues, the Fund will not otherwise invest in non-U.S. issues.

Additional information regarding the Fund, the Shares, the Fund's investment objective, strategies, methodology, and restrictions, the investment Advisor and Sub-Advisor, risks, fees and expenses, creations and redemptions of Shares, availability of information, trading rules and halts, and surveillance procedures, among other things, can be found in the Registration Statement and in the Notice, as applicable.

II. Discussion and Commission's Findings

The Commission has carefully reviewed the proposed rule change and finds that it is consistent with the requirements of Section 6 of the Act [9] and the rules and regulations thereunder applicable to a national securities exchange.[10] In particular, the Commission finds that the proposal is consistent with Section 6(b)(5) of the Act,[11] which requires, among other things, that the Exchange's rules be designed to promote just and equitable principles of trade, to remove impediments to and perfect the mechanism of a free and open market and a national market system, and, in general, to protect investors and the public interest.

The Commission finds that the proposal to list and trade the Shares on the Exchange is consistent with Section 11A(a)(1)(C)(iii) of the Act, which sets forth Congress' finding that it is in the public interest and appropriate for the protection of investors and the maintenance of fair and orderly markets to assure the availability to brokers, dealers and investors of information with respect to quotations for and transactions in securities. Quotation and last-sale information for the Shares will be available via the Consolidated Tape Association (''CTA'') high-speed line, and the Exchange will disseminate the Portfolio Indicative Value (''PIV'') at least every 15 seconds during the Core Trading Session through the facilities of the CTA. In addition, the Fund will make available on its Web site on each business day before commencement of the Core Trading Session the Disclosed Portfolio that will form the basis for the Fund's calculation of the net asset value (''NAV'').[12] A basket composition file, which includes the security names and share quantities required to be delivered in exchange for Fund shares, together with estimates and actual cash components, will be publicly disseminated daily prior to the opening of the New York Stock Exchange via the National Securities Clearing Corporation. The Fund's Web site will also include additional quantitative information updated on a daily basis relating to trading volume, prices, and NAV. Information regarding the market price and volume of the Shares will be continually available on a real-time basis throughout the day via electronic services, and the previous day's closing price and trading volume information for the Shares will be published daily in the financial sections of newspapers.

The Commission further believes that the proposal to list and trade the Shares is reasonably designed to promote fair disclosure of information that may be necessary to price the Shares appropriately and to prevent trading when a reasonable degree of transparency cannot be assured. The Commission notes that the Advisor and Sub-Advisor to the Fund are not affiliated with a broker-dealer.[13] The Commission also notes that the Exchange will obtain a representation from the Fund that the NAV per Share will be calculated daily and that the NAV and the Disclosed Portfolio will be made available to all market participants at the same time.[14] Additionally, if it becomes aware that the NAV or the Disclosed Portfolio is not disseminated to all market participants at the same time, the Exchange will halt trading in the Shares until such information is available to all market participants. Further, if the PIV is not being disseminated as required, the Exchange may halt trading during the day in which the interruption occurs; if the interruption persists past the day in which it occurred, the Exchange will halt trading no later than the beginning of the trading day following the interruption.[15] Finally, the Commission notes that the Reporting Authority that provides the Disclosed Portfolio must implement and maintain, or be subject to, procedures designed to prevent the use and dissemination of material non-public information regarding the actual components of the portfolio.[16]

The Exchange has represented that the Shares are equity securities subject to the Exchange's rules governing the trading of equity securities. In support of this proposal, the Exchange has made representations, including:

(1) The Shares will conform to the initial and continued listing criteria under NYSE Arca Equities Rule 8.600.

(2) The Exchange's surveillance procedures are adequate to properly monitor Exchange trading of the Shares in all trading sessions and to deter and detect violations of Exchange rules and applicable federal securities laws.

(3) Prior to the commencement of trading, the Exchange will inform its ETP Holders in an Information Bulletin of the special characteristics and risks associated with trading the Shares. Specifically, the Information Bulletin will discuss the following: (a) The procedures for purchases and redemptions of Shares and that Shares are not individually redeemable; (b) NYSE Arca Equities Rule 9.2(a), which imposes a duty of due diligence on its ETP Holders to learn the essential facts relating to every customer prior to trading the Shares; (c) the risks involved in trading the Shares during the Opening and Late Trading Sessions when an updated PIV will not be calculated or publicly disseminated; (d) how information regarding the PIV is disseminated; (e) the requirement that

[9] 15 U.S.C. 78f.

[10] In approving this proposed rule change the Commission has considered the proposed rule's impact on efficiency, competition, and capital formation. *See* 15 U.S.C. 78c(f).

[11] 17 U.S.C. 78f(b)(5).

[12] The Advisor will disclose for each portfolio security or other financial instrument of the Fund the following information: Ticker symbol (if applicable), name of security or financial instrument, number of shares or dollar value of financial instruments held in the portfolio, and percentage weighting of the security or financial instrument in the portfolio. The NAV of the Fund will normally be determined as of the close of the regular trading session on the New York Stock Exchange (ordinarily 4 p.m. Eastern Time) on each business day.

[13] *See* Commentary .07 to NYSE Arca Equities Rule 8.600. The Commission notes that any additional sub-advisers to the Fund that are affiliated with a broker-dealer will be required to implement a fire-wall with respect to such broker-dealer regarding access to information concerning the composition of the portfolio. Commentary .07 to NYSE Arca Equities Rule 8.600 also requires that any personnel who make decisions on the Fund's portfolio composition must be subject to procedures designed to prevent the use and dissemination of material non-public information regarding the portfolio.

[14] *See* NYSE Arca Equities Rule 8.600(d)(1)(B).

[15] *See* NYSE Arca Equities Rule 8.600(d)(2)(D). Trading in the Shares may also be halted because of market conditions or for reasons that, in the view of the Exchange, make trading in the Shares inadvisable. These may include: (1) The extent to which trading is not occurring in the securities comprising the Disclosed Portfolio and/or the financial instruments of the Fund; or (2) whether other unusual conditions or circumstances detrimental to the maintenance of a fair and orderly market are present.

[16] *See* NYSE Arca Equities Rule 8.600(d)(2)(B)(ii).

ETP Holders deliver a prospectus to investors purchasing newly issued Shares prior to or concurrently with the confirmation of a transaction; and (f) trading information.

(4) The Fund will be in compliance with Rule 10A–3 under the Act.[17]

(5) Except for Underlying ETPs that may hold non-U.S. issues, the Fund will not otherwise invest in non-U.S. issues.

This approval order is based on the Exchange's representations.

For the foregoing reasons, the Commission finds that the proposed rule change is consistent with Section 6(b)(5) of the Act [18] and the rules and regulations thereunder applicable to a national securities exchange.

III. Conclusion

It is therefore ordered, pursuant to Section 19(b)(2) of the Act,[19] that the proposed rule change (SR–NYSEArca–2009–55) be, and it hereby is, approved.

For the Commission, by the Division of Trading and Markets, pursuant to delegated authority.[20]

Florence E. Harmon,

Deputy Secretary.

[FR Doc. E9–19570 Filed 8–14–09; 8:45 am]

BILLING CODE 8010–01–P

SECURITIES AND EXCHANGE COMMISSION

[Release No. 34–60462; File No. SR–FINRA–2009–050]

Self-Regulatory Organizations; Financial Industry Regulatory Authority, Inc.; Notice of Filing of Proposed Rule Change Relating to FINRA Rule 8312 (FINRA BrokerCheck Disclosure)

August 7, 2009.

Pursuant to Section 19(b)(1) of the Securities Exchange Act of 1934 (''Act'') [1] and Rule 19b–4 thereunder,[2] notice is hereby given that on July 24, 2009, Financial Industry Regulatory Authority, Inc. (''FINRA'') filed with the Securities and Exchange Commission (''SEC'' or ''Commission'') the proposed rule change as described in Items I, II, and III below, which Items have been prepared by FINRA. The Commission is publishing this notice to solicit comments on the proposed rule change from interested persons.

I. Self-Regulatory Organization's Statement of the Terms of Substance of the Proposed Rule Change

FINRA is proposing to amend FINRA Rule 8312 (FINRA BrokerCheck Disclosure) to retain and make publicly available in BrokerCheck certain information about former associated persons of a member who were the subject of a final regulatory action as defined in Form U4 that has been reported to the Central Registration Depository (''CRD®'' or ''CRD System'') via a uniform registration form.[3]

The text of the proposed rule change is available on FINRA's Web site at *http://www.finra.org,* at the principal office of FINRA and at the Commission's Public Reference Room.

II. Self-Regulatory Organization's Statement of the Purpose of, and Statutory Basis for, the Proposed Rule Change

In its filing with the Commission, FINRA included statements concerning the purpose of and basis for the proposed rule change and discussed any comments it received on the proposed rule change. The text of these statements may be examined at the places specified in Item IV below. FINRA has prepared summaries, set forth in sections A, B, and C below, of the most significant aspects of such statements.

A. Self-Regulatory Organization's Statement of the Purpose of, and Statutory Basis for, the Proposed Rule Change

1. Purpose

FINRA Rule 8312 governs the information FINRA releases to the public via BrokerCheck. FINRA established BrokerCheck (then known as the Public Disclosure Program) in 1988 to provide the public with information on the professional background, business practices, and conduct of FINRA members and their associated persons. Via BrokerCheck, FINRA releases to the public certain information reported on uniform registration forms to the CRD System. The primary purpose of BrokerCheck is to help investors make informed choices about the individuals and firms with which they may wish to do business.

Currently, as described in FINRA Rule 8312, BrokerCheck provides information regarding current and former members, as well as current associated persons and persons who were associated with a member within the preceding two years. The proposed rule change would expand BrokerCheck with respect to former associated persons to provide public access to certain information about such persons, regardless of when they were associated with a member, if they were the subject of any final regulatory action as defined in Form U4 that has been reported to CRD via a uniform registration form.[4] For purposes of the proposed rule change, a final regulatory action as defined in Form U4 may include any final action, including any action that is on appeal, by the SEC, Commodity Futures Trading Commission, a federal banking agency, the National Credit Union Administration, another federal regulatory agency, a state regulatory agency, a foreign financial regulatory authority, or a self-regulatory organization (as those terms are used in Form U4).[5] To illustrate, actions that are delineated in current Form U4 Questions 14C, 14D, or 14E would be considered ''final regulatory actions.'' Similarly, actions that are detailed in current Form U5 Question 7D, and have a status of ''final'' or ''on appeal,'' would be considered ''final regulatory actions'' as such actions are also addressed in Form U4.[6]

The proposed rule change would allow the public access to information about formerly registered persons who, although no longer in the securities industry in a registered capacity, may work in other investment-related industries or attain other positions of trust and about whom investors may wish to learn relevant disciplinary information. Specifically, FINRA would disclose through BrokerCheck

---

[17] *See supra* note 7.

[18] 15 U.S.C. 78f(b)(5).

[19] 15 U.S.C. 78s(b)(2).

[20] 17 CFR 200.30–3(a)(12).

[1] 15 U.S.C. 78s(b)(1).

[2] 17 CFR 240.19b–4.

[3] The uniform registration forms are Form BD (Uniform Application for Broker-Dealer Registration), Form BDW (Uniform Request for Broker-Dealer Withdrawal), Form U4 (Uniform Application for Securities Industry Registration or Transfer), Form U5 (Uniform Termination Notice for Securities Industry Registration), and Form U6 (Uniform Disciplinary Action Reporting Form).

[4] Because the information disclosed through BrokerCheck is derived from the CRD System, BrokerCheck will only disclose information regarding regulatory actions that have been reported to CRD via a uniform registration form.

[5] A final regulatory action would not include any action limited to the revocation or suspension of an individual's authorization to act as an attorney, accountant or federal contractor (current Form U4 Question 14F).

[6] FINRA staff also will review responses to all Regulatory Action Disclosure questions and Disclosure Review Pages on the Forms U4 and U5 (including the predecessor questions in this area), as well as information filed on Form U6 to determine whether a former associated person is subject to a final regulatory action and should therefore be included in BrokerCheck pursuant to the proposed rule change. Under the proposed rule change, FINRA may disclose a final action that is reported by a regulator on a Form U6 even if that action has not been reported by an individual on a Form U4 because, for example, the individual was not registered at the time the final regulatory action was reported.

information concerning any final regulatory action(s), as well as certain administrative information (*e.g.,* employment and registration history) and information as to qualification examinations, if available, regarding these formerly registered individuals. FINRA also would provide the most recently submitted comment, if any, provided by the subject person, presuming the comment is in the form and in accordance with the procedures established by FINRA and relates to the information provided through BrokerCheck. The proposed rule change would not expand access to other information that may be part of the CRD System regarding the former registered person, such as customer complaints, bankruptcies, liens, criminal events or arbitration claims.

FINRA notes that the amount and format of information made available for this expanded category of individuals will depend in part on when such individuals left the securities industry, and whether their CRD data is available in Web-based format. Since FINRA launched its Web-based CRD system (''Web CRD'') in 1999, it has used the information in the Web CRD database to generate BrokerCheck reports. The Web CRD database contains information regarding all persons that have been registered with FINRA since the implementation of the Legacy CRD system in 1981. The majority of those records contain administrative and disclosure information and are in the Web CRD format. However, two conditions apply to a small percentage of individuals who were no longer registered at the time Web CRD was established in 1999. First, not all of these individuals' records are available in the Web CRD format; instead, their records exist in the Legacy CRD format.[7] Second, for a very small percentage of individuals, certain administrative information is unavailable in either the Web or Legacy CRD format.[8]

Consequently, FINRA expects that, for the large majority of the individuals who will be subject to BrokerCheck as a result of the proposed expansion, all of the information proposed to be disclosed (*i.e.,* information regarding final regulatory actions, employment and registration history, qualification examinations, and most recent comment) will be made available to the public. FINRA recognizes, however, that for a limited number of individuals whose registration with FINRA ceased prior to 1999, not all of the administrative data and qualification information will be available. In such situations, only the individual's name, information about any final regulatory actions, and the most recent comment, if any, will be disclosed through BrokerCheck.

With respect to individuals whose records exist in the Legacy CRD format, FINRA staff will manually prepare the BrokerCheck report (upon request), convert the report to an electronic format, and make the report available through BrokerCheck to a requester. FINRA staff will endeavor to respond promptly to requests for information regarding these persons. This protocol also will allow FINRA staff to review the information to determine if the content is in the form and in accordance with the procedures established by FINRA prior to making the information available through BrokerCheck.[9] Upon identifying or being made aware of the inclusion in a BrokerCheck report of potentially inappropriate information, including customer names, confidential account information or possibly offensive or potentially defamatory language, FINRA will continue to employ a balancing test to weigh the value of the language in controversy for regulatory and investor protection purposes against the objector's asserted privacy rights and/or potential defamation claims. Based on this balancing, FINRA could determine to redact the controversial language from BrokerCheck reports on a case-by-case basis.[10]

FINRA believes this measured expansion of BrokerCheck strikes a balance between, on the one hand, investor protection interests, and on the other hand, personal privacy and fairness to former registered persons. In this regard, FINRA notes that much of the information that would be subject to release pursuant to the proposed rule change (*i.e.,* information concerning certain final regulatory actions) may be available through other public sources. For example, FINRA provides information about its disciplinary actions involving current and formerly registered persons on its Web site; information about other actions that would be considered final regulatory actions may be available through other public sources, such as online search engines, regulators' Web sites, and fee-based services such as *Lexis* or *Westlaw.* Further, final regulatory actions are subject to procedures that allow an opportunity for the subject person to present arguments to a fact-finder about the allegations prior to the final disposition of the matter. In addition, final regulatory actions may be relevant or material to investors wishing to find out disciplinary information about a formerly registered person. As a result, providing this information through BrokerCheck would provide the public with a useful method to discover information about former registered persons without undue burden on formerly registered persons. As mentioned above, the former registered person has the opportunity to submit a comment for publication in BrokerCheck in response to information provided through BrokerCheck, provided the comment is in the form and in accordance with the procedures established by FINRA and relates to the information provided through BrokerCheck.

In further recognition of FINRA's attempt to strike a balance between personal privacy and investor protection concerns, as noted above, FINRA is not proposing to expand access to other information that may be part of the CRD System regarding former registered persons who have not been registered with a member for more than two years, such as bankruptcies, liens, criminal events or arbitration claims. In that regard, FINRA believes that these other categories of information are more relevant to an investor or potential customer when the individual is registered or was recently registered (*i.e.,* within two years). FINRA also notes that, unlike final regulatory actions, arbitration claims may not be subject to procedures that allow an opportunity for the subject person to present arguments to a fact-finder about the allegations prior to final disposition (including, *e.g.,* arbitration claims filed at or near the time the subject person left the industry). Further, a firm may

[7] For prudential reasons, FINRA did not convert into the Web CRD format the data for all individuals whose FINRA registrations were terminated prior to November 1996 (''Legacy CRD individuals''); instead, these records were moved to Web CRD in their Legacy CRD data format. As a result of the different data formats, and certain technical and operational challenges associated with providing information on eligible Legacy CRD individuals, FINRA expects to implement the expanded program in two phases. Eligible individuals whose records are in the Web CRD format will be available in the first phase; eligible individuals whose records are in the Legacy format will be available in the second phase.

[8] During the existence of the Legacy CRD system, FINRA removed from the system administrative data for individuals who had ceased being registered for a period of time to free up storage space on the system. As a result, this data was not moved to Web CRD (in either Legacy or Web CRD format) and is not available for display in BrokerCheck.

[9] *See, e.g.,* Securities Exchange Act Release No. 42402 (February 7, 2000), 65 FR 7582 (February 15, 2000) (Order Approving SR–NASD–99–45).

[10] *See, e.g.,* Securities Exchange Act Release No. 42402 (February 7, 2000), 65 FR 7582 (February 15, 2000) (Order Approving SR–NASD–99–45).

choose to settle an arbitration claim (*e.g.,* for business reasons) notwithstanding the desire of a subject person to contest the claim. In addition, both criminal charges and convictions that are reported subsequently may have a different disposition, which may significantly change the meaning of the matter as originally reported (for example, such charges or convictions may be dismissed or expunged). Finally, FINRA does not view reportable financial matters (*e.g.,* bankruptcies and liens) as having the same degree of materiality as final regulatory actions such that they should continue to be disclosed on a permanent basis.

FINRA will announce the effective date of the proposed rule change in a *Regulatory Notice* to be published no later than 60 days following Commission approval.

2. Statutory Basis

FINRA believes that the proposed rule change is consistent with the provisions of Section 15A(b)(6) of the Act,[11] which requires, among other things, that FINRA rules must be designed to prevent fraudulent and manipulative acts and practices, to promote just and equitable principles of trade, and, in general, to protect investors and the public interest. The proposed rule change, among other things, would enhance investor protection by providing access through the BrokerCheck program to certain information about former associated persons of a member who were the subject of a final regulatory action as defined in Form U4 that has been reported to CRD on a uniform registration form.

B. Self-Regulatory Organization's Statement on Burden on Competition

FINRA does not believe that the proposed rule change will result in any burden on competition that is not necessary or appropriate in furtherance of the purposes of the Act.

C. Self-Regulatory Organization's Statement on Comments on the Proposed Rule Change Received From Members, Participants, or Others

Written comments were neither solicited nor received.

III. Date of Effectiveness of the Proposed Rule Change and Timing for Commission Action

Within 35 days of the date of publication of this notice in the **Federal Register** or within such longer period (i) as the Commission may designate up to 90 days of such date if it finds such longer period to be appropriate and publishes its reasons for so finding or (ii) as to which the self-regulatory organization consents, the Commission will:

(A) By order approve such proposed rule change, or

(B) institute proceedings to determine whether the proposed rule change should be disapproved.

IV. Solicitation of Comments

Interested persons are invited to submit written data, views and arguments concerning the foregoing, including whether the proposed rule change is consistent with the Act. Comments may be submitted by any of the following methods:

Electronic Comments

- Use the Commission's Internet comment form (*http://www.sec.gov/rules/sro.shtml*); or
- Send an e-mail to *rule-comments@sec.gov.* Please include File Number SR–FINRA–2009–050 on the subject line.

Paper Comments

- Send paper comments in triplicate to Elizabeth M. Murphy, Secretary, Securities and Exchange Commission, 100 F Street, NE., Washington, DC 20549–1090.

All submissions should refer to File Number SR–FINRA–2009–050. This file number should be included on the subject line if e-mail is used. To help the Commission process and review your comments more efficiently, please use only one method. The Commission will post all comments on the Commission's Internet Web site (*http://www.sec.gov/rules/sro.shtml*). Copies of the submission, all subsequent amendments, all written statements with respect to the proposed rule change that are filed with the Commission, and all written communications relating to the proposed rule change between the Commission and any person, other than those that may be withheld from the public in accordance with the provisions of 5 U.S.C. 552, will be available for inspection and copying in the Commission's Public Reference Room, 100 F Street, NE., Washington, DC 20549, on official business days between the hours of 10 a.m. and 3 p.m. Copies of such filing also will be available for inspection and copying at the principal office of FINRA. All comments received will be posted without change; the Commission does not edit personal identifying information from submissions. You should submit only information that you wish to make available publicly. All submissions should refer to File Number SR–FINRA–2009–050 and should be submitted on or before September 8, 2009.

For the Commission, by the Division of Trading and Markets, pursuant to delegated authority.[12]

Florence E. Harmon,

Deputy Secretary.

[FR Doc. E9–19571 Filed 8–14–09; 8:45 am]

BILLING CODE 8010–01–P

[11] 15 U.S.C. 78*o*–3(b)(6).

[12] 17 CFR 200.30–3(a)(12).

SECURITIES AND EXCHANGE COMMISSION

[Release No. 34–60461; File No. SR–Phlx-2009–66]

Self-Regulatory Organizations; NASDAQ OMX PHLX, Inc.; Notice of Filing and Immediate Effectiveness of Proposed Rule Change Relating to Fee Waivers

August 7, 2009.

Pursuant to Section 19(b)(1)[1] of the Securities Exchange Act of 1934 (the ''Act'')[2] and Rule 19b-4 thereunder,[3] notice is hereby given that, on July 31, 2009, NASDAQ OMX PHLX, Inc. (''Phlx'' or the ''Exchange'') filed with the Securities and Exchange Commission (the ''Commission'') the proposed rule change as described in Items I, II, and III below, which Items have been prepared by the self-regulatory organization. The Commission is publishing this notice to solicit comments on the proposed rule change from interested persons.

I. Self-Regulatory Organization's Statement of the Terms of Substance of the Proposed Rule Change

The Exchange proposes to amend the NASDAQ OMX PHLX Fee Schedule to adopt, on a pilot basis, a waiver of the Phlx XL II Options Routing Pass-Through Fees for customer orders that are routed by the Exchange's enhanced electronic trading platform for options, Phlx XL II to away markets for execution.

The proposed fee waiver pilot would apply to transactions settling on or after July 1, 2009, and extend through December 31, 2009.

The text of the proposed rule change is available on the Exchange's Web site at *http://nasdaqomxphlx.cchwallstreet.com/NASDAQOMXPHLX/Filings/,* at the

[1] 15 U.S.C.78s(b)(1).

[2] 15 U.S.C. 78a.

[3] 17 CFR 240.19b–4.

principal office of the Exchange, and at the Commission's Public Reference Room.

II. Self-Regulatory Organization's Statement of the Purpose of, and Statutory Basis for, the Proposed Rule Change

In its filing with the Commission, the Exchange included statements concerning the purpose of and basis for the proposed rule change and discussed any comments it received on the proposed rule change. The text of these statements may be examined at the places specified in Item IV below. The Exchange has prepared summaries, set forth in sections A, B, and C below, of the most significant aspects of such statements.

A. Self-Regulatory Organization's Statement of the Purpose of, and Statutory Basis for, the Proposed Rule Change

1. Purpose

The purpose of the proposed rule change is to amend the NASDAQ OMX PHLX Fee Schedule to adopt, on a pilot basis, a waiver of the Phlx XL II Options Routing Pass-Through Fee (the ''fee'').[4] The Exchange recently adopted the fee for executions of options orders entered into the Phlx XL II system that are routed to away markets.[5] The Exchange now proposes to waive the fee entirely for Phlx members and member organizations using the Phlx XL II system for routing standardized equity and index options to away markets for execution. The pilot would apply to transactions settling on or after July 1, 2009, and extend through December 31, 2009.

In the filing that adopted the fee, the Exchange stated its belief that these routing fees are inherently competitive, fair and reasonable, and non-discriminatory in that they replicate the fees assessed by away markets executing orders routed from the Phlx XL II system. As with all fees, the Exchange may adjust these routing fees in response to competitive conditions by filing a new proposed rule change. This proposal represents such a response.

Competitive Conditions

The routing fee applies today when the Phlx XL II system receives an order and there is a better bid or offer on an away market that the system can access for the execution of such order. The order is routed via Nasdaq Options Services LLC (''NOS''), a member of the Exchange, as the Exchange's exclusive order router. The sole use of NOS by the Phlx XL II system is to route orders in options listed and open for trading on the Phlx XL II system to destination markets. A particular destination market would charge NOS their applicable transaction fees, which are then passed through to Phlx, and ultimately to the initiating member. Similarly, clearing fees charged to NOS by the Options Clearing Corporation (''OCC'') are passed through in this manner.

The Exchange is aware of at least one competing U.S options exchange that does not pass through away market transaction and routing fees to the originating member. The Exchange believes that, absent a waiver of its current fee, it could lose valuable option order flow, due to the fact that a competing exchange currently does not charge such a fee.

The competition among the seven U.S options exchanges to attract order flow from market participants is fierce. In order to maintain its share of trading volume, the Exchange must be competitive in setting its fees for all services provided, including routing of options to better-priced away markets. In fact, the market participants that will pay routing pass-through fees often will be the same market participants from whom the Exchange must attract order flow. These market participants include broker-dealers that control the handling of a large volume of customer order flow. Given the portability of order flow from one exchange to another, an exchange that would charge routing fees, while at least one other competing market does not, would risk alienating many of the same market participants on whose orders it depends for competitive survival.

The Exchange believes therefore that the proposed waiver of the fee is competitive, fair and reasonable, and non-discriminatory in that such waiver replicates the practice of at least one competing options exchange respecting routing pass-through fees.

Applicability of Fee Waiver

The proposal would apply on a pilot basis for transactions settling on or after July 1, 2009, and extending through December 31, 2009, at which time the pilot would expire. The purpose of the pilot is to give the Exchange the opportunity to review and analyze its competitive position and market share to determine the effectiveness of the fee waiver.

The proposed waiver would apply to transactions that have taken place during the month of July, 2009. As of the filing of this proposal, the Exchange's billing cycle for July, 2009 is not complete, and pass-through routing fees that would ordinarily be charged may still be waived before the July billing cycle expires. Therefore, the exchange believes that it is fair, reasonable and non-discriminatory to apply the fee waiver to transactions settling on or after July 1, 2009, and extending through the proposed December 31, 2009 pilot expiration.

Members will be notified of the fee waiver by way of an Options Trader Alert (''OTA'') posted on the Exchange's Web site.

2. Statutory Basis

The Exchange believes that its proposal to amend its schedule of fees is consistent with Section 6(b) of the Act[6] in general, and furthers the objectives of Section 6(b)(4) of the Act[7] in particular, in that it is an equitable allocation of reasonable fees and other charges among Exchange members. The Phlx is one of seven options markets in the national market system for standardized options. Joining Phlx and electing to trade options is entirely voluntary. Under these circumstances, Phlx's fees must be competitive and low in order for Phlx to attract order flow, execute orders, and grow as a market. At least one competing market does not charge these fees and it is reasonable for Phlx to waive its pass-through routing fees as described above. As such, Phlx believes that its fees are fair and reasonable and consistent with the Act.

B. Self-Regulatory Organization's Statement on Burden on Competition

The Exchange does not believe that the proposed rule change will impose any burden on competition not necessary or appropriate in furtherance of the purposes of the Act.

C. Self-Regulatory Organization's Statement on Comments on the Proposed Rule Change Received From Members, Participants, or Others

No written comments were solicited or received.

III. Date of Effectiveness of the Proposed Rule Change and Timing for Commission Action

The foregoing rule change has become effective pursuant to Section 19(b)(3)(A)(ii) of the Act[8] and paragraph

[4] *See* e-mail from Richard S. Rudolph, Assistant General Counsel, NASDAQ OMX, to Christopher Chow, Special Counsel, Commission, dated August 5, 2009.

[5] *See* Securities Exchange Act Release No. 60103 (June 11, 2009), 74 FR 29252 (June 19, 2009) (SR–Phlx 2009–47).

[6] 15 U.S.C. 78f(b).

[7] 15 U.S.C. 78f(b)(4).

[8] 15 U.S.C. 78s(b)(3)(A)(ii).

(f)(2) of Rule 19b–4 [9] thereunder. At any time within 60 days of the filing of the proposed rule change, the Commission may summarily abrogate such rule change if it appears to the Commission that such action is necessary or appropriate in the public interest, for the protection of investors, or otherwise in furtherance of the purposes of the Act.

IV. Solicitation of Comments

Interested persons are invited to submit written data, views, and arguments concerning the foregoing, including whether the proposed rule change is consistent with the Act. Comments may be submitted by any of the following methods:

Electronic Comments

- Use the Commission's Internet comment form (*http://www.sec.gov/rules/sro.shtml);* or
- Send an e-mail to *rule-comments@sec.gov.* Please include File Number SR–Phlx-2009–66 on the subject line.

Paper Comments

- Send paper comments in triplicate to Elizabeth M. Murphy, Secretary, Commission, 100 F Street, NE., Washington, DC 20549–1090.

All submissions should refer to File Number SR–Phlx-2009–66. This file number should be included on the subject line if e-mail is used. To help the Commission process and review your comments more efficiently, please use only one method. The Commission will post all comments on the Commission's Internet Web site (*http://www.sec.gov/rules/sro.shtml).* Copies of the submission, all subsequent amendments, all written statements with respect to the proposed rule change that are filed with the Commission, and all written communications relating to the proposed rule change between the Commission and any person, other than those that may be withheld from the public in accordance with the provisions of 5 U.S.C. 552, will be available for inspection and copying in the Commission's Public Reference Room on official business days between the hours of 10 a.m. and 3 p.m. Copies of such filing also will be available for inspection and copying at the principal office of the Exchange. All comments received will be posted without change; the Commission does not edit personal identifying information from submissions. You should submit only information that you wish to make available publicly. All submissions should refer to File Number SR–Phlx–2009–66 and should be submitted on or before September 8, 2009.

For the Commission, by the Division of Trading and Markets, pursuant to delegated authority.[10]

Florence E. Harmon,

Deputy Secretary.

[FR Doc. E9–19572 Filed 8–14–09; 8:45 am]

BILLING CODE 8010–01–P

[9] 17 CFR 240.19b–4(f)(2).

[10] 17 CFR 200.30–3(a)(12).

SECURITIES AND EXCHANGE COMMISSION

[Release No. 34–60468; File No. SR–NYSEArca–2009–52]

Self-Regulatory Organizations; NYSE Arca, Inc.; Order Approving Proposed Rule Change To Amend the Schedule of Fees and Charges for Exchange Services

August 10, 2009.

I. Introduction

On June 10, 2009, NYSE Arca, Inc. (''NYSE Arca'' or ''Exchange'') through its wholly-owned subsidiary, NYSE Arca Equities, Inc. (''NYSE Arca Equities''), filed with the Securities and Exchange Commission (''Commission''), pursuant to Section 19(b)(1) of the Securities Exchange Act of 1934 (''Act'') [1] and Rule 19b–4 thereunder,[2] a proposed rule change amending its Schedule of Fees and Charges for Exchange Services (''Fee Schedule'') to revise the Listing Fees applicable to Derivative Securities Products. The proposed rule change was published in the **Federal Register** on July 7, 2009.[3] The Commission received no comments on the proposal. This order approves the proposed rule change.

II. Description of the Proposal

The Exchange proposes amending its Fee Schedule to revise the Listing Fees applicable to Derivative Securities Products listed under NYSE Arca Rules 5.2(j)(3) (Investment Company Units), 8.100 (Portfolio Depository Receipts), 8.200 (Trust Issued Receipts), 8.201 (Commodity-Based Trust Shares), 8.202 (Currency Trust Shares), 8.203 (Commodity Index Trust Shares), 8.204 (Commodity Futures Trust Shares), 8.300 (Partnership Units), 8.500 (Trust Units), and 8.600 (Managed Fund Shares) on NYSE Arca, LLC, the equities facility of NYSE Arca Equities. Specifically, the Exchange proposes to add a new provision to the Fee Schedule which states that in the case where a sponsor, managing owner, general partner or equivalent (collectively, the ''Sponsor'') is listing a new Derivative Securities Product on the Exchange for the first time, the Sponsor will be charged a one time consultation fee in the amount of $20,000.

The proposed consulting charge would apply to all new Sponsors listing a new Derivative Securities Product for the first time on the Exchange. Therefore, under the proposal Sponsors who have previously issued a new Derivative Securities Product would not be charged the proposed consulting fee. Moreover, the current Listing and Annual Fees applicable to Derivative Securities Products would remain unchanged and be applicable to all Sponsors of Derivative Securities Products.

III. Discussion and Commission's Findings

After careful review, the Commission finds that the proposed rule change is consistent with the requirements of the Act and the rules and regulations thereunder applicable to a national securities exchange. Specifically, the Commission finds that the proposal is consistent with Sections 6(b)(4) and (b)(5) of the Act,[4] which require, among other things, that the rules of an exchange (i) provide for the equitable allocation of reasonable dues, fees, and other charges among its members and issuers and other persons using its facilities, and (ii) are not designed to permit unfair discrimination between customers, issuers, brokers, or dealers.

According to the Exchange, the imposition of the proposed one-time consulting charge to new Sponsors of new Derivative Securities Products is necessary to adequately compensate the Exchange for all of the additional resources dedicated to such new Sponsors, such as the additional legal and business resources required to properly advise novice Sponsors through the listing process.[5] The Exchange believes that the proposed consulting fee would enable the Exchange to continue to provide new issuers with the level of service necessary to successfully navigate an initial launch of a Derivative Securities Product. Moreover, the Exchange has represented that the proposed new Sponsor Fee is substantially below the

[1] 15 U.S.C. 78s(b)(1).

[2] 17 CFR 240.19b–4.

[3] *See* Securities Exchange Act Release No. 60184 (June 29, 2009), 74 FR 32209 (July 7, 2009) (hereinafter referred to as ''Notice'').

[4] 15 U.S.C. 78f(b)(4) and (b)(5).

[5] *See* Notice, *supra* note 3.

initial listing fee for issuers of traditional equity securities, *e.g.,* common stock.[6]

Accordingly, the Commission believes that the Exchange's proposed rule change provides for the equitable allocation of reasonable dues, fees, and other charges among issuers and further, does not unfairly discriminate between issuers given the additional time and resources dedicated to new Sponsors of Derivative Securities Products and given that the listing fees, including the one-time consulting fee, for Derivative Securities Products is substantially below the listing fee for traditional equity securities.[7] Further, the Commission believes that the proposed one time consulting fee is equitable in that it applies uniformly to all new issuers of Derivative Securities Products. For the foregoing reasons, the Commission finds that the proposed rule change is consistent with the Act.[8]

IV. Conclusion

It is therefore ordered, pursuant to Section 19(b)(2) of the Act,[9] that the proposed rule change (SR–NYSEArca–2009–52) be, and it hereby is, approved.

For the Commission, by the Division of Trading and Markets, pursuant to delegated authority.[10]

Elizabeth M. Murphy,

Secretary.

[FR Doc. E9–19623 Filed 8–14–09; 8:45 am]

BILLING CODE 8010–01–P

SECURITIES AND EXCHANGE COMMISSION

[Release No. 34–60466; File No. SR–Phlx–2009–65]

Self-Regulatory Organizations; Notice of Filing of Proposed Rule Change by NASDAQ OMX PHLX, Inc. Relating to Strike Price Intervals of $0.50 for Options on Stocks Trading at or Below $3.00

August 10, 2009.

Pursuant to Section 19(b)(1)[1] of the Securities Exchange Act of 1934 (the ''Act'')[2] and Rule 19b–4 thereunder,[3] notice is hereby given that, on July 31, 2009, NASDAQ OMX PHLX, Inc. (''Phlx'' or ''Exchange'') filed with the Securities and Exchange Commission (the ''Commission'') the proposed rule change as described in Items I, II, and III below, which Items have been prepared by the Exchange. The Commission is publishing this notice to solicit comments on the proposed rule change from interested persons.

I. Self-Regulatory Organization's Statement of the Terms of Substance of the Proposed Rule Change

The Exchange, pursuant to Section 19(b)(1) of the Act[4] and Rule 19b–4 thereunder,[5] proposes to amend Rule 1012, Series of Options Open for Trading, Commentary .05, in order to establish strike price intervals of $0.50, beginning at $1, for certain options classes whose underlying security closed at or below $3 in its primary market on the previous trading day.

The text of the proposed rule change is available on the Exchange's Web site at *http://www.nasdaqtrader.com/micro.aspx?id=PHLXRulefilings,* at the principal office of the Exchange, and at the Commission's Public Reference Room.

II. Self-Regulatory Organization's Statement of the Purpose of, and Statutory Basis for, the Proposed Rule Change

In its filing with the Commission, the Exchange organization included statements concerning the purpose of, and basis for, the proposed rule change and discussed any comments it received on the proposed rule change. The text of those statements may be examined at the places specified in Item IV below. The Exchange has prepared summaries, set forth in sections A, B, and C below, of the most significant parts of such statements.

A. Self-Regulatory Organization's Statement of the Purpose of, and the Statutory Basis for, the Proposed Rule Change

1. Purpose

The purpose of the proposed rule change is to expand the ability of investors to hedge risks associated with stocks trading at or under $3. Currently, Commentary .05(a)(ii) to Phlx Rule 1012 provides that the interval of strike prices of series of options on individual stocks may be $2.50 or greater where the strike price is $25 or less. Additionally, Commentary .05(a)(i) to Phlx Rule 1012 allows the Exchange to establish $1 strike price intervals (the ''$1 Strike Program'') on options classes overlying no more than fifty-five individual stocks designated by the Exchange. In order to be eligible for selection into the $1 Strike Program, the underlying stock must close below $50 in its primary market on the previous trading day. If selected for the $1 Strike Program, the Exchange may list strike prices at $1 intervals from $1 to $50, but no $1 strike price may be listed that is greater than $5 from the underlying stock's closing price in its primary market on the previous day. The Exchange may also list $1 strikes on any other option class designated by another securities exchange that employs a similar $1 Strike Program its own rules.[6] The Exchange is restricted from listing any series that would result in strike prices being within $0.50 of a strike price set pursuant to Commentary .05(a)(ii) to Phlx Rule 1012 at intervals of $2.50.

The Exchange is now proposing to establish strike prices of $1, $1.50, $2, $2.50, $3 and $3.50 for certain stocks that trade at or under $3.00.[7] The listing of these strike prices will be limited to options classes whose underlying security closed at or below $3 in its primary market on the previous trading day, and which have national average daily volume that equals or exceeds 1000 contracts per day as determined by The Options Clearing Corporation during the preceding three calendar months. The listing of $0.50 strike prices would be limited to options classes overlying no more than 5 individual stocks (the ''$0.50 Strike Program'') as specifically designated by the Exchange. The Exchange would also be able to list $0.50 strike prices on any other option classes if those classes were specifically designated by other securities exchanges that employed a similar $0.50 Strike Program under their respective rules.

Currently, the Exchange may list options on stocks trading at $3 at strike prices of $1, $2, $3, $4, $5, $6, $7 and $8 if they are designated to participate

---

[6] *Id.*

[7] The Commission notes that the current listing fee for Derivative Securities Products is $5,000, while the lowest listing fee for common stock is $100,000. *See* NYSE Arca Equities, Inc. Schedule of Fees and Charges for Exchange Services.

[8] 15 U.S.C. 78f(b)(4). In approving the proposed rule change, the Commission has considered the proposed rule's impact on efficiency, competition and capital formation. *See* 15 U.S.C. 78c(f).

[9] 15 U.S.C. 78s(b)(2).

[10] 17 CFR 200.30–3(a)(12).

[1] 15 U.S.C. 78s(b)(1).

[2] 15 U.S.C. 78a.

[3] 17 CFR 240.19b–4.

[4] 15 U.S.C. 78s(b)(1).

[5] 17 CFR 240.19b–4.

[6] The Exchange may not list long-term option series (''LEAPS'') at $1 strike price intervals for any class selected for the Program.

[7] The Exchange recently amended Exchange Rule 1010, Withdrawal of Approval of Underlying Securities or Options, to eliminate the $3 market price per share requirement for continued approval for an underlying security. The amendment eliminated the prohibition against listing additional series or options on an underlying security at any time when the price per share of such underlying security is less than $3. The Exchange explained in that proposed rule change that the market price for a large number of securities has fallen below $3 in the current volatile market environment. *See* Securities Exchange Act Release No. 59346 (February 3, 2009), 74 FR 6681 (February 10, 2009).

in the $1 Strike Program.[8] If these stocks have not been selected for the Exchange's $1 Strike Program, the Exchange may list strike prices of $2.50, $5, $7.50 and so forth as provided in Commentary .05(a), but not strike prices of $1, $2, $3, $4, $6, $7 and $8.[9]

The Exchange is now proposing to amend Commentary .05 to Phlx Rule 1012 by adding new section (ii) to list strike prices on options on a number of qualifying stocks that trade at or under $3.00, not simply those stocks also participating in the $1 Strike Program, in finer intervals of $0.50, beginning at $1 up to $3.50.[10] Thus, a qualifying stock trading at $3 would have option strike prices established not just at $2.50, $5.00, $7.50 and so forth (for stocks not in the Exchange's $1 Strike Program) or just at $1, $2, $3, $4, $5, $6, $7 and $8 (for stocks designated to participate in the $1 Strike Program), but rather at strike prices established at $1, $1.50, $2, $2.50, $3 and $3.50.[11]

The Exchange believes that current market conditions demonstrate the appropriateness of the new strike prices. Recently the number of securities trading below $3.00 has increased dramatically.[12] Unless the underlying stock has been selected for the $1 Strike Program, there is only one possible in-the-money call (at $2.50) to be traded if an underlying stock trades at $3.00. Similarly, unless the underlying stock has been selected for the $1 Strike Program, only one out-of-the-money strike price choice within 100% of a stock price of $3 is available if an investor wants to purchase out-of-the-money calls. Stated otherwise, a purchaser would need over a 100% move in the underlying stock price in order to have a call option at any strike price other than the $5 strike price become in-the-money. If the stock is selected for the $1 Strike Program, the available strike price choices are somewhat broader, but are still greatly limited by the proximity of the $3 stock price to zero, and the very large percent gain or loss in the underlying stock price, relative to a higher priced stock, that would be required in order for strikes set at $1 or away from the stock price to become in-the-money and serve their intended hedging purpose.

As a practical matter, a low-priced stock by its very nature requires narrow strike price intervals in order for investors to have any real ability to hedge the risks associated with such a security or execute other related options trading strategies. The current restriction on strike price intervals, which prohibits intervals of less than $2.50 (or $1 for stocks in the $1 Strike Program) for options on stocks trading at or below $3, could have a negative affect on investors. The Exchange believes that the proposed $0.50 strike price intervals would provide investors with greater flexibility in the trading of equity options that overlie lower priced stocks by allowing investors to establish equity option positions that are better tailored to meet their investment objectives. The proposed new strike prices would enable investors to more closely tailor their investment strategies and decisions to the movement of the underlying security. As the price of stocks decline below $3 or even $2, the availability of options with strike prices at intervals of $0.50 could provide investors with opportunities and strategies to minimize losses associated with owning a stock declining in price.

With regard to the impact on system capacity, Phlx has analyzed its capacity and represents that it and the Options Price Reporting Authority have the necessary systems capacity to handle the additional traffic associated with the listing and trading of an expanded number of series as proposed by this filing.

2. Statutory Basis

The Exchange believes that its proposal is consistent with Section 6(b) of the Act[13] in general, and furthers the objectives of Section 6(b)(5) of the Act[14] in particular, in that it is designed to promote just and equitable principles of trade, to remove impediments to and perfect the mechanism of a free and open market and a national market system, and, in general to protect investors and the public interest, by expanding the ability of investors to hedge risks associated with stocks trading at or under $3. The proposal should create greater trading and hedging opportunities and flexibility, and provide customers with the ability to more closely tailor investment strategies to the price movement of the underlying stocks, trading in many of which is highly liquid.

B. Self-Regulatory Organization's Statement on Burden on Competition

The Exchange does not believe that the proposed rule change will impose any burden on competition that is not necessary or appropriate in furtherance of the purposes of the Act.

C. Self-Regulatory Organization's Statement on Comments on the Proposed Rule Change Received From Members, Participants, or Others

No written comments were solicited or received with respect to the proposed rule change.

III. Date of Effectiveness of the Proposed Rule Change and Timing for Commission Action

Within 35 days of the date of publication of this notice in the **Federal Register** or within such longer period (i) as the Commission may designate up to 90 days of such date if it finds such longer period to be appropriate and publishes its reasons for so finding or (ii) as to which the Exchange consents, the Commission will:

(A) By order approve the proposed rule change, or

(B) institute proceedings to determine whether the proposed rule change should be disapproved.

IV. Solicitation of Comments

Interested persons are invited to submit written data, views, and arguments concerning the foregoing, including whether the proposed rule change is consistent with the Act. Comments may be submitted by any of the following methods:

Electronic Comments

- Use the Commission's Internet comment form (*http://www.sec.gov/rules/sro.shtml*); or
- Send an e-mail to *rule-comments@sec.gov.* Please include File Number SR–Phlx–2009–65 on the subject line.

Paper Comments

- Send paper comments in triplicate to Elizabeth M. Murphy, Secretary, Securities and Exchange Commission, 100 F Street, NE., Washington, DC 20549–1090.

[8] Additionally, market participants may be able to trade $2.50 strikes on the same option at another exchange, if that exchange has elected not to select the stock for participation in its own similar $1 Strike Program.

[9] Again, market participants may also be able to trade the option at $1 strike price intervals on other exchanges, if those exchanges have selected the stock for participation in their own similar $1 Strike Program.

[10] Current sections (ii), (iii) and (iv) would be renumbered as sections (iii), (iv) and (v) respectively.

[11] The option on the qualifying stock could also have strike prices set at $5, $7.50 and so forth at $2.50 intervals (pursuant to Commentary .05(a)(ii) to Phlx Rule 1012) or, if it has been selected for the $1 Strike Program, at $4, $5, $6, $7 and $8.

[12] As of July 31, 2009, stocks trading at or below $3 include E*Trade Financial Corporation, Ambac Financial Group, Inc., Alcael-Lucent, Federal Home Loan Mortgage Corporation (Freddie Mac) and Federal National Mortgage Association (Fannie Mae). A number of these stocks are widely held and actively traded equities, and the options overlying these stocks also trade actively on Phlx.

[13] 15 U.S.C. 78f(b).

[14] 15 U.S.C. 78f(b)(5).

All submissions should refer to File Number SR–Phlx–2009–65. This file number should be included on the subject line if e-mail is used. To help the Commission process and review your comments more efficiently, please use only one method. The Commission will post all comments on the Commission's Internet Web site (*http://www.sec.gov/rules/sro.shtml*). Copies of the submission, all subsequent amendments, all written statements with respect to the proposed rule change that are filed with the Commission, and all written communications relating to the proposed rule change between the Commission and any person, other than those that may be withheld from the public in accordance with the provisions of 5 U.S.C. 552, will be available for inspection and copying in the Commission's Public Reference Room, 100 F Street, NE., Washington, DC 20549, on official business days between the hours of 10 a.m. and 3 p.m. Copies of the filing also will be available for inspection and copying at the principal office of the Exchange. All comments received will be posted without change; the Commission does not edit personal identifying information from submissions. You should submit only information that you wish to make available publicly. All submissions should refer to File Number SR–Phlx–2009–65 and should be submitted on or before September 8, 2009.

For the Commission, by the Division of Trading and Markets, pursuant to delegated authority.[15]

Florence E. Harmon,

Deputy Secretary.

[FR Doc. E9–19573 Filed 8–14–09; 8:45 am]

BILLING CODE 8010–01–P

[15] 17 CFR 200.30–3(a)(12).

SECURITIES AND EXCHANGE COMMISSION

[Release No. 34–60464; File No. SR–BATS–2009–027]

Self-Regulatory Organizations; BATS Exchange, Inc.; Notice of Filing and Immediate Effectiveness of Proposed Rule Change Related to Fees for Use of BATS Exchange, Inc.

August 10, 2009.

Pursuant to Section 19(b)(1) of the Securities Exchange Act of 1934 (the ''Act''),[1] and Rule 19b–4 thereunder,[2] notice is hereby given that on July 29, 2009, BATS Exchange, Inc. (the ''Exchange'' or ''BATS'') filed with the Securities and Exchange Commission (''Commission'') the proposed rule change as described in Items I, II and III below, which Items have been prepared by the Exchange. BATS has designated the proposed rule change as one establishing or changing a member due, fee, or other charge imposed by the Exchange under Section 19(b)(3)(A)(ii) of the Act[3] and Rule 19b–4(f)(2) thereunder,[4] which renders the proposed rule change effective upon filing with the Commission. The Commission is publishing this notice to solicit comments on the proposed rule change from interested persons.

[1] 15 U.S.C. 78s(b)(1).

[2] 17 CFR 240.19b–4.

[3] 15 U.S.C. 78s(b)(3)(A)(ii).

[4] 17 CFR 240.19b–4(f)(2).

I. Self-Regulatory Organization's Statement of the Terms of Substance of the Proposed Rule Change

The Exchange proposes to modify its fee schedule applicable to use of the Exchange. While changes to the fee schedule pursuant to this proposal will be effective upon filing, the changes will become operative on August 1, 2009.

The text of the proposed rule change is available at the Exchange's Web site at *http://www.batstrading.com,* at the principal office of the Exchange, and at the Commission's Public Reference Room.

II. Self-Regulatory Organization's Statement of the Purpose of, and Statutory Basis for, the Proposed Rule Change

In its filing with the Commission, the Exchange included statements concerning the purpose of and basis for the proposed rule change and discussed any comments it received on the proposed rule change. The text of these statements may be examined at the places specified in Item IV below. The Exchange has prepared summaries, set forth in Sections A, B, and C below, of the most significant parts of such statements.

(A) Self-Regulatory Organization's Statement of the Purpose of, and Statutory Basis for, the Proposed Rule Change

1. Purpose

The Exchange proposes to modify its fee schedule applicable to use of the Exchange effective August 1, 2009, in order to change the fee charged by the Exchange for odd lot orders routed to NYSE Arca. Due to the pricing structure at NYSE Arca, the Exchange currently charges higher fees for odd lot orders to the extent such odd lot orders are routed to and executed at NYSE Arca. Effective August 1, 2009, NYSE Arca will begin applying its standard fees for round lot executions to odd lot executions.[5] Accordingly, the Exchange proposes to delete the specific fees charged for odd lot orders routed to NYSE Arca, and instead, will charge the same fees that it charges for routed orders generally. For instance, an odd lot order routed through the Exchange's CYCLE or RECYCLE routing strategy will be charged $0.0026 per share wherever such order is executed, including NYSE Arca. If such odd lot order is in a stock priced below $1.00, then the Exchange will charge 0.26% of the total dollar value of the trade to the extent the order was routed to and executed at any venue (including NYSE Arca) pursuant to the Exchange's CYCLE or RECYCLE routing strategy.

2. Statutory Basis

The Exchange believes that the proposed rule change is consistent with the requirements of the Act and the rules and regulations thereunder that are applicable to a national securities exchange, and, in particular, with the requirements of Section 6 of the Act.[6] Specifically, the Exchange believes that the proposed rule change is consistent with Section 6(b)(4) of the Act,[7] in that it provides for the equitable allocation of reasonable dues, fees and other charges among members and other persons using any facility or system which the Exchange operates or controls. The Exchange notes that it operates in a highly competitive market in which market participants can readily direct order flow to competing venues if they deem fee levels at a particular venue to be excessive. Finally, the Exchange believes that the proposed rates are equitable in that they apply uniformly to all Members.

(B) Self-Regulatory Organization's Statement on Burden on Competition

The Exchange does not believe that the proposed rule change imposes any burden on competition.

(C) Self-Regulatory Organization's Statement on Comments on the Proposed Rule Change Received From Members, Participants or Others

No written comments were solicited or received.

[5] *See* NYSE Arca Trader Update, July 20, 2009, *available at http://www.nyse.com/pdfs/Arca_Fee_Schedule_Update.pdf.*

[6] 15 U.S.C. 78f.

[7] 15 U.S.C. 78f(b)(4).

III. Date of Effectiveness of the Proposed Rule Change and Timing for Commission Action

The foregoing proposed rule change has been designated as a fee change pursuant to Section 19(b)(3)(A)(ii) of the Act [8] and Rule 19b–4(f)(2) thereunder,[9] because it establishes or changes a due, fee or other charge imposed on members by the Exchange. Accordingly, the proposal is effective upon filing with the Commission.

At any time within 60 days of the filing of the proposed rule change, the Commission may summarily abrogate such rule change if it appears to the Commission that such action is necessary or appropriate in the public interest, for the protection of investors, or otherwise in furtherance of the purposes of the Act.

IV. Solicitation of Comments

Interested persons are invited to submit written data, views and arguments concerning the foregoing, including whether the proposed rule change is consistent with the Act. Comments may be submitted by any of the following methods:

Electronic Comments

- Use the Commission's Internet comment form (*http://www.sec.gov/rules/sro.shtml*); or
- Send an e-mail to *rule-comments@sec.gov.* Please include File Number SR–BATS–2009–027 on the subject line.

Paper Comments

- Send paper comments in triplicate to Elizabeth M. Murphy, Secretary, Securities and Exchange Commission, 100 F Street, NE., Washington, DC 20549–1090.

All submissions should refer to File Number SR–BATS–2009–027. This file number should be included on the subject line if e-mail is used. To help the Commission process and review your comments more efficiently, please use only one method. The Commission will post all comments on the Commission's Internet Web site (*http://www.sec.gov/rules/sro.shtml*). Copies of the submission, all subsequent amendments, all written statements with respect to the proposed rule change that are filed with the Commission, and all written communications relating to the proposed rule change between the Commission and any person, other than those that may be withheld from the public in accordance with the provisions of 5 U.S.C. 552, will be available for inspection and copying in the Commission's Public Reference Room, 100 F Street, NE., Washington, DC 20549, on official business days between the hours of 10 a.m. and 3 p.m. Copies of such filing also will be available for inspection and copying at the principal office of BATS. All comments received will be posted without change; the Commission does not edit personal identifying information from submissions. You should submit only information that you wish to make available publicly. All submissions should refer to File Number SR–BATS–2009–027 and should be submitted on or before September 8, 2009.

For the Commission, by the Division of Trading and Markets, pursuant to delegated authority.[10]

Florence E. Harmon,

Deputy Secretary.

[FR Doc. E9–19574 Filed 8–14–09; 8:45 am]

BILLING CODE 8010–01–P

[8] 15 U.S.C. 78s(b)(3)(A)(ii).

[9] 17 CFR 240.19b–4(f)(2).

[10] 17 CFR 200.30–3(a)(12).

SECURITIES AND EXCHANGE COMMISSION

[Release No. 34–60469; File No. SR–NYSEArca–2009–73]

Self-Regulatory Organizations; NYSE Arca, Inc.; Notice of Filing and Immediate Effectiveness of Proposed Rule Change Amending Rule 6.76A—Order Execution-OX and Proposing New Rule 6.88—Directed Orders

August 10, 2009.

Pursuant to Section 19(b)(1) [1] of the Securities Exchange Act of 1934 (the ''Act'') [2] and Rule 19b–4 thereunder,[3] notice is hereby given that, on August 5, 2009, NYSE Arca, Inc. (''NYSE Arca'' or the ''Exchange'') filed with the Securities and Exchange Commission (the ''Commission'') the proposed rule change as described in Items I and II below, which Items have been prepared by the self-regulatory organization. The Commission is publishing this notice to solicit comments on the proposed rule change from interested persons.

I. Self-Regulatory Organization's Statement of the Terms of Substance of the Proposed Rule Change

The Exchange is proposing (i) new Rule 6.88 to describe Directed Orders, (ii) to amend Rule 6.76A to describe how Directed Orders are allocated upon execution, (iii) define Directed Order Market Makers, Order Flow Providers, and Directed Orders, and (iv) make other amendments to provide for Directed Orders. The text of the proposed rule change is attached as Exhibit 5 to the 19b–4 form. A copy of this filing is available on the Exchange's Web site at *http://www.nyse.com,* at the Exchange's principal office and at the Commission's Public Reference Room.

II. Self-Regulatory Organization's Statement of the Purpose of, and Statutory Basis for, the Proposed Rule Change

In its filing with the Commission, the self-regulatory organization included statements concerning the purpose of, and basis for, the proposed rule change and discussed any comments it received on the proposed rule change. The text of those statements may be examined at the places specified in Item IV below. The Exchange has prepared summaries, set forth in sections A, B, and C below, of the most significant parts of such statements.

A. Self-Regulatory Organization's Statement of the Purpose of, and Statutory Basis for, the Proposed Rule Change

1. Purpose

NYSE Arca proposes new Rule 6.88, Directed Orders, under which Market Makers may receive Directed Orders, and also proposes to amend Rule 6.76A to describe the allocation of Directed Orders upon execution. Additionally, the Exchange proposes to define Directed Orders, Order Flow Provider, and Directed Order Market Maker (''DOMM''), and make other rule modifications to provide for Directed Orders.

Proposed Rule 6.88, Directed Orders, is based on NYSE Amex Rule 964.1NY. It permits any Market Maker to receive Directed Orders, provided the Market Maker is quoting at the National Best Bid/Offer (''NBBO'') at the time of receipt. It also describes how Directed Orders are to be executed if the DOMM is not at the NBBO at time of receipt. Additionally, the proposed Rule requires a DOMM to meet a 90% quoting obligation in any class in which a Directed Order is received. The Exchange believes it is appropriate to oblige DOMMs to a higher quoting standard in return for the privilege of receiving directed order flow.

The Exchange is also proposing to amend Rule 6.76A the circumstances by which a DOMM may receive an allocation entitlement up to 40% of an incoming order if quoting at the NBBO at the time the NYSE Arca System

[1] 15 U.S.C. 78s(b)(1).

[2] 15 U.S.C. 78a.

[3] 17 CFR 240.19b–4.

receives a Directed Order. A DOMM will receive up to 40% of the remaining balance of an order, or the DOMM's share in the order of ranking, whichever is greater, provided that any Customer orders ranked ahead of the DOMM are satisfied first. However, if the DOMM is not at the NBBO, the order will be allocated as if it were not a Directed Order.

The Exchange is proposing new Rule 6.62(z) to define Directed Orders, and also new Rule 6.1A(a)(20) to define Directed Order Market Maker and 6.1A(a)(21) to define Order Flow Provider.

Lastly, the Exchange is proposing to modify Rule 6.82(d)(2)—Guaranteed Participation, to clarify that LMMs are entitled to a trade allocation in accordance with Rule 6.76A, and that LMMs are not entitled to any guaranteed allocation on Directed Orders that trade with a Directed Order Market Maker. If the DOMM is not quoting at the NBBO, but the LMM's quote is at the NBBO, the LMM will be entitled to a trade allocation in accordance with Rule 6.76A. The LLM will be entitled to the same allocation as currently applicable under Rule 6.76A.

The trade allocation described in Rule 6.76A is structured so that no order will be subject to a guaranteed allocation greater than 40% of its size after satisfying any Customer orders ranked ahead of any guaranteed recipient. Additionally, it would be considered a violation of just and equitable principals of trade and a misuse of non-public information for a Directed Order Market Maker to become aware of an impending Directed Order so as to improve the quote to momentarily match the NBBO, and then worsen the price of the quote following execution of the Directed Order.

2. Statutory Basis

The Exchange believes the proposed rule change is consistent with Section 6(b) of the Act[4] in general, and furthers the objectives of Section 6(b)(5) of the Act, in that it is designed to promote just and equitable principles of trade, remove impediments to and perfect the mechanisms of a free and open market and a national market system and, in general, to protect investors and the public interest, as it will provide greater incentive for Directed Order Market Makers to quote at the NBBO, and thereby provide a more competitive market structure for investors in general.

[4] 15 U.S.C. 78f(b).

B. Self-Regulatory Organization's Statement on Burden on Competition

The Exchange does not believe that the proposed rule change will impose any burden on competition that is not necessary or appropriate in furtherance of the purposes of the Act.

C. Self-Regulatory Organization's Statement on Comments on the Proposed Rule Change Received From Members, Participants, or Others

No written comments were solicited or received with respect to the proposed rule change.

III. Date of Effectiveness of the Proposed Rule Change and Timing for Commission Action

Because the foregoing proposed rule change: (i) Does not significantly affect the protection of investors or the public interest; (ii) does not impose any significant burden on competition; and (iii) by its terms, does not become operative for 30 days from the date on which it was filed, or such shorter time as the Commission may designate, if consistent with the protection of investors and the public interest, it has become effective pursuant to Section 19(b)(3)(A) of the Act[5] and Rule 19b–4(f)(6) thereunder.[6]

At any time within 60 days of the filing of the proposed rule change, the Commission may summarily abrogate such rule change if it appears to the Commission that such action is necessary or appropriate in the public interest, for the protection of investors, or otherwise in furtherance of the purposes of the Act.

IV. Solicitation of Comments

Interested persons are invited to submit written data, views, and arguments concerning the foregoing, including whether the proposed rule change is consistent with the Act. Comments may be submitted by any of the following methods:

Electronic Comments

- Use the Commission's Internet comment form (*http://www.sec.gov/rules/sro.shtml*); or
- Send an e-mail to *rule-comments@sec.gov.* Please include File Number SR–NYSEArca–2009–73 on the subject line.

[5] 15 U.S.C. 78s(b)(3)(A).

[6] 17 CFR 240.19b–4(f)(6). In addition, Rule 19b–4(f)(6)(iii) requires a self-regulatory organization to give the Commission written notice of its intent to file the proposed rule change at least five business days prior to the date of filing of the proposed rule change, or such shorter time as designated by the Commission. The Exchange has complied with this requirement.

Paper Comments

- Send paper comments in triplicate to Elizabeth M. Murphy, Secretary, Securities and Exchange Commission, 100 F Street, NE., Washington, DC 20549–1090.

All submissions should refer to File Number SR–NYSEArca–2009–73. This file number should be included on the subject line if e-mail is used. To help the Commission process and review your comments more efficiently, please use only one method. The Commission will post all comments on the Commission's Internet Web site (*http://www.sec.gov/rules/sro.shtml*). Copies of the submission, all subsequent amendments, all written statements with respect to the proposed rule change that are filed with the Commission, and all written communications relating to the proposed rule change between the Commission and any person, other than those that may be withheld from the public in accordance with the provisions of 5 U.S.C. 552, will be available for inspection and copying in the Commission's Public Reference Room on official business days between the hours of 10 a.m. and 3 p.m. Copies of such filing also will be available for inspection and copying at the principal office of the Exchange. All comments received will be posted without change; the Commission does not edit personal identifying information from submissions. You should submit only information that you wish to make available publicly. All submissions should refer to File Number SR–NYSEArca–2009–73 and should be submitted on or before September 8, 2009.

For the Commission, by the Division of Trading and Markets, pursuant to delegated authority.[7]

Elizabeth M. Murphy,

Secretary.

[FR Doc. E9–19575 Filed 8–14–09; 8:45 am]

BILLING CODE 8010–01–P

[7] 17 CFR 200.30–3(a)(12).

DEPARTMENT OF STATE

[Public Notice: 6727]

30-Day Notice of Proposed Information Collection: Request for Reconsideration of Proviso(s); OMB Control Number 1405–0172

ACTION: Notice of request for public comment and submission to OMB of proposed collection of information.

SUMMARY: The Department of State has submitted the following information collection request to the Office of Management and Budget (OMB) for approval in accordance with the Paperwork Reduction Act of 1995.

Title of Information Collection: Request for Reconsideration of Proviso(s) Determination.

OMB Control Number: 1405–0172.

Type of Request: Extension of currently approved collection.

Originating Office: Bureau of Political Military Affairs, Directorate of Defense Trade Controls, PM/DDTC.

Form Number: None.

Respondents: Business organizations.

Estimated Number of Respondents: 120 (total).

Estimated Number of Responses: 350 (per year).

Average Hours per Response: 1 hour.

Total Estimated Burden: 350 hours (per year).

Frequency: On occasion.

Obligation To Respond: Mandatory.

DATES: Submit comments to the Office of Management and Budget (OMB) for up to 30 days from August 17, 2009.

The Office of Management and Budget (OMB), who may be reached at 202–395–4718. You may submit comments by any of the following methods:

E-mail: Kastrich@omb.eop.gov. You must include the DS form number, information collection title, and OMB control number in the subject line of your message.

Mail (paper, disk, or CD–ROM submissions): Office of Information and Regulatory Affairs, Office of Management and Budget, 725 17th Street, NW., Washington, DC 20503.

Fax: 202–395–5806.

FOR FURTHER INFORMATION CONTACT: You may obtain copies of the proposed information collection and supporting documents from Mary F. Sweeney, PM/DDTC, SA–1, 12th Floor, Directorate of Defense Trade Controls, Bureau of Political Military Affairs, U.S. Department of State, Washington, DC 20522–0112, who may be reached on (202) 663–2865 or at *sweeneymf@state.gov*.

SUPPLEMENTARY INFORMATION: We are soliciting public comments to permit the Department to: Evaluate whether the proposed collection of information is necessary to properly perform our functions. Evaluate the accuracy of our estimate of the burden of the proposed collection, including the validity of the methodology and assumptions used. Enhance the quality, utility, and clarity of the information to be collected. Minimize the reporting burden on those who are to respond, including the use of automated collection techniques or other forms of technology.

Abstract of proposed collection: To request a change in the proviso(s) placed on an export license, the applicant submits a letter requesting reconsideration of a particular proviso(s).

Methodology: This information collection is an exchange of letters and may be sent to the Directorate of Defense Controls via mail.

Dated: August 10, 2009.

Robert S. Kovac,

Acting Deputy Assistant Secretary for Defense Trade, Bureau of Political-Military Affairs, Department of State.

[FR Doc. E9–19724 Filed 8–14–09; 8:45 am]

BILLING CODE 4710–25–P

DEPARTMENT OF STATE

[Public Notice: 6725]

30-Day Notice of Proposed Information Collection: Form DS–6001, Request for Advisory Opinion; OMB Control Number 1405–0174

ACTION: Notice of request for public comment and submission to OMB of proposed collection of information.

SUMMARY: The Department of State has submitted the following information collection request to the Office of Management and Budget (OMB) for approval in accordance with the Paperwork Reduction Act of 1995.

Title of Information Collection: Request for Advisory Opinion.

OMB Control Number: 1405–0174.

Type of Request: Extension of currently approved collection.

Originating Office: Bureau of Political Military Affairs, Directorate of Defense Trade Controls, PM/DDTC.

Form Number: DS–6001.

Respondents: Business organizations.

Estimated Number of Respondents: 170 (total).

Estimated Number of Responses: 250 (per year).

Average Hours per Response: 1 hour.

Total Estimated Burden: 250 hours (per year).

Frequency: On occasion.

Obligation To Respond: Mandatory.

DATES: Submit comments to the Office of Management and Budget (OMB) for up to 30 days from August 17, 2009.

ADDRESSES: Direct comments and questions to Katherine Astrich, the Department of State Desk Officer in the Office of Information and Regulatory Affairs at the Office of Management and Budget (OMB), who may be reached at 202–395–4718. You may submit comments by any of the following methods:

E-mail: Kastrich@omb.eop.gov. You must include the DS form number, information collection title, and OMB control number in the subject line of your message.

Mail (paper, disk, or CD–ROM submissions): Office of Information and Regulatory Affairs, Office of Management and Budget, 725 17th Street, NW., Washington, DC 20503.

Fax: 202–395–5806

FOR FURTHER INFORMATION CONTACT: You may obtain copies of the proposed information collection and supporting documents from Mary F. Sweeney, PM/DDTC, SA–1, 12th Floor, Directorate of Defense Trade Controls, Bureau of Political Military Affairs, U.S. Department of State, Washington, DC. 20522–0112, who may be reached on (202) 663–2865 or at *sweeneymf@state.gov*.

SUPPLEMENTARY INFORMATION: We are soliciting public comments to permit the Department to:

Evaluate whether the proposed collection of information is necessary to properly perform our functions.

Evaluate the accuracy of our estimate of the burden of the proposed collection, including the validity of the methodology and assumptions used.

Enhance the quality, utility, and clarity of the information to be collected.

Minimize the reporting burden on those who are to respond, including the use of Automated collection techniques or other forms of technology.

Abstract of proposed collection: Form DS–6001 is used when an exporter desires an opinion as to whether the Directorate of Defense Trade Controls would likely grant a license or other approval for a particular export transaction involving defense articles or defense services. Also, the DS–6001 may be used to satisfy the prior approval requirements of 22 CFR 126.8 for a proposal to sell or manufacture abroad significant military equipment to foreign persons.

Methodology: This information collection may be sent to the Directorate of Defense Controls via mail.

August 10, 2009.

Robert S. Kovac,

Acting Deputy Assistant Secretary for Defense Trade, Bureau of Political-Military Affairs, Department of State.

[FR Doc. E9–19727 Filed 8–14–09; 8:45 am]

BILLING CODE 4710–25–P

DEPARTMENT OF STATE

[Public Notice: 6728]

30-Day Notice of Proposed Information Collection: Form DS–6002, Prior Notification; OMB Control Number 1405–0171

ACTION: Notice of request for public comment and submission to OMB of proposed collection of information.

SUMMARY: The Department of State has submitted the following information collection request to the Office of Management and Budget (OMB) for approval in accordance with the Paperwork Reduction Act of 1995.

Title of Information Collection: Prior Notification.

OMB Control Number: 1405–0171.

Type of Request: Extension of currently approved collection.

Originating Office: Bureau of Political Military Affairs, Directorate of Defense Trade Controls, PM/DDTC.

Form Number: DS–6002.

Respondents: Business organizations.

Estimated Number of Respondents: 18 (total).

Estimated Number of Responses: 47 (per year).

Average Hours Per Response: 1 hour.

Total Estimated Burden: 47 hours (per year).

Frequency: On occasion.

Obligation to Respond: Mandatory.

DATES: Submit comments to the Office of Management and Budget (OMB) for up to 30 days from August 17, 2009.

Management and Budget (OMB), who may be reached at 202–395–4718. You may submit comments by any of the following methods:

E-mail: Kastrich@omb.eop.gov. You must include the DS form number, information collection title, and OMB control number in the subject line of your message.

E-mail: Kastrich@omb.eop.gov. You must include the DS form number, information collection title, and OMB control number in the subject line of your message.

Mail (paper, disk, or CD–ROM submissions): Office of Information and Regulatory Affairs, Office of Management and Budget, 725 17th Street, NW., Washington, DC 20503.

Fax: 202–395–5806.

FOR FURTHER INFORMATION CONTACT: You may obtain copies of the proposed information collection and supporting documents from Mary F. Sweeney, PM/DDTC, SA–1, 12th Floor, Directorate of Defense Trade Controls, Bureau of Political Military Affairs, U.S. Department of State, Washington, DC 20522–0112, who may be reached on (202) 663–2865 or at *sweeneymf@state.gov*.

SUPPLEMENTARY INFORMATION: We are soliciting public comments to permit the Department to:

Evaluate whether the proposed collection of information is necessary to properly perform our functions.

Evaluate the accuracy of our estimate of the burden of the proposed collection, including the validity of the methodology and assumptions used.

Enhance the quality, utility, and clarity of the information to be collected.

Minimize the reporting burden on those who are to respond, including the use of automated collection techniques or other forms of technology.

Abstract of proposed collection: An exporter is required to submit prior notification in accordance with 22 CFR 126.8(a)(2) regarding the sale of significant military equipment to foreign persons.

Methodology: This information collection may be sent to the Directorate of Defense Controls via mail.

Dated: August 10, 2009.

Robert S. Kovac,

Acting Deputy Assistant Secretary for Defense Trade, Bureau of Political-Military Affairs, Department of State.

[FR Doc. E9–19726 Filed 8–14–09; 8:45 am]

BILLING CODE 4710–25–P

DEPARTMENT OF STATE

[Public Notice: 6726]

30-Day Notice of Proposed Information Collection: Form DS–6004, Request To Change End User, End Use and/or Destination of Hardware; OMB Control Number 1405–0173

ACTION: Notice of request for public comment and submission to OMB of proposed collection of information.

SUMMARY: The Department of State has submitted the following information collection request to the Office of Management and Budget (OMB) for approval in accordance with the Paperwork Reduction Act of 1995.

Title of Information Collection: Request to Change End User, End Use and/or Destination or Hardware.

OMB Control Number: 1405–0173.

Type of Request: Extension of currently approved collection.

Originating Office: Bureau of Political Military Affairs, Directorate of Defense Trade Controls, PM/DDTC.

Form Number: DS–6004.

Respondents: Business organizations.

Estimated Number of Respondents: 300 (total).

Estimated Number of Responses: 1,470 (per year).

Average Hours Per Response: 1 hour.

Total Estimated Burden: 1,470 hours (per year).

Frequency: On Occasion.

Obligation to Respond: Mandatory.

DATES: Submit comments to the Office of Management and Budget (OMB) for up to 30 days from August 17, 2009.

ADDRESSES: Direct comments and questions to Katherine Astrich, the Department of State Desk Officer in the Office of Information and Regulatory Affairs at the Office of Management and Budget (OMB), who may be reached at 202–395–4718. You may submit comments by any of the following methods:

E-mail: Kastrich@omb.eop.gov. You must include the DS form number, information collection title, and OMB control number in the subject line of your message.

Mail (paper, disk, or CD–ROM submissions): Office of Information and Regulatory Affairs, Office of Management and Budget, 725 17th Street, NW., Washington, DC 20503.

Fax: 202–395–5806.

FOR FURTHER INFORMATION CONTACT: You may obtain copies of the proposed information collection and supporting documents from Mary F. Sweeney, PM/DDTC, SA–1, 12th Floor, Directorate of Defense Trade Controls, Bureau of Political Military Affairs, U.S. Department of State, Washington, DC 20522–0112, who may be reached on (202) 663–2865 or at *sweeneymf@state.gov*.

SUPPLEMENTARY INFORMATION: We are soliciting public comments to permit the Department to:

Evaluate whether the proposed collection of information is necessary to properly perform our functions.

Evaluate the accuracy of our estimate of the burden of the proposed collection, including the validity of the methodology and assumptions used.

Enhance the quality, utility, and clarity of the information to be collected.

Minimize the reporting burden on those who are to respond, including the use of Automated collection techniques or other forms of technology.

Abstract of proposed collection: Form DS–6004 is used to request approval prior to any sale, transfer, transshipment, or disposal of classified or unclassified defense articles, whether permanent or temporary to any end user, end use, or destination other than as stated on the license or other

approval or on a Shipper's Export Declaration.

Methodology: This information collection may be sent to the Directorate of Defense Controls via mail.

Dated: August 10, 2009.

Robert S. Kovac,

Acting Deputy Assistant, Secretary for Defense Trade, Bureau of Political-Military Affairs, Department of State.

[FR Doc. E9–19725 Filed 8–14–09; 8:45 am]

BILLING CODE 4710–25–P

DEPARTMENT OF STATE

[Public Notice 6729]

Culturally Significant Objects Imported for Exhibition Determinations: ''Korean Art''

SUMMARY: Notice is hereby given of the following determinations: Pursuant to the authority vested in me by the Act of October 19, 1965 (79 Stat. 985; 22 U.S.C. 2459), Executive Order 12047 of March 27, 1978, the Foreign Affairs Reform and Restructuring Act of 1998 (112 Stat. 2681, *et seq.;* 22 U.S.C. 6501 note, *et seq.*), Delegation of Authority No. 234 of October 1, 1999, Delegation of Authority No. 236 of October 19, 1999, as amended, and Delegation of Authority No. 257 of April 15, 2003 [68 FR 19875], I hereby determine that the objects to be included in the exhibition ''Korean Art,'' imported from abroad for temporary exhibition within the United States, are of cultural significance. The objects are imported pursuant to a loan agreement with the foreign owner or custodian. I also determine that the exhibition or display of the exhibit objects at the Los Angeles County Museum of Art, Los Angeles, CA, from on or about September 9, 2009, until on or about December 13, 2009, and at possible additional exhibitions or venues yet to be determined, is in the national interest. Public Notice of these Determinations is ordered to be published in the **Federal Register**.

FOR FURTHER INFORMATION CONTACT: For further information, including a list of the exhibit objects, contact Carol B. Epstein, Attorney-Adviser, Office of the Legal Adviser, U.S. Department of State (telephone: 202/453–8048). The address is U.S. Department of State, SA–44, 301 4th Street, SW., Room 700, Washington, DC 20547–0001.

Dated: August 8, 2009.

Maura M. Pally,

Deputy Assistant Secretary for Professional and Cultural Exchanges, Bureau of Educational and Cultural Affairs, Department of State.

[FR Doc. E9–19722 Filed 8–14–09; 8:45 am]

BILLING CODE 4710–05–P

DEPARTMENT OF STATE

[Public Notice 6730]

In the Matter of the Designation of Revolutionary Struggle aka Epanastatikos Aghonas as a Specially Designated Global Terrorist Pursuant to Section 1(b) of Executive Order 13224, as Amended

Acting under the authority of and in accordance with section 1(b) of Executive Order 13224 of September 23, 2001, as amended by Executive Order 13268 of July 2, 2002, Executive Order 13284 of January 23, 2003, and Executive Order 13372 of February 16, 2005, I hereby determine that the organization known as Revolutionary Struggle (aka Epanastatikos Aghonas) has committed, or poses a significant risk of committing, acts of terrorism that threaten the security of U.S. nationals or the national security, foreign policy, or economy of the United States.

Consistent with the determination in section 10 of Executive Order 13224 that ''for those persons * * * determined to be subject to the order who might have a constitutional presence in the United States * * * prior notice to such persons of measures to be taken pursuant to this order would render these measures ineffectual,'' I determine that no prior notice needs to be provided to any person subject to this determination who might have a constitutional presence in the United States, because to do so would render ineffectual the measures authorized in the Order.

This notice shall be published in the **Federal Register**.

Dated: July 31, 2009.

Hillary Rodham Clinton,

Secretary of State, Department of State.

[FR Doc. E9–19723 Filed 8–14–09; 8:45 am]

BILLING CODE 4710–10–P

OFFICE OF THE UNITED STATES TRADE REPRESENTATIVE

Trade Policy Staff Committee; Public Comments on the Caribbean Basin Economic Recovery Act and the Caribbean Basin Trade Partnership Act: Report to Congress

AGENCY: Office of the United States Trade Representative.

ACTION: Notice and request for public comment.

SUMMARY: The Trade Policy Staff Committee (TPSC) is seeking the views of interested parties on the operation of the Caribbean Basin Economic Recovery Act (CBERA), as amended by the Caribbean Basin Trade Partnership Act (CBTPA) (19 U.S.C. 2701 *et seq.*). Section 212(f) of the CBERA, as amended, requires the President to submit a report to Congress regarding the operation of the CBERA and CBTPA (together commonly referred to as the Caribbean Basin Initiative, or CBI) on or before December 31, 2001, and every two years thereafter. The TPSC invites written comments concerning the operation of the CBI, including comments on the performance of each CBERA and CBTPA beneficiary country, as the case may be, under the criteria described in sections 212(b), 212(c), and 213(b)(5)(B) of the CBERA, as amended. This information will be used in the preparation of a report to the U.S. Congress on the operation of the program.

DATES: Public comments are due at USTR no later than 5 p.m., September 30, 2009.

ADDRESSES: Comments should be submitted electronically via the Internet at *http://www.regulations.gov.* For alternatives to on-line submissions please contact Gloria Blue, Executive Secretary, Trade Policy Staff Committee, at (202) 395–3475.

FOR FURTHER INFORMATION CONTACT: For procedural questions concerning written comments, contact Gloria Blue, Executive Secretary, Trade Policy Staff Committee, at (202) 395–3475. All other questions should be directed to Kent Shigetomi, Office of the Americas, Office of the United States Trade Representative, 600 17th Street, NW., Room 523, Washington, DC 20508. The telephone number is (202) 395–3412.

SUPPLEMENTARY INFORMATION: Interested parties are invited to submit comments on any aspect of the program's operation, including the performance of CBERA and CBTPA beneficiary countries, as the case may be, under the criteria described in sections 212(b),

212(c), and 213(b)(5)(B) of the CBERA, as amended, and provided below. Other issues to be examined in this report include: the CBI's effect on the volume and composition of trade and investment between the United States and the Caribbean Basin beneficiary countries; and its effect in advancing U.S. trade policy goals as set forth in the CBTPA. The following countries are both CBERA and CBTPA beneficiary countries: Barbados, Belize, Guyana, Haiti, Jamaica, Panama, Saint Lucia, and Trinidad and Tobago. Antigua and Barbuda, Aruba, The Bahamas, British Virgin Islands, Dominica, Grenada, Montserrat, Netherlands Antilles, Saint Kitts and Nevis, Saint Vincent and the Grenadines currently receive benefits only under CBERA. The Dominican Republic, El Salvador, Guatemala, Honduras, Nicaragua, and Costa Rica ceased to be designated as beneficiary countries when the Dominican Republic—Central America—United States Free Trade Agreement (CAFTA–DR) entered into force for each country. The CAFTA–DR entered into force for El Salvador on March 1, 2006; for Honduras on April 1, 2006; for Nicaragua on April 1, 2006; for Guatemala on July 1, 2006; for the Dominican Republic on March 1, 2007; and for Costa Rica on January 1, 2009. Comments on Costa Rica should pertain to the time period when Costa Rica was still a beneficiary country.

Eligibility Criteria for CBTPA Beneficiary Countries (Section 213(b)(5)(B) of CBERA)

In determining whether to designate a country as a CBTPA beneficiary country, the President must take into account the criteria contained in sections 212(b) and (c) of CBERA, and other appropriate criteria, including the following:

(1) Whether the beneficiary country has demonstrated a commitment to undertake its obligations under the WTO on or ahead of schedule and participate in negotiations toward the completion of the FTAA or another free trade agreement.

(2) The extent to which the country provides protection of intellectual property rights consistent with or greater than the protection afforded under the Agreement on Trade-Related Aspects of Intellectual Property Rights.

(3) The extent to which the country provides internationally recognized worker rights including—

(I) The right of association;

(II) The right to organize and bargain collectively;

(III) A prohibition on the use of any form of forced or compulsory labor;

(IV) A minimum age for the employment of children; and

(V) Acceptable conditions of work with respect to minimum wages, hours of work, and occupational safety and health.

(4) Whether the country has implemented its commitments to eliminate the worst forms of child labor, as defined in section 507(6) of the Trade Act of 1974, as amended.

(5) The extent to which the country has met U.S. counter-narcotics certification criteria under the Foreign Assistance Act of 1961.

(6) The extent to which the country has taken steps to become a party to and implement the Inter-American Convention Against Corruption.

(7) The extent to which the country applies transparent, nondiscriminatory and competitive procedures in government procurement, and contributes to efforts in international fora to develop and implement rules on transparency in government procurement.

Additionally, before a country can receive benefits under the CBTPA, the President must also determine that the country has satisfied the requirements of section 213(b)(4)(A)(ii) of CBERA (19 U.S.C. 2703(b)(4)(A)(ii)) relating to the implementation of procedures and requirements similar in all material aspects to the relevant procedures and requirements contained in chapter 5 of the North American Free Trade Agreement.

Requirements for Submissions. Persons submitting comments must do so in English and must identify (on the first page of the submission) the ''CBI Report to Congress.'' Written comments must be received by September 30, 2009.

In order to ensure the most timely and expeditious receipt and consideration of comments, USTR has arranged to accept on-line submissions via *http://www.regulations.gov.* To submit comments via *http://www.regulations.gov,* enter docket number USTR–2009–0023 on the home page and click ''go.'' The site will provide a search-results page listing all documents associated with this docket. Find a reference to this notice by selecting ''Notice'' under ''Document Type'' on the left side of the search-results page, and click on the link entitled ''Send a Comment or Submission.'' (For further information on using the *http://www.regulations.gov* Web site, please consult the resources provided on the Web site by clicking on ''How to Use This Site'' on the left side of the home page.)

The *http://www.regulations.gov* Web site provides the option of making submissions by filling in a ''General Comments'' field, or by attaching a document. We expect that most submissions will be provided in an attached document. If a document is attached, it is sufficient to type ''See attached'' in the ''General Comments'' field.

Submissions in Microsoft Word (.doc) or Adobe Acrobat (.pdf) are preferred. If an application other than those two is used, please identify in your submission the specific application used. For any comments submitted electronically containing business confidential information, the file name of the business confidential version should begin with the characters ''BC'' and must be submitted separately from the public version. Any page containing business confidential information must be clearly marked ''BUSINESS CONFIDENTIAL'' on the top of that page. If you file comments containing business confidential information you must also submit a public version of the comments under a separate submission. The file name of the public version should begin with the character ''P''. The ''BC'' and ''P'' should be followed by the name of the person or entity submitting the comments. If you submit comments that contain no business confidential information, the file name should begin with the character ''P'', followed by the name of the person or entity submitting the comments. Electronic submissions should not attach separate cover letters; rather, information that might appear in a cover letter should be included in the comments you submit. Similarly, to the extent possible, please include any exhibits, annexes, or other attachments to a submission in the same file as the submission itself and not as separate files.

We strongly urge submitters to use electronic filing. If an on-line submission is impossible, alternative arrangements must be made with Ms. Blue prior to delivery for the receipt of such submissions. Ms. Blue may be contacted at (202) 395–3475. General information concerning the Office of the United States Trade Representative may be obtained by accessing its Internet Web site (*http://www.ustr.gov*).

Carmen Suro-Bredie,

Chairman, Trade Policy Staff Committee.

[FR Doc. E9–19650 Filed 8–14–09; 8:45 am]

BILLING CODE 3190–W9–P

DEPARTMENT OF TRANSPORTATION

Federal Aviation Administration

18th Meeting: RTCA Special Committee 206/EUROCAE WG 76 Plenary

AGENCY: Federal Aviation Administration (FAA), DOT.

ACTION: Notice of RTCA Special Committee 206 meeting; Aeronautical Information Services and Meteorology Data Link Services

SUMMARY: The FAA is issuing this notice to advise the public of a meeting of RTCA Special Committee 206: Aeronautical Information Services and Meteorology Data Link Services

DATES: The meeting will be held September 14–18, 2009 from 9 a.m. to 5 p.m.

ADDRESSES: The meeting will be held at World Meteorological Organization (WMO), 7bis, avenue de la Paix, Case postale No. 2300, CH–1211 Geneva 2, Switzerland

FOR FURTHER INFORMATION CONTACT: In Geneva: Herbert Puempel, tel.: +41.22.730.82.83, Chief, Aeronautical Meteorology Unit (C/AEM), email: *hpuempel@wmo.int,* Bridgette Vuitteney-Gelman, email: *BVuitteney-Gelman@wmo.int,* Andrew Mirza, tel.: +44(0)1392 884108, e-mail: *andrew.mirza@metoffice.gov.uk,* Met Office, FitzRoy Road, Exeter, EX1 3PB, United Kingdom

SUPPLEMENTARY INFORMATION: Pursuant to section 10(a) (2) of the Federal Advisory Committee Act (Pub. L. 92–463, 5 U.S.C., Appendix 2), notice is hereby given for a Special Committee 206/EUROCAE WG 76 Plenary meeting. The agenda will include:

14 September—Monday

9 a.m. Opening Plenary
- Chairmen's remarks and introductions
- Review and approve meeting agenda and approval of previous meeting minutes
- Discussion
- Schedule for this week
- Action Item Review
- Schedule for next meetings

10 a.m. Presentations
- To be determined

1 p.m. SPR

15 September—Tuesday

9 a.m. Joint AIS and MET Subgroup Meetings

16 September—Wednesday

9 a.m. Joint AIS and MET Subgroup Meetings

17 September—Thursday

9 a.m. Joint AIS and MET Subgroup Meetings

18 September—Friday

9 a.m. Joint AIS and MET Subgroup Meetings

10:30 a.m. Plenary Session
- Other Business
- Meeting Plans and Dates

Attendance is open to the interested public but limited to space availability. With the approval of the chairmen, members of the public may present oral statements at the meeting. Persons wishing to present statements or obtain information should contact the person listed in the **FOR FURTHER INFORMATION CONTACT** section. Members of the public may present a written statement to the committee at any time.

Issued in Washington, DC, on August 10, 2009.

Francisco Estrada C.,

RTCA Advisory Committee.

[FR Doc. E9–19659 Filed 8–14–09; 8:45 am]

BILLING CODE 4910–13–P

DEPARTMENT OF TRANSPORTATION

National Highway Traffic Safety Administration

Petition for Exemption From the Federal Motor Vehicle Motor Theft Prevention Standard; Toyota

AGENCY: National Highway Traffic Safety Administration, Department of Transportation (DOT).

ACTION: Grant of petition for exemption.

SUMMARY: This document grants in full the petition of Toyota Motor North America, Inc's., (Toyota) petition for an exemption of the Camry vehicle line in accordance with 49 CFR Part 543, *Exemption from the Theft Prevention Standard.* This petition is granted because the agency has determined that the antitheft device to be placed on the line as standard equipment is likely to be as effective in reducing and deterring motor vehicle theft as compliance with the parts-marking requirements of the Theft Prevention Standard (49 CFR Part 541).

DATES: The exemption granted by this notice is effective beginning with model year (MY) 2011.

FOR FURTHER INFORMATION CONTACT: Ms. Carlita Ballard, Office of International Policy, Fuel Economy and Consumer Standards, NHTSA, W43–439, 1200 New Jersey Avenue, SE., Washington, DC 20590. Ms. Ballard's phone number is (202) 366–0846. Her fax number is (202) 493–2990.

SUPPLEMENTARY INFORMATION: In a petition dated May 5, 2009, Toyota requested an exemption from the parts-marking requirements of the theft prevention standard (49 CFR Part 541) for the Camry vehicle line beginning with MY 2011. The petition has been filed pursuant to 49 CFR Part 543, *Exemption from Vehicle Theft Prevention Standard,* based on the installation of an antitheft device as standard equipment for the entire vehicle line.

Under § 543.5(a), a manufacturer may petition NHTSA to grant an exemption for one vehicle line per model year. In its petition, Toyota provided a detailed description and diagram of the identity, design, and location of the components of the antitheft device for the Camry vehicle line. Toyota stated that all Camry vehicles will be equipped with a passive engine immobilizer device as standard equipment beginning with the 2011 model year. Additionally, Toyota states that the device will feature two operational systems, a ''smart key system'' (keyless entry) and a ''conventional key'' system. Toyota stated that both systems will have the same basic antitheft functionality and immobilization features but the driver will use either the transponder to open the door and start the engine or a conventional key to open the door and start the engine. Toyota additionally stated that the ''conventional key'' system will be standard on lower trim models and the ''smart key'' system will be standard on higher trim models but the main feature of the antitheft system is the immobilizer device. The ''smart key'' system is a fob-sized transponder that allows for ''keyless'' entry and push-button start. Key components of the ''smart key'' system will include an engine immobilizer, certification electronic control unit (ECU), engine switch, id code box, steering lock ECU, security indicator, door control receiver, electrical key and electronic control module (ECM). The key components of the ''conventional key'' system include an engine immobilizer, transponder key ECU assembly, transponder key amplifier, security indicator, ignition key and ECM. The device's security indicators provide the status of the immobilizer to users and others inside/outside the vehicle. When the immobilizer is activated, the indicator flashes continuously. When the immobilizer is not activated, the indicator is turned off. Models with the ''smart'' key system will also be installed with an additional visual and audible alarm feature designed to deter inappropriate access to the vehicle.

Toyota stated that with the ''smart key'' system, the immobilizer is activated when the power button is pushed from the ''ON'' status to another ignition status and the signal is verified by the ECU or with the ''conventional key'' system, the key is turned from the ''ON'' position and/or removed from the vehicle's ignition. The device is deactivated when the doors are unlocked and the system recognizes the transponder from the ''smart key'' system, or the ''conventional key'' is inserted into the key cylinder and turned toward the ''ON'' position. In either system, the key code has to be recognized by the ECM in order for the vehicle to start. Toyota also stated that position switches in the vehicle are also installed to protect the hood and doors of the vehicle. The position switches in the hood will trigger the antitheft device when they sense inappropriate opening of the hood. The position switches in the doors will trigger the antitheft device when they sense opening of the doors are being attempted without the use of a key, wirless switch or ''smart entry'' system. Toyota's submission is considered a complete petition as required by 49 CFR 543.7 in that it meets the general requirements contained in 543.5 and the specific content requirements of 543.6.

In addressing the specific content requirements of 543.6, Toyota provided information on the reliability and durability of its proposed device. To ensure reliability and durability of the device, Toyota conducted tests based on its own specified standards. Toyota provided a detailed list of the tests conducted (*i.e.,* high and low temperature, strength, impact, vibration, electro-magnetic interference, *etc.*). Toyota stated that it believes that its device is reliable and durable because it complied with its own specific design standards and it is installed in other vehicle lines for which the agency has granted a parts-marking exemption. Additionally, Toyota stated that there are approximately 20,000 combinations for the key cylinders and key plates for its outer gutter keys and approximately 10,000 for its inner gutter keys, making it very difficult to unlock the doors without valid keys.

Toyota also compared the device proposed for its vehicle line with other devices which NHTSA has determined to be as effective in reducing and deterring motor vehicle theft as would compliance with the parts-marking requirements. Toyota referenced NHTSA published theft rate data for several years before and after the Altima vehicle line was equipped with a standard immobilizer. Toyota stated that the average theft rate for the Altima dropped to 3.0 per 1,000 cars produced between MYs 2000–2006 (with a standard immobilizer) from 5.3 per 1,000 cars produced between MYs 1996–1999 (without a standard immobilizer). Toyota stated that this represents approximately a 43% decrease in the theft rate (with installation of a standard immobilizer) when compared to the average for the Altima when it was parts marked. Toyota believes that installing the immobilizer as standard equipment reduces the theft rate and expects the Camry will experience comparable effectiveness to that of the Altima and therefore would be more effective than parts-marking labels.

Based on the evidence submitted by Toyota, the agency believes that the antitheft device for the Camry vehicle line is likely to be as effective in reducing and deterring motor vehicle theft as compliance with the parts-marking requirements of the Theft Prevention Standard (49 CFR 541).

Pursuant to 49 U.S.C. 33106 and 49 CFR 543.7(b), the agency grants a petition for exemption from the parts-marking requirements of Part 541, either in whole or in part, if it determines that, based upon substantial evidence, the standard equipment antitheft device is likely to be as effective in reducing and deterring motor vehicle theft as compliance with the parts-marking requirements of Part 541. The agency finds that Toyota has provided adequate reasons for its belief that the antitheft device for the Toyota Camry vehicle line is likely to be as effective in reducing and deterring motor vehicle theft as compliance with the parts-marking requirements of the Theft Prevention Standard (49 CFR Part 541). This conclusion is based on the information Toyota provided about its device.

The agency concludes that the device will provide four or five of the types of performance listed in § 543.6(a)(3): Promoting activation; attract attention to the efforts of an unauthorized person to enter or move a vehicle by means other than a key; preventing defeat or circumvention of the device by unauthorized persons; preventing operation of the vehicle by unauthorized entrants; and ensuring the reliability and durability of the device.

For the foregoing reasons, the agency hereby grants in full Toyota's petition for exemption for the Toyota Camry vehicle line from the parts-marking requirements of 49 CFR Part 541. The agency notes that 49 CFR Part 541, Appendix A–1, identifies those lines that are exempted from the Theft Prevention Standard for a given model year. 49 CFR 543.7(f) contains publication requirements incident to the disposition of all Part 543 petitions. Advanced listing, including the release of future product nameplates, the beginning model year for which the petition is granted and a general description of the antitheft device is necessary in order to notify law enforcement agencies of new vehicle lines exempted from the parts marking requirements of the Theft Prevention Standard.

If Toyota decides not to use the exemption for this line, it should formally notify the agency. If such a decision is made, the line must be fully marked according to the requirements under 49 CFR 541.5 and 541.6 (marking of major component parts and replacement parts).

NHTSA notes that if Toyota wishes in the future to modify the device on which this exemption is based, the company may have to submit a petition to modify the exemption. Section 543.7(d) states that a Part 543 exemption applies only to vehicles that belong to a line exempted under this part and equipped with the antitheft device on which the line's exemption is based. Further, § 543.9(c)(2) provides for the submission of petitions ''to modify an exemption to permit the use of an antitheft device similar to but differing from the one specified in that exemption.''

The agency wishes to minimize the administrative burden that § 543.9(c)(2) could place on exempted vehicle manufacturers and itself. The agency did not intend in drafting Part 543 to require the submission of a modification petition for every change to the components or design of an antitheft device. The significance of many such changes could be *de minimis.* Therefore, NHTSA suggests that if the manufacturer contemplates making any changes, the effects of which might be characterized as *de minimis,* it should consult the agency before preparing and submitting a petition to modify.

Authority: 49 U.S.C. 33106; delegation of authority at 49 CFR 1.50.

Issued on: August 11, 2009.

Julie Abraham,

Director, Office of International Policy, Fuel Economy and Consumer Programs.

[FR Doc. E9–19585 Filed 8–14–09; 8:45 am]

BILLING CODE 4910–59–P

DEPARTMENT OF TRANSPORTATION

Federal Motor Carrier Safety Administration

[Docket ID FMCSA–2009–0207]

Qualification of Drivers; Exemption Applications; Diabetes

AGENCY: Federal Motor Carrier Safety Administration (FMCSA).

ACTION: Notice of applications for exemptions from the diabetes standard; request for comments.

SUMMARY: FMCSA announces receipt of applications from 24 individuals for exemptions from the prohibition against persons with insulin-treated diabetes mellitus (ITDM) operating commercial motor vehicles (CMVs) in interstate commerce. If granted, the exemptions would enable these individuals with ITDM to operate commercial motor vehicles in interstate commerce.

DATES: Comments must be received on or before September 16, 2009.

ADDRESSES: You may submit comments bearing the Federal Docket Management System (FDMS) Docket ID FMCSA–2009–0207 using any of the following methods:

- *Federal eRulemaking Portal:* Go to *http://www.regulations.gov.* Follow the on-line instructions for submitting comments.
- *Mail:* Docket Management Facility; U.S. Department of Transportation, 1200 New Jersey Avenue, SE., West Building Ground Floor, Room W12–140, Washington, DC 20590–0001.
- *Hand Delivery:* West Building Ground Floor, Room W12–140, 1200 New Jersey Avenue, SE., Washington, DC, between 9 a.m. and 5 p.m., Monday through Friday, except Federal holidays.
- *Fax:* 1–202–493–2251.

Each submission must include the Agency name and the docket ID for this Notice. Note that DOT posts all comments received without change to *http://www.regulations.gov,* including any personal information included in a comment. Please see the Privacy Act heading below.

Docket: For access to the docket to read background documents or comments, go to *http://www.regulations.gov* at any time or Room W12–140 on the ground level of the West Building, 1200 New Jersey Avenue, SE., Washington, DC, between 9 a.m. and 5 p.m., Monday through Friday, except Federal holidays. The FDMS is available 24 hours each day, 365 days each year. If you want acknowledgment that we received your comments, please include a self-addressed, stamped envelope or postcard or print the acknowledgement page that appears after submitting comments on-line.

Privacy Act: Anyone may search the electronic form of all comments received into any of our dockets by the name of the individual submitting the comment (or of the person signing the comment, if submitted on behalf of an association, business, labor union, etc.). You may review the DOT's complete Privacy Act Statement in the **Federal Register** published on April 11, 2000 (65 FR 19476). This information is also available at *http://Docketinfo.dot.gov.*

FOR FURTHER INFORMATION CONTACT: Dr. Mary D. Gunnels, Director, Medical Programs, (202) 366–4001, *fmcsamedical@dot.gov,* FMCSA, Department of Transportation, 1200 New Jersey Avenue, SE., Room W64–224, Washington, DC 20590–0001. Office hours are from 8:30 a.m. to 5 p.m., Monday through Friday, except Federal holidays.

SUPPLEMENTARY INFORMATION:

Background

Under 49 U.S.C. 31136(e) and 31315, FMCSA may grant an exemption for a 2-year period if it finds ''such exemption would likely achieve a level of safety that is equivalent to, or greater than, the level that would be achieved absent such exemption.'' The statutes also allow the Agency to renew exemptions at the end of the 2-year period. The 24 individuals listed in this notice have recently requested an exemption from the diabetes prohibition in 49 CFR 391.41(b)(3), which applies to drivers of CMVs in interstate commerce. Accordingly, the Agency will evaluate the qualifications of each applicant to determine whether granting the exemption will achieve the required level of safety mandated by the statutes.

Qualifications of Applicants

Tawnya E. Benner

Ms. Benner, age 38, has had ITDM since 1982. Her endocrinologist examined her in 2009, and certified that she has had no hypoglycemic reactions resulting in loss of consciousness, requiring the assistance of another person, or resulting in impaired cognitive function that occurred without warning in the past 5 years; understands diabetes management and monitoring; and has stable control of her diabetes using insulin, and is able to drive a CMV safely. Ms. Benner meets the requirements of the vision standard at 49 CFR 391.41(b)(10). Her optometrist examined him in 2009 and certified that she does not have diabetic retinopathy. She holds a Class C operator's license from Pennsylvania.

Lowell R. Brown

Mr. Brown, 71, has had ITDM since 2006. His endocrinologist examined him in 2009, and certified that he has had no hypoglycemic reactions resulting in loss of consciousness, requiring the assistance of another person, or resulting in impaired cognitive function that occurred without warning in the past 5 years; understands diabetes management and monitoring; and has stable control of his diabetes using insulin, and is able to drive a CMV safely. Mr. Brown meets the requirements of the vision standard at 49 CFR 391.41(b)(10). His ophthalmologist examined him in 2009, and certified that he does not have diabetic retinopathy. He holds a Class B Commercial Driver's License (CDL) from Indiana.

Gerald R. Claypool

Mr. Claypool, 59, has had ITDM since 2009. His endocrinologist examined him in 2009, and certified that he has had no hypoglycemic reactions resulting in loss of consciousness, requiring the assistance of another person, or resulting in impaired cognitive function that occurred without warning in the past 5 years; understands diabetes management and monitoring; and has stable control of his diabetes using insulin, and is able to drive a CMV safely. Mr. Claypool meets the requirements of the vision standard at 49 CFR 391.41(b)(10). His optometrist examined him in 2009, and certified that he does not have diabetic retinopathy. He holds a Class B CDL from California.

Robert J. Dupuis

Mr. Dupuis, 57, has had ITDM since 2009. His endocrinologist examined him in 2009, and certified that he has had no hypoglycemic reactions resulting in loss of consciousness, requiring the assistance of another person, or resulting in impaired cognitive function that occurred without warning in the past 5 years; understands diabetes management and monitoring; and has stable control of his diabetes using insulin, and is able to drive a CMV safely. Mr. Dupuis meets the requirements of the vision standard at 49 CFR 391.41(b)(10). His optometrist examined him in 2009, and certified that he does not have diabetic retinopathy. He holds a Class A CDL from Massachusetts.

Glenn R. Edwards

Mr. Edwards, 42, has had ITDM since 2006. His endocrinologist examined him in 2009, and certified that he has had no hypoglycemic reactions resulting in loss of consciousness, requiring the assistance of another person, or resulting in impaired cognitive function that occurred without warning in the past 5 years; understands diabetes management and monitoring; and has stable control of his diabetes using insulin, and is able to drive a CMV safely. Mr. Edwards meets the requirements of the vision standard at 49 CFR 391.41(b)(10). His ophthalmologist examined him in 2009, and certified that he does not have diabetic retinopathy. He holds a Class A CDL from New Jersey.

John H. Forchette, Jr.

Mr. Forchette, 55, has had ITDM since 2008. His endocrinologist examined him in 2009, and certified that he has had no hypoglycemic reactions resulting in loss of consciousness, requiring the assistance of another person, or resulting in impaired cognitive function that occurred without warning in the past 5 years; understands diabetes management and monitoring; and has stable control of his diabetes using insulin, and is able to drive a CMV safely. Mr. Forchette meets the requirements of the vision standard at 49 CFR 391.41(b)(10). His ophthalmologist examined him in 2009, and certified that he does not have diabetic retinopathy. He holds a Class A CDL from Wisconsin.

Robert A. Gibson

Mr. Gibson, 44, has had ITDM since 2006. His endocrinologist examined him in 2009, and certified that he has had no hypoglycemic reactions resulting in loss of consciousness, requiring the assistance of another person, or resulting in impaired cognitive function that occurred without warning in the past 5 years; understands diabetes management and monitoring; and has stable control of his diabetes using insulin, and is able to drive a CMV safely. Mr. Gibson meets the requirements of the vision standard at 49 CFR 391.41(b)(10). His optometrist examined him in 2009, and certified that he does not have diabetic retinopathy. He holds a Class B CDL from Missouri.

Blaine H. Holmes

Mr. Holmes, 52, has had ITDM since 2008. His endocrinologist examined him in 2009, and certified that he has had no hypoglycemic reactions resulting in loss of consciousness, requiring the assistance of another person, or resulting in impaired cognitive function that occurred without warning in the past 5 years; understands diabetes management and monitoring; and has stable control of his diabetes using insulin, and is able to drive a CMV safely. Mr. Holmes meets the requirements of the vision standard at 49 CFR 391.41(b)(10). His ophthalmologist examined him in 2009, and certified that he does not have diabetic retinopathy. He holds a Class A CDL from Utah.

Gerald E. Huelle

Mr. Huelle, 61, has had ITDM since 1998. His endocrinologist examined him in 2009, and certified that he has had no hypoglycemic reactions resulting in loss of consciousness, requiring the assistance of another person, or resulting in impaired cognitive function that occurred without warning in the past 5 years; understands diabetes management and monitoring; and has stable control of his diabetes using insulin, and is able to drive a CMV safely. Mr. Huelle meets the requirements of the vision standard at 49 CFR 391.41(b)(10). His optometrist examined him in 2009, and certified that he does not have diabetic retinopathy. He holds a Class A CDL from Wyoming.

Edward L. Johnson

Mr. Johnson, 60, has had ITDM since 2002. His endocrinologist examined him in 2009, and certified that he has had no hypoglycemic reactions resulting in loss of consciousness, requiring the assistance of another person, or resulting in impaired cognitive function that occurred without warning in the past 5 years; understands diabetes management and monitoring; and has stable control of his diabetes using insulin, and is able to drive a CMV safely. Mr. Johnson meets the requirements of the vision standard at 49 CFR 391.41(b)(10). His ophthalmologist examined him in 2009, and certified that he has stable nonproliferative diabetic retinopathy. He holds a Class A CDL from Montana.

Mary V. Johnson

Ms. Johnson, 59, has had ITDM since 2002. Her endocrinologist examined him in 2009, and certified that she has had no hypoglycemic reactions resulting in loss of consciousness, requiring the assistance of another person, or resulting in impaired cognitive function that occurred without warning in the past 5 years; understands diabetes management and monitoring; and has stable control of her diabetes using insulin, and is able to drive a CMV safely. Ms. Johnson meets the requirements of the vision standard at 49 CFR 391.41(b)(10). Her ophthalmologist examined her in 2009, and certified that she does not have diabetic retinopathy. She holds a Class B CDL from Arizona.

Roger L. Kaufman

Mr. Kaufman, 44, has had ITDM since 2009. His endocrinologist examined him in 2009 and certified that he has had no hypoglycemic reactions resulting in loss of consciousness, requiring the assistance of another person, or resulting in impaired cognitive function that occurred without warning in the past 5 years; understands diabetes management and monitoring; and has stable control of his diabetes using insulin, and is able to drive a CMV safely. Mr. Kaufman meets the requirements of the vision standard at 49 CFR 391.41(b)(10). His optometrist examined him in 2009 and certified that he does not have diabetic retinopathy. He holds a Class A CDL from Kentucky.

Kenneth A. Leeker

Mr. Leeker, 61, has had ITDM since 2008. His endocrinologist examined him in 2009, and certified that he has had no hypoglycemic reactions resulting in loss of consciousness, requiring the assistance of another person, or resulting in impaired cognitive function that occurred without warning in the past 5 years; understands diabetes management and monitoring; and has stable control of his diabetes using insulin, and is able to drive a CMV safely. Mr. Leeker meets the requirements of the vision standard at 49 CFR 391.41(b)(10). His ophthalmologist examined him in 2009, and certified that he does not have diabetic retinopathy. He holds a Class A CDL from Missouri.

Paul L. Meier

Mr. Meier, 33, has had ITDM since 2008. His endocrinologist examined him in 2009, and certified that he has had no hypoglycemic reactions resulting in loss of consciousness, requiring the assistance of another person, or resulting in impaired cognitive function that occurred without warning in the past 5 years; understands diabetes management and monitoring; and has stable control of his diabetes using insulin, and is able to drive a CMV safely. Mr. Meier meets the requirements of the vision standard at 49 CFR 391.41(b)(10). His optometrist examined him in 2009, and certified that he does not have diabetic

retinopathy. He holds a Class B CDL from Illinois.

Clifford L. Rayl

Mr. Rayl, 58, has had ITDM since 2004. His endocrinologist examined him in 2009, and certified that he has had no hypoglycemic reactions resulting in loss of consciousness, requiring the assistance of another person, or resulting in impaired cognitive function that occurred without warning in the past 5 years; understands diabetes management and monitoring; and has stable control of his diabetes using insulin, and is able to drive a CMV safely. Mr. Rayl meets the requirements of the vision standard at 49 CFR 391.41(b)(10). His optometrist examined him in 2008, and certified that he does not have diabetic retinopathy. He holds a Class an operator's license from Indiana.

Robert J. Schafer

Mr. Schafer, 57, has had ITDM since 2009. His endocrinologist examined him in 2009, and certified that he has had no hypoglycemic reactions resulting in loss of consciousness, requiring the assistance of another person, or resulting in impaired cognitive function that occurred without warning in the past 5 years; understands diabetes management and monitoring; and has stable control of his diabetes using insulin, and is able to drive a CMV safely. Mr. Schafer meets the requirements of the vision standard at 49 CFR 391.41(b)(10). His optometrist examined him in 2009, and certified that he does not have diabetic retinopathy. He holds a Class A CDL from Pennsylvania.

Steven J. Shaw

Mr. Shaw, 26, has had ITDM since 2005. His endocrinologist examined him in 2009, and certified that he has had no hypoglycemic reactions resulting in loss of consciousness, requiring the assistance of another person, or resulting in impaired cognitive function that occurred without warning in the past 5 years; understands diabetes management and monitoring; and has stable control of his diabetes using insulin, and is able to drive a CMV safely. Mr. Shaw meets the requirements of the vision standard at 49 CFR 391.41(b)(10). His optometrist examined him in 2009, and certified that he does not have diabetic retinopathy. He holds a Class A CDL from Idaho.

Scott L. Stamstad

Mr. Stamstad, 39, has had ITDM since 2008. His endocrinologist examined him in 2009, and certified that he has had no hypoglycemic reactions resulting in loss of consciousness, requiring the assistance of another person, or resulting in impaired cognitive function that occurred without warning in the past 5 years; understands diabetes management and monitoring; and has stable control of his diabetes using insulin, and is able to drive a CMV safely. Mr. Stamstad meets the requirements of the vision standard at 49 CFR 391.41(b)(10). His ophthalmologist examined him in 2009, and certified that he does not have diabetic retinopathy. He holds a Class D operator's license from Wisconsin.

Kendell R. Strassman

Mr. Strassman, 31, has had ITDM since 2008. His endocrinologist examined him in 2009, and certified that he has had no hypoglycemic reactions resulting in loss of consciousness, requiring the assistance of another person, or resulting in impaired cognitive function that occurred without warning in the past 5 years; understands diabetes management and monitoring; and has stable control of his diabetes using insulin, and is able to drive a CMV safely. Mr. Strassman meets the requirements of the vision standard at 49 CFR 391.41(b)(10). His ophthalmologist examined him in 2009, and certified that he does not have diabetic retinopathy. He holds a Class A CDL from Wisconsin.

Allan A. Vanderhamm

Mr. Vanderhamm, 65, has had ITDM since 2008. His endocrinologist examined him in 2009, and certified that he has had no hypoglycemic reactions resulting in loss of consciousness, requiring the assistance of another person, or resulting in impaired cognitive function that occurred without warning in the past 5 years; understands diabetes management and monitoring; and has stable control of his diabetes using insulin, and is able to drive a CMV safely. Mr. Vanderhamm meets the requirements of the vision standard at 49 CFR 391.41(b)(10). His optometrist examined him in 2009, and certified that he does not have diabetic retinopathy. He holds a Class A CDL from Florida.

Maurice L. Wedel

Mr. Wedel, 38, has had ITDM since 2005. His endocrinologist examined him in 2009, and certified that he has had no hypoglycemic reactions resulting in loss of consciousness, requiring the assistance of another person, or resulting in impaired cognitive function that occurred without warning in the past 5 years; understands diabetes management and monitoring; and has stable control of his diabetes using insulin, and is able to drive a CMV safely. Mr. Wedel meets the requirements of the vision standard at 49 CFR 391.41(b)(10). His optometrist examined him in 2009, and certified that he does not have diabetic retinopathy. He holds a Class A CDL from Kansas.

Michael R. Wellman

Mr. Wellman, 66, has had ITDM since 2007. His endocrinologist examined him in 2009, and certified that he has had no hypoglycemic reactions resulting in loss of consciousness, requiring the assistance of another person, or resulting in impaired cognitive function that occurred without warning in the past 5 years; understands diabetes management and monitoring; and has stable control of his diabetes using insulin, and is able to drive a CMV safely. Mr. Wellman meets the requirements of the vision standard at 49 CFR 391.41(b)(10). His ophthalmologist examined him in 2009, and certified that he does not have diabetic retinopathy. He holds a Class A CDL from Indiana.

Thomas C. Wilson

Mr. Wilson, 57, has had ITDM since 2004. His endocrinologist examined him in 2009, and certified that he has had no hypoglycemic reactions resulting in loss of consciousness, requiring the assistance of another person, or resulting in impaired cognitive function that occurred without warning in the past 5 years; understands diabetes management and monitoring; and has stable control of his diabetes using insulin, and is able to drive a CMV safely. Mr. Wilson meets the requirements of the vision standard at 49 CFR 391.41(b)(10). His optometrist examined him in 2008, and certified that he does not have diabetic retinopathy. He holds a Class B CDL from Indiana.

Wayne W. Zander

Mr. Zander, 55, has had ITDM since 2009. His endocrinologist examined him in 2009, and certified that he has had no hypoglycemic reactions resulting in loss of consciousness, requiring the assistance of another person, or resulting in impaired cognitive function that occurred without warning in the past 5 years; understands diabetes management and monitoring; and has stable control of his diabetes using insulin, and is able to drive a CMV safely. Mr. Zander meets the

requirements of the vision standard at 49 CFR 391.41(b)(10). His optometrist examined him in 2009, and certified that he does not have diabetic retinopathy. He holds a Class A CDL from South Dakota.

Request for Comments

In accordance with 49 U.S.C. 31136(e) and 31315, FMCSA requests public comment from all interested persons on the exemption petitions described in this notice. We will consider all comments received before the close of business on the closing date indicated in the date section of the Notice.

FMCSA notes that Section 4129 of the Safe, Accountable, Flexible and Efficient Transportation Equity Act: A Legacy for Users (SAFETEA–LU) requires the Secretary to revise its diabetes exemption program established on September 3, 2003 (68 FR 52441).[1] The revision must provide for individual assessment of drivers with diabetes mellitus, and be consistent with the criteria described in section 4018 of the Transportation Equity Act for the 21st Century (49 U.S.C. 31305).

Section 4129 requires: (1) The elimination of the requirement for three years of experience operating CMVs while being treated with insulin; and (2) the establishment of a specified minimum period of insulin use to demonstrate stable control of diabetes before being allowed to operate a CMV.

In response to section 4129, FMCSA made immediate revisions to the diabetes exemption program established by the September 3, 2003 Notice. FMCSA discontinued use of the 3-year driving experience and fulfilled the requirements of section 4129 while continuing to ensure that operation of CMVs by drivers with ITDM will achieve the requisite level of safety required of all exemptions granted under 49 USC. 31136 (e).

Section 4129(d) also directed FMCSA to ensure that drivers of CMVs with ITDM are not held to a higher standard than other drivers, with the exception of limited operating, monitoring and medical requirements that are deemed medically necessary. FMCSA concluded that all of the operating, monitoring and medical requirements set out in the September 3, 2003 Notice, except as modified, were in compliance with section 4129(d). Therefore, all of the requirements set out in the September 3, 2003 Notice, except as modified by the Notice in the **Federal Register** on November 8, 2005 (70 FR 67777), remain in effect.

Issued on: August 10, 2009.

Larry W. Minor,

Associate Administrator for Policy and Program Development.

[FR Doc. E9–19582 Filed 8–14–09; 8:45 am]

BILLING CODE P

[1] Section 4129(a) refers to the 2003 Notice as a ''final rule.'' However, the 2003 Notice did not issue a ''final rule'' but did establish the procedures and standards for issuing exemptions for drivers with ITDM.

DEPARTMENT OF THE TREASURY

Office of Thrift Supervision

Proposed Agency Information Collection Activities; Comment Request—Loan Application Register (HMDA)

AGENCY: Office of Thrift Supervision (OTS), Treasury.

ACTION: Notice and request for comment.

SUMMARY: The Department of the Treasury, as part of its continuing effort to reduce paperwork and respondent burden, invites the general public and other Federal agencies to comment on proposed and continuing information collections, as required by the Paperwork Reduction Act of 1995, 44 U.S.C. 3507. The Office of Thrift Supervision within the Department of the Treasury will submit the proposed information collection requirement described below to the Office of Management and Budget (OMB) for review, as required by the Paperwork Reduction Act. Today, OTS is soliciting public comments on its proposal to extend this information collection.

DATES: Submit written comments on or before October 16, 2009.

ADDRESSES: Send comments, referring to the collection by title of the proposal or by OMB approval number, to Information Collection Comments, Chief Counsel's Office, Office of Thrift Supervision, 1700 G Street, NW., Washington, DC 20552; send a facsimile transmission to (202) 906–6518; or send an e-mail to *infocollection.comments@ots.treas.gov*. OTS will post comments and the related index on the OTS Internet Site at *http://www.ots.treas.gov*. In addition, interested persons may inspect comments at the Public Reading Room, 1700 G Street, NW., by appointment. To make an appointment, call (202) 906–5922, send an e-mail to *public.info@ots.treas.gov*, or send a facsimile transmission to (202) 906–7755.

FOR FURTHER INFORMATION CONTACT: You can request additional information about this proposed information collection from Stacy E. Messett, Senior Project Manger (202) 906–6241, Office of Thrift Supervision, 1700 G Street, NW., Washington, DC 20552.

SUPPLEMENTARY INFORMATION:

OTS may not conduct or sponsor an information collection, and respondents are not required to respond to an information collection, unless the information collection displays a currently valid OMB control number. As part of the approval process, we invite comments on the following information collection.

Comments should address one or more of the following points:

a. Whether the proposed collection of information is necessary for the proper performance of the functions of OTS;

b. The accuracy of OTS's estimate of the burden of the proposed information collection;

c. Ways to enhance the quality, utility, and clarity of the information to be collected;

d. Ways to minimize the burden of the information collection on respondents, including through the use of information technology.

We will summarize the comments that we receive and include them in the OTS request for OMB approval. All comments will become a matter of public record. In this notice, OTS is soliciting comments concerning the following information collection.

Title of Proposal: Loan Application Register (HMDA).

OMB Number: 1550–0021.

Form Numbers: N/A.

Regulation requirement: 12 CFR Part 203.

Description: The Home Mortgage Disclosure Act (HMDA), 12 U.S.C. 2801, requires this collection of information. In accordance with the HMDA, the Board of Governors of the Federal Reserve System (FRB) promulgates and administers HMDA regulations, which are prescribed as part of the FRB's Regulation C (12 CFR Part 203), implementing the HMDA (12 U.S.C. 2801–2810). HMDA forms as well as collection and recordkeeping requirements are approved under OMB Control No. 7100–0247. The FRB supporting statement forms the decisional basis for the OMB action. This submission discusses the burden imposed by Regulation C on the institutions OTS regulates.

The data on loan applications collected under HMDA assist OTS in analyzing lending patterns for possible discrimination. OTS examiners use the data to scope for compliance with the fair lending laws (Equal Credit Opportunity Act, Fair Housing Act, and OTS's Non-discrimination regulation),

as well as for compliance with HMDA itself. Examiners also use HMDA data to determine whether associations are helping to meet the credit needs of their communities as required by the Community Reinvestment Act.

Type of Review: Extension of a currently approved collection.

Affected Public: Businesses or other for-profit.

Estimated Number of Respondents: 588.

Estimated Number of Responses: 0.03 hours per application (approximately 8,361 applications per LAR).

Estimated Frequency of Response: Annually.

Estimated Total Burden: 147,488 hours.

Dated: August 12, 2009.

Ira L. Mills,

Paperwork Clearance Officer, Office of Thrift Supervision.

[FR Doc. E9–19684 Filed 8–14–09; 8:45 am]

BILLING CODE 6720–01–P

DEPARTMENT OF VETERANS AFFAIRS

Privacy Act of 1974; System of Records

AGENCY: Department of Veterans Affairs (VA).

ACTION: Notice of amendment to system of records.

SUMMARY: As required by the Privacy Act of 1974, 5 U.S.C. 552a(e), notice is hereby given that the Department of Veterans Affairs (VA) is amending the system of records currently entitled ''Compliance Records, Response, and Resolution of Reports of Persons Allegedly Involved in Compliance Violations—VA'' (106VA17) as set forth in the **Federal Register** 66 FR 59842 and last amended Nov. 30, 2001. VA is amending the system of records by revising the Routine Uses of Records Maintained in the System Including Categories of Users and the Purpose of Such Uses. VA is republishing the system notice in its entirety.

DATES: Comments on the amendment of this system of records must be received no later than September 16, 2009. If no public comment is received, the amended system will become effective September 16, 2009.

ADDRESSES: Written comments may be submitted through *http://www.Regulations.gov;* by mail or hand-delivery to Director, Regulations Management (02Reg), Department of Veterans Affairs, 810 Vermont Avenue, NW., Room 1068, Washington, DC 20420; or by fax to (202) 273–9026. Comments received will be available for public inspection in the Office of Regulation Policy and Management, Room 1063B, between the hours of 8 a.m. and 4:30 p.m., Monday through Friday (except holidays). Please call (202) 461–4902 (this is not a toll-free number) for an appointment. In addition, during the comment period, comments may be viewed online through the Federal Docket Management System (FDMS) at *http://www.Regulations.gov.*

FOR FURTHER INFORMATION CONTACT: Veterans Health Administration (VHA) Privacy Officer, Department of Veterans Affairs, 810 Vermont Avenue, NW., Washington, DC 20420; telephone (704) 245–2492.

SUPPLEMENTARY INFORMATION: Routine use 13 was amended to read: Disclosure may be made to the National Archives and Records Administration (NARA) and the General Services Administration (GSA) in records management inspections conducted under authority of Title 44, Chapter 29, of the United States Code.

Routine use 14 was added to disclose information to the Department of Justice (DoJ), either on VA's initiative or in response to DoJ's request for the information, after either VA or DoJ determines that such information is relevant to DoJ's representation of the United States or any of its components in legal proceedings before a court or adjudicative body, provided that, in each case, the agency also determines prior to disclosure that release of the records to the DoJ is a use of the information contained in the records that is compatible with the purpose for which VA collected the records. VA, on its own initiative, may disclose records in this system of records in legal proceedings before a court or administrative body after determining that the disclosure of the records to the court or administrative body is a use of the information contained in the records that is compatible with the purpose for which VA collected the records.

Routine use 15 was added to disclose information to other Federal agencies that may be made to assist such agencies in preventing and detecting possible fraud or abuse by individuals in their operations and programs.

Routine use 16 was added so that the VA may, on its own initiative, disclose any information or records to appropriate agencies, entities, and persons when (1) VA suspects or has confirmed that the integrity or confidentiality of information in the system of records has been compromised; (2) the Department has determined that as a result of the suspected or confirmed compromise, there is a risk of embarrassment or harm to the reputations of the record subjects, harm to economic or property interests, identity theft or fraud, or harm to the security, confidentiality, or integrity of this system or other systems or programs (whether maintained by the Department or another agency or entity) that rely upon the potentially compromised information; and (3) the disclosure is to agencies, entities, or persons whom VA determines are reasonably necessary to assist or carry out the Department's efforts to respond to the suspected or confirmed compromise and prevent, minimize, or remedy such harm. This routine use permits disclosures by the Department to respond to a suspected or confirmed data breach, including the conduct of any risk analysis or provision of credit protection services as provided in 38 U.S.C. 5724, as the terms are defined in 38 U.S.C. 5727.

The Report of Intent to Amend a System of Records Notice and an advance copy of the system notice have been sent to the appropriate Congressional committees and to the Director of the Office of Management and Budget (OMB) as required by 5 U.S.C. 552a(r) (Privacy Act) and guidelines issued by OMB (65 FR 77677), December 12, 2000.

Approved: July 30, 2009.

John R. Gingrich,

Chief of Staff, Department of Veterans Affairs.

110VA17

SYSTEM NAME:

Compliance Record, Response, and Resolution of Reports of Persons Allegedly Involved in Compliance Violations—VA

SYSTEM LOCATION:

All computerized and paper records are located at: Department of Veterans Affairs (VA) Central Office, 810 Vermont Avenue, NW., Washington, DC 20420; Veterans Integrated Service Networks (VISNs); and, VA health care facilities. Address locations for VA facilities are listed in VA Appendix 1 of the biennial publication of the Privacy Act Issuances.

CATEGORIES OF INDIVIDUALS COVERED BY THE SYSTEM:

The following categories of individuals will be covered by the system: (1) Employees, (2) Veterans, (3) third parties such as contractors who conduct official business with the Veterans Health Administration (VHA),

(4) family members or representatives of Veterans, and (5) subjects of complaints and complainants. Complainants are individuals who have reported a possible violation of law, rules, policies, regulations, or external program requirements, such as third-party payer billing guidelines.

CATEGORIES OF RECORDS IN THE SYSTEM:

Records (or information contained in records) in this system include allegations made by individuals calling the VHA Office of Compliance and Business Integrity Help Line, or through another source, to report a possible violation of law, rules, policies, procedures, regulations, or external program requirements such as third-party payer billing guidelines. Records also may contain reports of the reviews or investigations conducted at the medical center, VISN, or Central Office level to verify the reported allegations and take remedial action as needed. VHA Office of Compliance Office and Business Integrity will maintain a copy of these reports. Information in this system regarding reports of suspected non-compliance may include: (1) The name, home and work address and phone number of the complainant; (2) the name of the subject of the complaint; (3) the name or patient number of Veteran patient who received services associated with the complaint; (4) the date when the allegation was reported; (5) the date, location and nature of the alleged wrongdoing; and (6) the Compliance Office's identification number assigned to the case. The records will also include the status of each case (open or closed).

Information in the investigation records may include: (1) The name of the subject of an investigation; (2) the names of individuals whose work was reviewed as part of the investigation; (3) the names or patient numbers of Veteran patients whose medical records were reviewed in order to investigate the allegation; (4) the station at which an investigation took place; (5) the time period when the investigation took place; (6) the nature of the allegation; (7) the outcome of the investigation; (8) the recommended action; and, (9) the identification number assigned to the case. Information may be in the form of a narrative summary or synopsis, exhibits, or internal documentation and memoranda.

Records in the system will be a combination of computerized files and paper files. Both paper and electronic records may contain the information listed above, and may relate to complainants and subjects of complaints.

AUTHORITY FOR MAINTENANCE OF THE SYSTEM:

Title 38 United States Code, section 501.

PURPOSE(S):

The purpose is to establish a process to receive reports of suspected compliance violations, and to maintain a system to respond to such allegations.

ROUTINE USES OF RECORDS MAINTAINED IN THE SYSTEM, INCLUDING CATEGORIES OF USERS AND THE PURPOSES OF SUCH USES:

To the extent that records contained in the system include information protected by 45 CFR Parts 160 and 164, i.e., individually identifiable health information, and 38 U.S.C. 7332, i.e., medical treatment information related to drug abuse, alcoholism or alcohol abuse, sickle cell anemia or infection with the human immunodeficiency virus, that information cannot be disclosed under a routine use unless there is also specific statutory authority in 38 U.S.C. 7332 and regulatory authority in 45 CFR Parts 160 and 164 permitting disclosure.

1. The record of an individual who is covered by this system may be disclosed to a Member of Congress or staff person acting for the member when the member or staff person requests the records on behalf of and at the request of that individual.

2. Any information in this system may be disclosed to a Federal agency, upon its official request, to the extent that it is relevant and necessary to that agency's decision regarding: the hiring, retention or transfer of an employee, the issuance of a security clearance, the letting of a contract, or the issuance or continuance of a license, grant or other benefit given by that agency. However, in accordance with an agreement with the U.S. Postal Service, disclosures to the U.S. Postal Service for decisions concerning the employment of Veterans will only be made with the Veteran's prior written consent.

3. Any information in this system may be disclosed to a State or local agency, upon its official request, to the extent that it is relevant and necessary to that agency's decision on: The hiring, transfer or retention of an employee, the issuance of a security clearance, the letting of a contract, or the issuance or continuance of a license, grant or other benefit by the agency; provided, that if the information pertains to a Veteran, the name and address of the Veteran will not be disclosed unless the name and address is provided first by the requesting State or local agency.

4. Any information in this system, except the name and address of a Veteran, may be disclosed to a Federal, State or local agency maintaining civil or criminal violation records, or other pertinent information such as prior employment history, prior Federal employment background investigations, or personal or educational background in order for VA to obtain information relevant to the hiring, transfer or retention of an employee, the letting of a contract, the granting of a security clearance, or the issuance of a grant or other benefit. The name and address of a Veteran may be disclosed to a Federal agency under this routine use if this information has been requested by the Federal agency in order to respond to the VA inquiry.

5. Any information in this system, except the name and address of a Veteran, which is relevant to a suspected violation or reasonably imminent violation of law, whether civil, criminal or regulatory in nature and whether arising by general or program statute or by regulation, rule or order issued pursuant thereto, may be disclosed to a Federal, State, local or foreign agency charged with the responsibility of investigating or prosecuting such violation, or charged with enforcing or implementing the statute, regulation, rule or order issued pursuant thereto.

6. The name and address of a Veteran, which is relevant to a suspected violation or reasonably imminent violation of law, whether civil, criminal or regulatory in nature and whether arising by general or program statute or by regulation, rule or order issued pursuant thereto, may be disclosed to a Federal agency charged with the responsibility of investigating or prosecuting such violation, or charged with enforcing or implementing the statute, regulation, rule or order issued pursuant thereto, in response to its official request.

7. The name and address of a Veteran, which is relevant to a suspected violation or reasonably imminent violation of law concerning public health or safety, whether civil, criminal or regulatory in nature and whether arising by general or program statute or by regulation, rule or order issued pursuant thereto, may be disclosed to any foreign, State or local governmental agency or instrumentality charged under applicable law with the protection of the public health or safety if a qualified representative of such organization, agency or instrumentality has made a written request that such name and address be provided for a purpose authorized by law.

8. Any information in this system may be disclosed to the U.S. Office of Special Counsel, upon its official request, when required for the Special Counsel's

review of the complainant's allegations of prohibited personnel practices.

9. The name, address, telephone number, and other identifying data, including title, date and place of birth, social security number, and summary information concerning an individual who, for fraudulent or deceitful conduct either as an employee or while conducting or seeking to conduct business with the Agency, has been convicted of violating Federal or State law or has been debarred or suspended from doing business with VA, may be furnished to other Federal agencies to assist such agencies in preventing and detecting possible fraud or abuse by such individual in their operations and programs. This routine use applies to all information in this system of records which can be retrieved by name or by some identifier assigned to an individual, regardless of whether the information concerns the individual in a personal or in an entrepreneurial capacity.

10. Records from this system of records may be disclosed to a Federal agency or to a State or local government licensing board or to the Federation of State Medical Boards or a similar non-government entity which maintains records concerning individuals' employment histories or concerning the issuance, retention or revocation of licenses, certifications, or registration necessary to practice an occupation, profession or specialty, in order for the agency to obtain information relevant to an agency decision concerning the hiring, retention or termination of an employee or to inform a Federal agency or licensing boards or the appropriate non-government entities about the health care practices of a terminated, resigned or retired health care employee whose professional health care activity so significantly failed to conform to generally accepted standards of professional medical practice as to raise reasonable concern for the health and safety of patients in the private sector or from another Federal agency. These records may also be disclosed as part of an ongoing computer matching program to accomplish these purposes.

11. Disclosure of relevant information may be made to individuals, organizations, private or public agencies, etc., with whom VA has a contract or agreement to perform such services as VA may deem practicable for the purposes of laws administered by VA, in order for the contractor or subcontractor to perform the services of the contract or agreement.

12. For program review purposes and the seeking of accreditation or certification, disclosure may be made to survey teams of The Joint Commission, College of American Pathologists, American Association of Blood Banks, and similar national accreditation agencies or boards with which VA has a contract or agreement to conduct such reviews, but only to the extent that the information is necessary and relevant to the review.

13. Disclosure may be made to the National Archives and Records Administration (NARA) and the General Services Administration (GSA) in records management inspections conducted under authority of Title 44, Chapter 29, of the United States Code.

14. VA may disclose information from this system of records to the DoJ, either on VA's initiative or in response to DoJ's request for the information, after either VA or DoJ determines that such information is relevant to DoJ's representation of the United States or any of its components in legal proceedings before a court or adjudicative body, provided that, in each case, the agency also determines prior to disclosure that release of the records to the DoJ is a use of the information contained in the records that is compatible with the purpose for which VA collected the records. VA, on its own initiative, may disclose records in this system of records in legal proceedings before a court or administrative body after determining that the disclosure of the records to the court or administrative body is a use of the information contained in the records that is compatible with the purpose for which VA collected the records.

15. Disclosure to other Federal agencies that may be made to assist such agencies in preventing and detecting possible fraud or abuse by individuals in their operations and programs.

16. VA may, on its own initiative, disclose any information or records to appropriate agencies, entities, and persons when: (1) VA suspects or has confirmed that the integrity or confidentiality of information in the system of records has been compromised; (2) the Department has determined that as a result of the suspected or confirmed compromise, there is a risk of embarrassment or harm to the reputations of the record subjects, harm to economic or property interests, identity theft or fraud, or harm to the security, confidentiality, or integrity of this system or other systems or programs (whether maintained by the Department or another agency or entity) that rely upon the potentially compromised information; and (3) the disclosure is to agencies, entities, or persons whom VA determines are reasonably necessary to assist or carry out the Department's efforts to respond to the suspected or confirmed compromise and prevent, minimize, or remedy such harm. This routine use permits disclosures by the Department to respond to a suspected or confirmed data breach, including the conduct of any risk analysis or provision of credit protection services as provided in 38 U.S.C. 5724, as the terms are defined in 38 U.S.C. 5727.

POLICIES AND PRACTICES FOR STORING, RETRIEVING, ACCESSING, RETAINING, AND DISPOSING OF RECORDS IN THE SYSTEM:

STORAGE:

All reports of suspected noncompliance with VHA business practice will be documented in a computerized database and assigned a unique identification number. Paper files which contain documents collected in association with reviewing the case, such as memoranda, policies, or examples of work produced as a result of the complaint should be electronically file.

RETRIEVABILITY:

Both electronic and paper case files will be stored and individually retrieved by the same unique identification number, not by name.

SAFEGUARDS:

Access to computerized information in the database is restricted to authorized personnel on a need-to-know basis. Documentation will be maintained in a secure environment in the VHA Office of Compliance and Business Integrity, the Compliance and Business Integrity Officers located at the network and medical center. Physical access to printouts and data terminals will be limited to authorized personnel.

Access to file folders is restricted to authorized personnel on a need-to-know basis. Paper files should be maintained in file cabinets or closets and are locked after duty hours. These files are under the control of the Compliance and Business Integrity Officer or his or her designees.

RETENTION AND DISPOSAL:

Computerized records will be retained indefinitely. Periodic system back-ups will be employed for record protection. If disk space is limited, the records will be archived to tape or disk in accordance with established practice. Paper records will be maintained and disposed of in accordance with records disposition authority approved by the Archivist of the United States.

SYSTEM MANAGER(S) AND ADDRESS:

VHA Office of Compliance and Business Integrity (10B3), Department of

Veterans Affairs, 810 Vermont Avenue, NW., Washington, DC 20420.

NOTIFICATION PROCEDURE:

An individual who wishes to know if a record is being maintained by VHA Office of Compliance and Business Integrity under his or her name or wants to determine the contents of such records should submit a written request or apply in person to the local VA medical center.

RECORD ACCESS PROCEDURE:

An individual who seeks access to or wishes to contest records maintained under his or her name in this system may write, call or visit the VHA Office of Compliance and Business Integrity (10B3).

CONTESTING RECORD PROCEDURES:

(See Record Access Procedures above.)

RECORD SOURCE CATEGORIES:

The information in this system will be obtained from calls that are received through the VHA Compliance and Business Integrity Help Line and reports received through other sources. Information is obtained from VHA employees, Veterans, third parties such as contractors, and VHA records which may include billing data, patient medical records, policies and procedures, and memoranda.

[FR Doc. E9–19628 Filed 8–14–09; 8:45 am]

BILLING CODE 8320–01–P

Federal Register

Monday,
August 17, 2009

Part II

Department of Transportation

Pipeline and Hazardous Materials Safety Administration

Information Collection; Notice

DEPARTMENT OF TRANSPORTATION

Pipeline and Hazardous Materials Safety Administration

[Docket No. PHMSA–2008–0211]

Information Collection

AGENCY: Pipeline and Hazardous Materials Safety Administration.

ACTION: Request for public comments and OMB approval of existing information collection.

SUMMARY: On September 4, 2008, as required by the Paperwork Reduction Act of 1995, the Pipeline and Hazardous Materials Safety Administration (PHMSA) published a notice in the **Federal Register** of its intent to revise the agency's standardized forms for reporting pipeline incidents and accidents. PHMSA later extended the time for responding to that notice until December 12, 2008, and received timely comments from several pipeline operators, five trade associations representing pipeline operators, the association representing State pipeline safety regulators, two State pipeline regulatory agencies, and one public interest group. PHMSA is publishing this notice to respond to comments, provide the public with an additional 30 days to comment on the proposed revisions to the incident and accident report forms, including the form instructions, and announce that the revised Information Collections will be submitted to the Office of Management and Budget (OMB) for approval.

DATES: Comments on this notice must be received by September 16, 2009 to be assured of consideration.

FOR FURTHER INFORMATION CONTACT: Roger Little by telephone at 202–366–4569, by fax at 202–366–4566, by e-mail at *Roger.Little@dot.gov,* or by mail at U.S. Department of Transportation, Pipeline and Hazardous Materials Safety Administration, 1200 New Jersey Avenue, SE., PHP–10, Washington, DC 20590–0001.

ADDRESSES: You may submit comments identified by the docket number PHMSA–2008–0211 by any of the following methods:

- *Federal eRulemaking Portal: http://www.regulations.gov.* Follow the online instructions for submitting comments.
- *Fax:* 1–202–395–6566
- *Mail:* Office of Information and Regulatory Affairs (OIRA), Office of Management and Budget (OMB), 726 Jackson Place, NW., Washington, DC 20503, ATTN: Desk Officer for Department of Transportation (DOT).
- *E-mail:* Office of Information and Regulatory Affairs (OIRA), Office of Management and Budget, at the following address: *oira_submissions@omb.eop.gov.*

Requests for a copy of the information collection should be directed to Roger Little by telephone at 202–366–4569, by fax at 202–366–4566, by e-mail at *Roger.Little@dot.gov,* or by mail at U.S. Department of Transportation, Pipeline and Hazardous Materials Safety Administration, 1200 New Jersey Avenue, SE., PHP–10, Washington, DC 20590–0001.

SUPPLEMENTARY INFORMATION: Section 1320.8(d), Title 5, Code of Federal Regulations requires PHMSA to provide interested members of the public and affected agencies an opportunity to comment on information collection and recordkeeping requests. This notice identifies revised information collection requests that PHMSA will be submitting to OMB for approval. These information collections are contained in the pipeline safety regulations, 49 CFR parts 190–199. PHMSA has revised burden estimates, where appropriate, to reflect current reporting levels or adjustments based on changes in proposed or final rules published since the information collections were last approved. The following information is provided for each information collection: (1) Title of the information collection; (2) OMB control number; (3) type of request; (4) abstract of the information collection activity; (5) description of affected public; (6) estimate of total annual reporting and recordkeeping burden; and (7) frequency of collection. PHMSA will request a three-year term of approval for each information collection activity. The comments are summarized and addressed below as specified in the following outline:

I. Background
II. Summary of Comments
A. Incident Report Form PHMSA F 7100.1, Gas Distribution Systems (Impacted Information Collection: OMB Control No. 2137–0522)
B. Incident Report Form PHMSA F 7100.2, Gas Transmission and Gathering Systems (Impacted Information Collection: OMB Control No. 2137–0522)
C. Incident Report Form PHMSA F 7000–1, Accident Report—Hazardous Liquid Pipeline Systems (Impacted Information Collection: OMB Control No. 2137–0047)
III. Proposed Information Collection Revisions and Request for Comments

I. Background

The Pipeline and Hazardous Materials Safety Administration (PHMSA) requires that an operator of a covered pipeline facility file a written report within 30 days of certain adverse events, defined by regulation as either an accident or incident, 49 CFR 191.1–191.27, 195.48–195.63 (2008).[1] PHMSA further requires that those reports be submitted to the agency on one of three standardized forms, PHMSA Form F 7100.1, Incident Report—Gas Distribution Pipelines, PHMSA Form F 7100.2, Incident Report—Gas Transmission and Gathering Systems, and PHMSA Form F 7000–1—Accident Report for Hazardous Liquid Pipeline Systems. PHMSA uses the information collected from these forms (1) to identify trends in the occurrence of safety-related problems, (2) to appropriately target its performance of risk-based inspections, and (3) to assess the overall efficacy of its regulatory program.

PHMSA published a **Federal Register** notice on September 4, 2008 (73 FR 51697) inviting public comment on a proposal to revise PHMSA Forms F 7100.1, F 7100.2, and F 7000–1. PHMSA stated that the proposed revisions were needed ''to make the information collected more useful to'' all those concerned with pipeline safety and to provide additional, and in some instances more detailed, data for use in the development and enforcement of its risk-based regulatory regime. PHMSA published a subsequent **Federal Register** notice on October 30, 2008 (73 FR 64661) to extend the comment period to December 12, 2008.

II. Summary of Comments

During the three-month response period, the following groups provided PHMSA with comments on the proposal outlined in the September 2008 **Federal Register** notice:

—*Five industry trade associations*—American Gas Association (AGA), American Public Gas Association (APGA), American Petroleum Institute (API), American Oil Pipelines Association (AOPL), and Interstate Natural Gas Association of America (INGAA).

—*The National Association of State Pipeline Safety Representatives (NAPSR) and two State pipeline regulatory agencies*—Iowa Utilities Board (IUB) and Missouri Public Service Commission (MOPSC).

—*Nine pipeline operators*—Southern California Gas Company and San Diego Gas & Electric (SoCal/SDG&E), MidAmerican Energy Company (MidAmerican), Northern Illinois Gas Company d/b/a Nicor Gas Company (Nicor), Atmos Energy Corporation

[1] Reportable events are referred to as ''incidents'' for gas pipelines, 49 CFR § 191.3, and ''accidents'' for hazardous liquid pipelines, 49 CFR 195.50. An operator may also be required to file a supplemental report in certain circumstances.

(Atmos), Southwest Gas Corporation (Southwest), El Paso Pipeline Group (EPPG), Columbia Gas Transmission (CGT), Panhandle Energy (Panhandle), and Paiute Pipeline (Paiute).

—*The Pipeline Safety Trust*—A summary of those comments and PHMSA's responses is provided below for each of the three proposed incident report forms and related instructions.

A. Incident Report Form PHMSA F 7100.1—Gas Distribution Systems (Impacted Information Collection: OMB 2137–0522)

General Comments

Increase in requested information: AGA and APGA noted that the proposed changes would increase the length of the form from 3 to 10 pages. AGA and APGA cautioned that while such an increase was not objectionable per se, PHMSA should ensure the relevance of any additional information being collected.

PHMSA response: The increase in the total number of pages in the revised PHSMA Form F 7100.1 does not accurately reflect the information collection burden that will be placed on operators. Most of the additional pages are dedicated to Part F, Cause Information. Part F is subdivided into 8 separate categories, and an operator is only required to complete the section that relates to the primary cause of the incident. In other words, an operator will only need to answer the questions presented on pages 6 and 7 if corrosion caused the incident, on page 7 if natural force damage caused the incident and, on page 8 and 9 if excavation damage caused the incident. Similarly, depending on the location of the incident, only the Onshore or Offshore selection will need to be completed.

Moreover, the vast majority of operators elect to use PHMSA's online incident reporting form, a tool that utilizes smart navigation and formatting to filter out irrelevant sections, thereby decreasing the actual numbers of pages that must be viewed by an operator. Thus, it is misleading to suggest that the increase in the total number of pages used in the revised form is indicative of an unduly burdensome information collection.

Nevertheless, PHMSA acknowledges that the revised form will collect new, and in some instances more detailed, information. However, PHMSA has determined that the collection of such information is justified by the agency's need to identify trends in safety-related problems, to appropriately target its performance of risk-based inspections, and to assess the overall efficacy of its pipeline-safety regime.

Rely more on narrative: APGA noted that prior studies show that narrative descriptions are a better source of data on the cause of reported incidents and suggested that PHMSA should provide more guidance with respect to the information sought in that portion of the revised form, rather than increasing the number of questions in others areas.

PHMSA response: PHMSA agrees with APGA's comment regarding the successful use of narrative descriptions in identifying the cause of reported incidents in prior studies. However, those studies required the investment of substantial time and effort into data extraction, and the lack of uniformity in the information collected meant that inferences often had to be drawn to reach a final conclusion. PHMSA has carefully examined this issue and determined that its incident reporting data collection needs are ill suited to such an approach, *i.e.,* that the information submitted by operators must be presented in a standardized format that can be easily received, stored, and analyzed. The revised form is consistent with that approach.

Report vs. investigation: Many industry stakeholders argued that the revised form seeks to collect more information than is necessary for an adequate incident report. Some even suggested that the new form cannot be completed without conducting a root cause investigation for each incident.

PHMSA response: PHMSA agrees that the proposed revisions are designed to collect new, and in some instances more detailed, data on incidents, but firmly rejects the suggestion that a root cause investigation must be conducted to complete the form. To the contrary, PHMSA is confident that a prudent operator can complete the form in a reasonable amount of time based on the information available at or near the time of the incident. PHMSA also does not agree that the additional effort that may be needed in some cases to complete the revised form is unjustified. While the number of incidents that occur annually has declined in recent years, PHMSA remains committed to reducing the occurrence and mitigating the consequences of these adverse events, and more detailed data is required to support these analyses.

Changes needed in criteria for reporting: A number of commenters suggested that the criteria for a reportable incident should be changed, focusing in particular on the $50,000 threshold for property damage and noting that the combined effects of inflation, escalating property values, and increases in the price of gas require that more and more incidents be reported.

PHMSA response: PHMSA recognizes that the number of reportable incidents will increase with any rise in the cost of gas and property values. However, an incident is defined by regulation, and a rulemaking must be initiated to change that definition. That type of regulatory change is beyond the scope of this information collection request.

Time to file: MidAmerica suggested that additional data and investigation will be required to complete the revised form; therefore, the deadline for its submission to PHMSA should be extended from 30 to 60 days after an incident.

PHMSA response: The 30-day deadline for filing an incident report is set by regulation and can only be changed in a notice-and-comment rulemaking, an action that is beyond the scope of this information collection request. Nonetheless, PHMSA acknowledges that certain information may not be known by an operator within 30 days of an incident, and that is why the regulation allows operators to include additional information in supplemental reports filed after the initial report is submitted.

Relationship to pending rulemakings: Several pipeline operators noted that PHMSA is developing new rules on distribution integrity and control room management and that the revised form requests information on these issues. These operators therefore argued that the proposed revision of the incident reporting form should be deferred until those two rulemakings are completed.

PHMSA response: Congress has mandated PHMSA to use its broad authority to collect information on pipeline facilities, 49 U.S.C. 60117(b)(1)–(2), to obtain specific data from owners and operators on the role of controller fatigue in incidents and accidents. Pipeline Inspection, Protection and Safety Act (PIPES Act) of 2006, Public Law 109–468, section 20, 120 Stat. 3498 (Dec. 29, 2006). However, rather than addressing that mandate in isolation, PHMSA is coordinating its collection of that information with its pending rulemakings on distribution integrity and control room management. Distribution lines are a key part of the nation's pipeline network, and Congress has determined that additional information on the contribution of controller fatigue to the occurrence of incidents and accidents is vital to PHMSA's safety mission. These authorities provide ample support for collecting all of the information sought

in the proposed revision to the incident reporting form without further delay.

Part A, Key Report Information

Question 1 and 2,[2] *Operator identification:* IUB suggested that a mailing address is still needed for any official correspondence that may be needed in response to an incident. IUB also noted that while PHMSA may have access to an address through its Operator Identification (OPID) system, others seeking to contact the company may not have access to such information.

PHMSA response: PHMSA agrees and has made the suggested change.

Question 4, location of incident: NAPSR suggested that question 4 concerning location of an incident be modified to provide separate lines for entering City and County/Parish and to require that location be reported by GPS coordinates, including identification of the relevant ''projection'' to better define the latitude and longitude information. IUB also noted that distribution lines may be in unincorporated/undeveloped areas where a street address is not useful to define location and that some other means of describing the location is needed.

PHMSA response: Latitude and longitude were included in this form when it was last revised. This information was not included in the draft revised form, but has been restored. Industry comments on the previous revision expressed concern over requirements to specify a projection, stating that this information would not be available to many distribution pipeline operators and may be confusing. PHMSA elected at that time to omit a requirement that operators specify the projection used. Since PHMSA did not propose such a change in the September 4, 2008, notice, the requirement to report latitude and longitude is being retained as in the previous form, without a need to report projection. PHMSA has made the editorial change suggested by NAPSR to separate City and County/Parish.

Question 7, commodity released: A number of commenters noted that the term ''spilled'' is inappropriate for natural gas and suggested that it be replaced with ''released.'' NAPSR noted that natural gas and propane are the only commodities currently transported by gas distribution pipelines and suggested that other commodities listed be deleted. APGA and MidAmerican also noted that the gas distribution pipeline industry does not use the terms ''sour'' or ''wet'' to characterize gas carried and suggested that these terms be deleted or defined in the instructions.

PHMSA response: PHMSA agrees and has made the suggested changes.

Question 8, type of system: MidAmerican suggested that the need to distinguish between privately- and municipally-owned systems should be eliminated, since the same regulations are applicable to both.

PHMSA response: Part 192 safety regulations apply to both types of systems. Many outside factors affect private and municipal systems differently, however, and could result in different incident trends. This data is needed to be able to determine if incident trends are different for privately- and municipally-owned systems.

Questions 9 and 10, amount released: Several pipeline operators objected to the need to report separately the volume of commodity released intentionally and unintentionally. They noted that it would be difficult, at best, to prepare these estimates. Atmos also noted that the form should reflect that these quantities are only estimates.

PHMSA response: PHMSA agrees and has revised the form to ask only for an estimate of total commodity released.

Questions 11 and 12, number of fatalities and injuries: A number of pipeline operators suggested that PHMSA delete the category of ''Workers working on the Public Easement or near pipeline facility but not associated with this operator or this pipeline facility.'' They consider the category confusing and note that the category of ''general public'' would already account for non-operator personnel. Southwest also suggested that the category of ''emergency responders'' should be limited to non-operator personnel, since operator employees and contractors are addressed in other categories.

PHMSA response: Utility easements are used for purposes other than gas distribution pipelines. Thus, there may be workers associated with other utilities (*e.g.,* electric, cable television, sewer/water) performing work on the easement. This category of ''public'' is more likely to be involved in an incident, since they are more likely to be engaged in work that might disturb pipelines in an easement than are other members of the public. PHMSA considers it important to collect this data to be able to determine if common location of utilities is a factor contributing to incident frequency. Similar situations exist for other pipeline types with other pipelines/utilities installed in common rights-of-way, and PHMSA also collects this data for those pipelines. Therefore, PHMSA has retained this category. PHMSA agrees with Southwest that the emergency responder category was intended to apply to responders not employed by the pipeline operator and has modified the form to so indicate.

Question 15, number evacuated: MidAmerican suggested revising this question to seek the estimated number of general public evacuated, if known. They noted that non-operator emergency responders often suggest evacuation and persons self-evacuate and it may not be possible to know how many persons evacuated.

PHMSA response: PHMSA recognizes that this data will be an estimate and may be subject to some uncertainty, but does not consider that changes to the form are needed. PHMSA expects operators to exercise reasonable diligence in estimating the number of people evacuated.

Question 16, elapsed time: NAPSR suggested that this question be revised to collect a time sequence of key events such as when the operator was notified, when operator personnel arrived on site, and when the area was made safe. Other commenters noted that the form and instructions were not consistent for this question.

PHMSA response: PHMSA agrees that a time sequence would provide more useful information and eliminate the need for an operator to make the calculation implicit in the original question—time between becoming aware of the incident and making the area safe. PHMSA has revised this question to a time sequence. PHMSA has implemented this change for the other incident report forms as well.

Part B, Additional Location Information

Question 17, location of system involved: MidAmerican commented that the location of the system is of little importance and suggested that most of this question be deleted. Southwest commented that the location information sought in this question duplicates information to be collected later in the form (section F3, Excavation Damage) and therefore suggested that this question be deleted to avoid duplication. Southwest also questioned the meaning of ''bridge crossing,'' asking whether that term applied to waterway crossings or to all bridges. They noted that a bridge can cross a road, meaning that two of the available options could be selected. NAPSR suggested changing ''right-of-way'' to ''easement,'' as that term is more appropriate for use in

[2] Question numbers used in this notice refer to the numbers on the draft forms about which comments were submitted.

distribution pipelines. Southwest also noted that the terms have different legal connotations.

PHMSA response: PHMSA considers this data important to identify national trends. Excavation activities can be expected to occur more frequently in areas with utility easements, but more data is need to confirm that hypothesis. Similarly, utilities and their contractors should be more knowledgeable about one-call procedures and the need to avoid damage to underground utilities. Data is also needed to confirm that hypothesis and the need for additional regulatory action, if appropriate.

Data on bridge and other types of crossings is needed to determine if such locations are more likely to experience an incident and, if so, the steps that can be taken to mitigate the consequences thereof. In addition, whether a bridge crosses a roadway or a waterway is not as important as the fact that the pipeline must be integrated with or attached to the bridge structure. PHMSA will clarify in the instructions that only one option should be selected.

With regard to duplication, section F3 only applies if the cause of an incident is excavation damage. However, question 17 applies to all incident types. Therefore, the information sought is not unnecessarily duplicative.

PHMSA agrees that ''easement'' is a more appropriate term for distribution pipelines and has used that term.

Question 18, area of failure: Nicor and Atmos objected to the use of the undefined term ''failure'' and commented that an incident may result from circumstances outside the control of a pipeline operator, *e.g.,* impact by a non-operator vehicle and not from a ''failure'' of the pipeline. In commenting on the gas transmission form, INGAA also noted that incidents can result from inappropriate but intentional releases of gas in which a failure does not occur. IUB noted that the options available on the form were not adequate to address many situations. For example, IUB observed that most underground pipelines are simply buried under soil, but that this is not one of the options for selection. Instead, it would need to be reported as ''other'' and described. IUB considered it inappropriate that reporting of the most common situation should be relegated to ''other.'' APGA also noted the need for an ''under soil'' selection. IUB also noted that the options do not address underground valve vaults and questioned the characterization of ''in an open ditch'' as an above-ground failure.

PHMSA response: The comments questioning the use of the term ''failure'' relate principally to the issue of liability. PHMSA recognizes in that regard that incidents may be caused by circumstances outside the control of a pipeline operator, and that the operator may not be culpable for their occurrence. However, a failure usually still occurs, *i.e.,* pipe or some appurtenance that is supposed to contain transported gas fails to do so and gas is released. It is important to collect data on where these failures occur in order to be able to identify trends that may indicate a need for additional action, *e.g.,* additional regulations or increased coordination with the other agencies with jurisdiction over the activities that can affect pipelines. Nevertheless, PHMSA recognizes that incidents can result from non-failure releases and has revised the form to avoid the use of the term ''failure,'' instead referring to ''area of incident.'' PHMSA will clarify in the instructions that this is to describe the point at which gas was released from the pipeline facility vs. where consequences were realized (*e.g.,* neighboring building in which released gas collected resulting in ignition).

PHMSA agrees with IUB that the options provided on the form did not adequately describe many typical installations, including ''under soil.'' PHMSA has revised the form to include those installations identified by IUB.

Part C, Additional Facility Information

Question 20, information collected when mains or services are involved: NAPSR suggested that examples be added for pipe specification (*e.g.,* API–5L, ASTM D2513). Several pipeline operators also suggested that the meaning of ''pipe specification'' was not clear. IUB commented that the original specification may not be known and that ''unknown'' should therefore be an option. Southwest suggested that the listed coating types be reviewed as they present some likelihood of overlap and confusion. Some pipeline operators also suggested that ''unknown'' needed to be an option for pipe coating; they also noted that this information was only important for incidents resulting from external corrosion. Some operators suggested that depth of cover is not a parameter of importance, or that it is important only on initial installation. MidAmerican suggested that none of the information sought in this question has much value for distribution pipelines. Several commenters also pointed out that numbering within this question was incorrect.

PHMSA response: PHMSA has adopted NAPSR's suggestion and added examples of pipe specification. PHMSA believes this obviates the need for a definition of the term. PHMSA has also added an option for ''unknown'' for all of the information, except nominal pipe size.

However, PHMSA rejects the notion that depth of cover is not important. It is true that requirements for depth of cover apply at installation. Nevertheless, inadequate depth of cover could be a factor in why incidents occur. The data that will be collected through this question will enable analyses to determine whether changes in depth of cover requirements or other mitigative actions may be needed. Similarly, PHMSA considers that the other data sought in this question is necessary to evaluate possible trends in incidents. PHMSA does not consider that collecting this information will impose unreasonable burdens, particularly since an option has been provided to indicate ''unknown'' if the information is not readily discernible.

PHMSA has corrected the numbering.

Question 21, type of release: APGA suggested that overpressure is more appropriately classified as the cause of a failure and should therefore be removed as a type of failure.

PHMSA response: PHMSA agrees and has made the change.

Question 22, material involved: NAPSR suggested adding Cellulose Acetate Butyrate (CAB) as a type of plastic pipe. APGA suggested that more instruction was needed to assure appropriate reporting of polyethylene (PE) and cross-linked PE or, alternatively, that the standard number for the pipe should be reported. Atmos noted that specified minimum yield stress (SMYS) is not an important parameter for distribution piping and suggested that it be deleted. Several commenters noted that standard dimension ratio (SDR) is not applicable to all plastic pipe and suggested that an option to report wall thickness be provided. For PE pipe, Atmos noted that ''grade'' is not an appropriate concept and Southwest suggested replacing this sub-question with reporting of the Pipe Material Designation Code. Several commenters identified the need to allow ''unknown'' and ''other'' as options for the information sought in this question.

PHMSA response: PHMSA agrees and has made the suggested changes. The form has been modified to add the designator PEX for cross-linked polyethylene, which is commonly known by that acronym.

Question 23, year of installation: IUB suggested that the form allow for ''unknown,'' as operators may not always know the year in which some components of a pipeline were installed.

PHMSA response: PHMSA agrees and has made the change.

Part D, Additional Consequence Information

Question 24, cost data: MOPSC, Nicor, and Atmos noted that the cost of repair and the cost of emergency response are not required to be considered by 49 CFR 191.3 in determining whether an incident has occurred. They therefore suggested that it is not appropriate to collect this data. Most commenters suggested that cost of emergency response be limited to response costs incurred by the pipeline operator. Costs of outside response agencies are difficult to obtain and are often not directly comparable between jurisdictions. MidAmerican and Southwest questioned the need to estimate separately the cost of gas released intentionally and unintentionally. Several commenters also requested that the form explicitly recognize that the reported costs are expected to be estimates. Southwest asked for guidance concerning what estimated costs are sufficient to submit a ''final'' report, noting that some repair and restoration costs (*e.g.,* repaving) can be incurred over a significant period of time. MidAmerican suggested that the requirement to report emergency response costs could lead to a need for an administrative procedure to capture costs in real time that could delay emergency response.

PHMSA response: The revision of this form does not change the criteria of an incident as defined in 49 CFR 191.3. Nevertheless, costs are incurred for repairs and for emergency response when most incidents occur. Consideration of these costs helps identify the relative significance of an incident, and PHMSA thus considers it appropriate to collect this data. PHMSA agrees that it would be an unreasonable burden to require operators to estimate the costs incurred by outside emergency response agencies and has limited this factor to costs incurred by the operator for emergency response. PHMSA has eliminated the need to estimate costs separately for intentionally and unintentionally released gas, consistent with the changes discussed above for questions 9 and 10. PHMSA has modified the form to note explicitly that the reported costs are expected to be estimates.

With respect to the question asked by Southwest, PHMSA does not consider it practical to provide definitive guidance for when cost estimates can be considered final. This will vary depending on each particular situation, and inherently requires a judgment on the part of the operator. PHMSA expects that all significant costs associated with an incident will be estimated as part of the initial or a supplemental incident report, regardless of whether those costs are incurred soon after an incident or at some later time. Operator judgments in this regard will be reviewed as part of the regulator's investigation of an incident, and additional supplemental incident reports may be requested if the regulator concludes that significant costs have not been included in reported estimates.

With respect to the potential for delaying emergency response, PHMSA considers that this claim is exaggerated. This form does not require that precise costs be reported. Real-time collection of cost data is neither needed nor required. Operators will be able to estimate costs for emergency response after an event and without affecting response during an incident.

Question 25, customers out of service: SoCal/SDG&E, Nicor, and MidAmerican questioned the need to report this information. They suggested that the number of customers affected by an incident is not related to safety and that the need to report could create a disincentive to shut off services that might be contrary to safety. Nicor noted that outside emergency responders often turn off service to customers regardless of the seriousness of an incident. Southwest suggested that this question be re-phrased to seek total number of ''customer accounts'' out of service. They note that in the case of master meter accounts, a pipeline operator may not know the number of customers beyond the master meter.

PHMSA response: While subject to some degree of uncertainty, PHMSA has determined that the number of customers placed out of service as a result of an incident is a reasonable and readily available measure that helps to quantify the relative significance of an incident. PHMSA has therefore retained the requirement to report this information. PHMSA has not changed the terminology as suggested by Southwest. PHMSA is concerned that the number of ''accounts'' could lead to other confusion. PHMSA agrees that what is to be reported is the number of customers served by the pipeline operator, and that in the case of a master meter this would be one; PHMSA does not expect operators to estimate how many additional customers are beyond a master meter that the operator serves.

Part E, Additional Operating Information

Question 26, estimated pressure: In addition to asking for the estimated pressure at the point and time of the incident, IUB suggested asking for the normal operating pressure as distribution systems often operate below their maximum allowable operating pressure (MAOP) and this information could be relevant to safety considerations.

PHMSA response: PHMSA agrees and has added this question.

Question 28, MAOP: MidAmerican commented that this question should be deleted as this parameter is inspected by State utility boards and need not be reported here. Southwest recommended that 49 CFR 192.621 be referenced as another section under which a distribution pipeline MAOP may be established.

PHMSA response: PHMSA understands that the established MAOP is subject to review by State pipeline safety regulators, but considers the information to be relevant to evaluating an incident or to subsequent analysis of incident trends. PHMSA has made the addition suggested by Southwest.

Question 29, how detected: MidAmerican suggested that this question be deleted since an operator may not be aware of how an incident was detected. It may have been reported to the operator by emergency response personnel or others who may not have that information.

PHMSA response: PHMSA has revised this question to ask how the incident was initially identified by the operator. Notification by emergency responders is one of the options provided for selection. Operators need not report how those reporting an incident became aware of it, only how the operator became aware.

Questions 30 and 31, controller involvement: AGA and Southwest suggested that these questions be deleted until the definition of controller was further clarified in the pending rulemaking on control room management. Several other commenters suggested that controller actions were not relevant for distribution pipelines and that the questions should therefore be deleted. AGA suggested adding an option for ''NA'' for cases where a controller had no involvement and another option to indicate that the extent of controller involvement was still under investigation.

PHMSA response: As previously noted, Congress ordered PHMSA to collect information on the role of controller fatigue in incidents and accidents, and the agency is coordinating the execution of that mandate with its pending rulemaking on control room management. Nevertheless, PHMSA has responded to

the comments received from the various stakeholders by significantly reducing the amount of information sought in this section of the form, much of which PHMSA will obtain through the use of alternative means, including accident investigations. Having taken these steps, PHMSA is confident that it has resolved any past concerns over the information sought in this section. PHMSA has also added options in the controller involvement section for ''NA'' and result pending further investigation as suggested.

Questions 32 and 33, drug and alcohol testing: AGA and APGA suggested that the number of operator employees and contractors be reported separately rather than together. AGA further suggested that the form make clear that the only contractors to be reported are those engaged by the pipeline operator. Southwest noted that the form implicitly assumes that a drug or alcohol test was required as a result of the incident and suggested that the form be revised to first report whether such a test was required.

PHMSA response: PHMSA agrees and has made the suggested changes. These questions have been modified to ask first if a post-incident drug or alcohol test was required and then separately to report the number of operator employees and operator-employed contractors who failed such tests.

Question 34, operator qualification: AGA commented that whether an incident involved a task covered under operator qualification requirements (*i.e.,* a ''covered task'') is a judgment that would be part of an incident investigation rather than a report. Nicor suggested adding ''NA'' as an option since they did not believe there was a way to indicate that a covered task was not involved.

PHMSA response: PHMSA recognizes that identifying whether a covered task was involved might be part of an incident investigation and not immediately obvious upon occurrence. That does not mean, however, that it is inappropriate to report the information. There are other questions posed on this form that will require some investigation to answer. Collection of this data, including whether a covered task was involved and if employees were qualified, is important to analyzing trends to determine if regulations may be inefficient in preventing incidents. PHMSA notes that Nicor's suggested change is not needed. The form asks if actions that led to an incident were a covered task. If they were not, *i.e.,* if no covered task was involved, then an operator simply reports ''no.'' PHMSA has moved these questions to Part F, Cause F7—Incorrect Operations, so they only need to be answered for incidents where personnel errors are the principal cause.

Part F, Cause Information

Cause categories: Southwest suggested that this form should be consistent with causes being considered for distribution integrity management under a rulemaking docket that is still open.

PHMSA response: Based in part on the contribution and views of industry stakeholders, including Southwest, the proposed rule on distribution integrity management only incorporates the broad cause categories that are listed in the revised incident reporting form, and those categories are unchanged from the previous version of the form. Thus, the cause categories are consistent with those used in the pending rule on distribution integrity management and the prior versions of this form and are well-known throughout the pipeline safety community. Moreover, the additional information requested in the revised form, including the sub-categories not explicitly included in the proposed integrity management rule, are important for analyzing incident trends. Lastly, PHMSA will address cause categories for the distribution integrity management and the annual report form for distribution systems in a subsequent **Federal Register** notice and coordinated with the pending distribution integrity management rulemaking. While we do not anticipate any changes to cause categories on incident forms as a result of the pending rulemaking, PHMSA will review the cause categories on the distribution annual report in the course of that rulemaking and align the cause categories with those implemented for incident forms through this **Federal Register** notice.

Part F, F1—Corrosion Failure

Internal corrosion: The draft form posed a number of questions for incidents caused by external corrosion, but none for those related to internal corrosion. NAPSR suggested information that should be sought for internal-corrosion incidents. This included whether corrosion inhibitors were used, whether the interior was coated or lined with protective coating, whether corrosion coupons were used for monitoring, and an indication of whether the location of the incident was one at which internal corrosion might have been anticipated (*e.g.,* low point, drop out). MOPSC also suggested collecting data about the nature of the location where the failure occurred. Southwest suggested asking if liquids were found in the system.

PHMSA response: PHMSA agrees and has added the questions NAPSR and Southwest suggested.

Cathodic protection: MidAmerican suggested that the question relating to when cathodic protection (CP) was started should be made optional, because this information might not be available for older systems. They also suggested that the information might be of limited use, because it will not be clear whether protection was adequate.

PHMSA response: PHMSA has added an option for ''unknown'' to address those situations where operators might not know when protection was started for older systems. PHMSA understands that the adequacy of CP could still be questionable, but whether or not CP was provided is an objective data element that is relevant for incident trend analyses. In fact, a report that an external-corrosion incident occurred in a system that was protected by CP from installation could well indicate potential adequacy issues for the CP.

Part F, F2—Natural Force Damage

Temperature: NAPSR suggested creating a separate sub-category for natural or forest fires and eliminating the sub-question regarding these under the temperature sub-cause. Southwest commented favorably on treatment of forest fires under ''temperature'' but asked if it would apply to fires caused by arson.

PHMSA response: PHMSA agrees that treating forest fires as a sub-category of temperature was inadequate. PHMSA has modified the form to treat incidents caused by outside fires in two places. One is under natural force damage—lightning, as a sub-category indicating a secondary impact such as resulting from nearby fires. The other is under outside force damage (F4) for nearby industrial, man-made, or other non-natural fire/explosion as the primary cause of the failure. Man-made fires, even if forest fires, would be reported under F4.

Part F, F3—Excavation Damage

Several commenters suggested changes to the additional information sought for incidents caused by excavation damage. Among them:

- Deleting unknown/other as a choice for location, since operators should know the location.
- Requiring detailed information concerning the one-call notification.
- Clarifying the information required for utilities in common trenches.
- Clarifying that the name of excavator is a company name vs. an

individual or deleting the requirement to report the name.

- Rearranging the form.
- Adding additional types of markings.
- Requiring additional information about the interaction between the pipeline operator and those making one-call requests.
- Eliminating the questions concerning whether the excavator incurred downtime and whether the excavation had been ongoing for more than one month.
- Deferring to the Common Ground Alliance's Damage Information Reporting Tool (DIRT).
- Deleting information about circumstances over which the operator had no control.
- Deleting the question about whether notification of excavation had been received, because excavators are required to notify.
- Deleting the type of excavator and work performed.
- Deleting the type of locator.
- Requiring only mandatory DIRT fields or requiring reporting via DIRT rather than duplicating their reporting requirements.

PHMSA response: The Common Ground Alliance (CGA) is the recognized authority for preventing excavation damage of underground utilities. The CGA has determined the information necessary to evaluate excavation damage trends via its DIRT system. PHMSA has adopted in this form the fields defined within the DIRT system as mandatory. Collecting information on excavation damage consistent with DIRT will allow for thorough analyses to identify trends related to excavation damage. It will also allow comparative analyses to consider information reported to DIRT by other underground utility operators, thereby expanding the database and potentially affording additional insights.

Part F, F4—Other Outside Force Damage

Fire-caused: AGA recommended deleting the sub-category related to events caused by nearby fires. They contend that these events are outside of PHMSA jurisdiction, and that their inclusion in DOT statistics will distort the safety record. In support of their argument, they note that the DOT incident database records 17 such events in 2007 despite hundreds of thousands of fires reported by other Federal agencies. Nicor also suggested that this category be deleted as such events should only be reported if additional damage due to the gas release exceeds reporting criteria. Southwest questioned if this category is appropriate for reporting incidents initiated by fires caused by arson.

PHMSA response: Fires whose causes are unrelated to gas distribution systems can cause situations that are reported as gas distribution incidents. AGA's citation to the 2007 DOT data proves that point. A 2003 analysis of incident data sponsored by PHMSA found that a small, but significant, percentage of reported incidents were such fire-first events. It is important to be able to identify these events when analyzing incident experience, in part to be able to separate them out as incidents that were not under the control of pipeline operators. In fact, many incidents are caused by circumstances not under the control of a pipeline operator and thus outside of PHMSA jurisdiction (*e.g.,* excavation damage). Nevertheless, it is important to be able to characterize correctly the causes of incidents in order to draw appropriate lessons from analyses of incident data. PHMSA agrees that fire-first incidents need not be reported unless reporting criteria in 49 CFR 191.3 are met, but that does not eliminate the need to capture appropriately the data for circumstances in which a report is required. PHMSA has retained this category. As described above, this category would be appropriate for reporting incidents from arson-related fires.

Damage by vehicles: AGA and Nicor recommended eliminating the sub-category for damage by vehicles not engaged in excavation. They note that vehicle accidents happen, that operators would not be culpable, and that collection of this data is thus unnecessary. Nicor and Southwest further noted that there are parameters relevant to a complete understanding of vehicle-impact events that will be unknown to pipeline operators.

PHMSA response: Culpability is not the issue. As with fire-first events, analysis of distribution pipeline incident data has shown that incidents caused by vehicle impacts are a small, but significant, percentage of all incidents. Again, PHMSA is not attempting to regulate the operation of vehicles near pipelines. It is necessary to a complete understanding of the incident experience to be able to identify incidents caused by vehicle impacts. Asking whether a vehicle barrier was in place does not pre-suppose that the absence of such a barrier was a contributing cause to an incident. The presence or absence of such barriers is a factor that can be within the control of a pipeline operator and which could be important to understanding the importance of such protection. It is therefore appropriate to identify whether such barriers were present.

Part F, F5—Pipe, Weld, or Joint Failure

General: MidAmerican commented that this section adds little value for distribution pipelines and should be deleted. Southwest suggested that this section is disorganized and that it should be restructured to ask first questions related to both metal and plastic pipe and then those specific to a type of material.

PHMSA response: PHMSA continues to consider this section important. The greater use of plastic pipe in distribution pipelines may make welds of relatively less significance, but other joints are potentially susceptible to failure. In particular, failure of mechanical/compression couplings has been the cause of a number of serious incidents on distribution pipelines. PHMSA has made some editorial changes to this section in response to other comments, but has not reorganized it. The first portion of this section relates to the portion of the pipeline involved—body of pipe or type of joint. Some of the joint types are applicable to metal and some to plastic, but the reporting operator only needs to select the single appropriate entry. The latter portion poses questions that are applicable to all pipe types. PHMSA considers this organization appropriate.

Compression couplings: NAPSR recommended that compression couplings be identified as a separate sub-cause. Failure of compression couplings has been the cause of a number of serious gas distribution pipeline incidents.

PHMSA response: PHMSA agrees and has made the recommended change.

Additional information required: NAPSR suggested including ''previous damage'' as one of the potential causes of failure. AGA suggested deleting ''design defect'' since they believe that it is unclear.

PHMSA response: PHMSA agrees with NAPSR and has made the recommended change. PHMSA did not make the change AGA suggested. PHMSA considers that design defects are a condition that could influence joint failures. PHMSA will add additional clarification in the instructions.

Plastic joints: AGA and Southwest suggested that ''butt, electrofusion'' duplicates ''socket, electrofusion'' and that one of them should be deleted.

PHMSA response: PHMSA disagrees. The electrofusion process may be the same. The presence of a pre-formed socket potentially affects the fit-up process and can affect the integrity of

the joint. PHMSA considers it worthwhile to collect data at a level of detail that would reflect these differences.

Pipe seam: Southwest questioned why the type of pipe seam was no longer of interest for seam failures.

PHMSA response: PHMSA agrees that this information is potentially important and has revised the form to restore the specification of seam type from the present form.

Pressure tests: NAPSR and Southwest recommended that the question of whether a hydrostatic test has been conducted since installation be deleted. They noted that hydrostatic tests are generally not performed for distribution pipelines. Southwest also noted that it may be difficult to determine the actual test pressure.

PHMSA response: PHMSA acknowledges that pressure tests are conducted rarely, if ever, for many distribution pipelines subsequent to initial construction, and that air or natural gas is often used as the test medium rather than water. PHMSA has revised this question to refer to pressure tests vs. hydrostatic tests. The fact that pressure tests may be rare for some distribution pipelines is not particularly relevant. Operators who have not conducted pressure tests since installation would simply check ''no'' for this question. PHMSA considers that whether a pipeline that has failed (*i.e.,* suffered an incident) had been tested is an important piece of information. PHMSA recognizes that a precise determination of test pressure may be difficult, but notes that an estimate of the test pressure should be easier to obtain and will be sufficient. PHMSA will clarify the instructions to discuss the expected degree of precision.

Part F, F6—Equipment Failure

Non-threaded failures: NAPSR suggested deletion of the clarification ''NOT pump seals'' since pumps are not used in distribution pipeline systems.

PHMSA response: PHMSA has made the suggested change.

Malfunction of control/relief equipment: IUB noted that the reason for a failure is an important piece of information not collected.

PHMSA response: A description of the failure/incident can always be included in Part G. PHMSA saw no reason why this particular incident cause should be separately identified as requiring additional explanation.

Non-threaded connection failure: IUB noted that O-rings and gaskets are seals and questioned why operators were asked to specify either of these or ''seal or packing.''

PHMSA response: PHMSA agrees that O-rings and gaskets are, technically, types of seals. They are, however, in common use and generally referred to as O-rings and gaskets rather than as seals. PHMSA has modified this question for clarity to make the choices O-rings, gaskets, and ''other'' seals or packing.

Part F, F–7, Incorrect Operation

General: APGA noted that the instructions for this section do not address all of the sub-causes. They also questioned the value of sub-categorizing these incidents.

PHMSA response: PHMSA will revise the instructions. PHMSA cannot know at this time the value of collecting information at the sub-category level, because the data has not previously been collected. PHMSA considers it worthwhile to collect this data to determine if there are sub-categories of incorrect operation that may require additional regulatory attention. Operators completing reports will only be required to check the box for the appropriate type of mal-operation, so PHMSA concludes that the additional burden required to collect this information will be minimal.

Valve left or placed in wrong position: NAPSR suggested deleting reference to caverns since cavern storage is not a part of distribution pipelines. Nicor suggested that the term ''storage'' be defined

PHMSA response: PHMSA has deleted all reference to storage. The question had asked whether incorrect valve operation resulted in overpressurization of storage. PHMSA has revised this question to ask simply whether overpressurization, of any pipeline portion/component, resulted.

Part F, F8—Other Cause

Still under investigation: For incidents still under investigation, the form noted that a supplemental incident report was required. NAPSR suggested modifying the form to require that this report be submitted within one year.

PHMSA response: The regulation requires supplemental reports, as deemed necessary, when additional relevant information is obtained. The regulation does not, however, specify a maximum time frame in which such reports must be submitted. PHMSA cannot use this change in the incident report form to impose such a requirement. PHMSA will modify the instructions to state its preference that supplemental reports addressing additional investigation be submitted within one year of the submission of the initial incident/accident report.

Instructions for Incident Report Form PHMSA F 7100.1—Gas Distribution Systems

In response to many of the comments received, PHMSA has revised the instructions to reflect changes made in the form and for editorial purposes. PHMSA also received the following specific comments on the instructions:

Duplication of the form: Many commenters noted that a large portion of the proposed instructions was duplicative of the information already provided on the incident reporting form and that such information could be deleted. These commenters also suggested that the instructions should only provide additional guidance, where needed, and that eliminating unnecessary or duplicative information would significantly shorten the instructions and make them more useful.

PHMSA response: PHMSA agrees and has deleted unnecessary duplication.

Reporting to State regulators: NAPSR and State regulators suggested that the instructions include a reminder to operators of their obligations to comply with any applicable State reporting requirements.

PHMSA response: PHMSA agrees and has added such a reminder.

Time to report: NAPSR noted that the indication that incidents are to be reported to the National Response Center by telephone within 24 hours was a deviation from past practice. The regulation, 49 CFR 191.5, requires that telephonic reports be made ''at the earliest practicable moment.'' NAPSR notes a long-standing interpretation that such reports should be made in 2 hours and questions the change to 24 hours.

PHMSA response: PHMSA agrees that this was an unintended change and has revised the instructions to reflect the long-standing 2-hour interpretation.

Cost guidance: NAPSR and MOPSC suggested that additional guidance be provided for estimating costs associated with an accident. Specifically, they suggested including guidance published in advisory bulletin ADB–94–01.

PHMSA response: PHMSA has included the guidance from the advisory bulletin.

Incidents significant in operator's judgment: An incident is defined as an event that meets certain threshold criteria or is otherwise ''significant, in the judgment of the operator.'' 49 CFR 191.3. Southwest requested that the form include guidance on PHMSA's policy toward reporting the latter category of incidents, *i.e.*, those based solely on the operator's judgment.

PHMSA response: PHMSA does not believe that the provision of any

additional guidance on this issue is appropriate or required at this time. However, PHMSA reminds operators that Form F 7100.1 must be completed and submitted regardless of whether an incident is based on the specific threshold criteria or an operator's judgment.

Classification of fatalities: Southwest suggested that the guidance on reporting an injury that ultimately results in fatality raises Health Insurance Portability and Accountability Act (HIPAA) concerns.

PHMSA response: PHMSA disagrees. The identified guidance simply states that injuries that result in a fatality within 30 days of an incident should be reported as fatalities and that injuries that result in a fatality beyond that time should be reported as injuries. This is consistent with DOT's general guidelines and does not involve information protected by HIPAA.

Comments on Burden Estimate, Form 7100.1, Incident Report—Gas Distribution System

Investigation Burden estimate: NAPSR and State regulators commented that the burden estimate did not account for the burden on State regulatory agencies to investigate incidents.

PHMSA response: The burden associated with investigations is not related to the information that is collected via this form and has been appropriately excluded.

Burden estimate: SoCal/SDG&E, Nicor, and MidAmerican commented that the burden for completing the form (estimated at 7 hours) was significantly underestimated. MidAmerican contended that the total time required to complete the form could be 20 to 40 hours or longer for complicated events. SoCal/SDG&E suggested that the burden could be reduced by redefining the thresholds for reporting incidents.

PHMSA response: The operators provided little information in support of their contention. Nicor and SoCal/SDG&E simply stated that the burden was greater than estimated by PHMSA. MidAmerican provided estimates of hours that would be required to complete some sections of the form, but without substantiation. PHMSA agrees that complicated events may take longer, but notes that the shorter time that will be required for more ''simple'' events will balance this out. PHMSA believes that MidAmerican's estimates are excessive. Even if completion of the form would require more than the seven hours estimated, the total burden of this information collection is still minimal. Operators need only complete the form if they have an incident. There are approximately 150 incidents annually on gas distribution systems, and it is rare for an individual operator to experience more than one. PHMSA considers that the value of this information for future analysis of incident trends and the factors that influence the occurrence of incidents justifies the information collection burden. The threshold for reporting incidents is defined in the regulations and no change to those regulations has been proposed. Changing the threshold is beyond the scope of this information collection request.

B. Incident Report Form PHMSA F 7100.2, Gas Transmission and Gathering Systems

General Comments (Impacted Information Collection: OMB 2137–0522)

Definition of incident: INGAA suggested that any information collection should be limited to only those events that meet the reporting thresholds for unintentional releases of gas, a limitation not included in the definition of incident in 49 CFR 191.3, but one that is included in the definition of incident in ASME/ANSI B31.8S (referenced in 49 CFR 192.945). Panhandle also suggested that a modification of the definition of incident, particularly given the recent change in the price of natural gas, should precede any change to the accompanying reporting form.

PHMSA response: The definition of an incident is established by regulation and can only be changed in a notice-and-comment rulemaking, an action that is beyond the scope of this information collection request.

Report vs. investigation: INGAA and certain pipeline operators argued that PHMSA's proposed changes to the reporting form go beyond what is necessary to report an incident and are tantamount to requiring a root cause investigation. INGAA suggested that this would likely mean that most of the incident reports submitted in 30 days would be incomplete. INGAA further suggested that the additional data items included in the new form actually undermine the original purpose of incident reporting. INGAA suggested that a rulemaking should be initiated if PHMSA wants to make changes of this magnitude.

PHMSA response: PHMSA agrees that the revised form is designed to collect new, and in some cases more detailed, data on incidents. However, PHMSA has determined that this information is needed to identify trends in the occurrence of safety-related problems, to appropriately target its performance of risk-based inspections, and to assess the overall efficacy of its pipeline-safety regime. Furthermore, PHMSA does not agree that a root cause investigation must be conducted to complete the revised form. On the contrary, PHMSA is confident that a prudent operator can complete the form in a reasonable amount of time based on the information available at or near the time of the incident. While the number of incidents that occur annually has declined in recent years, PHMSA remains committed to reducing the occurrence and mitigating the consequences of these adverse events, and more detailed data is required to support these analyses.

Relationship to pending rulemaking: INGAA and AGA argued that the data sought on potential controller involvement exceeds current regulatory requirements. INGAA and AGA also noted that a rulemaking on control room management is pending and suggested that any changes to the incident reporting forms be deferred until that proceeding is completed. Nicor, Paiute/Southwest, and SoCal/SDG&E also supported removing these questions pending completion of the control room management rulemaking.

PHMSA response: Congress has mandated that PHMSA use its broad authority to collect information on pipeline facilities, 49 U.S.C. 60117(b)(1)–(2), to obtain specific data from owners and operators on the role of controller fatigue in incidents and accidents. Pipeline Inspection, Protection and Safety Act (PIPES Act) of 2006, Public Law 109–468, section 20, 120 Stat. 3498 (Dec. 29, 2006). However, rather than addressing that mandate in isolation, PHMSA is coordinating its collection of that information with its pending rulemaking on control room management. Transmission lines are a key part of the nation's pipeline network, and Congress has determined that additional information on the contribution of controller fatigue to the occurrence of incidents and accidents is vital to PHMSA's safety mission. These authorities provide ample support for collecting all of the information sought in the proposed revision to the incident reporting form without further delay.

Time to implement: INGAA estimated that it could take up to 6 months to fully integrate the new incident reporting form and suggested that a stay of enforcement be granted with respect to any reporting problems that arise during this time. SoCal/SDG&E suggested that operators be allowed a period of three months after publication to begin using the new form. Paiute/Southwest

suggested that the substantial changes made in the incident reporting form justify PHMSA's sponsoring of a workshop to allow operators and other affected parties to discuss the underlying issues.

PHSMA response: PHMSA does not agree that the proposed incident reporting form is significantly more complicated than its current counterpart. To the contrary, PHMSA has structured the new form to make it much easier to complete than the current form in most instances. Similarly, PHMSA has determined that most of the information requested should be readily available within the 30-day reporting period, and that any new data can as in the past be submitted in a Supplemental Report. Nevertheless, PHMSA will host a Web Live Meeting or similar forum when the new form is issued to explain its contents and demonstrate its proper use. PHMSA will also consider posting these broadcasts on its Web site for later reference.

Part A, Key Report Information

Question 1 and 2, Operator identification: IUB suggested that a mailing address is still needed for any official correspondence that may be needed in response to an incident. In particular, IUB noted that while PHMSA may have access to an address through its OPID system, others seeking to contact the company may not have access to that information.

PHMSA response: PHMSA agrees and has made the suggested change.

Question 4, location of incident: NAPSR suggested adding ''GPS Coordinates'' and ''Projection'' to provide clarity and better define the latitude/longitude data.

PHMSA response: Appropriate guidance will be included in the instructions. The current state of GPS location technology is such that these sorts of descriptors are no longer necessary.

Question 6, time and date of telephonic report: INGAA and Panhandle suggested deleting this element since it could conflict with information recorded by the National Response Center (NRC). They suggested that the NRC could provide this information if needed.

PHMSA response: This information is important to demonstrate that the NRC was notified as required. This information is also important in PHMSA's evaluation of the timeliness of an operator's NRC reporting and subsequent follow-up. It adds minimal burden and will assure that the information is captured in the same database as other information related to the incident. PHMSA has retained this element.

Question 7, commodity released: Several commenters noted that ''spilled'' is an inappropriate term for gas and should be replaced with ''released.'' INGAA and Panhandle also suggested that the terms ''wet'' and ''sour'' should be defined and that the term ''synthetic gas'' is not clear. INGAA also commented that releases of propane would be hard to detect and that this commodity is generally not transported via transmission pipelines. Panhandle questioned why propane, which they contend is a hazardous liquid, is on the list. NAPSR suggested collecting the following data for sour gas: H_2S____ grains/100cf or ____ ppm and replacing ''[Neither]'' with ''[Other/Specify:____].'' They suggested that operators completing reports could specify could specify [Dry], P/L quality gas. NAPSR also noted that a number of the releases in question 31 could involve significant quantities of liquids and asked whether the volume of these liquids should be reported.

PHMSA response: PHMSA has changed ''spilled'' to ''released,'' and eliminated the questions pertaining to whether the gas released is ''wet'' or ''sour'' due to the limited usefulness of that information in ensuring public safety. Synthetic gas and propane gas have been retained. Though rare, these are transported commodities which could be involved in a reportable release. A question requiring the operator to report the amount of liquid that accompanies a gas release has been added.

Questions 9 and 10, volume released: NAPSR suggested that the acronym MCF be spelled out to avoid confusion. They noted that this typically refers to thousands of cubic feet, but that M is also used in engineering applications to denote millions. INGAA suggested revising the language of these questions to replace gas released unintentionally with gas released during the incident and gas released intentionally with gas released during mitigation and repair. MidAmerican, Paiute/Southwest and SoCal/SDG&E noted that it can be difficult to estimate the amount of gas released and to differentiate between what is intentionally and unintentionally released. They suggested simply reporting the estimated total volume released. Atmos agreed that the form should indicate that the amounts reported are expected to be estimates. Panhandle questioned the need to report any quantity of gas released unless it is associated with a criterion defining a reportable incident.

PHMSA response: ''MCF'' has been spelled out to eliminate confusion, and the questions have been revised to clarify the unintentional vs. intentional amounts of any gas released. PHMSA recognizes that it may be difficult to estimate released volumes in some situations. PHMSA only expects that a reasonable estimate be made based on the facts of the incident known by the operator, and will explain this in the instructions.

Questions 11 and 12, number of fatalities and injuries: Several commenters questioned the need for some of the information sought in these questions. For example, INGAA and Nicor suggested omitting the numbers of emergency responders and non-operator personnel working on the right-of-way, characterizing that information as without value and ambiguous. Paiute/Southwest also suggested that the category of ''emergency responders'' be limited to non-operator personnel as operator employees and contractors are addressed in other categories. Paiute/Southwest also noted that pipelines may be located in areas other than a right-of-way. Finally, Panhandle questioned the need for any of the detailed information sought, suggesting instead that all that is needed is a yes/no answer as to whether fatalities or injuries occurred and, if so, a number.

PHMSA response: Because utility rights-of-way are used for purposes other than gas pipelines, employees or persons associated with other utilities (*e.g.*, electric, other pipelines) may be performing work on the right-of-way at or near the time of an incident. PHMSA considers it important to collect data on this category of the ''public'' to determine if common location of utilities is a factor that contributes to incident frequency. Similar situations exist for other pipeline types with other pipelines/utilities installed in common rights-of-way/easements, and PHMSA also collects this data for those pipelines. For these reasons, PHMSA has retained this category. PHMSA agrees with Paiute/Southwest that the emergency responder category was intended to apply to responders not employed by the pipeline operator and has modified the form accordingly.

Question 13, was pipeline shut down: NAPSR suggested that information on the exact date and duration of pipeline shutdown be collected, noting that this may occur on the date of or subsequent to the incident depending on the circumstances presented. INGAA suggested that this question be either deleted or limited to situations where a shutdown or reduction in the capacity of a pipeline occurred for an extended

period. They contended that wide variations in the nature and duration of shutdowns would make this data of limited use and noted that details necessary to understand these variations were not being collected. Paiute/Southwest suggested that it allow for reporting of shutdowns affecting just the portion of the system in which the incident occurred. MidAmerican suggested that the duration of a shutdown is not relevant, as pipelines can remain shutdown for a variety of reasons that may not be related to the incident. Panhandle questioned the relevance of this information and suggested that the question be deleted.

PHMSA response: PHMSA recognizes that there can be wide variations in the nature, cause, and extent of shutdowns. However, PHMSA has concluded that the information is needed to enable the agency to better determine the full extent of the impact on the overall reliability of the nation's pipeline infrastructure caused by the incident. For example, shutdowns and failures can adversely affect the broader public through the loss of heat during cold periods, and the impact on at-risk communities, including homes, hospitals, nursing homes, can be particularly severe. Nonetheless, in response to the comments received on the notice, PHMSA has modified this question to collect information specific to shutdowns on the time of the shutdown, the time the incident was identified, the time that operator resources arrived on site, and the time the facility was restarted, from which meaningful durations and intervals can then be calculated.

Questions 14 and 15, did commodity ignite/explode: INGAA noted that the term explosion is highly subjective and suggested these two questions be consolidated into a single question on whether the released commodity ignited. Panhandle agreed, noting that while an ignition might sound like an explosion a true explosion cannot occur unless gas is contained.

PHMSA response: PHMSA has used the terms ''fire'' and ''explosion'' in the past without controversy and does not believe that the few isolated situations where the difference between a fire and an explosion might be relevant warrants the changes INGAA and Panhandle suggested.

Question 16, number evacuated: MidAmerican recommended that the heading be changed to ''Estimated Number of General Public Evacuated if Known.'' They suggested that the number of evacuees is likely to be unknown, because emergency services call for evacuation in an informal manner and people self-evacuate. Panhandle also stated that this number would be difficult to estimate for the same reasons.

PHMSA response: PHMSA recognizes that this data will be an estimate and may be subject to some uncertainty, but does not consider that changes to the form are needed. PHMSA expects operators to exercise reasonable diligence in estimating the number of people evacuated. The instructions will so state.

Question 17, elapsed time: NAPSR suggested that this question be revised to request a time sequence, similar to the changes they suggested for Form F 7100.1, Gas Distribution Systems. Several pipeline operators noted an inconsistency between the form and the instructions for this question. Paiute/Southwest questioned the use to which this data will be put, contending that the implied development of a national response time for an incident would be inappropriate due to differences in the circumstances of different pipeline operators in widely varying geographic locations. Panhandle questioned the value of this question, commenting that there are incidents in which operating personnel would not go to the site.

PHMSA response: PHMSA has modified this question to provide for a time sequence, similar to the change made to the gas distribution system incident report form. PHMSA has addressed the inconsistency with the instructions. PHMSA considers that it is very unlikely that a reportable incident (*i.e.,* an event involving a fatality, serious injury, or $50,000 in property damage) will occur without some representative of the operator being dispatched to the site. The time sequence asks when ''operator resources'' arrived, which would account for situations in which the personnel dispatched are contractors rather than operator personnel. PHMSA has no intention to develop a national response time limit.

Part B, Additional Location Information

Questions 20 and 21, address: NAPSR suggested separate lines be provided for City and County/Parish. NAPSR also suggested adding other options to identify locations between station numbers and to provide a segment ID and the name of the pipeline. IUB commented that the form should retain the option to provide location by section, township, and range, as this is still the best way to identify a location in rural areas. MidAmerican suggested deleting questions 21–23, based on the assumption that operators would provide geographic coordinates. INGAA suggested that question 20 should allow for, but not require, a ''zip plus 4'' zip code. Panhandle noted it is sometimes difficult to obtain zip codes for sites in rural areas.

PHMSA response: The form has been modified to separate City from County/Parish, to add space for a Pipeline Name and Segment ID and to allow for, but not require, a ''zip plus 4'' zip code. PHMSA considers the available options to identify location to be sufficient.

Question 22, operator designated location: INGAA noted that transmission pipelines associated with distribution systems are unlikely to be designated by milepost/valve station or survey station number. INGAA and Paiute/Southwest contended that the latitude/longitude information provided in question 4 should be sufficient and suggested deleting question 22.

PHMSA response: PHMSA must be able to identify the precise location of an incident for either contemporary or future purposes. The milepost/valve station/survey station information provides a designator that allows later determination of the precise location of the incident on operator drawings and records, while the latitude/longitude information allows for the incident's precise location on-site or geographically, both of which are essential for further investigation and analysis.

Question 23, Federal lands: NAPSR suggested a breakdown by type of Federal land, *e.g.,* Military, Tribal Reservation, BLM, Forest Service, Park Service.

PHMSA response: The statutory basis for issuing pipeline rights-of-way on Federal lands is 30 U.S.C. 185, and the purpose of this question is to identify incidents that occur on lands subject to that code section. Section 185 does not require a breakdown by type, as suggested by NAPSR. PHMSA does not see the utility in requiring this additional level of detail, nor does it envision any risk evaluations where this information might prove valuable.

Question 24, location of incident: NAPSR suggested requiring a name/identification for lakes, rivers, streams, or creek crossings, noting that this information can be useful and is usually readily obtainable. Nicor and Columbia suggested that ''high consequence area'' be used instead of ''covered segment'' as the term is more readily recognized. They further commented that the method by which a high consequence area (HCA) was determined and whether it is based on an identified site are not relevant and both elements should be deleted. INGAA and Panhandle noted that the method of

determining an HCA may vary over time and that this data will thus be of limited use for trending. INGAA and Panhandle also suggested that class location be part of a separate question and questioned the value of additional data elements added to this question. They recommended that this item be limited to determining whether the incident happened in an HCA and its class location.

PHMSA response: The name of the water body being crossed has been added. And the term ''high consequence area'' has replaced ''covered segment'' to reflect the term already defined in regulation and to reduce the potential for confusion. Identification of the method by which an HCA is determined is essential to PHMSA's ability to assess and validate the basic approaches operators use to determine this critical, safety-related calculation. Identification of Class Location—another primary safety indicator—has been segregated out and rewritten as its own question as suggested.

Question 25, approximate water depth: INGAA and Panhandle noted that this question will be confusing for incidents that occur offshore in piping on platforms, *i.e.,* not below the surface. INGAA suggested first asking if the incident occurred on a platform and only asking water depth for those offshore incidents that did not.

PHMSA response: The instructions will make clear that this is intended to be the water depth at the location of the incident, even if the incident occurs on a platform, and not the depth of the incident below the water.

Question 26, origin in State waters: For offshore incidents in State waters, NAPSR suggested requiring specification of the State, the Area, and the Block/Track as this is useful identifying information. Paiute/Southwest requested clarification as to the term ''origin of the accident'' and whether ''in State waters'' refers only to commercially navigable waterways.

PHMSA response: For offshore incidents in State waters, the form has been modified to obtain Area and Block/Track information to more accurately locate the incident. Commercially navigable waterways may or may not exist offshore. For an incident to be considered both ''offshore'' and ''in State waters,'' the incident would by definition not be in inland waters. This ''offshore'' determination would be made without regard for whether the waters were commercially navigable or not.

Question 27, area of failure: Nicor and Atmos objected to the use of the undefined term ''failure'' in this question and commented that an incident may result from circumstances outside the control of a pipeline operator, *e.g.,* impact by a non-operator vehicle and not from a ''failure'' of the pipeline. Nicor also noted that options for normally buried pipe and aboveground appurtenances need to be provided. IUB also noted that the options available on the form were not adequate to address many situations. For example, IUB noted that most underground pipelines are simply buried under soil, but that this is not one of the options for selection. Instead, it would need to be reported as ''other'' and described. IUB considered it inappropriate that reporting of the most common situation should be relegated to ''other.'' For transmission pipelines, IUB noted that the likelihood of pipelines being buried under a building is so remote that this option should be deleted. INGAA and Panhandle recommended adding depth of cover for underground facilities, information that is currently collected and has proven valuable. Paiute/Southwest requested clarification of the term ''open ditch.''

PHMSA response: PHMSA has replaced the word ''failure'' with ''incident'' to the extent practicable. Nonetheless, there are still some situations where the use of ''failure'' in its common definition is necessary and would not be confusing. The selections for Underground and Aboveground locations have been refined and expanded upon, each retaining an ''Other'' category to capture situations not expressly identified in the selections offered. Under soil has been included. For Underground facilities, depth-of-cover has been added as suggested.

Part C, Additional Facility Information

Question 28, pipeline function: MidAmerican commented that the term ''Transmission Line of Distribution System'' needs to be defined.

PHMSA response: This is intended to refer to a pipeline classified as transmission (usually due to operating stress levels) but operated as part of a distribution pipeline system. This will be defined in the accompanying instructions.

Question 30, part of system involved: INGAA and Panhandle commented that the data required for this question would be of little or no value and suggested that the choices be limited to below ground storage including piping, above ground storage vessels and piping, pipelines, compressors, and metering/regulation, and that all the offshore data elements should be deleted. Nicor also questioned the value of the offshore elements for incident trending and analysis.

PHMSA response: The categories have been adjusted to reflect these comments, with the exception of the elimination of the offshore elements. Offshore pipelines and facilities represent a very distinct and different set of conditions and risk factors—and available preventive and mitigative measures—than onshore pipelines and facilities, so we have retained offshore elements to capture them separately. We have deleted the collection of detailed offshore data elements relating to valving and isolation.

Question 31, item involved: INGAA and Panhandle questioned the value of many of these data elements for incident analysis, noting that the list of potential pipe coatings and equipment types is not complete and that a complete list could be very long. INGAA and Panhandle also suggested many of the seldom-involved elements be deleted. MidAmerican also commented that providing the amount of data required would be burdensome and questioned its value. For example, MidAmerican noted that pipe seam type would be of little interest for an incident resulting from excavation damage and that coating type is relevant only if the incident is caused by corrosion. Panhandle commented that this section is unclear if an incident involves other than pipe or a valve, and noted that compressor is addressed here and in Part F6. Panhandle also suggested that operators be required to only provide the information that is relevant, suggesting, for example, that wall thickness and SMYS of the pipe are not important if the incident involves a valve. NAPSR recommended adding joint as an element and requiring that the joint type be specified. Commenters noted that some of the information may not be known for older pipelines and that the form should accommodate this by allowing a response of ''unknown.'' Atmos questioned whether extruded polyethylene is a coating type. SoCal/SDG&E suggested that pipe specification should be better defined. Nicor suggested changing ''failure'' to ''incident.''

PHMSA response: Choices have been expanded and modified based on comments received, with an ''Other'' category as an option for those situations not identified by the other choices. PHMSA considers the item involved in an incident to be a basic piece of data that should be captured for all incidents. Additional data is only being collected as it pertains to the individual item selected as being involved in the incident. In particular,

with pipe being such a critical component that represents a vast majority of any pipeline asset, PHMSA believes that basic information pertaining to the pipe will be valuable for a number of analyses and also to better understand the basic characteristics of any pipeline system. We have changed ''failure'' to ''incident'' wherever practicable throughout the form.

Question 33, material involved: IUB suggested that the type of plastic be requested when an incident involves plastic pipe as well as additional information to specify the particular plastic. INGAA and Panhandle suggested that the response options be limited to steel, plastic, and other. They contended that additional information is not needed for plastic pipe, since plastic pipe is seldom used in transmission pipelines.

PHMSA response: The choices have been limited to steel, plastic, and other. PHMSA agrees that plastic pipe is not prevalent enough in transmission or gathering service to warrant capturing the type of plastic used.

Question 34, type of failure: INGAA and Panhandle noted that the proposed form no longer asks for information concerning puncture size and also omits other questions from the current form. They believe that this information has proven useful and should be retained. INGAA and Panhandle noted that overpressure is a potential cause, but not a type of failure. Nicor and Columbia suggested that there are other types of mechanical damage of potential interest besides punctures. IUB suggested value in requesting the type of joint failure for cases of failure of plastic pipe joints.

PHMSA response: Puncture and Rupture size information has been restored. We have removed overpressure as a ''Type'' of incident, and Connection Failure and have included it as a sub-category to accommodate threaded connections or other types of joints.

Part D, Additional Consequence Information

Question 35, potential impact radius (PIR): INGAA, Panhandle, and Columbia suggested deleting this question, noting that it is only relevant for an HCA and then only if method 2 was used to identify HCAs. Paiute/Southwest noted that PIRs are not calculated if method 1 is used. Some commenters also contended that the need for this information as part of an incident report is not obvious. INGAA and Panhandle also suggested that the related requirement to describe the incident footprint in the narrative be deleted, in part because the footprint will reflect subsequent material fires and will not be directly proportional to the size of a pipeline leak or rupture. Several commenters noted that PIR should be spelled out as potential impact radius (as opposed to a circle) and that the dimensions in which the size is to be reported (feet) should be included.

PHMSA response: We have modified the form so that the PIR is only required to be reported when it was calculated by the operator. The descriptive information pertaining to an incident footprint has been omitted; however, if and when an incident has occurred in an HCA, it is very important for PHMSA—as well as the operator—to understand if there were any impacts beyond the calculated PIR, and to what extent these impacts existed. If impacts of incidents are often found to extend beyond the calculated PIR, it could indicate a need for PHMSA to revise the PIR definition. As a result, several specific questions asking about these impacts now replace the more general descriptive information about the incident's footprint.

Question 36, cost data: INGAA noted that the difficulties in estimating the amount of gas released intentionally and unintentionally (*see* question 9 and 10 above) also apply here. They further suggested that the cost of the commodity be deleted, since it appears that the reporting basis will now be volume released. They suggested that cost of repair should be limited to repair of the pipeline facility and should not include costs to repair property of others. INGAA also noted that the cost of emergency response by others may be impossible to know. Columbia also noted that the information desired for cost of emergency response requires clarification. NAPSR suggested that emergency response costs be limited to those borne by the operator. Nicor and Atmos suggested that this element be deleted, along with cost of repair, since those costs are not required to be considered by 49 CFR 191.3 in determining whether an incident has occurred. Several commenters also requested that the form explicitly recognize that the reported costs are expected to be estimates. Paiute/Southwest asked for guidance concerning what estimated costs are sufficient to submit a ''final'' report, noting that some repair and restoration costs (*e.g.,* repaving) can be incurred over a significant period of time. NAPSR suggested consideration be given to adding ''customers out of service'' as done on the distribution pipeline form.

PHMSA response: The revision to this form does not change the criteria that define an incident under 49 CFR 191.3. Nevertheless, costs are incurred for repairs and for emergency response when most incidents occur, and consideration of these costs helps identify the relative significance of an incident. Thus, PHMSA considers it appropriate to collect this data. PHMSA agrees that it would be an unreasonable burden to require operators to estimate the costs incurred by outside emergency response agencies and has limited this factor to costs incurred by the operator to cover their emergency response activities. PHMSA has modified the form to note explicitly that the reported costs are expected to be estimates, including the cost of gas lost both unintentionally and intentionally as these are key components in evaluating the overall impacts of incidents. PHMSA considers that attempting to determine the ''customers out of service'' for gas transmission and gathering incidents would in most cases be too far removed from the incident involved and too difficult to obtain with any degree of certainty.

With respect to the question asked by Paiute/Southwest, PHMSA does not consider it practical to provide definitive guidance for when cost estimates are to be considered final. That determination will vary depending on the facts and circumstances of each particular incident and inherently requires an exercise of judgment by the operator. PHMSA expects that all significant costs associated with an incident will be estimated as part of the initial or a supplemental incident report, regardless of whether those costs are incurred soon after an incident or at some later time. An operator's judgment in this regard will be reviewed as part of the regulator's investigation of an incident, and additional supplemental incident reports may be requested if PHMSA (or its State partner agency) concludes that significant costs have not been included in reported estimates. It is important that PHMSA account for and understand the true and total costs of incidents which occur, not just to allow for a reasonable accounting to the public and other stakeholders, but also to improve the accuracy of any future cost-benefit analyses that PHMSA performs.

Part E, Additional Operating Information

Question 37, special regulatory circumstances: INGAA and Panhandle suggested that this question be deleted as an operator must typically report incidents in other reports required by the regulatory documents listed. Columbia and Nicor suggested that there

needed to be an option for ''none'' or ''NA.''

PHMSA response: PHMSA has deleted this question.

Question 39, MAOP: The question asks under which regulatory requirement the MAOP was determined. IUB suggested that it should also ask what the MAOP is. INGAA noted that this should be the MAOP at the point of the incident. MidAmerican recommended that the proposed paragraph asking how the MAOP was determined be deleted as irrelevant, since an MAOP determined under any of the cited regulations is acceptable and the method by which an MAOP has been determined will have no relevance to the occurrence of an incident. Panhandle noted that a change to this question may be needed to accommodate an MAOP of 80 percent SMYS.

PHMSA response: PHMSA has retained this set of questions from the existing reporting form. PHMSA agrees with Panhandle that SMYS information is increasingly important considering the agency's recent rulemakings allowing operators to increase SMYS up to 80 percent. We retained this set of questions from the existing report form, but updated the selections for SMYS determination to reflect recent rulemakings.

Question 40, overpressurization: INGAA and Panhandle suggested that this question requires clarification as to whether pressures exceeding MAOP or MAOP plus some allowable margin (*e.g.,* 10 percent) were experienced. IUB suggested that a positive answer should require that the operator also report normal operating pressure, MAOP, and pressure experienced to provide the context for an overpressure event.

PHMSA response: This question has been modified to clearly indicate which pressure range was exceeded when an overpressure occurred. PHMSA has not modified the form to collect normal operating pressure. MAOP is already collected, and operation at any pressure below MAOP is acceptable. PHMSA thus concluded that normal operating pressure (which may be below MAOP) is not needed.

Question 41, SCADA: INGAA recommended that this question be deleted as irrelevant. They note that the existence of a SCADA system does not indicate any relevant information about whether the system recorded/transmitted information concerning the incident site. Panhandle also noted that a SCADA system may be in place for nearby compressors, for example, but provide no information relevant to the incident. They asked how an operator would complete this section in such a case. Columbia also supported INGAA's comment, noting that a SCADA system may monitor areas not associated with the incident. NAPSR recommended an additional question asking if the SCADA system was operating, since it is possible that a SCADA system may exist but not be in use.

PHMSA response: PHMSA considers it appropriate to collect this information. PHMSA has explicitly included a question asking whether SCADA-based information assisted in detection of the incident. This will allow operators to identify situations in which the presence of the SCADA system was not relevant to the incident.

Question 42, how detected: INGAA and Panhandle recommended that this question be deleted. They questioned its relevance, noted that it uses terms not previously defined, and pointed out that SCADA systems do not detect incidents. Columbia and IUB also noted that the terms local controller and remote controller have not been defined. MidAmerican also supported deletion, commenting that how an incident was detected is immaterial.

PHMSA response: PHMSA does not agree that this information is immaterial. PHMSA has revised this question to ask how the incident was identified for the operator, which will accommodate those situations in which the incident was reported by others rather than being detected by the operator. PHMSA will describe what is meant by remote controller and local operating personnel in the instructions.

Question 43, leak duration: INGAA, Panhandle, and Nicor recommended revising this to ''release'' vs. ''leak,'' since the latter term presumes a leak existed and may be confusing. Paiute/Southwest questioned how the duration of a leak would be determined. Columbia agreed that ''release'' would be a better term, but also suggested that ''time to make safe'' would be a better question. IUB questioned how a ''Static Shut-in Test or Other Pressure or Leak Test'' would detect a leak and noted that Air and Ground Patrols are unlikely to identify leaks.

PHMSA response: We have deleted this question.

Questions 44–58, controller involvement: INGAA recommended deleting most of these questions as described above under General Comments. Columbia, Atmos, and IUB suggested that there should be no need to provide this information if controllers were not involved with the event. (Columbia also noted its belief that controller involvement is not a major factor in gas transmission pipeline incidents). Panhandle suggested this information need not be reported in any case, and could be requested by PHMSA if needed. Some pipeline operators and IUB noted that question 44 provides no means of reporting that controllers were not involved, only that an operator had not determined that they were involved by the date of the report. NAPSR noted that multiple responses may be needed if more than one controller is involved and that the form does not accommodate this need. NAPSR also suggested clarifying editorial changes. IUB noted that the first question should be whether the pipeline has controllers, since many do not. Panhandle noted that there is no requirement in Part 192 for a SCADA system and suggested that questions concerning SCADA use are trying to apply a requirement not presently in the regulations.

PHMSA response: Consistent with a recommendation made by the National Transportation Safety Board (NTSB), Congress ordered PHMSA to obtain specific data from owners and operators on the role of controller fatigue in incidents reporting forms. Pipeline Inspection, Protection and Safety Act (PIPES Act) of 2006, Public Law 109–468, section 20, 120 Stat. 3498 (Dec. 29, 2006). Nonetheless, PHMSA has reduced the amount of information required by these questions to allow for reporting that the facility was not monitored by controllers or that the operator determined that a review of controller actions was not needed. The revised form also allows for reporting review results that determined there were no control room/controller issues. PHMSA considers that this is the minimum information for it to satisfy the statutory requirement. PHMSA agrees that SCADA systems are not required, but notes that many pipelines incorporate such systems. Questions concerning SCADA do not imply a requirement to add SCADA systems and PHMSA currently has no intention of establishing such a requirement.

Part F, Cause Information

General: INGAA recommended reorganizing this section into ten cause categories to be consistent with ASME/ANSI B31.8S and the reporting required for integrity management.

PHMSA response: PHMSA has chosen to retain its traditional high-level Cause categories to accommodate, to the extent possible, historical trending to include data from incidents already reported. PHMSA has made minor editorial changes to the Causes described on the form to address an NTSB recommendation that PHMSA align their Cause categories between the two

transmission pipeline types—Gas Transmission/Gathering and Hazardous Liquid. In addition to aligning these Cause and sub-cause categories, PHMSA has added several new sub-categories to reduce the number of ''Other'' incidents currently being reported by the regulated community across all pipeline types. Additionally, PHMSA has reorganized one Cause category significantly to better segregate sub-categories of Causes associated with construction-, fabrication-, installation-, and original manufacturing-related incidents, while adding a new sub-category for Environmental Cracking-related causes such as Stress Corrosion Cracking, Sulfide Stress Cracking, and Hydrogen Stress Cracking.

PHMSA appreciates the importance of the gas industry's ability to cross reference the threat categories outlined in B31.8S with incident Causes captured by PHMSA, and PHMSA has crafted their Cause categories and sub-categories such that PHMSA's incidents can be cleanly mapped to the specific threat categories listed in B31.8S. In addition, by accommodating this cross-mapping of threats and Incident Causes, PHMSA's pending changes to Gas Integrity Management reporting will likewise support future analyses of the B31.8S threat categories against PHMSA incident Causes and Integrity Management reports. With the addition of the new sub-cause categories on PHMSA's form, INGAA and ASME may want to consider revisions to B31.8S to fully account for all of the incident causes that will now be captured in PHMSA's data.

Part F, F1—Corrosion

General: INGAA and Columbia suggested that most of the detailed questions were confusing and would be better addressed through a narrative, if needed at all. They did not consider that this information is valuable for analysis or trending.

PHMSA response: The information being requested is basic information pertaining to incidents caused by corrosion, all of which should be clearly understood and readily obtainable. As corrosion continues to be a leading cause of incidents, the collection of this basic information is essential to PHMSA's efforts at further prevention. Information collected by narrative is much more difficult to use for subsequent analyses.

External corrosion: INGAA and Panhandle suggested that the phrase ''or in contact with the ground'' was confusing and irrelevant. They suggested the question be changed to, ''Was the failed item buried?'' Columbia and Panhandle noted that cathodic protection (CP) surveys other than close interval surveys (CIS) are not defined and recommended that reference to them be deleted. Panhandle noted that the year in which CP was initiated may be unknown, particularly for older pipelines. Panhandle also noted that ''selective seam'' is not a type of corrosion.

PHMSA response: We have eliminated the phrase ''or in contact with the ground''. We have clarified the questions pertaining to the types of cathodic protection surveys being conducted. Selective seam corrosion can be considered a ''type'' of corrosion in the sense that it manifests itself in a fairly distinct fashion, similar to other choices under this question.

Internal corrosion: INGAA and Panhandle noted that the questions relate to operator practices rather than the cause of the incident. They suggested these questions be replaced with the results of a visual inspection, the type of corrosion, and whether the commodity was ''corrosive gas.'' Paiute/Southwest suggested that some questions could be relocated to a ''general'' section, eliminating some duplication within the form. Paiute/Southwest also suggested that information on the assessment history be collected. NAPSR suggested adding questions to determine whether corrosion coupons were used and the location of the corrosion failure. MidAmerican stated that it was unclear what was meant by ''cleaning/dewatering pigs (or other operations) routinely utilized.''

PHMSA response: Questions relating to visual inspection, type of corrosion, and other contributory factors (like location of corrosion) have been added. A question was also added pertaining to whether corrosion coupons were used. Questions pertaining to operator practices have been retained because PHMSA believes it is important to have a general understanding of the basic preventive measures which were in place prior to the incident occurring.

Part F, F2—Natural Force Damage

High winds: INGAA and Panhandle suggested limiting this question to damage directly caused by high winds rather than including secondary damage such as barges that may have been moved by high winds to impact the pipeline. They contended this latter type of incident should be considered mechanical damage. INGAA and Panhandle also suggested eliminating the question as to whether the high winds were associated with a severe weather event (*e.g.,* hurricane, tornado) as it is too subjective. NAPSR suggested creating a separate sub-category for natural or forest fires and eliminating the sub-question regarding these under the temperature sub-cause.

PHMSA response: PHMSA has modified the question to capture only incidents directly associated with High Winds, placing secondary damage such as may be caused by drifting barges under ''Other Outside Force Damage'' as suggested. Questions associated with Forest Fires are now segregated so that those associated with Lightning are associated with Natural Force Damage and those which are man-made are associated with ''Other Outside Force Damage''. PHMSA has retained the question concerning severe weather events. This question simply asks if the high winds were associated with such an event. If so, operators are asked to identify the type of event (hurricane, tropical storm, tornado, or other). Damage occurring during Hurricane Katrina was extensive. It has been necessary to exclude from analyses reported property damage from incidents that occurred in 2005 so that the outlier magnitude of these damages did not skew the analytical results. In doing so, however, some non-Katrina damages have also been excluded, because PHMSA had no means of identifying which damages were from Katrina-related causes. The Katrina experience demonstrates that it can be necessary to treat severe event-related damages separately, and PHMSA considers it appropriate to collect this data.

Temperature: Paiute commented favorably on treatment of forest fires under ''temperature'' but asked if it would apply to fires caused by arson.

PHMSA response: Man-made fires, even if forest fires, would be reported under F4, Other Outside Force Damage—Nearby Industrial, Man-made, or other Fire/Explosion as Primary Cause of Incident. Arson which actually takes place on the site of a pipeline facility would also fall under F4, but would be considered ''Intentional Damage''. Naturally-occurring forest fires caused (most probably) by lightning would be captured under F2, Natural Force Damage.

Part F, F3—Excavation Damage

Excavation damage: Several commenters suggested changes to the additional information sought for incidents caused by excavation damage. INGAA suggested that most of the questions be deleted, because they are more appropriate for research than for incident reporting. Among the suggested changes were:

• Deleting unknown/other as a choice for location, since operators should know the location.
• Deleting the damage location entirely.
• Increasing the number of potential locations to include rights of way on public lands.
• Deleting the question as to whether the pipeline operator belonged to a one-call system.
• Deleting information as to whether one-call was notified.
• Requiring detailed information concerning the one-call notification.
• Requiring additional information about the interaction between the pipeline operator and those making one-call requests.
• Clarifying the information required for utilities in common trenches.
• Clarifying that the name of excavator is a company name vs. an individual or deleting the requirement to report the name.
• Deleting the requirement to provide the name of the excavator.
• Rearranging the form.
• Deleting the question as to whether permanent pipeline markings were visible.
• Eliminating the questions concerning whether the excavator incurred downtime and whether the excavation had been ongoing for more than one month.
• Deferring to the Common Ground Alliance's Damage Information Reporting Tool (DIRT).
• Deleting information about circumstances over which the operator had no control.
• Deleting the question about whether notification of excavation had been received, because excavators are required to notify.
• Deleting the type of excavator and work performed.
• Deleting the type of locator.
• Deleting the owner of an easement.
• Deleting whether a pipeline was located in a common trench with other facilities.
• Requiring only mandatory DIRT fields or requiring reporting via DIRT rather than duplicating their reporting requirements.
• Allowing space to enter a description where the answer is ''other''.
• Eliminating perceived duplication.
• Adding additional questions concerning vehicular damage events.

PHMSA response: The Common Ground Alliance (CGA) is the recognized authority for preventing excavation damage of underground utilities. The CGA has determined the information necessary to evaluate excavation damage trends via its DIRT system. PHMSA has adopted in this form the fields defined within the DIRT system as mandatory. Collecting information on excavation damage consistent with DIRT will allow for thorough analyses to identify trends related to excavation damage. It will also allow comparative analyses to consider information reported to DIRT by other underground utility operators, thereby expanding the database and potentially affording additional insights.

Part F, F4—Other Outside Force Damage

Fishing: INGAA and Panhandle recommended deleting the check box for fishing or other marine activity not related to excavation, contending that it is adequately addressed as damage by a vehicle.

PHMSA response: PHMSA wishes to maintain this basic distinction between land-based and maritime causes to evaluate the need, if any, for additional regulations or advisories and to coordinate regulatory or advisory activities with the other Federal agencies with jurisdiction over pipeline facilities located in navigable waters, such as the U.S. Coast Guard.

Previous damage: INGAA and Panhandle suggested that the question concerning failure due to prior damage be revised to refer to prior ''mechanical'' damage. Paiute/Southwest suggested that this question seems to presume that the portion of the pipeline involved was covered by integrity management requirements (presumably because assessment/examination would be required for such portions).

PHMSA response: We have revised the item to include ''mechanical'' damage. As far as the presumption of coverage under an IMP, operators are not precluded from taking basic preventive measures such as those shown anywhere on their pipeline systems. PHMSA is interested in any such preventive measures which may have been undertaken preceding an incident.

Additional questions: INGAA commented that the additional data related to hydrostatic tests, direct assessment, and non-destructive evaluation are not justified by the small number of incidents from this cause and should be deleted. Columbia agreed that many questions appear to seek general data, appropriate for an investigation but which is not related to a specific incident.

PHMSA response: PHMSA disagrees and has retained the questions pertaining to the data identified by the commenters, *i.e.,* the use of prior hydrotesting, direct assessment, or non-destructive evaluations, as such information is important to furthering the agency's general understanding of the efficacy of these basic preventive measures.

Electrical arcing: NAPSR suggested adding electrical arcing from adjacent facility.

PHMSA response: We have added this under ''Other Outside Force Damage''.

Fire-first events: Nicor suggested that this category be deleted as such events should only be reported if additional damage due to the gas release exceeds reporting criteria. Paiute/Southwest questioned if this category is appropriate for reporting incidents initiated by fires caused by arson.

PHMSA response: Changes to this form do not modify the reporting criteria in 49 CFR 191.15, and PHMSA agrees that no incident report need be filed unless those criteria are met. Experience has demonstrated, however, that pre-existing fires have caused damage to pipeline systems that subsequently resulted in damages exceeding the reporting criteria. Two categories of Fire-related causes have been retained—one for man-made fires under ''Other Outside Force Damage'' and one for lightning-caused fires under ''Natural Forces''. Both of these causes have occurred in the past.

Damage by vehicles: Paiute/Southwest suggested that the question implies a need for vehicle barriers. Paiute/Southwest further noted that there are parameters relevant to a complete understanding of vehicle-impact events that will be unknown to pipeline operators.

PHMSA response: As with fire-first events, analysis of pipeline incident data has shown that incidents caused by vehicle impacts are a small but significant percentage of all incidents. Again, PHMSA is not attempting to regulate the operation of vehicles near pipelines, nor is it implying that a vehicle barrier was needed. Therefore, we have removed the questions pertaining to impact barriers.

Prior examinations: Panhandle concluded that the information requested concerning prior assessments or non-destructive examinations was not needed. They noted that there are very few incidents in this category and that the data will thus be of limited, if any, use. They contended that PHMSA can collect the information as part of an investigation.

PHMSA response: PHMSA disagrees and has retained the questions pertaining to the data identified by the commenters, *i.e.,* the use of prior hydrotesting, direct assessment, or non-destructive evaluations, as such

information is important to furthering the agency's general understanding of the efficacy of these basic preventive measures.

Part F, F5—Material and/or Weld Failure

Assessment history: Paiute/Southwest reiterated its concern (*see* F4 above) that this section presumes the involved pipeline segment was covered by integrity management requirements.

PHMSA response: There is no such presumption. This section asks whether certain assessments or examinations were performed. Integrity management requirements are one reason why they may have been performed, but some pipeline operators also conduct such evaluations as a prudent preventive measure on their own volition even if not explicitly required by the regulations, and whether the pipeline is in an HCA or not. Understanding whether failures occur despite examinations intended to identify incipient failures can be important to future evaluations of the effectiveness of such measures and whether additional assessment or inspection requirements are needed.

Reporting basis: INGAA and Panhandle suggested deleting the first question, which asks the basis on which the subsequent information was developed. They noted that this information is not needed for trending and that subsequent completion of metallurgical examinations or investigations could lead to a need to file a supplemental report to change the response to this question even though the relevant information does not change.

PHMSA response: Though not needed for trending, it is important information that supports the merits of the reported findings, and it is important for PHMSA to understand the veracity of the reported data, especially in these cases where a highly technical mechanism may be involved.

Environmental cracking: INGAA and Panhandle suggested that questions related to environmental cracking, fatigue and stress should be moved to another section, because they do not relate to material failures.

PHMSA response: These new cause sub-categories align more closely with this primary incident cause than any of the others, and because PHMSA did not wish to create a new primary category, they were placed here, but in such a way that they may be segregated for separate analyses.

Additional questions: INGAA reiterated its objection (*see* F4 above) to including additional questions concerning hydrostatic testing and assessment methods. Columbia again supported those objections.

PHMSA response: PHMSA disagrees and has retained the questions pertaining to prior hydrotesting testing. This information is important to the agency's general understanding of the efficacy of these basic preventive efforts.

Supplemental report required: For incidents still under investigation, the form noted that a supplemental incident report was required. NAPSR suggested modifying the form to require that this report be submitted within one year.

PHMSA response: The regulation requires supplemental reports, as deemed necessary, when additional relevant information is obtained. The regulation does not, however, specify a maximum time frame in which such reports must be submitted. PHMSA cannot use this change in the incident report form to impose such a requirement. PHMSA will modify the instructions to state its preference that supplemental reports addressing additional investigation be submitted within one year of filing the initial incident report.

Prior examinations: Panhandle again commented that the information requested concerning prior assessments or non-destructive examinations was not needed. They noted that this was the third time this information was requested, and that the question concerning hydrostatic tests discounts the importance of the original hydrostatic test.

PHMSA response: PHMSA has already responded to this thread of comments on the importance of obtaining information on prior tests, such as hydrotesting or direct assessment conducted on the failed pipeline segment prior to incident occurrence.

Part F, F6—Equipment

General: IUB suggested that the form require that a description of the failure be included in the narrative provided in Part G.

PHMSA response: A description of the failure mechanism, secondary and contributory causes, and any other factors deemed important to understanding the incident can always be included in Part G. PHMSA saw no reason why this particular incident cause should be separately identified as requiring additional explanation.

Malfunction of control/relief equipment: INGAA and Panhandle suggested that the form allow for multiple selections and that separate selections be allowed for regulators and control valves. Similarly, Columbia noted that block and check valves serve different functions and should not be grouped together.

PHMSA response: These changes were accepted and incorporated.

Compressors: INGAA and Panhandle commented that the question should be limited to compressors, which are part of the pipeline system, and should not include their drivers, which are not. Columbia suggested that additional data elements could be appropriate for compressors including, for example, emergency shutdown systems, relief valve and/or valve failure, pressure vessel failure, or pipe failure.

PHMSA response: We have eliminated motor-driver as a sub-cause, and adopted the additional sub-causes suggested by Columbia.

Connection failures: INGAA and Panhandle suggested that these be moved to another failure cause.

PHMSA response: The connections envisioned here would fall under ''Equipment'' as the primary incident cause.

Part F, F7—Incorrect Operation

General: INGAA and Panhandle commented that the elements in this section address what happened but do not cover causes, as is done on the current form. INGAA also noted that this section inappropriately implies that storage is separate from gas transmission and asks questions concerning overpressure that are duplicated elsewhere. INGAA suggested replacing the questions in this section with others largely drawn from the current form. Columbia and Nicor suggested that the term ''storage'' should be defined as it could be interpreted differently by different users. Panhandle suggested that storage be eliminated completely as it is a part of transmission and need not be called out separately.

PHMSA response: PHMSA believes the new sub-causes listed are more proximate to the incident occurrence than those included in the current form. The choices from the current form, however, have been added back in to address the concern that these important root causes were no longer being captured. In addition, PHMSA has added sub-causes to identify the factors involved in overpressurization of storage, a special case of overpressure that warrants the capture of this additional level of detail.

Part F, F8—Other Cause

Still under investigation: For incidents still under investigation, the form noted that a supplemental incident report was required. NAPSR suggested

modifying the form to require that this report be submitted within one year.

PHMSA response: The regulation requires supplemental reports, as deemed necessary, when additional relevant information is obtained. The regulation does not, however, specify a maximum time frame in which such reports must be submitted. PHMSA cannot use this change in the incident report form to impose such a requirement. PHMSA will modify the instructions to state its preference that supplemental reports addressing additional investigation be submitted within one year of filing the initial incident report.

Instructions for Incident Report Form PHMSA F 7100.2—Gas Transmission and Gathering Systems

PHMSA has revised the instructions to reflect changes made in the form and for editorial purposes based on the comments submitted. PHMSA also received the following specific comments on the instructions:

Duplication of the form: Many commenters noted that a large portion of the proposed instructions was duplicative of the information already provided on the incident reporting form and that such information could be deleted. These commenters also suggested that the instructions should only provide additional guidance, where needed, and that eliminating unnecessary or duplicative information would significantly shorten the instructions and make them more useful.

PHMSA response: PHMSA agrees and has deleted unnecessary duplication.

Reasonable effort: SoCal/SDG&E suggested that the instructions should specify that a reasonable effort should be expended to generate required estimates and that supplemental reports are only needed if reported estimates change significantly or if new information results in a change in reportable status of an incident.

PHMSA response: PHMSA generally agrees and has included appropriate guidance in the instructions.

Cost data: NAPSR suggested that additional guidance be provided for estimating costs associated with an accident, including the guidance published in advisory bulletin ADB–94–01. SoCal/SDG&E asked that the instructions specifically recognize that broad costs estimates are acceptable when specific costs cannot be readily determined.

PHMSA response: PHMSA agrees and has incorporated guidance from the advisory bulletin.

Contributing causes: IUB noted that section F instructs the operator to complete only one cause section, but that some incidents could have multiple contributing causes. IUB suggested that this situation be addressed in the instructions.

PHSMA response: Part F is intended to capture the principal cause of an incident and, as indicated in the instructions, operators can provide additional information in the narrative if they determine that contributing secondary causes were important. For these reasons, PHMSA does not believe any additional guidance is needed on this issue at this time.

Comments on Burden Estimate, Form F 7100.2, Incident Report—Gas Transmission and Gathering System

Burden Hour Estimate: SoCal/SDG&E, Paiute/Southwest, and Panhandle commented that the burden for completing the form (estimated at 7 hours) was significantly underestimated. Paiute/Southwest estimated that the burden may be between 12 and 30 hours. Panhandle estimated 52 hours. SoCal/SDG&E suggested that the burden could be reduced by redefining the thresholds for reporting incidents.

PHMSA response: Even if completion of the form would require more than the seven hours estimated, the total burden of this information collection is still minimal. Operators need only complete the form if they have an incident. There are approximately 75 incidents annually on gas transmission and gathering systems. PHMSA considers that the value of this information for future analysis of incident trends and the factors that influence the occurrence of incidents justifies the information collection burden. The threshold for reporting incidents is defined in the regulations and no change to those regulations has been proposed. Changing the threshold is beyond the scope of this information collection request.

Incidents significant in operator's judgment: Section 191.3 defines an incident as an event that meets specified threshold criteria or ''is significant, in the judgment of the operator'' even though it did not meet those criteria. Paiute/Southwest requested that the form include guidance on PHMSA's policy and expectations for such reports and how they are to be submitted.

PHMSA response: PHMSA does not consider it appropriate to provide additional guidance for this requirement. Such guidance would likely become an additional de facto criterion and incidents of significance that do not conform to the guidance would likely not be reported. PHMSA does not want to imply that operators should not report any incident that they regard as significant, *i.e.,* that they conclude is of sufficient importance that the regulator should be notified. Such incidents are to be reported using Form F 7100.1 in the same manner as any other incident.

C. Incident Report Form PHMSA F 7000—1, Accident Report—Hazardous Liquid Pipeline Systems (Impacted Information Collection: OMB 2137–0047)

General Comments

Substitute form: API stated that the hazardous liquid pipeline industry would prefer that PHMSA adopt the form used for its Pipeline Performance Tracking System (PPTS). API noted that use of the same form would reduce the administrative burden on reporting utilities and that the industry has refined the PPTS form, over time, based on lessons learned from the data.

PHMSA response: PHMSA appreciates the value of API's PPTS and has sought to adopt its concepts, breakdowns, and terminology to the extent practicable. However, PHMSA cannot simply adopt the PPTS form for use by hazardous liquid pipeline operators. Indeed, doing so would frustrate PHMSA's objective of creating and maintaining consistency between and among the three types of accident and incident reporting forms.

Excessive change: API contended that the proposed ''revisions'' on control rooms and fatigue are so substantive in nature that they in effect create a new regulatory requirement for industry, that such action can only be done through the rulemaking process, and thus the proposal is inappropriate and beyond the scope of an ICR. For example, API contended that a fatigue investigation is required by the form for every accident, something that is not required by regulations at this time. As such, API stated those requirements do not meet the criterion of necessity for an ICR and are in violation of the Administrative Procedure Act requirement for notice and comment.

PHMSA response: PHMSA has the authority to request that the owners and operators of covered pipeline facilities submit information as needed to ensure compliance with the nation's pipeline safety laws. 49 U.S.C. 60117(b)(1)–(2). Indeed, hazardous liquid pipelines are a critical part of the nation's pipeline network and information on the accidents that affect those lines is vital to ensuring public safety. Congress has

also directed PHMSA to amend its accident and incident reporting forms to require that operators provide data related to controller fatigue, Pipeline Inspection, Protection and Safety Act (PIPES Act) of 2006, Public Law 109–468, section 20, 120 Stat. 3498 (Dec. 29, 2006), and the agency is coordinating its efforts to execute that mandate with its pending rulemaking on control room management. These authorities provide ample support for all of the information sought in the proposed revision to the accident reporting form without notice-and-comment rulemaking or further delay.

Nevertheless, PHMSA has significantly reduced the level of detail required to complete the form, particularly in the area of controller fatigue, and positive answers to the remaining questions will provide information indicating that further investigation of potential fatigue issues may be warranted.

Unnecessary information: API is concerned about the addition of data elements that will not add value to analysis of accident trends. For example, they noted that reporting the method by which MOP was determined is likely to require additional research (and associated burden) while it will not provide a commensurate benefit.

PHMSA response: PHMSA agrees and has eliminated the proposed element for reporting the method by which MOP was determined.

Short form: API noted that elimination of the short form (previously used for small releases) resulted in a significant increase in burden for reporting accidents involving minimal impact on the environment. They noted that many questions on the replacement form would not be relevant for a small release and that requiring completion of that form for all releases thus is a significant and unjustified increase in reporting burden. API submitted a revised version of the short form as part of their comments. API also noted that information on PHMSA's Web site concerning accident experience focuses on larger releases. API questioned whether PHMSA will use the data collected for smaller releases, for which the short form was previously used, to improve its safety programs.

PHMSA response: PHMSA will retain the short form for the same types of smaller releases as was done in the past.

Unknown cause: The Pipeline Safety Trust noted its conclusion that too many accidents have been attributed to an ''unknown'' cause. For that reason, the Trust recommended that PHMSA require that any report with the cause listed as ''unknown'' remain open and be updated every 60 days until a cause is determined or PHMSA concludes that all information has been provided and there is no way to determine a cause.

PHMSA response: PHMSA has concluded that many incidents were previously reported as ''unknown'' or ''other'' because the apparent causes did not fit cause categories on the incident report form. PHMSA expanded the number of sub-cause categories in its previous revision and has seen a decrease in the number of unknown/other reports. PHMSA has added additional sub-cause categories in this revision to attempt to further reduce the number of such reports. PHMSA will monitor incidents reported as ''unknown'' and will investigate as appropriate.

Reporting threshold: The Pipeline Safety Trust noted that Alaska's criteria for reporting hazardous liquid releases are more conservative than those used by PHMSA.

PHMSA response: The criteria defining an incident are established in regulation and a rule change would be needed to change them. Such an action is beyond the scope of this request.

Part A, Key Report Information

Question 2, name of operator: API suggested that the on-line reporting system automatically complete this field based on the entered operator ID, noting that this would reduce potential errors.

PHMSA response: PHMSA agrees and will implement this enhancement.

Question 4, location: NAPSR suggested that location be reported by GPS coordinates, including identification of the relevant ''projection'' to better define the latitude and longitude information.

PHMSA response: Latitude and longitude were included by PHMSA in the last revision of this form. We did not include this information in the pending proposed revised form, but will restore the information to the final form. Industry comments on the previous revision expressed concern over requirements to specify a projection, stating that this information would not be available to many distribution pipeline operators and may be confusing. PHMSA elected at that time to omit a requirement that operators specify the projection used. Since PHMSA did not propose such a change in the September 4, 2009, notice, the requirement to report latitude and longitude is being retained as in the previous form, without a need to report projection.

Question 7, commodity spilled: API noted that the revised form adds a question concerning sulfur content of crude oil without any explanation as to why this information is needed. API contended that this information is not important to understanding an accident and that there may be proprietary or other reasons not to reveal this data. API suggested that this question be deleted unless it can be demonstrated that the information will contribute to understanding accidents or their consequences. API further suggested that the listed commodities for refined products and highly volatile liquids be grouped in a more logical fashion. NAPSR suggested that the definitions for sweet and sour crude be moved to the instructions, and also noted that the definitions leave it unclear how crude oil with between 0.5 and 2.5 percent sulfur is to be reported. The Pipeline Safety Trust also noted the gap between the concentrations designated sweet and sour.

PHMSA response: We have eliminated the ''sweet'' and ''sour'' subcategories under ''Crude'' because this information is of limited utility in ensuring public safety. This obviates the need to address the gap in options for percent sulfur. We have adjusted the commodity list and groupings as API suggested.

Question 7, biofuels: API commented that PHMSA has proposed collecting information concerning spills of biofuels (*i.e.,* ethanol and biodiesel) but that the form does not provide for identification of these commodities. In fact, they noted that the form refers to 49 CFR 195.50 as the regulatory basis for required reporting and that this section does not refer to biofuels.

PHMSA response: Section 195.50 requires reporting of accidents involving ''a release of * * * hazardous liquid or carbon dioxide'' meeting certain criteria. Hazardous liquid is defined in 49 CFR 195.3 to include all petroleum products. PHMSA's policy for regulating transport of biofuels by pipeline was described in a policy statement published August 10, 2007 (72 FR 45002). As described more fully in that statement, any blend of biofuels with petroleum products is considered subject to the existing regulations in Part 195, including § 195.50, under the definition in § 195.3. The policy statement also notes that the statutory definition of hazardous liquids includes petroleum or petroleum products and ''a substance the Secretary of Transportation decides may pose an unreasonable risk to life or property.'' The policy statement goes on to explain why the Secretary has determined that ethanol is a substance that may pose an unreasonable risk to life or property. Thus, accidents involving release of

ethanol or ethanol blends must be reported under 49 CFR 195.50. The policy statement does not explicitly address unblended biodiesel. Reporting of accidents involving pure biodiesel transported by pipelines would not be required under current pipeline safety regulations, although operators could report such releases voluntarily. PHMSA has revised the form to include biofuels and biofuels blends.

Question 8, unit of measure: API commented that use of two units of measure (barrels and gallons) has caused confusion. API suggested that data be reported only in barrels. API further suggested that if PHMSA continues to request gallons for spills of less than one barrel, that the on-line data entry should include a validation check that will prevent the use of gallons for spills of more than 41 gallons. API suggested that, in either event, data entry must allow the use of two decimal places.

PHMSA response: We have modified the form to accept only barrels as the unit of measure, and to allow for the use of two decimal places.

Questions 9 and 10, volume spilled and recovered: API commented that it is important that these questions indicate that the reported volumes are expected to be estimates.

PHMSA response: We have added the word ''estimated'' to each item on the form, and the instructions will also reflect this expectation.

Question 13: NAPSR suggested that this question be modified to collect the date and time of any shutdown. The Pipeline Safety Trust also suggested that an option be provided to indicate that the pipeline is still shut down, since a shutdown may extend beyond the time at which the written report must be filed.

PHMSA response: We have incorporated both of these suggestions.

Question 17, response time: API objected to the proposed restructuring of this sentence (to Elapsed Time from Operator's Awareness of Accident to Arrival of Operator Personnel on Site). They commented that ''awareness'' is too vague. They noted that response personnel may be a contracted oil spill response organization, as allowed by 49 CFR 194.115. They also noted that mitigating actions can begin before response personnel arrive on site, such as via SCADA commands. NAPSR suggested that this question be revised to collect a time sequence of key events such as when the operator was notified, when operator personnel arrived on site, and when the area was made safe. Other commenters noted that the form and instructions were not consistent for this question.

PHSMA response: We have revised this question to request a time sequence as NAPSR suggested. We have made a similar change to the other incident/accident report forms. We have also revised the time line elements to clarify our intent.

Part B, Additional Location Information

Question 21, nearest address: API noted that determining a valid address can be difficult for rural locations. They further noted that the latitude and longitude information reported in question 4 will adequately describe the location of an accident and suggested that question 21.a be deleted.

PHMSA response: PHMSA agrees and has deleted the nearest address information from the form.

Question 22, location: NAPSR suggested adding elements for locations between station designations, segment ID, and pipeline name.

PHMSA response: Segment ID and Pipeline name have been added. PHMSA considers that ''between stations'' information is not needed because the Milepost, Valve, or Station number is already requested.

Question 23, Federal lands: The Pipeline Safety Trust questioned why lands in National Parks are excluded from categorization as Federal lands.

PHMSA response: This question identifies accidents that occur on pipeline rights-of-way on Federal lands authorized pursuant to 30 U.S.C. 185, and National Parks are specifically excluded from that statute.

Question 24, location: API suggested that this question refer to the location of the accident as opposed to the location of a failure. API also suggested that some of this information be relocated. In particular, they suggested that information concerning whether the incident occurred in a pipeline segment that had been identified as able to affect a high consequence area be moved to Part D, where consequences are addressed. They also suggested that questions concerning crossings (*i.e.*, bridge, rail, and road) be presented in a separate question uniquely devoted to crossings. Finally, they would have clarified that reported water depth for accidents that occur in a body of water is expected to be approximate, since depth can vary over time. NAPSR suggested capturing the name of any body of water. The Pipeline Safety Trust suggested that an additional option was needed for water bodies to reflect those that are intermittent/ephemeral.

PHMSA response: PHMSA has adopted all of these recommendations with the exception of the last one. PHMSA concludes that recognized bodies of water will include these types of intermittent/ephemeral water flows, at least those of significance to pipeline safety.

Question 26, origin in State waters: NAPSR suggested that area, block/track number, and nearest county be required for incidents originating in State waters.

PHMSA response: PHMSA has incorporated these suggestions.

Question 27, area of failure: API again requested that the form refer to accident as opposed to failure. They also suggested a restructuring of the data elements to separate onshore from offshore and reduce the need to report as ''other.'' NAPSR suggested adding a space for operators to describe the water, building, or space. The Pipeline Safety Trust questioned the element for above ground but under pavement.

PHMSA response: We have incorporated these suggestions.

Part C, Additional Facility Information

Question 28, pipeline function: API noted that ''gathering'' and ''transmission'' are pipeline types and that the presence in this question of choices for tanks and facility piping could be confusing. They suggested that these additional elements be moved. They also noted that only gathering is defined in Part 195 and they suggested that the choices here should thus be ''gathering'' and ''trunkline/transmission.''

PHMSA response: We have incorporated these suggestions.

Question 30, distance between valves: API requested that elements 30 (d) and (e) be removed. They noted that the distance between valves cannot be used to infer adequate protection without knowledge of a number of other pipeline factors, and that this issue had been previously addressed through rulemaking. They are concerned that reporting of this data will create a temptation to make meaningless comparisons and conclusions.

PHMSA response: PHMSA agrees with API that the information in parts (d) and (e) of this question would not be useful without the knowledge of a number of other factors and has removed these elements.

Question 31, item involved: API suggested addition of items and modification of others to make data entry easier and reduce reporting as ''other.''

PHMSA response: PHMSA has made the suggested changes.

Question 34, type of failure: API expressed concern that reference to the type of ''separation'' could create

confusion as it implies failure of a seam. They suggested that this question, instead, refer to the orientation of a failure as generally longitudinal or circumferential.

PHMSA response: PHMSA has made the suggested changes.

Part D, Additional Consequence Information

Environmental impacts: API commented that PHMSA had not included the information that was in section F.2 of the previous form on environmental impacts. Instead, API contended that PHMSA was collecting environmental impact data only for those accidents for which the release affects a high consequence area. API strongly encouraged PHMSA to continue to collect environmental impact data on all accidents.

PHMSA response: PHMSA agrees and restored these elements.

Question 35, high consequence areas: NAPSR suggested combining all of the elements for spilled commodity affecting HCAs into one question and including commodity recovered. NAPSR also suggested adding a question on whether animals or other species were affected. API recommended that questions pertaining to the amount of commodity released and recovered in an HCA be deleted. They expressed concern that this reporting could create confusion and result in multiple counting of released volume.

PHMSA response: Questions pertaining to affected animals or other species were added. The questions pertaining to volume spilled and recovered have been eliminated.

Question 36, costs: API suggested that this question acknowledge that the reported amounts are expected to be estimates. API also suggested restoring the word ''reimbursed'' and adding the word ''paid'' to the category on public or private property damages and adding an element for ''other'' costs. NAPSR suggested capturing costs separately for facilities directly and indirectly affected. NAPSR also suggested additional elements to capture costs related to business interruption (*e.g.*, lost sales, tariffs, line down time). The Pipeline Safety Trust suggested that PHMSA needs to specify the price to be used to estimate the cost of lost commodity.

PHMSA response: API's suggestions have been incorporated. PHMSA believes that trying to segregate direct effects vs. indirect effects would introduce a significant element of complexity and confusion, and would not add any analytical value to the data. Also, business interruption impacts involve proprietary information which could not be revealed. The price of the commodity to be used in these estimates is highly variable and location-dependent, so it would not be feasible for PHMSA to try to specify the values to be used in all situations.

Part E, Additional Operating Information

Question 37, special regulatory treatment: API requested that this question be deleted. They questioned whether the fact that a pipeline was operating under any of the listed regulatory authorizations/restrictions at the time of an accident adds any useful information for accident analysis and trending.

PHMSA response: PHMSA has deleted this question.

Question 39, MOP: API questioned the usefulness of this information to accident analysis and suggested that the method used to determine MOP only be asked for accidents resulting from overpressurization.

PHMSA response: We reconsidered the need for this information. Experience has shown that an error in calculating MOP is rarely, if ever, relevant in determining the cause of an accident. It has also shown that such information can be more efficiently and effectively gathered during the course of an accident investigation. For these reasons, PHMSA has eliminated this question.

Question 40, overpressurization: The Pipeline Safety Trust suggested that additional information is needed concerning overpressurizations that may have been experienced in the year preceding the accident and that PHMSA should ask explicitly if the operator believes that overpressurization played a factor in contributing to the accident.

PHMSA response: Part E includes questions that ask the estimated pressure at the point of the incident, the MAOP, and the range of potential overpressure. In addition, operators would report overpressurization as the cause of an incident in Part F. PHMSA considers this sufficient information concerning potential overpressure events. This report is intended to collect information concerning an incident, and it would be inappropriate to include questions that address past operations (*e.g.,* overpressure experiences in the preceding year). Historical operating experience that might indicate a systemic problem related to an incident would be appropriate for examination during a post-incident investigation, but such investigations are not the subject of this form.

Question 42, initial detection: API noted that the definition of controller in the pending proposed rule was too expansive and suggested that reporting here be limited to controllers as defined in API–RP–1168. They also suggested additional changes to prevent confusion within the industry.

PHMSA response: The definition of controller in the rulemaking identified by API is not at issue in this information collection request. However, PHMSA has made the additional changes API suggested.

Questions 44–57, fatigue: API objected to inclusion of these questions, noting that a rulemaking addressing this subject is still in progress. API suggested revisions and deletions to individual questions in the event PHMSA did not agree to delete them all. The suggested changes would eliminate questions that API considers subjective (*e.g.,* whether a supervisor thought a controller was fatigued) and would reorganize questions to what API perceives as a more logical relationship. The Pipeline Safety Trust noted that question 44 does not seem to allow for the option of a determination that a controller did not cause or contribute to the accident.

PHMSA response: Consistent with a recommendation made by NTSB, Congress ordered PHMSA to obtain specific data from owners and operators on the role of controller fatigue in incidents reporting forms. Pipeline Inspection, Protection and Safety Act (PIPES Act) of 2006, Public Law 109–468, § 20, 120 Stat. 3498 (December 29, 2006). Nonetheless, PHMSA has reduced the amount of information required by these questions. The revisions allow for reporting that the facility was not monitored by controllers or that the operator determined that a review of controller actions was not needed. The revised form also allows for reporting review results that determined there were no control room/controller issues. PHMSA considers that this is the minimum information for it to satisfy the statutory requirement.

Question 58, drug and alcohol testing: API requested that this question be deleted. They contended that it provides no useful information for accident analysis and is related only to compliance. The Pipeline Safety Trust suggested that this question be expanded to include other covered employees. The Trust also suggested that operators be required to state their basis for concluding that drug and alcohol testing was not necessary, if that is the case, and to report information concerning the tests and results if tests were administered.

PHMSA response: Whether any operator or contractor employees were tested under DOT's post-accident requirements—and if so, how many failed—would be pertinent for any accident report. This determination provides information related to potential contributing causes. The form has been modified to require that the number of persons who failed a post-accident test, and the number that did not fail, be reported. PHMSA does not consider it appropriate to require operators to state a basis for not testing. That basis would be subject to PHMSA's review under our accident investigation process.

Integrity management and testing: NAPSR suggested that a new section be added to the end of part E to collect information concerning integrity management assessments and testing that is now addressed in several other portions of the form.

PHMSA response: Questions concerning pipeline assessment occur in multiple sections of Part F. Operators only complete one section of Part F, depending on the cause of the accident. Accordingly, the assessment questions do not result in duplication of effort. In fact, operators need not provide assessment information for causes for which assessment is not relevant. PHMSA considers it appropriate to ask these questions as part of the information related to causes for which assessment may be relevant. PHMSA has thus not collected these questions into a new section.

Part F, Cause Information

Part F, F1—Corrosion

Type of corrosion: API noted that more than one issue may be causing corrosion and suggested that the form allow for selection of multiple elements to accommodate this possibility. For internal corrosion, NAPSR suggested a question be added asking whether coupons were used.

PHMSA response: We have incorporated the suggested changes.

Cathodic protection surveys: API suggested that reference to close interval survey (CIS) or other cathodic protection surveys should be revised to refer to cathodic protection surveys of any type, thereby reducing the apparent importance placed on CIS.

PHMSA response: We have expanded and clarified the questions.

Non-destructive examinations (NDE) and assessments: API noted that the most recent NDE for many pipelines would have been done at the time of construction and that these records may be difficult to access. Accordingly, requesting information about these exams could pose significant burdens. API suggested that this data element be limited to examinations conducted since the integrity management regulations became effective at the end of 2001. According to API, this would reduce the burden to retrieve this information and would make it more useful, since reported information would reflect examination of the pipe in service instead of at initial construction. API also requested that the distinction between high resolution and standard resolution magnetic flux leakage (MFL) tools be clarified or the need to report each separately be eliminated. This comment was also made for other sections of part F.

PHMSA response: PHMSA agrees that recent NDE experience is of interest and that the effort to retrieve construction data is not necessary. We have modified the form to request NDE-related information only if an operator has performed an examination since 2001. PHMSA has also eliminated the need to differentiate between standard- and high-resolution MFL tools.

Part F, F2—Natural Forces

Thermal stress: API suggested that guidance is needed concerning the meaning and use of this term.

PHMSA response: We will revise the instructions to include guidance in this area.

High winds: API recommended that the instructions emphasize that damage from ''wind- or weather-induced contact by debris or boats, barges, anchors, drilling rigs, or other objects'' should be reported in this category rather than similar categories in F3 or F4.

PHMSA response: A similar question was included on the draft Gas Transmission/Gathering form. Comments submitted concerning that form suggested that secondary impacts (*i.e.*, impact from boats, barges, *etc.* that might be moved by high winds) be reported as ''Other Outside Force Damage.'' PHMSA desires to maintain consistency among the forms as to how accident data is collected, as this will facilitate future analysis. PHMSA has modified this question to capture only incidents directly associated with High Winds, placing secondary damage such as may be caused by drifting barges under ''Other Outside Force Damage'' as INGAA suggested. PHMSA will ensure that guidance for reporting secondary impacts is included in the instructions.

Natural fire: API suggested eliminating reference to natural fires under temperature. They noted that a natural fire (*e.g.,* forest fire) would likely be caused by lightning, which is a separate element in this part, and that its treatment under temperature is confusing. NAPSR suggested making forest fires a separate sub-cause.

PHMSA response: PHMSA agrees and has revised the form to collect information concerning accidents caused by fires initiated by lightning damage. Accidents resulting from man-made fires would be reported under F4, other outside force damage.

Part F, F3—Excavation Damage

Location: NAPSR suggested deleting ''unknown'' under damage location, since operators should know where the damage occurred.

PHMSA response: PHMSA generally includes ''unknown'' or ''other'' in data elements where operators select among available options. PHMSA agrees that operators should most likely be able to select an element from the list provided here, but has continued to provide an ''unknown/other'' option for any situations in which the choices provided are not sufficient.

Damage Information Reporting Tool (DIRT): API noted that the proposed form adopted many of the data elements used by the Common Ground Alliance in its DIRT system, in lieu of the information previously required for excavation damage incidents. API recommended that this change not be made. API reported its own experience with DIRT for consideration by PHMSA in case PHMSA did not agree to return to the excavation damage information previously required. API noted that it has modified its PPTS system to collect the data used in the DIRT system and that it then uploads that data directly to DIRT for all events reported to PPTS. API noted that requiring this information to be submitted to PHMSA would represent unnecessary duplication unless PHMSA also agrees to provide this information to DIRT, in which case API would cease collecting this data for PPTS. API recommended that PHMSA collect only that data identified in DIRT as mandatory. NAPSR suggested additional data elements for inclusion.

PHMSA response: The Common Ground Alliance (CGA) is the recognized authority for preventing excavation damage of underground utilities. The CGA has determined the information necessary to evaluate excavation damage trends via its DIRT system. PHMSA has adopted in this form the fields defined within the DIRT system as mandatory. Collecting information on excavation damage consistent with DIRT will allow for thorough analyses to identify trends related to excavation damage. It will

also allow comparative analyses to consider information reported to DIRT by other underground utility operators, thereby expanding the database and potentially affording additional insights.

Part F, F4—Other Outside Force Damage

Vehicular damage: API suggested that the element concerning damage by a vehicle or other equipment be modified to include damage by the operator or its contractor. NAPSR suggested adding sub-elements to identify if barriers were in place, the distance between the roadway and the facility, and the location of damaged facilities.

PHMSA response: PHMSA modified this question to collect information as to whether the vehicle was operated by operator or operator contractor personnel. PHMSA did not include questions concerning vehicle barriers. Experience shows that unique circumstances are often involved in vehicle-damage accidents, making it difficult to develop a uniform set of questions that would collect the appropriate information in all cases. The presence and location of vehicle barriers is more appropriately addressed as part of an accident investigation.

Assessment: API questioned the value of collecting data on when inspection tools were run, noting that damage could have occurred subsequent to an inspection. API suggested that this element be replaced with a question asking whether the operator has reason to believe that its most recent internal inspection was completed prior to the damage being sustained.

PHMSA response: We have added the question API suggested. PHMSA also has retained the questions concerning when tools were run. PHMSA recognizes that damage could have occurred subsequent to the last tool run, but it is also possible that damage went unrecognized as a result of the type of tool used or for other reasons. PHMSA considers it important to collect information which can be used to help identify whether assessment requirements are being effective in preventing accidents from latent outside force damage.

Prior damage: API noted that the instructions should explicitly state that this section is to be completed for accidents resulting from prior excavation damage. They further suggested that a question be added as to whether the prior damage resulted from excavation. API again suggested that the questions related to assessments be limited to assessments/inspections conducted since the effective date of integrity management regulations.

PHMSA response: PHMSA added the word ''mechanical'' to damage, which is more accurate than stating ''excavation'' damage. PHMSA also added a question as to whether the prior damage resulted from excavation. PHMSA did not limit the questions to those assessments conducted since the effective date of the integrity management regulations because these sorts of preventive assessments may well have taken place prior to and without regard to whether they were required by regulations.

Part F, F5—Material and/or Weld Failure

Title: API noted that this redesigned section caused considerable confusion among its members. They suggested that the section be retitled ''material failure of pipe or weld'' which they believe will resolve the confusion.

PHMSA response: PHMSA has made the suggested change.

Multiple causes: API suggested that the section on cause should include more options and should allow for multiple to be selected (*i.e.,* check all that apply).

PHMSA response: PHMSA agrees and has revised the form to indicate that multiple choices can be made.

Failure drivers: API noted that the distinction between construction and original defect is not clear. They also noted that fatigue or vibration would be a factor that would drive a construction-related or other incipient defect to failure, rather than being a cause unto itself. API suggested a restructuring to reflect this relationship.

PHMSA response: PHMSA has revised the form to indicate that sub-causes are construction-related or original *manufacturing* defects. PHMSA has also reorganized the form to collect information on the subsequent mechanism that likely drove one of these defects to failure.

Part F, F6—Equipment Failure

Failure methods: API indicated that the hazardous liquid pipeline industry is working hard to understand equipment failure problems. They suggested that additional data in this section would be useful, and provided an expanded list of failure methods to be included.

PHMSA response: PHMSA has revised the form to incorporate API's suggestions.

Pump failure: API noted that a motor failure cannot, alone, cause a release from a pump. API suggested that the sub-questions for this element be limited to body failure, crack in body, and appurtenance failure.

PHMSA response: PHMSA agrees and has modified the sub-questions accordingly.

Part F, F7—Incorrect Operation

Revisions: API suggested a different set of questions for this section, to better understand the causes of incorrect operation.

PHMSA response: PHMSA has incorporated the API-suggested questions.

Instructions for Form 7000–1, Accident Report—Hazardous Liquid Pipeline Systems

Inadequate instructions: API commented that the proposed instructions were inadequate, consisting for the most part of information duplicated from the form. API concluded that the extensive changes to the form, plus its applicability to operators of low-stress and rural gathering pipelines not previously subject to the regulations makes it imperative that good and thorough instructions be provided. API prepared and submitted a proposed draft set of instructions as part of their comments.

PHMSA response: PHMSA will revise the instructions to provide more guidance and to minimize repetition of information from the form.

Zero as a placeholder: The draft form instructed operators to enter unknown for text fields and ''0'' for numeric fields where information is unavailable. API suggested that numeric fields for which information is not available should be left blank. They noted that zero can be interpreted as actual data and that this will distort subsequent analyses.

PHMSA response: PHMSA agrees and will revise the instructions to so indicate.

Required fields: API noted that there is no indication on the draft form as to which fields are required. They also commented that the on-line data entry option does not indicate which fields are required until after data entry has been completed.

PHMSA response: PHMSA has held several discussions with Trade Association teams on general form design. Feedback from various stakeholders will be taken into account for both hard copy and electronic form design, including consideration of which fields are required for both instances.

Volume recovered: API requested that the instructions include guidance for estimating the amount of a spill that is recovered.

PHMSA response: PHMSA will include such guidance in instructions.

Guidance on costs: API requested that the instructions include explicit guidance for how costs related to an accident are to be estimated. The proposed instructions API submitted included such guidance.

PHMSA response: PHMSA will include such guidance in instructions.

Conflicts with regulations: The Pipeline Safety Trust suggested that there were conflicts between the instructions and the regulations concerning the definition of highly volatile liquids and treatment of natural gas liquids.

PHMSA response: PHMSA will address conflicts between the instructions and the regulations concerning the definition of highly volatile liquids and treatment of natural gas liquids in revisions to instructions that will be posted in the docket at time of publication of this r notice.

Fatality: The Pipeline Safety Trust objected to the instructions that a fatality occurring more than 30 days after an accident as a result of an injury incurred from the accident should be reported as an injury. They contended that all fatalities resulting from an accident should be reported as a fatality.

PHMSA response: This distinction is standard DOT practice. PHMSA acknowledges the logic behind attributing any resulting fatality to an accident, but there are practical difficulties in doing so. Accidents may result in injuries that subsequently contribute to death, sometimes long after the injury occurs. PHMSA cannot require pipeline operators to maintain contact with injury victims so that they will be aware of subsequent deaths and can modify incident reports accordingly. Thus, it is necessary to have some practical time limit in which operators would be expected to have this information and in which it is relatively clear that the accident is the proximate cause of death. PHMSA has no reason to deviate from DOT standard practice in establishing this limit.

Comments on Burden Estimate, Form 7000–1, Accident Report—Hazardous Liquid Pipeline Systems

Basis for estimates: API noted that PHMSA's basis for the number of forms to be completed each year is based on the historical record of number of accidents reported. API considered this inaccurate, since a recent change to the regulations has made the regulations applicable to additional pipeline mileage (low-pressure pipeline and rural gathering lines between 6 and 8 inches in diameter). API also noted that the burden estimate included the short form, which was eliminated in this ICR. API reported its conclusion that the estimate of seven hours to complete the form is significantly low.

PHMSA response: PHMSA has restored a short form to be used for small releases. PHMSA acknowledges that more accident reports may be filed in the future as a result of additional pipeline mileage made subject to Part 195. At the same time, other regulatory (and voluntary) initiatives have been put in place that are intended to significantly reduce the number of accidents that occur. If those initiatives are successful, then use of the historic record could actually overestimate the number of reports that will be submitted in the future. It is not possible to know which outcome will occur, and PHMSA considers that use of the historical record is most appropriate.

III. Proposed Information Collection Revisions and Request for Comments

The forms to be revised are pipeline accident and incident reporting forms authorized by Information Collections OMB 2137–0522, Incident and Annual Reports for Gas Pipeline Operators and OMB 2137–0047, Transportation of Hazardous Liquids by Pipeline: Recordkeeping and Accident Reporting. The revised burdens hours associated with these information collections are specified as follows:

Title of Information Collection: Transportation of Hazardous Liquids by Pipeline: Recordkeeping and Accident Reporting.

OMB Control Number: 2137–0047.

Type of Request: Revision of currently approved information collection.

Abstract: Currently Information Collection 2137–0047 entitled ''Transportation of Hazardous Liquids by Pipeline: Recordkeeping and Accident Reporting'' has an approved burden hour estimate of 51,011 hours and 200 respondents. This information collection consists of a broad scope data collection relative to hazardous liquid pipeline operators. This notice will affect only a portion of this information collection for accident reports. PHMSA estimates that the currently approved 200 respondents for this information collection should be revised to 300 respondents. This 100 respondent increase reflects the number of smaller entities that were previously unaccounted for due to the fact that they did not have to pay user fees and were not inspected by PHMSA. Therefore, this group became recognized after we began collecting annual reports in 2004. PHMSA estimates that 150 accident reports are submitted each year. This estimate is based on accident reporting data that PHMSA has collected over the past decade (1999—2008). Currently, PHMSA estimates that each form takes an estimated 6 hours to complete. This sets burden hours relative to completion of the accident form at 1,200 hrs. (200 responses * 6 hours/response). PHMSA estimates that the form changes relative to this notice will result in a 2 hour increase in the amount of time necessary to complete an accident report. However, since we estimate that 150 accident reports are submitted each year versus 200 accident reports this 2 hour increase in time will result in no change to the total annual burden hours (200 * 6 = 150 * 8). The amendments specified above will result in the following:

Affected Public: Natural Gas and Hazardous Liquid Pipeline Operators.

Recordkeeping

Estimated Number of Respondents: 300.

Estimated Total Annual Burden Hours: 51,011 hours (no increase).

Frequency of collection: On occasion.

Title of Information Collection: Incident and Annual Reports for Gas Pipeline Operators.

OMB Control Number: 2137–0522.

Type of Request: Revision of currently approved information collection.

Abstract: Currently Information Collection 2137–0522 entitled ''Incident and Annual Reports for Gas Pipeline Operators'' has an approved burden hour estimate of 36,105 hours and 2,100 respondents. This information collection consists of incident and annual reporting for gas pipeline operators. PHMSA's approved 2137–0522 information collection estimates that 10 percent (210) of the respondent community (distribution and transmission operators) will submit an incident report. Upon review of recent annual and incident report data, PHMSA estimates the respondent community at 2,212 respondents (950 Transmission Operators and 1,262 Distribution Operators). Also, PHMSA has reviewed the past 10 years of incident data (1999—2008) and is revising the estimated 210 incident reports/year to an estimated 300 incident reports/year. PHMSA estimates that the current form will takes 6 hours to complete. This sets the current burden hours relative to completion of the incident form at 1,260 hrs. (210 responses * 6 hours/response). PHMSA estimates that the form changes relative to this notice will result in a 2 hour increase in the amount of time necessary to complete an incident report. This adjustment, along with the other amendments specified above, will increase the estimated burden hours

relative to incident forms from 1,260 hours to 2,400 hours (300 responses * 8 hours/response). This will increase the total estimated burden hours from 36,105 hours to 37,245 hours. The result of this revision is specified as follows:

Affected Public: Gas Pipeline Operators.

Recordkeeping

Estimated Number of Respondents: 2,212.

Estimated Total Annual Burden Hours: 37,245 hours (1,140 hour increase).

Frequency of collection: On occasion.

Comments are invited on:

(a) The need for the proposed collection of information for the proper performance of the functions of the agency, including whether the information will have practical utility;

(b) The accuracy of the agency's estimate of the burden of the proposed collection of information, including the validity of the methodology and assumptions used;

(c) Ways to enhance the quality, utility, and clarity of the information to be collected; and

(d) Ways to minimize the burden of the collection of information on those who are to respond, including the use of appropriate automated, electronic, mechanical, or other technological collection techniques.

Issued in Washington, DC on August 10, 2009.

Jeffrey D. Wiese,

Associate Administrator for Pipeline Safety.

[FR Doc. E9–19499 Filed 8–14–09; 8:45 am]

BILLING CODE 4910–60–P

Federal Register

Monday,
August 17, 2009

Part III

Department of Transportation

Federal Aviation Administration

14 CFR Parts 1 and 23
Certification of Turbojets; Proposed Rule

DEPARTMENT OF TRANSPORTATION

Federal Aviation Administration

14 CFR Parts 1 and 23

[Docket No. FAA–2009–0738; Notice No. 09–09]

RIN 2120–AJ22

Certification of Turbojets

AGENCY: Federal Aviation Administration (FAA), DOT.

ACTION: Notice of proposed rulemaking (NPRM).

SUMMARY: This action proposes to enhance safety by amending the applicable standards for part 23 turbojet-powered airplanes—which are commonly referred to as ''turbojets''—to reflect the current needs of industry, accommodate future trends, address emerging technologies, and provide for future airplane operations. This action is necessary to eliminate the current workload of processing exemptions, special conditions, and equivalent levels of safety findings necessary to certificate light part 23 turbojets. The intended effect of the proposed changes would: Standardize and simplify the certification of part 23 turbojets; clarify areas of frequent non-standardization and misinterpretation, particularly for electronic equipment and system certification; and codify existing certification requirements in special conditions for new turbojets that incorporate new technologies.

DATES: Send your comments on or before November 16, 2009.

ADDRESSES: You may send comments identified by Docket Number FAA–2009–0738 using any of the following methods:

- *Federal eRulemaking Portal:* Go to *http://www.regulations.gov* and follow the online instructions for sending your comments electronically.
- *Mail:* Send comments to Docket Operations, M–30, U.S. Department of Transportation, 1200 New Jersey Avenue, SE., Room W12–140, West Building Ground Floor, Washington, DC 20590–0001.
- *Hand Delivery or Courier:* Bring comments to Docket Operations in Room W12–140 of the West Building Ground Floor at 1200 New Jersey Avenue, SE., Washington, DC, between 9 a.m. and 5 p.m., Monday through Friday, except Federal holidays.
- *Fax:* Fax comments to Docket Operations at 202–493–2251.

For more information on the rulemaking process, *see* the **SUPPLEMENTARY INFORMATION** section of this document.

Privacy: We will post all comments we receive, without change, to *http://www.regulations.gov*, including any personal information you provide. Using the search function of our docket Web site, anyone can find and read the electronic form of all comments received into any of our dockets, including the name of the individual sending the comment (or signing the comment for an association, business, labor union, etc.). You may review DOT's complete Privacy Act Statement in the **Federal Register** published on April 11, 2000 (65 FR 19477–78) or you may visit *http://DocketsInfo.dot.gov.*

Docket: To read background documents or comments received, go to *http://www.regulations.gov* at any time and follow the online instructions for accessing the docket. Or, go to Docket Operations in Room W12–140 of the West Building Ground Floor at 1200 New Jersey Avenue, SE., Washington, DC, between 9 a.m. and 5 p.m., Monday through Friday, except Federal holidays.

FOR FURTHER INFORMATION CONTACT: For technical questions concerning this proposed rule, contact Pat Mullen, Regulations and Policy, ACE–111, Federal Aviation Administration, 901 Locust St., Kansas City, MO 64106; *telephone:* (816) 329–4111; facsimile (816) 329–4090; *e-mail: pat.mullen@faa.gov.* For legal questions concerning this proposed rule, contact Mary Ellen Loftus, ACE–7, Federal Aviation Administration, 901 Locust St., Kansas City, MO 64106; *telephone:* (816) 329–3764; *e-mail: mary.ellen.loftus@faa.gov.*

SUPPLEMENTARY INFORMATION: Later in this preamble under the Additional Information section, we discuss how you can comment on this proposal and how we will handle your comments. Included in this discussion is related information about the docket, privacy, and the handling of proprietary or confidential business information. We also discuss how you can get a copy of this proposal and related rulemaking documents.

Authority for This Rulemaking

The FAA's authority to issue rules on aviation safety is found in Title 49 of the United States Code. Subtitle I, Section 106 describes the authority of the FAA Administrator. Subtitle VII, Aviation Programs describes in more detail the scope of the agency's authority.

This rulemaking is promulgated under the authority described in Subtitle VII, Part A, Subpart III, Section 44701. Under that section, the FAA is charged with promoting safe flight of civil airplanes in air commerce by prescribing minimum standards required in the interest of safety for the design and performance of airplanes. This regulation is within the scope of that authority because it prescribes new safety standards for the design of normal, utility, acrobatic, and commuter category airplanes.

Table of Contents

I. Background
  A. Historical Certification Requirements Overview
  B. Aviation Rulemaking Committee (ARC) Recommendations
  C. Proposed Regulatory Requirements Overview
II. Discussion of the Proposed Regulatory Requirements
III. Regulatory Notices and Analyses
IV. The Proposed Amendments

I. Background

A. Historical Certification Requirements Overview

Title 14 Code of Federal Regulations (14 CFR) part 23 provides the airworthiness standards for Normal, Utility, Acrobatic, and Commuter Category Airplanes. The first application for the certification of a turbojet airplane under part 23 occurred in the 1970s before many of the current turbine requirements were added to part 23. Prior to this, turbojet powered airplanes were certificated to the standards under part 25. Part 25 provides the airworthiness standards for Transport category airplanes. A turbojet is a jet engine that develops thrust using a turbine compressor which is propelled by high speed exhaust gases expelled as a jet. The FAA implemented many of the certification requirements for early part 23 turbojets through special conditions based on 14 CFR part 25 (pre-amendment 25–42, (43 FR 2320)) requirements. Almost all special conditions applied to turbojets were for part 23, subpart B, Flight, and subpart G, Operating Limitations and Information.

Special conditions for part 23 certification increased performance requirements for emerging turbojets similar to those covered by early part 25 standards. The FAA established these special conditions to ensure a minimum one-engine inoperative (OEI) performance level that would be included in the airplane's limitations, thereby guaranteeing single-engine climb performance. The level of safety provided by the special conditions was purposely higher for the early turbojets than for propeller-driven airplanes in the same weight band because the manufacturers and the FAA wanted part 23 turbojets to be similar to part 25

business jets. Special conditions also addressed the following safety concerns: (1) The lack of turbine requirements in part 23, (2) the sensitivity of turbine engines to altitude and temperature effects, and (3) the high takeoff and landing speeds associated with turbojets that typically required long takeoff and landing distances, as compared to the performance of reciprocating, multiengine airplanes of that era.

In the mid-1990s, the FAA hosted a meeting for flight test pilot representatives from the Aircraft Certification Offices. The purpose of that meeting was to discuss how emerging 600 to 1,200 pound thrust engines were being developed and how the FAA would certificate future turbojet programs. The participants considered the prospect for small single- and multi-engine turbojets. At that time, the FAA assumed that any new part 23 turbojet would have similar characteristics to any existing small part 25 turbojet. However, using the preliminary design estimates from several new turbojets, FAA flight test personnel realized these assumptions were outdated. Therefore, the FAA needed to reevaluate its certification standards for turbojets against existing light-weight airplanes.

The meeting participants did not want to discourage development of small part 23 turbojets by applying significantly higher standards than for an equivalent propeller airplane. Therefore, the participants decided the best approach for future turbojet certification programs was to apply the existing part 23 weight differentiator of 6,000 pounds in establishing requirements.

B. Aviation Rulemaking Committee (ARC) Recommendations

On February 3, 2003, we published a notice announcing the creation of the part 125/135 Aviation Rulemaking Committee.[1] Part 125 addresses the certification and operations of airplanes having a seating capacity of 20 or more passengers or a maximum payload capacity of 6,000 pounds or more. Part 135 addresses the operating requirements for commuter and on-demand operations and rules governing persons on board such aircraft. Since some part 23 airplanes operate under parts 125 or 135, the ARC provided recommendations to the FAA for safety standards applicable for part 23 turbojet airplanes to reflect the current industry, industry trends, emerging technologies and operations under parts 125 and 135, and associated regulations. The ARC also reviewed the existing part 23 certification requirements and the accident history of light piston-powered, multiengine airplanes up through small turbojets used privately and for business. In addition, the ARC reviewed the special conditions applied to part 23 turbojets. The ARC completed its work in 2005 and submitted its recommendations to the FAA. Those documents may be reviewed in the docket for this proposed rule. The ARC recommended modifying forty-one 14 CFR part 23 sections as a result of its review of these areas.

As stated earlier, the FAA's intent is to codify standards consistent with the level of safety currently required through special conditions. We compared the special conditions applied to part 23 turbojets, as well as several additional proposed part 23 changes, with the ARC's recommendations. With few exceptions, the ARC recommendations validated the FAA's long-held approach to certification of part 23 turbojets.

The ARC did not want to impose commuter category takeoff speeds for turbojets above 6,000 pounds, nor did the ARC want to impose more stringent requirements for one-engine inoperative (OEI) climb performance than those established for similar-sized piston-powered and turboprop multiengine airplanes. The FAA ultimately accepted thirty-nine of the forty-one ARC recommendations and developed this proposed rulemaking in accordance with them. The two recommendations we disagreed with would have lowered the standards previously applied through special conditions.

C. Proposed Regulatory Requirements Overview

The FAA currently issues type certificates (TCs) to part 23 turbojets using extensive special conditions, exemptions, and equivalent levels of safety (ELOS). Until recently, this practice of using special conditions, exemptions, and ELOS did not represent a significant workload because there were relatively few part 23 turbojet programs. However, in the past five years, the number of new part 23 turbojet type certification programs has increased more than 100 percent over the program numbers of the past three decades. The need to incorporate special conditions, exemptions, and ELOS into part 23 stems from this rise in the number of new turbojet programs and the expected growth in the number of future programs. Codifying special conditions would standardize and clarify the requirements for manufacturers during the design phase of turbojets. Doing so would prevent instances where manufacturers design turbojets and later have to demonstrate compliance with special conditions that may require redesign. Codifying special conditions, exemptions, and ELOS would also eliminate the manufacturers' and the FAA's workload associated with processing these documents and could reduce potential delays to project schedules. Many of the proposed changes in this notice would codify certification requirements and practices currently accomplished through use of special conditions, exemptions, and ELOS.

We propose changes to part 1 definitions to clarify new requirements proposed for part 23. In addition, we propose changes to part 23 in the areas of:

- Airplane categories to allow commuter category certification of multiengine turbojets;
- Flight requirements, including standards for performance, stability, stalls, and other flight characteristics;
- Structure requirements, including standards for emergency landing conditions and fatigue evaluation;
- Design and construction requirements, including standards for flutter, takeoff warning system, brakes, personnel and cargo accommodations, pressurization, and fire protection;
- Powerplant requirements, including standards for engines, powerplant controls and accessories, and powerplant fire protection;
- Equipment requirements, including general equipment standards and standards for instruments installation, electrical systems and equipment, and oxygen systems; and
- Operating limitations and information, including standards for airspeed limitations, kinds of operation, markings and placards, and airplane flight manual and approved manual material.

II. Discussion of the Proposed Regulatory Amendments

1. Part 1: Definitions Clarifying Power and Engine Terms

We propose to amend part 1 definitions for ''rated takeoff power,'' ''rated takeoff thrust,'' ''turbine engine,'' ''turbojet engine,'' and ''turboprop engine.'' Defining engine-specific terms would clarify the new requirements proposed for part 23. The need to define some of these terms was also shown by the following communications between the FAA and members of industry. These communications were based on the existing part 1 definitions for ''rated takeoff power'' and ''rated takeoff thrust'', which limit the use of these

[1] 68 FR 5488

power and thrust ratings to no more than five minutes for takeoff operation.

In 1990, the Airline Transport Association (ATA) sent a letter to the FAA asking the FAA to allow 10-minute OEI takeoff approval. At some airports (mostly foreign), the climb gradient capability needed to clear distant obstacles after takeoff requires more time at takeoff thrust than 5 minutes. Using only 5 minutes of takeoff thrust to clear distant obstacles limits the maximum allowable airplane takeoff weight. The availability of takeoff thrust or power for use up to 10 minutes, granted by some foreign authorities, enabled some foreign operators to dispatch at an increased gross weight over that allowed for U.S. operators. U.S. operators asked for equal treatment in similar circumstances. The FAA has approved these requests when they have been properly substantiated. This policy would also apply to operators of part 23 turbojet-powered airplanes in order to achieve a climb gradient necessary to clear obstacles.

2. Expanding Commuter Category to Include Turbojets

Currently, we limit commuter category airplane requirements to propeller-driven, multiengine airplanes. The FAA has issued exemptions to allow turbojets weighing more than 12,500 pounds to be certificated under part 23. The proposal to change § 23.3 would codify the current FAA practice of certificating multiengine turbojets weighing up to and including 19,000 pounds under part 23 in the commuter category.

3. Performance, Flight Characteristics, and Other Design Considerations

a. Performance

We propose to extend the commuter category performance requirements to multiengine turbojets weighing more than 6,000 pounds. This proposal codifies requirements that we currently impose by special conditions for these airplanes. Amendment 23–45 (58 FR 42136) requires all turbine-powered airplanes weighing 6,000 pounds or less to meet many of the same performance standards for reciprocating-powered airplanes weighing more than 6,000 pounds. The FAA has determined that turbojets should meet a higher level of safety than reciprocating-powered airplanes in the same weight band. By requiring turbojets over 6,000 pounds to meet the higher commuter category certification requirements, the FAA would remain consistent in establishing more stringent requirements for turbojet airplanes than for reciprocating airplanes.

The ARC recommended no changes to performance requirements in §§ 23.51, 23.53, 23.55, 23.57, 23.59 and 23.61. The ARC pointed out that applying the commuter category takeoff performance requirements to multiengine turbojets weighing more than 6,000 pounds would include restrictions that could become a takeoff weight limitation for operations. The ARC stated that these requirements are too restrictive for part 91 operations. However, existing multiengine turbojets weighing more than 6,000 pounds are required to meet these standards through special conditions, and we have seen negligible operational impact. We have no rationale or basis to support a reduced level of safety for part 23 turbojets.

The ARC also reviewed FAA and Flight Safety Foundation accident studies for engine failure on takeoff. The ARC determined that existing normal category part 23 turboprops operated under part 135 have an acceptable safety record when compared to turbojets. Furthermore, turboprops in the accident studies were not certificated with any of the commuter category performance requirements for climb gradients.

The ARC believed the safety record of the turboprops had more to do with the inherent reliability of turbine engines rather than the higher climb gradient. An ARC member suggested the higher OEI climb gradients originated in part 25 during the large piston transport airplane engine era. Back then, the large piston engines were prone to failure on takeoff or initial climb, and the requirements for OEI climb gradients were necessary for safety.

The ARC further believed raising the OEI climb performance requirements for most multiengine airplanes was appropriate. However, the ARC debated the appropriate OEI climb gradients for turbine-powered airplanes over 6,000 pounds. Based on the reliability of turbine engines, the ARC only recommended raising the climb performance to 1 percent. This matched the ARC's recommendation of 1 percent for turbojets under 6,000 pounds. The ARC's recommendation, however, would reduce the OEI climb performance that is currently required through special conditions from 2 to 1 percent for turbojet-powered airplanes over 6,000 pounds.

Existing multiengine turbojets weighing more than 6,000 pounds are required through special conditions to meet the commuter category performance requirements (2 percent climb gradient) for OEI. We propose to maintain the 2 percent OEI climb gradient currently applied through special conditions for multiengine turbojets over 6,000 pounds. This climb gradient requirement is safe and prudent, and it is not reasonable to reduce the level of safety that already exists with part 23 turbojets.

Although special conditions have required 2 percent OEI climb gradient for multiengine turbojets over 6,000 pounds, there was no data to support whether small turbojets under 6,000 pounds could meet the higher 2 percent climb gradient while maintaining reasonable utility. If our rule changes to §§ 23.63 and 23.67 negatively impacted their utility (i.e., weight-carrying ability), the rule might give the piston-powered, multiengine airplanes a distinct market advantage. Accident studies show that turbojets are generally safer than piston-powered airplanes. Therefore, we wanted to compromise by proposing a requirement that would provide an adequate minimum safety standard and encourage production of more turbojets. One multiengine turbojet in this weight band has been operated as an air taxi, and the FAA expects this type of operation to grow. While this particular jet is capable of higher climb performance, we propose only to increase the OEI climb performance requirement to 1.2 percent because other jets in this weight band may not be capable of the higher 2 percent climb performance. Based on accident data, 1.2 percent provides an adequate minimum safety standard.

Historically, piston-powered, multiengine airplanes were allowed a lower climb requirement because they would not have any weight-carrying utility if forced to meet the same requirements of the larger airplanes. We are continuing this philosophy in this proposal. (*See* summary in the table below.)

TABLE 1—ONE-ENGINE INOPERATIVE CLIMB REQUIREMENTS TO 400 FEET ABOVE GROUND LEVEL (AGL)

Multiengine type/airplane weight band	Current rule	ARC recommendation (percent)	FAA proposal (percent)
Pistons >6,000 lbs.	Measurably positive	1.0	1.0
Turboprops ≤6,000 lbs.	Measurably positive	1.0	1.0
Turboprops >6,000 lbs.	Measurably positive	1.0	1.0
Turbojets ≤6,000 lbs.	Measurably positive	1.0	1.2
Turbojets >6,000 lbs.	2.0 percent imposed through special conditions	1.0	2.0

In addition to the proposed changes in takeoff and climb performance requirements described above, we also propose changes to other performance rules. Currently, part 23 reflects the traditional small airplane definition of landing configuration stall speed (V_{SO}). However, certification personnel have interpreted V_{SO} in part 23 as being the same as that in part 25. This interpretation has resulted in an unnecessary burden to the applicant. We are revising the part 23 requirement so that it is distinct from the part 25 requirement and to retain the original definition of the term. We are proposing to revise paragraphs (a) and (c) of § 23.49 to clarify the section. We are also proposing to correct the title of this section in the CFR to ''Stalling speed'' instead of ''Stalling period.''

V_{SO}, by definition, is the stall speed in the maximum landing flap configuration and is not applicable to other flap configurations. (V speeds are defined in part 1. To simplify the understanding of the proposed rule, we are adding this information here.) Current § 23.73 references V_{SO}. The reference to V_{SO} in this paragraph is an error and should be changed to reference the stall speed for a specified flap configuration (V_{S1}). The reference landing approach speed (V_{REF}) should be based on 1.3 times the V_{S1}. We propose to amend the standards to address airplanes certificated under part 23 that may have more than one landing flap setting. We also propose to apply the commuter category requirements for V_{REF} to multiengine turbojets over 6,000 pounds maximum weight. In addition, we propose to apply the commuter category requirements for balked landings in § 23.77 to all multiengine turbine-powered airplanes over 6,000 pounds, consistent with current special conditions for multiengine turbojets and turbine-powered airplanes over 6,000 pounds.

b. Flight Characteristics

The FAA proposes to define ''maximum allowable speed'' and to clarify the specific speed limitations, which include specific criteria for V_{FC}, V_{LE}, or V_{FC}/M_{FC} as appropriate. The proposal for § 23.177 would codify special conditions that include specific speed limitations. Furthermore, we are adding a new paragraph to § 23.175(b) to define the V_{FC}/M_{FC} (maximum speed for stability characteristics) term in part 23. This definition was inadvertently omitted in the last revision to part 23.

The FAA proposes to amend the combined lateral-directional dynamic stability damping requirements for airplanes that operate above 18,000 feet. The existing stability damping requirements, which apply at all certificated altitudes, were developed when small airplanes typically operated under 18,000 feet and were not equipped with yaw dampers. The existing requirement remains appropriate for low altitude operations, such as for approaches, but it is not appropriate for larger airplanes that typically use yaw dampers and fly at altitudes well above 18,000 feet. The FAA has issued exemptions for most turbojets certificated under part 23 because it is appropriate for high-altitude, high-speed operations. The proposed changes to § 23.181 would reduce the stability damping requirement at 18,000 feet and above. If adopted, this amendment would reduce the number of exemptions processed by the FAA by codifying what is allowed as an acceptable means of compliance.

The FAA proposes to amend the existing stall requirements in §§ 23.201 and 23.203 to include language from the turbojet special conditions. We propose clarifying the requirements for wings-level and accelerated turning stalls. We also propose changing the roll-off requirements for wings-level, high-altitude stalls.

The FAA proposes additional high-speed and high-altitude requirements to §§ 23.251 and 23.253 to address the new generation of high performance part 23 airplanes. The FAA also proposes to extend provisions from part 25, §§ 25.251(d) and (e), to part 23. However, we would limit the requirements to airplanes that fly over 25,000 feet and have a Mach dive speed (M_D) faster than Mach 0.6 (M 0.6) to be consistent with part 25 requirements. The FAA also proposes the use of V_{DF}/M_{DF}, which is demonstrated flight dive speed (V_{DF}) or Mach (M_{DF}) as referenced in the part 23 turbojet special conditions.

Furthermore, we propose adding requirements in a new § 23.255 that would be based on § 25.255 and would address potential high-speed Mach effects for airplanes with M_D greater than M 0.6. The FAA's approach would only apply the part 25-based requirements to airplanes that incorporate a trimmable horizontal stabilizer, which is consistent with the ARC's recommendation. The ARC's recommendation was based on the positive service history with the existing fleet of part 23 and part 25 turbojets designed with conventional horizontal tails that use trimmable elevators. The industry manufacturers have designed airplanes that have experienced upset incidents involving out-of-trim conditions with a trimmable horizontal stabilizer. Service experience shows that out-of-trim conditions can occur in flight for various reasons, and the control and maneuvering characteristics of the airplane may be critical in recovering from upsets. The proposed language would require exploring the airplane's high-speed control and maneuvering characteristics.

c. Other Design Considerations

We propose to revise language in § 23.703 in the introductory text and paragraph (b) to add takeoff warning system requirements to all airplanes over 6,000 pounds and all turbojets. The definition of an unsafe condition, in this case, is the inability to rotate or prevent an immediate stall after rotation. High temporary control forces that can be quickly ''trimmed out'' would not necessarily be considered unsafe.

We have proposed the commuter category, rejected takeoff requirements for all multiengine turbojets over 6,000 pounds. The higher takeoff speeds and distances for these airplanes make the ability to stop in a specified distance a safety issue. Additional braking considerations accompany the rejected

takeoff requirements. Therefore, we propose to apply the requirements for brakes in § 23.735 to all multiengine turbojets over 6,000 pounds, as well as to all commuter category airplanes.

4. Structural Considerations for Crashworthiness and High-Altitude Operations

The FAA proposes to codify into § 23.561 the recent turbojet special conditions that were not available during the ARC's effort. This proposal applies to single-engine turbojets with centerline engines embedded in the fuselage. Part 23 did not encompass embedded centerline engine installations, except for in-line propeller-pusher types. In light of several new turbojet designs, it is prudent to require greater engine retention strength for engines mounted aft of the cabin. This is especially true for engines mounted inside the fuselage behind the passengers. The proposed requirement would reduce the potential for the engine to separate from its mounts under forward-acting crash loads and subsequently intrude into the cabin. We recently applied this proposed requirement to a single-engine turbojet through special conditions.

The ARC did not consider emergency landing dynamic conditions in § 23.562. We recognize, however, that § 23.562 should be applicable to all turbojets, including those operating in the commuter category. All manufacturers of recently certificated commuter category turbojets have agreed to comply with § 23.562. The FAA proposes to amend § 23.562 to include all commuter category turbojets. This proposal would adopt current industry practice and ensure a consistent level of safety for all turbojets.

At one time, the FAA proposed to apply the requirements for emergency landing dynamic conditions to all commuter category airplanes.[2] Subsequently, we published new certification and operations requirements for commuter operations.[3] These actions required certain commuter operators that previously conducted operations under part 135 to conduct those operations under part 121. This rule, in effect, eliminated the use of new part 23 airplanes with 10 seats or more in scheduled service. This action negated any projected benefits supporting the addition of emergency landing dynamic conditions to commuter category airplanes.

The commuter operators affected were those conducting scheduled passenger-carrying operations in airplanes that have passenger-seating configurations of 10 to 30 seats (excluding any crewmember seat) and those conducting scheduled passenger-carrying operations in turbojet airplanes regardless of seating configuration. The action increased safety in scheduled passenger-carrying operations and clarified, updated, and consolidated the certification and operations requirements for persons who transport passengers or property by air for compensation or hire.

In terms of overall configuration, commuter category turbojets have little resemblance to their propeller-driven counterparts. During an emergency landing, most commuter category turbojets will have more structure underneath the cabin floor available to absorb energy than traditional propeller-driven airplanes. This capability, along with the differences in the overall airplane configuration of turbojets, would suggest the test conditions specified in the current rule should be applicable to all turbojets. However, commuter category airplanes cannot exceed a maximum takeoff weight of 19,000 pounds. With this limitation, the amount of crushable, energy absorbing structure is small when compared to most part 25 airplanes. For this reason, we propose to require the dynamic test conditions specified in part 23 rather than those in § 25.562.

We also propose to modify the seating head injury criteria (HIC) calculation in the proposed rule to be consistent with the HIC definition in part 25. This proposal addresses the concern that the HIC definition in part 23 would lead to a HIC calculation only for the total time of the head impact, which would not necessarily maximize HIC.

In the event of a ditching, the proposed change in § 23.807 would provide an alternative to meeting the current requirement for an emergency exit, above the waterline, on both sides of the cabin for multiengine airplanes. Proposed section 23.807 would allow the placement of a water barrier in the doorway before the door would be opened as a means to comply with the above waterline exit requirement. This barrier would be used to slow the inflow of water. The FAA has approved the use of this barrier as an alternative to the above waterline exit for several airplanes by issuing an ELOS finding.

Several new part 23 turbojet programs include approval for operations at altitudes above 40,000 feet. Additionally, the FAA has issued special conditions for operations up to 49,000 feet. We propose rule changes for structures and the cabin environment to ensure structural integrity of the airplane at higher altitudes. We also propose rule changes to prevent exposure of the occupants to cabin pressure altitudes that could cause them physiological injury or prevent the flight crew from safely flying and landing the airplane.

We propose to amend § 23.831 to add new paragraphs (c) and (d), which include standards appropriate for airplanes operating at high altitudes beyond those included in part 23. The proposed changes are intended to ensure flight deck and cabin environments do not result in the crew's mental errors or physical exhaustion that would prevent the crew from successfully completing assigned tasks for continued safe flight and landing. An applicant may demonstrate compliance with paragraph (d) of this requirement if the applicant can show that the flight deck crew's performance is not degraded.

The cabin environment must be conservatively specified such that no occupant would incur any permanent physiological harm after depressurization. The environmental and physiological performance limits used for demonstrating compliance must originate from recognized and cognizant authorities as accepted by the regulatory authority reviewing the compliance finding.

As part of the certification process, we would consider the entire flight profile of the airplane during the depressurization event. The profile would include cruise and transient conditions during descent, approach, landing, and rollout to a stop on the runway. We would not include taxiing as a compliance consideration because the airplane would be on the ground and could be evacuated, or flight deck windows and cabin doors could be opened for ventilation. The condition of the airplane from the beginning of the event to the end of the landing roll is accounted for when assessing the safe exit of an airplane.

We chose the words "* * * shall not adversely affect crew performance * * *" to mean the crew can be expected to reliably perform either their published or trained duties, or both, to complete a safe flight and landing. We have measured this in the past by a person's ability to track and perform tasks. The event should not result in expecting the crew to perform tasks beyond the procedures defined by the manufacturer or required by existing regulations. We use the phrase "No occupant shall sustain permanent physiological harm" to mean the occupants who may have required some

[2] 58 FR 38028.

[3] 60 FR 65832 and 61 FR 2608.

form of assistance, once treated, must be expected to return to their normal activities.

To show compliance to the proposed rule, the applicant should consider what would happen to the airplane and systems during depressurization. The applicant may also consider operational provisions, which provide for or mitigate the resulting environmental effects to airplane occupants. If the manufacturer provides an approved procedure(s) for depressurization, the flight deck and cabin crew may configure the airplane to moderate either temperature or humidity extremes, or both, on the flight deck and in the cabin. This configuration may include turning off non-critical electrical equipment and opening the flight deck door, or opening the flight deck window(s).

As with § 23.831, we find it necessary to amend the standards in § 23.841 to prevent exposure of the occupants to cabin pressure altitudes that could keep the flight crew from safely flying and landing the airplane or cause permanent physiological injury to the occupants. The intent of the proposed changes to § 23.841 is to provide airworthiness standards that allow subsonic, pressurized turbojets to operate at their maximum achievable altitudes—the highest altitude an applicant can choose to demonstrate the effects to several occupant related items after decompression. The applicant must show that: (1) The flight crew would remain alert and be able to fly the airplane, (2) the cabin occupants would be protected from the effects of hypoxia (*i.e.*, deprivation of adequate oxygen supply), and (3) if some occupants do not receive supplemental oxygen, they would be protected against permanent physiological harm.

Existing rules require the cabin pressure control system maintain the cabin at an altitude of not more than 15,000 feet if any probable failure or malfunction in the pressurization system occurs. Cabin pressure control systems on part 23 airplanes frequently exhibit a slight overshoot above 15,000 feet cabin altitude before stabilizing below 15,000 feet. Existing technology for cabin pressure control systems on part 23 airplanes cannot prevent this momentary overshoot, which prevents strict compliance with the rule. We have granted ELOS findings for this characteristic because physiological data shows the brief duration of the overshoot would have no significant effect on an airplane's occupants.

Special conditions issued for part 23 turbojets are similar and, for operating altitudes above 41,000 feet, equivalent to the requirements in § 25.841 adopted in Amendment 25–87 (61 FR 28684). That amendment revised § 25.841(a) to include requirements for pressurized cabins that were previously covered only in special conditions. The special conditions required consideration of specific failures. The FAA incorporated reliability, probability, and damage tolerance concepts addressing other failures and methods of analysis into part 25 after the issuance of the special conditions. Sections 23.571, 23.573, and 23.574 address damage tolerance requirements. We propose to require the use of these additional methods of analysis as part of this rulemaking.

This proposal also specifies a more performance-based criterion, such that failures cannot adversely affect crew performance nor result in permanent physiological harm to passengers.

(**Note:** There is a different standard for the crew than the passengers.)

Part 23 requires a warning of an excessive cabin altitude at 10,000 feet. Those regulations do not adequately address airfield operation above 10,000 feet. Rather than disable the cabin altitude warning to prevent nuisance warnings, we have issued ELOS findings that allow the warning altitude setting to be shifted above the maximum approved field elevation, not to exceed 15,000 feet. We propose to revise § 23.841 to incorporate language from existing ELOSs into the regulation.

Currently, we address oxygen systems for airplanes operating above 41,000 feet using special conditions derived from part 25. A large number of new turbojets and high-performance airplanes entering part 23 certification will operate at higher altitudes than previously envisioned for part 23 airplanes. We are proposing revisions to §§ 23.1443, 23.1445, and 23.1447 to establish requirements for oxygen systems. These new requirements would eliminate the need for special conditions for airplanes operating above 40,000 feet.

5. General Fire Protection and Flammability Standards for Insulation Materials

When we initially introduced powerplant fire protection provisions in part 23, we did not foresee turbojet engines embedded in the fuselage, nor in pylons on the aft fuselage, for airplanes certificated to part 23 standards. We propose to add fire protection requirements for turbojets in §§ 23.1193, 23.1195, 23.1197, 23.1199, and 23.1201. Part 23 has historically addressed fire protection through prevention, identification, and containment. Manufacturers have provided prevention through minimizing the potential for ignition of flammable fluids and vapors. Also historically, pilots had been able to see the engines and identify the fire or use the incorporated fire detection systems, or both. The ability to see the engine provided for the rapid detection of a fire, which led to a fire being rapidly extinguished. However, engine(s) embedded in the fuselage or in pylons on the aft fuselage do not allow the pilot to see a fire.

Isolating designated fire zones, through flammable fluid shutoff valves and firewalls, provides for containment of a fire. Containing fires ensures that components of the engine control system function effectively to permit a safe shutdown of the engine. We have only required a demonstration of containment for 15 minutes. If a fire occurs in a traditional part 23 airplane, the corrective action is to land as soon as possible. For a small, simple airplane originally envisioned by part 23, it is possible to descend the airplane to a suitable landing site within 15 minutes. If the isolation means do not extinguish the fire, the occupants can safely exit the airplane before the fire breaches the firewall.

Simple and traditional airplanes normally have the engine located away from critical flight control systems and the primary structure. This location has ensured that throughout the fire event, the pilot can continue safe flight and control of the airplane and predict the effects of a fire. Other design features of simple and traditional airplanes (*e.g.*, low stall speeds and short landing distances) ensure that even if an off-field landing occurs, the potential for a catastrophic outcome is minimized.

Specifically for airplanes equipped with embedded engines, the consequences of a fire in an engine embedded in the fuselage are more varied, adverse, and difficult to predict than the engine fire for a typical part 23 airplane. Engine(s) embedded in the fuselage offer minimal opportunity to actually see a fire. The ability to extinguish an engine fire becomes extremely critical due to this location. With the engine(s) embedded in the fuselage, an engine fire could affect both the airplane's fuselage and the empennage structure, which includes the pitch and yaw controls. A sustained fire could result in damage to this primary structure and loss of airplane control before a pilot could make an emergency landing. For embedded engine installations, we also propose requiring a two-shot fire-extinguishing system because the metallic components

in the fire zone can become hot enough to reignite flammable fumes after someone extinguishes the first fire.

We propose to upgrade flammability standards for thermal and acoustic insulation materials used in part 23 airplanes. The current standards do not realistically address situations where thermal or acoustic insulation materials may contribute to propagating a fire. The changes we propose are based on the requirements in § 25.856(a), which were adopted following accidents involving part 25 airplanes, such as the Swissair MD–11. We believe the proposed standards would enhance safety by reducing the incidence and severity of cabin fires, particularly those in inaccessible areas where thermal and acoustic insulation materials are installed.

The proposed standards include new flammability tests and criteria that address flame propagation, which would apply to thermal/acoustic insulation material installed in the fuselage of part 23 airplanes. Certification tests would consist of samples of thermal/acoustic insulation that would be exposed to a radiant heat source and a propane burner flame for 15 seconds. The insulation must not propagate flame more than 2 inches away from the burner. The flame time after removal of the burner must not exceed 3 seconds on any specimen. (*See* proposed Part II, Appendix F to part 23 for more details.)

Current flammability requirements focus almost exclusively on materials located in occupied compartments (§ 23.853) and cargo compartments (§ 23.855). The potential for an in-flight fire is not limited to those specific compartments. Thermal/acoustic insulation can be installed throughout the fuselage in other areas, such as electrical/electronic compartments or surrounding air ducts, where the potential also exists for materials to spread fire. Proposed § 23.856 accounts for insulation installed within a specific compartment in areas the regulations might not otherwise cover. Proposed § 23.856 would be applicable to all part 23 airplanes, regardless of size or passenger capacity. Advisory material describing test sample configurations to address design details (*e.g.*, tapes and hook-and-loop fasteners) is available in DOT/FAA/AR–00/12, Aircraft Materials Fire Test Handbook, dated April 2000. A copy of the handbook has been placed in the docket for this rulemaking.

Insulation is usually constructed in what is commonly referred to as a ''blanket.'' Insulation blankets typically consist of two things: (1) A batting of a material generically referred to as fiberglass (*i.e.*, glass fiber or glass wool), and (2) a film covering to contain the batting and to resist moisture penetration, usually metalized or non-metalized polyethylene terephthalate (PET), or metalized polyvinyl fluoride (PVF). Polyimide, a heat-resistant fiber used in insulation and adhesive, is another film used on certain airplanes. Regardless of the film type used, there are variations associated with its assembly for manufacture that result in performance differences from a fire safety standpoint. These variations include the density of the film, the type and fineness of the scrim bonded to the film, and the adhesive used to bond the scrim to the film. The scrim resembles a screen, and the mesh can vary in fineness. The scrim is usually constructed of either nylon or polyester and is bonded to the backside of the film to add shape and strength to the surface area. The adhesive used to bond the scrim to the film also varies. However, the type of adhesive used is important because fire retardant is frequently concentrated in the adhesive of the assembled sheet.

6. Powerplant and Operational Considerations

Current § 23.777 standardizes the height and location of powerplant controls because pilots may become confused and use the wrong controls on propeller-driven airplanes. This requirement, however, does not include single-power levers (which are typical for electronically-controlled engines). The FAA currently makes an ELOS finding for each airplane program that includes a single-power lever. We propose to revise paragraph (d) in § 23.777 to incorporate the ELOS language.

We propose to revise § 23.903, paragraph (b)(2), to add requirements for fuselage-embedded, turbofan engine installations. These types of engine installations may have a negative impact on passenger safety because passengers occupy an area directly ahead of the turbojet engine fan disk. Certain turbofan engine designs have failure conditions that allow the fan disk to exit the front of the engine. This failure condition occurs if engines have bearing/shaft configurations that would allow the disk to separate from the engine and travel forward. If the engine has demonstrated this failure mode or if an analysis shows such a failure is conceivable, then the requirements of this section would apply. This requirement would be applicable to engines embedded in the airplane's fuselage where it could move forward into areas occupied by passengers or crew when a disk fails.

In addition to the changes described above, we also propose requiring that electronic engine control systems meet the equipment, systems, and installation standards of § 23.1309. We have applied this requirement to all digital engine controls in part 23 airplanes by special condition. The proposed rule change for § 23.1141 would largely eliminate the need to issue special conditions on future certification programs.

The ARC believed few single-engine airplane manufacturers have analyzed the criticality of their control system to meet the requirements of this proposed rule. The fundamental rule change recommended by the ARC for § 23.1141 was not intended to invalidate or overrule the 14 CFR part 33 certification requirements. The proposed change for § 23.1141 is intended for consideration of the airframe/engine interface and how that interface protects against high intensity radiated fields (HIRF) and lightning.

Over the years, airplane engines, including turbines, generated their own ignition system electrical power separate from the airplane's electrical generation system. Even with a complete electrical failure of the primary electrical systems, the engines would still run and be fully functional. However, all new engines are not designed with self-electrical-generation capability. Some new engines rely on the airplane's electrical system to continue running and to be fully functional. Revising § 23.1165(f) would ensure that when approved engines are installed on part 23 airframes, the engine ignition system is identified as an essential load. This would ensure that those engines have power during emergencies.[4]

7. Avionics, Systems, and Equipment Changes

Updated system requirements should reduce the regulatory burden on the applicant by clarifying and expanding the applicability of §§ 23.1301 and 23.1309 to specific systems and functions. Most new part 23 airplane manufacturers are installing electronic primary flight displays (PFD) and multifunction displays (MFD) that replace conventional electromechanical and mechanical instruments. These new systems also offer more capability, reliability, and features that improve safety.

[4] Under the proposed changes, we would certificate new engines, which include electronic ignition systems and engines with electronic controls necessary for the engine's operation, through the Engine and Propeller Directorate.

We propose changes that would address displays, software, hardware, and power requirements. Besides advanced avionics and integrated systems, we propose to update the certification requirements to consider other advanced technologies (*e.g.*, digital engine controls). We intend to apply lessons learned from recent small turbojet certification programs to update requirements for intended function and system safety.

The ARC did not make a specific recommendation for § 23.1301. However, the FAA seeks to clarify the intent of this section because it is frequently misinterpreted and misapplied. Clarifying the intent of § 23.1301 would improve standardization for systems and equipment certification, particularly for non-required equipment and non-essential functions embedded within complex avionic systems. Our intent is for the applicant to define proper functionality and to propose a means of compliance acceptable to the Administrator. We expect applicants to coordinate or negotiate deviations from established means of compliance with the Administrator as early as possible to minimize delay to project schedules.

We propose to remove § 23.1301(d), which currently states that equipment must ''function properly when installed.'' The proposed change would limit the scope of the rule since it would apply only to equipment required for type certification or operation. We propose a related change to clarify similar language in § 23.1309 for proper functionality of installed equipment.

The ARC did not make a specific recommendation for § 23.1303. However, the FAA seeks to clarify the intent of this rule to accommodate new technology and eliminate the need to issue an ELOS for part 23 airplanes. We propose to amend § 23.1303(c) by changing the current requirement from ''A direction indicator (non-stabilized magnetic compass)'' to ''A magnetic direction indicator.'' Section 23.1303 does not include a direction indicator, other than the typical non-stabilized compass for part 23 airplanes. As new technology becomes more affordable for part 23 airplanes, many electronic flight instrument systems will use magnetically stabilized direction indicators (or electric compass systems) to measure and indicate the airplane heading to provide better performance.

Current regulations require powerplant displays, referred to as ''indicators'' in § 23.1305, to provide trend or rate-of-change information. Advisory Circular (AC) 23.1311–1B, Installation of Electronic Displays in Part 23 Airplanes, dated June 14, 2005, currently provides a basis for an ELOS finding for digital engine display parameters.[5] The proposed rule changes to §§ 23.1303, 23.1305, and 23.1311 would largely eliminate the need to issue ELOS findings for these systems and help standardize certification of new technology.

The ARC also did not make a specific recommendation for § 23.1307. However, the FAA seeks to clarify language so applicants understand they may need additional equipment to operate their airplane. Part 23 is a minimum performance standard, and it may not include all the required equipment for commercial operations under 14 CFR part 135. We propose to include parts 91 and 135 operations as examples to use when deciding which equipment is necessary for an airplane to operate at the maximum altitude.

a. System SafetyAssessment Requirements

We originally designed the system safety assessment requirements of § 23.1309 to address certification of electronic systems driven by microprocessors and other complex systems. However, the requirements of § 23.1309 are being applied to conventional mechanical and electromechanical systems with well-established design and certification processes. This was not our intent, and we propose to revise § 23.1309 to clarify the intended application of the rule.

Proposed changes for § 23.1309 also clarify the intent for certification of electronic engine controls. The current section excludes systems certificated with the engine. Therefore, we use special conditions for all electronic engine control installation approvals to capture the evaluation requirements of § 23.1309. We applied special conditions to the interface of the electronic engine control system and the airplane. We also applied special conditions to verify that the installation does not invalidate the assumptions made during part 33 certification of the engine. This proposal would address electronic engine controls and eliminate the need for special conditions to apply § 23.1309 to electronic engine control systems.

Proposed § 23.1309(a) would have requirements for two different types of equipment and systems installed in the airplane. Proposed § 23.1309(a)(1) would cover the equipment and systems that have no negative safety effect and those installed to meet a regulatory requirement. Such systems and equipment are required to ''perform as intended under the airplane operating and environmental conditions.'' Proposed § 23.1309(a)(2) would require the applicant to show that all equipment and systems (including approved ''amenities,'' such as a coffee pot and entertainment systems) have no safety effect on the operation of the airplane. The phrase ''improper functioning'' identifies equipment and system failures that have a potentially negative effect on airplane safety. Therefore, we must consider their potential failure condition(s). Using § 23.1309, we must analyze any installed equipment or system that has potential failure condition(s) that are catastrophic, hazardous, major, or minor to determine their impact on the safe operation of the airplane.

We propose to clarify the certification requirements, environmental qualification test requirements, and our intent for determining proper ''intended function'' of non-required systems and equipment that do not have a safety effect on the airplane. A problem with the current requirements for airplane manufacturers arises when certification authorities question installation of non-required systems and equipment that do not perform following their specifications and, therefore, are ''not functioning properly when installed.'' Usually, normal installation practices can be based on a relatively simple qualitative installation evaluation. If the possible safety impacts (including failure modes or effects) are questionable, or isolation between systems is provided by complex means, more formal structured evaluation methods or a design change may be necessary. We do not require these types of equipment and systems to function properly when installed. However, we would require them to function when they are tested to verify that they do not interfere with the operation of other airplane equipment and systems and do not pose a hazard in and of themselves.

Also under proposed changes to § 23.1309(a), we would replace the conditional qualifiers of ''under any foreseeable operating condition,'' contained in the current § 23.1309(b)(1), with ''under the airplane operating and environmental conditions.'' Our intent with this proposal is for the applicant to take two actions. First, the applicant must consider the full normal operating envelope of the airplane, as defined by the airplane flight manual (AFM), with any modification to that envelope associated with abnormal or emergency procedures and any anticipated crew

[5] A copy of the advisory circular is available on the Internet at *http://www.faa.gov/regulations_policies/*.

action. Second, the applicant must consider the anticipated external and internal airplane environmental conditions, as well as any additional conditions where equipment and systems are assumed to ''perform as intended.'' We propose to make this change in response to an observation that although certain operating conditions are foreseeable, achieving normal performance when they exist is not always possible (*e.g.*, you may foresee ash clouds from volcanic eruptions, but airplanes with current technology cannot safely fly in such clouds).

The FAA currently accepts equipment that is susceptible to failures if these failures do not contribute significantly to the existing risks (*e.g.*, some degradation in functionality and capability is routinely allowed during some environmental qualifications, such as HIRF and lightning testing). System lightning protection specifically allows the loss of function and capability of some electrical/electronic systems when the airplane is exposed to lightning, if ''these functions can be recovered in a timely manner.''

Proposed § 23.1309(a)(3) is applicable for all functional reliability, flight testing, or flight evaluations. This proposed change clarifies the FAA's expectations for functional testing during certification of complex systems, but it is not meant to increase the testing burden on the applicant. The FAA's intent is to prohibit certification of systems with known defects in required functions that could impact safety. For example, it would not be acceptable for an integrated avionics system to be approved until known functional defects in required functions are corrected. The system would not be allowed to exhibit unintended or improper functionality for flight critical functions. The rate of occurrence of failures, malfunctions, and design errors must be appropriate for the failure condition(s) of the type of system and airplane.

Proposed § 23.1309(b) would codify a long-established means of compliance with current § 23.1309(b) and update failure condition(s) terminology used in related system safety assessment documents developed by industry working groups (*e.g.*, RTCA and the Society of Automotive Engineers (SAE)). This means of compliance identifies four classes of airplanes as defined in Appendix K of this proposal and applies appropriate probability values and development assurance levels for each class. The original text of § 23.1309(b)(4) has been retained and appears as § 23.1309(b)(5) in this revision. The proposed changes to § 23.1309(c) and (d) are meant to define the proper scope and intent for applying § 23.1309 depth of analysis for system safety assessments to all systems.

With proposed § 23.1309(f), we would make § 23.1309 compatible with the current § 23.1322 (''Warning, caution, and advisory lights'') that distinguishes between caution, warning, and advisory lights installed on the flight deck. Rather than only providing a warning to the flight crew, which is required by the current rule, proposed § 23.1309(f) would require that information concerning an unsafe system operating condition(s) be provided to the flight crew.

A warning indication would still be required if immediate action by a flight crewmember were required. The particular method of indication would depend on the urgency and need for flight crew awareness or action that is necessary for the particular failure. Inherent airplane characteristics may be used in lieu of dedicated indications and annunciations that can be shown to be timely and effective. The use of periodic maintenance or flight crew checks to detect significant latent failures when they occur should not be used in lieu of practical and reliable failure monitoring and indications.

Proposed § 23.1309(f) would clarify the current rule by specifying that the design of systems and controls, including indications and annunciations, must reduce crew errors that could create more hazards. The additional hazards to be minimized would be those that are caused by inappropriate actions made by a crewmember in response to the failure, or those that could occur after a failure. Any procedures for the flight crew to follow after the occurrence of a failure indication or annunciation would be described in the approved Airplane Flight Manual (AFM), AFM revision, or AFM supplement, unless they are accepted as part of normal aviation abilities.

Current § 23.1309 (c) and (d) are not directly related to the other safety and analysis requirements of § 23.1309. The ARC considered it appropriate to state the requirements separately for clarity. We agree with this suggested change and propose to add a new § 23.1310 to accommodate the change. The requirements as originally stated in current § 23.1309 would not change, except for a new section number.

We propose several changes to § 23.1311(a)(5) for plain language purposes. In proposed § 23.1311(a)(5), we replace the phrase ''individual electronic display indicators'' with ''electronic display parameters.'' The term ''indicator'' has a long-standing definition based on conventional, mechanical indicators; therefore, the term has caused confusion. These electronic display parameters could be integrated on one electronic display that is independent of the primary flight display. In proposed § 23.1311(a)(6), we add the phrase ''that provide a quick-glance sense of rate and, when appropriate, trend information'' to clarify ''sensory cues.''

We propose to add the term ''when appropriate'' to eliminate the requirement to display trend information when it would otherwise provide intuitive information to the pilot. For example, the trend for fuel burn is always negative. We propose to remove the remainder of section (a)(6), ''* * * that are equivalent to those in the instrument being replaced by the electronic display indicator'' to prevent confusion since most instruments will be electronic. In proposed § 23.1311(a)(7), we have added the word ''equivalent'' to make acceptable instrument markings on electronic displays that are equivalent to those instrument markings on conventional mechanical and electromechanical instruments.

In proposed § 23.1311(b), we replace the phrase ''remain available to the crew, without need for immediate action'' with ''be available within one second to the crew with a single pilot action or by automatic means.'' The proposed language allows an applicant to take credit for reversionary or secondary flight displays on a multi-function flight display (MFD) that provides a secondary means of primary flight information (PFI). This is acceptable if the display can ''be available within one second to the crew with a single pilot action or by automatic means.'' MFD's may also display PFI as needed to ensure continuity of operations. The display of PFI on reversionary (secondary) displays must be arranged in the basic T-configuration. Also, such displays must be legible and usable from the pilot's position with minimal head movement to meet the requirements of § 23.1321.

There are three acceptable methods for meeting the requirements of § 23.1311(b)—(1) Dedicated standby instruments, (2) dual primary flight displays (PFDs), or (3) reversionary displays that display independent attitude. The standby instruments, or another independent PFD, would ensure that primary flight information is available to the pilot during all phases of flight and system failures. The

electronic display systems with dual PFDs should incorporate dual, independently-powered sensors that would provide primary flight parameters (*e.g.*, attitude heading reference system (AHRS) with comparators and dual air data computer (ADC)). A reversionary configuration would have a single pilot action that would force MFD displays into reversionary mode operation by a single pilot action within one second or less. However, the PFI must be displayed in substantially the same format and size in the reversionary mode as it is in normal mode. The single pilot action should be easily recognized, readily accessible, and have the control within the pilot's primary field of view.

The reversionary method could include an automatic reversionary display with a single pilot action. If PFI on another display is not provided, we would require automatic switching to ensure PFI is available to the pilot. This automatic reversionary capability would cover most possible malfunctions. While a total loss of the display may not be reliably detected automatically, such a failure condition would be obvious to the pilot. Malfunctions that result in automatic switching would be extensive enough to ensure PFI is available at the reliability level required by § 23.1309. If such a malfunction occurs, a single pilot action would provide a full display of the essential information on the remaining display within one second. All modes, sources, frequencies, and flight plan data would be exactly as they were on the PFD before the failure.

Another reversionary method would include a means to access the reversionary mode manually through a single pilot action. Manual activation of the reversionary mode on the MFD through single action by the pilot would be acceptable when procedures to activate the PFI are accomplished before entering critical phases of flight. The PFI would display continuously on the reversionary display during critical phases of flight (*e.g.*, takeoff, landing, and missed or final approach).

To meet the proposed turbojet performance requirements in subpart B, the pilot would need accurate speed indicators while accelerating on the runway. We propose to revise § 23.1323(e) to add the requirement to calibrate the airspeed system down to 0.8 of the minimum value of V_1. Also, we propose to adopt the language used in part 25 for this same requirement because it is more in line with operating new part 23 turbojets.

The proposed changes to § 23.1331 would apply to instruments that rely on a power source to provide required flight information for instrument flight rules (IFR) operations. Consequently, this section would apply to all flight instruments, such as those required by parts 23, 91, 121, and 135. Airplanes limited by type design to visual flight rules (VFR) operations would not have to comply with the requirements of proposed § 23.1331(c).

Each independent power source must provide sufficient power for normal operations throughout the approved flight envelope of the airplane and for any operations approved for the airplane. Section 23.1331(c) would not require the installation of dual alternators or vacuum systems on single-engine airplanes. One option would include a dedicated battery that meets the requirements of § 23.1353(h) for electrical instrument loads essential to continued safe flight and landing. Another option would include separately powered instruments for primary and standby use. The last option would include performing a system safety analysis, per § 23.1309, to identify the procedures necessary to verify the charge state of any airplane starting battery that is used to power a stand-by system.

The ARC did not make a specific recommendation for § 23.1353. However, we propose to add additional battery endurance requirements depending on the airplane's altitude performance. Proposed § 23.1353 addresses the power needs of new all-electrical instruments, navigation and communications equipment, and engine controls.

When § 23.1353(h) was adopted, part 23 airplanes were mostly mechanical. We did not envision all-electric, or almost all-electric, airplanes. Current § 23.1353(h) requires 30 minutes of sufficient electrical power for a reduced or emergency group of equipment and instrumentation. We considered 30 minutes adequate to reach VFR conditions to continue flying to an adequate airport and to accomplish a safe landing for traditional part 23 airplanes. We did not envision integrated electric cockpits when we developed § 23.1353(h). New part 23 airplanes are being certificated with all-electrical instruments, including the standby instruments. This reliance on electric power increases the importance of ensuring adequate battery power until the pilot can descend and make a safe landing.

Most new engines utilize electronic engine controls. These engine controls may rely on the airplane's electrical system for power and to control fuel and ignition. Large engines typically installed on part 25 airplanes have a dedicated power source running off the engine; as long as the engine is running, the electronic engine control has power. Some of the smaller, simpler engines emerging in part 23 airplanes may not have these dedicated power sources and may rely on the airplane's electrical system to keep functioning.

We believe that most new turbine-powered airplanes, and some turbocharged, piston-powered airplanes, will operate at high altitudes under IFR. Under these conditions, 30 minutes may not be adequate for battery power because of the time it would take to descend from maximum altitude to find visual meteorological conditions (VMC) and land, or to perform an instrument approach for a landing. For these reasons, proposed § 23.1353(h) would extend the battery time requirement to 60 minutes for airplanes approved with a maximum altitude above 25,000 feet.

Many new single-engine airplanes are intended for use in part 135 passenger service. Proposed § 23.1353(h) provides consistency with the operating requirements for single-engine IFR in § 135.163(i). That section requires a 60-minute battery to power all emergency equipment, as specified by the manufacturer, to allow continued safe flight and landing.

b. Allowable Qualitative Failure Condition Probabilities

We propose to add Appendix K to show the appropriate airplane systems probability standards, failure conditions, and related development assurance for four certification classes of airplanes designed to part 23 standards. Proposed Appendix K includes development assurance levels that correlate to the software levels in RTCA/DO–178B and the complex design assurance levels in RTCA/DO–254. We provided quantitative values in Appendix K to indicate the order of probability range for each certification class and failure condition.

As used in § 23.1309, the FAA proposes the following definitions for terms used in Appendix K:

i. *Extremely remote failure conditions:* Those failure conditions not anticipated to occur to each airplane during its total life but which may occur a few times when considering the total operational life of all airplanes of this type. For quantitative assessments, refer to the probability values shown for hazardous failure conditions in Appendix K.

ii. *Extremely improbable failure conditions:* For commuter category airplanes, those failure conditions so unlikely that they are not anticipated to occur during the entire operational life of all airplanes of one type. For other

classes of airplanes, the likelihood of occurrence may be greater. For quantitative assessments, refer to the probability values shown for catastrophic failure conditions in Appendix K.

iii. *Probable failure conditions:* Those failure conditions anticipated to occur one or more times during the entire operational life of each airplane. These failure conditions may be determined on the basis of past service experience with similar components in comparable airplane applications. For quantitative assessments, refer to the probability values shown for minor failure conditions in Appendix K.

iv. *Remote failure conditions:* Those failure conditions that are unlikely to occur to each airplane during its total life but that may occur several times when considering the total operational life of a number of airplanes of this type. For quantitative assessments, refer to the probability values shown for major failure conditions in Appendix K.

v. *Design appraisal:* A qualitative appraisal of the integrity and safety of the system design. An effective appraisal requires experienced judgment.

vi. *Development assurance level:* All planned and systematic actions used to substantiate, to an adequate level of confidence, that errors in requirements, design, and implementation have been identified and corrected such that the system satisfies the applicable certification basis. (The development assurance levels in Appendix K are intended to correlate to software levels in RTCA/DO–178B and complex hardware design assurance levels in RTCA/DO–254 for the system or item.)

vii. *Simple and conventional systems:* A system is considered ''simple'' or ''conventional'' if its function, the technological means to implement its function, and its intended usage are all the same as, or closely similar to, that of previously approved systems commonly used. The systems that have established an adequate service history and the means of compliance for approval are generally accepted as ''simple'' or ''conventional.'' Simple systems do not contain software or complex hardware requiring compliance by documents. These documents are the developmental assurance levels assigned in RTCA/DO–178A/B, Software Considerations in Airborne Systems and Equipment Certification, or RTCA/DO–254, Design Assurance Guidance for Airborne Electronic Hardware documents or later versions.

For simple and conventional installations, it may be possible to assess a hazardous or catastrophic failure condition(s) as being extremely remote or extremely improbable, respectively, based on an FAA approved qualitative analysis. The basis for the assessment would be the degree of redundancy, the established independence and isolation of the channels, and the reliability record of the technology involved. Satisfactory service experience on similar systems commonly used in many airplanes may be sufficient when a close similarity is established regarding both the system design and operating conditions.

viii. *Installation appraisal:* A qualitative appraisal of the integrity and safety of the installation. Any deviations from normal industry-accepted installation practices should be evaluated.

8. Placards, Speeds, Operating Limitations, and Information

Currently, § 23.853(d)(2) requires placards for commuter category airplanes to have red letters at least ½ inch high on a white background at least 1 inch high. The letter size is not a requirement for the part 23 normal category or for the part 25 transport category airplanes. We propose removing the letter size requirement from this section. We also propose removing the ashtray requirement from this section since smoking is no longer allowed in parts 121 and 135 operations. We propose to amend paragraph (d)(2) of this section to read ''Lavatories must have 'No Smoking' or 'No Smoking in Lavatory' placards located conspicuously on each side of the entry door.''

Proposed § 23.629 would allow the use of V_{DF} in place of V_D for flight testing turbojets. In addition, the proposed amendment for § 23.1505 would require airspeed limits based on a combination of analytical (V_D/M_D) and demonstrated (V_{DF}/M_{DF}) dive speeds for turbojets. Proposed § 23.1505(c) would include specific turbojet speed designations.

The ARC did not make a specific recommendation regarding § 23.1525. However, we propose to clarify language so applicants understand that additional equipment may be needed to operate their airplane. Part 23 is a minimum performance standard, and it may not include all the required equipment for operations under part 135. We propose to include parts 91 and 135 operations as examples of the kinds of operation authorized.

Proposed § 23.1545 limits the white flap arc to reciprocating engine airplanes. This change reflects standard practice for turbojets and is included in all part 23 turbojet special conditions.

Proposed § 23.1555(d)(3) would require fuel systems with a calibrated fuel quantity indication system to comply with § 23.1337(b)(1) while removing current placard requirements. Most modern turbine-powered airplanes have a calibrated fuel quantity indicating system that is density compensated and accurately indicates the actual usable fuel quantity in each tank. When using these types of fuel indicating systems, we consider the placards required by §§ 23.1555(d)(1) and (2) redundant. The placards or markings required by §§ 23.1555(d)(1) and (2) indicate the maximum capacity of the tank. For these reasons, we propose to remove the placard requirement for these accurate fuel quantity indicating systems.

The placard requirements of §§ 23.1559, 23.1563 and 23.1567 have been a source of confusion to both FAA and industry personnel relative to placard lighting. We are proposing changes to these three rules to clarify the intent of these requirements. The requirements specified on the placard in § 23.1559 are relative to preflight planning, and this placard is not normally referenced in flight. As long as the placard is ''in clear view of the pilot'' and the pilot can view it at night using a flashlight or other means, the intent of the rule is met. The requirement has been confusing for certification offices and this proposal makes the placard lighting intent clear. We propose to add a new paragraph § 23.1559(d), which states ''The placard required by this section need not be lighted.''

With modern flight display equipment, the necessary information may now be available on that equipment and is automatically illuminated as part of the display. Therefore, we also propose to update § 23.1563 to clarify requirements for night lighting of the placard. Maneuvering speed is applicable to operations that may involve intentional large control input and is therefore not applicable to normal night operations. Most modern airplanes have means for the landing gear speed to be displayed in the airspeed indicator or on lighted portions of the landing gear control. They have the means for the airspeed indicator to display low speed awareness or other airspeed reference information to provide safety above V_{MC}. Lighting this placard is unnecessary for safety and provides another source of unwanted lighting reflections in the cockpit.

The requirements specified in § 23.1567 for the limitation placard relate to acrobatic maneuvers and spin information related to preflight

planning. Since these maneuvers are not normally conducted during night operations, the placard information is not required for night flight. If the placard is ''in clear view of the pilot'' and the pilot can view the placard at night using a flashlight or other means, it meets the intent of the rule. The proposed change to § 23.1567 clarifies our intent of this rule relative to lighting.

We propose to incorporate the existing special conditions into the AFM requirements in §§ 23.1583, 23.1585, and 23.1587. These are necessary to be consistent with the performance requirements proposed in subpart B. These requirements include the ARC recommended, single-engine climb performance increase for turboprops.

III. Regulatory Notices and Analyses

Paperwork Reduction Act

According to the 1995 amendments to the Paperwork Reduction Act (5 CFR 1320.8(b)(2)(vi)), an agency may not collect or sponsor the collection of information, nor may it impose an information collection requirement unless it displays a currently valid OMB control number. The OMB control number for this information collection will be published in the **Federal Register,** after the Office of Management and Budget approval.

International Compatibility

In keeping with U.S. obligations under the Convention on International Civil Aviation, it is FAA policy to comply with International Civil Aviation Organization (ICAO) Standards and Recommended Practices to the maximum extent practicable. The FAA has reviewed the corresponding ICAO Standards and Recommended Practices and has identified no differences with these proposed regulations.

Regulatory Evaluation, Regulatory Flexibility Determination, International Trade Impact Assessment, and Unfunded Mandates Assessment

Changes to Federal regulations must undergo several economic analyses. First, Executive Order 12866 directs that each Federal agency shall propose or adopt a regulation only upon a reasoned determination that the benefits of the intended regulation justify its costs. Second, the Regulatory Flexibility Act of 1980 (Pub. L. 96–354) requires agencies to analyze the economic impact of regulatory changes on small entities. Third, the Trade Agreements Act (Pub. L. 96–39) prohibits agencies from setting standards that create unnecessary obstacles to the foreign commerce of the United States. In developing U.S. standards, this Trade Act requires agencies to consider international standards and, where appropriate, that they be the basis of U.S. standards. Fourth, the Unfunded Mandates Reform Act of 1995 (Pub. L. 104–4) requires agencies to prepare a written assessment of the costs, benefits, and other effects of proposed or final rules that include a Federal mandate likely to result in the expenditure by State, local, or tribal governments, in the aggregate, or by the private sector, of $100 million or more annually (adjusted for inflation with base year of 1995). This portion of the preamble summarizes the FAA's analysis of the economic impacts of this proposed rule. We suggest readers seeking greater detail read the full regulatory evaluation, a copy of which we have placed in the docket for this rulemaking.

In conducting these analyses, FAA has determined that this proposed rule: (1) Has benefits that justify its costs, (2) is not an economically ''significant regulatory action'' as defined in section 3(f) of Executive Order 12866, (3) the Office of Management and Budget has determined this proposal is ''significant''; (4) would not have a significant economic impact on a substantial number of small entities; (5) would not create unnecessary obstacles to the foreign commerce of the United States; and (6) would not impose an unfunded mandate on state, local, or tribal governments, or on the private sector by exceeding the threshold identified above. These analyses are summarized below.

Total Benefits and Costs of This Rule

The estimated base case cost of this proposed rule is about $472,000 ($443,000 in 7 percent present value terms). The estimated safety benefits would be to avoid 14 accidents and are valued at about $82.7 million. The estimated base case efficiency benefits to streamline the part 23 certification process are valued at about $1.6 million. The total base case benefit is equal to the sum of the safety and efficiency benefits and is valued at about $84.2 million.

Who Is Potentially Affected by This Rule

This proposed rulemaking will affect manufacturers and operators of part 23 reciprocal engine, turboprop and turbojet airplanes.

Assumptions

The proposed rule makes the following assumptions:

1. The base year is 2008.
2. The average retirement age of a U.S. operated part 23 airplane is 32 years.
3. The average part 23 airplane production life cycle is 24 years.
4. The analysis period extends for 56 (32 + 24) years.
5. U.S companies would manufacture 75 percent of the turbojets forecasted by the FAA.
6. All business and commercial part 23 airplanes would operate in commuter service.
7. The value of a fatality avoided is $5.8 million.

Benefits of This Rule

For part 23 airplanes, we estimated that the proposed changes would avoid about 14 accidents over the 24-year operating lives of 37,657 new-production airplanes. The resulting benefits include averted fatalities and injuries, loss of airplanes, investigation cost, and collateral damages for the accidents. The safety benefits for averting the 14 accidents are about $82.7 million ($17.8 million in 7 percent present value terms).

Other benefits of this proposal include FAA and industry paperwork and certification time saved by standardizing and streamlining the certification of part 23 airplanes. The base case efficiency benefits for standardizing and streamlining the certification process is valued at $1.6 million.

The total base case benefit is equal to the sum of the safety and efficiency benefits and is about $84.2 million ($19.3 million in 7 percent present value terms).

Costs of This Rule

Constant-dollar (2008$) unit costs per aircraft by 14 CFR Part 23 could be as high as: $165 for turboprop airplanes and $6,550 for turbojet airplanes. Total incremental costs equal the constant-dollar unit costs multiplied by the number of aircraft produced over 10 years. The base case costs of this rule are about $472,000 ($443,000 in 7 percent present value terms) and the high case costs of this rule are about $11.1 million ($5.0 million in 7 percent present value terms).

Alternatives Considered

Alternative 1—The FAA would continue to issue special exemptions, exceptions and equivalent levels of safety to certificate part 23 airplanes. As that would perpetuate ''rulemaking by exemption,'' we choose not to continue with the status quo.

Alternative 2—The FAA continue to enforce the current regulations that affect single engine climb performance.

The FAA rejected this alternative because the accident rate on twin piston engine and turboprop airplanes identified a safety issue that had to be addressed.

Regulatory Flexibility Determination

The Regulatory Flexibility Act of 1980 (Pub. L. 96–354) (RFA) establishes ''as a principle of regulatory issuance that agencies shall endeavor, consistent with the objectives of the rule and of applicable statutes, to fit regulatory and informational requirements to the scale of the businesses, organizations, and governmental jurisdictions subject to regulation. To achieve this principle, agencies are required to solicit and consider flexible regulatory proposals and to explain the rationale for their actions to assure that such proposals are given serious consideration.'' The RFA covers a wide-range of small entities, including small businesses, not-for-profit organizations, and small governmental jurisdictions.

Agencies must perform a review to determine whether a rule will have a significant economic impact on a substantial number of small entities. If the agency determines that it will, the agency must prepare a regulatory flexibility analysis as described in the RFA. However, if an agency determines that a rule is not expected to have a significant economic impact on a substantial number of small entities, section 605(b) of the RFA provides that the head of the agency may so certify and a regulatory flexibility analysis is not required. The certification must include a statement providing the factual basis for this determination, and the reasoning should be clear.

The FAA believes that this proposed rule would not have a significant impact on a substantial number of entities. The purpose of this analysis is to provide the reasoning underlying the FAA determination.

First, we will discuss the reasons why the FAA is considering this action. We will follow with a discussion of the objective of, and legal basis for, the proposed rule. Next we explain there are no relevant federal rules which may overlap, duplicate, or conflict with the proposed rule. Lastly, we will describe and provide an estimate of the number of small entities affected by the proposed rule and why the FAA believes this proposed rule would not result in a significant economic impact on a substantial number of small entities.

We now discuss the reasons why the FAA is considering this action.

The FAA proposes this action to amend safety and applicability standards of the part 23 turbojet industry to reflect the current needs of the industry, accommodate future trends, address emerging technologies, and provide for future aircraft operations. This proposal primarily standardizes and streamlines the certification of part 23 turbojet airplanes. The intent of the proposed changes to parts 1 and 23 are necessary to eliminate the current workload of exemptions, special conditions, and equivalent levels of safety determinations necessary to certificate part 23 turbojets. These proposed part 23 changes will also clarify areas of frequent non-standardization and misinterpretation and provide appropriate safety and applicability standards that reflect the current state of the industry, emerging technologies and new types of operations for all part 23 airplanes; including turbojet, turboprop and reciprocating engine airplanes.

The FAA currently issues type certificates (TCs) for part 23 turbojets using extensive special conditions. Issuance of TCs has not been significant until now because there were few part 23 turbojet programs. However, in the past five years, the number of new turbojet certification programs in part 23 has increased more than 100 percent over the past three decades.

The need to incorporate these special conditions into part 23 stems from both the existing number of new jet programs and the expected future jet programs. Codifying these special conditions will allow manufacturers to know the requirements during their design phase instead of designing the turbojet and then having to apply for special conditions that may ultimately require a redesign. Codifying will also reduce the manufacturers and FAA's paper process required to TC an airplane and reduces the potential for program delays. These proposed changes would also clarify areas of frequent non-standardization and misinterpretation, particularly for electronic equipment and system certification.

The revisions include general definitions, error correction, and specific requirements for performance and handling characteristics to ensure safe operation of part 23 transport category airplanes. The proposed revisions would apply to all future new part 23 turbojet, turboprop and reciprocating engine airplane certifications.

We now discuss the legal basis for, and objective of, the proposed rule. Next, we discuss if there are relevant federal rules, which may overlap, duplicate, or conflict with the proposed rule.

The FAA's authority to issue rules on aviation safety is found in Title 49 of the United States Code. Subtitle I, Section 106 describes the authority of the FAA Administrator. Subtitle VII, Aviation Programs, describes in more detail the scope of the agency's authority.

This rulemaking is promulgated under the authority described in Subtitle VII, Part A, Subpart III, Section 44701. Under that section, the FAA is charged with promoting safe flight of civil aircraft in air commerce by prescribing minimum standards required in the interest of safety for the design and performance of aircraft. This regulation is within the scope of that authority because it prescribes new safety standards for the design of part 23 normal, utility, acrobatic, and commuter category airplanes.

Accordingly, this proposed rule will amend Title 14 of the Code of Federal Regulations to address deficiencies in current regulations regarding the certification of part 23 light jets, turboprops and reciprocating engine airplanes. The proposed rule would clarify areas of frequent non-standardization and misinterpretation and codify certification requirements that currently exist in special conditions.

The FAA is unaware the proposed rule will overlap, duplicate, or conflict with existing Federal Rules.

We now discuss our methodology to determine the number of small entities for which the proposed rule will apply.

Under the RFA, the FAA must determine whether a proposed rule significantly affects a substantial number of small entities. This determination is typically based on small entity size and cost thresholds that vary depending on the affected industry.

Using the size standards from the Small Business Administration for Air Transportation and Aircraft Manufacturing, we defined companies as small entities if they have fewer than 1,500 employees.[6]

There are 11 U.S. aircraft manufacturers currently producing part 23 airplanes and could be affected by this proposal. These manufacturers are American Champion, Cessna, Cirrus, Eclipse, Hawker Beechcraft, Liberty, Maule, Mooney, Piper, Quest, and Sino Swearingen.

Using information provided by the World Aviation Directory, Internet filings and industry contacts, manufacturers that are subsidiary

[6] 13 CFR 121.201, Size Standards Used to Define Small Business Concerns, Sector 48–49 Transportation, Subsector 481 Air Transportation.

businesses of larger businesses, manufacturers that are foreign owned, and businesses with more than 1,500 employees were eliminated from the list of entities. Cessna and Hawker Beechcraft are businesses with more than 1,500 employees and Cirrus and Liberty are foreign owned. We found no source of employment or revenue data for American Champion. For the remaining businesses, we obtained company revenue and employment from the above sources.

The base year for the proposed rule is 2008. Although the FAA forecasts traffic and air carrier fleets, we can not determine the number of new entrants nor who will be in business in the future. Therefore we use current U.S. manufacturer's revenue and employment in order to determine the number of operators this proposal would affect.

The methodology discussed above resulted in the following six U.S. part 23 aircraft manufacturers, with less than 1,500 employees, shown in Table RF1.

TABLE RF1

Company	Employees	Annual revenue
Quest	60	$4,600,000
Maule	86	5,700,000
Piper	100	7,600,000
Mooney	400	42,083,000
Sino Swearingen	400	25,300,000
Eclipse	1,000	36,700,000

The majority of this proposal affects the certification of turbojets and has a minor affect on the certification of turboprop and reciprocating engine airplanes by clarifying frequent non-standardization and misinterpretations of the current part 23 rules.

From the list of part 23 small entity U.S. airplane manufacturers above, only Eclipse and Sino Swearingen produce turbojet airplanes and Piper and Quest produce turboprop airplanes. The remaining part 23 small entity U.S. airplane manufacturers produce reciprocating engine airplanes.

In the regulatory evaluation, we estimated that operators of newly certificated part 23 airplanes would incur additional fuel costs. Additionally, operators could incur costs from added weight and a reduced payload capacity. The U.S. Census Bureau data on the Small Business Administration's Web site shows an estimate of the total number of small business entities who could be affected if they purchase newly certificated part 23 airplanes.[7] The U.S. Census Bureau data lists 39,754 small entities in the Non-scheduled Air Transportation Industry that employ less than 500 employees. Many of these non-scheduled businesses are in part 25. Other small businesses may own aircraft and not be included in the U.S. Census Bureau Non-scheduled Air Transportation Industry category. The estimate of the affect of this proposal on the total number of small entities that operate part 23 airplanes is developed below.

We now discuss our methodology to estimate the costs of this proposal to the small entities part 23 airplane manufacturers and operators. We will also discuss why the FAA believes this proposed rule would not result in a significant economic impact to part 23 airplane manufacturers and operators.

In 2003, we published a notice (68 FR 5488) creating the part 125/135 Aviation Rulemaking Committee (ARC). FAA and the part 23 industry have worked together to develop common certification part 23 airplane requirements proposed in this rulemaking. We contacted the part 23 aircraft manufacturers, the ARC, and General Aviation Manufacturers Association (GAMA) (an industry association for part 23 aircraft manufacturers) for specific cost estimates for each proposed section change for this rule. Not every party we contacted responded to our request for costs. Many of the ARC members, from the domestic and international manufacturing community, collaborated and filed a joint cost estimate for this proposed rule. We are basing our cost estimates for this proposed rule from these part 23 U.S. aircraft manufacturers, ARC members and GAMA.

The part 23 U.S. airplane manufacturers, ARC members, and industry association informed us that this proposed rulemaking would add manufacturer certification costs for fire extinguishing systems, climb, and take-off warning systems. Industry informed us that this proposal would save the manufacturers design time for the certification of cockpit controls. Industry has also informed us that every other proposed section of this rule is either clarifying, error correcting, or would only add minimal to no costs.

The proposed rule adds certification requirements for the following part 23 airplane categories:

1. All turbojet airplanes,
2. All turbojet airplanes with a MTOW less than 6,000 pounds,
3. All turboprop airplanes,
4. All reciprocal engine airplanes, and
5. All reciprocal twin engine airplanes with a MTOW greater than 6,000 pounds.

In some cases the proposed regulations only affect part 23 airplanes operated in revenue service. Any part 23 airplane could be used as a business airplane to haul passengers and cargo in commercial service. We estimated the business versus personal use of a part 23 airplane by analyzing the number of all US-operated airplanes from Table 3.1 of the *2006 General Aviation and Part 135 Activity Survey.* Table 3.1 shows the breakout of the 2006 General Aviation fleet by business, corporate, instructional, aerial applications, aerial observations, aerial other, external load, other work, sight see, air medical, other, part 135 Air Taxi, Air Tours, and Air Medical airplane usage. For the purpose of estimating the cost of this proposal, we assume all business part 23 airplane operators from Table 3.1 of the *2006 General Aviation and Part 135 Activity Survey* would operate in Commuter service. Table RF2 shows these results.

[7] *http://www.sba.gov/advo/research/us05_n6.pdf.*

TABLE RF2—2006 GENERAL AVIATION AND PART 135 ACTIVITY SURVEY—TABLE 3.1

Aircraft type	Total active	Personal	% Personal	% Business
Piston	163,743	118,618	72.44	27.56
Turboprop	8,063	1,177	14.60	85.40
Turbojet	10,379	750	7.23	92.77

Table RF3 shows the results of the proposed sections that add (or subtract) incremental costs by increasing design or flight testing times, adds weight, or reducing payload.

TABLE RF3

		Certification		Flight Operation		Part 23 Airplane Categories Affected					
Part 23 Section	Section title	Design hours	Flight test hours	Additional weight	Payload reduction	Turbojet	Turbojet <6,000 # MTOW	Turbo-prop	Recip-rocal en-gine	Twin re-ciprocal engine >6,000 # MTOW	Category
23.1193(g), 23.1195(a), 23.1197, 23.1199, 23.1201.	Cowling and Nacelle, Fire Extinguisher Systems, Fire Extinguishing Agents, Extinguishing Agent Containers, Fire Extinguishing System Materials.	.....	50	25	.....	.....	.....	X	.....	.....	Commuter.
23.63, 23.67, 23.77.	Climb: General, Climb—One Engine, Balked Landing.	.....	.....	.....	10%	.....	X	X	.....	X	All.
23.703	Take-Off Warning System.	1,000	25	.....	.....	.....	X	X	.....	X	All.
23.777	Cockpit Controls	−25	.....	.....	.....	X	.....	X	X	.....	All.

We estimated part 23 airplane manufacturer fixed (added certification plus flight test hours) and operator variable (added fuel burn plus 10 percent reduction in payload) costs and applied our estimated costs to expected fleet delivered in compliance with this proposal. The total cost of this rule is the sum of the fixed certification cost plus the airplane fuel-burn variable cost multiplied by the expected fleet delivered over the analysis period.

The total fixed certification compliance cost equals the average compliance cost multiplied by the expected number of certifications of newly delivered part 23 turbojet, turboprop and reciprocating engine airplane. In the regulatory evaluation we estimated a base case and high case range for the certification costs. This range was based on the estimated number of new turbojet certifications. In the base case, we estimated five new turbojet certifications in the analysis interval. In the high case, we estimated eight new turbojet certifications. We will use the high cost case scenario for this analysis.

We estimated the certification costs for fire extinguishing systems, climb, and take-off warning systems. Based on the hours provided by the part 23 U.S. airplane manufacturers, ARC members and industry association and the *Economic Values For FAA Investment and Regulatory Decisions, A Guide* for the hourly rates.[8] Table RF4 shows the incremental certification costs estimate we calculated.

TABLE RF4—HIGH COST SCENARIO FOR PART 23 MANUFACTURERS

Costs	Recip	Commuter TP	TJ < 6,000
Design	$0	$152,020	$94,496
Design	(9,501)	(3,801)	(22,803)
Flight Test	0	114,400	93,489
Total High Cost	(9,501)	262,620	165,181
# Certifications	5	4	12
Cost per Cert	(1,900)	65,655	13,765

We applied the estimated incremental certification costs to the each of the small part 23 airplane manufacturing average number of historical certifications over a ten-year period. We then divided the small part 23 airplane

[8] *http://www.faa.gov/regulations_policies/policy_guidance/benefit_cost/media/050404%20Critical%20Values%20Dec%2031%20Report%2007Jan05.pdf.*

manufacturer's annual revenue by the incremental costs. Table RF5 shows these results.

TABLE RF5

Company	Employees	Annual revenue	Average # certs 10 years	Airplane certificated	Estimated cert cost	Percent
Quest	60	$4,600,000	1.00	Turboprop	$65,655	1.43
Maule	86	5,700,000	0.20	Recip	−380	−0.01
Piper	100	7,600,000	1.00 (Recip) + 33 (TP).	Recip + Turboprop	65,022	0.86
Mooney	400	42,083,000	0.17	Recip	−317	0.00
Sino Swearingen	400	25,300,000	1.00	Turbojet	13,765	0.05
Eclipse	1,000	36,700,00	1.00	Turbojet	13,765	0.04

We estimated that the incremental fixed certification cost this proposed rule would be less than one percent in five of the six small entity part 23 airplane manufacturers, and less than 1.5 percent in the remaining one. We do not believe these are significant economic costs. Further, we believe that the manufacturers of the part 23 airplanes would have additional costs savings associated with the proposal standardizes and streamlining the certification process. Additional costs savings of the proposed changes to parts 1 and 23 would be to eliminate the current workload of exemptions, special conditions, and equivalent levels of safety necessary to certificate part 23 turbojets and by clarifying frequent non-standardization and misinterpretations of current part 23 rules.

To estimate the incremental variable costs to a part 23 operator, we multiplied the annual per-unit fuel burn cost by the expected fleet delivered over the analysis interval.

In the regulatory evaluation, we estimated a minimal base and high case cost for the 10 percent loss in capacity occurs the operators may incur. The base case was a no cost scenario because the average GA airplane has about 3.7 seats and flies about half full.[9] The cargo load factor for all cargo carriers is 60 percent.[10] Therefore, we conclude that the 10 percent reduction in payload caused by the proposed sections on climb and balked landings could have a minimum cost impact on part 23 airplanes for the base case. For the high case we realize that a percentage of the part 23 airplanes, in commuter service, could have a load factor over 90 percent on some of their flights. Although we believe any capacity affected would be distributed over other flights in the operator's network, we estimate the cost of a 10 percent payload capacity reduction. Table RF6 shows the results of our calculations.

TABLE RF6

	Recip	TurboProp	Commuter TP	Total TJ	TJ<6,000
Base Case Cost	$0	$0	$8,430	$0	$0
High Case Cost	$0	$0	$1,413,692	$0	$3,086,919
Number of A/P	23,160	1,248	1,066	11,040	1,143
Base Case Cost / A/P	$0	$0	$8	$0	$0
High Case Cost / A/P	$0	$0	$1,326	$0	$2,700
A/P Value	$431,681	$3,389,054	$3,389,054	$6,300,000	$6,300,000
% Base of Value	0.00%	0.00%	0.00%	0.00%	0.00%
% High of Value	0.00%	0.00%	0.04%	0.00%	0.04%

For this proposal, our high case estimate for small business part 23 operators of turboprop airplanes would pay an additional $1,326 to operate a newly certificated airplane. Operators of newly certificated and delivered part 23 turbojet airplanes with a maximum take off weight less than 6,000 pounds would pay an additional $2,700 to operate a newly certificated airplane. Operators would not incur these costs unless they purchase a newly certificated part 23 airplane.

We do not believe that these proposals costs would be a significant impact to small entity operators because, even for the high-cost case, the compliance costs of this proposal to operators would only be 0.04 percent for a turboprop and 0.04 percent for a turbojet with a maximum take-off weight less than 6,000 pounds, of the price of a newly certificated airplane.

Therefore the FAA certifies that this proposed rule would not have a significant economic impact on a substantial number of small entities. The FAA solicits comments regarding this determination.

International Trade Impact Assessment

The Trade Agreements Act of 1979 (Pub. L. 96–39) prohibits Federal agencies from establishing any standards or engaging in related activities that create unnecessary obstacles to the foreign commerce of the United States. Legitimate domestic objectives, such as safety, are not considered unnecessary obstacles. The statute also requires consideration of international standards and, where appropriate, that they be the basis for U.S. standards. The FAA has assessed the potential effect of this final rule and has no basis for believing the rule will impose substantially different costs on domestic and international entities. Thus the FAA believes the rule has a neutral trade impact.

Unfunded Mandates Assessment

Title II of the Unfunded Mandates Reform Act of 1995 (Pub. L. 104–4) requires each Federal agency to prepare

[9] Table 3.15 of the *Economic Values For FAA Investment and Regulatory Decisions, A Guide*

[10] *Ibid.*

a written statement assessing the effects of any Federal mandate in a proposed or final agency rule that may result in an expenditure of $100 million or more (in 1995 dollars) in any one year by State, local, and tribal governments, in the aggregate, or by the private sector; such a mandate is deemed to be a ''significant regulatory action.'' The FAA currently uses an inflation-adjusted value of $136.1 million in lieu of $100 million. This proposed rule does not contain such a mandate; therefore, the requirements of Title II of the Act do not apply.

Executive Order 13132, Federalism

The FAA has analyzed this proposed rule under the principles and criteria of Executive Order 13132, Federalism. We determined that this action would not have a substantial direct effect on the States, on the relationship between the national Government and the States, or on the distribution of power and responsibilities among the various levels of government, and, therefore, would not have federalism implications.

Regulations Affecting Intrastate Aviation in Alaska

Section 1205 of the FAA Reauthorization Act of 1996 (110 Stat. 3213) requires the Administrator, when modifying regulations in Title 14, Code of Federal Regulations in a manner affecting intrastate aviation in Alaska, to consider the extent to which Alaska is not served by transportation modes other than aviation and to establish appropriate regulatory distinctions. Because this proposed rule would apply to the certification of future designs of transport category airplanes and their subsequent operation, it could, if adopted, affect intrastate aviation in Alaska. The FAA, therefore, specifically requests comments on whether there is justification for applying the proposed rule differently in intrastate operations in Alaska.

Environmental Analysis

FAA Order 1050.1E identifies FAA actions that are categorically excluded from preparation of an environmental assessment or environmental impact statement under the National Environmental Policy Act in the absence of extraordinary circumstances. The FAA has determined this proposed rulemaking action qualifies for the categorical exclusion identified in paragraph 312(f) and involves no extraordinary circumstances.

Regulations That Significantly Affect Energy Supply, Distribution, or Use

The FAA has analyzed this NPRM under Executive Order 13211, Actions Concerning Regulations that Significantly Affect Energy Supply, Distribution, or Use (May 18, 2001). We have determined that it is not a ''significant energy action'' under the executive order because while it is a ''significant regulatory action,'' it is not likely to have a significant adverse effect on the supply, distribution, or use of energy.

Additional Information

Comments Invited

The FAA invites interested persons to participate in this rulemaking by submitting written comments, data, or views. We also invite comments relating to the economic, environmental, energy, or federalism impacts that might result from adopting the proposals in this document. The most helpful comments reference a specific portion of the proposal, explain the reason for any recommended change, and include supporting data. To ensure the docket does not contain duplicate comments, please send only one copy of written comments, or if you are filing comments electronically, please submit your comments only one time.

We will file in the docket all comments we receive, as well as a report summarizing each substantive public contact with FAA personnel concerning this proposed rulemaking. Before acting on this proposal, we will consider all comments we receive on or before the closing date for comments. We will consider comments filed after the comment period has closed if it is possible to do so without incurring expense or delay. We may change this proposal in light of the comments we receive.

Proprietary or Confidential Business Information

Do not file in the docket information that you consider to be proprietary or confidential business information. Send or deliver this information directly to the person identified in the **FOR FURTHER INFORMATION CONTACT** section of this document. You must mark the information that you consider proprietary or confidential. If you send the information on a disk or CD ROM, mark the outside of the disk or CD ROM, and also identify electronically within the disk or CD ROM the specific information that is proprietary or confidential.

Under 14 CFR 11.35(b), when we are aware of proprietary information filed with a comment, we do not place it in the docket. We hold it in a separate file to which the public does not have access, and we place a note in the docket that we have received it. If we receive a request to examine or copy this information, we treat it as any other request under the Freedom of Information Act (5 U.S.C. 552). We process such a request under the DOT procedures found in 49 CFR part 7.

Availability of Rulemaking Documents

You can get an electronic copy of rulemaking documents using the Internet by—

1. Searching the Federal eRulemaking Portal (*http://www.regulations.gov*);
2. Visiting the FAA's Regulations and Policies web page at *http://www.faa.gov/regulations_policies/;* or
3. Accessing the Government Printing Office's Web page at *http://www.gpoaccess.gov/fr/index.html.*

You can also get a copy by sending a request to the Federal Aviation Administration, Office of Rulemaking, ARM–1, 800 Independence Avenue SW., Washington, DC 20591, or by calling 202–267–9680. Make sure to identify the docket number or notice number of this rulemaking.

You may access all documents the FAA considered in developing this proposed rule, including economic analyses and technical reports, from the Internet through the Federal eRulemaking Portal referenced in paragraph (1).

List of Subjects

14 CFR Part 1

Air transportation.

14 CFR Part 23

Aviation Safety, Signs, Symbols, Aircraft.

The Proposed Amendments

In consideration of the foregoing, the Federal Aviation Administration proposes to amend Chapter I of Title 14, Code of Federal Regulations, as follows:

PART 1—DEFINITIONS AND ABBREVIATIONS

1. The authority citation for part 1 continues to read as follows:

Authority: 49 U.S.C. 106(g), 40113, 44701.

2. Revise the definitions of ''Rated takeoff power'' and ''Rated takeoff thrust'' and add the definitions of ''Turbine engine'', ''Turbojet engine'', and ''Turboprop engine'' in alphabetical order in § 1.1 to read as follows:

§ 1.1 General definitions.

* * * * *

Rated takeoff power, with respect to reciprocating, turbopropeller, and turboshaft engine type certification, means the approved brake horsepower that is developed statically under standard sea level conditions, within the engine operating limitations established under part 33 of this chapter, and limited in use—

(1) To periods of not more than 5 minutes for takeoff operations with reciprocating, turbopropeller, and turboshaft engines; and

(2) When specifically requested by the engine manufacturer, to periods of not more than 10 minutes for one-engine-inoperative takeoff operations with turbopropeller engines.

Rated takeoff thrust, with respect to turbojet engine type certification, means the approved turbojet thrust that is developed statically under standard sea level conditions, without fluid injection and without the burning of fuel in a separate combustion chamber, within the engine operating limitations established under part 33 of this chapter, and limited in use—

(1) To periods of not more than 5 minutes for takeoff operations; and

(2) When specifically requested by the engine manufacturer, to periods of not more than 10 minutes for one-engine-inoperative takeoff operations.

* * * * *

Turbine engine, with respect to part 23 airplane type certification, consists of an air compressor, a combustion section, and a turbine. Thrust is produced by increasing the velocity of the air flowing through the engine.

Turbojet engine, with respect to part 23 airplane type certification, is a turbine engine which produces its thrust entirely by accelerating the air through the engine.

Turboprop engine, with respect to part 23 airplane type certification, is a turbine engine which drives a propeller through a reduction gearing arrangement. Most of the energy in the exhaust gases is converted into torque, rather than using its acceleration to drive the airplane.

* * * * *

PART 23—AIRWORTHINESS STANDARDS: NORMAL, UTILITY, ACROBATIC, AND COMMUTER CATEGORY AIRPLANES

3. The authority citation for part 23 continues to read as follows:

Authority: 49 U.S.C. 106(g), 40113, 44701–44702, 44704.

4. Amend § 23.3 by revising the first sentence in paragraph (d) to read as follows:

§ 23.3 Airplane categories.

* * * * *

(d) The commuter category is limited to multiengine airplanes that have a seating configuration, excluding pilot seats, of 19 or less, and a maximum certificated takeoff weight of 19,000 pounds or less. * * *

* * * * *

5. Amend § 23.45 by revising the introductory text of paragraph (h) to read as follows:

§ 23.45 General.

* * * * *

(h) For multiengine turbojet powered airplanes over 6,000 pounds in the normal, utility, and acrobatic category and commuter category airplanes the following also apply:

* * * * *

6. Amend § 23.49 by revising the section heading and the introductory text of paragraphs (a) and (c) to read as follows:

§ 23.49 Stalling speed.

(a) V_{SO} (maximum landing flap configuration) and V_{S1} are the stalling speeds or the minimum steady flight speeds, in knots (CAS), at which the airplane is controllable with—

* * *

(c) Except as provided in paragraph (d) of this section, V_{SO} at maximum weight may not exceed 61 knots for—

* * * * *

7. Amend § 23.51 by revising paragraph (b)(1) introductory text and paragraph (c) introductory text to read as follows:

§ 23.51 Takeoff speeds.

* * * * *

(b) * * *

(1) For multiengine airplanes, the highest of—

* * *

(c) For normal, utility, and acrobatic category multiengine turbojet airplanes of more than 6,000 pounds maximum weight and commuter category airplanes, the following apply:

* * * * *

8. Amend § 23.53 by revising paragraph (c) to read as follows:

§ 23.53 Takeoff performance.

* * * * *

(c) For normal, utility, and acrobatic category multiengine turbojet airplanes of more than 6,000 pounds maximum weight and commuter category airplanes, takeoff performance, as required by §§ 23.55 through 23.59, must be determined with the operating engine(s) within approved operating limitations.

9. Amend § 23.55 by revising the introductory text to read as follows:

§ 23.55 Accelerate-stop distance.

For normal, utility, and acrobatic category multiengine turbojet airplanes of more than 6,000 pounds maximum weight and commuter category airplanes, the accelerate-stop distance must be determined as follows:

* * * * *

10. Amend § 23.57 by revising the introductory text to read as follows:

§ 23.57 Takeoff path.

For normal, utility, and acrobatic category multiengine turbojet airplanes of more than 6,000 pounds maximum weight and commuter category airplanes, the takeoff path is as follows:

* * * * *

11. Amend § 23.59 by revising the introductory text to read as follows:

§ 23.59 Takeoff distance and takeoff run.

For normal, utility, and acrobatic category multiengine turbojet airplanes of more than 6,000 pounds maximum weight and commuter category airplanes, the takeoff distance and, at the option of the applicant, the takeoff run, must be determined.

* * * * *

12. Amend § 23.61 by revising the introductory text to read as follows:

§ 23.61 Takeoff flight path.

For normal, utility, and acrobatic category multiengine turbojet airplanes of more than 6,000 pounds maximum weight and commuter category airplanes, the takeoff flight path must be determined as follows:

* * * * *

13. Amend § 23.63 by revising the introductory text of paragraphs (c) and (d) to read as follows:

§ 23.63 Climb: General.

* * * * *

(c) For reciprocating engine-powered airplanes of more than 6,000 pounds maximum weight, single-engine turbines, and multiengine turbine airplanes of 6,000 pounds or less maximum weight in the normal, utility, and acrobatic category, compliance must be shown at weights as a function of airport altitude and ambient temperature, within the operational limits established for takeoff and landing, respectively, with—

* * * * *

(d) For multiengine turbine airplanes over 6,000 pounds maximum weight in the normal, utility, and acrobatic category and commuter category airplanes, compliance must be shown at weights as a function of airport altitude

and ambient temperature within the operational limits established for takeoff and landing, respectively, with—

* * * * *

14. Amend § 23.67 by:

a. Revising paragraph (b) introductory text and (b)(1) introductory text;

b. Redesignating paragraph (c) as paragraph (d)

c. Revising newly redesignated paragraph (d) introductory text, paragraph (d)(2) introductory text, paragraph (d)(3) introductory text, and paragraph (d)(4) introductory text; and

d. Adding new paragraph (c).

The revisions and addition read as follows:

§ 23.67 Climb: One-engine inoperative.

* * * * *

(b) For normal, utility, and acrobatic category reciprocating engine-powered airplanes of more than 6,000 pounds maximum weight, and turbopropeller-powered airplanes in the normal, utility, and acrobatic category—

(1) The steady gradient of climb at an altitude of 400 feet above the takeoff may be no less than 1 percent with the—

* * * * *

(c) For normal, utility, and acrobatic category turbojet engine-powered airplanes of 6,000 pounds or less maximum weight—

(1) The steady gradient of climb at an altitude of 400 feet above the takeoff may be no less than 1.2 percent with the—

(i) Critical engine inoperative;

(ii) Remaining engine(s) at takeoff power;

(iii) Landing gear retracted;

(iv) Wing flaps in the takeoff position(s); and

(v) Climb speed equal to that achieved at 50 feet in the demonstration of § 23.53.

(2) The steady gradient of climb may not be less than 0.75 percent at an altitude of 1,500 feet above the takeoff surface, or landing surface, as appropriate, with the—

(i) Critical engine inoperative:

(ii) Remaining engine(s) at not more than maximum continuous power;

(iii) Landing gear retracted;

(iv) Wing flaps retracted; and

(v) Climb speed not less than 1.2 V_{S1}.

(d) For turbojet powered airplanes over 6,000 pounds maximum weight in the normal, utility and acrobatic category and commuter category airplanes, the following apply:

* * * * *

(2) *Takeoff; landing gear retracted.* The steady gradient of climb at an altitude of 400 feet above the takeoff surface must be at least 2.0 percent of two-engine airplanes, 2.3 percent for three-engine airplanes, and 2.6 percent for four-engine airplanes with—

* * * * *

(3) *Enroute.* The steady gradient of climb at an altitude of 1,500 feet above the takeoff or landing surface, as appropriate, must be at least 1.2 percent for two-engine airplanes, 1.5 percent for three-engine airplanes, and 1.7 percent for four-engine airplanes with—

* * * * *

(4) *Discontinued approach.* The steady gradient of climb at an altitude of 400 feet above the landing surface must be at least 2.1 percent for two-engine airplanes, 2.4 percent for three-engine airplanes, and 2.7 percent for four-engine airplanes, with—

* * * * *

15. Revise § 23.73 to read as follows:

§ 23.73 Reference landing approach speed.

(a) For normal, utility, and acrobatic category reciprocating engine-powered airplanes of 6,000 pounds or less maximum weight, the reference landing approach speed, V_{REF}, may not be less than the greater of V_{MC}, determined in § 23.149(b) with the wing flaps in the most extended takeoff position, and 1.3 V_{S1}.

(b) For normal, utility, and acrobatic category turbine powered airplanes of 6,000 pounds or less maximum weight, turboprops of more than 6,000 pounds maximum weight, and reciprocating engine-powered airplanes of more than 6,000 pounds maximum weight, the reference landing approach speed, V_{REF}, may not be less than the greater of V_{MC}, determined in § 23.149(c), and 1.3 V_{S1}.

(c) For normal, utility, and acrobatic category turbojet engine-powered airplanes of more than 6,000 pounds maximum weight and commuter category airplanes, the reference landing approach speed, V_{REF}, may not be less than the greater of 1.05 V_{MC}, determined in § 23.149(c), and 1.3 V_{S1}.

16. Amend § 23.77 by revising the introductory text of paragraphs (b) and (c) to read as follows:

§ 23.77 Balked landing.

* * * * *

(b) Each normal, utility, and acrobatic category reciprocating engine-powered and single engine turbine powered airplane of more than 6,000 pounds maximum weight, and multiengine turbine engine-powered airplane of 6,000 pounds or less maximum weight in the normal, utility, and acrobatic category must be able to maintain a steady gradient of climb of at least 2.5 percent with—

* * * * *

(c) Each normal, utility, and acrobatic multiengine turbine powered airplane over 6,000 pounds maximum weight and each commuter category airplane must be able to maintain a steady gradient of climb of at least 3.2 percent with—

* * * * *

17. Amend § 23.175 by adding a new paragraph (b)(3) to read as follows:

§ 23.175 Demonstration of static longitudinal stability.

* * * * *

(b) * * *

(3) *Maximum speed for stability characteristics, V_{FC}/M_{FC}.* V_{FC}/M_{FC} may not be less than a speed midway between V_{MO}/M_{MO} and V_{DF}/M_{DF} except that, for altitudes where Mach number is the limiting factor, M_{FC} need not exceed the Mach number at which effective speed warning occurs.

* * * * *

18. Amend § 23.177 by revising paragraphs (a), (b), and (d) to read as follows:

§ 23.177 Static directional and lateral stability.

(a)(1) The static directional stability, as shown by the tendency to recover from a wings level sideslip with the rudder free, must be positive for any landing gear and flap position appropriate to the takeoff, climb, cruise, approach, and landing configurations. This must be shown with symmetrical power up to maximum continuous power, and at speeds from 1.2 V_{S1} up to the landing gear or wing flap operating limit speeds, or V_{NO} or V_{FC}/M_{FC}, whichever is appropriate.

(2) The angle of sideslip for these tests must be appropriate to the type of airplane. The rudder pedal force may not reverse at larger angles of sideslip, up to that at which full rudder is used or a control force limit in § 23.143 is reached, whichever occurs first, and at speeds from 1.2 V_{S1} to V_O.

(b)(1) The static lateral stability, as shown by the tendency to raise the low wing in a sideslip with the aileron controls free, may not be negative for any landing gear and flap position appropriate to the takeoff, climb, cruise, approach, and landing configurations. This must be shown with symmetrical power from idle up to 75 percent of maximum continuous power at speeds from 1.2 V_{S1} in the takeoff configuration(s) and at speeds from 1.3 V_{S1} in other configurations, up to the maximum allowable airspeed for the configuration being investigated, (V_{FE},

V_{LE}, V_{NO}, V_{FC}/M_{FC}, whichever is appropriate) in the takeoff, climb, cruise, descent, and approach configurations. For the landing configuration, the power must be that necessary to maintain a 3-degree angle of descent in coordinated flight.

(2) The static lateral stability may not be negative at 1.2 V_{S1} in the takeoff configuration, or at 1.3 V_{S1} in other configurations.

(3) The angle of sideslip for these tests must be appropriate to the type of airplane, but in no case may the constant heading sideslip angle be less than that obtainable with a 10 degree bank or, if less, the maximum bank angle obtainable with full rudder deflection or 150 pound rudder force.

* * * * *

(d)(1) In straight, steady slips at 1.2 V_{S1} for any landing gear and flap position appropriate to the takeoff, climb, cruise, approach, and landing configurations, and for any symmetrical power conditions up to 50 percent of maximum continuous power, the aileron and rudder control movements and forces must increase steadily, but not necessarily in constant proportion, as the angle of sideslip is increased up to the maximum appropriate to the type of airplane.

(2) At larger slip angles, up to the angle at which the full rudder or aileron control is used or a control force limit contained in § 23.143 is reached, the aileron and rudder control movements and forces may not reverse as the angle of sideslip is increased.

(3) Rapid entry into, and recovery from, a maximum sideslip considered appropriate for the airplane may not result in uncontrollable flight characteristics.

19. Amend § 23.181 by revising paragraph (b) to read as follows:

§ 23.181 Dynamic stability.

* * * * *

(b) Any combined lateral-directional oscillations (''Dutch roll'') occurring between the stalling speed and the maximum allowable speed appropriate to the configuration of the airplane with the primary controls in both free and fixed position, must be damped to 1/10 amplitude in:

(1) Seven (7) cycles below 18,000 feet, and

(2) Thirteen (13) cycles from 18,000 feet to the certified maximum altitude.

* * * * *

20. Amend § 23.201 by revising paragraphs (d) and (e) and by adding a new paragraph (f) to read as follows:

§ 23.201 Wings level stall.

* * * * *

(d) During the entry into and the recovery from the maneuver, it must be possible to prevent more than 15 degrees of roll or yaw by the normal use of controls except as provided for in paragraph (e) of this section.

(e) For airplanes approved with a maximum operating altitude above 25,000 feet, during the entry into and the recovery from stalls performed above 25,000 feet, it must be possible to prevent more than 25 degrees of roll or yaw by the normal use of controls.

(f) Compliance with the requirements of this section must be shown under the following conditions:

(1) *Wing flaps:* Retracted, fully extended, and each intermediate normal operating position, as appropriate for the phase of flight.

(2) *Landing gear:* Retracted and extended as appropriate for the altitude.

(3) *Cowl flaps:* Appropriate to configuration.

(4) *Spoilers/speedbrakes:* Retracted and extended unless they have little to no effect at low speeds.

(5) *Power:*

(i) Power/Thrust off; and

(ii) For reciprocating engine powered airplanes: 75 percent maximum continuous power. However, if the power-to-weight ratio at 75 percent of maximum continuous power results in nose-high attitudes exceeding 30 degrees, the test must be carried out with the power required for level flight in the landing configuration at maximum landing weight and a speed of 1.4 V_{SO}, except that the power may not be less than 50 percent of maximum continuous power; or

(iii) For turbine engine powered airplanes: The maximum engine thrust, except that it need not exceed the thrust necessary to maintain level flight at 1.6 V_{S1} (where V_{S1} corresponds to the stalling speed with flaps in the approach position, the landing gear retracted, and maximum landing weight).

(6) *Trim* at 1.5 V_{S1} or the minimum trim speed, whichever is higher.

(7) *Propeller:* Full increase r.p.m. position for the power off condition.

21. Amend § 23.203 by revising paragraph (c) to read as follows:

§ 23.203 Turning flight and accelerated turning stalls.

* * * * *

(c) Compliance with the requirements of this section must be shown under the following conditions:

(1) *Wings flaps:* Retracted, fully extended, and each intermediate normal operating position as appropriate for the phase of flight.

(2) *Landing gear:* Retracted and extended as appropriate for the altitude.

(3) *Cowl flaps:* Appropriate to configuration.

(4) *Spoilers/speedbrakes:* Retracted and extended unless they have little to no effect at low speeds.

(5) *Power:*

(i) Power/Thrust off; and

(ii) For reciprocating engine powered airplanes: 75 percent maximum continuous power. However, if the power-to-weight ratio at 75 percent of maximum continuous power results in nose-high attitudes exceeding 30 degrees, the test may be carried out with the power required for level flight in the landing configuration at maximum landing weight and a speed of 1.4 V_{SO}, except that the power may not be less than 50 percent of maximum continuous power; or

(iii) For turbine engine powered airplanes: The maximum engine thrust, except that it need not exceed the thrust necessary to maintain level flight at 1.6 V_{S1} (where V_{S1} corresponds to the stalling speed with flaps in the approach position, the landing gear retracted, and maximum landing weight).

(6) *Trim:* The airplane trimmed at 1.5 V_{S1}.

(7) *Propeller:* Full increase rpm position for the power off condition.

22. Revise § 23.251 to read as follows:

§ 23.251 Vibration and buffeting.

(a) There may be no vibration or buffeting severe enough to result in structural damage, and each part of the airplane must be free from excessive vibration, under any appropriate speed and power conditions up to V_D/M_D, or V_{DF}/M_{DF} for turbojets. In addition, there may be no buffeting in any normal flight condition, including configuration changes during cruise, severe enough to interfere with the satisfactory control of the airplane or cause excessive fatigue to the flight crew. Stall warning buffeting within these limits is allowable.

(b) There may be no perceptible buffeting condition in the cruise configuration in straight flight at any speed up to V_{MO}/M_{MO}, except stall buffeting, which is allowable.

(c) For airplanes with M_D greater than M 0.6 and a maximum operating altitude greater than 25,000 feet, the positive maneuvering load factors at which the onset of perceptible buffeting occurs must be determined with the airplane in the cruise configuration for the ranges of airspeed or Mach number, weight, and altitude for which the airplane is to be certificated. The envelopes of load factor, speed, altitude, and weight must provide a sufficient range of speeds and load factors for

normal operations. Probable inadvertent excursions beyond the boundaries of the buffet onset envelopes may not result in unsafe conditions.

23. Amend § 23.253 by revising paragraphs (b)(1) and (b)(2), and by adding a new paragraph (b)(3) to read as follows:

§ 23.253 High speed characteristics.

* * * * *

(b) * * *

(1) Exceptional piloting strength or skill;

(2) Exceeding V_D/M_D, or V_{DF}/M_{DF} for turbojet, the maximum speed shown under § 23.251, or the structural limitations; and

(3) Buffeting that would impair the pilot's ability to read the instruments or to control the airplane for recovery.

* * * * *

24. Section 23.255 is added to subpart B to read as follows:

§ 23.255 Out of trim characteristics.

For airplanes with an M_D greater than M 0.6 and that incorporate a trimmable horizontal stabilizer, the following requirements for out-of-trim characteristics apply:

(a) From an initial condition with the airplane trimmed at cruise speeds up to V_{MO}/M_{MO}, the airplane must have satisfactory maneuvering stability and controllability with the degree of out-of-trim in both the airplane nose-up and nose-down directions, which results from the greater of the following:

(1) A three-second movement of the longitudinal trim system at its normal rate for the particular flight condition with no aerodynamic load (or an equivalent degree of trim for airplanes that do not have a power-operated trim system), except as limited by stops in the trim system, including those required by § 23.655(b) for adjustable stabilizers; or

(2) The maximum mis-trim that can be sustained by the autopilot while maintaining level flight in the high speed cruising condition.

(b) In the out-of-trim condition specified in paragraph (a) of this section, when the normal acceleration is varied from +l g to the positive and negative values specified in paragraph (c) of this section, the following apply:

(1) The stick force versus g curve must have a positive slope at any speed up to and including V_{FC}/M_{FC}; and

(2) At speeds between V_{FC}/M_{FC} and V_{DF}/M_{DF}, the direction of the primary longitudinal control force may not reverse.

(c) Except as provided in paragraphs (d) and (e) of this section, compliance with the provisions of paragraph (a) of this section must be demonstrated in flight over the acceleration range as follows:

(1) −1 g to +2.5g; or

(2) 0 g to 2.0g, and extrapolating by an acceptable method to −1g and +2.5g.

(d) If the procedure set forth in paragraph (c)(2) of this section is used to demonstrate compliance and marginal conditions exist during flight test with regard to reversal of primary longitudinal control force, flight tests must be accomplished from the normal acceleration at which a marginal condition is found to exist to the applicable limit specified in paragraph (b)(1) of this section.

(e) During flight tests required by paragraph (a) of this section, the limit maneuvering load factors, prescribed in §§ 23.333(b) and 23.337, need not be exceeded. In addition, the entry speeds for flight test demonstrations at normal acceleration values less than 1g must be limited to the extent necessary to accomplish a recovery without exceeding V_{DF}/M_{DF}.

(f) In the out-of-trim condition specified in paragraph (a) of this section, it must be possible from an overspeed condition at V_{DF}/M_{DF} to produce at least 1.5g for recovery by applying not more than 125 pounds of longitudinal control force using either the primary longitudinal control alone or the primary longitudinal control and the longitudinal trim system. If the longitudinal trim is used to assist in producing the required load factor, it must be shown at V_{DF}/M_{DF} that the longitudinal trim can be actuated in the airplane nose-up direction with the primary surface loaded to correspond to the least of the following airplane nose-up control forces:

(1) The maximum control forces expected in service, as specified in §§ 23.301 and 23.397.

(2) The control force required to produce 1.5g.

(3) The control force corresponding to buffeting or other phenomena of such intensity that it is a strong deterrent to further application of primary longitudinal control force.

25. Amend § 23.561 by adding new paragraphs (e)(1) and (e)(2) to read as follows:

§ 23.561 General.

* * * * *

(e) * * *

(1) For turbojet engines mounted inside the fuselage, aft of the cabin, it must be shown by test or analysis that the engine and attached accessories, and the engine mounting structure—

(i) Can withstand a forward acting static ultimate inertia load factor of 18.0g plus the maximum takeoff engine thrust; or

(ii) The airplane structure is designed to deflect the engine and its attached accessories away from the cabin should the engine mounts fail.

(2) [Reserved]

26. Amend § 23.562 by revising paragraphs (a) introductory text, (b) introductory text, and (c)(5)(ii) to read as follows:

§ 23.562 Emergency landing dynamic conditions.

(a) Each seat/restraint system for use in a normal, utility, or acrobatic category airplane, or in a commuter category turbojet powered airplane, must be designed to protect each occupant during an emergency landing when—

* * * * *

(b) Except for those seat/restraint systems that are required to meet paragraph (d) of this section, each seat/restraint system for crew or passenger occupancy in a normal, utility, or acrobatic category airplane, or in a commuter category turbojet powered airplane, must successfully complete dynamic tests or be demonstrated by rational analysis supported by dynamic tests, in accordance with each of the following conditions. These tests must be conducted with an occupant simulated by an anthropomorphic test dummy (ATD) defined by 49 CFR part 572, subpart B, or an FAA-approved equivalent, with a nominal weight of 170 pounds and seated in the normal upright position.

* * * * *

(c) * * *

(5) * * *

(ii) The value of HIC is defined as—

$$HIC = \left\{ (t_2 - t_1) \left[\frac{1}{(t_2 - t_1)} \int_{t1}^{t2} a(t)\, dt \right]^{2.5} \right\}_{Max}$$

Where:

t_1 is the initial integration time, expressed in seconds, t_2 is the final integration time, expressed in seconds, and a(t) is the total acceleration vs. time curve for the head expressed as a multiple of g (units of gravity).

* * * * *

27. Amend § 23.571 by adding a new paragraph (d) to read as follows:

§ 23.571 Metallic pressurized cabin structures.

* * * * *

(d) If certification for operation above 41,000 feet is requested, a damage tolerance evaluation of the fuselage pressure boundary per § 23.573(b) must be conducted and the evaluation must factor in the environmental requirements of § 23.841.

28. Amend § 23.573 by adding a new paragraph (c) to read as follows:

§ 23.573 Damage tolerance and fatigue evaluation of structure.

* * * * *

(c) If certification for operation above 41,000 feet is requested, the damage tolerance evaluation of this paragraph for the fuselage pressure boundary must factor in the requirements of § 23.841.

29. Amend § 23.574 by adding a new paragraph (c) to read as follows:

§ 23.574 Metallic damage tolerance and fatigue evaluation of commuter category airplanes.

* * * * *

(c) If certification for operation above 41,000 feet is requested, the damage tolerance evaluation of this paragraph for the fuselage pressure boundary must factor in the requirements of § 23.841.

30. Amend § 23.629 by revising paragraphs (b)(1), (b)(3), (b)(4), and (c) to read as follows:

§ 23.629 Flutter.

* * * * *

(b) * * *

(1) Proper and adequate attempts to induce flutter have been made within the speed range up to V_D/M_D;

* * * * *

(3) A proper margin of damping exists at V_D/M_D, or V_{DF}/M_{DF} for turbojet airplanes; and

(4) As V_D/M_D (or V_{DF}/M_{DF} for turbojet airplanes) is approached, there may not be a large or rapid reduction in damping.

(c) Any rational analysis used to predict freedom from flutter, control reversal and divergence must cover all speeds up to 1.2 V_D/M_D, or 1.2 V_{DF}/M_{DF} for turbojet airplanes.

* * * * *

31. Amend § 23.703 by revising the introductory text and paragraph (b) to read as follows:

§ 23.703 Takeoff warning system.

For all airplanes with a maximum weight more than 6,000 pounds and all turbojet airplanes, unless it can be shown that a lift or longitudinal trim device that affects the takeoff performance of the airplane would not give an unsafe takeoff configuration when selected out of an approved takeoff position, a takeoff warning system must be installed and meet the following requirements:

* * * * *

(b) For the purpose of this section, an unsafe takeoff configuration is the inability to rotate or the inability to prevent an immediate stall after rotation.

32. Amend § 23.735 by revising paragraph (e) to read as follows:

§ 23.735 Brakes.

* * * * *

(e) For airplanes required to meet § 23.55, the rejected takeoff brake kinetic energy capacity rating of each main wheel brake assembly may not be less than the kinetic energy absorption requirements determined under either of the following methods—

(1) The brake kinetic energy absorption requirements must be based on a conservative rational analysis of the sequence of events expected during a rejected takeoff at the design takeoff weight.

(2) Instead of a rational analysis, the kinetic energy absorption requirements for each main wheel brake assembly may be derived from the following formula—

$$KE = 0.0443\ WV^2/N$$

Where:

KE = Kinetic energy per wheel (ft.-lbs.);

W = Design takeoff weight (lbs.);

V = Ground speed, in knots, associated with the maximum value of V_1 selected in accordance with § 23.51(c)(1);

N = Number of main wheels with brakes.

33. Amend § 23.777 by revising paragraph (d) to read as follows:

§ 23.777 Cockpit controls.

* * * * *

(d) When separate and distinct control levers are co-located (such as located together on the pedestal), the control location order from left to right must be power (thrust) lever, propeller (rpm control), and mixture control (condition lever and fuel cut-off for turbine-powered airplanes). Power (thrust) levers must be at least one inch higher or longer than propeller (rpm control) or mixture controls to make them more prominent. Carburetor heat or alternate air control must be to the left of the throttle or at least eight inches from the mixture control when located other than on a pedestal. Carburetor heat or alternate air control, when located on a pedestal, must be aft or below the power (thrust) lever. Supercharger controls must be located below or aft of the propeller controls. Airplanes with tandem seating or single-place airplanes may utilize control locations on the left side of the cabin compartment; however, location order from left to right must be power (thrust) lever, propeller (rpm control), and mixture control.

* * * * *

34. Amend § 23.807 by adding a new paragraph (e)(3) to read as follows:

§ 23.807 Emergency exits.

* * * * *

(e) * * *

(3) In lieu of paragraph (e)(2) of this section, if any side exit or exits cannot be above the waterline, a device may be placed at each of such exit(s) prior to ditching. This device must slow the inflow of water when such exit(s) is opened with the airplane in a ditching emergency. For commuter category airplanes, the clear opening of such exit or exits must meet the requirements defined in paragraph (d) of this section.

35. Amend § 23.831 by adding paragraphs (c) and (d) to read as follows:

§ 23.831 Ventilation.

* * * * *

(c) For turbojet powered pressurized airplanes, under normal operating conditions and in the event of any probable failure conditions of any system which would adversely affect the ventilating air, the ventilation system must provide reasonable passenger comfort. The ventilation system must also provide a sufficient amount of uncontaminated air to enable the crew members to perform their duties without undue discomfort or fatigue and to provide reasonable passenger comfort. For normal operating conditions, the ventilation system must be designed to provide each occupant with at least 0.55 pounds of fresh air per minute. In the event of the loss of one source of fresh air, the supply of fresh airflow must not be less than 0.4 pounds per minute for any period exceeding five minutes.

(d) Other probable and improbable Environmental Control System failure conditions that adversely affect the passenger and crew compartment environmental conditions may not affect crew performance so as to result in a hazardous condition, and no occupant shall sustain permanent physiological harm.

36. Amend § 23.841 by revising paragraphs (a) and (b)(6), and by adding paragraphs (c), (d), and (e) to read as follows:

§ 23.841 Pressurized cabins.

(a) If certification for operation above 25,000 feet is requested, the airplane must be able to maintain a cabin pressure altitude of not more than 15,000 feet, in the event of any probable failure condition in the pressurization system. During the decompression, the cabin altitude shall not exceed 15,000 feet for more than 10 seconds and 25,000 feet for any duration.

(b) * * *

(6) Warning indication at the pilot station to indicate when the safe or preset pressure differential is exceeded and when a cabin pressure altitude of 10,000 feet is exceeded. The 10,000 foot cabin altitude warning may be increased up to 15,000 feet for operations from high altitude airfields (10,000 to 15,000 feet) provided:

(i) The landing or the take off modes (normal or high altitude) are clearly indicated to the flight crew.

(ii) Selection of normal or high altitude airfield mode requires no crew action beyond normal pressurization system operation.

(iii) The pressurization system is designed to ensure cabin altitude does not exceed 10,000 feet when in flight above flight level (FL) 250.

(iv) The pressurization system and cabin altitude warning system is designed to ensure cabin altitude warning at 10,000 feet when in flight above FL250.

* * * * *

(c) If certification for operation above 41,000 feet and not more than 45,000 feet is requested,

(1) The airplane must prevent cabin pressure altitude from exceeding the following after decompression from any probable pressurization system failure in conjunction with any undetected, latent pressurization system failure condition:

(i) If depressurization analysis shows that the cabin altitude does not exceed 25,000 feet, the pressurization system must prevent the cabin altitude from exceeding the cabin altitude-time history shown in Figure 1 of this section.

(ii) Maximum cabin altitude is limited to 30,000 feet. If cabin altitude exceeds 25,000 feet, the maximum time the cabin altitude may exceed 25,000 feet is 2 minutes; time starting when the cabin altitude exceeds 25,000 feet and ending when it returns to 25,000 feet.

(2) The airplane must prevent cabin pressure altitude from exceeding the following after decompression from any single pressurization system failure in conjunction with any probable fuselage damage:

(i) If depressurization analysis shows that the cabin altitude does not exceed 37,000 feet, the pressurization system must prevent the cabin altitude from exceeding the cabin altitude-time history shown in Figure 2 of this section.

(ii) Maximum cabin altitude is limited to 40,000 feet. If cabin altitude exceeds 37,000 feet, the maximum time the cabin altitude may exceed 25,000 feet is 2 minutes; time starting when the cabin altitude exceeds 25,000 feet and ending when it returns to 25,000 feet.

(3) In showing compliance with paragraphs (c)(1) and (c)(2) of this section, it may be assumed that an emergency descent is made by an approved emergency procedure. A 17-second crew recognition and reaction time must be applied between cabin altitude warning and the initiation of an emergency descent. Fuselage structure, engine and system failures are to be considered in evaluating the cabin decompression.

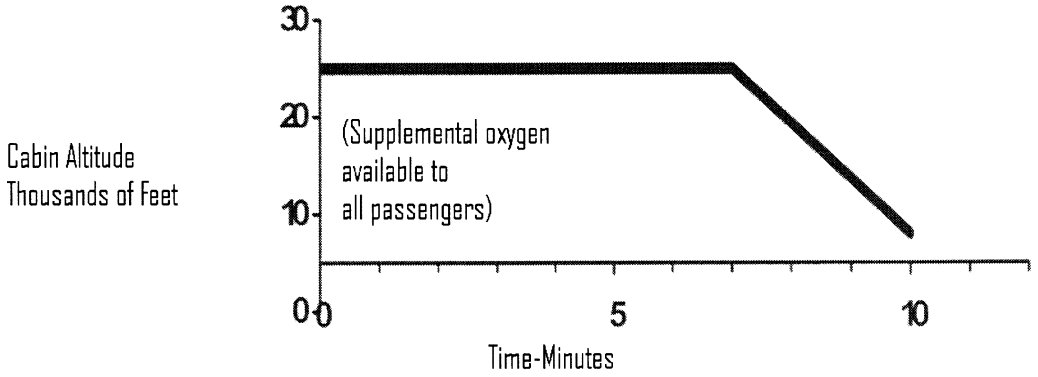

FIGURE 1—Cabin Altitude--Time History

Note: For Figure 1, time starts at the moment cabin altitude exceeds 10,000 feet during decompression.

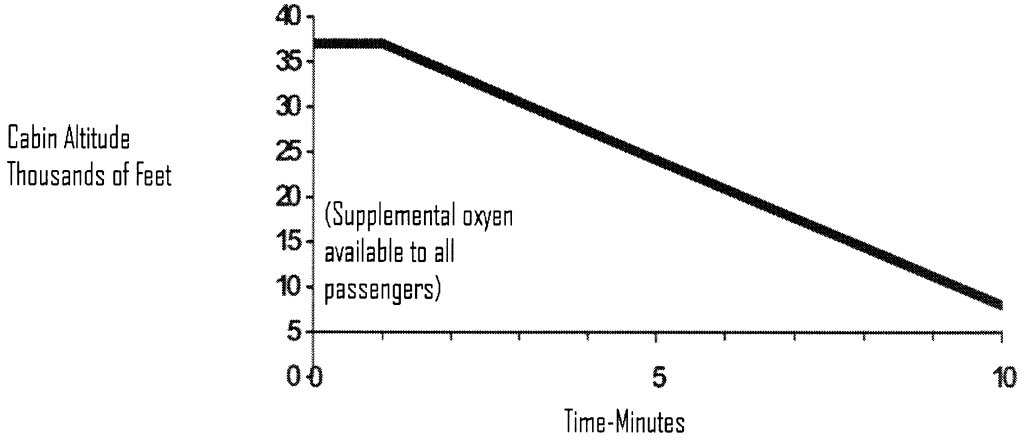

FIGURE 2—Cabin Altitude—Time History

Note: For Figure 2, time starts at the moment cabin altitude exceeds 10,000 feet during decompression.

(d) If certification for operation above 45,000 feet and not more than 51,000 feet is requested—

(1) Pressurized cabins must be equipped to provide a cabin pressure altitude of not more than 8,000 feet at the maximum operating altitude of the airplane under normal operating conditions.

(2) The airplane must prevent cabin pressure altitude from exceeding the following after decompression from any failure condition not shown to be extremely improbable:

(i) Twenty-five thousand (25,000) feet for more than 2 minutes, or

(ii) Forty thousand (40,000) feet for any duration.

(3) Fuselage structure, engine and system failures are to be considered in evaluating the cabin decompression.

(4) In addition to the cabin altitude indicating means in (b)(6) of this section, an aural or visual signal must be provided to warn the flight crew when the cabin pressure altitude exceeds 10,000 feet.

(5) The sensing system and pressure sensors necessary to meet the requirements of (b)(5), (b)(6), and (d)(4) of this section and § 23.1447(e), must, in the event of low cabin pressure, actuate the required warning and automatic presentation devices without any delay that would significantly increase the hazards resulting from decompression.

(e) If certification for operation above 41,000 feet is requested, additional damage-tolerance requirements are necessary to prevent fatigue damage that could result in a loss of pressure that exceeds the requirements of paragraphs (c) and (d) of this section. Sufficient full scale fatigue test evidence must be provided to demonstrate that this type of pressure loss due to fatigue cracking will not occur within the Limit of Validity of the Maintenance program for the airplane. In addition, a damage tolerance evaluation of the fuselage pressure boundary must be performed assuming visually detectable cracks and the maximum damage size for which the requirements of paragraphs (c) and (d) of this section can be met. Based on this evaluation, inspections or other procedures must be established and included in the Limitations Section of the Instructions for Continued Airworthiness required by § 23.1529.

37. Amend § 23.853 by revising paragraph (d)(2) to read as follows:

§ 23.853 Passenger and crew compartment interiors.

* * * * *

(d) * * *

(2) Lavatories must have ''No Smoking'' or ''No Smoking in Lavatory'' placards located conspicuously on each side of the entry door.

* * * * *

38. Add a new § 23.856 to read as follows:

§ 23.856 Thermal/Acoustic insulation materials.

Thermal/acoustic insulation material installed in the fuselage must meet the flame propagation test requirements of part II of Appendix F to this part, or other approved equivalent test requirements. This requirement does not apply to ''small parts,'' as defined in part I of Appendix F of this part.

39. Amend § 23.903 by revising paragraph (b)(2) to read as follows:

§ 23.903 Engines.

* * * * *

(b) * * *

(2) For engines embedded in the fuselage behind the cabin, the effects of a fan exiting forward of the inlet case (fan disconnect) must be addressed, the passengers must be protected, and the airplane must have the ability to maintain controlled flight and landing.

* * * * *

40. Amend § 23.1141 by adding a new paragraph (h) to read as follows:

§ 23.1141 Powerplant controls: General.

* * * * *

(h) Electronic engine control system installations must meet the requirements of § 23.1309.

41. Amend § 23.1165 by revising paragraph (f) to read as follows:

§ 23.1165 Engine ignition systems.

* * * * *

(f) In addition, for commuter category airplanes, each turbine engine ignition system must be an essential electrical load.

42. Amend § 23.1193 by revising paragraph (g) to read as follows:

§ 23.1193 Cowling and nacelle.

* * * * *

(g) In addition, for all turbojet airplanes and commuter category airplanes, the airplane must be designed so that no fire originating in any engine compartment can enter, either through openings or by burn through, any other region where it would create additional hazards.

43. Amend § 23.1195 by revising the introductory text of paragraph (a) and by revising paragraph (a)(2) to read as follows:

§ 23.1195 Fire extinguishing systems.

(a) For all turbojet airplanes and commuter category airplanes, fire extinguishing systems must be installed and compliance shown with the following:

* * * * *

(2) The fire extinguishing system, the quantity of the extinguishing agent, the rate of discharge, and the discharge distribution must be adequate to extinguish fires. An individual ''one shot'' system may be used, except for engine(s) embedded in the fuselage, where a ''two-shot'' system is required.

* * * * *

44. Amend § 23.1197 by revising the introductory text to read as follows:

§ 23.1197 Fire extinguishing agents.

For all turbojet airplanes and commuter category airplanes, the following applies:

* * * * *

45. Amend § 23.1199 by revising the introductory text to read as follows:

§ 23.1199 Extinguishing agent containers.

For all turbojet airplanes and commuter category airplanes, the following applies:

* * * * *

46. Amend § 23.1201 by revising the introductory text to read as follows:

§ 23.1201 Fire extinguishing systems materials.

For all turbojet airplanes and commuter category airplanes, the following apply:

* * * * *

47. Revise § 23.1301 by revising paragraphs (b) and (c) and by removing paragraph (d) to read as follows:

§ 23.1301 Function and installation.

* * * * *

(b) Be labeled as to its identification, function, or operating limitations, or any applicable combination of these factors; and

(c) Be installed according to limitations specified for that equipment.

48. Amend § 23.1303 by revising paragraph (c) to read as follows:

§ 23.1303 Flight and navigation instruments.

* * * * *

(c) A magnetic direction indicator.

* * * * *

49. Amend § 23.1305 by adding a new paragraph (f) to read as follows:

§ 23.1305 Powerplant instruments.

* * * * *

(f) Powerplant indicators must either provide trend or rate-of-change information, or have the ability to:

(1) Allow the pilot to assess necessary trend information quickly, including if and when this information is needed during engine restart;

(2) Allow the pilot to assess how close the indicated parameter is relative to a limit;

(3) Forewarn the pilot before the parameter reaches an operating limit; and

(4) For multiengine airplanes, allow the pilot to quickly and accurately compare engine-to-engine data.

50. Revise § 23.1307 to read as follows:

§ 23.1307 Miscellaneous equipment.

The equipment necessary for an airplane to operate at the maximum operating altitude and in the kinds of operations (*e.g.,* part 91, part 135) and meteorological conditions for which certification is requested and is approved in accordance with § 23.1559 must be included in the type design.

51. Revise § 23.1309 to read as follows:

§ 23.1309 Equipment, systems, and installations.

The requirements of this section, except as identified below, are applicable, in addition to specific design requirements of part 23, to any equipment or system as installed in the airplane. This section is a regulation of general requirements. It does not supersede any specific requirements contained in another section of part 23. This section should be used to determine software and hardware development assurance levels. This section does not apply to the performance, flight characteristics requirements of subpart B of this part, and structural loads and strength requirements of subparts C and D of this part, but it does apply to any system on which compliance with the requirements of subparts B, C, D, and E of this part are based. The flight structure such as wing, empennage, control surfaces and their simple, or simple and conventional systems, the fuselage, engine mounting, and landing gear and their related primary attachments are excluded. For example, it does not apply to an airplane's inherent stall characteristics or their evaluation of § 23.201, but it does apply to a stick pusher (stall barrier) system installed to attain compliance with § 23.201.

(a) The airplane equipment and systems must be designed and installed so that:

(1) Those required for type certification or by operating rules, or whose improper functioning would reduce safety, perform as intended under the airplane operating and environmental conditions, including radio frequency energy and the effects (both direct and indirect) of lightning strikes.

(2) Those required for type certification or by operating rules and other equipment and systems do not adversely affect the safety of the airplane or its occupants, or the proper functioning of those covered by paragraph (a)(1) of this section.

(3) For minor, major, hazardous, or catastrophic failure condition(s), the results of certification testing must not be inconsistent with the results of the safety analysis process.

(b) The airplane systems and associated components for the appropriate classes of airplane, considered separately and in relation to other systems, must be designed and installed so that:

(1) Each catastrophic failure condition is extremely improbable and does not result from a single failure;

(2) Each hazardous failure condition is extremely remote;

(3) Each major failure condition is remote; and

(4) Each failure condition meets the relationship among airplane classes, probabilities, severity of failure condition(s), and software and complex hardware development assurance levels shown in Appendix K of this part.

(5) Compliance with the requirements of paragraph (b)(2) of this section may be shown by analysis and, where necessary, by appropriate ground, flight, or simulator tests. The analysis must consider—

(i) Possible modes of failure, including malfunctions and damage from external sources;

(ii) The probability of multiple failures and the probability of undetected faults;

(iii) The resulting effects of the airplane and occupants, considering the stage of flight and operating conditions; and

(iv) The crew warning cues, corrective action required, and the crew's capability of determining faults.

(c) Functional failure condition(s) that are classified as minor do not require a quantitative analysis, but verification by a design and installation appraisal is required.

(d) Systems with major failure condition(s)—

(1) May be verified by a qualitative analysis, if the systems are simple, simple and conventional, or conventional and redundant.

(2) Must be verified by a qualitative and quantitative analysis, if the systems

do not meet the condition(s) prescribed in paragraph (d)(1) of this section.

(e) Systems with hazardous or catastrophic failure condition(s)—

(1) May be verified by a qualitative and quantitative analysis, if the systems are simple and conventional.

(2) Must be verified by a qualitative and quantitative analysis if the systems are not simple and conventional.

(f) Information concerning an unsafe system operating condition(s) must be provided to the crew to enable them to take appropriate corrective action. A warning indication must be provided if immediate corrective action is required. Systems and controls, including indications and annunciations must be designed to minimize crew errors, which could create additional hazards.

52. Add a new § 23.1310 to read as follows:

§ 23.1310 Power source capacity and distribution.

(a) Each item of equipment, each system, and each installation whose functioning is required by this chapter and that requires a power supply is an ''essential load'' on the power supply. The power sources and the system must be able to supply the following power loads in probable operating combinations and for probable durations:

(1) Loads connected to the power distribution system with the system functioning normally.

(2) Essential loads after failure of—

(i) Any one engine on two-engine airplanes, or

(ii) Any two engines on an airplane with three or more engines, or

(iii) Any power converter or energy storage device.

(3) Essential loads for which an alternate source of power is required, as applicable, by the operating rules of this chapter, after any failure or malfunction in any one power supply system, distribution system, or other utilization system.

(b) In determining compliance with paragraph (a)(2) of this section, the power loads may be assumed to be reduced under a monitoring procedure consistent with safety in the kinds of operations authorized. Loads not required in controlled flight need not be considered for the two-engine-inoperative condition on airplanes with three or more engines.

53. Amend § 23.1311 by revising paragraphs (a)(5), (a)(6), (a)(7), and paragraph (b) to read as follows:

§ 23.1311 Electronic display instrument systems.

(a) * * *

(5) Have an independent magnetic direction indicator and an independent secondary mechanical altimeter, airspeed indicator, and attitude instrument or electronic display parameters for the altitude, airspeed, and attitude that are independent from the airplane's primary electrical power system. These secondary instruments may be installed in panel positions that are displaced from the primary positions specified by § 23.1321(d), but must be located where they meet the pilot's visibility requirements of § 23.1321(a).

(6) Incorporate sensory cues that provide a quick glance sense of rate and, when appropriate, trend information to the pilot.

(7) Incorporate equivalent visual displays of the instrument markings required by §§ 23.1541 through 23.1553, or visual displays that alert the pilot to abnormal operational values or approaches to established limitation values, for each parameter required to be displayed by this part.

(b) The electronic display indicators, including their systems and installations, and considering other airplane systems, must be designed so that one display of information essential for continued safe flight and landing will be available within one second to the crew with a single pilot action or by automatic means for continued safe operation, after any single failure or probable combination of failures.

* * * * *

54. Amend § 23.1323 by revising paragraph (e) to read as follows:

§ 23.1323 Airspeed indicating system.

* * * * *

(e) In addition, for normal, utility, and acrobatic category multiengine turbojet airplanes of more than 6,000 pounds maximum weight and commuter category airplanes, each system must be calibrated to determine the system error during the accelerate-takeoff ground run. The ground run calibration must be determined—

(1) From 0.8 of the minimum value of V_1 to the maximum value of V_2, considering the approved ranges of altitude and weight, and

(2) The ground run calibration must be determined assuming an engine failure at the minimum value of V_1.

* * * * *

55. Amend § 23.1331 by revising paragraph (c) to read as follows:

§ 23.1331 Instruments using a power source.

* * * * *

(c) For certification for Instrument Flight Rules (IFR) operations and for the heading, altitude, airspeed, and attitude, there must be at least:

(1) Two independent sources of power (not driven by the same engine on multiengine airplanes), and a manual or an automatic means to select each power source; or

(2) An additional display of parameters for heading, altitude, airspeed, and attitude that is independent from the airplane's primary electrical power system.

56. Amend § 23.1353 by revising paragraph (h) to read as follows:

§ 23.1353 Storage battery design and installation.

* * * * *

(h) In the event of a complete loss of the primary electrical power generating system, the battery must be capable of providing electrical power to those loads that are essential to continued safe flight and landing for:

(1) At least 30 minutes for airplanes that are certificated with a maximum altitude of 25,000 feet or less, and

(2) At least 60 minutes for airplanes that are certificated with a maximum altitude over 25,000 feet.

57. Revise § 23.1443 to read as follows:

§ 23.1443 Minimum mass flow of supplemental oxygen.

(a) If the airplane is to be certified above 40,000 feet, a continuous flow oxygen system must be provided for each passenger and crewmember.

(b) If continuous flow oxygen equipment is installed, an applicant must show compliance with the requirements of either paragraphs (b)(1) and (b)(2) or paragraph (b)(3) of this section:

(1) For each passenger, the minimum mass flow of supplemental oxygen required at various cabin pressure altitudes may not be less than the flow required to maintain, during inspiration and while using the oxygen equipment (including masks) provided, the following mean tracheal oxygen partial pressures:

(i) At cabin pressure altitudes above 10,000 feet up to and including 18,500 feet, a mean tracheal oxygen partial pressure of 100mm Hg when breathing 15 liters per minute, Body Temperature, Pressure, Saturated (BTPS) and with a tidal volume of 700cc with a constant time interval between respirations.

(ii) At cabin pressure altitudes above 18,500 feet up to and including 40,000 feet, a mean tracheal oxygen partial pressure of 83.8mm Hg when breathing 30 liters per minute, BTPS, and with a tidal volume of 1,100cc with a constant time interval between respirations.

Cabin Pressure Altitude Thousands of Feet.

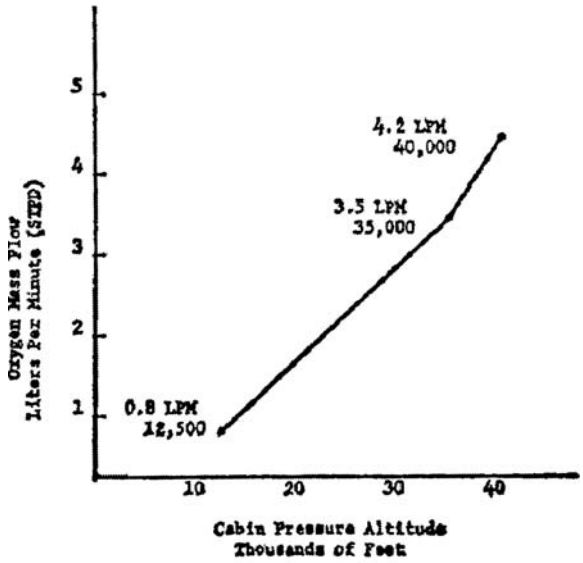

FIGURE 1--Cabin Pressure Altitude

(2) For each flight crewmember, the minimum mass flow may not be less than the flow required to maintain, during inspiration, a mean tracheal oxygen partial pressure of 149mm Hg when breathing 15 liters per minute, BTPS, and with a maximum tidal volume of 700cc with a constant time interval between respirations.

(3) The minimum mass flow of supplemental oxygen supplied for each user must be at a rate not less than that shown in the following figure for each altitude up to and including the maximum operating altitude of the airplane.

(c) If demand equipment is installed for use by flight crewmembers, the minimum mass flow of supplemental oxygen required for each flight crewmember may not be less than the flow required to maintain, during inspiration, a mean tracheal oxygen partial pressure of 122mm Hg up to and including a cabin pressure altitude of 35,000 feet, and 95 percent oxygen between cabin pressure altitudes of 35,000 and 40,000 feet, when breathing 20 liters per minutes BTPS. In addition, there must be means to allow the crew to use undiluted oxygen at their discretion.

(d) If first-aid oxygen equipment is installed, the minimum mass flow of oxygen to each user may not be less than 4 liters per minute, STPD. However, there may be a means to decrease this flow to not less than 2 liters per minute, STPD, at any cabin altitude. The quantity of oxygen required is based upon an average flow rate of 3 liters per minute per person for whom first-aid oxygen is required.

(e) As used in this section:

(1) BTPS means Body Temperature, and Pressure, Saturated (which is 37 °C, and the ambient pressure to which the body is exposed, minus 47mm Hg, which is the tracheal pressure displaced by water vapor pressure when the breathed air becomes saturated with water vapor at 37 °C).

(2) STPD means Standard Temperature and Pressure, Dry (which is 0 °C at 760mm Hg with no water vapor).

58. Amend § 23.1445 by adding a new paragraph (c) to read as follows:

§ 23.1445 Oxygen distribution system.

* * * * *

(c) If the flight crew and passengers share a common source of oxygen, a means to separately reserve the minimum supply required by the flight crew must be provided.

59. Amend § 23.1447 by adding a new paragraph (g) to read as follows:

§ 23.1447 Equipment standards for oxygen dispensing units.

* * * * *

(g) If the airplane is to be certified for operation above 40,000 feet, a quick-donning oxygen mask system, with a pressure demand, mask mounted regulator must be provided for the flight crew. This dispensing unit must be immediately available to the flight crew when seated at their station and installed so that it:

(1) Can be placed on the face from its ready position, properly secured, sealed, and supplying oxygen upon demand, with one hand, within five seconds and without disturbing eyeglasses or causing delay in proceeding with emergency duties, and

(2) Allows, while in place, the performance of normal communication functions.

60. Amend § 23.1505 by revising paragraph (c) to read as follows:

§ 23.1505 Airspeed limitations.

* * * * *

(c) Paragraphs (a) and (b) of this section do not apply to turbine airplanes or the airplanes for which a design diving speed V_D/M_D is established under § 23.335(b)(4). For those airplanes, a maximum operating limit speed (V_{MO}/M_{MO} airspeed or Mach number, whichever is critical at a particular altitude) must be established as a speed that may not be deliberately exceeded in any regime of flight (climb, cruise, or descent) unless a higher speed is authorized for flight test or pilot training operations. V_{MO}/M_{MO} must be established so that it is not greater than the design cruising speed V_C/M_C and so that it is sufficiently below V_D/M_D, or V_{DF}/M_{DF} for turbojets, and the maximum speed shown under § 23.251 to make it highly improbable that the latter speeds will be inadvertently exceeded in operations. The speed margin between V_{MO}/M_{MO} and V_D/M_D,

or V_{DF}/M_{DF} for turbojets, may not be less than that determined under § 23.335(b), or the speed margin found necessary in the flight tests conducted under § 23.253.

61. Revise § 23.1525 to read as follows:

§ 23.1525 Kinds of operation.

The kinds of operation authorized (*e.g.*, VFR, IFR, day, night, part 91, part 135) and the meteorological conditions (*e.g.*, icing) to which the operation of the airplane is limited or from which it is prohibited, must be established appropriate to the installed equipment.

62. Amend § 23.1545 by revising paragraph (d) to read as follows:

§ 23.1545 Airspeed indicator.

* * * * *

(d) Paragraphs (b)(1) through (b)(4) and paragraph (c) of this section do not apply to airplanes for which a maximum operating speed V_{MO}/M_{MO} is established under § 23.1505(c). For those airplanes, there must either be a maximum allowable airspeed indication showing the variation of V_{MO}/M_{MO} with altitude or compressibility limitations (as appropriate), or a radial red line marking for V_{MO}/M_{MO} must be made at the lowest value of V_{MO}/M_{MO} established for any altitude up to the maximum operating altitude for the airplane.

63. Amend § 23.1555 by adding a new paragraph (d)(3) to read as follows:

§ 23.1555 Control markings.

* * * * *

(d) * * *

(3) For fuel systems having a calibrated fuel quantity indication system complying with § 23.1337(b)(1) and accurately displaying the actual quantity of usable fuel in each selectable tank, no fuel capacity placards outside of the fuel quantity indicator are required.

* * * * *

64. Amend § 23.1559 by adding a new paragraph (d) to read as follows:

§ 23.1559 Operating limitations placard.

* * * * *

(d) The placard(s) required by this section need not be lighted.

65. Amend § 23.1563 by adding a new paragraph (d) to read as follows:

§ 23.1563 Airspeed placards.

* * * * *

(d) The airspeed placard required by this section need not be lighted if the landing gear operating speed is indicated on the airspeed indicator or other lighted area such as the landing gear control and the airspeed indicator has features such as low speed awareness that provide ample warning prior to V_{MC}.

66. Amend § 23.1567 by adding a new paragraph (e) to read as follows:

§ 23.1567 Flight maneuver placard.

* * * * *

(e) The placards required by this section need not be lighted.

67. Amend § 23.1583 as follows:

a. Revise the introductory text of paragraphs (c)(3) and (c)(4);

b. Redesignate paragraphs (c)(4)(iii) and (c)(4)(iv) as paragraphs (c)(4)(ii)(A) and (c)(4)(ii)(B); and

c. Revise paragraph (c)(5) introductory text to read as follows:

§ 23.1583 Operating limitations.

* * * * *

(c) * * *

(3) For reciprocating engine-powered airplanes of more than 6,000 pounds maximum weight, single-engine turbines, and multiengine turbine airplanes 6,000 pounds or less maximum weight in the normal, utility, and acrobatic category, performance operating limitations as follows—

* * * * *

(4) For normal, utility, and acrobatic category multiengine turbojet powered airplanes over 6,000 pounds and commuter category airplanes, the maximum takeoff weight for each airport altitude and ambient temperature within the range selected by the applicant at which—

* * * * *

(5) For normal, utility, and acrobatic category multiengine turbojet powered airplanes over 6,000 pounds and commuter category airplanes, the maximum landing weight for each airport altitude within the range selected by the applicant at which—

* * * * *

68. Amend § 23.1585 by revising paragraph (f) introductory text to read as follows:

§ 23.1585 Operating procedures.

* * * * *

(f) In addition to paragraphs (a) and (c) of this section, for normal, utility, and acrobatic category multiengine turbojet powered airplanes over 6,000 pounds, and commuter category airplanes, the information must include the following:

* * * * *

69. Amend § 23.1587 by revising paragraph (d) introductory text to read as follows:

§ 23.1587 Performance information.

* * * * *

(d) In addition to paragraph (a) of this section, for normal, utility, and acrobatic category multiengine turbojet powered airplanes over 6,000 pounds, and commuter category airplanes, the following information must be furnished—

* * * * *

70. Amend Appendix F to Part 23 by:

a. Redesignating the existing text as Part I and adding a new Part I heading;

b. Removing the introductory paragraph; and

c. Adding a new Part II.

The additions read as follows:

APPENDIX F TO PART 23—TEST PROCEDURE

Part I—Acceptable Test Procedure for Self-Extinguishing Materials for Showing Compliance With §§ 23.853, 23.855 and 23.1359

* * * * *

Part II—Test Method To Determine the Flammability and Flame Propagation Characteristics of Thermal/Acoustic Insulation Materials

Use this test method to evaluate the flammability and flame propagation characteristics of thermal/acoustic insulation when exposed to both a radiant heat source and a flame.

(a) *Definitions.*

''*Flame propagation*'' means the furthest distance of the propagation of visible flame towards the far end of the test specimen, measured from the midpoint of the ignition source flame. Measure this distance after initially applying the ignition source and before all flame on the test specimen is extinguished. The measurement is not a determination of burn length made after the test.

''*Radiant heat source*'' means an electric or air propane panel.

''*Thermal/acoustic insulation''* means a material or system of materials used to provide thermal and/or acoustic protection. Examples include fiberglass or other batting material encapsulated by a film covering and foams.

''*Zero point*'' means the point of application of the pilot burner to the test specimen.

(b) *Test apparatus.*

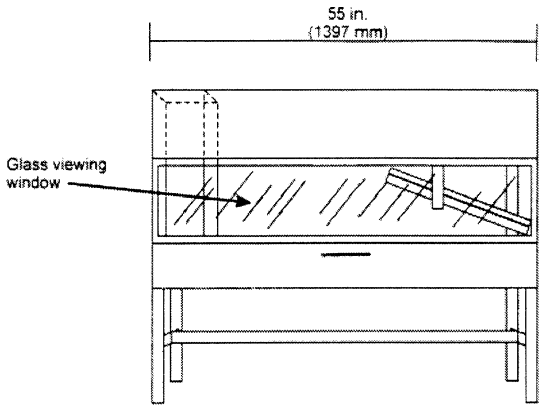

FIGURE F1—Radiant Panel Test Chamber

(1) *Radiant panel test chamber.* Conduct tests in a radiant panel test chamber (see figure F1 above). Place the test chamber under an exhaust hood to facilitate clearing the chamber of smoke after each test. The radiant panel test chamber must be an enclosure 55 inches (1397 mm) long by 19.5 (495 mm) deep by 28 (710 mm) to 30 inches (maximum) (762 mm) above the test specimen. Insulate the sides, ends, and top with a fibrous ceramic insulation, such as Kaowool MTM board. On the front side, provide a 52 by 12-inch (1321 by 305 mm) draft-free, high-temperature, glass window for viewing the sample during testing. Place a door below the window to provide access to the movable specimen platform holder. The bottom of the test chamber must be a sliding steel platform that has provision for securing the test specimen holder in a fixed and level position. The chamber must have an internal chimney with exterior dimensions of 5.1 inches (129 mm) wide, by 16.2 inches (411 mm) deep by 13 inches (330 mm) high at the opposite end of the chamber from the radiant energy source. The interior dimensions must be 4.5 inches (114 mm) wide by 15.6 inches (395 mm) deep. The chimney must extend to the top of the chamber (*see* figure F2).

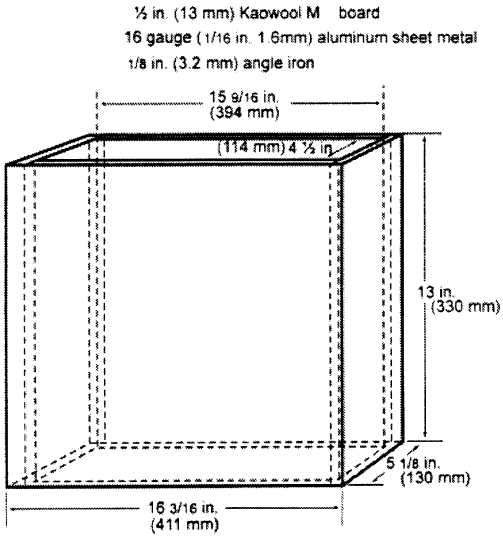

FIGURE F2—Internal Chimney

(2) *Radiant heat source.* Mount the radiant heat energy source in a cast iron frame or equivalent. An electric panel must have six, 3-inch wide emitter strips. The emitter strips must be perpendicular to the length of the panel. The panel must have a radiation surface of 12 ⅞ by 18 ½ inches (327 by 470 mm). The panel must be capable of operating at temperatures up to 1300 °F (704 °C). An air propane panel must be made of a porous refractory material and have a radiation surface of 12 by 18 inches (305 by 457 mm). The panel must be capable of operating at temperatures up to 1,500 °F (816 °C). *See* figures 3a and 3b.

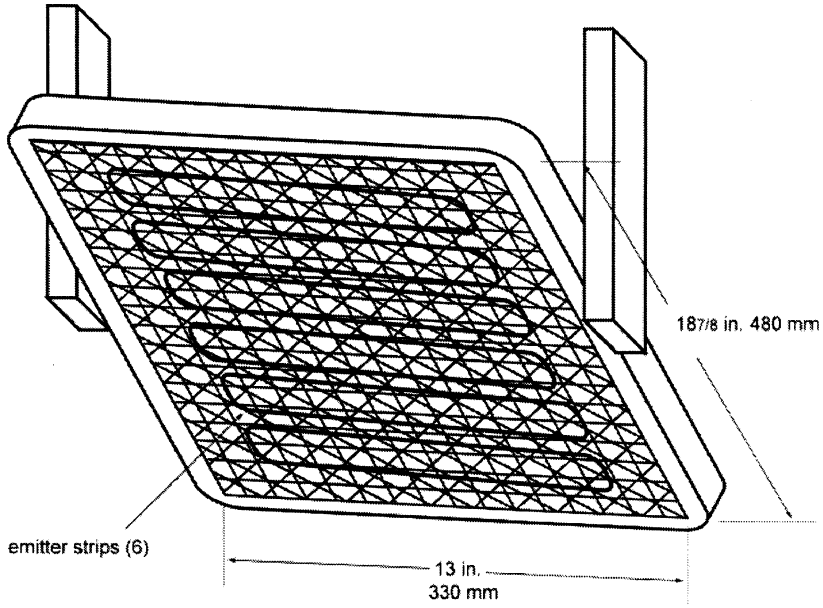

FIGURE F3A—Electric Panel

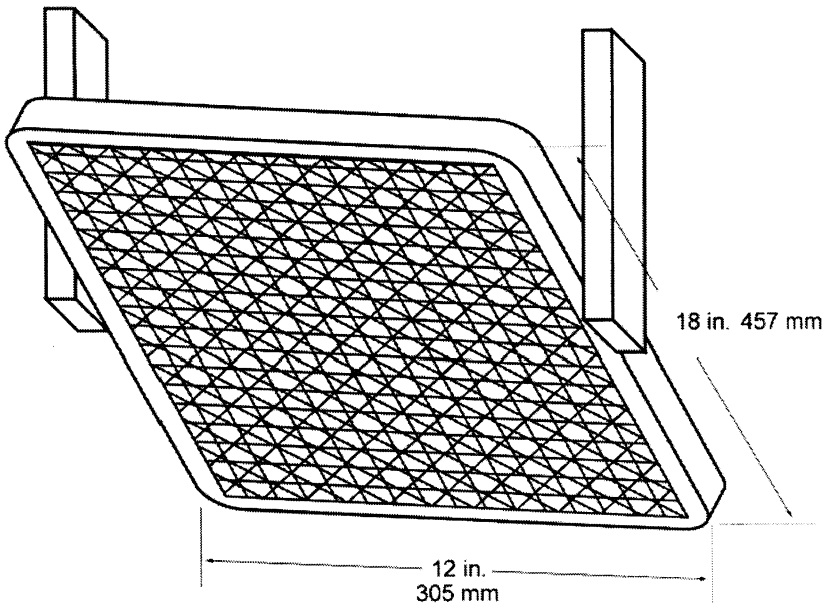

FIGURE F3b—Air Propane Radiant Panel

(i) *Electric radiant panel.* The radiant panel must be 3-phase and operate at 208 volts. A single-phase, 240 volt panel is also acceptable. Use a solid-state power controller and microprocessor-based controller to set the electric panel operating parameters.

(ii) *Gas radiant panel.* Use propane (liquid petroleum gas—2.1 UN 1075) for the radiant panel fuel. The panel fuel system must consist of a venturi-type aspirator for mixing gas and air at approximately atmospheric pressure. Provide suitable instrumentation for monitoring and controlling the flow of fuel and air to the panel. Include an air flow gauge, an air flow regulator, and a gas pressure gauge.

(iii) *Radiant panel placement.* Mount the panel in the chamber at 30 degrees to the horizontal specimen plane, and 7½ inches above the zero point of the specimen.

(3) *Specimen holding system.*

(i) The sliding platform serves as the housing for test specimen placement. Brackets may be attached (via wing nuts) to the top lip of the platform in order to accommodate various thicknesses of test specimens. Place the test specimens on a sheet of Kaowool MTM board or 1260 Standard Board (manufactured by Thermal Ceramics and available in Europe), or equivalent, either resting on the bottom lip of the sliding platform or on the base of the brackets. It may be necessary to use multiple sheets of material based on the thickness of the test specimen (to meet the sample height requirement). Typically, these non-combustible sheets of material are available in ¼ inch (6 mm) thicknesses. *See* figure F4. A sliding platform that is deeper than the 2-

inch (50.8 mm) platform shown in figure F4 is also acceptable as long as the sample height requirement is met.

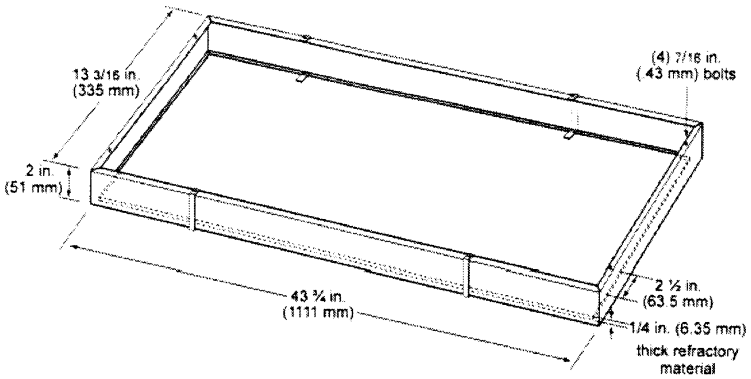

FIGURE F4—Sliding Platform

(ii) Attach a ½ inch (13 mm) piece of Kaowool MTM board or other high temperature material measuring 41½ by 8¼ inches (1054 by 210 mm) to the back of the platform. This board serves as a heat retainer and protects the test specimen from excessive preheating. The height of this board must not impede the sliding platform movement (in and out of the test chamber). If the platform has been fabricated such that the back side of the platform is high enough to prevent excess preheating of the specimen when the sliding platform is out, a retainer board is not necessary.

(iii) Place the test specimen horizontally on the non-combustible board(s). Place a steel retaining/securing frame fabricated of mild steel, having a thickness of ⅛ inch (3.2 mm) and overall dimensions of 23 by 13⅛ inches (584 by 333 mm) with a specimen opening of 19 by 10¾ inches (483 by 273 mm) over the test specimen. The front, back, and right portions of the top flange of the frame must rest on the top of the sliding platform, and the bottom flanges must pinch all 4 sides of the test specimen. The right bottom flange must be flush with the sliding platform. *See* figure F5.

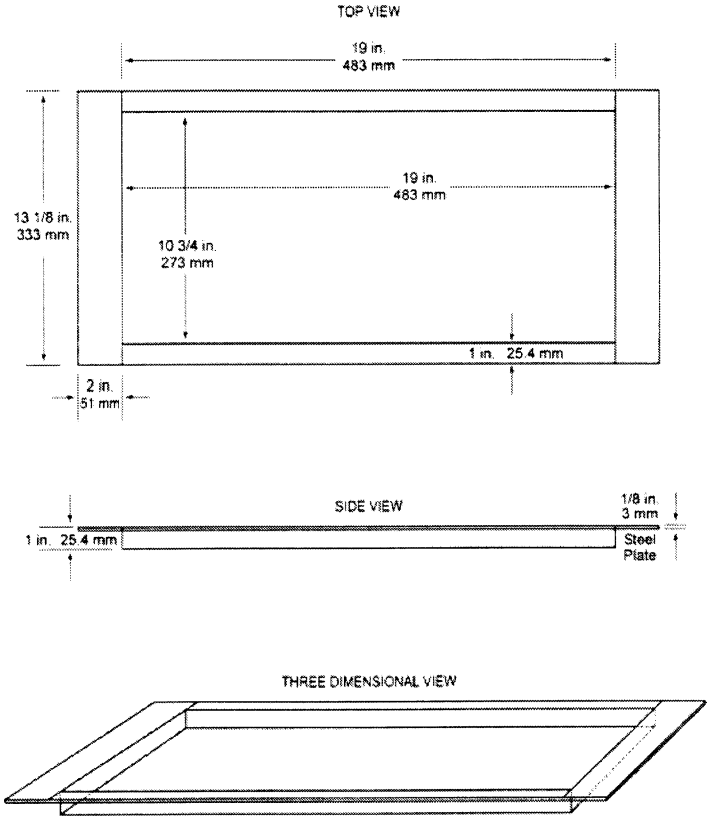

FIGURE F5: 3 Views

(4) *Pilot Burner.* The pilot burner used to ignite the specimen must be a BernzomaticTM commercial propane venturi torch with an axially symmetric burner tip and a propane supply tube with an orifice diameter of 0.006 inches (0.15 mm). The length of the burner tube must be 2⅞ inches (71 mm). The propane flow must be adjusted via gas pressure through an in-line regulator to produce a blue inner cone length of ¾ inch (19 mm). A ¾ inch (19 mm) guide (such as a thin strip of metal) may be soldered to the top of the burner to aid in setting the flame height. The overall flame length must be approximately 5 inches long (127 mm). Provide a way to move the burner out of the ignition position so that the flame is horizontal and at least 2 inches (50 mm) above the specimen plane. *See* figure F6.

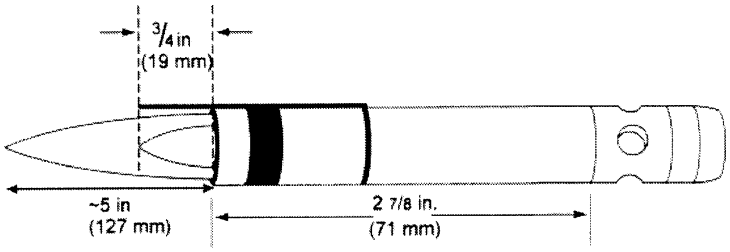

FIGURE F6—Propane Pilot Burner

(5) *Thermocouples.* Install a 24 American Wire Gauge (AWG) Type K (Chromel-Alumel) thermocouple in the test chamber for temperature monitoring. Insert it into the chamber through a small hole drilled through the back of the chamber. Place the thermocouple so that it extends 11 inches (279 mm) out from the back of the chamber wall, 11½ inches (292 mm) from the right side of the chamber wall, and is 2 inches (51 mm) below the radiant panel. The use of other thermocouples is optional.

(6) *Calorimeter.* The calorimeter must be a one-inch cylindrical water-cooled, total heat flux density, foil type Gardon Gage that has a range of 0 to 5 BTU/ft^2 -second (0 to 5.7 Watts/cm^2).

(7) *Calorimeter calibration specification and procedure.*

(i) Calorimeter specification.

(A) Foil diameter must be 0.25 ± 0.005 inches (6.35 ± 0.13 mm).

(B) Foil thickness must be 0.0005 ± 0.0001 inches (0.013 ± 0.0025 mm).

(C) Foil material must be thermocouple grade Constantan.

(D) Temperature measurement must be a Copper Constantan thermocouple.

(E) The copper center wire diameter must be 0.0005 inches (0.013 mm).

(F) The entire face of the calorimeter must be lightly coated with ''Black Velvet'' paint having an emissivity of 96 or greater.

(ii) Calorimeter calibration.

(A) The calibration method must be by comparison to a like standardized transducer.

(B) The standardized transducer must meet the specifications given in paragraph VI(b)(6) of this appendix.

(C) Calibrate the standard transducer against a primary standard traceable to the National Institute of Standards and Technology (NIST).

(D) The method of transfer must be a heated graphite plate.

(E) The graphite plate must be electrically heated, have a clear surface area on each side of the plate of at least 2 by 2 inches (51 by 51 mm), and be ⅛ inch ± 1/16 inch thick (3.2 ± 1.6 mm).

(F) Center the 2 transducers on opposite sides of the plates at equal distances from the plate.

(G) The distance of the calorimeter to the plate must be no less than 0.0625 inches (1.6 mm), nor greater than 0.375 inches (9.5 mm).

(H) The range used in calibration must be at least 0–3.5 BTUs/ft^2 second (0–3.9 Watts/cm^2) and no greater than 0–5.7 BTUs/ft^2 second (0–6.4 Watts/cm^2).

(I) The recording device used must record the 2 transducers simultaneously or at least within 1/10 of each other.

(8) *Calorimeter fixture.* With the sliding platform pulled out of the chamber, install the calorimeter holding frame and place a sheet of non-combustible material in the bottom of the sliding platform adjacent to the holding frame. This will prevent heat losses during calibration. The frame must be 13⅛ inches (333 mm) deep (front to back) by 8 inches (203 mm) wide and must rest on the top of the sliding platform. It must be fabricated of ⅛ inch (3.2 mm) flat stock steel and have an opening that accommodates a ½ inch (12.7 mm) thick piece of refractory board, which is level with the top of the sliding platform. The board must have three 1-inch (25.4 mm) diameter holes drilled through the board for calorimeter insertion. The distance to the radiant panel surface from the centerline of the first hole (''zero'' position) must be 7½ ± ⅛ inches (191 ± 3 mm). The distance between the centerline of the first hole to the centerline of the second hole must be 2 inches (51 mm). It must also be the same distance from the centerline of the second hole to the centerline of the third hole. See figure F7. A calorimeter holding frame that differs in construction is acceptable as long as the height from the centerline of the first hole to the radiant panel and the distance between holes is the same as described in this paragraph.

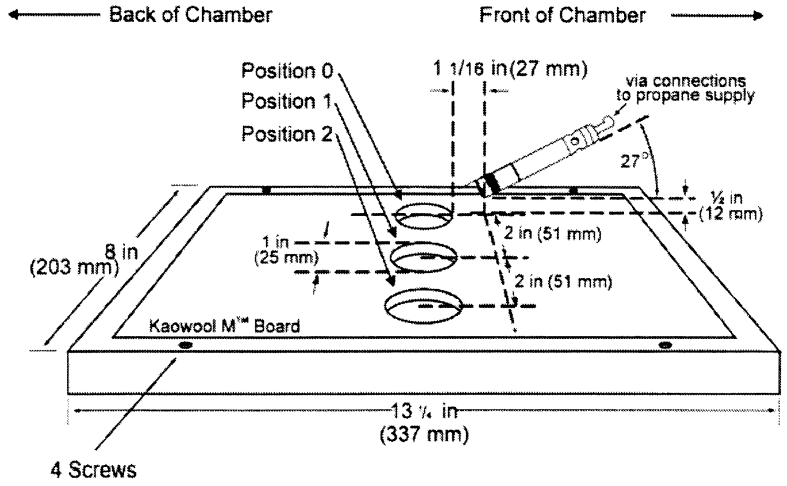

FIGURE F7—Calorimeter Holding Frame

(9) *Instrumentation.* Provide a calibrated recording device with an appropriate range or a computerized data acquisition system to measure and record the outputs of the calorimeter and the thermocouple. The data acquisition system must be capable of recording the calorimeter output every second during calibration.

(10) *Timing device.* Provide a stopwatch or other device, accurate to ± 1 second/hour, to measure the time of application of the pilot burner flame.

(c) *Test specimens.*

(1) *Specimen preparation.* Prepare and test a minimum of three test specimens. If an oriented film cover material is used, prepare and test both the warp and fill directions.

(2) *Construction.* Test specimens must include all materials used in construction of the insulation (including batting, film, scrim, tape, *etc.*). Cut a piece of core material such as foam or fiberglass, and cut a piece of film cover material (if used) large enough to cover the core material. Heat sealing is the preferred method of preparing fiberglass samples, since they can be made without compressing the fiberglass (''box sample''). Cover materials that are not heat sealable may be stapled, sewn, or taped as long as the cover material is over-cut enough to be drawn down the sides without compressing the core material. The fastening means should be as continuous as possible along the length of the seams. The specimen thickness must be of the same thickness as installed in the airplane.

(3) *Specimen Dimensions.* To facilitate proper placement of specimens in the sliding platform housing, cut non-rigid core materials, such as fiberglass, 12½ inches (318 mm) wide by 23 inches (584 mm) long. Cut rigid materials, such as foam, 11½ ± ¼ inches (292 mm ± 6 mm) wide by 23 inches (584 mm) long in order to fit properly in the sliding platform housing and provide a flat, exposed surface equal to the opening in the housing.

(d) *Specimen conditioning.* Condition the test specimens at 70 ± 5 °F (21 ± 2 °C) and 55 percent ± 10 percent relative humidity, for a minimum of 24 hours prior to testing.

(e) *Apparatus Calibration.*

(1) With the sliding platform out of the chamber, install the calorimeter holding frame. Push the platform back into the chamber and insert the calorimeter into the first hole (''zero'' position). *See* figure F7. Close the bottom door located below the sliding platform. The distance from the centerline of the calorimeter to the radiant panel surface at this point must be 7½ inches ± ⅛ (191 mm ± 3). Before igniting the radiant panel, ensure that the calorimeter face is clean and that there is water running through the calorimeter.

(2) Ignite the panel. Adjust the fuel/air mixture to achieve 1.5 BTUs/feet^2 −second ± 5 percent (1.7 Watts/cm^2 ± 5 percent) at the ''zero'' position. If using an electric panel, set the power controller to achieve the proper heat flux. Allow the unit to reach steady state (this may take up to 1 hour). The pilot burner must be off and in the down position during this time.

(3) After steady-state conditions have been reached, move the calorimeter 2 inches (51 mm) from the ''zero'' position (first hole) to position 1 and record the heat flux. Move the calorimeter to position 2 and record the heat flux. Allow enough time at each position for the calorimeter to stabilize. Table 1 depicts typical calibration values at the three positions.

TABLE 1—CALIBRATION TABLE

Position	BTU's/feet^2 sec	Watts/cm^2
''Zero'' Position	1.5	1.7
Position 1	1.51–1.50–1.49	1.71–1.70–1.69
Position 2	1.43–1.44	1.62–1.63

(4) Open the bottom door, remove the calorimeter and holder fixture. Use caution as the fixture is very hot.

(f) *Test Procedure.*

(1) Ignite the pilot burner. Ensure that it is at least 2 inches (51 mm) above the top of the platform. The burner must not contact the specimen until the test begins.

(2) Place the test specimen in the sliding platform holder. Ensure that the test sample surface is level with the top of the platform. At ''zero'' point, the specimen surface must be 7½ inches ± ⅛ inch (191 mm ± 3) below the radiant panel.

(3) Place the retaining/securing frame over the test specimen. It may be necessary (due to compression) to adjust the sample (up or down) in order to maintain the distance from the sample to the radiant panel (7½ inches ± ⅛ inch (191 mm ± 3) at ''zero'' position). With film/fiberglass assemblies, it is critical to make a slit in the film cover to purge any air inside. This allows the operator to maintain the proper test specimen position (level with the top of the platform) and to allow ventilation of gases during testing. A longitudinal slit, approximately 2 inches (51 mm) in length, must be centered 3 inches ± ½ inch (76 mm ± 13 mm) from the left flange of the securing frame. A utility knife is acceptable for slitting the film cover.

(4) Immediately push the sliding platform into the chamber and close the bottom door.

(5) Bring the pilot burner flame into contact with the center of the specimen at the ''zero'' point and simultaneously start the timer. The pilot burner must be at a 27 degree angle with the sample and be approximately ½ inch (12 mm) above the sample. *See* figure F7. A stop, as shown in figure F8, allows the operator to position the burner correctly each time.

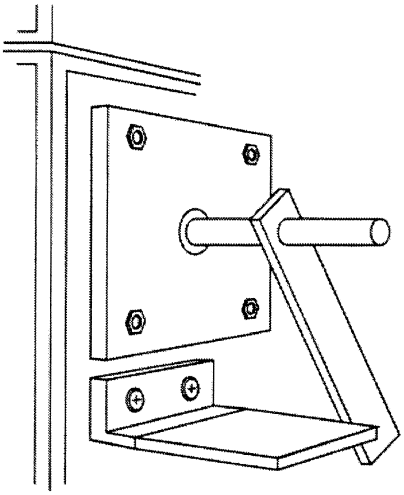

FIGURE F8—Propane Burner Stop

(6) Leave the burner in position for 15 seconds and then remove to a position at least 2 inches (51 mm) above the specimen.

(g) *Report.*

(1) Identify and describe the test specimen.

(2) Report any shrinkage or melting of the test specimen.

(3) Report the flame propagation distance. If this distance is less than 2 inches, report this as a pass (no measurement required).

(4) Report the after-flame time.

(h) *Requirements.*

(1) There must be no flame propagation beyond 2 inches (51 mm) to the left of the centerline of the pilot flame application.

(2) The flame time after removal of the pilot burner may not exceed 3 seconds on any specimen.

71. Add a new Appendix K to part 23 to read as follows:

Appendix K to Part 23—Relationship Among Airplane Classes, Probabilities, Severity of Failure Conditions, and Software and Complex Hardware Development Assurance Levels

Classification of failure conditions	No safety effect	Minor	Major	Hazardous	Catastrophic
Allowable qualitative probability	No probability requirement	Probable	Remote	Extremely remote	Extremely improbable
Effect on Airplane	No effect on operational capabilities or safety.	Slight reduction in functional capabilities or safety margins.	Significant reduction in functional capabilities or safety margins.	Large reduction in functional capabilities or safety margins.	Normally with hull loss.
Effect on Occupants ...	Inconvenience for passengers.	Physical discomfort for passengers.	Physical distress to passengers, possibly including injuries.	Serious or fatal injury to an occupant.	Multiple fatalities
Effect on Flight Crew ..	No effect on flight crew.	Slight increase in workload or use of emergency procedures.	Physical discomfort or a significant increase in workload.	Physical distress or excessive workload impairs ability to perform tasks.	Fatal Injury or incapacitation.
Classes of Airplanes	Allowable Quantitative Probabilities and Software (SW) and Complex Hardware (HW) Development Assurance Levels (Note 2)				
Class I (Typically SRE under 6,000#).	No Probability or SW & HW Development Assurance Levels Requirement.	$<10^{-3}$, Note 1, P=D	$<10^{-4}$, Notes 1 & 4, P=C, S=D.	$<10^{-5}$, Notes 4, P=C, S=D.	$<10^{-6}$, Note 3, P=C, S=C.
Class II (Typically MRE, STE, or MTE under 6,000#).	No Probability or SW & HW Development Assurance Levels Requirement.	$<10^{-3}$, Note 1, P=D	$<10^{-5}$, Notes 1 & 4, P=C, S=D.	$<10^{-6}$, Notes 4, P=C, S=C.	$<10^{-7}$, Note 3, P=C, S=C.

Class III (Typically SRE, STE, MRE, & MTE equal or over 6,000#).	No Probability or SW & HW Development Assurance Levels Requirement.	$<10^{-3}$, Note 1, P=D	$<10^{-5}$, Notes 1 & 4, P=C, S=D.	$<10^{-7}$, Notes 4, P=C, S=C.	$<10^{-8}$, Note 3, P=B, S=C.
Class IV (Typically Commuter Category).	No Probability or SW & HW Development Assurance Levels Requirement.	$<10^{-3}$, Note 1, P=D	$<10^{-5}$, Notes 1 & 4, P=C, S=D.	$<10^{-7}$, Notes 4, P=B, S=C.	$<10^{-9}$, Note 3, P=A, S=B.

Note 1: Numerical values indicate an order of probability range and are provided here as a reference.

Note 2: The alphabets denote the typical SW and HW Development Assurance Levels for Primary System (P) and Secondary System (S). For example, HW or SW Development Assurance Level A on Primary System is noted by P=A.

Note 3: At airplane function level, no single failure will result in a Catastrophic Failure Condition.

Note 4: Secondary System (S) may not be required to meet probability goals. If installed, S must meet stated criteria.

Acronyms: SRE—single, reciprocating engine, MRE—multiple, reciprocating engines, STE—single, turbine engine, MTE—multiple, turbine engines, SW—software, HW—hardware.

Issued in Washington, DC, on August 6, 2009.

Dorenda D. Baker,

Director, Aircraft Certification Service, Office of Aviation Safety.

[FR Doc. E9–19350 Filed 8–14–09; 8:45 am]

BILLING CODE 4910–13–P

Federal Register

Monday,
August 17, 2009

Part IV

Department of Transportation

Federal Railroad Administration

49 CFR Parts 213 and 237
Bridge Safety Standards; Proposed Rule

DEPARTMENT OF TRANSPORTATION

Federal Railroad Administration

49 CFR Parts 213 and 237

[Docket No. FRA 2009–0014, Notice No. 1]

RIN 2130–AC04

Bridge Safety Standards

AGENCY: Federal Railroad Administration (FRA), Department of Transportation (DOT).

ACTION: Notice of proposed rulemaking (NPRM).

SUMMARY: FRA is proposing to standardize and establish Federal requirements for railroad bridges. This proposed rule would require track owners to implement bridge management programs that include annual inspections of railroad bridges. The proposed rule would also require track owners to know the safe capacity load of bridges and to conduct special inspections if the weather or other conditions warrant such inspections. Finally, the proposed rule would also require the audit of the bridge management programs and the inspections.

DATES: Written comments must be received by October 1, 2009. Comments received after that date will be considered to the extent possible without incurring additional delay or expense.

FRA anticipates being able to complete this rulemaking without a public, oral hearing. However if FRA receives a specific request for a public, oral hearing prior to September 16, 2009, one will be scheduled and FRA will publish a supplemental notice in the **Federal Register** to inform interested parties of the date, time, and location of any such hearing.

ADDRESSES: *Comments:* Comments related to Docket No. FRA–2009–0014 may be submitted by any of the following methods:

- *Federal eRulemaking Portal:* Go to *http://www.Regulations.gov*. Follow the online instructions for submitting comments.
- *Mail:* Docket Management Facility, U.S. Department of Transportation, Room W12–140, 1200 New Jersey Avenue, SE., Washington, DC 20590–0001.
- *Hand Delivery:* Docket Management Facility, U.S. Department of Transportation, West Building, Ground Floor, Room W12–140, 1200 New Jersey Avenue, SE., Washington, DC, between 9 a.m. and 5 p.m. ET, Monday through Friday, except Federal holidays.
- *Fax:* 202–493–2251.

Instructions: All submissions must include the agency name and docket number or Regulatory Identification Number (RIN) for this rulemaking. Please note that all comments received will be posted without change to *http://www.Regulations.gov*, including any personal information provided. Please see the discussion under the Privacy Act heading in the **SUPPLEMENTARY INFORMATION** section of this document.

Docket: For access to the docket to read background documents or comments received, go to *http://www.Regulations.gov* at any time or visit the Docket Management Facility, U.S. Department of Transportation, West Building, Ground floor, Room W12–140, 1200 New Jersey Avenue, SE., Washington, DC between 9 a.m. and 5 p.m. ET, Monday through Friday, except Federal holidays.

FOR FURTHER INFORMATION CONTACT: Gordon A. Davids, P.E., Bridge Engineer, Office of Safety Assurance and Compliance, FRA, 1200 New Jersey Avenue, SE., Washington, DC 20590 (telephone: (202) 493–6320); or Sarah Grimmer Yurasko, Trial Attorney, Office of Chief Counsel, FRA, 1200 New Jersey Avenue, SE., Washington, DC 20950 (telephone: (202) 493–6390).

SUPPLEMENTARY INFORMATION:

Table of Contents for Supplementary Information

I. The Safety of Railroad Bridges
  A. General
  B. Regulatory History
II. Railroad Safety Advisory Committee (RSAC) Overview
III. RSAC Railroad Bridge Working Group
IV. Section-by-Section Analysis
V. Regulatory Impact
  A. Executive Order 12866 and DOT Regulatory Policies and Procedures
  B. Regulatory Flexibility Act and Executive Order 13272
  C. Paperwork Reduction Act
  D. Environmental Impact
  E. Federalism Implications
  F. Unfunded Mandate Reform Act of 1995
  G. Energy Impact
  H. Privacy Act Statement

Background

I. The Safety of Railroad Bridges

A. General

There are nearly 100,000 railroad bridges in the United States. These bridges are owned by over 600 different entities. The bridges vary in length, load capacity, design, and construction material. Everything that is shipped or transported via rail likely travels across one or more railroad bridge. Thus, everything from intermodal goods, automobiles, grain, coal, hazardous materials, and passengers is transported on the nation's rail system and therefore across railroad bridges.

The structural integrity of bridges that carry railroad tracks is important to the safety of railroad employees and to the public. The responsibility for the safety of railroad bridges rests with the owner of the track carried by the bridge, together with any other party to whom that responsibility has been assigned by the track owner. The severity of a train accident is usually compounded when a bridge is involved, regardless of the cause of the accident.

Beginning in 1991, FRA conducted a review of the safety of railroad bridges. The review was prompted by the agency's perception that the bridge population was aging, traffic density and loads were increasing on many routes, and the consequences of a bridge failure could be catastrophic. During the past five decades, not one fatality has been caused by the structural failure of a railroad bridge. Train accidents caused by the structural failure of railroad bridges have been extremely rare.

Although the average construction date of railroad bridges predates most highway bridges by several decades, the older railroad bridges were designed to carry heavy steam locomotives. Design factors were generally conservative, and the bridges' functional designs permit repairs and reinforcements when necessary to maintain their viability. Railroad bridges are most often privately, rather than publicly, owned. Their owners seem to recognize the economic consequences of neglecting important maintenance. Private ownership enables the railroads to control the loads that operate over their bridges. Cars and locomotives exceeding the nominal capacity of a bridge are not operated without permission from the responsible bridge engineers, and then only under restrictions and conditions that protect the integrity of the bridge.

Many railroad bridges display superficial signs of deterioration but still retain the capacity to safely carry their loads. Corrosion on a bridge is not a safety issue unless a critical area sees significant loss of material. Routine inspections are prescribed to detect this condition, but determination of its effect requires a detailed inspection and analysis of the bridge. In general, timber bridges continue to function safely, and masonry structures built as early as the 1830's remain functional and safe for their traffic. Of the few train accidents that involved bridges, most have not been caused by structural failure. FRA accident records for the 27 years 1982 through 2008 show 58 train accidents

that were caused by the structural failure of railroad bridges. These accidents resulted in nine reportable injuries and a reported $26,555,878 damage to railroad facilities, cars and locomotives.

B. Regulatory History

On April 27, 1995, FRA issued an interim statement of policy on the safety of railroad bridges. Published in the **Federal Register** at 60 FR 20654, the interim statement included a request for comments to be submitted to FRA during a 60-day period following publication. On August 30, 2000, FRA published a final statement of agency policy for the safety of railroad bridges (''policy statement''). *See* 65 FR 52667. The policy statement can be found at 49 CFR part 213 appendix C. With the policy, FRA established criteria for railroads to use to ensure the structural integrity of bridges that carry railroad tracks, which reflected minor changes following public comment on the interim statement. Unlike regulations under which FRA ordinarily issues violations and assesses civil penalties, the policy statement contains guidelines for the proper maintenance of bridge structures and is advisory in nature.

On October 16, 2008, President Bush signed into law the Railroad Safety Improvement Act of 2008, Public Law 110–423, Division A (''RSIA''). Section 417 of the RSIA directs FRA to issue, by October 16, 2009, regulations requiring railroad track owners to adopt and follow specific procedures to protect the safety of their bridges. This NPRM is the first step to the agency's promulgation of bridge safety regulations per the mandate of the RSIA. In the Section-by-Section Analysis, below, FRA will discuss how the proposed regulatory text addresses each portion of the RSIA.

Prior to the passage of the RSIA, FRA had already begun work on revising the policy statement. On January 13, 2009, FRA published an amendment to the policy statement by incorporating changes proposed by the Rail Safety Advisory Committee (''RSAC'') on September 10, 2008. RSAC developed a list of Essential Elements of Railroad Bridge Management Programs (''Essential Elements'') which make up the bulk of the amendment. The Essential Elements provide railroad track owners with a uniform, comprehensive set of components for recommended inclusion in their bridge management programs. With this information, a track owner may develop a single, comprehensive set of instructions, information and data as guidance for his employees who are responsible for the management, inspection, maintenance, and safety of railroad bridges. RSAC also recognized that, although most railroads were already performing these functions to varying degrees, it would be useful to have the recommended Essential Elements available in a central location so that all concerned may see the railroad's full program, and also to determine that no essential element is overlooked.

All aspects of the policy statement that are not incorporated into the regulatory text of part 237 are now found in its appendix A.

II. The Rail Safety Advisory Committee (RSAC) Overview

In March 1996, FRA established RSAC, which provides a forum for developing consensus recommendations to FRA's Administrator on rulemakings and other safety program issues. The RSAC includes representation from all of the industry's major stakeholders, including railroads, labor organizations, suppliers and manufacturers, and other interested parties. A list of RSAC members follows: American Association of Private Railroad Car Owners (AARPCO); American Association of State Highway & Transportation Officials (AASHTO); American Chemistry Council; American Petrochemical Institute; American Public Transportation Association (APTA); American Short Line and Regional Railroad Association (ASLRRA); American Train Dispatchers Association (ATDA); Association of American Railroads (AAR); Association of Railway Museums (ARM); Association of State Rail Safety Managers (ASRSM); Brotherhood of Locomotive Engineers and Trainmen (BLET); Brotherhood of Maintenance of Way Employes Division (BMWED); Brotherhood of Railroad Signalmen (BRS); Chlorine Institute; Federal Transit Administration (FTA)*; Fertilizer Institute; High Speed Ground Transportation Association (HSGTA); Institute of Makers of Explosives; International Association of Machinists and Aerospace Workers; International Brotherhood of Electrical Workers (IBEW); Labor Council for Latin American Advancement (LCLAA)*; League of Railway Industry Women*; National Association of Railroad Passengers (NARP); National Association of Railway Business Women*; National Conference of Firemen & Oilers; National Railroad Construction and Maintenance Association; National Railroad Passenger Corporation (Amtrak); National Transportation Safety Board (NTSB)*; Railway Supply Institute (RSI); Safe Travel America (STA); Secretaria de Comunicaciones y Transporte*; Sheet Metal Workers International Association (SMWIA); Tourist Railway Association Inc.; Transport Canada*; Transport Workers Union of America (TWU); Transportation Communications International Union/BRC (TCIU/BRC); Transportation Security Administration (TSA); and United Transportation Union (UTU).

*Indicates associate, non-voting membership.

When appropriate, FRA assigns a task to RSAC, and after consideration and debate, RSAC may accept or reject the task. If the task is accepted, RSAC establishes a working group that possesses the appropriate expertise and representation of interests to develop recommendations to FRA for action on the task. These recommendations are developed by consensus. A working group may establish one or more task forces to develop facts and options on a particular aspect of a given task. The task force then provides that information to the working group for consideration. If a working group comes to unanimous consensus on recommendations for action, the package is presented to the full RSAC for a vote. If the proposal is accepted by a simple majority of RSAC, the proposal is formally recommended to FRA. FRA then determines what action to take on the recommendation. Because FRA staff play an active role at the working group level in discussing the issues and options and in drafting the language of the consensus proposal, FRA is often favorably inclined toward the RSAC recommendation.

However, FRA is in no way bound to follow the recommendation, and the agency exercises its independent judgment on whether the recommended rule achieves the agency's regulatory goal, is soundly supported, and is in accordance with policy and legal requirements. Often, FRA varies in some respects from the RSAC recommendation in developing the actual regulatory proposal or final rule. Any such variations would be noted and explained in the rulemaking document issued by FRA. If the working group or RSAC is unable to reach consensus on recommendations for action, FRA moves ahead to resolve the issue through traditional rulemaking proceedings.

III. Railroad Bridge Working Group

RSAC agreed with FRA on February 20, 2008, to accept the task of reviewing FRA's railroad bridge safety policies and

activities, and to make appropriate recommendations for FRA to improve the bridge safety program. RSAC accordingly established a Railroad Bridge Working Group (RBWG), composed of representatives of the various organizations on the RSAC and including persons with particular expertise in railroad bridge safety and management. The RBWG met on April 24–25, 2008, June 12, 2008, and August 7, 2008. On September 10, 2008, the full RSAC voted on the RBWG's report, and recommended that FRA implement the RBWG's proposal of a set of ''Essential Elements of Railroad Bridge Management Programs,'' (Essential Elements) in FRA's Agency Policy on the Safety of Railroad Bridges.

The RBWG met again on January 28–29, 2009, and February 23–24, 2009, to recommend rule text to address the RSIA's mandate to FRA in Section 417 to promulgate bridge safety regulations. The RBWG reached consensus on proposed regulatory text which makes up the basis of this NPRM. However, there were four items that the RBWG was not able to agree upon. The RBWG could not reach consensus with regard to §§ 237.111(d), 237.111(e), 237.157(a) and 237.157(b). FRA requests that the public comment specifically on these items.

IV. Section-by-Section Analysis

Appendix C to Part 213

FRA proposes to remove appendix C to part 213, which is FRA's Statement of Agency Policy on the Safety of Railroad Bridges (''policy statement''). As many portions of the text in the policy statement will be covered in part 237, it would be redundant and confusing to leave them in the policy statement as currently published in part 213. With regard to the portions of the policy statement that are advisory in nature, FRA is proposing to publish them in a new appendix to part 237, which will be discussed further below.

Section 237.1 Scope

In this section, FRA proposes the purpose for the minimum standards required under this part for management of railroad bridges. Railroads can adopt more stringent standards as long as they are in accordance with this part.

Section 237.5 Application

FRA proposes that this rule will apply to all owners of track on bridges which carry railroad track with certain exceptions as outlined or explained in following subsections. As delineated in FRA's Statement of Agency Policy Concerning Enforcement of the Federal Railroad Safety Laws at appendix A of 49 CFR part 209, FRA exercises jurisdiction over tourist, scenic, and excursion railroad operations whether or not they are conducted on the general railroad system. FRA proposes that this part apply to tourist railroads because the passengers on those railroads are entitled to the protection afforded by this rule.

Paragraph (b). FRA proposes that this part not apply to bridges on track used exclusively for rapid transit operations in urban areas that are not connected with the general system of transportation. This is in accordance with appendix A of 49 CFR 209.

Section 237.7 Responsibility for Compliance

FRA proposes that the responsibility for the safety of trains on any track lies with the owner of that track. Therefore, the track owner is responsible for complying with the bridge safety standards promulgated in this part. If a bridge carries tracks owned by two or more owners, then the track owner can choose to make an assignment of responsibility for compliance with this part. FRA proposes that the assignment process, delineated in paragraphs (b) through (d) of this section, be similar to the assignment process detailed in 49 CFR 213.5. However, FRA proposes to be able to hold the track owner or the assignee or both responsible for compliance with this part and subject to penalties under section 237.11. FRA intends that the responsibility for compliance with this part will follow, as closely as practicable, the responsibility for compliance with the Federal Track Safety Standards, and that where such responsibility is already assigned, it would not be necessary for the track owner to file an additional assignment of responsibility. As in part 213, FRA intends that ''person'' means an entity of any type covered under 1 U.S.C. 1, including but not limited to the following: a railroad; a manager, supervisor, official, or other employee or agent of a railroad; any owner, manufacturer, lessor, or lessee of railroad equipment, track or facilities; any independent contractor providing goods or services to a railroad; any employee of such owner, manufacturer, lessor, lessee, or independent contractor; and anyone held by the FRA to be responsible for compliance with this part.

During meetings with the RBWG, FRA staff initially proposed holding the ''bridge owner'' as the party responsible for compliance with part 237, and had defined the ''bridge owner'' as the ''owner of track to which this part applies.'' After reviewing RSAC's recommendation, FRA determined that this definition could cause confusion, as the bridge owner might not be the party who owned the track supported by the bridge. FRA has proposed instead to hold the ''track owner'' responsible for compliance with this part.

Paragraph (d). FRA proposes that a common carrier by railroad which is directed by the Surface Transportation Board to provide service over the track of another railroad under 49 U.S.C. 11123 is considered the owner of that track for the purposes of the application of this part during the period the directed service order remains in effect. On rare occasions, such as a cessation of service by a railroad, the Surface Transportation Board has directed a railroad other than the track owner to provide service. In such cases, the designated operator shall be considered the owner for purposes of compliance with the bridge safety regulations.

Section 237.9 Definitions

FRA proposes that the definitions in this section are only intended to apply to this part, and not to alter the same terminology wherever used outside this part for other purposes.

Bridge modification and repair. FRA proposes that *bridge modification* means a change to the configuration of a railroad bridge that affects the load capacity of the bridge. FRA proposes that *bridge repair* means remediation of damage or deterioration which has affected the structural integrity of a railroad bridge. FRA proposes that this part requires that modifications and repairs to bridges be designed by railroad bridge engineers, and the work supervised by designated bridge supervisors. This definition clarifies that minor modifications and repairs, such as replacing a wire rope handrail with one made of pipe, or painting a bridge, do not need to be designed and supervised pursuant to this part. However, this does not exempt the track owner from properly supervising the personal safety of the individuals performing the work because that issue is addressed in other rules.

Railroad bridge. FRA proposes to define a ''railroad bridge'' as all structures over openings under the track except small culverts, pipes, or such other structures that are located so far below the track that they only carry dead load from soil pressure, and are not subjected to bending, tension or compression stresses from passing trains. FRA does not intend to relieve a railroad from taking any action necessary to protect the safety of trains in the case of any structure, including

small culverts, by providing for their inspection and maintenance, but it exempts them from the specific requirements of this regulation.

Section 237.11 Penalties

FRA proposes that this provision conform to provisions of the enabling legislation and stated agency policy. Consistent with FRA's Statement of Agency Policy Concerning Enforcement of the Federal Railroad Safety Laws, a penalty may be assessed against an individual only for a willful violation. The Administrator reserves the right to assess a penalty of up to $100,000 for any violation where circumstances warrant. *See* 49 CFR part 209, appendix A.

Section 237.13 Waivers

FRA proposes that each petition for a waiver under this section shall be filed in the manner and contain the information required by 49 CFR part 211, which prescribes rules of practice that apply to waiver proceedings. The processing of petitions for waiver of safety rules is found at subpart C to part 211.

Section 237.31 Scope

It should be noted here that FRA is proposing minimum requirements to assure the structural integrity of railroad bridges and to protect the safe operation of trains over those bridges. The responsibility for the safety of a railroad bridge rests with the owner of the track supported by that bridge and the engineer who makes the critical decisions regarding the management and use of that bridge.

Section 237.33 Adoption of Bridge Management Programs

Congress mandated that FRA ''promulgate a regulation requiring owners of track carried on one or more railroad bridges to adopt a bridge safety management program to prevent the deterioration of railroad bridges and reduce the risk of human casualties, environmental damage, and disruption to the Nation's railroad transportation system that would result from a catastrophic bridge failure.'' Public Law 110–432, Division A, Section 417(a). FRA proposes to require track owners to adopt a bridge safety management program that prevents the deterioration of railroad bridges by preserving their capability to safely carry the traffic to be operated over them. FRA is proposing that Class I carriers and owners of track segments which are part of the general railroad system of transportation and which carry more than ten scheduled passenger trains per week implement their bridge safety programs by six months after the final rule's effective date. FRA proposes that Class II carriers which carry less than 10 scheduled passenger trains per week implement their bridge safety programs by twelve months after the final rule's effective date. Finally, FRA proposes that all other track owners subject to this part implement their bridge safety programs by 24 months after the final rule's effective date.

FRA has proposed an implementation schedule which is considered realistic, with priorities given to railroads with the highest levels of freight or passenger traffic. The implementation dates apply to the bridge owning entity, not to specific track segments. However, it is reasonable to consider that the specific provisions of each program will be implemented in a manner that accords higher priority to individual track segments with high volumes of freight or passenger traffic.

Section 237.35 Content of Bridge Management Programs

Certain elements of a bridge management program are essential to its effectiveness. Those elements are enumerated in this section. Track owners and individuals responsible for the safety of railroad bridges are encouraged to adapt these elements to the needs of their areas of responsibility, and to adopt additional elements not inconsistent with the requirements of this part.

Paragraph (a). Congress mandated that the new regulations require each track owner to ''develop and maintain an accurate inventory of its railroad bridges, which shall identify the location of each bridge, its configuration, type of construction, number of spans, span lengths, and all other information necessary to provide for the safe management of the bridges.'' Public Law 110–432, Division A, Section 417(b)(1). FRA proposes that such an inventory be maintained. An accurate inventory of any property to be managed is essential so that the responsible individuals may schedule and track inspection, maintenance and repair of the property units.

Paragraph (b). Congress mandated that the new regulations require that the track owner ''maintain, and update as appropriate, a record of the safe capacity of each bridge which carries its track and, if available, maintain the original design documents of each bridge and a documentation of all repairs, modifications, and inspections of the bridge.'' Public Law 110–432, Division A, Section 417(b)(3). FRA proposes that a record of the safe load capacity of each bridge be established. The operation of excessively heavy loads over a bridge will seriously shorten its useful life and will reduce or even eliminate the margin of safety between structural integrity and catastrophic failure. It is essential that the track owner should know that the loads permitted to be operated on a bridge are within the safe limits of the bridge.

Paragraph (c). FRA proposes that the track owner obtain and maintain the design documents of each bridge, if available, and to document all repairs, modifications, and inspections of each bridge. The determination of safe load capacity requires knowledge of the configuration of the bridge and the materials of which it is constructed. Although the configuration may be determined by actual measurements of all of the components, that procedure can be tedious and expensive. Good documentation of the design and history of a bridge will enable rapid and accurate determination of bridge capacity when such calculations are needed, as well as determination of the maintenance and service history of a bridge to detect and correct possible deterioration of its components.

Paragraph (d). Bridge inspection is absolutely essential to an effective bridge management program. In this paragraph, FRA proposes that the track owner's bridge management program contain a bridge inspection program. Items (1) through (6) should be addressed in the program to the degree that promotes effective and efficient conduct of the inspection program. With regard to item (1), bridge inspection can present certain risks that are inherent in working at heights and around moving vehicles. A bridge inspection program should at least address the unique hazards associated with the process. With regard to item (2), a bridge inspection program should incorporate standards for the procedures and required details of any different types of inspection that are referenced in the program, such as annual inspections, post-event inspections, rating inspections and intermediate periodic inspections. A large railroad might find it convenient to describe the standard procedures for various types of inspections in some detail, while a small railroad that normally conducts only annual inspections might describe only that procedure as well as post-event special inspections, and then issue instructions of particular applicability for other types of inspections that occur only infrequently. With regard to items (3) through (6), use of a standard method of describing the condition of components

promotes effective and efficient communication between the inspector and the persons who review and evaluate a bridge using information from the inspection.

Section 237.51 Scope

In subpart C, FRA proposes minimum standards for incorporation in railroad bridge management programs for qualification and designations of persons who perform safety critical functions that affect the integrity and safety of railroad bridges. Many aspects of railroad bridge work differ from other fields of engineering, inspection and maintenance. It is essential that the individuals who are responsible for these safety-critical functions be qualified by education, training and experience to perform them correctly.

Section 237.53 Railroad Bridge Engineers

In this section, FRA proposes the minimum standards that a railroad bridge engineer must meet. Congress directed FRA to ''ensure that an engineer who is competent in the field of railroad bridge engineering'' is responsible for the development of all inspection procedures, reviews all inspection reports, and determines whether bridges are being inspected according to the applicable procedures and frequency, and reviews any items noted by an inspector as exceptions. Section 417(b)(7) of the RSIA. Railroad bridge engineering is based on the same principles of engineering as all other structural engineering work, but the application of many of those principles is unique to this particular field. The live loads carried on railroad bridges are generally much higher than the loads on highway bridges or other transportation structures. Overall configuration and details of construction of railroad bridges differ greatly from other classes of structures, to the extent that dealing with these features requires some experience with them as well as an understanding of the fundamentals of engineering.

FRA understands that not all railroad bridge engineers will be faced with all aspects of railroad bridge engineering. For example, an engineer engaged to prescribe safe loads for short steel spans and timber trestles on a particular railroad might never have to perform a detailed analysis of a large truss bridge. The basic premise is that the engineer be competent to perform the functions that are encompassed by that individual's employment or engagement. The determination of qualifications by the track owner includes either employment or engagement of the engineer by the track owner, and designation of the engineer to exercise the authority called for in this part.

Paragraph (b) of this section was added by FRA to the text recommended by the RSAC. FRA proposes that a railroad bridge engineer must also have either: (1) A bachelor's degree in engineering granted by a school of engineering with at least one program accredited or recognized by the Accreditation Board for Engineering and Technology (ABET) as a professional engineering curriculum; or (2) current registration as a professional engineer practicing within his or her licensed scope of practice. FRA believes that the critical nature of railroad bridge engineering work called for in this proposed rule requires persons who meet a minimal educational or experience standard which is common to the engineering profession and which is necessary for an individual who will perform the functions of an engineer as called for in this proposed rule. FRA developed this paragraph from the U.S. Office of Personnel Management's Basic Requirements for Federal Service's classification of an engineer.

In paragraph (c), FRA proposes that nothing in this part is meant to affect the States' authority to regulate the licensure of professional engineers. This section represents a minimum standard to be attained by engineers who perform the functions called for in this regulation. Recognition by FRA as a railroad bridge engineer would not enable a person to provide professional engineering services in violation of a State law or regulation. FRA does not intend to pre-empt or interfere with any State laws regarding the professional practice of engineering.

As the RBWG did not discuss the language in paragraphs (b) and (c) of this section, FRA welcomes public comment on the proposed regulatory text.

Section 237.55 Railroad Bridge Inspectors

In this section, FRA proposes the minimum standards that a railroad bridge inspector must meet. Effective inspection of bridges is essential to preserving their integrity and serviceability. Inspectors must be able to understand and carry out the inspection procedure, including accessing inspection points on a bridge, measuring components and any changes, describing conditions found in a standard, unambiguous manner, and detecting the development of conditions that are critical to the safety of the bridge. It is essential that an inspector who detects a potential hazard to the safe operation of trains should be authorized by the track owner to place appropriate restrictions on the operation of railroad traffic pending review as necessary by a railroad bridge engineer. An individual who is not competent in railroad bridge work should not be permitted to overrule a determination made by a designated bridge inspector, supervisor or engineer.

Section 237.57 Railroad Bridge Supervisors

In this section, FRA proposes minimum standards that a railroad bridge supervisor must meet. Individuals who supervise and take responsibility for construction, repair and modification of railroad bridges must be competent to ensure that the work is performed in accordance with valid standards and any specific specifications, plans and instructions applicable to the work to be performed. This provision applies to any such individual, regardless of job title, who directly oversees such work and approves or restricts the movement of railroad traffic during the progress of the work.

Section 237.59 Designations of Individuals

In the RSIA, Congress mandated that the bridge regulations designate qualified bridge inspectors or maintenance personnel to authorize the operation of trains on bridges following repairs, damage, or indications of potential structural problems. Public Law 110–432, Division A, Section 417(b)(8). In this section, FRA proposes that each track owner designate certain individuals as qualified railroad bridge engineers, inspectors, and supervisors, and provide a recorded basis for each designation in effect. The track owner must record designations of individuals, whether employees, consultants or contractors. If a consultant or contractor has several individuals performing the described functions under a contract or other engagement, then one or more individuals should be designated as being responsible to the track owner for the work performed under that engagement, with the others working under the responsible charge of that individual.

237.71 Scope

In subpart D, FRA proposes to prescribe minimum standards to be incorporated in railroad bridge management programs to prevent the operation of equipment that could damage a bridge by exceeding safe stress levels in bridge components or by

extending beyond the horizontal or vertical clearance limits of the bridge. Protection of bridges and bridge components from overstress is essential to the continued integrity and serviceability of the bridge. It is also essential that equipment or loads that exceed the clearance limits of a bridge not be operated owing to the potential for severe damage to the bridge.

Section 237.73 Determination of Bridge Load Capacities

Paragraph (a). In this paragraph, FRA proposes that each track owner determine the load capacity of each of its railroad bridges. It is essential that the track owner know that loads operated over a bridge not exceed the safe capacity of that bridge. However, once it is determined that a bridge has adequate capacity to carry the loads being operated, FRA proposes not to require that any additional effort be expended to precisely calculate the additional capacity of that bridge although that might well be useful from a planning or economic standpoint.

Paragraph (b). In this paragraph, FRA proposes that the load capacity of each bridge be documented in the track owner's bridge management programs, together with the method by which the capacity was determined. Once the load capacity is determined, the value must be recorded in order for it to be useful. Examples of methods of determination could be the original design documents, recalculation, or rating inspection.

Paragraph (c). In the RSIA, Congress mandated that a professional engineer competent in the field of railroad bridge engineering, or a qualified person under the supervision of the track owner, determine bridge capacity. Public Law 110–432, Division A, Section 417(b)(2). Load capacity determination in most instances requires the education, experience and training of an engineer who is familiar with railroad bridges and the standard practices that are unique to that class of structure.

The present standard references for railroad bridge design and analysis are found in the ''Manual for Railway Engineering'' of the American Railway Engineering and Maintenance of Way Association (AREMA). The chapters in this Manual dealing with Timber, Concrete and Steel structures, and Seismic Design, are under continuous review by committees consisting of leading engineers in the railroad bridge profession, including representatives of FRA. Although bridges exist that were designed using different or earlier references, they can still be evaluated by use of the AREMA Manual.

Paragraph (d). In this paragraph, FRA proposes that bridge load capacity shall be determined from existing design and modification records of a bridge, provided that the bridge substantially conforms to its records configuration. Determination of bridge load capacity requires information on the configuration of the bridge and the dimensions and material of its component parts. If the bridge is found to conform to the drawings of its original design and modifications, those drawings may serve as the basis for any rating calculation that might be performed, thus simplifying the process. Lacking that prior information, it is necessary that the configuration, dimensions and properties of the bridge and its components be determined by on-site measurement of the bridge as it currently exists.

Paragraph (e). In this paragraph, FRA proposes that a track owner shall schedule the evaluation of bridges for which the load capacity has not already been determined. This section provides for a phase-in period for determination of bridge capacities. There is probably not sufficient engineering expertise available in the United States for immediate rating of all unrated railroad bridges. This will provide a reasonable time period for track owners to accomplish this work. It is intended that the unrated bridges be given relative priority for rating, based on the judgment of a railroad bridge engineer. This prioritization can be accomplished either by observation or by evaluation of certain critical members of a bridge, as determined by the engineer using professional judgment.

Paragraph (f). FRA proposes that a new capacity must be determined by a railroad bridge engineer when a bridge inspection record reveals that the condition of a bridge or a bridge component might affect the load capacity of the bridge. Accurate determination of current bridge capacity depends on accurate information about the current configuration and condition of the bridge. The engineer might determine that a change in condition or configuration calls for a revised rating calculation.

Paragraph (g). In this paragraph, FRA proposes that bridge load capacity may be expressed in terms of numerical values related to a standard system of bridge loads, but shall in any case be stated in terms of weight and length of individual or combined cars and locomotives, for the use of transportation personnel. Engineers use standard definitions of loading combinations for design and rating of bridges. Common among these standard definitions is a series of proportional loads known as the Cooper System. The capacity of a bridge and its components can be described in terms of a Cooper Rating, and the effect of a load on a bridge can also be related to a Cooper System value.

Proper application of this system requires a full understanding of its use and limitations. However, the results of its application can be translated into terms of equipment weights and configurations that can be effectively applied by persons who manage regular transportation operations of the railroad. This enables them to determine if a given locomotive, car or combination can be operated on a bridge with no further consideration, or if the equipment must be evaluated as an exceptional movement.

Paragraph (h). FRA proposes that bridge load capacity may be expressed in terms of both normal and maximum load conditions. Normal bridge ratings generally define the loads that can be operated on a bridge for an indefinite period without damaging the bridge. In some cases, mostly involving steel or iron bridges, a higher rating, up to a maximum rating, can be given to the bridge to permit the operation of heavier loads on an infrequent basis. These heavier loads should not, in themselves, damage the bridge, but the cumulative effect of the higher resulting stresses in bridge members could cause their eventual deterioration.

In this paragraph, FRA also proposes that operation of equipment that produces forces greater than the normal capacity shall be subject to any restrictions or conditions that may be prescribed by a railroad bridge engineer. An engineer can often prescribe compensating conditions that will permit the movement of equipment that is heavier than normal. Examples include speed restrictions to reduce the impact factor of the rolling load, the insertion of lighter-weight spacer cars between the heavier cars in a train, or the installation of temporary bents or other supports under specific points on the bridge.

Section 237.75 Protection of Bridges from Over-Weight and Over-Dimension Loads

Bridges can be seriously damaged by the operation of loads that exceed their capacity. Movement of equipment that exceeds the clear space on a bridge is an obvious safety hazard. In this section, FRA addresses Congress' mandate in the RSIA that the track owner ''develop, maintain, and enforce a written procedure that will ensure that its bridges are not loaded beyond their

capacities.'' Public Law 110–432, Division A, Section 417(b)(4).

Paragraph (a). In this paragraph, FRA proposes that each track owner shall issue instructions to its personnel who are responsible for the consist and operation of trains over its bridges to prevent the operation of cars, locomotives and other equipment that would exceed the capacity or dimensions of its bridges. Transportation personnel of a railroad are ultimately responsible for the movement of trains, cars and locomotives. It is essential that they should know and follow any restrictions that are placed on those movements.

Paragraph (b). In this paragraph, FRA proposes that the instructions regarding weight shall be expressed in terms of maximum equipment weights, and either minimum equipment lengths or axle spacing. Transportation personnel have information on the weights and configuration of cars and locomotives, and they must be able to relate that information to any restrictions placed on the movement of that equipment.

Paragraph (c). In this paragraph, FRA proposes that the instructions regarding dimensions shall be expressed in terms of feet and inches of cross section and equipment length, in conformance with common railroad industry practice for reporting dimensions of exceptional equipment in interchange in which height above top-of-rail is shown for each cross section measurement, followed by the width of the car or the shipment at that height. In the industry, a standard format exists for the exchange of information on dimensions of railroad equipment. This standard practice is practical, even if it is not intuitive. Use of the industry practice is necessary to avoid error and confusion.

Paragraph (d). In this paragraph, FRA proposes that the instructions may apply to individual structures or to a defined line segment or groups of line segments where the published capacities and dimensions are within the limits of all structures on the subject line segments. Railroads commonly issue instructions related to equipment weights and dimensions to be effective on line segments of various lengths. It is not necessary that transportation personnel be advised of the capacity of every bridge as long as each bridge in the line segment has the capacity to safely carry the loads permitted on that line.

Section 237.101 Scope

In subpart E, FRA proposes minimum standards to be incorporated into railroad bridge management programs to provide for an effective program of bridge inspections. Bridge inspection is a vital component in any bridge management program. A bridge with undetected or unreported damage or deterioration can present a serious hazard to the safe operation of trains. Bridge inspection and evaluation is a multi-tiered process, unlike many other types of inspection on a railroad. Where track, equipment and signal inspectors usually can compare measurements against common standards to determine whether the inspected feature complies with the standards, such is not the case with most bridges. The evaluation of a bridge requires the application of engineering principles by a competent person, who is usually not present during the inspection. It is therefore necessary that an inspection report should show any conditions on the bridge that might lead to a reduction in capacity, initiation of repair work, or a more detailed inspection to further characterize the condition.

Section 237.103 Scheduling of Bridge Inspections

Paragraph (a). In this paragraph, FRA proposes regulations to address Congress' mandate that the track owner ''conduct regular comprehensive inspections of each bridge, at least once every year, and maintain records of those inspections that include the date on which the inspection was performed, the precise identification of the bridge inspected, the items inspected, and accurate description of the condition of those items, and a narrative of any inspection item that is found by the inspector to be a potential problem.'' Public Law 110–432, Division A, Section 417(b)(5). Annual inspection of bridges has been an industry practice for over a century, and has proven to be an effective tool of bridge management. Even where a bridge sees very low levels of railroad traffic, the potential still exists for damage from external sources or natural deterioration. This paragraph calls for one inspection per calendar year, with not more than 540 days between successive inspections. Both criteria apply. For example, if a bridge is inspected on January 2, 2009, it becomes overdue for inspection on June 27, 2010, 541 days later. If it is inspected on December 18, 2011, it becomes overdue on January 1, 2013, since it was not inspected in calendar year 2012.

Paragraph (b). In this paragraph, FRA proposes that a bridge shall be inspected more frequently than the period referenced in paragraph (a), above, when a railroad bridge engineer determines that such inspection frequency is necessary. The responsibility for adequate inspection remains with the track owner, with the conditions prescribed by a railroad bridge engineer. The inspection regimen for every bridge should be determined from its condition, configuration, environment and traffic levels.

Paragraph (c). FRA proposes that each bridge management program define requirements for the special inspection of a bridge to be performed whenever the bridge is involved in an event which might have compromised the integrity of the bridge, including flood, fire, earthquake, derailment, or other vehicular or vessel impact. It is essential that railroad traffic be protected from possible bridge failure caused by damage from an event caused by natural or non-railroad agents. The track owner should have in place a means to receive notice of such an event, including weather and earthquakes, and a procedure to conduct an inspection following such an event.

Paragraph (d). In this paragraph, FRA proposes that any railroad bridge that has not been in railroad service and has not been inspected in accordance with this section within the previous 540 days be inspected and the inspection report reviewed by a railroad bridge engineer prior to the resumption of railroad service. The inspection frequency requirements of this section do not apply to bridges that are not in railroad service, but that does not relieve a track owner from responsibility for any damage to outside parties that might be caused by the condition of the bridge. If a bridge not in service has been inspected within the 540 day period, the track owner may accept that inspection and begin railroad service, subject to any determination in that regard by a railroad bridge engineer. The inspection period would date from the last inspection, with no credit for out-of-service time.

Section 237.105 Bridge Inspection Procedures

In this section, FRA proposes that each bridge management program specify the procedure to be used for inspection of individual bridges or classes and types of bridges. As mandated by the RSIA, FRA proposes that the bridge inspection procedures must be as specified by a railroad bridge engineer who is designated as responsible for the conduct and review of the inspections. Public Law 110–432, Division A, Section 417(b)(7)(A). In the RSIA, Congress also mandated that the bridge safety regulations must ''ensure that the level of detail and the inspection procedures are appropriate to the configuration of the bridge,

conditions found during the previous inspections, and the nature of the railroad traffic moved over the bridge, including car weights, train frequency and lengths, levels of passenger and hazardous materials traffic, and vulnerability of the bridge to damage.'' Accordingly, FRA proposes that the bridge inspection procedures must ensure that the level of detail and the inspection procedures are appropriate to the configuration of the bridge. Additionally, the bridge inspection procedures must be designed to detect, report and protect deterioration and deficiencies before they present a hazard to safe train operation. The responsibility for adequate inspection remains with the track owner, with the conditions prescribed by a railroad bridge engineer. The inspection regimen for every bridge should be determined from its condition, configuration, environment and traffic levels. The instructions for bridge inspection may be both general, as by bridge type or line segment; and specific as needed by particular considerations for an individual bridge.

Section 237.107 Special Inspections

Paragraph (a). In this paragraph, FRA proposes that each bridge management program prescribe a procedure for protection of train operations and for inspection of any bridge that might have been damaged by a natural or accidental event, including flood, fire, earthquake, derailment or vehicular or vessel impact. It is essential that railroad traffic be protected from possible bridge failure caused by damage from an event caused by natural or non-railroad agents. The track owner should have in place a means to receive notice of such an event, including weather and earthquakes, and a procedure to conduct an inspection following such an event.

Paragraph (b). In this paragraph, FRA proposes that each bridge management program provide for the detection of scour or deterioration of bridge components that are submerged or subject to water flow. The condition of bridge components located under water is usually not evident from above. Means to determine their condition might be as simple as using measuring rods from the surface, or might call for periodic or special diving inspection. Advanced technology might also provide devices that can be used to determine underwater conditions.

Section 237.109 Conduct of Bridge Inspections

In this section, FRA proposes that bridge inspections be conducted under the direct supervision of a designated bridge inspector, who shall be responsible for the accuracy of the results and the conformity of the inspection to the bridge management program. Bridge inspections can often require more than one person for safety and efficiency. This provision permits others to assist the designated inspector, who remains responsible for the results of the inspection.

Section 237.111 Bridge Inspection Records

In this section, FRA proposes that each track owner to which this part applies keep a record of each inspection required to be performed on those bridges under this part. A bridge inspection has little value unless it is recorded and reported to the individuals who are responsible for the ultimate determination of the safety of the bridge. Bridge inspectors may use a variety of methods to record their findings as they move about the bridge. These include notebooks, voice recordings, having another individual transcribe notes, and photographs. These notes and other items are usually compiled into a prescribed report form at the end of the day or at the conclusion of the inspection. In paragraph (c), FRA delineates the essential elements that must be addressed and reported in any bridge inspection.

Paragraph (d). In this paragraph, FRA proposes that an initial report of each bridge inspection be placed in the location designated by the bridge management program within 14 calendar days of the completion of the field portion of the inspection. The initial report must include the information delineated in paragraph (c)(1) through (c)(5). The RBWG did not reach consensus on this item. FRA drafted this provision with the intent that the actual conduct of the inspection should be reported and recorded, showing the fact that the bridge was actually inspected on a certain date, the type of inspection performed, by whom it was performed, and whether or not any critical conditions were detected. Inspection and reporting procedures vary widely among different railroads and circumstances. In many cases, especially on larger railroads, an inspector would prepare the report before leaving the bridge. The reports might be forwarded by mail, by electronic means, or by hand delivery. They might be forwarded daily, weekly, or even less frequently. In other circumstances, a consulting engineer might be engaged by a small railroad to inspect all of the bridges on all or part of the line, and the final report might be prepared by the engineering firm after all of the inspections are completed. Similarly, a large railroad might begin a comprehensive inspection and evaluation of a large structure that will take several months to complete.

FRA recognizes the wide range of time periods required for these various inspections and reporting procedures, so this provision was recommended as a means for the track owner to track inspection progress, bridge by bridge, with a simple line item showing:

(1) The identification of the bridge inspected.

(2) The date of completion of the inspection.

(3) The identification of the inspector.

(4) The type of inspection performed.

(5) An indication on the report as to whether any item noted thereon requires expedited or critical review by a railroad bridge engineer, and any restrictions placed at the time of the inspection.

These five items can usually be listed on a single line of a report, which might include all of the bridges inspected by one individual in a week or two. The report could be transmitted to the track owner by U.S. Mail or electronically. FRA does not anticipate that the initial or summary report include all of the data called for in the bridge management program, together with any narrative descriptions necessary for the correct interpretation of the report. This information would be included in the complete inspection report. As consensus was not reached by the RBWG, FRA particularly requests comments on this issue.

Paragraph (e). The RBWG did not reach consensus on paragraph (e). In this paragraph, FRA proposes that a complete report of each bridge inspection shall be placed in the location designated in the bridge management program within 45 days of the completion of the field portion of the inspection. FRA stipulates that a bridge inspection is not complete until the report of the inspection is filed and available to the persons who are responsible for the management of the bridges inspected. This time period does not include the time used by a consultant or in-house engineering group to complete an analysis of the results of the inspection, and it is not expected that the analysis need be completed within that time period. In cases where a detailed analysis is required, FRA intends that the inspection report on which the analysis is based would be separated from the analysis and filed within the required time frame. As consensus was not reached by the RBWG, FRA requests comments with regard to this issue.

Paragraph (f). FRA proposes that each bridge inspection program shall specify the retention period and location for bridge inspection records. There are several good reasons for retaining bridge inspection reports over the period of several years or inspection cycles. First, a comparison of successive reports can reveal any accelerating rates of deterioration or degradation of bridge components. Second, an audit or review of the effectiveness of a bridge inspection program requires comparison of previous inspection reports with the actual condition of a bridge included in the audit. The practice of comparing previous inspection reports with actual bridge conditions has been followed by FRA for more than a decade when evaluating railroad bridge management programs. It is provides a valuable factor in determining the effectiveness of a railroad's program.

Section 237.113 Review of Bridge Inspection Reports

The RSIA requires that an engineer who is competent in the field of railroad bridge engineering review all inspection reports and determine whether bridges are being inspected according to the applicable procedures and frequencies, and review any items noted by an inspector as exceptions. Public Law 110–432, Division A, Section 417(b)(7). In this section, FRA proposes that responsible railroad bridge supervisors and railroad bridge engineers review bridge inspection reports. Bridge inspection is usually a multi-tiered procedure. The inspector reports on the conditions noted in the inspection, but an engineer will necessarily evaluate those noted conditions and determine what, if any, further action is required.

FRA does not intend that a railroad bridge engineer must review every inspection report, so long as the responsible management personnel keep track of the conduct of inspections to see that they are performed in accordance with the schedule and other requirements of this rule and the railroad's program. It should be a simple matter for the inspector to indicate on a report whether or not the report would require higher-level or engineering review. That could provide that the engineering staff would review the reports that indicate problems or issues for them to resolve, and would relieve the engineers from reviewing a majority of the reports that do not indicate an issue needing their review. Section 237.155 audits of inspections, which follow, would include a provision for sampling of routine inspection reports to assure that the inspectors are properly identifying reports that require higher-level review.

Section 237.131 Scope

In subpart F, FRA proposes minimum standards to be incorporated in railroad bridge management programs to provide for adequate design and effective supervision of bridge modification and repair which will materially modify the capacity of the bridge or the stresses in any primary load carrying component of the bridge. This section provides for correct design and adequate supervision of repair and modification of bridges where the work could materially affect the capacity of the bridge, or its continued integrity. FRA does not intend that minor repairs that do not affect the capacity of the bridge must be designed by an engineer, but the supervision of that work should be performed by a person who is competent to assure that the work does not inadvertently compromise the integrity of the bridge. For instance, arc welding handrails to the members of a through truss might appear to some to be a minor repair, but it could seriously compromise the structural integrity of the bridge.

Section 237.133 Design

In this section, FRA proposes that each repair or modification to a bridge pursuant to this part shall be designed by a railroad bridge engineer. Design of entire railroad bridges, modifications and repairs which materially modify the capacity of the bridge or the stresses in any primary load-carrying component of the bridge require the intelligent application of the principles of engineering and can only be performed by an engineer with training and experience in the field of railroad bridges. Railroads have typically issued standard instructions for the performance of common maintenance repairs, such as replacement or upgrading of components of timber trestles. This section specifically permits such a practice.

Section 237.135 Supervision of Repairs and Modifications

In this section, FRA proposes that each repair or modification pursuant to this part shall be performed under the immediate supervision of a railroad bridge supervisor as defined in § 237.57 of this part and who is designated and authorized by the track owner to supervise the particular work to be performed. Modifications and repairs which materially modify the capacity of the bridge or the stresses in any primary load-carrying component of the bridge must be performed according to the specific or general specifications and instructions issued by a railroad bridge engineer. Particularly when trains are permitted to pass over a bridge which is being repaired or modified, the supervisor at the bridge must be able to make the necessary determination to either permit, restrict or halt train operation depending on the state of the bridge.

Section 237.151 Scope

Documentation is essential to any effective management program. In subpart G, FRA proposes minimum standards to be incorporated in railroad bridge management programs to provide for verification of the effectiveness of the program and the accuracy of the information developed thereby, by the track owner and by FRA to evaluate compliance with this regulation.

Section 237.153 Audits, General

In this section, FRA proposes that each program adopted to comply with this part include provisions for auditing the effectiveness of the several provisions of that program, including the validity of bridge inspection reports and bridge inventory data, and the correct application of movement restrictions to railroad equipment of exceptional weight or configuration. Effective management of a safety-critical program such as this requires an adequate level of checks to assure that the requisite work is being performed correctly.

Section 237.155 Audits of Inspections

FRA has found over the years during which it has conducted evaluations of railroad bridge programs that one of the most important indicators of the effectiveness of a program is a comparison of recent bridge inspection reports against actual conditions found at the subject bridges. This is fundamental to an effective audit of a bridge management program. Therefore, in this section, FRA proposes that each bridge management program incorporate provisions for an internal audit.

Section 237.157 Documents and Records

In this section, FRA proposes that each track owner required to implement a bridge management program and keep records under this part make those program documents and records available for inspection and reproduction by the FRA. This section addresses Congress' mandate in the RSIA to establish a program to periodically review bridge inspection and maintenance data from railroad carrier bridge inspectors and FRA bridge

experts. Public Law 110–432, Division A, Section 417(d). As in the case of all railroad safety regulations, FRA has an enforcement responsibility. FRA will require access to the vital documents and records of the various bridge management programs to enable it to carry out that responsibility.

Paragraphs (a) and (b). In these paragraphs, FRA proposes minimum standards for electronic record-keeping provisions that a track owner may elect to utilize to comply with the record-keeping provisions of this part. The RBWG was unable to reach consensus on these paragraphs. FRA therefore solicits comments on whether or not this provision is needed to protect the utility, integrity and security of an electronic recordkeeping system that would be applied to a railroad bridge management system.

Appendix A to Part 237—Statement of Agency Policy on the Safety of Railroad Bridges

A Statement of Agency Policy on the Safety of Railroad Bridges was originally published by FRA in 2000 as Appendix C of the Federal Track Safety Standards, 49 CFR Part 213. With the issuance of 49 CFR Part 237, Railroad Bridge Safety Standards, certain non-regulatory provisions in that Policy Statement have been incorporated in that regulation. However, FRA has determined that other non-regulatory items are still useful as information and guidance. Those provisions of the Policy Statement are therefore retained and placed in this Appendix in lieu of their former location in the Track Safety Standards. FRA requests comment on this appendix, and is interested in whether the public sees value in having this additional guidance.

Appendix B to Part 237—Schedule of Civil Penalties

Appendix B to part 237 will contain a schedule of civil penalties for use in connection with this part. Consistent with FRA's Statement of Agency Policy Concerning Enforcement of the Federal Railroad Safety Laws, a penalty may be assessed against an individual only for a willful violation. The Administrator reserves the right to assess a penalty of up to $100,000 for any violation where circumstances warrant. *See* 49 CFR part 209, appendix A.

V. Regulatory Impact and Notices

A. Executive Order 12866 and DOT Regulatory Policies and Procedures

This proposed rule has been evaluated in accordance with existing policies and procedures and determined to be non-significant under both Executive Order 128566 and DOT policies and procedures. *See* 44 FR 11034; February 26, 1979. FRA has prepared and placed in the docket a regulatory impact analysis addressing the economic impacts from this proposed rule.

As part of the regulatory impact analysis FRA has assessed quantitative measurements of the cost and benefit streams expected from the adoption of this proposed rule. For the twenty-year period the estimated quantified costs total $159.2 million, and have a present value (PV, 7%) of $80.5 million. For the same period of time the estimated quantified benefits total $19.4 million and have a PV(7%) of $9.8 million. These benefits are exclusive of long-term efficiencies to the railroads with respect to conservation of the capital value of the structures in question. Very often targeted repairs or restoration at an early stage in the deterioration of a bridge may significantly extend the useful life of a bridge. The benefits also do not consider the potential for a catastrophic event resulting in a bridge failure and consequent fatalities to railroad personnel, rail passengers, or persons underneath the bridge. Although FRA has verified through its bridge program that most railroads properly manage their bridges most of the time, in the recent past FRA has also determined circumstances—even on Class I railroads—where proper inspections or repairs have been inappropriately deferred. Accordingly, this rule offers the opportunity to capture and extend the current heightened attention to bridge management achieved through industry and FRA efforts over the past several years.

B. Regulatory Flexibility Act and Executive Order 13272; Initial Regulatory Flexibility Assessment

The Regulatory Flexibility Act (5 U.S.C. 601 *et seq.*) and Executive Order 13272 require a review of proposed and final rules to assess their impacts on small entities. An agency must prepare an initial regulatory flexibility analysis (IRFA) unless it determines and certifies that a rule, if promulgated, would not have a significant impact on a substantial number of small entities. DOT has not determined whether this proposed rule would have a significant economic impact on a substantial number of small entities. Therefore, we are publishing this IRFA to aid the public in commenting on the potential small business impacts of the proposals in this NPRM. We invite all interested parties to submit data and information regarding the potential economic impact that would result from adoption of the proposals in this NPRM. We will consider all comments received in the public comment process when making a determination in the final Regulatory Flexibility Assessment (RFA).

In accordance with the Regulatory Flexibility Act, an IRFA must contain:

(1) A description of the reasons why action by the agency is being considered;

(2) A succinct statement of the objectives of, and the legal basis for, the proposed rule;

(3) A description of, and where feasible, an estimate of the number of small entities to which the proposed rule will apply;

(4) A description of the projected reporting, recordkeeping and other compliance requirements of the proposed rule, including an estimate of the classes of small entities that will be subject to the requirement and the type of professional skills necessary for preparation of the report or record;

(5) An identification, to the extent practicable, of all relevant Federal rules that may duplicate, overlap, or conflict with the proposed rule; and

(6) A description of any significant alternatives to the proposed rule that accomplish the stated objectives of applicable statutes and which minimize any significant economic impact of the proposed rule on small entities. 5 U.S.C. 603(b), (c).

1. Reasons for Considering Agency Action

As discussed in section I of the preamble to the notice of proposed rulemaking, the structural integrity of bridges that carry railroad tracks is important because the severity of a train accident is usually compounded when a bridge is involved, regardless of the cause of the accident. In 2000, FRA published a final statement of agency policy for the safety of railroad bridges establishing criteria to ensure the structural integrity of bridges that carry railroad tracks. RSIA 2008 directs FRA to issue, by October 16, 2009, regulations requiring railroad track owners to adopt and follow specific procedures to protect the safety of their bridges.

There are over 100,000 railroad bridges in the United States. Federal regulations offer the benefit of uniformity that would allow railroads that operate in more than one State to develop and implement a single management program that would apply to all of their railroad bridges, which support one or more tracks, rather than more than one program each tailored to

meet the different requirements of different State or local jurisdictions.

2. Objectives and Legal Basis for Proposed Rule

(a). Legal Basis for Proposed Rule

As discussed earlier in the preamble, FRA is issuing this proposed rule to promulgate minimum bridge safety standards as mandated by the Railroad Safety Improvement Act of 2008 section 417, Public Law 110–432 (Oct. 16, 2008) (codified at 9 U.S.C. 20157).

(b). Objective of Proposed Rule

As stated in the RSIA 2008, the objective of this rulemaking is to prevent the deterioration of railroad bridges and reduce the risk of human casualties, environmental damage, and disruption to the Nation's railroad transportation system that would result from a catastrophic bridge failure.

3. Description and Estimate of Small Entities Affected

The ''universe'' of the entities to be considered in an IRFA generally includes only those small entities that can reasonably be expected to be directly regulated by the proposed action. Two types of small entities are potentially affected by this proposed rule: (1) Railroads that own track supported by a bridge, and (2) governmental jurisdictions of small communities that own bridges.

''Small entity'' is defined in 5 U.S.C. 601. Section 601(3) defines a ''small entity'' as having the same meaning as ''small business concern'' under section 3 of the Small Business Act. This includes any small business concern that is independently owned and operated, and is not dominant in its field of operation. Section 601(4) includes not-for-profit enterprises that are independently owned and operated, and are not dominant in their field of operations within the definition of ''small entities.'' Additionally, section 601(5) defines as ''small entities'' governments of cities, counties, towns, townships, villages, school districts, or special districts with populations less than 50,000.

The U.S. Small Business Administration (SBA) stipulates ''size standards'' for small entities. It provides that the largest a for-profit railroad business firm may be (and still classify as a ''small entity'') is 1,500 employees for ''Line-Haul Operating'' railroads, and 500 employees for ''Short-Line Operating'' railroads.[1]

SBA size standards may be altered by Federal agencies in consultation with SBA, and in conjunction with public comment. Pursuant to the authority provided to it by SBA, FRA has published a final policy, which formally establishes small entities as railroads that meet the line haulage revenue requirements of a Class III railroad.[2] Currently, the revenue requirements are $20 million or less in annual operating revenue, adjusted annually for inflation. The $20 million limit (adjusted annually for inflation) is based on the Surface Transportation Board's threshold of a Class III railroad carrier, which is adjusted by applying the railroad revenue deflator adjustment.[3] The same dollar limit on revenues is established to determine whether a railroad shipper or contractor is a small entity. DOT proposes to use this definition for this rulemaking.

(a). Governmental Jurisdictions of Small Communities

Small entities that are classified as governmental jurisdictions of small communities may also be affected by the proposals in this NPRM. As stated above, and defined by SBA, this term refers to governments of cities, counties, towns, townships, villages, school districts, or special districts with populations of less than 50,000. The potential impact of this rulemaking to these entities is related to their ownership of a bridge and possibly the track supported by the bridge as well. Such bridges are usually built by communities, with railroad collaboration, to achieve highway-rail grade separation. FRA does not have information regarding the number of small communities that own such bridges. In such cases, however, the government entity and the railroad usually apportion ownership, expenses and maintenance responsibility according to the provisions of an order from the State regulatory agency that governs highway/railroad crossing improvements. It is most common for the railroad to retain the responsibility for the actual inspection and management of the bridge. To the extent that agreements require cost-sharing and existing bridge management programs would have to be enhanced to meet the proposed regulation, there may be some burden passed on to small government jurisdictions; however, such burden is not expected to be substantial. To the extent that any burden does result, it is likely that insurance premiums will be adjusted to reflect the risk reduction, resulting in some level of savings in addition to the cost of the program enhancement. This would, of course, be in addition to safety benefits related to fewer accidents.

Accordingly, FRA cannot accurately assess the number of governmental jurisdictions of small communities that would be directly impacted by this proposed regulation and what the impact would be. FRA requests comment from affected governmental jurisdictions as to the impact the proposed rule will have on them.

(b). Railroads

There are approximately 687 small railroads meeting the definition of ''small entity'' as described above. FRA estimates that approximately 95 percent of these small entities, or approximately 653, own track supported by a bridge. Because the proposed rule would apply to all of these small railroads, we have concluded that a substantial number of such entities would be impacted. Note, however, that approximately 90 of these railroads are subsidiaries of large short-line holding companies with the expertise and resources comparable to larger railroads. In addition, absent this rulemaking, most railroads that own track supported by bridges, including many of the railroads identified as small entities, would to some extent voluntarily incur the expense associated with implementation of the bridge management programs in accordance with the requirements proposed by FRA to address the risk associated with structural failure of a bridge. In fact, the ASLRRA, which represents most of the small railroads impacted by this rulemaking, has developed a model bridge management program intended to keep bridge and culvert infrastructure safe and structurally sound. Member railroads are expected to take the generic plan and customize to meet their specific circumstances and meet the requirements proposed in this notice. Such initiative would minimize the program development cost. Nevertheless, program implementation costs may be substantial for those small railroads that do not currently have bridge management programs and do not inspect railroad bridges regularly.

While we recognize that some small railroads do not currently have bridge management programs, we believe that many railroads have already made or are making the transition to track structures and bridges capable of handling 286,000-pound cars in line with the general movement in the industry toward these heavier freight cars. To protect such investments, which are

[1] ''Table of Size Standards,'' U.S. Small Business Administration, January 31, 1996, 13 CFR Part 121. *See also* NAICS Codes 482111 and 482112.

[2] *See* 68 FR 24891 (May 9, 2003).

[3] For further information on the calculation of the specific dollar limit, please *see* 49 CFR Part 1201.

usually quite significant, railroads are already implementing bridge management programs.

For example, in 2005, the Texas Transportation Institute reported that 42 percent of the short-line railroad miles that were operated in Texas that year had already been upgraded, nine percent would not need an upgrade, and 47 percent needed upgrading if they wanted to transport any type of 286,000-pound shipments.[4] In addition, the results of a 1998–1999 survey conducted by the ASLRRA indicated that 41 percent of respondent short-line railroads could handle 286,000-pound rail cars and 87 percent of the respondent short-line railroads indicated that they would need to accommodate 286,000-pound railcars in the future.[5]

In addition, at least one Class I railroad has arranged for short-line and regional railroads that connect with it to send participants to several multi-day bridge inspection classes this year.

In general, implementation of the proposed rule will significantly burden only a small portion of the small railroads potentially affected. We invite commenters to submit information that might assist us in assessing the cost impacts on small railroads of the proposals in this NPRM.

4. Description of Reporting, Recordkeeping, and Other Compliance Requirements and Impacts on Small Entities Resulting From Specific Proposed Requirements

The impacts from this proposed rulemaking would primarily result from complying with the requirements for the adoption of bridge management programs. The proposed rule provides affected entities 6 to 24 month periods of time in which to adopt such programs. Class III railroads would have the full 24 month period.

(a). Recordkeeping Requirement of Proposed § 237.35

Proposed § 237.35 requires that each bridge management program include an accurate inventory of railroad bridges; a record of the safe load capacity of each bridge; a provision to obtain and maintain the design documents of each bridge if available, and to document all repairs, modifications, and inspections of each bridge; and a bridge inspection program covering the method of documenting inspections including standard forms and formats.

FRA believes that most railroads, regardless of size, already maintain an accurate inventory of their railroad bridges, records of the safe load capacity of their bridges, and design documents to the extent they are available. Likewise, most railroads maintain documents related to all repairs, modifications, and inspections of bridges because it is good business practice to do so. The States of Ohio, Michigan, and New York have existing bridge regulations requiring railroads to maintain bridge inventories and inspect bridges annually. There are approximately 100 small railroads that operate in those States. However, some railroads may not include in their documentation some of the particular data items specified in the proposal. Thus these requirements would impose a nominal additional recordkeeping burden on some small railroads.

As noted above not all small railroads have inspection programs. The ASLRRA, however, has developed a model program for its members, thus minimizing the burden associated with development of such plans. FRA estimates that the burden for individual railroad customization of the program would range from $570, for the smaller Class III railroads, to $3,000 for the larger Class III railroads. Costs associated with maintenance, modifications and updates to bridge management plans will average approximately 15% of the initial development costs, or between $85 and $450 annually. Therefore, this reporting requirement would have very little impact on small entities.

Determination of bridge load capacity would be made by a bridge engineer, who is a person that is determined by the bridge owner to be competent to perform the functions necessary for the determination of load capacity. Bridge inspection procedures would be specified by a railroad bridge engineer who is designated as responsible for the conduct and review of the inspections.

(b). Bridge Inspections

Bridge management programs would be required to contain bridge inspection programs. Proposed subpart E requires calendar year inspection of bridges according to specified procedures as well as special inspection of bridges that might be damaged by a natural or accidental event. This subpart also specifies that bridge inspections must be conducted under the direct supervision of a designated bridge inspector who is a person determined to be technically competent to supervise the construction, modification or repair of a railroad bridge. FRA expects there would be a significant increase in the number of bridge inspections conducted by small railroads or their contractors. FRA requests comments and input regarding the extent to which Class III railroads already conduct annual inspection of bridges and the extent to which they would have to conduct additional bridge inspections.

Most small railroads do not have bridge engineers or inspectors on staff. They contract out bridge inspections. A typical contract will be for the inspection of most if not all the bridges the railroad owns, with delivery of a final report addressing the state of all bridges. Interim reports may be provided to the railroad as necessary on bridges requiring more immediate attention. FRA believes that small railroads will take advantage of such flexibility and require contractors to file interim reports.

Some States provide short-line railroads funding via grants and loans for infrastructure improvements including bridge rehabilitation; track maintenance; and bridge inspection. For instance, the Tennessee Department of Transportation (DOT) provides significant grants for such projects to most of the 20 Class III railroads in the State.[6] Pennsylvania DOT administers a matching grant program to support freight railroad maintenance and construction costs.

FRA believes that small railroads own or would otherwise be responsible for inspecting approximately 20,000 bridges. FRA estimates that the average cost per bridge inspection is $750 and that approximately 10,000 bridges are being inspected less frequently than once a year, while 5,000 are not inspected at all. Some small railroads may own track supported by several bridges, especially in some areas where the terrain requires such structures. FRA requests comment regarding the level of cost burden that the proposed annual inspection would impose.

(c). Determination of Bridge Load Capacities

Proposed Subpart D requires the determination of bridge load capacities. FRA believes that railroad bridge owners are generally aware of bridge load capacities. Nevertheless, it is likely that some railroads will have to take action to verify this information in order

[4] Jeffrey E. Warner & Manuel Solari Terra, ''Assessment of Texas Short Line Railroads,'' Texas Transportation Institute (Nov. 15, 2005).

[5] The Ten-Year Needs of Short Line and Regional Railroads, Standing Committee on Rail Transportation, American Association of State Highway and Transportation Officials, Washington, DC (Dec. 1999). This report was based on a survey conducted by the ASLRRA in 1998 and 1999 with data from 1997.

[6] U.S. General Accounting Office, ''Railroad Bridges and Tunnels, Federal Role in Providing Safety Oversight and Freight Infrastructure Investment Could Be Better Targeted,'' August 2007 (GAO–07–770).

to develop the type of documentation required by this subpart. Bridge load capacity information is vital to ensuring that safe capacity is not exceeded. Small railroads impacted by this requirement would likely have a contractor perform such calculations.

(d). Repair and Modification of Bridges

Proposed Subpart F prescribes minimum standards for the bridge modification and repair that will materially modify the capacity of a bridge or the stresses in any primary load carrying component of the bridge. Modifications and repairs to bridges (except for minor modifications and repairs) would have to be designed by railroad bridge engineers, and the work would have to be supervised by designated bridge supervisors. Small railroads will generally contract out such modifications and repairs. Contractors as common practice meet the design and supervision requirements proposed. Thus, the additional cost of such compliance with this requirement is not important to this assessment. DOT believes that there would be no additional burden imposed on small entities as a result of this requirement.

(e). Audits

Each program would have to include provisions for auditing the effectiveness of several provisions of the program, including the validity of bridge inspection reports and bridge inventory data, and the correct application of movement restrictions to railroad equipment of exceptional weight or configuration. FRA anticipates that Class III railroad audits would generally be performed by a company official following guidance in the ASLRRA model program and without assistance from an external financial or engineering auditor.

5. Identification of Relevant Duplicative, Overlapping, or Conflicting Federal Rules

There are no Federal rules that would duplicate, overlap, or conflict with this proposed rule.

6. Alternatives Considered

In proposed § 237.33, FRA sets the schedule for railroads to adopt bridge safety management programs. In consideration of the impact on small railroads that may not already have such programs, this schedule provides small railroads with an additional 18 months over Class I carriers and an additional 12 months over Class II carriers to adopt these.

FRA has identified no additional significant alternative to the proposed rule which satisfies the mandate of RSIA 2008 or meets the agency's objective in promulgating this rule, and that would minimize the economic impact of the proposed rule on small entities. As in all aspects of this IRFA, FRA requests comments on this finding of no significant alternative related to small entities.

The process by which this proposed rule was developed provided outreach to small entities. As noted in section III of this notice, this notice was developed in consultation with industry representatives via the Railroad Safety Advisory Committee (RSAC), which includes small railroad representatives. On December 10, 2008 the RSAC referred to the Railroad Bridge Working Group, which had been established in March 2008, to develop a draft rule requiring owner of track carried on one or more railroad bridges to adopt a bridge safety management program to reduce the risk of human casualties, environmental damage, and disruption to the Nations' railroad transportation system that would result from catastrophic bridge failure. The Working Group met twice, on January 28–29, 2009 and February 23–25, 2009. Small railroad representatives participated in both meetings and raised issues of concern to small railroads. Of specific concern to small railroads that own several bridges and contract out the inspection of these bridges was the ability to continue to enter into such contractual agreements structured such that final inspection reports are submitted as part of a single report at the completion of the contract, which could span several months. This proposed rule takes into account this expressed concern and accommodates such current contract structures, as long as interim reports are filed.

Subsequent to publication of this notice of proposed rulemaking, FRA will hold a public hearing if it is requested. At that time, FRA will gather more information, including the rule's potential impact on small entities, and FRA encourages the active participation of any small entity potentially affected.

C. Paperwork Reduction Act

The information collection requirements in this proposed rule have been submitted for approval to the Office of Management and Budget (OMB) under the Paperwork Reduction Act of 1995, 44 U.S.C. 3501 *et seq.* The sections that would contain the new information collection requirements are noted, and the estimated times to fulfill each of the requirements are as follows:

CFR section	Respondent universe	Total annual responses	Average time per response	Total annual burden hours
237.7—Notifications to FRA of Assignment of Bridge Responsibility	727 Railroads	15 notifications	90 minutes	22.5
—Signed Statement by Assignee Concerning Bridge Responsibility	727 Railroads	15 signed statements.	30 minutes	7.5
237.13—Waivers—Petitions	727 Railroads	12 petitions	4 hours	48
237.33—Development/Adoption of Bridge Management Program	727 Railroads	727 plans	Varies	20,474
237.59—Designation of Qualified Individuals	727 Railroads	200 designations.	30 minutes	100
237.73—Determination of Bridge Load Capacities	727 Railroads	2,000 determinations.	8 hours	16,000
237.75—Issuance of Instructions to Railroad Personnel by Track Owner.	727 Railroads	2,000 instructions.	2 hours	4,000
237.107—Special Bridge Inspections and Reports/Records	727 Railroads	50 insp. and reports/rcds.	40 hours	2,000
237.109 and 237.111—Nationwide Annual Bridge Inspections—Reports.	727 Railroads	18,000 insp. and reports.	4 hours	72,000
—Records	727 Railroads	18,000 records	1 hour	18,000
237.113—Review of Bridge Inspection Reports by RR Bridge Engineers.	727 Railroads	2,000 insp. rpt. reviews.	30 minutes	1,000
—Prescription of Bridge Insp. Procedure Modifications After Review	727 Railroads	200 insp. proc. modifications.	30 minutes	100
237.133—Design of Bridge Modifications or Bridge Repairs	727 Railroads	500 designs	16 hours	8,000

CFR section	Respondent universe	Total annual responses	Average time per response	Total annual burden hours
237.155—Audits of Inspections	727 Railroads	727 insp. audits	80 hours/24 hours/6 hours.	5,746
237.157—Documents and Records —Establishment of RR Monitoring and Info. Technology Security Systems for Electronic Recordkeeping.	727 Railroads	5 systems	80 hours	400
—Employees Trained in System	727 Railroads	100 employees	8 hours	800

All estimates include the time for reviewing instructions; searching existing data sources; gathering or maintaining the needed data; and reviewing the information. Pursuant to 44 U.S.C. 3506(c)(2)(B), FRA solicits comments concerning: whether these information collection requirements are necessary for the proper performance of the functions of FRA, including whether the information has practical utility; the accuracy of FRA's estimates of the burden of the information collection requirements; the quality, utility, and clarity of the information to be collected; and whether the burden of collection of information on those who are to respond, including through the use of automated collection techniques or other forms of information technology, may be minimized. For information or a copy of the paperwork package submitted to OMB, contact Mr. Robert Brogan, Information Clearance Officer, at (202) 493–6292, or Ms. Nakia Jackson at (202) 493–6073.

Organizations and individuals desiring to submit comments on the collection of information requirements should direct them to Mr. Robert Brogan or Ms. Nakia Jackson, Federal Railroad Administration, 1200 New Jersey Avenue, SE., 3rd Floor, Washington, DC 20590. Comments may also be submitted via e-mail to Mr. Brogan or Ms. Jackson at the following addresses: *robert.brogan@dot.gov; nakia.jackson@dot.gov*.

OMB is required to make a decision concerning the collection of information requirements contained in this proposed rule between 30 and 60 days after publication of this document in the **Federal Register**. Therefore, a comment to OMB is best assured of having its full effect if OMB receives it within 30 days of publication. The final rule will respond to any OMB or public comments on the information collection requirements contained in this proposal.

FRA is not authorized to impose a penalty on persons for violating information collection requirements which do not display a current OMB control number, if required. FRA intends to obtain current OMB control numbers for any new information collection requirements resulting from this rulemaking action prior to the effective date of the final rule. The OMB control number, when assigned, will be announced by separate notice in the **Federal Register**.

D. Environmental Impact

FRA has evaluated this proposed rule in accordance with its ''Procedures for Considering Environmental Impacts'' (FRA's Procedures) (64 FR 28545, May 26, 1999) as required by the National Environmental Policy Act (42 U.S.C. 4321 *et seq.*), other environmental statutes, Executive Orders, and related regulatory requirements. FRA has determined that this action is not a major FRA action (requiring the preparation of an environmental impact statement or environmental assessment) because it is categorically excluded from detailed environmental review pursuant to section 4(c)(20) of FRA's Procedures. 64 FR 28547, May 26, 1999. In accordance with section 4(c) and (e) of FRA's Procedures, the agency has further concluded that no extraordinary circumstances exist with respect to this NPRM that might trigger the need for a more detailed environmental review. As a result, FRA finds that this proposed rule is not a major Federal action significantly affecting the quality of the human environment.

E. Federalism Implications

Executive Order 13132, ''Federalism'' (64 FR 43255, Aug. 10, 1999), requires FRA to develop an accountable process to ensure ''meaningful and timely input by State and local officials in the development of regulatory policies that have federalism implications.'' ''Policies that have federalism implications'' are defined in the Executive Order to include regulations that have ''substantial direct effects on the States, on the relationship between the national government and the States, or on the distribution of power and responsibilities among the various levels of government.'' Under Executive Order 13132, the agency may not issue a regulation with federalism implications that imposes substantial direct compliance costs and that is not required by statute, unless the Federal government provides the funds necessary to pay the direct compliance costs incurred by State and local governments, the agency consults with State and local governments, or the agency consults with State and local government officials early in the process of developing the regulation. Where a regulation has federalism implications and preempts State law, the agency seeks to consult with State and local officials in the process of developing the regulation.

This proposed rule has preemptive effect. Subject to a limited exception for essentially local safety or security hazards, the requirements of the final rule would be intended to establish a uniform Federal safety standard that must be met, and State requirements covering the same subject would be displaced, whether those standards are in the form of State statutes, regulations, local ordinances, or other forms of State law, including common law. Section 20106 of Title 49 of the United States Code provides that all regulations prescribed by the Secretary related to railroad safety preempt any State law, regulation, or order covering the same subject matter, except a provision necessary to eliminate or reduce an essentially local safety or security hazard that is not incompatible with a Federal law, regulation, or order, and that does not unreasonably burden interstate commerce. This is consistent with past practice at FRA, and within the Department of Transportation.

FRA has analyzed this proposed rule in accordance with the principles and criteria contained in Executive Order 13132. This final rule will not have a substantial effect on the States, on the relationship between the Federal government and the States, or on the distribution of power and responsibilities among various levels of government. This final rule will not have federalism implications that impose any direct compliance costs on State and local governments.

FRA notes that RSAC, which endorsed and recommended the majority of this final rule, has as permanent members two organizations representing State and local interests: AASHTO and ASRSM. Both of these State organizations concurred with the

RSAC recommendation endorsing this proposed rule. RSAC regularly provides recommendations to the FRA Administrator for solutions to regulatory issues that reflect significant input from its State members. To date, FRA has received no indication of concerns about the federalism implications of this rulemaking from these representatives or from any other representatives of State government. Consequently, FRA concludes that this proposed rule has no federalism implications.

This regulation does not preempt an action under State law seeking damages for personal injury, death, or property damage alleging that a party has failed to comply with the Federal standard of care established by this part, including a bridge management program required by this part. Provisions of a bridge management program which exceed the requirements of this part are not included in the Federal standard of care. It is strongly in the interest of railroad safety for railroads to exceed the requirements of Federal law and FRA encourages railroads to do so. A railroad would be discouraged from setting a higher standard for itself if it would be held liable in tort for exceeding the requirements of Federal law, but failing to attain the higher standard it set for itself. The statute supports this distinction.

It is a settled principle of statutory construction that, if the statute is clear and unambiguous, it must be applied according to its terms. *Carcieri* v. *Salazar*, 555 U.S.—(2009). Read by itself, Section 20106(a) preempts State standards of care, but does not expressly state whether anything replaces the preempted standards of care for purposes of tort suits. The focus of that provision is clearly on who regulates railroad safety: the Federal government or the States. It is about improving railroad safety, for which Congress deems nationally uniform standards to be necessary in the great majority of cases. That purpose has collateral consequences for tort law which new Section 20106 subsections (b) and (c) address. New subsection (b)(1) creates three exceptions to the possible consequences flowing from subsection (a). One of those exceptions ((b)(1)(B)) precisely addresses an issue presented in *Lundeen* v. *Canadian Pacific Ry. Co.*, 507 F.Supp.2d 1006 (D.Minn., 2007) Congress wished to rectify: it allows plaintiffs to sue a railroad in tort for violation of its own plan, rule, or standard that it created pursuant to a regulation or order issued by either of the Secretaries. None of those exceptions covers a plan, rule, or standard that a regulated entity creates for itself in order to produce a higher level of safety than Federal law requires, and such plans, rules, or standards were not at issue in *Lundeen*. The key concept of section 20106(b) is permitting actions under State law seeking damages for personal injury, death, or property damage to proceed using a Federal standard of care. A plan, rule, or standard that a regulated entity creates pursuant to a Federal regulation logically fits the paradigm of a Federal standard of care—Federal law requires it and determines its adequacy. A plan, rule, or standard, or portions of one, that a regulated entity creates on its own in order to exceed the requirements of Federal law does not fit the paradigm of a Federal standard of care—Federal law does not require it and, past the point at which the requirements of Federal law are satisfied, says nothing about its adequacy. That is why FRA believes section 20106(b)(1)(B) covers the former, but not the latter. The basic purpose of the statute—improving railroad safety—is best served by encouraging regulated entities to do more than the law requires and would be disserved by increasing the potential tort liability of regulated entities that choose to exceed Federal standards, which would discourage them from ever exceeding Federal standards again.

In this manner, Congress adroitly preserved its policy of national uniformity of railroad safety regulation expressed in Section 20106(a)(1) and assured plaintiffs in tort cases involving railroads, such as *Lundeen*, of their ability to pursue their cases by clarifying that Federal railroad safety regulations preempt the standard of care, not the underlying causes of action in tort. Under this interpretation, all parts of the statute are given meanings that work together effectively and serve the safety purposes of the statute.

F. Unfunded Mandates Reform Act of 1995

Pursuant to Section 201 of the Unfunded Mandates Reform Act of 1995 (Pub. L. 104–4, 2 U.S.C. 1531), each Federal agency ''shall, unless otherwise prohibited by law, assess the effects of Federal regulatory actions on State, local, and Tribal governments, and the private sector (other than to the extent that such regulations incorporate requirements specifically set forth in law).'' Section 202 of the Act (2 U.S.C. 1532) further requires that ''before promulgating any general notice of proposed rulemaking that is likely to result in the promulgation of any rule that includes any Federal mandate that may result in the expenditure by State, local, and Tribal governments, in the aggregate, or by the private sector, of $100,000,000 or more (adjusted annually for inflation) [currently $141,300,000] in any 1 year, and before promulgating any final rule for which a general notice of proposed rulemaking was published, the agency shall prepare a written statement'' detailing the effect on State, local, and Tribal governments and the private sector. This proposed rule will not result in the expenditure, in the aggregate, of $141,300,000 or more in any one year, and thus preparation of such a statement is not required.

G. Energy Impact

Executive Order 13211 requires Federal agencies to prepare a Statement of Energy Effects for any ''significant energy action.'' *See* 66 FR 28355 (May 22, 2001). Under the Executive Order a ''significant energy action'' is defined as any action by an agency that promulgates or is expected to lead to the promulgation of a final rule or regulation, including notices of inquiry, advance notices of proposed rulemaking, and notices of proposed rulemaking: (1)(i) That is a significant regulatory action under Executive Order 12866 or any successor order, and (ii) is likely to have a significant adverse effect on the supply, distribution, or use of energy; or (2) that is designated by the Administrator of the Office of Information and Regulatory Affairs as a significant energy action. FRA has evaluated this proposed rule in accordance with Executive Order 13211. FRA has determined that this proposed rule is not likely to have a significant adverse effect on the supply, distribution, or use of energy. Consequently, FRA has determined that this proposed rule is not a ''significant energy action'' within the meaning of the Executive Order.

H. Privacy Act Statement

Anyone is able to search the electronic form of all comments received into any of DOT's dockets by the name of the individual submitting the comment (or signing the comment, if submitted on behalf of an association, business, labor union, *etc*). You may review DOT's complete Privacy Act Statement published in the **Federal Register** on April 11, 2000 (Volume 65, Number 70, Pages 19477–78), or you may visit *http://DocketsInfo.dot.gov.*

List of Subjects

49 CFR Part 213

Penalties, Railroad safety, Reporting and recordkeeping requirements.

49 CFR Part 237

Penalties, Railroad safety, Bridge safety, Reporting and recordkeeping requirements.

The Proposed Rule

In consideration of the foregoing, FRA proposes to amend chapter II, Subtitle B, of title 49 of the Code of Federal Regulations as follows.

PART 213—[AMENDED]

1. The authority citation for part 213 continues to read as follows:

Authority: 49 U.S.C. 20102–20114 and 20142; 28 U.S.C. 2461, note; and 49 CFR 1.49(m).

Appendix C—[Removed]

2. In part 213, remove appendix C.
3. Add part 237 to read as follows:

PART 237—BRIDGE SAFETY STANDARDS

Subpart A—General

Sec.
237.1 Scope of part.
237.3 Preemptive effect.
237.5 Application.
237.7 Responsibility for compliance.
237.9 Definitions.
237.11 Penalties.
237.13 Waivers.
237.15 Information collection [reserved].

Subpart B—Railroad Bridge Safety Assurance

237.31 Scope.
237.33 Adoption of bridge management programs.
237.35 Content of bridge management programs.

Subpart C—Qualifications and Designations of Responsible Persons

237.51 Scope.
237.53 eRailroad bridge engineers.
237.55 Railroad bridge inspectors.
237.57 Railroad bridge supervisors.
237.59 Designation of individuals.

Subpart D—Capacity of Bridges

237.71 Scope.
237.73 Determination of bridge load capacities.
237.75 Protection of bridges from over-weight and over-dimension loads.

Subpart E—Bridge Inspection

237.101 Scope.
237.103 Scheduling of bridge inspections.
237.105 Bridge inspection procedures.
237.107 Special inspections.
237.109 Conduct of bridge inspections.
237.111 Bridge inspection records.
237.113 Review of bridge inspection reports.

Subpart F—Repair and Modification of Bridges

237.131 Scope.
237.133 Design.
237.135 Supervision of Repairs and Modifications.

Subpart G—Documentation, Records and Audits of Bridge Management Programs

237.151 Scope.
237.153 Audits, general.
237.155 Audits of inspections.
237.157 Documents and records.
Appendix A—Agency Policy on the Safety of Railroad Bridges
Appendix B—Schedule of Civil Penalties [reserved]

Authority: 49 U.S.C. 20102–20114; P.L. 110–432, section 417; 28 U.S.C. 2461, note; and 49 CFR 1.49(oo).

Subpart A—General

§ 237.1 Scope of part.

This part prescribes minimum safety requirements for management of railroad bridges which support one or more tracks. This part does not restrict a track owner from adopting and enforcing additional or more stringent requirements not inconsistent with this part.

§ 237.3 Preemptive effect.

(a) Under 49 U.S.C. 20106, issuance of these regulations preempts any State law, regulation, or order covering the same subject matter, except an additional or more stringent law, regulation, or order that is necessary to eliminate or reduce an essentially local safety hazard; is not incompatible with a law, regulation, or order of the United States Government; and that does not impose an unreasonable burden on interstate commerce.

(b) This part establishes a Federal standard of care for the maintenance and inspection of railroad bridges. This part does not preempt an action under State law seeking damages for personal injury, death, or property damage alleging that a party has failed to comply with the Federal standard of care established by this part, including a bridge management program required by this part. Provisions of a bridge management program which exceed the requirements of this part are not included in the Federal standard of care.

§ 237.5 Application.

(a) Except as provided in paragraphs (b) or (c) of this section, this part applies to all owners of railroad track with a gage of two feet or more and which is supported by a bridge.

(b) This part does not apply to bridges on track used exclusively for rapid transit operations in an urban area that are not connected with the general railroad system of transportation.

(c) This part does not apply to bridges located within an installation which is not part of the general railroad system of transportation and over which trains are not operated by a railroad.

§ 237.7 Responsibility for compliance.

(a) Except as provided in paragraph (b) of this section, an owner of track to which this part applies is responsible for compliance.

(b) If an owner of track to which this part applies assigns responsibility for the bridges which carry the track to another person (by lease or otherwise), written notification of the assignment shall be provided to the appropriate FRA Regional Office at least 30 days in advance of the assignment. The notification may be made by any party to that assignment, but shall be in writing and include the following—

(1) The name and address of the track owner;

(2) The name and address of the person to whom responsibility is assigned (assignee);

(3) A statement of the exact relationship between the track owner and the assignee;

(4) A precise identification of the track segment and the individual bridges in the assignment;

(5) A statement as to the competence and ability of the assignee to carry out the bridge safety duties of the track owner under this part; and

(6) A statement signed by the assignee acknowledging the assignment to him of responsibility for purposes of compliance with this part.

(c) The Administrator may hold the track owner or the assignee or both responsible for compliance with this part and subject to penalties under § 237.11.

(d) A common carrier by railroad which is directed by the Surface Transportation Board to provide service over the track of another railroad under 49 U.S.C. 11123 is considered the owner of that track for the purposes of the application of this part during the period the directed service order remains in effect.

(e) When any person, including a contractor for a railroad or track owner, performs any function required by this part, that person is required to perform that function in accordance with this part.

(f) Where an owner of track to which this part applies has previously assigned responsibility for a segment of track to another person as prescribed in 49 CFR 213.5(c), additional notification to FRA is not required, and the Administrator may hold the track owner or the assignee or both responsible for compliance with this part and subject to penalties under § 237.11.

§ 237.9 Definitions.

For the purposes of this part—

Bridge modification means a change to the configuration of a railroad bridge that affects the load capacity of the bridge.

Bridge repair means remediation of damage or deterioration which has affected the structural integrity of a railroad bridge.

Railroad bridge means any structure with a deck, regardless of length, which supports one or more railroad tracks, and any other undergrade structure with an individual span length of 10 feet or more located at such a depth that it is affected by live loads.

Track owner means a person responsible for compliance in accordance with § 237.7 of this chapter.

§ 237.11 Penalties.

(a) Any person who violates any requirement of this part or causes the violation of any such requirement is subject to a civil penalty of at least $650 and not more than $25,000 per violation, except that: Penalties may be assessed against individuals only for willful violations, and, where a grossly negligent violation or a pattern of repeated violations has created an imminent hazard of death or injury to persons, or has caused death or injury, a penalty not to exceed $100,000 per violation may be assessed. ''Person'' means an entity of any type covered under 1 U.S.C. 1, including but not limited to the following: a railroad; a manager, supervisor, official, or other employee or agent of a railroad; any owner, manufacturer, lessor, or lessee of railroad equipment, track, or facilities; any independent contractor providing goods or services to a railroad; any employee of such owner, manufacturer, lessor, lessee, or independent contractor; and anyone held by the Federal Railroad Administrator to be responsible under § 237.7(d). Each day a violation continues shall constitute a separate offense. *See* Appendix B to this part for a statement of agency civil penalty policy.

(b) Any person who knowingly and willfully falsifies a record or report required by this part may be subject to criminal penalties under 49 U.S.C. 21311.

§ 237.13 Waivers.

Each petition for a waiver under this section shall be filed in the manner and contain the information required by part 211 of this chapter.

§ 237.15 Information collection.

(a) The information collection requirements of this part were reviewed by the Office of Management and Budget pursuant to the Paperwork Reduction Act of 1995 (44 U.S.C. 3501 *et seq.*) and are assigned OMB control number XXXX–XXXX.

(b) The information collection requirements are found in the following sections: §§ 237.XX, 237.XX

Subpart B—Railroad Bridge Safety Assurance

§ 237.31 Scope.

This subpart prescribes minimum requirements for persons responsible for railroad bridges to implement programs to assure the structural integrity of those bridges and to protect the safe operation of trains over those bridges.

§ 237.33 Adoption of bridge management programs.

Each track owner shall adopt a bridge safety management program to prevent the deterioration of railroad bridges by preserving their capability to safely carry the traffic to be operated over them; and reduce the risk of human casualties, environmental damage, and disruption to the Nation's railroad transportation system that would result from a catastrophic bridge failure, not later than the dates in the following schedule:

(a) *(Effective date of the final rule + 6 months):* Class I carriers;

(b) *(Effective date of the final rule + 6 months):* Owners of track segments which are part of the general railroad system of transportation and which carry more than ten scheduled passenger trains per week;

(c) *(Effective date of the final rule + 12 months):* Class II carriers to which paragraph (b) of this section does not apply; and

(d) *(Effective date of the final rule + 24 months):* All other track owners subject to this part and not described above.

§ 237.35 Content of bridge management programs.

Each bridge management program adopted in compliance with this part shall include, as a minimum, the following provisions:

(a) An accurate inventory of railroad bridges, which shall include a unique identifier for each bridge, its location, configuration, type of construction, number of spans, span lengths, and all other information necessary to provide for the management of bridge safety;

(b) A record of the safe load capacity of each bridge;

(c) A provision to obtain and maintain the design documents of each bridge if available, and to document all repairs, modifications, and inspections of each bridge; and

(d) A bridge inspection program covering as a minimum;

(1) Inspection personnel safety considerations;

(2) Types of inspection including required detail;

(3) Definitions of defect levels along with associated condition codes if condition codes are used;

(4) The method of documenting inspections including standard forms or formats,;

(5) Structure type and component nomenclature; and

(6) Numbering or identification protocol for substructure units, spans, and individual components.

Subpart C—Qualifications and Designations of Responsible Persons

§ 237.51 Scope.

This subpart prescribes minimum standards to be incorporated in railroad bridge management programs for qualification and designation of persons who perform safety-critical functions that affect the integrity and safety of railroad bridges.

§ 237.53 Railroad bridge engineers.

(a) For the purpose of compliance with this part, a railroad bridge engineer shall be a person who is determined by the track owner to be competent to perform the following functions as they apply to the particular engineering work to be performed:

(1) Determine the forces and stresses in railroad bridges and bridge components;

(2) Prescribe safe loading conditions for railroad bridges;

(3) Prescribe inspection and maintenance procedures for railroad bridges; and

(4) Design repairs and modifications to railroad bridges.

(b) The educational qualifications of a railroad bridge engineer shall include either:

(1) A bachelor's degree in engineering granted by a school of engineering with at least one program accredited or recognized by the Accreditation Board for Engineering and Technology (ABET) as a professional engineering curriculum, or

(2) Current registration as a professional engineer practicing within his or her licensed scope of practice.

(b) Nothing in this part is meant to affect the States' authority to regulate the licensure of professional engineers.

§ 237.55 Railroad bridge inspectors.

A railroad bridge inspector shall be a person who is determined by the track

owner to be technically competent to view, measure, report and record the condition of a railroad bridge and its individual components which that person is designated to inspect. An inspector shall be designated to authorize or restrict the operation of railroad traffic over a bridge according to its immediate condition or state of repair.

§ 237.57 Railroad bridge supervisors.

A railroad bridge supervisor shall be a person, regardless of position title, who is determined by the track owner to be technically competent to supervise the construction, modification or repair of a railroad bridge in conformance with common or particular specifications, plans and instructions applicable to the work to be performed, and to authorize or restrict the operation of railroad traffic over a bridge according to its immediate condition or state of repair.

§ 237.59 Designations of individuals.

Each track owner shall designate those individuals qualified as railroad bridge engineers, railroad bridge inspectors and railroad bridge supervisors. Each individual designation shall include the basis for the designation in effect and shall be recorded.

Subpart D—Capacity of Bridges

§ 237.71 Scope.

This subpart prescribes minimum standards to be incorporated in railroad bridge management programs to prevent the operation of equipment that could damage a bridge by exceeding safe stress levels in bridge components or by extending beyond the horizontal or vertical clearance limits of the bridge.

§ 237.73 Determination of bridge load capacities.

(a) Each track owner shall determine the load capacity of each of its railroad bridges. The load capacity need not be the ultimate or maximum load capacity but a safe load capacity.

(b) The load capacity of each bridge shall be documented in the track owner's bridge management program, together with the method by which the capacity was determined.

(c) The determination of load capacity shall be made by a railroad bridge engineer using appropriate engineering methods and standards that are particularly applicable to railroad bridges.

(d) Bridge load capacity may be determined from existing design and modification records of a bridge, provided that the bridge substantially conforms to its recorded configuration. Otherwise, the load capacity of a bridge shall be determined by measurement and calculation of the properties of its individual components, or other methods as determined by a railroad bridge engineer.

(e) If a track owner has a group of bridges for which the load capacity has not already been determined, the owner shall schedule the evaluation of those bridges according to their relative priority, to be established by a railroad bridge engineer. The initial determination of load capacity shall be completed not later than five years following the date of initial adoption of the track owner's bridge management program in conformance with § 237.33 of this chapter.

(f) Where a bridge inspection reveals that the condition of a bridge or a bridge component might affect the load capacity of the bridge, a new capacity shall be determined by a railroad bridge engineer.

(g) Bridge load capacity may be expressed in terms of numerical values related to a standard system of bridge loads, but shall in any case be stated in terms of weight and length of individual or combined cars and locomotives, for the use of transportation personnel.

(h) Bridge load capacity may be expressed in terms of both normal and maximum load conditions. Operation of equipment that produces forces greater than the normal capacity shall be subject to any restrictions or conditions that may be prescribed by a railroad bridge engineer.

§ 237.75 Protection of bridges from over-weight and over-dimension loads.

(a) Each track owner shall issue instructions to its personnel who are responsible for the consist and operation of trains over its bridges to prevent the operation of cars, locomotives and other equipment that would exceed the capacity or dimensions of its bridges.

(b) The instructions regarding weight shall be expressed in terms of maximum equipment weights, and either minimum equipment lengths or axle spacing.

(c) The instructions regarding dimensions shall be expressed in terms of feet and inches of cross section and equipment length, in conformance with common railroad industry practice for reporting dimensions of exceptional equipment in interchange in which height above top-of-rail is shown for each cross section measurement, followed by the width of the car or the shipment at that height.

(d) The instructions may apply to individual structures, or to a defined line segment or group(s) of line segments where the published capacities and dimensions are within the limits of all structures on the subject line segments.

Subpart E—Bridge Inspection

§ 237.101 Scope.

This subpart prescribes minimum standards to be incorporated in railroad bridge management programs to provide for an effective program of bridge inspections.

§ 237.103 Scheduling of bridge inspections.

(a) Each bridge management program shall include a provision for scheduling an inspection for each bridge in railroad service at least once in each calendar year, with not more than 540 days between any successive inspections.

(b) A bridge shall be inspected more frequently when a railroad bridge engineer determines that such inspection frequency is necessary considering conditions noted on prior inspections, the type and configuration of the bridge, and the weight and frequency of traffic carried on the bridge.

(c) Each bridge management program shall define requirements for the special inspection of a bridge to be performed whenever the bridge is involved in an event which might have compromised the integrity of the bridge, including but not limited to flood, fire, earthquake, derailment or vehicular or vessel impact.

(d) Any railroad bridge that has not been in railroad service and has not been inspected in accordance with this section within the previous 540 days shall be inspected and the inspection report reviewed by a railroad bridge engineer prior to the resumption of railroad service.

§ 237.105 Bridge inspection procedures.

(a) Each bridge management program shall specify the procedure to be used for inspection of individual bridges or classes and types of bridges.

(b) The bridge inspection procedures shall be as specified by a railroad bridge engineer who is designated as responsible for the conduct and review of the inspections. The inspection procedures shall incorporate the methods, means of access, and level of detail to be recorded for the various components of that bridge or class of bridges.

(c) The bridge inspection procedures shall ensure that the level of detail and the inspection procedures are appropriate to the configuration of the bridge, conditions found during

previous inspections, and the nature of the railroad traffic moved over the bridge, including equipment weights, train frequency and length, levels of passenger and hazardous materials traffic, and vulnerability of the bridge to damage.

(d) The bridge inspection procedures shall be designed to detect, report and protect deterioration and deficiencies before they present a hazard to safe train operation.

§ 237.107 Special inspections.

(a) Each bridge management program shall prescribe a procedure for protection of train operations and for inspection of any bridge that might have been damaged by a natural or accidental event, including but not limited to flood, fire, earthquake, derailment or vehicular or vessel impact.

(b) Each bridge management program shall provide for the detection of scour or deterioration of bridge components that are submerged, or that are subject to water flow.

§ 237.109 Conduct of bridge inspections.

Bridge inspections shall be conducted under the direct supervision of a designated bridge inspector, who shall be responsible for the accuracy of the results and the conformity of the inspection to the bridge management program.

§ 237.111 Bridge inspection records.

(a) Each track owner to which this part applies shall keep a record of each inspection required to be performed on those bridges under this part.

(b) Each record of an inspection under the bridge management program prescribed in this part shall be prepared from notes taken on the day(s) the inspection is made, supplemented with sketches and photographs as needed. Such record will be dated with the date(s) the physical inspection takes place and signed or otherwise certified by the person making the inspection.

(c) Each bridge management program shall specify that every bridge inspection report shall include, as a minimum, the following information:

(1) A precise identification of the bridge inspected;

(2) The date on which the inspection was completed;

(3) The identification and written or electronic signature of the inspector;

(4) The type of inspection performed, in conformance with the definitions of inspection types in the bridge management program;

(5) An indication on the report as to whether any item noted thereon requires expedited or critical review by a railroad bridge engineer, and any restrictions placed at the time of the inspection; and

(6) The condition of components inspected, which may be in a condition reporting format prescribed in the bridge management program, together with any narrative descriptions necessary for the correct interpretation of the report.

(d) An initial report of each bridge inspection shall be placed in the location designated in the bridge management program within 14 calendar days of the completion of the inspection. The initial report shall include the information required by paragraphs (c)(1) through (c)(5) of this section.

(e) A complete report of each bridge inspection, including as a minimum the information required in paragraphs (c)(1) through (c)(6) of this section, shall be placed in the location designated in the bridge management program within 45 calendar days of the completion of the inspection.

(f) Each bridge inspection program shall specify the retention period and location for bridge inspection records. The retention period shall be no less than two years following the completion of the inspection, or until the completion of the next two inspections of the same type, whichever is longer.

§ 237.113 Review of bridge inspection reports.

Bridge inspection reports shall be reviewed by railroad bridge supervisors and railroad bridge engineers to:

(a) Determine whether inspections have been performed in accordance with the prescribed schedule and specified procedures;

(b) Evaluate whether any items on the report represent a present or potential hazard to safety;

(c) Prescribe any modifications to the inspection procedures for that particular bridge;

(d) Schedule any repairs or modifications to the bridge required to maintain its structural integrity; and

(e) Determine the need for further higher-level review.

Subpart F—Repair and Modification of Bridges

§ 237.131 Scope.

This subpart prescribes minimum standards to be incorporated in railroad bridge management programs to provide for adequate design and effective supervision of bridge modification and repair which will materially modify the capacity of the bridge or the stresses in any primary load-carrying component of the bridge.

§ 237.133 Design.

Each repair or modification to a bridge pursuant to this part shall be designed by a railroad bridge engineer. The design shall specify the manner in which railroad traffic or other live loads may be permitted on the bridge while it is being modified or repaired. Designs and procedures for repair or modification of bridges of a common configuration, such as timber trestles, or instructions for in-kind replacement of bridge components, may be issued as a common standard.

§ 237.135 Supervision.

Each repair or modification pursuant to this part shall be performed under the immediate supervision of a railroad bridge supervisor as defined in § 237.57 of this part and who is designated and authorized by the track owner to supervise the particular work to be performed. The railroad bridge supervisor shall ensure that railroad traffic or other live loads permitted on the bridge under repair or modification are in conformity with the specifications in the design.

Subpart G—Documentation, Records and Audits of Bridge Management Programs

§ 237.151 Scope.

This subpart prescribes minimum standards to be incorporated in railroad bridge management programs to provide for verification of the effectiveness of the program and the accuracy of the information developed thereby, by the track owner as well as by the Federal Railroad Administration.

§ 237.153 Audits; general.

Each program adopted to comply with this part shall include provisions for auditing the effectiveness of the several provisions of that program, including the validity of bridge inspection reports and bridge inventory data, and the correct application of movement restrictions to railroad equipment of exceptional weight or configuration.

§ 237.155 Audits of inspections.

(a) Each bridge management program shall incorporate provisions for an internal audit to determine whether the inspection provisions of the program are being followed, and whether the program itself is effectively providing for the continued safety of the subject bridges.

(b) The inspection audit shall include an evaluation of a representative sampling of bridge inspection reports at the bridges noted on the reports to determine whether the reports

accurately describe the condition of the bridge.

§ 237.157 Documents and records.

Each track owner required to implement a bridge management program and keep records under this part shall make those program documents and records available for inspection and reproduction by the Federal Railroad Administration.

(a) *Electronic recordkeeping; general.* For purposes of compliance with the recordkeeping requirements of this part, a railroad may create and maintain any of the records required by this part through electronic transmission, storage, and retrieval provided that all of the following conditions are met:

(1) The system used to generate the electronic record meets all requirements of this subpart;

(2) The electronically generated record contains the information required by this part;

(3) The railroad monitors its electronic records database through sufficient number of monitoring indicators to ensure a high degree of accuracy of these records; and

(4) The railroad shall train its employees who use the system on the proper use of the electronic recordkeeping system.

(5) The railroad maintains an information technology security program adequate to ensure the integrity of the system, including the prevention of unauthorized access to the program logic or individual records.

(b) *System security.* The integrity of the program and database must be protected by a security system that utilizes an employee identification number and password, or a comparable method, to establish appropriate levels of program access meeting all of the following standards:

(1) No two individuals have the same electronic identity;

(2) A record cannot be deleted or altered by any individual after the record is certified by the employee who created the record;

(3) Any amendment to a record is either—

(i) Electronically stored apart from the record that it amends, or

(ii) Electronically attached to the record as information without changing the original record;

(4) Each amendment to a record uniquely identifies the person making the amendment; and

(5) The electronic system provides for the maintenance of inspection records as originally submitted without corruption or loss of data.

Appendix A to Part 237—Supplemental Agency Statement of Policy on the Safety of Railroad Bridges

A Statement of Agency Policy on the Safety of Railroad Bridges was originally published by FRA in 2000 as Appendix C of the Federal Track Safety Standards, 49 CFR Part 213. With the promulgation of 49 CFR Part 237, Railroad Bridge Safety Standards, many of the non-regulatory provisions in that Policy Statement have been incorporated into the bridge safety standards.

However, FRA has determined that other non-regulatory items are still useful as information and guidance for track owners. Those provisions of the Policy Statement are therefore retained and placed in this Appendix in lieu of their former location in the Track Safety Standards.

General

1. The structural integrity of bridges that carry railroad tracks is important to the safety of railroad employees and to the public. The responsibility for the safety of railroad bridges is specified in § 237.7, ''Responsibility for Compliance.''

2. The capacity of a bridge to safely support its traffic can be determined only by intelligent application of engineering principles and the law of physics. Track owners should use those principles to assess the integrity of railroad bridges.

3. The long term ability of a structure to perform its function is an economic issue beyond the intent of this policy. In assessing a bridge's structural condition, FRA focuses on the present safety of the structure, rather than its appearance or long term usefulness.

4. FRA inspectors conduct regular evaluations of railroad bridge inspection and management practices. The objective of these evaluations is to document the practices of the evaluated railroad, to disclose any program weaknesses that could affect the safety of the public or railroad employees, and to assure compliance with the terms of this regulation. If the evaluation discloses problems, FRA seeks a cooperative resolution. If safety is jeopardized by a track owner's failure to resolve a bridge problem, FRA will use appropriate measures, including assessing civil penalties and issuance of emergency orders, to protect the safety of railroad employees and the public.

5. This policy statement addresses the integrity of bridges that carry railroad tracks. It does not address the integrity of other types of structures on railroad property (*i.e.* tunnels, highway bridges over railroads, or other structures on or over the right-of-way).

6. The guidelines published in this statement are advisory, rather than regulatory, in nature. They supplement the requirements of part 237 and are retained for information and guidance.

Guidelines

1. Responsibility for Safety of Railroad Bridges

(a) The responsibility for the safety of railroad bridges is specified in § 237.7.

(b) The track owner should maintain current information regarding loads that may be operated over the bridge, either from its own engineering evaluations or as provided by a competent engineer representing the track owner. Information on permissible loads may be communicated by the track owner either in terms of specific car and locomotive configurations and weights, or as values representing a standard railroad bridge rating reference system. The most common standard bridge rating reference system incorporated in the Manual for Railway Engineering of the American Railway Engineering and Maintenance of Way Association is the dimensional and proportional load configuration devised by Theodore Cooper. Other reference systems may be used where convenient, provided their effects can be defined in terms of shear, bending and pier reactions as necessary for a comprehensive evaluation and statement of the capacity of a bridge.

(c) The owner of the track on a bridge should advise other railroads operating on that track of the maximum loads permitted on the bridge stated in terms of car and locomotive configurations and weights. No railroad should operate a load which exceeds those limits without specific authority from, and in accordance with restrictions placed by, the track owner.

2. Capacity of Railroad Bridges

(a) The safe capacity of bridges should be determined pursuant to § 237.73.

(b) Proper analysis of a bridge requires knowledge of the actual dimensions, materials and properties of the structural members of the bridge, their condition, and the stresses imposed in those members by the service loads.

(c) The factors which were used for the design of a bridge can generally be used to determine and rate the load capacity of a bridge provided:

(i) The condition of the bridge has not changed significantly; and

(ii) The stresses resulting from the service loads can be correlated to the stresses for which the bridge was designed or rated.

3. Railroad Bridge Loads

(a) Control of loads is governed by § 237.75.

(b) *Authority for exceptions.* Equipment exceeding the nominal weight restriction on a bridge should be operated only under conditions determined by a competent railroad bridge engineer who has properly analyzed the stresses resulting from the proposed loads and has determined that the proposed operation can be conducted safely without damaging the bridge.

(c) *Operating conditions.* Operating conditions for exceptional loads may include speed restrictions, restriction of traffic from adjacent multiple tracks, and weight limitations on adjacent cars in the same train.

4. Railroad Bridge Records

(a) The organization responsible for the safety of a bridge should keep design, construction, maintenance and repair records readily accessible to permit the determination of safe loads. Having design or rating drawings and calculations that conform to the actual structure greatly simplifies the process of making accurate

determinations of safe bridge loads. This provision is governed by § 237.35.

(b) Organizations acquiring railroad property should obtain original or usable copies of all bridge records and drawings, and protect or maintain knowledge of the location of the original records.

5. Specifications for Design and Rating of Railroad Bridges

(a) The recommended specifications for the design and rating of bridges are those found in the Manual for Railway Engineering published by the American Railway Engineering and Maintenance-of-way Association. These specifications incorporate recognized principles of structural design and analysis to provide for the safe and economic utilization of railroad bridges during their expected useful lives. These specifications are continually reviewed and revised by committees of competent engineers. Other specifications for design and rating, however, have been successfully used by some railroads and may continue to be suitable.

(b) A bridge can be rated for capacity according to current specifications regardless of the specification to which it was originally designed.

6. Periodic Inspections of Railroad Bridges

(a) Periodic bridge inspections by competent inspectors are necessary to determine whether a structure conforms to its design or rating condition and, if not, the degree of nonconformity. *See* § 237.103. Section 237.103(a) calls for every railroad bridge to be inspected at least once in each calendar year. Deterioration or damage may occur during the course of a year regardless of the level of traffic that passes over a bridge. Inspections at more frequent intervals may be required by the nature or condition of a structure or intensive traffic levels.

7. Underwater Inspections of Railroad Bridges

(a) Inspections of bridges should include measuring and recording the condition of substructure support at locations subject to erosion from moving water.

(b) Stream beds often are not visible to the inspector. Indirect measurements by sounding, probing, or any other appropriate means are necessary in these cases. A series of records of these readings will provide the best information in the event unexpected changes suddenly occur. Where such indirect measurements do not provide the necessary assurance of foundation integrity, diving inspections should be performed as prescribed by a competent engineer.

8. Seismic Considerations

(a) Owners of bridges should be aware of the risks posed by earthquakes in the areas in which their bridges are located. Precautions should be taken to protect the safety of trains and the public following an earthquake.

(b) Contingency plans for seismic events should be prepared in advance, taking into account the potential for seismic activity in an area.

(c) The predicted attenuation of ground motion varies considerably within the United States. Local ground motion attenuation values and the magnitude of an earthquake both influence the extent of the area affected by an earthquake. Regions with low frequency of seismic events produce less data from which to predict attenuation factors. That uncertainty should be considered when designating the area in which precautions should be taken following the first notice of an earthquake. In fact, earthquakes in such regions might propagate their effects over much wider areas than earthquakes of the same magnitude occurring in regions with frequent seismic activity.

9. Special Inspections of Railroad Bridges

Requirements for special inspections of railroad bridges are found in § 237.107.

10. Railroad Bridge Inspection Records

(a) The requirement for recording and reporting bridge inspections is found in § 237.111.

(b) Information from bridge inspection reports should be incorporated into a bridge management program to ensure that exceptions on the reports are corrected or accounted for. A series of inspection reports prepared over time should be maintained so as to provide a valuable record of trends and rates of degradation of bridge components. The reports should be structured to promote comprehensive inspections and effective communication between an inspector and an engineer who performs an analysis of a bridge.

(c) An inspection report should be comprehensible to a competent person without interpretation by the reporting inspector.

11. Railroad Bridge Inspectors and Engineers

(a) Bridge inspections should be performed by technicians whose training and experience enable them to detect and record indications of distress on a bridge. Inspectors should provide accurate measurements and other information about the condition of the bridge in enough detail so that an engineer can make a proper evaluation of the safety of the bridge. Qualifications of personnel are addressed in Subpart C to part 237.

(b) Accurate information about the condition of a bridge should be evaluated by an engineer who is competent to determine the capacity of the bridge. The inspector and the evaluator often are not the same individual; therefore, the quality of the bridge evaluation depends on the quality of the communication between them. Review of inspection reports is addressed in § 237.113.

12. Scheduling Inspections

(a) A bridge management program should include a means to ensure that each bridge under the program is inspected at the frequency prescribed for that bridge by a competent engineer. Scheduling of bridge inspections is addressed in § 237.103.

(b) Bridge inspections should be scheduled from an accurate bridge inventory list that includes the due date of the next inspection.

13. Special Considerations for Railroad Bridges

Railroad bridges differ from other types of bridges in the types of loads they carry, in their modes of failure and indications of distress, and in their construction details and components. Proper inspection and analysis of railroad bridges require familiarity with the loads, details and indications of distress that are unique to this class of structure. Particular care should be taken that modifications to railroad bridges, including retrofits for protection against the effects of earthquakes, are suitable for the structure to which they are to be applied. Modifications should not adversely affect the serviceability of either the bridge or its accessibility for periodic or special inspection.

14. Railroad Implementation of Bridge Safety Programs

FRA recommends that each track owner or other entity which is responsible for the integrity of bridges which support its track should comply with the intent of this regulation by adopting and implementing an effective and comprehensive program to ensure the safety of its bridges. The bridge safety program should incorporate the following essential elements, applied according to the configuration of the railroad and its bridges. The basis of the program should be in one comprehensive and coherent document which is available to all railroad personnel and other persons who are responsible for the application of any portion of the program. The program should include:

(a) Clearly defined roles and responsibilities of all persons who are designated or authorized to make designations regarding the integrity of the track owner's bridges. The definitions may be made by position or by individual;

(b) Provisions for a complete inventory of bridges that carry the owner's track, to include the following information on each bridge:

(1) A unique identifier, such as milepost location and a subdivision code;

(2) The location of the bridge by nearest town or station, and geographic coordinates;

(3) The name of the geographic features crossed by the bridge;

(4) The number of tracks on the bridge;

(5) The number of spans in the bridge;

(6) The lengths of the spans; and

(7) Types of construction of:

(i) Substructure;

(ii) Superstructure; and

(iii) Deck;

(8) Overall length of the bridge;

(9) Dates of:

(i) Construction;

(ii) Major renovation; and

(iii) Strengthening; and

(10) Identification of entities responsible for maintenance of the bridge or its different components.

(c) Known capacity of its bridges as determined by rating by competent railroad bridge engineers or by design documents;

(d) Procedures for the control of movement of high, wide or heavy loads exceeding the nominal capacity of bridges;

(e) Instructions for the maintenance of permanent records of design, construction, modification, and repair;

(f) Railroad-specific procedures and standards for design and rating of bridges;

(g) Detailed bridge inspection policy, including:

(1) Inspector Qualifications; including
(i) Bridge experience or appropriate educational training;
(ii) Training on bridge inspection procedures; and
(iii) Training on Railroad Workplace Safety;
(2) Type and frequency of inspection; including
(i) Periodic (at least annually);
(ii) Underwater;
(iii) Special;
(iv) Seismic; and
(v) Cursory inspections of overhead bridges that are not the responsibility of the railroad;
(3) Inspection schedule for each bridge;
(4) Documentation of inspections; including
(i) Date;
(ii) Name of inspector;
(iii) Reporting Format; and
(iv) Coherence of information;
(5) Inspection Report Review Process;
(6) Record retention; and
(7) Tracking of critical deficiencies to resolution.
(h) Provide for the protection of train operations following an inspection, noting a critical deficiency, repair, modification or adverse event and should include:
(1) A listing of qualifications of personnel permitted to authorize train operations following an adverse event; and
(2) Detailed internal program audit procedures to ensure compliance with the provisions of the program.

Appendix B to Part 237—Schedule of Civil Penalties [Reserved]

Issued in Washington, DC, on August 7, 2009.

Joseph C. Szabo,

Federal Railroad Administrator.

[FR Doc. E9–19367 Filed 8–14–09; 8:45 am]

BILLING CODE 4910–06–P

Reader Aids

Federal Register

Vol. 74, No. 157

Monday, August 17, 2009

CUSTOMER SERVICE AND INFORMATION

Federal Register/Code of Federal Regulations	
General Information, indexes and other finding aids	**202–741–6000**
Laws	**741–6000**
Presidential Documents	
Executive orders and proclamations	**741–6000**
The United States Government Manual	**741–6000**
Other Services	
Electronic and on-line services (voice)	**741–6020**
Privacy Act Compilation	**741–6064**
Public Laws Update Service (numbers, dates, etc.)	**741–6043**
TTY for the deaf-and-hard-of-hearing	**741–6086**

ELECTRONIC RESEARCH

World Wide Web

Full text of the daily Federal Register, CFR and other publications is located at: **http://www.gpoaccess.gov/nara/index.html**

Federal Register information and research tools, including Public Inspection List, indexes, and links to GPO Access are located at: **http://www.archives.gov/federal_register**

E-mail

FEDREGTOC-L (Federal Register Table of Contents LISTSERV) is an open e-mail service that provides subscribers with a digital form of the Federal Register Table of Contents. The digital form of the Federal Register Table of Contents includes HTML and PDF links to the full text of each document.

To join or leave, go to **http://listserv.access.gpo.gov** and select *Online mailing list archives, FEDREGTOC-L, Join or leave the list (or change settings);* then follow the instructions.

PENS (Public Law Electronic Notification Service) is an e-mail service that notifies subscribers of recently enacted laws.

To subscribe, go to **http://listserv.gsa.gov/archives/publaws-l.html** and select *Join or leave the list (or change settings);* then follow the instructions.

FEDREGTOC-L and **PENS** are mailing lists only. We cannot respond to specific inquiries.

Reference questions. Send questions and comments about the Federal Register system to: **fedreg.info@nara.gov**

The Federal Register staff cannot interpret specific documents or regulations.

Reminders. Effective January 1, 2009, the Reminders, including Rules Going Into Effect and Comments Due Next Week, no longer appear in the Reader Aids section of the Federal Register. This information can be found online at **http://www.regulations.gov.**

CFR Checklist. Effective January 1, 2009, the CFR Checklist no longer appears in the Federal Register. This information can be found online at **http://bookstore.gpo.gov/.**

FEDERAL REGISTER PAGES AND DATE, AUGUST

38323–38502 3
38503–38884 4
38885–39210 5
39211–39534 6
39535–39870 7
39871–40056 10
40057–40470 11
40471–40718 12
40719–41032 13
41033–41326 14
41327–41580 17

CFR PARTS AFFECTED DURING AUGUST

At the end of each month, the Office of the Federal Register publishes separately a List of CFR Sections Affected (LSA), which lists parts and sections affected by documents published since the revision date of each title.

3 CFR

Administrative Orders:
Memorandums:
Memorandum of July 30, 2009 38885
Memorandum of August 5, 2009.....39871
Memorandum of August 6, 2009.....40055
Notices:
Notice of August 13, 2009 41325

4 CFR

202.....38503
Proposed Rules:
200.....38363
201.....38366

5 CFR

300.....40057
315.....40471
316.....40471

6 CFR

5.....38887

7 CFR

6.....41033
210.....38889
925.....38323
932.....38324
944.....38323
948.....38504
959.....38505
1205.....39211
Proposed Rules:
761.....39565
766.....39565
983.....39230
1493.....39240

9 CFR

145.....38326

10 CFR

26.....38326
50.....38890
72.....40060
Proposed Rules:
31.....38372
50 .....38987, 40006, 40765
52.....40006
110.....41096
609.....39569

11 CFR

111.....39535

12 CFR

226.....40477, 41194
308.....40478
363.....40478
619.....40060
620.....40060
621.....40060
1229.....38508
1282.....39873
1291.....38514
Proposed Rules:
914.....38559
985.....38564
989.....38564
1235.....38559
1273.....38564
1274.....38564
1282.....38572
1732.....38559

14 CFR

25 .....38328, 40479, 40482
39 .....38340, 38894, 38896, 38899, 38901, 38903, 38905, 38910, 38912, 40061, 40484, 41327
71 .....40065, 40066, 40067
95.....40488
97.....40719, 40721
135.....38522
Proposed Rules:
1.....41522
21.....39242
23.....41522
39 .....38381, 38988, 38991, 38993, 38995, 38999, 39243, 39582, 40525, 40527, 40529, 40776, 40778, 40781, 41096
71 .....39001, 39002, 39908, 40534, 40535

15 CFR

30.....38914
801.....41035
Proposed Rules:
742.....40117
774.....40117

16 CFR

317.....40686
1500.....39535
Proposed Rules:
425.....40121
1112.....40784

17 CFR

7.....39211
200.....40068
232.....38523
248.....40398
Proposed Rules:
190.....40794
275.....39840

18 CFR

385 41037

Proposed Rules:

410 41100

20 CFR

Proposed Rules:

618 39198

21 CFR

2 40069
312 ....40872, 40900
316 40900
510 38341
524 38341
558 40723
872 38686

22 CFR

123 ....38342, 39212
124 38342
126 38342
129 38342

25 CFR

26 41328
27 41328

26 CFR

1 38830
31 38830
602 38830

Proposed Rules:

301 39003

28 CFR

Proposed Rules:

58 41101

29 CFR

1910 40442
4022 41039

Proposed Rules:

471 38488
1910 40450

30 CFR

250 40069
251 40726

Proposed Rules:

926 ....40537, 40799

33 CFR

100 ....38524, 39213, 40731
147 38524
165 ....38524, 38530, 38916, 38918, 39216, 40734, 41040, 41043, 41045, 41334

Proposed Rules:

117 40802
165 ....39247, 39584

34 CFR

371 40495

Proposed Rules:

600 39498
602 39498

36 CFR

223 40736

37 CFR

201 39900
351 38532

38 CFR

Proposed Rules:

1 39589
4 39591

39 CFR

3020 ....38921, 40708, 40714, 41047, 41051, 41336

Proposed Rules:

111 38383
3020 38533
3050 39909

40 CFR

50 40074
51 40074
52 ....38536, 40083, 40745, 40747, 40750, 41340
55 40498
62 ....38344, 38346
141 38348
174 39540
180 ....38924, 38935, 38945, 38952, 38956, 38962, 38970, 39543, 39545, 40503, 40509, 40513, 40753
271 40518
300 ....40085, 41341

Proposed Rules:

52 ....39007, 39592, 40122, 40123, 40804, 40805, 41104, 41357
62 ....38384, 38385
63 39013
80 41359
96 39592
211 39150
271 40539
300 ....40123, 41361

41 CFR

102-36 41060

42 CFR

405 39384
412 39762
418 39384
483 40288

Proposed Rules:

409 ....39436, 40948
410 39032
411 39032
414 39032
415 39032
424 ....39436, 40948
484 ....39436, 40948
485 39032
489 ....39436, 40948

44 CFR

64 ....38358, 41056

Proposed Rules:

67 38386
206 40124

46 CFR

10 39218
11 39218

47 CFR

1 ....39219, 40089
63 39551
73 ....39228, 41059

Proposed Rules:

2 39249
73 ....38388, 38389, 39529, 39260, 39261, 40806, 41106
95 39249

48 CFR

Ch. 1 ....40458, 40468
4 40463
5 40459
7 40459
15 40463
22 ....40460, 40461
25 ....40461, 40463
28 40466
30 40467
32 40468
52 ....40460, 40461, 40463, 40466, 40467, 40468
501 41060
502 39563
519 41060
552 41060
3025 41346
3052 41346

Proposed Rules:

2 ....39262, 40131
4 ....39262, 40131
12 40131
15 39262
25 39597
39 40131
42 39262
45 39262
52 ....39262, 40131

49 CFR

89 40521
501 41067
571 40760
593 41068
599 38974

Proposed Rules:

213 41558
237 41558
544 41362

50 CFR

17 40132
20 40138
25 41351
32 41351
226 39903
300 38544
648 39229
679 ....38558, 38985, 40523, 41080
680 41092

Proposed Rules:

17 ....39268, 40540, 40650
20 ....39598, 41008
229 ....39910, 39914
218 40560
300 ....39032, 39269
600 39914
635 ....39032, 39914

LIST OF PUBLIC LAWS

This is a continuing list of public bills from the current session of Congress which have become Federal laws. It may be used in conjunction with "P L U S" (Public Laws Update Service) on 202–741–6043. This list is also available online at *http://www.archives.gov/federal-register/laws.html*.

The text of laws is not published in the **Federal Register** but may be ordered in "slip law" (individual pamphlet) form from the Superintendent of Documents, U.S. Government Printing Office, Washington, DC 20402 (phone, 202–512–1808). The text will also be made available on the Internet from GPO Access at *http://www.gpoaccess.gov/plaws/index.html*. Some laws may not yet be available.

H.R. 838/P.L. 111–48
Miami Dade College Land Conveyance Act (Aug. 12, 2009; 123 Stat. 1974)

S. 1107/P.L. 111–49
Judicial Survivors Protection Act of 2009 (Aug. 12, 2009; 123 Stat. 1976)

Last List August 11, 2009

Public Laws Electronic Notification Service (PENS)

PENS is a free electronic mail notification service of newly enacted public laws. To subscribe, go to *http://listserv.gsa.gov/archives/publaws-l.html*

Note: This service is strictly for E-mail notification of new laws. The text of laws is not available through this service. **PENS** cannot respond to specific inquiries sent to this address.