AUTHENTICATED
U.S. GOVERNMENT
INFORMATION
GPO

Federal Register

9–3–09 Thursday
Vol. 74 No. 170 Sept. 3, 2009

Pages 45535–45730

The **FEDERAL REGISTER** (ISSN 0097–6326) is published daily, Monday through Friday, except official holidays, by the Office of the Federal Register, National Archives and Records Administration, Washington, DC 20408, under the Federal Register Act (44 U.S.C. Ch. 15) and the regulations of the Administrative Committee of the Federal Register (1 CFR Ch. I). The Superintendent of Documents, U.S. Government Printing Office, Washington, DC 20402 is the exclusive distributor of the official edition. Periodicals postage is paid at Washington, DC.

The **FEDERAL REGISTER** provides a uniform system for making available to the public regulations and legal notices issued by Federal agencies. These include Presidential proclamations and Executive Orders, Federal agency documents having general applicability and legal effect, documents required to be published by act of Congress, and other Federal agency documents of public interest.

Documents are on file for public inspection in the Office of the Federal Register the day before they are published, unless the issuing agency requests earlier filing. For a list of documents currently on file for public inspection, see *www.federalregister.gov.*

The seal of the National Archives and Records Administration authenticates the Federal Register as the official serial publication established under the Federal Register Act. Under 44 U.S.C. 1507, the contents of the **Federal Register** shall be judicially noticed.

The **Federal Register** is published in paper and on 24x microfiche. It is also available online at no charge as one of the databases on GPO Access, a service of the U.S. Government Printing Office.

The online edition of the **Federal Register** *www.gpoaccess.gov/nara,* available through GPO Access, is issued under the authority of the Administrative Committee of the Federal Register as the official legal equivalent of the paper and microfiche editions (44 U.S.C. 4101 and 1 CFR 5.10). It is updated by 6 a.m. each day the **Federal Register** is published and includes both text and graphics from Volume 59, Number 1 (January 2, 1994) forward.

For more information about GPO Access, contact the GPO Access User Support Team, call toll free 1-888-293-6498; DC area 202-512-1530; fax at 202-512-1262; or via e-mail at *gpoaccess@gpo.gov.* The Support Team is available between 7:00 a.m. and 9:00 p.m. Eastern Time, Monday–Friday, except official holidays.

The annual subscription price for the **Federal Register** paper edition is $749 plus postage, or $808, plus postage, for a combined **Federal Register, Federal Register** Index and List of CFR Sections Affected (LSA) subscription; the microfiche edition of the **Federal Register** including the **Federal Register** Index and LSA is $165, plus postage. Six month subscriptions are available for one-half the annual rate. The prevailing postal rates will be applied to orders according to the delivery method requested. The price of a single copy of the daily **Federal Register,** including postage, is based on the number of pages: $11 for an issue containing less than 200 pages; $22 for an issue containing 200 to 400 pages; and $33 for an issue containing more than 400 pages. Single issues of the microfiche edition may be purchased for $3 per copy, including postage. Remit check or money order, made payable to the Superintendent of Documents, or charge to your GPO Deposit Account, VISA, MasterCard, American Express, or Discover. Mail to: U.S. Government Printing Office—New Orders, P.O. Box 979050, St. Louis, MO 63197-9000; or call toll free 1-866-512-1800, DC area 202-512-1800; or go to the U.S. Government Online Bookstore site, see *bookstore.gpo.gov.*

There are no restrictions on the republication of material appearing in the **Federal Register.**

How To Cite This Publication: Use the volume number and the page number. Example: 74 FR 12345.

Postmaster: Send address changes to the Superintendent of Documents, Federal Register, U.S. Government Printing Office, Washington, DC 20402, along with the entire mailing label from the last issue received.

SUBSCRIPTIONS AND COPIES

PUBLIC

Subscriptions:

Paper or fiche	**202–512–1800**
Assistance with public subscriptions	**202–512–1806**

General online information **202–512–1530; 1–888–293–6498**

Single copies/back copies:

Paper or fiche	**202–512–1800**
Assistance with public single copies	**1–866–512–1800 (Toll-Free)**

FEDERAL AGENCIES

Subscriptions:

Paper or fiche	**202–741–6005**
Assistance with Federal agency subscriptions	**202–741–6005**

FEDERAL REGISTER WORKSHOP

THE FEDERAL REGISTER: WHAT IT IS AND HOW TO USE IT

FOR: Any person who uses the Federal Register and Code of Federal Regulations.

WHO: Sponsored by the Office of the Federal Register.

WHAT: Free public briefings (approximately 3 hours) to present:

1. The regulatory process, with a focus on the Federal Register system and the public's role in the development of regulations.
2. The relationship between the Federal Register and Code of Federal Regulations.
3. The important elements of typical Federal Register documents.
4. An introduction to the finding aids of the FR/CFR system.

WHY: To provide the public with access to information necessary to research Federal agency regulations which directly affect them. There will be no discussion of specific agency regulations.

WHEN: Tuesday, September 15, 2009
9:00 a.m.–12:30 p.m.

WHERE: Office of the Federal Register
Conference Room, Suite 700
800 North Capitol Street, NW.
Washington, DC 20002

RESERVATIONS: (202) 741–6008

Printed on recycled paper.

Contents

Federal Register

Vol. 74, No. 170

Thursday, September 3, 2009

Agricultural Marketing Service
PROPOSED RULES
Hearing on Proposed Marketing Agreement No. 970:
Leafy Green Vegetables Handled in the United States, 45565–45574

Agriculture Department
See Agricultural Marketing Service
See Commodity Credit Corporation
See Farm Service Agency
See Federal Crop Insurance Corporation
See Rural Utilities Service

Centers for Disease Control and Prevention
NOTICES
Agency Information Collection Activities; Proposals, Submissions, and Approvals, 45640–45642
Meetings:
Board of Scientific Counselors, National Center for Health, 45642–45643
ICD–9–CM Coordination and Maintenance Committee, 45643
National Health and Nutrition Examination Survey DNA Samples:
Guidelines for Proposals to Use Samples and Cost Schedule, 45644–45648

Civil Rights Commission
NOTICES
Meetings; Sunshine Act, 45609

Coast Guard
RULES
Definition of Marine Debris, 45555–45560
NOTICES
Charter Renewals:
Cook Inlet Regional Citizen's Advisory Committee, 45648–45649

Commerce Department
See Foreign–Trade Zones Board
See International Trade Administration
See National Oceanic and Atmospheric Administration
NOTICES
Agency Information Collection Activities; Proposals, Submissions, and Approvals, 45609–45610

Commodity Credit Corporation
NOTICES
Environmental Impact Statements; Availability, etc.:
Conservation Reserve Program, 45606–45607

Consumer Product Safety Commission
PROPOSED RULES
Infant Bath Seats: Termination of Rulemaking, 45723–45724
Revocation of Regulation Banning Certain Baby-Walkers, Jumpers, and Similar Products, 45714–45719
Safety Standard for Infant Bath Seats, 45719–45723
Safety Standard for Infant Walkers, 45704–45714

Defense Department
PROPOSED RULES
Federal Acquisition Regulation:
FAR Case 2008–027, Federal Awardee Performance and Integrity Information System, 45579–45583

Education Department
NOTICES
Agency Information Collection Activities; Proposals, Submissions, and Approvals; Correction, 45622
Call for Nominations:
National Assessment Governing Board, 45622–45623

Employment and Training Administration
RULES
Labor Certification Process and Enforcement for Temporary Employment in Occupations, etc.; Correction, 45560–45561

Energy Department
See Federal Energy Regulatory Commission

Environmental Protection Agency
RULES
Approval and Promulgation of Air Quality Implementation Plans:
Louisiana; Emissions Inventory; Baton Rouge Ozone Nonattainment Area, 45561–45564
PROPOSED RULES
Approval and Promulgation of Air Quality Implementation Plans:
Louisiana; Emissions Inventory; Baton Rouge Ozone Nonattainment Area, 45578–45579
NOTICES
Clean Water Act Class II; Proposed Administrative Settlement, Penalty Assessment, etc:
HSBC USA Inc. and HSBC Finance Corp., 45637–45639

Executive Office of the President
See Presidential Documents

Farm Credit System Insurance Corporation
NOTICES
Meetings:
Farm Credit System Insurance Corporation Board, 45640

Farm Service Agency
NOTICES
Agency Information Collection Activities; Proposals, Submissions, and Approvals; Correction, 45606
Environmental Impact Statements; Availability, etc.:
Conservation Reserve Program, 45606–45607
Nominations Request:
Advisory Committee on Beginning Farmers and Ranchers, 45607–45608

Federal Aviation Administration
RULES
Airworthiness Directives:
Airbus Model A330–200 Series Airplanes, et al., 45550–45553
Establishment of Class E Airspace:
Oooguruk, AK, 45554–45555

Quinhagak, AK, 45553–45554
Special Conditions:
Boeing Model 737–600, et al., 45546–45550
PROPOSED RULES
Proposed Amendment of Class E Airspace; Mankato, MN, 45574–45575
Proposed Amendment of Class E Airspace; West Branch, MI, 45575–45576

Federal Crop Insurance Corporation
RULES
Catastrophic Risk Protection Endorsement; Group Risk Plan of Insurance Regulations, etc., 45537–45544

Federal Energy Regulatory Commission
PROPOSED RULES
Contract Reporting Requirements of Intrastate Natural Gas Companies:
Proposed Standardized Electronic Information Collection and Extending Time for Comments, 45576–45578
NOTICES
Applications:
ANR Pipeline Co., 45628–45629
Dahlberg Light and Power Co., 45625–45626
Florida Gas Transmission Co. LLC et al., 45626–45627
Georgia Power Co., 45625
Mackay Bar Corp., 45623–45624
Northwestern Wisconsin Electric Co., 45624–45625
Price Dam Partnership Ltd., 45627–45628
Combined Notice of Filings, 45629–45635
Environmental Impact Statements; Availability, etc.:
South Feather Water and Power Agency, 45635–45636
Filings:
CenterPoint Energy Gas Transmission Co., 45636
Milford Wind Corridor Phase I, LLC, 45636
Request Under Blanket Authorization:
Kinder Morgan Louisiana Pipeline LLC, 45636–45637

Federal Motor Carrier Safety Administration
PROPOSED RULES
Fees for the Unified Carrier Registration Plan and Agreement, 45583–45597
NOTICES
Qualification of Drivers; Exemption Renewals; Vision, 45670–45671

Fish and Wildlife Service
RULES
2008–2009 Refuge-Specific Hunting and Sport Fishing Regulations Modifications, 45674–45701
NOTICES
Endangered and Threatened Wildlife and Plants:
Apache Trout (Oncorhynchus apache) Recovery Plan; Second Revision, 45649–45650

Foreign–Trade Zones Board
NOTICES
Applications For Subzones:
Foreign–Trade Zone 170—Clark County, IN; Schwarz Pharma Manufacturing Ltd., etc., 45612–45613

General Services Administration
PROPOSED RULES
Federal Acquisition Regulation:
FAR Case 2008–027, Federal Awardee Performance and Integrity Information System, 45579–45583

Health and Human Services Department
See Centers for Disease Control and Prevention
See Substance Abuse and Mental Health Services Administration

Homeland Security Department
See Coast Guard
See U.S. Citizenship and Immigration Services

Interior Department
See Fish and Wildlife Service
See National Park Service

Internal Revenue Service
NOTICES
Agency Information Collection Activities; Proposals, Submissions, and Approvals, 45672

International Trade Administration
NOTICES
Antidumping:
Carbazole Violet Pigment 23 From India, 45610–45611
Certain Steel Concrete Reinforcing Bars from Turkey, 45611–45612

Labor Department
See Employment and Training Administration

Legal Services Corporation
NOTICES
Meetings; Sunshine Act, 45651–45652

National Aeronautics and Space Administration
PROPOSED RULES
Federal Acquisition Regulation:
FAR Case 2008–027, Federal Awardee Performance and Integrity Information System, 45579–45583
NOTICES
Agency Information Collection Activities; Proposals, Submissions, and Approvals, 45652
Meetings:
NASA Advisory Council; Science Committee; Heliophysics Subcommittee, 45652–45653

National Oceanic and Atmospheric Administration
RULES
Definition of Marine Debris, 45555–45560
Fisheries of the Exclusive Economic Zone Off Alaska:
Pollock in Statistical Area 610 in the Gulf of Alaska, 45564
PROPOSED RULES
Fisheries of the Northeastern United States:
Atlantic Mackerel, Squid, and Butterfish Fisheries (Amendment 10), 45597–45605
NOTICES
Taking and Importing Marine Mammals:
Operations of Liquified Natural Gas Port Facility in Massachusetts Bay, 45613–45622

National Park Service
NOTICES
National Register of Historic Places:
Notification of Pending Nominations and Related Actions, 45650–45651
Weekly Listing of Historic Properties, 45650

Nuclear Regulatory Commission
RULES
Administrative Changes, 45544–45546
NOTICES
Agency Information Collection Activities; Proposals, Submissions, and Approvals, 45653–45654

Draft Regulatory Guide, DG–1150; Issuance, Availability, 45654–45655
Draft Regulatory Guide, DG–1227; Availability, 45655–45656
Environmental Impact Statements; Availability, etc.:
Lost Creek ISR, LLC; Lost Creek In-Situ Recovery Project, 45656–45657
Revised Fuel Cycle Oversight Process; Availability, 45657–45660

Presidential Documents
PROCLAMATIONS
Special Observances:
National Alcohol and Drug Addiction Recovery Month (Proc. 8406), 45535–45536
National Ovarian Cancer Awareness Month (Proc. 8407), 45725–45728
National Prostate Cancer Awareness Month (Proc. 8408), 45729–45730

Rural Utilities Service
NOTICES
Publication of Depreciation Rates, 45608–45609

Securities and Exchange Commission
NOTICES
Applications for Deregistration Under Section 8(f) of the Investment Company Act (of 1940), 45660–45662
Joint Industry Plan:
Order Approving Amendments to Withdraw from the Intermarket Options Linkage Plan filed by Chicago Board Options Exchange, Inc., et al., 45662–45663
Self-Regulatory Organizations; Proposed Rule Changes:
International Securities Exchange LLC, 45663–45666
NASDAQ OMX PHLX Inc., 45666–45668

State Department
NOTICES
Culturally Significant Objects Imported for Exhibition Determinations:
Drawings by Rembrandt and His Pupils; Telling the Difference, 45669
Gifts from the Ancestors; Ancient Ivories of Bering Strait, 45669–45670
Mrs. Delany and Her Circle, 45669
Paul Gauguin; Paris, 1889, 45669
Playing with Pictures; the Art of Victorian Photocollage, 45668–45669
Sacred Spain; Art and Belief in the Spanish World, 45668

Substance Abuse and Mental Health Services Administration
NOTICES
Meetings:
Substance Abuse and Mental Health Services Administration National Advisory Council, 45642

Surface Transportation Board
NOTICES
Acquisition and Operation Exemption:
Energy Solutions, LLC, d.b.a. Heritage Railroad Corp.; Heritage Railroad Corp., 45670
Trackage Rights Exemption:
Indiana Rail Road Co.; CSX Transportation, Inc., 45671

Transportation Department
See Federal Aviation Administration
See Federal Motor Carrier Safety Administration
See Surface Transportation Board

Treasury Department
See Internal Revenue Service
NOTICES
Appointment of Members of the Legal Division to the Performance Review Board, Internal Revenue Service, 45672

U.S. Citizenship and Immigration Services
NOTICES
Agency Information Collection Activities; Proposals, Submissions, and Approvals, 45648

Separate Parts In This Issue

Part II
Interior Department, Fish and Wildlife Service, 45674–45701

Part III
Consumer Product Safety Commission, 45704–45724

Part IV
Presidential Documents, 45725–45730

Reader Aids

Consult the Reader Aids section at the end of this page for phone numbers, online resources, finding aids, reminders, and notice of recently enacted public laws.

To subscribe to the Federal Register Table of Contents LISTSERV electronic mailing list, go to http://listserv.access.gpo.gov and select Online mailing list archives, FEDREGTOC-L, Join or leave the list (or change settings); then follow the instructions.

CFR PARTS AFFECTED IN THIS ISSUE

A cumulative list of the parts affected this month can be found in the Reader Aids section at the end of this issue.

3 CFR

Proclamations:

8406 45535
8407 45727
8408 45729

7 CFR

402 45537
407 45537
457 45537

Proposed Rules:

970 45565

10 CFR

55 45544
76 45544

14 CFR

25 45546
39 45550
71 (2 documents) 45553, 45554

Proposed Rules:

71 (2 documents) 45574, 45575

15 CFR

909 45555

16 CFR

Proposed Rules:

1215 45719
1216 45704
1500 (2 documents) 45714, 45723

18 CFR

Proposed Rules:

284 45576

20 CFR

655 45560

33 CFR

151 45555

40 CFR

52 45561

Proposed Rules:

52 45578

48 CFR

Proposed Rules:

9 45579
12 45579
52 45579

49 CFR

Proposed Rules:

367 45583

50 CFR

32 45674
679 45564

Proposed Rules:

648 45597

Federal Register
Vol. 74, No. 170
Thursday, September 3, 2009

Presidential Documents

Title 3—

The President

Proclamation 8406 of August 31, 2009

National Alcohol and Drug Addiction Recovery Month, 2009

By the President of the United States of America

A Proclamation

Every year, Americans across the country overcome their struggles with addiction. With personal determination and the support of family and friends, community members, and health professionals, they have turned the page on an illness and sought the promise of recovery. On this occasion, we recognize these brave role models and express support for those in treatment, applaud those in recovery, and encourage those in need to seek help.

As a Nation, we must work together to provide access to effective services that reduce substance abuse and promote healthy living. Without effective treatment, abuse of alcohol, illicit drugs, or prescription medications can devastate the mind and body. With treatment, substance use disorders can be managed, giving individuals the effective tools necessary to address their addiction. This year's theme, ''Together We Learn, Together We Heal,'' calls us to unite and encourage drug-free living. Treatment programs, family members, and neighbors can all help assist those who experience addiction.

During National Alcohol and Drug Addiction Recovery Month, we also pay special tribute to the dedicated professionals and everyday citizens who, with skill and empathy, guide people through the treatment and recovery process. Across America, they are offering a message of hope and understanding. These compassionate individuals remind us that the strength of our character derives not from the mistakes we make, but from our ability to recognize and address them. When we extend a helping hand to those in need, we reaffirm the American spirit and move our Nation towards a brighter tomorrow.

NOW, THEREFORE, I, BARACK OBAMA, President of the United States of America, by the virtue of the authority invested in me by the Constitution and laws of the United States, do hereby proclaim September 2009 as National Alcohol and Drug Addiction Recovery Month. I call upon the people of the United States to observe this month with appropriate programs, ceremonies, and activities.

IN WITNESS WHEREOF, I have hereunto set my hand this thirty-first day of August, in the year of our Lord two thousand nine, and of the Independence of the United States of America the two hundred and thirty-fourth.

[FR Doc. E9–21371
Filed 9–2–09; 8:45 am]
Billing code 3195–W9–P

Rules and Regulations

Federal Register

Vol. 74, No. 170

Thursday, September 3, 2009

This section of the FEDERAL REGISTER contains regulatory documents having general applicability and legal effect, most of which are keyed to and codified in the Code of Federal Regulations, which is published under 50 titles pursuant to 44 U.S.C. 1510.

The Code of Federal Regulations is sold by the Superintendent of Documents. Prices of new books are listed in the first FEDERAL REGISTER issue of each week.

DEPARTMENT OF AGRICULTURE

Federal Crop Insurance Corporation

7 CFR Parts 402, 407, and 457

RIN 0563–AC19

Catastrophic Risk Protection Endorsement; Group Risk Plan of Insurance Regulations; and the Common Crop Insurance Regulations, Basic Provisions

AGENCY: Federal Crop Insurance Corporation, USDA.

ACTION: Final rule.

SUMMARY: The Federal Crop Insurance Corporation (FCIC) finalizes the Catastrophic Risk Protection Endorsement, the Group Risk Plan of Insurance Regulations, and the Common Crop Insurance Regulations, Basic Provisions to revise those provisions as mandated by the Food, Conservation, and Energy Act of 2008 (2008 Farm Bill). The changes will apply for the 2010 and succeeding crop years for all crops with a 2010 crop year contract change date on or after the effective date of this rule and for the 2011 and succeeding crop years for all crops with a 2010 crop year contract change date prior to the effective date of this rule.

DATES: *Effective Date:* This rule is effective October 5, 2009.

FOR FURTHER INFORMATION CONTACT: Erin Albright, Risk Management Specialist, Product Management, Product Administration and Standards Division, Risk Management Agency, United States Department of Agriculture, Beacon Facility—Mail Stop 0812, PO Box 419205, Kansas City, MO 64141–6205, telephone (816) 926–7730.

SUPPLEMENTARY INFORMATION:

Executive Order 12866

The Office of Management and Budget (OMB) has determined that this rule is non-significant for the purposes of Executive Order 12866 and, therefore, it has not been reviewed by OMB.

Paperwork Reduction Act of 1995

Pursuant to the provisions of the Paperwork Reduction Act of 1995 (44 U.S.C. chapter 35), the collections of information in this rule have been approved by OMB under control number 0563–0053 through March 31, 2012.

E-Government Act Compliance

FCIC is committed to complying with the E-Government Act of 2002, to promote the use of the Internet and other information technologies to provide increased opportunities for citizen access to Government information and services, and for other purposes.

Unfunded Mandates Reform Act of 1995

Title II of the Unfunded Mandates Reform Act of 1995 (UMRA) establishes requirements for Federal agencies to assess the effects of their regulatory actions on State, local, and tribal governments and the private sector. This rule contains no Federal mandates (under the regulatory provisions of title II of the UMRA) for State, local, and tribal governments or the private sector. Therefore, this rule is not subject to the requirements of sections 202 and 205 of UMRA.

Executive Order 13132

It has been determined under section 1(a) of Executive Order 13132, Federalism, that this rule does not have sufficient implications to warrant consultation with the States. The provisions contained in this rule will not have a substantial direct effect on States, or on the relationship between the national government and the States, or on the distribution of power and responsibilities among the various levels of government.

Regulatory Flexibility Act

FCIC certifies that this regulation will not have a significant economic impact on a substantial number of small entities. Program requirements for the Federal crop insurance program are the same for all producers regardless of the size of their farming operation. For instance, all producers are required to submit an application and acreage report to establish their insurance guarantees and compute premium amounts, and all producers are required to submit a notice of loss and production information to determine the amount of an indemnity payment in the event of an insured cause of crop loss. Whether a producer has 10 acres or 1,000 acres, there is no difference in the kind of information collected. To ensure crop insurance is available to small entities, the Federal Crop Insurance Act authorizes FCIC to waive collection of administrative fees from limited resource farmers. FCIC believes this waiver helps to ensure that small entities are given the same opportunities as large entities to manage their risks through the use of crop insurance. A Regulatory Flexibility Analysis has not been prepared since this regulation does not have an impact on small entities, and, therefore, this regulation is exempt from the provisions of the Regulatory Flexibility Act (5 U.S.C. 605).

Federal Assistance Program

This program is listed in the Catalog of Federal Domestic Assistance under No. 10.450.

Executive Order 12372

This program is not subject to the provisions of Executive Order 12372, which require intergovernmental consultation with State and local officials. See the Notice related to 7 CFR part 3015, subpart V, published at 48 FR 29115, June 24, 1983.

Executive Order 12988

This final rule has been reviewed in accordance with Executive Order 12988 on civil justice reform. The provisions of this rule will not have a retroactive effect. The provisions of this rule will preempt State and local laws to the extent such State and local laws are inconsistent herewith. With respect to any direct action taken by FCIC or to require the insurance provider to take specific action under the terms of the crop insurance policy, the administrative appeal provisions published at 7 CFR part 11 must be exhausted before any action against FCIC for judicial review may be brought.

Environmental Evaluation

This action is not expected to have a significant economic impact on the quality of the human environment, health, or safety. Therefore, neither an

Environmental Assessment nor an Environmental Impact Statement is needed.

Background

This rule finalizes changes to the Catastrophic Risk Protection Endorsement, the Group Risk Plan of Insurance Regulations, and the Common Crop Insurance Regulations, Basic Provisions, mandated by the 2008 Farm Bill, that were published by FCIC on November 24, 2008, as a notice of interim rulemaking in the **Federal Register** at 73 FR 70861–70865. The public was afforded 60 days to submit written comments and opinions.

A total of 52 comments were received from 14 commenters. The commenters were reinsured companies, conservation organizations, a state agricultural association, an insurance service organization, a grower association, a government agency, and other interested parties. The public comments received are organized below by the issues identified in this rule and the specific public comments received. The comments received and FCIC's responses are as follows:

General

Comment: A commenter asked how the changes in the interim rule will be conveyed to the insureds. The commenter asked whether the changes will be added to the Basic Provisions as an endorsement or whether the insurance providers will be required to issue a completely new set of Basic Provisions.

Response: The changes will be issued in a revised Farm Bill Amendment. Therefore, the insurance providers will only have to issue the revised endorsement rather than reissue the entire Basic Provisions.

Comment: A few commenters stated the language in this interim rule has already been sent, or is in the process of being sent, to all affected policyholders. If RMA makes any changes to what is in the interim rule, the commenters would recommend that any such changes to the Farm Bill Amendment necessitated by the final rule be issued in conjunction with the Administrative Remedies for Non-Compliance Final Rule language (7 CFR Part 400, 407, and 457; RIN 0563–AB73 published on December 18, 2008) instead of having another separate revised Farm Bill Amendment.

Response: FCIC has already issued the Administrative Remedies for Non-Compliance final rule language in the Sanctions Amendment. Therefore, any changes made in this final rule will result in the revision of the Farm Bill Amendment.

Comment: A few commenters stated the Supplementary Information for Executive Order 12866 in item number (3) indicates that this will not impact a large number of insured producers. There are a large number of current policyholders who have their own structures for farm-stored harvested production, and if a substantial percentage of these producers elect to extend the settlement of their claims, this could result in a large number of producers being impacted by this rule.

Response: The provisions only provide a producer the option to postpone settlement of their claim if they have farm-stored production. FCIC does not anticipate a large number of producers will elect this option. Further, the provisions only allow a short delay for calculating a claim and only when there is farm-stored production. Therefore, FCIC does not anticipate the changes within this provision will significantly impact a large number of producers.

Linkage Requirements

Comment: A few commenters stated FCIC has proposed removing all references to other United States Department of Agriculture (USDA) program benefits (linkage requirements). A commenter stated even though the question of eligibility is for other agencies to determine, their recommendation would be to maintain this language in the provisions so producers are aware of these requirements. A commenter stated while this makes sense since the question of eligibility and the requirements are dependent on those other programs as they become available, and such details should be provided by those other agencies, it would seem that there should be at least some mention of these potential requirements in the crop insurance policy language so policyholders are aware of them. Both commenters stated if FCIC chooses to continue with removing all language regarding linkage requirements from the policies, it would be beneficial if insurance providers were provided with some kind of notification when those linkage requirements are imposed or changed.

Response: Producers are generally aware of other USDA program benefits, so FCIC does not believe the addition of a general provision would be of any assistance to them. Further, these requirements have changed over the years. As stated in the interim rule, any program eligibility requirements for a particular program are best provided by the agency administering such program.

Delay of Claims for Farm-Stored Production

Comment: A few commenters stated section 12014 of the Farm Bill allows producers with farm-stored production to elect to extend the settlement of their claim for up to four additional months beyond the 60 days allowed in the current policy provisions. The commenters stated this language needs to clarify that it is applicable only to grain crops and also recommended the word ''harvested'' be inserted after the word ''Have'' and in front of the words ''farm-stored production'' to preclude any arguments from policyholders who maintain they are storing such production in the field (since there was not a definition of ''farm-stored production'' being added to the provisions).

Response: These provisions were intended to only apply to harvested farm-stored grain and FCIC has revised the provisions accordingly.

Comment: A few commenters stated the new farm-stored production provisions could potentially present some additional problems of extending the final determination of production for actual production history (APH) purposes beyond the applicable production reporting date. Policyholders may also feel this provides them with additional time to pay their premium beyond the termination date. There could also be APH reviews or other quality control reviews that are delayed beyond the April 30 deadline for reporting such information to the RMA because of this language. The additional time also allows for more things to happen to the grain before a final determination of production is made.

Response: FCIC is statutorily mandated to allow producers to delay their claims. However, FCIC does not anticipate many producers will opt to wait the full 180 days to determine the amount of farm-stored production. FCIC has added provisions notifying producers they will be assigned their prior year's approved yield in accordance with the temporary yield procedure contained in the Crop Insurance Handbook when extensions go beyond the date production reports are due. FCIC has also added provisions notifying producers that no additional time is provided for payment of premium nor can damage that occurs after grain is stored be covered. When quality control reviews cannot be completed before reports are due because production amounts are not yet

available, it should be noted in the report remarks that the review is not yet complete because of the delayed measurement.

Comment: A few commenters questioned what happens if the producer elects to delay measurement of the grain for an additional four months but subsequently removes and sells the grain during the four month period. The commenters asked whether the production from the settlement sheets with the buyer would be used in lieu of any measurements in this situation. The commenters also asked what happens if the grain is lost due to tornado or fire during this four month period. The added policy language does not address these issues.

Response: When production is sold, the sales records will be used to determine the amount of production provided the records are verifiable. Since harvest ends the insurance period, no coverage is provided for any subsequent damage. Provisions have been added to make this clear. When production is lost after the end of the insurance period and no records of production are available, no claim can be paid because there is no way to accurately adjust the claim.

Native Sod Acreage Located in the Prairie Pothole National Priority Area

Comment: A commenter stated placing the Farm Service Agency (FSA) in the position of determining if the soil has been tilled in the past, without an appeals process for the producer, is unacceptable. FSA records are available for only the last 30 to 40 years while the land has been operated for at least 100 years. With the current definition of native sod and no appeals rights, any grass area that does not have a farm number and a field number will be native sod. This goes far beyond the intent of the conference committee and the managers.

A few commenters stated there is acreage that was farmed over a decade ago and now appears to be native sod. This acreage was not farmed again until after May 22, 2008. Therefore, they believe this acreage will not be classified as native sod as defined in the Farm Bill Amendment. RMA must specify the acceptable documentation necessary to prove acreage last farmed over a decade ago is not native sod. This will allow the producer to avoid the 5-year moratorium on coverage if the Governor of a State enacts section 508(o) of the Federal Crop Insurance Act (Act). Because ''no record of being tilled'' is based on FSA records and FSA records exist for a limited number of years, as are the producer's records, the commenters asked if acreage that was previously farmed but for which no records exist to prove such farming, is returned to a ''native sod'' status by fact of ''no *record* of being tilled.'' If some documentation exists to prove old tillage, the commenters asked how the insurance providers will know if such documentation is considered acceptable (*e.g.*, Fish and Wildlife Refuge rental agreements). RMA must specify a list of documents or document criteria that is acceptable to prove prior tillage of a piece of ground that appears to be native sod but the land owner/producer claims is not. The commenter suggests RMA simply indicate that any available documentation, when outside the retention period, must contain an acceptable legal description (*e.g.*, 578's, CRP contracts).

Another commenter recommended the rule specify these records must consist of some type of official, written record tied to the specific piece of property under evaluation or consideration which indicates the property had been tilled at some point in the past; producers should not be allowed to self-certify any tillage records.

Another commenter stated FSA records are not infallible. The commenter recommended allowing a landowner to present the FSA with hard evidence that the land has been tilled and cropped in the past. If that evidence is persuasive, the FSA should be allowed to determine that the land had been previously tilled and is thus outside the operation of the rule and thus eligible for crop insurance.

A few commenters were concerned about the definition of native sod. The legislative definition of native sod differs from the definition in the regulation. The legislation defines native sod as land ''that has never been tilled for the production of an annual crop as of the date of enactment.'' The regulation defines native sod as land ''that has no record date of being tilled (determined in accordance with Farm Service Agency (FSA) records) as of the date of enactment.'' The definition in the regulation is significantly more restrictive. In most cases, FSA records are only available for the past 30 or 40 years while the land may have been in production as long as a century ago. It appears that the burden is on the grower to dispute the FSA records even though there is no appeals process available.

The commenters stated Congress did not limit the evidence or information a landowner could use to show that the land had been used for the production of an annual crop at some point in the past. Instead of relying on FSA records producers should be permitted to provide photos, personal records and affidavits as evidence that the land in question has been tilled in the past.

Response: FCIC agrees records other than those from FSA may be used to determine whether land has been tilled in the past. The provisions have been revised to allow the use of written verifiable records from other sources that are acceptable to the insurance provider. Since the kinds of records that could be used to verify prior tillage may vary considerably, FCIC does not intend to provide a specific list of documents, because doing so may eliminate the use of some acceptable records that would clearly indicate prior tillage. Acceptable records of tillage must be verifiable and identify the location of the acreage. Self-certification of past tillage is not acceptable. However, past farm records provided by a producer may be acceptable.

Comment: A commenter recommended considering the phrase ''tilled'' in its broadest meaning, which they believe agrees with the intent of Congress. That is, if land is converted to cropland using plowing, disking, chemicals like glyphosate, or other methods, the effect is the same and the conversion should fall under the ''native sod'' rules.

Another commenter wanted to ensure the term ''tilled'' is understood to broadly encapsulate the various means by which acreage may be prepared for an annual crop, including the understanding that the act of seeding an annual crop constitutes tilling. Acreage may be converted with many methods, including chemical treatment and no-till drilling, but the determinative factor is the acreage has no previous record of any means of conversion for an annual crop.

Response: Plowing, disking, no-till drilling following the termination of existing plants, and chemical tillage would all be considered tillage for the purpose of these provisions, provided it was done for the production of an annual crop. FCIC has added a definition to so specify.

Comment: A commenter stated it is not clear what constitutes native sod. The regulation merely transposes the legislative language—this is unacceptable. As there is with other conservation programs, there should be a specific list of criteria for what generally constitutes native sod (tall grass, mixed grasses and/or short prairie grasses), specific varieties of sod grasses covered by this provision, and how it will be identified and applied.

A commenter stated there should be an opt-out clause in periods of low or

projected low grain stocks, such as because of drought or increased grain demand.

The economic implications of this provision and the likelihood it could discourage much needed economic activity on the state level must be considered. There needs to be economic factors to allow a state to opt into or out of the program.

Response: There are no limitations on what factors a Governor may use to determine whether they will elect to implement the provisions. The choice is for the Governor to make. Further, the 2008 Farm Bill does not provide any authority that would allow an opt-out clause. Once the Governor makes the election, the only exception is for the five acre de minimis. FCIC does not believe specifying tall grass or short prairie grass, etc., provides any additional clarification. The term ''native grasses'' in the definition is clearly inclusive of these grass types. It is up to agricultural experts to determine what constitutes native grasses, grass-like plants, forbs, or shrubs suitable for grazing and browsing for a particular area. Therefore, no changes have been made in response to this comment.

Comment: A commenter stated the definition of ''native sod'' would allow brome grass or other grass-like plants to be declared native sod. The intent is to protect tall-, mixed-, and short-grass prairie. The definition should identify the grasses in those prairies such as big bluestem, Indian grass, green needle grass, blue gamma grass, buffalo grass, little blue stem, etc. A specific list of criteria must be developed for native sod including grass types, soils, and erosion factors before this program is put into effect.

Another commenter stated it is clear the definition specifies native grasses but also specifies other plants (grass-like, or forbs, or shrubs) all of which are suitable for grazing and browsing. They emphasized this for the fact the ''native'' designation of existing grasses is just one of multiple possible plants that meet the definition. In using ''or'' the definition emphasizes, in effect, the native or non-native status of the plants present is not the compelling criteria. Rather, it is the broadly referenced native grass, grass-like plants, forbs, or shrubs which are of a type suitable for grazing and browsing.

Secondly, and of ultimately higher determinative value, the definition requires the suitable plants are present on ''land'' (section 12020 of the 2008 Farm Bill) or ''acreage'' (interim rule) that has never been tilled for the production of an annual crop. The commenter emphasized this second criteria is of higher determinative value because the broad definition of suitable plants ultimately depends upon the plants simply being suitable for grazing and browsing. Additionally, as determined by the ''and'' in the interim rules definition which reads ''* * * and that has no record of being tilled * * *,'' the prevailing factor is that the acreage (''determined in accordance with FSA records'') has not previously been in annual crop production.

The commenter emphasized these points to clarify appropriate establishment and subsequent adherence to the rule should never be dependent on the native status or specific species of grass or plants. Beyond simply consisting of various plants being suitable for grazing and browsing, the final determining factor is that the acreage has not previously been converted for an annual crop.

Another commenter recommended reordering the definition of native sod to read as follows: ''Acreages on which no records exist indicating tillage (determined in accordance with FSA records) for the production of an annual crop on or before May 22, 2008, and the plant cover is composed principally of grasses, grass-like plants, forbs, or shrubs suitable for grazing and browsing.''

While the interim rule does not suggest there is a priority in the criteria, the commenter believed the lack of tillage history is a more important indicator of native sod than the plant community description provided. Native sod may also contain nonnative species that have invaded from adjacent habitat and may encounter changes in vegetation composition associated with natural succession and wildfire. Furthermore, the vegetation composition may be difficult to discern by FCIC or FSA staff who are not trained botanists or biologists because plant communities may also vary depending on intensity and frequency of drought, fire and grazing. For these reasons, the commenter recommended the word ''native'' be stricken from the definition. They believe that doing so, in combination with the suggested reorganization of the definition, will facilitate implementation of the rule and fulfill Congressional intent.

Another commenter stated under the law, the definition of ''Native Sod'' includes land ''* * * on which the plant cover is composed principally of native grasses, grasslike plants, forbs, or shrubs suitable for grazing and browsing * * *'' Given the clear Congressional intent of the language, USDA need not consider arguments about which plants should be included as ''native grasses, grasslike plants'' etc. The real test is whether the producer is converting land to cropland that has not been converted before, and upon which there is therefore no prior crop insurance history. USDA properly relied on statutory language in defining ''Native Sod.'' The commenter would oppose USDA adopting a substantially different definition of Native Sod. One practice USDA should be wary of is a landowner drilling non-native plant species into a native prairie, and then claiming what they are breaking is not 'native sod' and thus outside the operation of the rule. The status of the land as of May 22, 2008, should determine program eligibility under this provision.

Response: The primary consideration is whether the acreage has been tilled in the past and FCIC has reordered the definition accordingly. The term ''native'' cannot be removed from the definition because it is specified in the 2008 Farm Bill. Acreage that has never been tilled is very likely to contain the broad categories of plant types listed in the definition. The intent is to protect acreage with native plants that has never been tilled. Acreage that has been tilled and planted with non-native species, such as Smooth Brome Grass, would not be included under the definition of ''native sod.'' The native sod provisions are applicable in a wide geographic area and FCIC cannot list all the native plants that may be found in these areas. In questionable cases, agricultural experts in the area may be consulted to determine the native plants for a specific area. FCIC has added a definition of ''tilled'' to make it clear that simply drilling non-native plant species into native sod without terminating the native plants would not be considered tilling. Whether there is a prior crop insurance history is not material. The paramount question is whether the acreage has previously been tilled.

Comment: Several comments were received regarding the Governor's authority to determine whether section 508(o) of the Act will be effective in their State. A commenter stated RMA must impose a specific deadline that limits the amount of time the Governor has to make this election. If RMA does not establish a deadline to limit the decision-making window, there is the potential a producer may suffer unwarranted penalties. A fixed number of days following the applicable acreage reporting date is acceptable. In addition, RMA must clarify what crop year this will apply to if the election is imposed after said deadline. (*i.e.,* if section 508(o) of the Act becomes effective more than

60 days past the applicable acreage reporting deadline specified in the Special Provisions for the crop year, the election will be effective for the following crop year and succeeding crop years).

A few commenters stated as the rule notes, the Governor of each of the five states has the sole authority to determine whether the provision will be operative in his or her state. The commenters appreciated and supported USDA's suggestion that the Governors make their designation by February 15, 2009, to put everyone on notice and allow crop insurance to be purchased where available. The commenters also recognized this as a helpful suggestion with practical advantages for avoiding the complexities of required benefit repayments and premium refunds in the first crop year in which the election may be made. However, the statute does not set a deadline for Governors to make this determination.

A few commenters questioned whether the Governor's election to participate or not participate in the provision is a one-time permanent election or if there is some other time period during which the election applies. The rule should clarify whether the Governors can elect to participate at any time in the future or can change their decision at a later time. A commenter questioned if the Governor of a respective state can change their election, does the election start at the date of the election, is the election for one year, or is it a permanent decision. If the election can be changed, the commenter asked whether FCIC would be obligated to ''look-back'' to the May 22, 2008 enactment date of the Farm Bill. A few commenters stated it is not clear whether a future Governor can change the election made by a predecessor.

A few commenters recommended the decisions made by the Governor during the 2009 crop year should be final, and language should be inserted into the provisions to clarify the finality of these decisions. The commenters also recommended any decision made by the Governor should be maintained for the duration of the 2008 Farm Bill regardless of whether the Governor who made the decision remains in office during this period. The commenters believed that would ensure consistency for the duration of the 2008 Farm Bill, in fairness to farmers within the affected region who might otherwise be impacted by fines or insurance repayment should a decision be changed after 2009. Another commenter stated section 12020 of the 2008 Farm Bill and the interim rule clearly do not and should not place any limit upon when a current or future Governor within the Prairie Pothole National Priority Area may elect to make section 508(o) of the Act effective, and section 12020 of the 2008 Farm Bill and the interim rule clearly do not and should not enable a current or future Governor to nullify section 508(o) of the Act if an election has been made previously. However, with respect to the complexities of future required benefit repayments and premium refunds on any acreage in the first five years after section 508(o) of the Act is made effective—on native sod acreage converted anytime after May 22, 2008—the commenter recommended that future elections should become effective only prior to February 15 of a given year. Or stated alternatively, elections made after February 15 will become effective for the next crop year.

A few commenters stated it is not clear what constitutes application of a Governor's approval and how the FCIC will notify individual farmers of the election (*e.g.,* a phone call, a document transmitted in writing or by electronic e-mail). To avoid any confusion, it would seem prudent for the FCIC to require a Governor's election in writing. Also, an application should only apply from the date of a Governor's approval. The commenter opposed retroactive ''look-backs'' of any indemnities or other payments.

A few commenters had concerns growers will be subject to retroactive penalty as a result of indemnities or disaster assistance payments in the event a Governor decides to enroll in the program at some future date. A producer should only forfeit indemnities and disaster payments that would be received after a Governor elects to make section 508(o) of the Act effective in the state since prior to that time the statute is not applicable. Similarly, the interim rule does not explain whether a Governor has the authority later to withdraw their state from the program once the decision has been made to enroll.

Response: The 2008 Farm Bill does not contain any deadlines for the Governors to decide whether to implement section 508(o) of the Act. Therefore, FCIC lacks the authority to impose a deadline. However, in correspondence to the Governors and in the interim rule, FCIC explained the potential negative impacts of a delayed decision. Any time a Governor makes the election, the provision becomes effective for any acreage newly tilled after May 22, 2008, and insurance is not available for the first five years of planting. Producers who received an indemnity for acreage tilled after this date will be required to repay it and any premiums paid must be refunded. If the election could be changed, it would effectively negate the provision. If a Governor elects to implement section 508(o) of the Act, it will be announced by RMA via a Manager's Bulletin and posted on the RMA Web site at *http://www.rma.usda.gov/.* Insurance providers will be directed to notify individual producers when such announcement is made.

Comment: Several commenters stated the interim rule specifies the counties in the Prairie Pothole National Priority Area by referencing the RMA Web site. The commenters recommended the rule identify the specific counties within the States of Iowa, Minnesota, Montana, North Dakota, and South Dakota that are included in the RMA Web site map of the Prairie Pothole National Priority Area to make it clearer, and to avoid inadvertently changing the operation of the rule should the Web site be changed, updated, or become temporarily unavailable. The Web site map should be cited as a reference tool.

Response: The counties identified on the RMA Web site are consistent with the counties identified by the FSA, Agricultural Resource Conservation Program 2–CRP (Revision 4) dated April 28, 2008. The Web site would only be changed or updated if the designated counties change. However, FCIC will include the FSA reference in case the Web site is unavailable.

Comment: A few comments were received regarding how the native sod provisions are only applicable in the Prairie Pothole National Priority Area. A commenter questioned why the area in the Prairie Pothole National Priority Area is of more concern than other areas in the state. The arbitrary decision makes it impossible to explain to producers that native sod in the Prairie Pothole National Priority Area is a higher priority than native sod in other parts of the state. A commenter believed the native sod provisions of the 2008 Farm Bill resulted from a clear problem that applies well beyond the Prairie Pothole National Priority Area. Throughout the Great Plains, and in other parts of the country, native prairie, virgin forest, and other types of native habitat are being tilled, cleared and converted to cropland. Much of this land is marginal and would not be farmed if the risk in doing so were not underwritten by taxpayer-subsidized crop insurance and disaster assistance programs, along with commodity payments and other USDA programs.

The commenter stated in sagebrush grasslands, the rapid pace of conversion

represents a long-term threat to the health and viability of sage-grouse populations and other sagebrush obligate species. Portions of the Prairie Pothole National Priority Area within Montana include important sage-grouse habitat as well as native grasslands important to migratory birds of concern. Unfortunately, the current focus on the Prairie Pothole National Priority Area excludes significant blocks of native grasslands within the Great Plains in Montana and other states. Putting the native sod provisions in effect in the Prairie Pothole National Priority Area would be a good first step, but the job is nowhere near complete if we seek to maintain functional working landscapes throughout our nation.

The commenter urged USDA to examine this issue carefully, and to undertake monitoring and research on how much native prairie and other native habitat is being converted to cropland and the influence of USDA insurance, commodity, and other programs in those decisions. Should one or more Governors choose to have the provision apply in their state, it would provide an invaluable opportunity to study side-by-side comparisons of conversion rates with and without the availability of Federal crop insurance.

Another commenter stated USDA data shows the loss of rangeland and pastureland is not limited to the states of the Prairie Pothole National Priority Area. In fact, data cited in a Government Accountability Office (GAO) report shows states like Colorado, New Mexico and Texas are experiencing losses as bad as or worse than those in the Prairie Pothole National Priority Area. Landowners throughout the country who are maintaining grasslands receive none of the Federal farm program supports that studies show are an important factor in converting grasslands to annual crop production. Again, the GAO detailed that even among annual crop producers, the landowners that are converting the most native sod are receiving far larger insurance benefits than their neighbors who are not. Further, the Federal farm program is paying landowners to re-establish perennial grass and plants on previously converted sod at the very same time crop insurance and other Federal benefits are prodding the conversion of perennial grasslands.

The commenter recommended the ''added land'' provision of crop insurance rules be amended to require land without production crop history prior to May 22, 2008, that is subsequently planted to a crop, must establish a full four to ten year actual production history prior to becoming eligible for insurance.

A commenter strongly recommended an incentive-based program to help preserve tall-, mixed-, and short-grass prairies in the entire state of South Dakota, as opposed to the current sod saver program for the Prairie Pothole National Priority Area.

Another commenter noted in their explanatory language on the new Farm Bill, the Managers Report cites a GAO report and recommendation that USDA should ''(1) track annual conversion and provide current data to policymakers, and (2) conduct a study of the relationship between farm program payments and land conversion and report findings to Congress * * * The Managers intend for the Secretary to undertake a study on the influence of the crop insurance program on the conversion of native sod to crop production * * *'' and to provide recommendations to Congress.

The commenter echoed this call for careful study and recommendations. They also asked USDA to look for other opportunities within the existing structure of Federal crop insurance and non-insured disaster assistance payments to reduce or eliminate the taxpayer-paid incentives that are now in place that encourage landowners to break out native prairie and other native habitats, and to work to combat abuses of the current system that waste taxpayer money.

Response: Congress created an exception to the rule regarding the eligibility of acreage for insurance. Because it is an exception to the rule, it should not be read more broadly than it is written. The 2008 Farm Bill specifically provided the authority to implement these provisions in the Prairie Pothole National Priority Area. The 2008 Farm Bill also specified the 5-year period in which insurance cannot be offered after native sod acreage has been tilled. In addition, the crop insurance policy already contains provisions that limit insurance on certain acreage on which a crop was not previously planted or harvested in the previous three years. As conversion data is gathered and included in required reports to policymakers, policy changes may be vetted to determine the best land management practices that meet the needs of all land users.

Comment: A commenter stated the interim rule makes native sod tilled after May 22, 2008, ineligible for crop insurance for the first five years an annual crop is planted. It appears this will also make the crop ineligible for any disaster payments because crop insurance is a requirement for disaster assistance. This reduces a risk management tool for the producer in the Prairie Pothole National Priority Area. The commenters asked for the justification for eliminating these tools for the producer in the Prairie Pothole National Priority Area and not for the producer across the road in another county that is not in the Prairie Pothole National Priority Area. The commenter recommended an incentive to not break the native sod with a pilot program or a CREP-like program of some sort. Producers who have gone out of the livestock business are limited in the use of the land under Sod Saver. The producer should make decisions based on his or her operation needs, not disincentives for change because he or she lives in the Prairie Pothole National Priority Area.

Another commenter stated if a producer falls under the sod saver provisions in the interim rule, they are not eligible for disaster assistance. This would place these farmers at an economic disadvantage relative to other farmers. The commenter was opposed to that outcome.

Response: FCIC is required to implement the provisions of the 2008 Farm Bill. Further, its provisions limit crop insurance and noninsured crop disaster assistance program benefits. It does not expressly exclude the payment of disaster benefits. FSA provides disaster assistance and any program requirements for insurance are detailed in materials developed and issued by FSA. Producers should contact their local FSA office to verify disaster assistance program requirements.

Comment: A commenter stated the interim rule adds a new subsection in section 3 of 7 CFR 407.9 and a new subsection in section 9 of 7 CFR 457.8 to specify when native sod is ineligible for crop insurance. The language is virtually identical in the two sections and is consistent with section 12020 of the 2008 Farm Bill, except in the final sentence of the sections: ''If the Governor makes this election after you have received an indemnity or other payment for native sod acreage, you may be required to repay the amount received and any premium for such acreage may be refunded to you.''

Section 12020 of the 2008 Farm Bill states that, ''* * * native sod acreage that has been tilled for the production of an annual crop after the date of enactment of this subsection shall be ineligible during the first 5 crop years of planting * * *''

Both section 12020 of the 2008 Farm Bill and the interim rule affirm acreage tilled for production after May 22, 2008 is not insurable, so the commenter

believed it will be necessary to specify that a payment received shall be repaid and a premium paid shall be refunded.

Further to this point, paragraph d. of the ''Background'' section of the interim rule contains the same usage of ''may'' that the commenter asserts should be ''shall.'' As stated in paragraph d. in adherence to section 12020 of the 2008 Farm Bill, ''The 2008 Farm Bill is specific in that, at the election of the Governors of these states, any acreage of native sod that is tilled for production of an annual crop after the date of enactment will be ineligible for insurance for the first 5 crops years of planting.'' The commenter agreed the 2008 Farm Bill is specific and that the ineligibility shall apply whenever a Governor elects to make section 508(o) of the Act effective.

Response: The commenter is correct that if the election is made by the Governor, acreage first tilled after May 22, 2008, is ineligible for insurance so the provisions should indicate prior payments will have to be repaid. FCIC has revised the provisions accordingly.

Comment: A commenter stated the statutory language says ''The Secretary shall exempt areas of 5 acres or less'' from the clause, which is designed to provide a 'de minimum' exemption. The commenter believed the rule's language is clear that ''any native sod acreage greater than 5 acres'' is not insurable. The commenter recommended the Secretary, in providing direction to USDA employees, ensures landowners do not skirt the rule by trying to claim an exemption for five acres of an area one year, five more acres the following year, another five acres the third year, etc.

Another commenter stated section 12020 of the 2008 Farm Bill specifies a ''*De Minimis Acreage Exemption''* that requires areas of 5 acres or less to be exempt from the ineligibility designation. The commenter wanted to emphasize it would contradict the intent and spirit of the law to allow incremental conversion of contiguous parcels of 5 acres or less. They emphasized this point to clarify appropriate establishment and subsequent adherence to the rule must ensure multiple tracts of 5 acres or less that become contiguous tracts totaling more than 5 acres should be regarded as a single tract larger than 5 acres and therefore ineligible for crop insurance.

Response: The intent is to provide an exception for acreage that is legitimately five acres or less. The intent is not to allow incremental increases in the amount of converted acreage. FCIC has added provisions specifying that adding to the acreage so more than 5 acres have been converted would subject all the converted acreage to the provisions beginning the year the producer cumulatively converted more than the 5 acre threshold.

Comment: A commenter stated they live in a wildlife paradise in Central North Dakota adjacent to U.S. Fish & Wildlife land and the wildlife is every bit as plentiful and cared for on their land as on the government-owned land. They have watched all of these projects and land acquisitions over the years and the amount of tax-payer money that has been spent could surely help eliminate the deficit. The commenter asked USDA to use its influence to deter another costly program.

Response: Since the program changes contained in this rule were mandated by the 2008 Farm Bill, FCIC is required by law to implement the changes.

List of Subjects in 7 CFR Parts 402, 407 and 457

Crop insurance, Reporting and recordkeeping requirements.

Final Rule

■ Accordingly, as set forth in the preamble and under the authority of 7 U.S.C. 1506(l), 1506(o), the interim rule amending 7 CFR parts 402, 407 and 457 which was published at 73 FR 70861–70865 on November 24, 2008, is adopted as final with the following changes. The amendments listed below are effective for the 2010 and succeeding crop years for all crops with a 2010 crop year contract change date on or after the effective date of this rule and for the 2011 and succeeding crop years for all crops with a 2010 crop year contract change date prior to the effective date of this rule as follows:

PART 407—GROUP RISK PLAN OF INSURANCE REGULATIONS

■ 1. The authority citation for 7 CFR Part 407 continues to read as follows:

Authority: 7 U.S.C. 1506(l), 1506(o).

■ 2. Amend § 407.9 as follows:

■ a. Amend section 1 by adding the definition of ''tilled'' and revising the definitions of ''native sod'' and ''Prairie Pothole National Priority Area;'' '' and

■ b. Amend section 3 by revising paragraph (d).

The revised and added text reads as follows:

§ 407.9 Group risk plan common policy.

* * * * *

1. Definitions.

* * * * *

Native sod. Acreage that has no record of being tilled (determined in accordance with FSA or other verifiable records acceptable to us) for the production of an annual crop on or before May 22, 2008, and on which the plant cover is composed principally of native grasses, grass-like plants, forbs, or shrubs suitable for grazing and browsing.

* * * * *

Prairie Pothole National Priority Area. Consists of specific counties within the States of Iowa, Minnesota, Montana, North Dakota or South Dakota as specified on the RMA Web site at *http://www.rma.usda.gov/*, or a successor Web site, or the Farm Service Agency, Agricultural Resource Conservation Program 2–CRP (Revision 4), dated April 28, 2008, or a subsequent publication.

* * * * *

Tilled. The termination of existing plants by plowing, disking, burning, application of chemicals, or by other means to prepare acreage for the production of an annual crop.

* * * * *

3. Insured and Insurable Acreage.

* * * * *

(d) If the Governor of a State designated within the Prairie Pothole National Priority Area elects to make section 508(o) of the Act effective for the State, any native sod acreage greater than five acres located in a county contained within the Prairie Pothole National Priority Area that has been tilled after May 22, 2008, is not insurable for the first five crop years of planting following the date the native sod acreage is tilled.

(1) If the Governor makes this election after you have received an indemnity or other payment for native sod acreage, you will be required to repay the amount received and any premium for such acreage will be refunded to you.

(2) If we determine you have tilled less than five acres of native sod a year for more than one crop year, we will add all the native sod acreage tilled after May 22, 2008, and all such acreage will be ineligible for insurance for the first five crop years of planting following the date the cumulative native sod acreage tilled exceeds five acres.

* * * * *

PART 457—COMMON CROP INSURANCE REGULATIONS

■ 3. The authority citation for 7 CFR part 457 continues to read as follows:

Authority: 7 U.S.C. 1506(1), 1506(o).

■ 4. Amend § 457.8 as follows:

■ a. Amend section 1 by adding the definition of ''tilled'' and revising the

definitions of ''native sod'' and ''Prairie Pothole National Priority Area;''

■ b. Amend section 9 by revising paragraph (e); and

■ c. Revise section 14(c) (Your Duties).

The revised and added text reads as follows:

§ 457.8 The application and policy.

1. Definitions.

* * * * *

Native sod. Acreage that has no record of being tilled (determined in accordance with FSA or other verifiable records acceptable to us) for the production of an annual crop on or before May 22, 2008, and on which the plant cover is composed principally of native grasses, grass-like plants, forbs, or shrubs suitable for grazing and browsing.

* * * * *

Prairie Pothole National Priority Area. Consists of specific counties within the States of Iowa, Minnesota, Montana, North Dakota or South Dakota as specified on the RMA Web site at *http://www.rma.usda.gov/*, or a successor Web site, or the Farm Service Agency, Agricultural Resource Conservation Program 2–CRP (Revision 4), dated April 28, 2008, or a subsequent publication.

* * * * *

Tilled. The termination of existing plants by plowing, disking, burning, application of chemicals, or by other means to prepare acreage for the production of an annual crop.

* * * * *

9. Insurable Acreage.

* * * * *

(e) Notwithstanding the provisions in section 9(a)(1), if the Governor of a State designated within the Prairie Pothole National Priority Area elects to make section 508(o) of the Act effective for the State, any native sod acreage greater than five acres located in a county contained within the Prairie Pothole National Priority Area that has been tilled after May 22, 2008, is not insurable for the first five crop years of planting following the date the native sod acreage is tilled.

(1) If the Governor makes this election after you have received an indemnity or other payment for native sod acreage, you will be required to repay the amount received and any premium for such acreage will be refunded to you.

(2) If we determine you have tilled less than five acres of native sod a year for more than one crop year, we will add all the native sod acreage tilled after May 22, 2008, and all such acreage will be ineligible for insurance for the first five crop years of planting following the date the cumulative native sod acreage tilled exceeds five acres.

* * * * *

14. Duties in the Event of Damage, Loss, Abandonment, Destruction, or Alternative Use of Crop or Acreage.

Your Duties—

* * * * *

(c) In addition to complying with the notice requirements, you must submit a claim for indemnity declaring the amount of your loss:

(1) Not later than 60 days after the end of the insurance period unless, prior to the end of the 60 day period, you:

(i) Request an extension in writing and we agree to such request (Extensions will only be granted if the amount of loss cannot be determined within such time period because the information needed to determine the amount of the loss is not available); or

(ii) Have harvested farm-stored grain production and elect, in writing, to delay measurement of your farm-stored production and settlement of any potential associated claim for indemnity (Extensions will be granted for this purpose up to 180 days after the end of the insurance period).

(A) For policies that require APH, if such extension continues beyond the date you are required to submit your production report, you will be assigned the previous year's approved yield as a temporary yield in accordance with applicable procedures.

(B) Any extension does not extend any date specified in the policy by which premiums, administrative fees, or other debts owed must be paid.

(C) Damage that occurs after the end of the insurance period (for example, while the harvested crop production is in storage) is not covered; and

(2) That includes all information we require to settle the claim. Failure to submit a claim or provide the required information will result in no indemnity, prevented planting payment or replant payment (even though no indemnity or other payment is due, you will still be required to pay the premium due under the policy for the unit).

* * * * *

Signed in Washington, DC, on August 28, 2009.

William J. Murphy,

Manager, Federal Crop Insurance Corporation.

[FR Doc. E9–21233 Filed 9–2–09; 8:45 am]

BILLING CODE 3410–08–P

NUCLEAR REGULATORY COMMISSION

10 CFR Parts 55 and 76

RIN 3150–AI69

[NRC–2009–0242]

Administrative Changes

AGENCY: Nuclear Regulatory Commission (NRC).

ACTION: Final rule.

SUMMARY: The U.S. Nuclear Regulatory Commission (NRC) is making administrative changes to its regulations to correct errors published in recent rulemaking documents. This final rule clarifies the term ''Under the Influence'' and corrects erroneous citations and typographical errors. This document is necessary to inform the public of these changes.

DATES: Effective date is October 5, 2009.

FOR FURTHER INFORMATION CONTACT: Lynn Hall, Office of Nuclear Reactor Regulation, U.S. Nuclear Regulatory Commission, telephone 301–415–3759, e-mail *Lynn.Hall@nrc.gov.*

ADDRESSES: You can access publicly available documents related to this document using the following methods:

Federal e-Rulemaking Portal: Go to *http://www.regulations.gov* and search for documents filed under Docket ID [NRC–2009–0242]. Address questions about NRC dockets to Carol Gallagher 301–492–3668; e-mail *Carol.Gallagher@nrc.gov.*

NRC's Public Document Room (PDR): The public may examine and have copied for a fee publicly available documents at the NRC's PDR, Public File Area O1 F21, One White Flint North, 11555 Rockville Pike, Rockville, Maryland.

NRC's Agencywide Documents Access and Management System (ADAMS): Publicly available documents created or received at the NRC are available electronically at the NRC's electronic Reading Room at *http://www.nrc.gov/reading-rm/adams.html.* From this page, the public can gain entry into ADAMS, which provides text and image files of NRC's public documents. If you do not have access to ADAMS or if there are problems in accessing the documents located in ADAMS, contact the NRC's PDR reference staff at 1–899–397–4209, 301–415–4737, or by e-mail to *pdr.resource@nrc.gov.*

SUPPLEMENTARY INFORMATION:

Background

On March 31, 2008, (73 FR 16965), the NRC published a final rule

amending its Fitness-for-Duty programs to update the fitness-for-duty requirements and enhance consistency with advances in other relevant Federal rules and guidelines including the U.S. Department of Health and Human Services Mandatory Guidelines for Federal Workplace Drug Testing Programs, and other Federal drug and alcohol testing programs that impose similar requirements on the private sector. The March 2008 rule amended portions of former § 26.2 and moved them into new § 26.4. This final rule corrects a cross-reference to § 26.2(a)(1) through (5), as stated in § 76.60(f), to read § 26.4(d)(1) through (5).

Furthermore, this document clarifies the term ''Under the Influence,'' as stated in § 55.53(j), by stating that the licensee exceeded, as evidenced by a confirmed test result, the lower of the cutoff levels of drugs or alcohol contained in 10 CFR Part 26. The reference to appendix A of Part 26 has been removed from § 55.53(f) because the March 2008, Final rule eliminated appendix A from Part 26.

Rulemaking Procedure

Because this amendment constitutes a minor administrative change to the regulations, the notice and comment provisions of the Administrative Procedure Act do not apply under 5 U.S.C. 553(b)(B).

Environmental Impact: Categorical Exclusion

The NRC has determined that this final rule is the type of action described in categorical exclusion 10 CFR 51.22(c)(2). Therefore, neither an environmental impact statement nor an environmental assessment has been prepared for this rule.

Paperwork Reduction Act Statement

This final rule does not contain information collection requirements and, therefore, is not subject to the Paperwork Reduction Act of 1995 (44 U.S.C. 3501 *et seq.*).

Public Protection Notification

The NRC may not conduct or sponsor, and a person is not required to respond to, a request for information or an information collection requirement unless the requesting document displays a currently valid Office of Management and Budget (OMB) control number.

Backfit Analysis

The NRC has determined that the backfit rule does not apply to this final rule; therefore, a backfit analysis is not required for this final rule because these amendments are administrative in nature and do not involve any provisions that would impose backfits as defined in 10 CFR Chapter I.

Congressional Review Act

In accordance with the Congressional Review Act of 1996, the NRC has determined that this action is not a major rule and has verified this determination with the Office of Information and Regulatory Affairs of OMB.

List of Subjects

10 CFR Part 55

Criminal penalties, Manpower training programs, Nuclear power plants and reactors, Reporting and recordkeeping requirements.

10 CFR Part 76

Certification, Criminal penalties, Radiation protection, Reporting and recordkeeping requirements, Security measures, Special nuclear material, Uranium enrichment by gaseous diffusion.

■ For the reasons set out in the preamble and under the authority of the Atomic Energy Act of 1954, as amended; the Energy Reorganization Act of 1974, as amended; and 5 U.S.C. 552 and 5 U.S.C. 553, the NRC is adopting the following amendments to 10 CFR Parts 55 and 76.

PART 55—OPERATORS' LICENSES

■ 1. The authority citation for part 55 continues to read as follows:

Authority: Secs. 107, 161, 182, 68 Stat. 939, 948, 953, as amended, sec. 234, 83 Stat. 444, as amended (42 U.S.C. 2137, 2201, 2232, 2282); secs. 201, as amended, 202, 88 Stat. 1242, as amended, 1244 (42 U.S.C. 5841, 5842); sec. 1704, 112 Stat. 2750 (44 U.S.C. 3504 note). Sections 55.41, 55.43, 55.45, and 55.59 also issued under sec. 306, Pub. L. 97–425, 96 Stat. 2262 (42 U.S.C. 10226). Section 55.61 also issued under secs. 186, 187, 68 Stat. 955 (42 U.S.C. 2236, 2237).

■ 2. In § 55.53, paragraph (j) is revised to read as follows:

§ 55.53 Conditions of licenses.

* * * * *

(j) The licensee shall not consume or ingest alcoholic beverages within the protected area of power reactors, or the controlled access area of non-power reactors. The licensee shall not use, possess, or sell any illegal drugs. The licensee shall not perform activities authorized by a license issued under this part while under the influence of alcohol or any prescription, over-the-counter, or illegal substance that could adversely affect his or her ability to safely and competently perform his or her licensed duties. For the purpose of this paragraph, with respect to alcoholic beverages and drugs, the term ''under the influence'' means the licensee exceeded, as evidenced by a confirmed test result, the lower of the cutoff levels for drugs or alcohol contained in 10 CFR Part 26, or as established by the facility licensee. The term ''under the influence'' also means the licensee could be mentally or physically impaired as a result of substance use including prescription and over-the-counter drugs, as determined under the provisions, policies, and procedures established by the facility licensee for its fitness-for-duty program, in such a manner as to adversely affect his or her ability to safely and competently perform licensed duties.

* * * * *

PART 76—CERTIFICATION OF GASEOUS DIFFUSION PLANTS

■ 3. The authority citation for part 76 continues to read as follows:

Authority: Sec. 161, 68 Stat. 948, as amended, secs. 1312, 1701, as amended, 106 Stat. 2932, 2951, 2952, 2953, 110 Stat. 1321–349 (42 U.S.C. 2201, 2297b–11, 2297f); secs. 201, as amended, 204, 206, 88 Stat. 1244, 1245, 1246 (42 U.S.C. 5841, 5842, 5845, 5846). Sec. 234(a), 83 Stat. 444, as amended by Pub. L. 104–134, 110 Stat. 1321, 1321–349 (42 U.S.C. 2243(a)); sec. 1704, 112 Stat. 2750 (44 U.S.C. 3504 note): Energy Policy Act of 2005, Pub. L. No. 109–58, 119 Stat. 2951, as amended.

Section 76.7 is also issued under Pub. L. 95–601, sec. 10, 92 Stat. 2951 as amended by Pub. L. 102–486, sec. 2902, 106 Stat. 3123 (42 U.S.C. 5851). Section 76.22 is also issued under sec. 193(f), as amended, 104 Stat. 2835, as amended by Pub. L. 104–134, 110 Stat. 1321, 1321–349 (42 U.S.C. 2243(f)). Section 76.35(j) also issued under sec. 122, 68 Stat. 939 (42 U.S.C. 2152).

■ 4. In § 76.60, paragraph (f) is revised to read as follows:

§ 76.60 Regulatory requirements which apply.

* * * * *

(f) The Corporation shall comply with the applicable provisions of 10 CFR Part 26, ''Fitness-for-Duty Programs.'' The requirements of this section apply only if the Corporation elects to engage in activities involving formula quantities of strategic special nuclear material. When applicable, the requirements apply only to the Corporation and personnel carrying out the activities specified in § 26.4(d)(1) through (5), of this chapter.

* * * * *

Dated at Rockville, Maryland, this 11th day of August 2009.

For the Nuclear Regulatory Commission.

R.W. Borchardt,

Executive Director for Operations.

[FR Doc. E9–21230 Filed 9–2–09; 8:45 am]

BILLING CODE 7590–01–P

DEPARTMENT OF TRANSPORTATION

Federal Aviation Administration

14 CFR Part 25

[Docket No. NM409; Special Conditions No. 25–386–SC]

Special Conditions: Boeing Model 737–600/–700/–700C/–800/–900 and 900ER Series Airplanes; Seats With Inflatable Lapbelts

AGENCY: Federal Aviation Administration (FAA), DOT.

ACTION: Final special conditions; request for comments.

SUMMARY: These special conditions are issued for Boeing Model 737–600/–700/–700C/–800/–900 and 900ER series airplanes. These airplanes, manufactured by Boeing Commercial Airplanes, will have novel or unusual design features associated with seats with inflatable lapbelts. Special Conditions No. 25–187–SC were issued on October 3, 2001, addressing this issue for the Boeing Model 777 series airplanes. The applicable airworthiness regulations do not contain adequate or appropriate safety standards for this design feature. These special conditions contain the additional safety standards that the Administrator considers necessary to establish a level of safety equivalent to that established by the existing airworthiness standards.

DATES: The effective date of these special condition is August 7, 2009. We must receive your comments by: October 19, 2009.

ADDRESSES: You must mail two copies of your comments to: Federal Aviation Administration, Transport Airplane Directorate, Attn: Rules Docket (ANM–113), Docket No. NM409, 1601 Lind Avenue, SW., Renton, Washington, 98057–3356. You may deliver two copies to the Transport Airplane Directorate at the above address. You must mark your comments: Docket No. NM409. You can inspect comments in the Rules Docket weekdays, except Federal holidays, between 7:30 a.m. and 4 p.m.

FOR FURTHER INFORMATION CONTACT: John Shelden, FAA, Airframe and Cabin Safety Branch, ANM–115, Transport Airplane Directorate, Aircraft Certification Service, 1601 Lind Avenue, SW., Renton, Washington 98057–3356; telephone (425) 227–2785 facsimile (425) 227–1232.

SUPPLEMENTARY INFORMATION: The FAA has determined that notice of, and opportunity for public comment on, these special conditions are impracticable because these procedures would significantly delay issuance of the design approval and thus delivery of the affected airplanes. In addition, the substance of these special conditions has been subject to the public-comment process in several prior instances with no substantive comments received. The FAA therefore finds that good cause exists for making these special conditions effective upon issuance.

Comments Invited

We invite interested people to take part in this rulemaking by sending written comments, data, or views. The most helpful comments reference a specific portion of the special conditions, explain the reason for any recommended change, and include supporting data. We ask that you send us two copies of written comments.

We will file in the docket all comments we receive, as well as a report summarizing each substantive public contact with FAA personnel concerning these special conditions. You can inspect the docket before and after the comment closing date. If you wish to review the docket in person, go to the address in the **ADDRESSES** section of this preamble between 7:30 a.m. and 4 p.m., Monday through Friday, except Federal holidays.

We will consider all comments we receive by the closing date for comments. We will consider comments filed late if it is possible to do so without incurring expense or delay. We may change these special conditions in light of the comments we receive.

If you want the FAA to acknowledge receipt of your comments on these special conditions, include with your comments a self-addressed, stamped postcard on which you have written the docket number. We will stamp the date on the postcard and mail it back to you.

Background

On July 8, 2008, Boeing Commercial Airplanes applied for an amendment to type certificate No. A16WE to include the new Boeing Model 737–600/–700/–700C–800/–900 and 900ER series airplanes. These special conditions allow installation of inflatable lap belts for head injury protection on certain seats in Boeing Model 737–600/–700/–700C/800/–900 and 900ER series airplanes. The FAA has issued similar special conditions, No. 25–187–SC and subsequently 25–187A–SC for Boeing Model 777 series airplanes and Special Condition No. 25–148–SC for Boeing Model 767 series airplanes.

The inflatable lapbelt is designed to limit occupant forward excursion if an accident occurs. This will reduce the potential for head injury, thereby reducing the Head Injury Criterion (HIC) measurement, required by Title 14, Code of Federal Regulations (14 CFR), 25.562(c)(5). The inflatable lapbelt behaves similarly to an automotive inflatable airbag, but in this case the airbag is integrated into the lapbelt, and inflates away from the seated occupant. While inflatable airbags are now standard in the automotive industry, the use of an inflatable lapbelt is novel for commercial aviation.

Title 14, Code of Federal Regulations (14 CFR) 121.311(j) requires that no person may operate a transport category airplane type certificated after January 1, 1958, and manufactured on or after October 27, 2009, in passenger-carrying operations, after October 27, 2009, unless all passenger and flight attendant seats on an airplane operated under part 121 meet the requirements of § 25.562 in effect on or after June 16, 1988.

The Boeing Model 737–600/–700/–700C/–800/–900 and 900ER series airplanes, manufactured before October 27, 2009, operated under part 121, are required to show compliance with certain aspects of § 25.562 as specified per Type Certificate No. A16WE. Boeing Model 737–600/–700/–700C/–800/–900 and 900ER series airplanes manufactured on or after October 27, 2009, operated under part 121, must meet all of the requirements of § 25.562 for passenger and flight attendant seats. It is in the interest of installers to show full compliance with § 25.562, so that an operator under part 121 may be able to use the airplane without having to do additional certification work. In addition, some foreign civil airworthiness authorities have invoked these same operator requirements in the form of airworthiness directives.

Occupants must be protected from head injury, as required by § 25.785, by either the elimination of any injurious object within the striking radius of the head, or by padding. Traditionally, this has required a setback of 35 inches from any bulkhead or other rigid interior feature or, where not practical, specified types of padding. The relative effectiveness of these means of injury protection was not quantified. With the adoption of Amendment 25–64 to part 25, specifically § 25.562, a new standard that quantifies required head injury protection was created.

Each seat type design approved for crew or passenger occupancy during takeoff and landing, as required by § 25.562, must successfully complete dynamic tests or be demonstrated by rational analysis based on dynamic tests of a similar type seat. In particular, the regulations require that persons not suffer serious head injury under the conditions specified in the tests, and that protection must be provided or the seat be designed so that the head impact does not exceed a HIC value of 1000 units. While the test conditions described for HIC are detailed and specific, it is the intent of the requirement that an adequate level of head injury protection be provided for passengers in a severe crash.

Because §§ 25.562 and 25.785 and associated guidance do not adequately address seats with inflatable lapbelts, the FAA recognizes that appropriate pass/fail criteria need to be developed that fully address the safety concerns specific to occupants of these seats.

Type Certification Basis

Under the provisions of 14 CFR 21.101, Boeing must show that the Boeing Model 737–600/–700/–700C/–800/–900 and 900ER series airplanes meet the applicable provisions of the regulations incorporated by reference in Type Certificate No. A16WE, or the applicable regulations in effect on the date of application for the change. The regulations incorporated by reference in the type certificate are commonly referred to as the ''original type certification basis.'' The regulations incorporated by reference in Type Certificate No. A16WE are as follows: Part 25, as amended by Amendment 25–1 through Amendment 25–77, for Boeing Model 737–600, –700, and –800 series airplanes, with the exceptions listed on the type certificate; Title 14 CFR part 25, as amended by Amendment 25–1 through Amendment 25–91, for Boeing Model 737–700C and –900 series airplanes, with the exceptions listed on the type certificate; and part 25, as amended by Amendment 25–1 through Amendment 25–108, for the Boeing model 737–900ER series airplanes, with the exceptions listed on the type certificate.

In addition, the certification basis includes certain special conditions, exemptions, or later amended sections of the applicable parts that are not relevant to these special conditions.

If the regulations incorporating reference do not contain adequate or appropriate safety standards for the Boeing Model 737–600/–700/–700C/–800/–900 and 900ER series airplanes because of a novel or unusual design feature, special conditions are prescribed under § 21.16.

In addition to the applicable airworthiness regulations and special conditions, the Boeing Model 737–600/–700/–700C/–800/–900 and 900ER series airplanes must comply with the fuel vent and exhaust emission requirements of 14 CFR part 34 and the noise certification requirements of 14 CFR part 36.

The FAA issues special conditions as defined in 14 CFR 11.19, in accordance with § 11.38, and they become part of the type certification basis under § 21.17(a)(2).

Special conditions are initially applicable to the model for which they are issued. Should the type certificate for that model be amended later to include any other model that incorporates the same or similar novel or unusual design feature, or should any other model already included on the same type certificate be modified to incorporate the same or similar novel or unusual design feature, the special conditions would also apply to the other model under § 21.101.

Novel or Unusual Design Features

Boeing Model 737–600/–700/–700C/–800/–900 and 900ER series airplanes will incorporate the following novel or unusual design features: seats with inflatable lapbelts.

Discussion

The inflatable lapbelt has two potential advantages over other means of head impact protection. First, it can provide significantly greater protection than would be expected with energy-absorbing pads, and second, it can provide essentially equivalent protection for occupants of all stature. These are significant advantages from a safety standpoint, since such devices will likely provide a level of safety that exceeds the minimum standards of part 25. Conversely, inflatable lapbelts in general are active systems and must be relied upon to activate properly when needed, as opposed to an energy-absorbing pad or upper torso restraint that is passive, and always available. Therefore, the potential advantages must be balanced against this and other potential disadvantages to develop standards for this design feature.

The FAA has considered the installation of inflatable lapbelts to have two primary safety concerns: First, that they perform properly under foreseeable operating conditions, and second, that they do not perform in a manner or at such times as would constitute a hazard to the airplane or occupants. This latter point has the potential to be the more rigorous of the requirements, owing to the active nature of the system.

The inflatable lapbelt will rely on electronic sensors for signaling and pyrotechnic charges for activation so that it is available when needed. These same devices could be susceptible to inadvertent activation, causing deployment in a potentially unsafe manner. The consequences of such deployment must be considered in establishing the reliability of the system. Boeing must substantiate that the effects of an inadvertent deployment in flight are either not a hazard to the airplane, or that such deployment is an extremely improbable occurrence (less than 10^{-9} per flight hour). The effect of an inadvertent deployment on a passenger or crewmember that might be positioned close to the inflatable lapbelt should also be considered. The person could be either standing or sitting. A minimum reliability level will have to be established for this case, depending upon the consequences, even if the effect on the airplane is negligible.

The potential for an inadvertent deployment could be increased as a result of conditions in service. The installation must take into account wear and tear so that the likelihood of an inadvertent deployment is not increased to an unacceptable level. In this context, an appropriate inspection interval and self-test capability are considered necessary. Other outside influences are lightning and high intensity electromagnetic fields (HIRF). Existing regulations regarding lightning § 25.1316, HIRF § 25.1317, and HIRF special condition for the Boeing Model 737–600/–700/–700C/–800/–900 and 900ER series airplanes, SC–25–ANM–132, are applicable. For compliance with those conditions, if inadvertent deployment could cause a hazard to the airplane, the inflatable lapbelt is considered a critical system; if inadvertent deployment could cause injuries to persons, the inflatable lapbelt should be considered an essential system. Finally, the inflatable lapbelt installation should be protected from the effects of fire, so that an additional hazard is not created by, for example, a rupture of the pyrotechnic squib.

For an effective safety system, the inflatable lapbelt must function properly and must not introduce any additional hazards to occupants as a result of its functioning. There are several areas where the inflatable lapbelt differs from traditional occupant protection systems, and requires special conditions to ensure adequate performance.

Because the inflatable lapbelt is essentially a single use device, there is

the potential that it could deploy under crash conditions that are not sufficiently severe as to require head injury protection from the inflatable lapbelt. Since an actual crash is frequently composed of a series of impacts before the airplane comes to rest, this could render the inflatable lapbelt useless if a larger impact follows the initial impact. This situation does not exist with energy absorbing pads or upper torso restraints, which tend to provide continuous protection regardless of severity or number of impacts in a crash event. Therefore, the inflatable lapbelt installation should be such that the inflatable lapbelt will provide protection when it is required, by not expending its protection during a less severe impact. Also, it is possible to have several large impact events during the course of a crash, but there will be no requirement for the inflatable lapbelt to provide protection for multiple impacts.

Since each occupant's restraint system provides protection for that occupant only, the installation must address seats that are unoccupied. It will be necessary to show that the required protection is provided for each occupant regardless of the number of occupied seats and that unoccupied seats may have lapbelts that are active.

The inflatable lap belt should be effective for a wide range of occupants. The FAA has historically considered the range from the fifth percentile female to the ninety-fifth percentile male as the range of occupants that must be taken into account. In this case, the FAA is proposing consideration of a broader range of occupants, due to the nature of the lapbelt installation and its close proximity to the occupant. In a similar vein, these persons could have assumed the brace position, for those accidents where an impact is anticipated. Test data indicate that occupants in the brace position do not require supplemental protection, so it would not be necessary to show that the inflatable lapbelt will enhance the brace position. However, the inflatable lapbelt must not introduce a hazard when it is deployed into a seated, braced occupant.

Another area of concern is the use of seats, so equipped, by children whether they are lap-held, sitting in approved child safety seats, or occupying the seat directly. Although specifically prohibited by the FAA operating regulations, the use of the supplementary loop belt (''belly belt'') may be required by other civil aviation authorities, and should also be considered with the end goal of meeting those regulations. Similarly, if the seat is occupied by a pregnant woman, the installation needs to address such usage, either by demonstrating that it will function properly, or by adding appropriate limitation on usage.

Since the inflatable lapbelt will be electrically powered, there is the possibility that the system could fail due to a separation in the fuselage. Since this system is intended as crash/post-crash protection means, failure due to fuselage separation is not acceptable. As with emergency lighting, the system should function properly if such a separation occurs at any point in the fuselage.

Since the inflatable lapbelt is likely to have a large volume displacement, the inflated bag could potentially impede egress of passengers. Since the bag deflates to absorb energy, it is likely that an inflatable lapbelt would be deflated when persons try to leave their seats. Nonetheless, it is appropriate to specify a time interval after which the inflatable lapbelt may not impede rapid egress. The maximum time allowed for an exit to open fully after actuation is ten seconds, according to § 25.809(b)(2). Therefore it was chosen as the time interval that the inflatable lapbelt must not impede rapid egress from the seat after it is deployed. In actuality, it is unlikely that an exit would be prepared by a flight attendant this quickly in an accident severe enough to warrant deployment of the inflatable lapbelt. The inflatable lapbelt will likely deflate much quicker then ten seconds.

This potential impediment to rapid egress is even more critical at the seats installed in the emergency exit rows. Installation of the inflatable restraints at the Type III exit rows presents different egress concerns as compared with front row seats. However, the need to address egress is already part of the special conditions so there is no change to the special conditions at this time. As noted below, the method of compliance with the special condition may involve specific considerations when the inflatable restraint is installed at Type III exits. From § 25.813 there are clear requirements that there must be access to the exit from the main aisle in the form of an unobstructed passageway, and no interference in opening the exit. The restraint system must not create an impediment to the access to, and the opening, of the exit. These lap belts should be evaluated in the exit row under existing regulations (§§ 25.809 and 25.813) and guidance material. The inflatable lap belts must also be evaluated in post crash conditions, and should be evaluated using representative restraint systems in the bag deployed condition.

This evaluation would include reviewing the access to and opening of the exit, specifically for obstructions in the egress path, and any interferences in opening the exit. Each unique interior configuration must be considered, e.g., passageway width, single or dual passageways with outboard seat removed, etc. If the restraint creates any obstruction or interference, it is likely that it could impede the rapid egress of the airplane. In some cases, the passenger is the one who will open the exit, such as a Type III over wing hatch. Project specific means-of-compliance guidance is likely necessary if these restraint systems are installed at the Type III exit rows.

Finally, it should be noted that the special conditions are applicable to the inflatable lapbelt system as installed. The special conditions are not an installation approval. Therefore, while the special conditions relate to each such system installed, the overall installation approval is separate, and must consider the combined effects of all such systems installed.

Boeing is proposing to install the following novel or unusual design feature of inflatable lap belts on certain seats of Boeing Model 737–600/–700/–700C/–800/–900 and 900ER series airplanes, to reduce the potential for head injury if an accident occurs. The inflatable lapbelt works similar to an automotive inflatable airbag, except that the airbag is integrated with the lap belt of the restraint system.

The performance criteria for head injury protection in objective terms is stated in § 25.562. However, none of these criteria are adequate to address the specific issues raised concerning seats with inflatable lapbelts. The FAA has therefore determined that, in addition to the requirements of part 25, special conditions are needed to address requirements particular to the installation of seats with inflatable lapbelts.

Accordingly, in addition to the passenger injury criteria specified in § 25.785, these special conditions are proposed for the Boeing Model 737 series airplanes equipped with inflatable lapbelts. Other conditions may be developed, as needed, based on further FAA review and discussions with the manufacturer and civil aviation authorities.

For a passenger safety system, the inflatable lapbelt is unique in that it is both an active and entirely autonomous device. While the automotive industry has good experience with inflatable airbags, the conditions of use and reliance on the inflatable lapbelt as the sole means of injury protection are quite

different. In automobile installations, the airbag is a supplemental system and works in conjunction with an upper torso restraint. In addition, the crash event is more definable and of typically shorter duration, which can simplify the activation logic. The airplane-operating environment is also quite different from automobiles and includes the potential for greater wear and tear, and unanticipated abuse conditions (due to galley loading, passenger baggage, etc.). Airplanes also operate where exposure to high intensity electromagnetic fields could affect the lapbelt activation system.

The current Special Conditions for the Boeing Model 777 series airplanes, Special Conditions No. 25–187A–SC, was amended to address flammability of the airbag material. The manufacturer of the inflatable lapbelt was unable to develop a fabric that would meet the inflation requirements for the bag and the flammability requirements of Part I(a)(1)(ii) of appendix F to part 25. The fabrics that were developed that met the flammability requirement did not produce acceptable deployment characteristics. However, the manufacturer was able to develop a fabric that meets the less stringent flammability requirements of Part I(a)(1)(iv) of appendix F to part 25 which has acceptable deployment characteristics.

Part I of appendix F to part 25 specifies the flammability requirements for interior materials and components. There is no reference to inflatable restraint systems in appendix F, because such devices did not exist at the time the flammability requirements were written. The existing requirements are based on both material types, as well as use, and have been specified in light of the state-of-the-art of materials available to perform a given function. Without a specific reference, the default requirement would be for the type of material used to make the inflatable restraint, which is a fabric in this case. However, in writing a special condition, the FAA must also consider the use of the material, and whether the default requirement is appropriate. In this case, the specialized function of the inflatable restraint means that highly specialized materials are needed. The standard normally applied to fabrics is a 12-second vertical ignition test. However, materials that meet this standard do not perform adequately as inflatable restraints. Since the safety benefit of the inflatable restraint is very significant, the flammability standard appropriate for these devices should not screen out suitable materials and thereby effectively eliminate the use of inflatable restraints. The FAA will need to establish a balance between the safety benefit of the inflatable restraint and its flammability performance. Right now, the 2.5-inch per minute horizontal test is considered to provide that balance. As the state-of-the-art in materials progresses (which is expected), the FAA may change this standard in subsequent special conditions to account for improved materials.

The following special conditions can be characterized as addressing either the safety performance of the system, or the system's integrity against inadvertent activation. Because a crash requiring use of the inflatable lapbelts is a rare event, and because the consequences of an inadvertent activation are potentially quite severe, these latter requirements are probably more rigorous from a design standpoint.

Applicability

These special conditions are applicable to the Boeing Model 737–600/–700/–700C/–800/–900 and 900ER series airplanes. Should Boeing apply at a later date for a change to the type certificates to include another model that incorporates the same novel or unusual design feature, or should any other model already included on the same type certificate be modified to incorporate the same or similar novel or unusual design feature, the special conditions would also apply to the other model as well.

Conclusion

This action affects only certain novel or unusual design features on the Boeing Model 737–600/–700/–700C/–800/–900 and 900ER series airplanes. It is not a rule of general applicability, and it affects only Boeing Model 737–600/–700/–700C/–800/–900 and 900ER series airplanes listed on Type Certificate No. A16WE.

List of Subjects in 14 CFR Part 25

Aircraft, Aviation safety, reporting and recordkeeping requirements.

■ The authority citation for these special conditions is as follows:

Authority: 49 U.S.C. 106(g), 40113, 44701, 44702, 44704.

The Special Conditions

Accordingly, pursuant to the authority delegated to me by the administrator, the following special conditions are issued as part of the type certification basis for the Boeing Model 737–600/–700/–700C/–800/ and 900ER series airplanes with inflatable lapbelts installed.

1. Seats With Inflatable Lapbelts

It must be shown that the inflatable lapbelt will deploy and provide protection under crash conditions where it is necessary to prevent serious head injury. The means of protection must take into consideration a range of stature from a two-year-old child to a ninety-fifth percentile male. The inflatable lapbelt must provide a consistent approach to energy absorption throughout that range of occupants. In addition, the following situations must be considered:

a. The seat occupant is holding an infant.

b. The seat occupant is a child in a child restraint device.

c. The seat occupant is a child not using a child restraint device.

d. The seat occupant is a pregnant woman.

2. The inflatable lapbelt must provide adequate protection for each occupant regardless of the number of occupants of the seat assembly, considering that unoccupied seats may have active seatbelts.

3. The design must prevent the inflatable lapbelt from being either incorrectly buckled or incorrectly installed such that the inflatable lapbelt would not properly deploy. Alternatively, it must be shown that such deployment is not hazardous to the occupant, and will provide the required head injury protection.

4. It must be shown that the inflatable lapbelt system is not susceptible to inadvertent deployment as a result of wear and tear, or inertial loads resulting from in-flight or ground maneuvers (including gusts and hard landings), likely to be experienced in service.

5. Deployment of the inflatable lapbelt must not introduce injury mechanisms the seated occupant, or result in injuries that could impede rapid egress. This assessment should include an occupant who is in the brace position when it deploys and an occupant whose belt is loosely fastened.

6. It must be shown that an inadvertent deployment, that could cause injury to a standing or sitting person, is improbable.

7. It must be shown that inadvertent deployment of the inflatable lapbelt, during the most critical part of the flight, will either not cause a hazard to the airplane or is extremely improbable.

8. It must be shown that the inflatable lapbelt will not impede rapid egress of occupants 10 seconds after its deployment.

9. The system must be protected from lightning and HIRF. The threats specified in existing regulations

regarding lightning, § 25.1316, HIRF, § 25.1317, and existing HIRF special conditions for the Boeing Model 737–600/–700/–700C/–800/–900 and 900ER series airplanes, SC–25–ANM–132, are incorporated by reference for the purpose of measuring lightning and HIRF protection. For the purposes of complying with HIRF requirements, the inflatable lapbelt system is considered a ''critical system'' if its deployment could have a hazardous effect on the airplane; otherwise it is considered an ''essential'' system.

10. The inflatable lapbelt must function properly after loss of normal aircraft electrical power, and after a transverse separation of the fuselage at the most critical location. A separation at the location of the lapbelt does not have to be considered.

11. It must be shown that the inflatable lapbelt will not release hazardous quantities of gas or particulate matter into the cabin.

12. The inflatable lapbelt installation must be protected from the effects of fire such that no hazard to occupants will result.

13. There must be a means for a crewmember to verify the integrity of the inflatable lapbelt activation system prior to each flight or it must be demonstrated to reliably operate between inspection intervals.

14. The inflatable material may not have an average burn rate of greater than 2.5 inches/minute when tested using the horizontal flammability test as defined in 14 CFR part 25, appendix F, part I, paragraph (b)(5).

Issued in Renton, Washington, on August 7, 2009.

Stephen P. Boyd,

Acting Manager, Transport Airplane Directorate, Aircraft Certification Service.

[FR Doc. E9–21299 Filed 9–2–09; 8:45 am]

BILLING CODE 4910–13–P

DEPARTMENT OF TRANSPORTATION

Federal Aviation Administration

14 CFR Part 39

[Docket No. FAA–2009–0781; Directorate Identifier 2009–NM–111–AD; Amendment 39–16004; AD 2009–18–08]

RIN 2120–AA64

Airworthiness Directives; Airbus Model A330–200 and –300 Series Airplanes, Model A340–200 and –300 Series Airplanes, and Model A340–541 and –642 Airplanes

AGENCY: Federal Aviation Administration (FAA), Department of Transportation (DOT).

ACTION: Final rule; request for comments.

SUMMARY: The FAA is adopting a new airworthiness directive (AD) for certain Airbus Model A330–200 and –300 series airplanes, Model A340–200 and –300 series airplanes, and Model A340–541 and –642 airplanes. This AD requires replacing certain Thales Avionics pitot probes with certain other pitot probes. This AD results from reports of airspeed indication discrepancies while flying at high altitudes in inclement weather conditions. We are issuing this AD to prevent airspeed discrepancies, which could lead to disconnection of the autopilot and/or auto-thrust functions, and reversion to flight control alternate law and consequent increased pilot workload. Depending on the prevailing airplane altitude and weather, this condition, if not corrected, could result in reduced control of the airplane.

DATES: This AD becomes effective September 8, 2009.

The Director of the Federal Register approved the incorporation by reference of certain publications listed in the AD as of September 8, 2009.

We must receive comments on this AD by October 5, 2009.

ADDRESSES: You may send comments by any of the following methods:

- *Federal eRulemaking Portal:* Go to *http://www.regulations.gov/*. Follow the instructions for submitting comments.
- *Fax:* 202–493–2251.
- *Mail:* U.S. Department of Transportation, Docket Operations, M–30, West Building Ground Floor, Room W12–140, 1200 New Jersey Avenue, SE., Washington, DC 20590.
- *Hand Delivery:* U.S. Department of Transportation, Docket Operations, M–30, West Building Ground Floor, Room W12–140, 1200 New Jersey Avenue, SE., Washington, DC 20590, between 9 a.m. and 5 p.m., Monday through Friday, except Federal holidays.

Examining the AD Docket

You may examine the AD docket on the Internet at *http://www.regulations.gov*; or in person at the Docket Management Facility between 9 a.m. and 5 p.m., Monday through Friday, except Federal holidays. The AD docket contains this AD, the regulatory evaluation, any comments received, and other information. The street address for the Docket Office (telephone 800–647–5527) is in the **ADDRESSES** section. Comments will be available in the AD docket shortly after receipt.

FOR FURTHER INFORMATION CONTACT: Vladimir Ulyanov, Aerospace Engineer, International Branch, ANM–116, Transport Airplane Directorate, FAA, 1601 Lind Avenue, SW., Renton, Washington 98057–3356; telephone (425) 227–1138; fax (425) 227–1149.

SUPPLEMENTARY INFORMATION:

Discussion

The European Aviation Safety Agency (EASA), which is the Technical Agent for the Member States of the European Community, has issued a Notification of a Proposal to Issue an Airworthiness Directive (PAD), PAD 09–099, dated August 10, 2009 (referred to after this as ''the EASA PAD''), to correct an unsafe condition for certain Airbus Model A330–200 and –300 series airplanes, Model A340–200 and –300 series airplanes, and Model A340–541 and –642 airplanes. The EASA PAD states that airspeed indication discrepancies have been reported on Model A330 and A340 airplanes while flying at high altitudes in inclement weather conditions. Investigation results indicate that these airplanes equipped with certain Thales Avionics pitot probes appear to have a greater susceptibility to adverse environmental conditions than certain other pitot probes.

The EASA PAD also states that a new Thales Avionics pitot probe having part number (P/N) C16195BA has been designed, which improves the airspeed indication behavior in heavy rain conditions on Model A320 airplanes. This same pitot probe standard has been made available as an optional installation on Model A330 and A340 airplanes, and although this has shown to be an improvement over the previous Thales Avionics pitot probe, P/N C16195AA standard, it has not yet demonstrated the same level of robustness to withstand high-altitude ice crystals as Goodrich pitot probes having P/N 0851HL.

We are issuing this AD to prevent airspeed discrepancies, which could lead to disconnection of the autopilot and/or auto-thrust functions, and reversion to flight control alternate law and consequent increased pilot workload. Depending on the prevailing airplane altitude and weather, this condition, if not corrected, could result in reduced control of the airplane.

Other Relevant Rulemaking

On February 4, 2004, we issued AD 2004–03–33, Amendment 39–13477 (69 FR 9936, March 3, 2004), for certain Airbus Model A300 B2 and B4 series airplanes; Model A300 B4–600, A300 B4–600R, and A300 F4–600R series airplanes (collectively called A300–600); Model A310 series airplanes; Model A319, A320, and A321 series

airplanes; Model A330–301, –321, –322, –341, and –342 airplanes; and Model A340 series airplanes. Paragraphs (g)(1) and (h)(1) of that AD require, for some Model A330 and A340 airplanes, replacement of certain pitot probes with Goodrich pitot probes having P/N 0851HL. For other Model A330 and A340 airplanes, paragraphs (g)(2) and (h)(2) of that AD require replacement of certain pitot probes with Thales Avionics pitot probe having P/N C16195AA.

Relevant Service Information

Airbus has issued the service bulletins listed in the following table:

TABLE—SERVICE BULLETINS

Service Bulletin	Revision	Date
Airbus Mandatory Service Bulletin A330–34–3231	Original	August 12, 2009.
Airbus Mandatory Service Bulletin A340–34–4238	Original	August 12, 2009.
Airbus Mandatory Service Bulletin A340–34–5071	Original	August 12, 2009.
Airbus Service Bulletin A330–34–3206	01	November 12, 2008.
Airbus Service Bulletin A340–34–4200	01	November 12, 2008.
Airbus Service Bulletin A340–34–5068	Original	December 1, 2008.

Airbus Service Bulletins A330–34–3206, A340–34–4200, and A340–34–5068 describe procedures for replacing Thales Avionics pitot probes, P/N C16195AA, in positions 1, 2, and 3 (captain, first officer, and standby, respectively) with Thales Avionics pitot probes, P/N C16195BA in those positions.

Airbus Mandatory Service Bulletins A330–34–3231, A340–34–4238, and A340–34–5071 describe procedures for replacing Thales Avionics pitot probes, P/N C16195BA, in positions 1 and 3 (captain and standby, respectively) with a Goodrich pitot probe, P/N 0851HL, in those positions.

FAA's Determination and Requirements of This AD

This product has been approved by the aviation authority of another country, and is approved for operation in the United States. Pursuant to our bilateral agreement with the State of Design Authority, we have been notified of the unsafe condition described in the service information referenced above. We are issuing this AD because we evaluated all pertinent information and determined an unsafe condition exists and is likely to exist or develop on other products of the same type design.

We have reviewed the EASA PAD, which proposes to require replacing certain Thales Avionics pitot probes installed on certain Airbus Model A330 and A340 airplanes. Additionally, we have reviewed the numerous airspeed anomalies recently reported on Model A330 and A340 airplanes. Based on our review, we have determined that an unsafe condition exists and immediate airworthiness action for the Model A330 and A340 fleet is warranted.

Therefore, we are issuing this AD to prevent airspeed discrepancies, which could lead to disconnection of the autopilot and/or auto-thrust functions, and reversion to flight control alternate law and consequent increased pilot workload. Depending on the prevailing airplane altitude and weather, this condition, if not corrected, could result in reduced control of the airplane. This AD requires replacing Thales Avionics pitot probes having P/N C16195AA and P/N C16195BA at positions 1 (captain) and 3 (standby) with Goodrich pitot probes having P/N 0851HL at positions 1 and 3. This AD also requires replacing Thales Avionics pitot probes having P/N C16195AA at position 2 (first officer) with Thales Avionics pitot probes having P/N C16195BA at position 2. In addition, this AD provides for optional installation of Goodrich pitot probes having P/N 0851HL at position 2.

We have determined that doing the actions in this new AD terminates the requirements of paragraphs (g)(2) and (h)(2) of AD 2004–03–33, and also is acceptable for compliance with paragraphs (g)(1) and (h)(1) of AD 2004–03–33. We might consider further rulemaking to revise AD 2004–03–33.

This AD corresponds to the EASA PAD, which addresses the identified unsafe condition on Model A330 and A340 airplanes. AD 2004–03–33 is applicable to Model A330 and A340 airplanes and other Airbus airplane models. We might consider further rulemaking to address other Airbus models.

FAA's Justification and Determination of the Effective Date

Airspeed discrepancies could lead to disconnection of the autopilot and/or auto-thrust functions, and reversion to flight control alternate law and consequent increased pilot workload. Depending on the prevailing airplane altitude and weather, this condition, if not corrected, could result in reduced control of the airplane. Because of our requirement to promote safe flight of civil aircraft and thus, the critical need to assure the proper functioning of the pitot probes, and the short compliance time involved with this action, this AD must be issued immediately.

The required compliance time of 120 days is usually sufficient to allow for a brief comment period before adoption of a final rule. In this AD, however, the compliance time of 120 days was selected because of a short-term problem with the availability of sufficient replacement parts; a shorter compliance time might have resulted in the unnecessary removal of airplanes from service pending delivery of replacement parts. Nevertheless, we have determined that immediate adoption of this AD is necessary in this case because of the importance of initiating the required replacements as soon as possible.

Because an unsafe condition exists that requires the immediate adoption of this AD, we find that notice and opportunity for prior public comment hereon are impracticable and that good cause exists for making this amendment effective in less than 30 days.

Comments Invited

This AD is a final rule that involves requirements affecting flight safety, and we did not provide you with notice and an opportunity to provide your comments before it becomes effective. However, we invite you to send any written data, views, or arguments about this AD. Send your comments to an address listed under the **ADDRESSES** section. Include ''Docket No. FAA–2009–0781; Directorate Identifier 2009–NM–111–AD'' at the beginning of your comments. We specifically invite comments on the overall regulatory, economic, environmental, and energy aspects of this AD. We will consider all comments received by the closing date and may amend this AD because of those comments.

We will post all comments we receive, without change, to *http://www.regulations.gov*, including any personal information you provide. We will also post a report summarizing each substantive verbal contact we receive about this AD.

Authority for This Rulemaking

Title 49 of the United States Code specifies the FAA's authority to issue rules on aviation safety. Subtitle I, Section 106, describes the authority of the FAA Administrator. Subtitle VII, Aviation Programs, describes in more detail the scope of the Agency's authority.

We are issuing this rulemaking under the authority described in Subtitle VII, Part A, Subpart III, Section 44701, ''General requirements.'' Under that section, Congress charges the FAA with promoting safe flight of civil aircraft in air commerce by prescribing regulations for practices, methods, and procedures the Administrator finds necessary for safety in air commerce. This regulation is within the scope of that authority because it addresses an unsafe condition that is likely to exist or develop on products identified in this rulemaking action.

Regulatory Findings

We have determined that this AD will not have federalism implications under Executive Order 13132. This AD will not have a substantial direct effect on the States, on the relationship between the national government and the States, or on the distribution of power and responsibilities among the various levels of government.

For the reasons discussed above, I certify that the regulation:

1. Is not a ''significant regulatory action'' under Executive Order 12866;

2. Is not a ''significant rule'' under the DOT Regulatory Policies and Procedures (44 FR 11034, February 26, 1979); and

3. Will not have a significant economic impact, positive or negative, on a substantial number of small entities under the criteria of the Regulatory Flexibility Act.

We prepared a regulatory evaluation of the estimated costs to comply with this AD and placed it in the AD docket. *See* the **ADDRESSES** section for a location to examine the regulatory evaluation.

List of Subjects in 14 CFR Part 39

Air transportation, Aircraft, Aviation safety, Incorporation by reference, Safety.

Adoption of the Amendment

■ Accordingly, under the authority delegated to me by the Administrator, the FAA amends 14 CFR part 39 as follows:

PART 39—AIRWORTHINESS DIRECTIVES

■ 1. The authority citation for part 39 continues to read as follows:

Authority: 49 U.S.C. 106(g), 40113, 44701.

§ 39.13 [Amended]

■ 2. The Federal Aviation Administration (FAA) amends § 39.13 by adding the following new airworthiness directive (AD):

2009–18–08 Airbus: Amendment 39–16004. Docket No. FAA–2009–0781; Directorate Identifier 2009–NM–111–AD.

Effective Date

(a) This AD becomes effective September 8, 2009.

Affected ADs

(b) This AD affects AD 2004–03–33, Amendment 39–13477.

Applicability

(c) This AD applies to the airplanes identified in paragraphs (c)(1), (c)(2), and (c)(3) of this AD, certificated in any category, equipped with Thales Avionics pitot probes having part number (P/N) C16195AA or C16195BA.

(1) Airbus Model A330–201, A330–202, A330–203, A330–223, A330–243, A330–301, A330–302, A330–303, A330–321, A330–322, A330–323, A330–341, A330–342, and A330–343 series airplanes.

(2) Airbus Model A340–211, A340–212, A340–213, A340–311, A340–312, and A340–313 series airplanes.

(3) Airbus Model A340–541 and A340–642 airplanes.

Subject

(d) Air Transport Association (ATA) of America Code 34: Navigation.

Unsafe Condition

(e) This AD results from reports of airspeed indication discrepancies while flying at high altitudes in inclement weather conditions. We are issuing this AD to prevent airspeed discrepancies, which could lead to disconnection of the autopilot and/or auto-thrust functions, and reversion to flight control alternate law and consequent increased pilot workload. Depending on the prevailing airplane altitude and weather, this condition, if not corrected, could result in reduced control of the airplane.

Compliance

(f) You are responsible for having the actions required by this AD performed within the compliance times specified, unless the actions have already been done.

Replacement

(g) Within 120 days after the effective date of this AD, accomplish the applicable replacements required by paragraphs (g)(1) and (g)(2) of this AD.

(1) For airplanes equipped with Thales Avionics pitot probes, P/N C16195AA, in position 2 (first officer): Replace the P/N C16195AA pitot probe with a Thales Avionics pitot probe having P/N C16195BA, in accordance with the Accomplishment Instructions of the applicable service bulletin listed in Table 1 of this AD.

TABLE 1—SERVICE BULLETINS FOR REPLACEMENTS SPECIFIED IN PARAGRAPH (g)(1) OF THIS AD

For model—	Use Airbus Service Bulletin—	Revision—	Dated—
A330–201, –202, –203, –223, –243, –301, –302, –303, –321, –322, –323, –341, –342, and –343 series airplanes.	A330–34–3206	01	November 12, 2008.
A340–211, –212, –213, –311, –312, and –313 series airplanes.	A340–34–4200	01	November 12, 2008.
A340–541 and –642 airplanes	A340–34–5068	Original	December 1, 2008.

(2) For airplanes equipped with Thales Avionics pitot probes, P/N C16195AA or P/N C16195BA, in position 1 (captain) or 3 (standby): Replace P/N C16195AA and P/N C16195BA pitot probes with Goodrich pitot probes having P/N 0851HL, in accordance with the Accomplishment Instructions of the applicable service bulletin listed in Table 2 of this AD.

TABLE 2—SERVICE BULLETINS FOR REPLACEMENTS SPECIFIED IN PARAGRAPH (g)(2) OF THIS AD

For model—	Use Airbus Mandatory Service Bulletin—	Revision—	Dated—
A330–201, –202, –203, –223, –243, –301, –302, –303, –321, –322, –323, –341, –342, and –343 series airplanes.	A330–34–3231	Original	August 12, 2009.
A340–211, –212, –213, –311, –312, and –313 series airplanes.	A340–34–4238	Original	August 12, 2009.
A340–541 and –642 airplanes	A340–34–5071	Original	August 12, 2009.

Optional Replacement

(h) Installing Goodrich pitot probes having P/N 0851HL in position 2 (first officer), in accordance with a method approved by either the Manager, International Branch, ANM–116, Transport Airplane Directorate, FAA; or the European Aviation Safety Agency (EASA) (or its delegated agent); is acceptable for compliance with the requirements of paragraph (g)(1) of this AD.

Credit for Actions Done in Accordance With Previous Issues of Service Bulletins

(i) Accomplishing the replacement required by paragraph (g)(1) of this AD before the effective date of this AD, in accordance with Airbus Service Bulletin A330–34–3206, dated September 14, 2007; or Airbus Service Bulletin A340–34–4200, dated September 14, 2007; as applicable, is acceptable for compliance with the corresponding action required by paragraph (g)(1) of this AD.

Related AD 2004–03–33

(j) Doing the applicable replacements required by this AD terminates the replacements required by paragraphs (g)(2) and (h)(2) of AD 2004–03–33.

(k) Doing the applicable replacements required by this AD is acceptable for compliance with the replacements required by paragraphs (g)(1) and (h)(1) of AD 2004–03–33.

Alternative Methods of Compliance (AMOCs)

(l) The Manager, International Branch, ANM–116, Transport Airplane Directorate, FAA, has the authority to approve AMOCs for this AD, if requested using the procedures found in 14 CFR 39.19. Send information to ATTN: Vladimir Ulyanov, Aerospace Engineer, International Branch, ANM–116, Transport Airplane Directorate, FAA, 1601 Lind Avenue, SW., Renton, Washington 98057–3356; telephone (425) 227–1138; fax (425) 227–1149. Before using any approved AMOC on any airplane to which the AMOC applies, notify your principal maintenance inspector (PMI) or principal avionics inspector (PAI), as appropriate, or lacking a principal inspector, your local Flight Standards District Office. The AMOC approval letter must specifically reference this AD.

Related Information

(m) None.

Material Incorporated by Reference

(n) You must use the applicable service information contained in Table 3 of this AD to do the actions required by this AD, unless the AD specifies otherwise.

(1) The Director of the Federal Register approved the incorporation by reference of this service information under 5 U.S.C. 552(a) and 1 CFR part 51.

(2) For service information identified in this AD, contact Airbus SAS—Airworthiness Office—EAL, 1 Rond Point Maurice Bellonte, 31707 Blagnac Cedex, France; telephone +33 5 61 93 36 96; fax +33 5 61 93 45 80, *e-mail: airworthiness.A330–A340@airbus.com;* Internet *http://www.airbus.com.*

(3) You may review copies of the service information at the FAA, Transport Airplane Directorate, 1601 Lind Avenue, SW., Renton, Washington. For information on the availability of this material at the FAA, call 425–227–1221 or 425–227–1152.

(4) You may also review copies of the service information that is incorporated by reference at the National Archives and Records Administration (NARA). For information on the availability of this material at NARA, call 202–741–6030, or go to: *http://www.archives.gov/federal_register/code_of_federal_regulations/ibr_locations.html.*

TABLE 3—MATERIAL INCORPORATED BY REFERENCE

Service Bulletin	Revision	Date
Airbus Mandatory Service Bulletin A330–34–3231	Original	August 12, 2009.
Airbus Mandatory Service Bulletin A340–34–4238	Original	August 12, 2009.
Airbus Mandatory Service Bulletin A340–34–5071	Original	August 12, 2009.
Airbus Service Bulletin A330–34–3206	01	November 12, 2008.
Airbus Service Bulletin A340–34–4200	01	November 12, 2008.
Airbus Service Bulletin A340–34–5068	Original	December 1, 2008.

Issued in Renton, Washington, on August 24, 2009.

Ali Bahrami,

Manager, Transport Airplane Directorate, Aircraft Certification Service.

[FR Doc. E9–21368 Filed 9–2–09; 8:45 am]

BILLING CODE 4910–13–P

DEPARTMENT OF TRANSPORTATION

Federal Aviation Administration

14 CFR Part 71

[Docket No. FAA–2008–0763; Airspace Docket No. 08–AAL–22]

Establishment of Class E Airspace; Quinhagak, AK

AGENCY: Federal Aviation Administration (FAA), DOT.

ACTION: Final rule.

SUMMARY: This action establishes Class E airspace at Quinhagak, AK to provide adequate controlled airspace to contain aircraft executing Standard Instrument Approach Procedures (SIAPs). Two Standard Instrument Approach Procedures (SIAPs) are being developed for the Quinhagak Airport at Quinhagak, AK. Additionally, one textual Obstacle Departure Procedure (ODP) is being developed. Also, this action makes a minor correction to the geographic coordinates for the airport. This action establishes Class E airspace upward from 700 feet (ft.) above the surface at Quinhagak Airport, Quinhagak, AK.

DATES: *Effective Date:* 0901 UTC, October 22, 2009. The Director of the Federal Register approves this

incorporation by reference action under title 1, Code of Federal Regulations, part 51, subject to the annual revision of FAA Order 7400.9 and publication of conforming amendments.

FOR FURTHER INFORMATION CONTACT: Gary Rolf, AAL–538G, Federal Aviation Administration, 222 West 7th Avenue, Box 14, Anchorage, AK 99513–7587; telephone number (907) 271–5898; fax: (907) 271–2850; e-mail: *gary.ctr.rolf@faa.gov.* Internet address: *http://www.faa.gov/about/office_org/headquarters_offices/ato/service_units/systemops/fs/alaskan/rulemaking/.*

SUPPLEMENTARY INFORMATION:

History

On Thursday, May 28, 2009, the FAA published a notice of proposed rulemaking in the **Federal Register** to establish Class E airspace at Quinhagak, AK (74 FR 25460). Subsequent to publication, the FAA found an error in the geographic coordinates for Quinhagak Airport. This action corrects that error.

Interested parties were invited to participate in this rulemaking proceeding by submitting written comments on the proposal to the FAA. No comments were received. The rule, with corrected coordinates, is adopted as proposed.

The Class E airspace areas designated as 700/1,200 ft. transition areas are published in paragraph 6005 of FAA Order 7400.9S, *Airspace Designations and Reporting Points,* signed October 3, 2008, and effective October 31, 2008, which is incorporated by reference in 14 CFR 71.1. The Class E airspace designations listed in this document will be published subsequently in the Order.

The Rule

This amendment to 14 CFR part 71 establishes Class E airspace at the Quinhagak Airport, AK. This Class E airspace is established to accommodate aircraft executing new instrument procedures, and will be depicted on aeronautical charts for pilot reference. The intended effect of this rule is to provide adequate controlled airspace for Instrument Flight Rules (IFR) operations at the Quinhagak Airport, Quinhagak, AK.

The FAA has determined that this regulation only involves an established body of technical regulations for which frequent and routine amendments are necessary to keep them operationally current. It, therefore—(1) is not a ''significant regulatory action'' under Executive Order 12866; (2) is not a ''significant rule'' under DOT Regulatory Policies and Procedures (44 FR 11034; February 26, 1979); and (3) does not warrant preparation of a regulatory evaluation as the anticipated impact is so minimal. Because this is a routine matter that will only affect air traffic procedures and air navigation, it is certified that this rule will not have a significant economic impact on a substantial number of small entities under the criteria of the Regulatory Flexibility Act.

The FAA's authority to issue rules regarding aviation safety is found in Title 49 of the United States Code. Subtitle 1, Section 106 describes the authority of the FAA Administrator. Subtitle VII, Aviation Programs, describes in more detail the scope of the agency's authority.

This rulemaking is promulgated under the authority described in Subtitle VII, Part A, Subpart 1, Section 40103, Sovereignty and use of airspace. Under that section, the FAA is charged with prescribing regulations to ensure the safe and efficient use of the navigable airspace. This regulation is within the scope of that authority because it creates Class E airspace sufficient in size to contain aircraft executing instrument procedures for the Quinhagak Airport and represents the FAA's continuing effort to safely and efficiently use the navigable airspace.

List of Subjects in 14 CFR Part 71

Airspace, Incorporation by reference, Navigation (air).

Adoption of the Amendment

■ In consideration of the foregoing, the Federal Aviation Administration amends 14 CFR part 71 as follows:

PART 71—DESIGNATION OF CLASS A, CLASS B, CLASS C, CLASS D, AND CLASS E AIRSPACE AREAS; AIRWAYS; ROUTES; AND REPORTING POINTS

■ 1. The authority citation for 14 CFR part 71 continues to read as follows:

Authority: 49 U.S.C. 106(g), 40103, 40113, 40120; E.O. 10854, 24 FR 9565, 3 CFR, 1959–1963 Comp., p. 389.

§ 71.1 [Amended]

■ 2. The incorporation by reference in 14 CFR 71.1 of Federal Aviation Administration Order 7400.9S, *Airspace Designations and Reporting Points,* signed October 3, 2008, and effective October 31, 2008, is amended as follows:

Paragraph 6005 Class E Airspace Extending Upward from 700 feet or More Above the Surface of the Earth.

* * * * *

AAL AK E5 Quinhagak, AK [New]

Quinhagak, Quinhagak Airport, AK
(Lat. 59°45′18″ N., long. 161°50′43″ W.)

That airspace extending upward from 700 feet above the surface within a 6.4-mile radius of the Quinhagak Airport, AK.

* * * * *

Issued in Anchorage, AK, on August 20, 2009.

James L. Krause,

Acting Manager, Alaska Flight Services Information Area Group.

[FR Doc. E9–21059 Filed 9–2–09; 8:45 am]

BILLING CODE 4910–13–P

DEPARTMENT OF TRANSPORTATION

Federal Aviation Administration

14 CFR Part 71

[Docket No. FAA–2009–0196; Airspace Docket No. 09–AAL–3]

Establishment of Class E Airspace; Oooguruk, AK

AGENCY: Federal Aviation Administration (FAA), DOT.

ACTION: Final Rule.

SUMMARY: This action establishes Class E airspace at Oooguruk, AK, providing controlled airspace to contain aircraft executing special Instrument Approach Procedures (IAPs) at two heliport facilities, Oooguruk Drill Site Helipad, and Oooguruk Tie-in Helipad, Oooguruk, AK. Also, this action makes a minor change in the description for the Oooguruk Drill Site Helipad. The FAA is taking this action to enhance the safety and management of Instrument Flight Rules (IFR) operations at Oooguruk, AK.

DATES: *Effective Date:* 0901 UTC, October 22, 2009. The Director of the Federal Register approves this incorporation by reference action under title 1, Code of Federal Regulations, part 51, subject to the annual revision of FAA Order 7400.9 and publication of conforming amendments.

FOR FURTHER INFORMATION CONTACT: Gary Rolf, AAL–538G, Federal Aviation Administration, 222 West 7th Avenue, Box 14, Anchorage, AK 99513–7587; telephone number (907) 271–5898; fax: (907) 271–2850; e-mail: *gary.ctr.rolf@faa.gov.* Internet address: *http://www.faa.gov/about/office_org/headquarters_offices/ato/service_units/systemops/fs/alaskan/rulemaking/.*

SUPPLEMENTARY INFORMATION:

History

On Wednesday April 15, 2009, the FAA proposed to amend Title 14 Code

of Federal Regulations (14 CFR) part 71, to establish Class E airspace upward from 700 ft. above the surface and from 1,200 ft. above the surface at two heliport facilities at Oooguruk, AK (74 FR 17443). Subsequent to publication, the FAA found that a sentence referencing exclusion of restricted airspace in the description for the Oooguruk Drill Site Helipad was inadvertantly omitted. This action corrects this error. Class E controlled airspace extending upward from 700 ft. and 1,200 ft. above the surface in the Oooguruk heliport area is established by this action.

Interested parties were invited to participate in this rulemaking proceeding by submitting written comments on the proposal to the FAA. No comments were received. The rule, with the clarification of the airspace description of the Drill Site Helipad, is adopted as proposed.

The Class E airspace areas designated as 700/1,200 ft. transition areas are published in paragraph 6005 of FAA Order 7400.9S, *Airspace Designations and Reporting Points,* signed October 3, 2008, and effective October 31, 2008, which is incorporated by reference in 14 CFR 71.1. The Class E airspace designations listed in this document will be published subsequently in the Order.

The Rule

This amendment to 14 CFR part 71 establishes Class E airspace extending 700 and 1,200 feet above the surface at Oooguruk, AK. New special IAPs have been developed for two heliport facilities, Oooguruk Drill Site Helipad, and Oooguruk Tie-in Helipad, that will provide adequate controlled airspace for IFR operations at these landing sites. Also, added to the airspace description for the Drill Site Helipad will be ''* * *, excluding of that portion within R–2204 when R–2204 is active.''

The FAA has determined that this regulation only involves an established body of technical regulations for which frequent and routine amendments are necessary to keep them operationally current. It, therefore—(1) is not a ''significant regulatory action'' under Executive Order 12866; (2) is not a ''significant rule'' under DOT Regulatory Policies and Procedures (44 FR 11034; February 26, 1979); and (3) does not warrant preparation of a regulatory evaluation as the anticipated impact is so minimal. Since this is a routine matter that will only affect air traffic procedures and air navigation, it is certified that this rule will not have a significant economic impact on a substantial number of small entities under the criteria of the Regulatory Flexibility Act.

The FAA's authority to issue rules regarding aviation safety is found in Title 49 of the United States Code. Subtitle 1, Section 106 describes the authority of the FAA Administrator. Subtitle VII, Aviation Programs, describes in more detail the scope of the agency's authority.

This rulemaking is promulgated under the authority described in Subtitle VII, Part A, Subpart 1, Section 40103, Sovereignty and use of airspace. Under that section, the FAA is charged with prescribing regulations to ensure the safe and efficient use of the navigable airspace. This regulation is within the scope of that authority because it creates Class E airspace sufficient in size to contain aircraft executing instrument procedures for the two helipads at Oooguruk, AK and represents the FAA's continuing effort to safely and efficiently use the navigable airspace.

List of Subjects in 14 CFR Part 71

Airspace, Incorporation by reference, Navigation (air).

Adoption of the Amendment

■ In consideration of the foregoing, the Federal Aviation Administration amends 14 CFR part 71 as follows:

PART 71—DESIGNATION OF CLASS A, CLASS B, CLASS C, CLASS D, AND CLASS E AIRSPACE AREAS; AIRWAYS; ROUTES; AND REPORTING POINTS

■ 1. The authority citation for 14 CFR part 71 continues to read as follows:

Authority: 49 U.S.C. 106(g), 40103, 40113, 40120; E.O. 10854, 24 FR 9565, 3 CFR, 1959–1963 Comp., p. 389.

§ 71.1 [Amended]

■ 2. The incorporation by reference in 14 CFR 71.1 of Federal Aviation Administration Order 7400.9S, *Airspace Designations and Reporting Points,* signed October 3, 2008, and effective October 31, 2008, is amended as follows:

Paragraph 6005 Class E Airspace Extending Upward from 700 feet or More Above the Surface of the Earth.

* * * * *

AAL AK E5 Oooguruk Drill Site Helipad, AK [New]

Oooguruk, Oooguruk Drill Site Helipad, AK (Lat. 70°29′44″ N., long. 150°15′12″ W.)

That airspace extending upward from 700 feet above the surface within a 6-mile radius of the Oooguruk Drill Site Helipad, AK; and that airspace extending upward from 1,200 feet above the surface within a 73-mile radius of the Oooguruk Drill Site Helipad, AK, excluding that portion within R2204 when R2204 is active.

* * * * *

AAL AK E5 Oooguruk Tie-in Helipad, AK [New]

Oooguruk, Oooguruk Tie-in Helipad, AK (Lat. 70°24′51″ N., long. 150°01′07″ W.)

That airspace extending upward from 700 feet above the surface within a 6-mile radius of the Oooguruk Tie-in Helipad AK, excluding that portion within R2204 when R2204 is active; and that airspace extending upward from 1,200 feet above the surface within a 73-mile radius of the Oooguruk Tie-in Helipad, AK, excluding that portion within R2204 when R2204 is active.

* * * * *

Issued in Anchorage, AK, on August 20, 2009.

James L. Krause,

Acting Manager, Alaska Flight Services Information Area Group.

[FR Doc. E9–21061 Filed 9–2–09; 8:45 am]

BILLING CODE 4910–13–P

DEPARTMENT OF COMMERCE

National Oceanic and Atmospheric Administration

15 CFR Part 909

DEPARTMENT OF HOMELAND SECURITY

Coast Guard

33 CFR Part 151

[USCG–2007–0164]

RIN 0648–AV68; 1625–AB24

Definition of Marine Debris for Purposes of the Marine Debris Research, Prevention, and Reduction Act

AGENCY: National Ocean Service (NOS), National Oceanic and Atmospheric Administration (NOAA), Department of Commerce; Coast Guard, Department of Homeland Security (DHS).

ACTION: Final rule.

SUMMARY: NOAA and the Coast Guard are defining ''marine debris'' for purposes of the Marine Debris Research, Prevention, and Reduction Act (the Act). The Act requires NOAA and the Coast Guard to jointly develop a definition and promulgate it through regulations; this rule represents the agencies' compliance with the Act. For the purposes of the Marine Debris Research, Prevention, and Reduction Act only, marine debris is defined as any persistent solid material that is

manufactured or processed and directly or indirectly, intentionally or unintentionally, disposed of or abandoned into the marine environment or the Great Lakes.

DATES: This final rule is effective October 5, 2009.

ADDRESSES: Comments and related material received from the public, as well as documents mentioned in this preamble as being available in the docket, are part of docket USCG–2007–0164 and are available for inspection and copying at the Docket Management Facility (M–30), U.S. Department of Transportation, West Building Ground Floor, Room W12–140, 1200 New Jersey Avenue, SE., Washington, DC 20590, between 9 a.m. and 5 p.m., Monday through Friday, except Federal holidays. You also may find this docket on the Internet by going to *http://www.regulations.gov*, selecting the Advanced Docket Search option on the right side of the screen, typing USCG–2007–0164 into the Docket ID box, pressing Enter, and then clicking on the item in the Docket ID column.

FOR FURTHER INFORMATION CONTACT: If you have questions about this rule, call Dr. Holly A. Bamford, NOAA Marine Debris Program, telephone 301–713–2989, or David Major, Environmental Standards Division, U.S. Coast Guard Headquarters, telephone 202–372–1402. If you have questions about viewing the docket, call Renee V. Wright, Program Manager, Docket Operations, telephone 202–366–9826.

SUPPLEMENTARY INFORMATION:

Table of Contents for Preamble

I. Abbreviations
II. Regulatory History
III. Background and Purpose
IV. Discussion of Comments and Changes
A. Comments on the Purpose of the Definition
B. Comments on ''Marine Environment''
C. Comments on ''Solid''
D. Comments on ''Persistent''
E. Comments on ''Manufactured or Processed''
F. Comments on ''Disposed of or Abandoned Into''
G. Comments on Discharges in Compliance With Law
H. Comments on Items Placed in the Marine Environment by Permit
I. Comments on Medical Waste and Hazardous Materials
J. Comments on Consultation With the Interagency Marine Debris Coordinating Committee
V. Regulatory Analyses
A. Regulatory Planning and Review
B. Small Entities
C. Assistance for Small Entities
D. Collection of Information
E. Federalism
F. Unfunded Mandates Reform Act
G. Taking of Private Property
H. Civil Justice Reform
I. Protection of Children
J. Indian Tribal Governments
K. Energy Effects
L. Technical Standards
M. Department of Commerce Docket Number
N. Environment

I. Abbreviations

IMDCC Interagency Marine Debris Coordinating Committee
CFR Code of Federal Regulations
FR *Federal Register*
MARPOL 73/78 International Convention for the Prevention of Pollution from Ships, 1973, as modified by the protocol of 1978
NEPA National Environmental Policy Act
NOAA National Oceanic and Atmospheric Administration
NOAA Program NOAA's Marine Debris Prevention and Removal Program
NOS National Ocean Service
NPRM Notice of proposed rulemaking
NRC National Research Council
OMB Office of Management and Budget
U.S.C. United States Code

II. Regulatory History

On May 27, 2008, NOAA and the Coast Guard published a notice of proposed rulemaking entitled ''Definition of Marine Debris for Purposes of the Marine Debris Research, Prevention, and Pollution Act'' in the **Federal Register** (73 FR 30322). The title of the rulemaking has been corrected by replacing the word ''pollution'' with ''reduction,'' to reflect the correct name of the Act. NOAA and the Coast Guard received six letters, containing a total of 24 comments, from the public, and four letters, containing 17 comments, from Federal agencies commenting on the proposed rule. All comments are discussed below. No public meeting was requested and none was held.

III. Background and Purpose

As society has developed new uses for materials, particularly plastics, the variety and quantity of items found in the marine environment has increased dramatically. These products range from common domestic material (*e.g.,* bags, cups, bottles, balloons) to industrial products (*e.g.,* strapping bands, plastic sheeting, hard hats, resin pellets) to lost or discarded fishing gear (*e.g.,* nets, buoys, traps, lines, light sticks).

In 2006, Congress passed the Marine Debris Research, Prevention, and Reduction Act (the Act) (33 U.S.C. 1951–1958 (2006)), with the purpose of identifying, determining the sources of, assessing, reducing, and preventing marine debris and its adverse impacts on the marine environment and navigation safety.

The Act makes permanent a Marine Debris Prevention and Removal Program within NOAA (NOAA Program) that intends to reduce and prevent the occurrence and adverse impacts of marine debris on the marine environment and navigation safety. The NOAA Program includes mapping, identification, impact assessment, removal, and prevention of marine debris, with a focus on threats to living marine resources, including commercial fisheries and species protected under the Endangered Species Act and Marine Mammal Protection Act, and the habitat upon which they depend. The NOAA Program uses non-regulatory measures to reduce and prevent marine debris and the loss of fishing gear, including the development of local or regional protocols for lost gear reduction and prevention. Examples of such measures include new fishing gear technology, implementation of incentives to reduce lost gear, outreach and education to commercial users and the general public, and other non-regulatory measures to minimize the volume of marine debris and lost and discarded fishing gear, and to aid in its recovery. The Act authorizes NOAA to provide grants to entities for the research, prevention, and reduction of marine debris.

The Act requires the Coast Guard to enforce the International Convention for the Prevention of Pollution from Ships, 1973, as modified by the 1978 Protocol (MARPOL 73/78), Annex V, and the Act to Prevent Pollution from Ships, 33 USC 1901–1915 (1996). The Coast Guard will continue to monitor and enforce the requirements of these acts among the appropriate regulated industries and communities. The Coast Guard intends to increase international cooperation to reduce marine debris, and to maintain its voluntary reporting program in order to ensure the reporting of damage to vessels and disruption to navigation caused by marine debris. The Act also required the Coast Guard to submit to Congress a report evaluating the Coast Guard's progress on these initiatives; the report required under 33 U.S.C. 1953(b) was completed in 2007. In addition, the Act required the Coast Guard to obtain a report from the National Research Council (NRC) on the effectiveness of international and domestic measures to prevent and reduce marine debris and its impacts; this report was completed and presented to Congress by NRC in September, 2008.

The Act also reactivated the Interagency Marine Debris Coordinating Committee (IMDCC), an interagency Federal body responsible for developing and recommending comprehensive and

multi-disciplinary approaches to reduce the sources and impacts of marine debris to the nation's marine environment, natural resources, public safety, and economy. The IMDCC meets quarterly to ensure coordination of research, monitoring, education, and regulatory actions addressing the persistent marine debris problem.

As codified in Title 33 of the United States Code, the Act requires NOAA and the Coast Guard, in consultation with the IMDCC, to ''jointly develop and promulgate through regulations a definition of the term 'marine debris' for the purposes of this Act.'' 33 U.S.C. 1954(b)(2006). The Act expressly limits the application of the definition of marine debris to the implementation and requirements of the Act. The Act does not authorize NOAA or the Coast Guard to undertake regulatory actions other than the promulgation of this definition, and the definition of marine debris does not affect the regulatory or management activities of other Federal agencies.

NOAA and the Coast Guard worked together to develop and propose a definition, taking into account both agencies' responsibilities under the Act. The term ''marine debris'' has a variety of meanings to the many entities working in and affecting the marine environment. The definition promulgated by this rule, however, focuses on solid debris from land-based and ocean-based sources. While NOAA and the Coast Guard considered alternative definitions, this definition will allow NOAA to consider the broadest possible range of marine debris activities for grant and research support as provided in the Act. The definition will also provide the Coast Guard sufficient parameters to conduct useful and focused studies and reports required by the Act.

As required by the Act, the two agencies consulted with the IMDCC during the development of this definition. Some IMDCC members suggested that the definition include the term ''unauthorized'' in order to exclude materials explicitly permitted to be discharged into the marine environment. NOAA and the Coast Guard did not include the term ''unauthorized'' in the definition. As discussed in more detail below, such a limited definition would be inconsistent with the objectives of the Act, which are to identify, determine the sources of, assess, reduce, and prevent the full range of marine debris and its adverse effects on the marine environment and navigation safety. Authority to dispose of or abandon material that may be considered marine debris as defined in this regulation is not affected by the promulgation of this definition or the implementation of the programs established pursuant to the Act. Some IMDCC members also suggested that the definition of marine debris be limited to debris with adverse effects on the marine environment. NOAA and the Coast Guard did not include this limitation because it would prevent the NOAA program from supporting or conducting research where impacts of debris on marine resources are unknown or uncertain. Limiting the range of research opportunities in this way would diminish the ability of NOAA and the Coast Guard to fulfill the objectives of the Act.

On May 27, 2008, the two agencies published a notice of proposed rulemaking (NPRM) proposing a definition of marine debris for purposes of the Act. The proposed definition read as follows: ''For the purposes of the Marine Debris Research, Prevention, and Reduction Act (33 U.S.C. 1951–1958 (2006)) only, marine debris is defined as any persistent solid material that is manufactured or processed and directly or indirectly, intentionally or unintentionally, disposed of or abandoned into the marine environment or the Great Lakes.''

IV. Discussion of Comments and Changes

The Coast Guard and NOAA received 10 letters containing a total of 41 comments on the proposed definition. After consideration of all the comments, and for the reasons set out below, the Coast Guard and NOAA adopt the proposed definition without changes.

A. Comments on the Purpose of the Definition

Several commenters approached the definition of marine debris from an enforcement perspective, assuming that items within the definition of marine debris would necessarily be subject to anti-pollution mandates. An item that satisfies the definition of marine debris may, in some cases, be addressed by anti-pollution laws that prohibit the disposal or abandonment of the material. However, the fact that a material satisfies the definition of marine debris does not mean its disposal or abandonment is prohibited.

The Act does not prohibit the disposal or abandonment of marine debris, nor does it provide regulatory authority to do so. Instead, the Act is intended to help identify, assess, reduce, and prevent marine debris. See Section III of this preamble for details on agency involvement in addressing these areas. The definition of marine debris will be used only for the implementation of the Act.

B. Comments on ''Marine Environment''

Two commenters asked what areas are included in the term ''marine environment.'' NOAA and the Coast Guard use the term ''marine environment'' consistently with its use in other sections of the United States Code. The term ''marine environment'' is defined in various parts of the United States Code to include the high seas, exclusive economic zone, territorial sea, coastal waters, Great Lakes, navigable waters of the United States, and the lands therein and thereunder, and adjacent shorelines and shorelands. NOAA and the Coast Guard specifically included the Great Lakes in the definition of marine debris to avoid confusion. The marine environment does not include airspace above bodies of water.

One commenter requested that the term ''marine environment'' be replaced with the term ''aquatic environment'' in order to cover debris originating from land-based sources via creeks and tributaries. As explained in part F below, such debris is already addressed by the definition.

C. Comments on ''Solid''

Three commenters asked whether specific materials they consider to be ''semi-solid'' would be included within the definition of marine debris, or encouraged that such materials be included. Marine debris, pursuant to the Act, is defined as any persistent solid material and therefore does not include semi-solids, such as tar balls and sewer cakes. NOAA and the Coast Guard concluded that the Act was not intended to cover materials other than solid materials. Internationally and domestically, the generally accepted usage of ''marine debris,'' including in research, refers to solid items. For example, all of the marine debris items catalogued in the 1988 Report of the Interagency Task Force on Persistent Debris are solids.

D. Comments on ''Persistent''

Three commenters asked for clarification of the word ''persistent'' as used in the definition. The term ''persistent'' is intended to capture items that degrade slowly, as noted in the CEQ Ocean Blueprint for the 21st Century and the House Report on the Act (H.R. Rep. No. 109–332, pt. 2, at 1759 (2006)). This also is consistent with the 1988 Report of the Interagency Task Force on Persistent Debris, in which small pieces of plastic and plastic particles are recognized as marine

debris. Persistency is affected by material composition, movement within the water column, and exposure to sunlight, among other things. The ability of marine debris to travel long distances away from the point of origin is taken into account in considering persistency.

E. Comments on ''Manufactured or Processed''

Five commenters requested the definition be modified to include ''naturally occurring'' debris such as downed trees, or expressed interest in the treatment of lost agricultural cargo. The Coast Guard and NOAA concluded that organic matter that is not processed or manufactured, that enters the marine environment, would not meet the definition of marine debris within the context of the Act, which focuses on manufactured and processed items. To the extent that organic matter has been subject to manufacturing or processing, those items may be considered marine debris if they satisfy the remainder of the definition.

One commenter requested the definition be modified to include materials ''intended to be processed.'' The commenter provided the specific example of raw materials used for plastic production, namely pre-production plastic pellets. All plastic items have been created through a manufacturing process, as they do not exist naturally in the environment. Therefore, plastic in any form and of any size already is included in the definition of marine debris. Similar manufactured persistent solids mentioned by commenters, such as golf balls, also are considered marine debris.

F. Comments on ''Disposed of or Abandoned Into''

Commenters described a variety of means by which material can be disposed of or abandoned into the marine environment, such as transport by wind or storm drains, and inquired how or whether the manner of transport affects whether or not the material is within this definition of marine debris. The means by which material enters into marine environment does not affect whether that material is considered marine debris. As noted in the preamble above, a variety of both sea and landside events and activities, such as storm water runoff, wind, or natural disasters, may ultimately result in materials being abandoned or disposed of in the marine environment. For that reason, the definition of marine debris includes materials disposed of or abandoned ''directly or indirectly, intentionally or unintentionally'' into the marine environment.

G. Comments on Discharges in Compliance With Law

Three commenters commented on whether the definition of marine debris should include materials discharged in compliance with relevant enforcement regimes. A persistent solid material that is manufactured or processed, and disposed of or abandoned into the marine environment, is considered marine debris even when the disposal or abandonment is legally permissible. As noted above, NOAA and the Coast Guard define marine debris exclusively for the purposes of the Act, and the Act does not create an enforcement regime. Existing enforcement regimes referenced in the Act, such as the Act to Prevent Pollution from Ships and MARPOL Annex V, allow the legal discharge of items into the sea. Congress did not state in the Act or legislative history that a definition exclude those items. Moreover, it would be impractical to classify items based on source rather than location. For example, a tin can located in the sea may have been discharged in accordance with MARPOL or may have blown into the ocean from a pier. In both circumstances, considering the tin can to be marine debris fulfills the intent of the Act.

The Act is non-regulatory and overlaps with current enforcement regimes established by other laws. The fact that an item is legally disposed of or abandoned does not prevent it being studied or tracked. Environmental goals can be achieved through non-regulatory means, including study and the promotion of new methods to prevent, reduce, and mitigate the effects of debris. Thus, marine debris of any type is open for research or other activities as specified in the Act.

H. Comments on Items Placed in the Marine Environment by Permit

Four commenters raised concerns that materials placed in the marine environment by public agencies or under permit by public agencies—such as artificial reefs, marine structures, vessels, rigs, pipelines, and navigational and weather buoys—may be deemed marine debris. The Coast Guard and NOAA do not consider such items disposed of or abandoned, because the items are intact, on station, and monitored. However, an item or piece of an item originally placed or permitted in the marine environment, but that subsequently breaks apart, becomes lost, or is no longer actively monitored, could be considered disposed of or abandoned and would meet the definition of marine debris. The Coast Guard and NOAA emphasize that a government approval or permission for disposal or abandonment of material into the marine environment does not exclude that material from research, removal, or outreach activities contemplated by the Act. For example, a tire reef off the coast of Florida, legally placed there in 1972, has fragmented and allowed tires to drift across the seafloor; those tires are considered marine debris for purposes of the Act.

I. Comments on Medical Waste and Hazardous Materials

Three commenters expressed concern about medical waste, such as syringes, located in the marine environment, and about floating containers containing hazardous, or unknown but potentially hazardous, substances. Solid medical waste material such as syringes and floating or submerged containers are marine debris under the definition. Hazardous material response is not within the scope of the Act; however, the remediation of many types of marine debris, including hazardous materials covered by the Comprehensive Environmental Response and Liability Act (42 U.S.C. 9601 *et seq.*), is provided for by a variety of statutes.

J. Comments on Consultation With the Interagency Marine Debris Coordinating Committee

Two commenters questioned the lack of consensus with some members of the IMDCC regarding the definition of marine debris. The Act directs NOAA and the Coast Guard to consult with the IMDCC in developing the definition of marine debris, and this consultation took place at a number of quarterly IMDCC meetings through August, 2007. NOAA and the Coast Guard have addressed the comments made by IMDCC members in this preamble and will continue to work with the IMDCC in implementing the Act.

V. Regulatory Analyses

The Coast Guard and NOAA developed this rule after considering numerous statutes and executive orders related to rulemaking. Below is a summary of our analyses based on 13 of these statutes or executive orders.

A. Regulatory Planning and Review

This rule is not a significant regulatory action under section 3(f) of Executive Order 12866, Regulatory Planning and Review, and does not require an assessment of potential costs and benefits under section 6(a)(3) of that Order. The Office of Management and

Budget has not reviewed it under that Order.

Public comments on the NPRM are summarized in Section IV of this preamble, ''Discussion of Comments and Changes.'' NOAA and the Coast Guard received no public comments and made no changes that would alter the assessment of impacts in the NPRM. A summary of the assessment follows.

The Act requires the Coast Guard and NOAA to jointly develop and promulgate a definition of marine debris for the purposes of the Act. Accordingly, this rulemaking creates a joint Coast Guard and NOAA definition of the term ''marine debris'' for the purposes of the Act. The Act does not authorize NOAA or the Coast Guard to undertake regulatory or management activities of other Federal agencies. Instead, the drafting agencies expect to use the definition of marine debris for the administration of research and educational grants. Such grants may map, identify, or assess the impacts of marine debris.

B. Small Entities

Under the Regulatory Flexibility Act (5 U.S.C. 601–612), the drafting agencies considered whether this rule would have a significant economic impact on a substantial number of small entities. The term ''small entities'' comprises small businesses, not-for-profit organizations that are independently owned and operated and are not dominant in their fields, and governmental jurisdictions with populations of less than 50,000.

In the NPRM, NOAA and the Coast Guard certified under 5 U.S.C. 605(b) that the proposed rule would not have a significant economic impact on a substantial number of small entities. See the ''Regulatory Flexibility Act'' section of the NPRM for the complete threshold analysis. NOAA and the Coast Guard found no additional data or information that would change the certification in the NPRM.

Therefore, the Coast Guard and NOAA certify under 5 U.S.C. 605(b) that this rule will not have a significant economic impact on a substantial number of small entities.

C. Assistance for Small Entities

Under section 213(a) of the Small Business Regulatory Enforcement Fairness Act of 1996 (Pub. L. 104–121), NOAA and the Coast Guard will assist all entities, including small entities, in understanding this rule. NOAA and the Coast Guard do not retaliate against any entity, including small entities, that may question or complain about this rule or any policy or action of the NOAA or the Coast Guard.

D. Collection of Information

This rule calls for no new collection of information under the Paperwork Reduction Act of 1995 (44 U.S.C. 3501–3520).

E. Federalism

A rule has implications for federalism under Executive Order 13132, Federalism, if it has a substantial direct effect on State or local governments and would either preempt State law or impose a substantial direct cost of compliance on them. NOAA and the Coast Guard have analyzed this rule under that Order and have determined that it does not have implications for federalism.

F. Unfunded Mandates Reform Act

The Unfunded Mandates Reform Act of 1995 (2 U.S.C. 1531–1538) requires Federal agencies to assess the effects of their discretionary regulatory actions. In particular, the Act addresses actions that may result in the expenditure by a State, local, or tribal government, in the aggregate, or by the private sector of $100,000,000 or more in any one year. Though this rule will not result in such an expenditure, NOAA and the Coast Guard do discuss the effects of this rule elsewhere in this preamble.

G. Taking of Private Property

This rule will not effect a taking of private property or otherwise have taking implications under Executive Order 12630, Governmental Actions and Interference with Constitutionally Protected Property Rights.

H. Civil Justice Reform

This rule meets applicable standards in sections 3(a) and 3(b)(2) of Executive Order 12988, Civil Justice Reform, to minimize litigation, eliminate ambiguity, and reduce burden.

I. Protection of Children

NOAA and the Coast Guard have analyzed this rule under Executive Order 13045, Protection of Children from Environmental Health Risks and Safety Risks. This rule is not an economically significant rule and does not create an environmental risk to health or risk to safety that might disproportionately affect children.

J. Indian Tribal Governments

This rule does not have tribal implications under Executive Order 13175, Consultation and Coordination with Indian Tribal Governments, because it does not have a substantial direct effect on one or more Indian tribes, on the relationship between the Federal Government and Indian tribes, or on the distribution of power and responsibilities between the Federal Government and Indian tribes.

K. Energy Effects

NOAA and the Coast Guard have analyzed this rule under Executive Order 13211, Actions Concerning Regulations That Significantly Affect Energy Supply, Distribution, or Use. NOAA and the Coast Guard have determined that it is not a ''significant energy action'' under that order because it is not a ''significant regulatory action'' under Executive Order 12866 and is not likely to have a significant adverse effect on the supply, distribution, or use of energy. The Administrator of the Office of Information and Regulatory Affairs has not designated it as a significant energy action. Therefore, it does not require a Statement of Energy Effects under Executive Order 13211.

L. Technical Standards

The National Technology Transfer and Advancement Act (NTTAA) (15 U.S.C. 272 note) directs agencies to use voluntary consensus standards in their regulatory activities unless the agency provides Congress, through the Office of Management and Budget, with an explanation of why using these standards would be inconsistent with applicable law or otherwise impractical. Voluntary consensus standards are technical standards (*e.g.,* specifications of materials, performance, design, or operation; test methods; sampling procedures; and related management systems practices) that are developed or adopted by voluntary consensus standards bodies.

This rule does not use technical standards. Therefore, NOAA and the Coast Guard did not consider the use of voluntary consensus standards.

M. Department of Commerce Docket Number

The clearance docket number for the Department of Commerce is: 070615197–91195–02.

N. Environment

The Coast Guard has analyzed this rule under Department of Homeland Security Directive 023–01 and Commandant Instruction M16475.lD, which guide the Coast Guard in complying with the National Environmental Policy Act of 1969 (NEPA) (42 U.S.C. 4321–4370f), and NOAA has analyzed the proposed rule under NOAA Administrative Order 216–6, which sets forth NOAA's

environmental review procedures for implementing NEPA. The agencies have concluded that this action is one of a category of actions that do not individually or cumulatively have a significant effect on the human environment. This rule is categorically excluded under section 6(b) of the ''Appendix to National Environmental Policy Act: Coast Guard Procedures for Categorical Exclusions, Notice of Final Agency Policy'' (67 FR 48244, July 23, 2002) and NOAA NAO 216–6 sections 5.05 and 6.03(c)(3)(i). This rule involves congressionally mandated regulations designed to improve or protect the environment. An environmental analysis checklist and the relevant categorical exclusion determinations are available in the docket where indicated under **ADDRESSES**.

List of Subjects

15 CFR Part 909

Marine resources, Marine debris, Marine pollution, and Ocean dumping.

33 CFR Part 151

Administrative practice and procedure, Oil pollution, Penalties, Reporting and recordkeeping requirements, and Water pollution control.

NOAA signature.

Dated: August 19, 2009.

John H. Dunnigan,

Assistant Administrator for Ocean Services and Coastal Zone Management.

Coast Guard signature.

Dated: August 20, 2009.

B.M. Salerno,

RADM, Coast Guard, Assistant Commandant for Marine Safety, Security and Stewardship.

■ For the reasons discussed in the preamble, NOAA adds 15 CFR part 909 and the Coast Guard amends 33 CFR part 151 as follows:

■ 1. 15 CFR Part 909 is added to read as follows:

PART 909—MARINE DEBRIS

§ 909.1 Definition of marine debris for the purposes of the Marine Debris Research, Prevention, and Reduction Act.

Authority: 33 U.S.C. 1951–1958 (2006).

§ 909.1 Definition of marine debris for the purposes of the Marine Debris Research, Prevention, and Reduction Act.

(a) *Marine debris.* For the purposes of the Marine Debris Research, Prevention, and Reduction Act (33 U.S.C. 1951–1958 (2006)) only, marine debris is defined as any persistent solid material that is manufactured or processed and directly or indirectly, intentionally or unintentionally, disposed of or abandoned into the marine environment or the Great Lakes.

(b) NOAA and the Coast Guard have jointly promulgated the definition of marine debris in this part. Coast Guard's regulation may be found in 33 CFR 151.3000.

PART 151—VESSELS CARRYING OIL, NOXIOUS LIQUID SUBSTANCES, GARBAGE, MUNICIPAL OR COMMERCIAL WASTE, AND BALLAST WATER

■ 2. Add Subpart E to Part 151, to read as follows:

Subpart E—Definition of Marine Debris for the purposes of the Marine Debris Research, Prevention, and Reduction Act

Authority: 33 U.S.C. 1951–1958 (2006); 33 CFR 1.05–1; Department of Homeland Security Delegation No. 0170.1.

§ 151.3000 Definition of Marine Debris for the purposes of the Marine Debris Research, Prevention, and Reduction Act.

(a) *Marine debris.* For the purposes of the Marine Debris Research, Prevention, and Reduction Act (33 U.S.C. 1951–1958 (2006)) only, marine debris is defined as any persistent solid material that is manufactured or processed and directly or indirectly, intentionally or unintentionally, disposed of or abandoned into the marine environment or the Great Lakes.

(b) NOAA and the Coast Guard have jointly promulgated the definition of marine debris in this part. NOAA's regulation may be found in 15 CFR part 909.

[FR Doc. E9–21261 Filed 9–2–09; 8:45 am]

BILLING CODE 3510–JE–P; 4910–15–P

DEPARTMENT OF LABOR

Employment and Training Administration

20 CFR Part 655

RIN 1205–AB54

Labor Certification Process and Enforcement for Temporary Employment in Occupations Other Than Agriculture or Registered Nursing in the United States (H–2B Workers), and Other Technical Changes; Correction

AGENCY: Employment and Training Administration, Department of Labor.

ACTION: Technical correction.

SUMMARY: This document contains a correction to the Final Rule of the H–2B program that was published on December 19, 2008. The Final Rule re-engineers the application filing and review process by centralizing processing and by enabling employers to conduct pre-filing recruitment of United States (U.S.) workers. In addition, the rule enhances the integrity of the H–2B program through the introduction of post-adjudication audits and procedures for penalizing employers who fail to meet program requirements. This rule also makes technical changes to both the H–1B and the permanent labor certification program regulations to reflect operational changes stemming from this regulation.

DATES: This technical correction is effective September 3, 2009. The technical correction is applicable beginning January 18, 2009.

FOR FURTHER INFORMATION CONTACT: For information on the labor certification process governed by this correction, contact William L. Carlson, Administrator, Office of Foreign Labor Certification, Employment and Training Administration, U.S. Department of Labor, 200 Constitution Avenue, NW., Room C–4312, Washington, DC 20210. Telephone: (202) 693–3010 (this is not a toll-free number). Individuals with hearing or speech impairments may access the telephone via TTY by calling the toll-free Federal Information Relay Service at 1–800–877–8339.

SUPPLEMENTARY INFORMATION:

Background

On December 19, 2008 the Department of Labor's (Department) Employment and Training Administration (ETA) published a Final Rule titled ''Labor Certification Process and Enforcement for Temporary Employment in Occupations Other Than Agriculture or Registered Nursing in the United States (H–2B Workers), and Other Technical Changes.'' It has come to ETA's attention that due to a technical oversight a certain part of the final regulations was deleted from the Final Rule publication. The Department did not intend to remove this language from the regulations and through this correction notice the Department seeks to reinsert the inadvertently deleted language.

Need for Correction

As published, the final regulation erroneously removed a paragraph of § 655.731 that the Department had intended to remain. The intention of this Notice is to reestablish that paragraph.

List of Subjects in 20 CFR Part 655

Administrative practice and procedure, Foreign workers, Employment, Employment and training, Enforcement, Forest and forest products, Fraud, Health professions, Immigration, Labor, Longshore and harbor work, Migrant labor, Passports and visas, Penalties, Reporting and recordkeeping requirements, Unemployment, Wages, Working conditions.

■ Accordingly, 20 CFR Part 655 is amended by making the following technical correction:

PART 655—TEMPORARY EMPLOYMENT OF ALIENS IN THE UNITED STATES

Subpart H—Labor Condition Applications and Requirements for Employers Using Nonimmigrants on H–1B Visas in Specialty Occupations and as Fashion Models, and Labor Attestation Requirements for Employers Using Nonimmigrants on H–1B1 Visas in Specialty Occupations

■ 1. The authority citation for part 655, Subpart H continues to read as follows:

8 U.S.C. 1101(a)(15)(H)(i)(b) and (b)(1), 1182(n) and (t), and 1184(g) and (j); sec. 303(a)(8), Public Law 102–232, 105 Stat. 1733, 1748 (8 U.S.C. 1101 note); sec. 412(e), Public Law 105–277, 112 Stat. 2681; and 8 CFR 214.2(h).

■ 2. Amend § 655.731 by adding paragraph (a)(2)(ii)(C) to read as follows:

§ 655.731 What is the first LCA requirement, regarding wages?

(a) * * *

(2) * * *

(ii) * * *

(C) Another legitimate source of wage information. The employer may rely on other legitimate sources of wage data to obtain the prevailing wage. The other legitimate source survey must meet all the criteria set forth in paragraph (b)(3)(iii)(C) of this section. The employer will be required to demonstrate the legitimacy of the wage in the event of an investigation.

* * * * *

Signed in Washington, DC, this 28th day of August 2009.

Jane Oates,

Assistant Secretary, Employment and Training Administration.

[FR Doc. E9–21274 Filed 9–2–09; 8:45 am]

BILLING CODE 4510–FP–P

ENVIRONMENTAL PROTECTION AGENCY

40 CFR Part 52

[EPA–R06–OAR–2007–1064; FRL–8952–5]

Approval and Promulgation of Air Quality Implementation Plans; Louisiana; Emissions Inventory; Baton Rouge Ozone Nonattainment Area

AGENCY: Environmental Protection Agency (EPA).

ACTION: Direct final rule.

SUMMARY: The Environmental Protection Agency (EPA) is approving a revision to the Louisiana State Implementation Plan (SIP) to meet the Emissions Inventory (EI) requirements of the Clean Air Act (CAA) for the Baton Rouge ozone nonattainment area. EPA is approving the SIP revision because it satisfies the EI requirements for areas classified as nonattainment for the 1997 8-hour ozone national ambient air quality standard. EPA is approving the revisions pursuant to section 110 of the CAA.

DATES: This direct final rule will be effective November 2, 2009 without further notice unless EPA receives adverse comments by October 5, 2009. If adverse comments are received, EPA will publish a timely withdrawal of the direct final rule in the **Federal Register** informing the public that the rule will not take effect.

ADDRESSES: Submit your comments, identified by Docket No. EPA–R06–OAR–2007–1064, by one of the following methods:

- *Federal e-Rulemaking Portal: http://www.regulations.gov.*
- Follow the online instructions for submitting comments.
- *EPA Region 6 ''Contact Us'' Web site: http://epa.gov/region6/r6coment.htm.* Please click on ''6PD (Multimedia)'' and select ''Air'' before submitting comments.
- *E-mail:* Mr. Guy Donaldson at *donaldson.guy@epa.gov.* Please also send a copy by e-mail to the person listed in the **FOR FURTHER INFORMATION CONTACT** section below.
- *Fax:* Mr. Guy Donaldson, Chief, Air Planning Section (6PD–L), at fax number 214–665–7263.
- *Mail:* Mr. Guy Donaldson, Chief, Air Planning Section (6PD–L), Environmental Protection Agency, 1445 Ross Avenue, Suite 1200, Dallas, Texas 75202–2733.
- *Hand or Courier Delivery:* Mr. Guy Donaldson, Chief, Air Planning Section (6PD–L), Environmental Protection Agency, 1445 Ross Avenue, Suite 1200, Dallas, Texas 75202–2733. Such deliveries are accepted only between the hours of 8 a.m. and 4 p.m. weekdays, and not on legal holidays. Special arrangements should be made for deliveries of boxed information.

Instructions: Direct your comments to Docket No. EPA–R06–OAR–2007–1064. EPA's policy is that all comments received will be included in the public docket without change and may be made available online at *www.regulations.gov*, including any personal information provided, unless the comment includes information claimed to be Confidential Business Information (CBI) or other information whose disclosure is restricted by statute. Do not submit information that you consider to be CBI or otherwise protected through *www.regulations.gov* or e-mail. The *www.regulations.gov* Web site is an ''anonymous access'' system, which means EPA will not know your identity or contact information unless you provide it in the body of your comment. If you send an e-mail comment directly to EPA without going through *www.regulations.gov* your e-mail address will be automatically captured and included as part of the comment that is placed in the public docket and made available on the Internet. If you submit an electronic comment, EPA recommends that you include your name and other contact information in the body of your comment and with any disk or CD–ROM you submit. If EPA cannot read your comment due to technical difficulties and cannot contact you for clarification, EPA may not be able to consider your comment. Electronic files should avoid the use of special characters, any form of encryption, and be free of any defects or viruses.

Docket: All documents in the docket are listed in the *www.regulations.gov* index. Although listed in the index, some information is not publicly available, e.g., CBI or other information whose disclosure is restricted by statute. Certain other material, such as copyrighted material, will be publicly available only in hard copy. Publicly available docket materials are available either electronically in *www.regulations.gov* or in hard copy at the Air Planning Section (6PD–L), Environmental Protection Agency, 1445 Ross Avenue, Suite 700, Dallas, Texas 75202–2733. The file will be made available by appointment for public inspection in the Region 6 FOIA Review Room between the hours of 8:30 a.m. and 4:30 p.m. weekdays except for legal holidays. Contact the person listed in the **FOR FURTHER INFORMATION CONTACT** paragraph below or Mr. Bill Deese at

214–665–7253 to make an appointment. If possible, please make the appointment at least two working days in advance of your visit. There will be a 15 cent per page fee for making photocopies of documents. On the day of the visit, please check in at the EPA Region 6 reception area at 1445 Ross Avenue, Suite 700, Dallas, Texas.

The State submittal is also available for public inspection, during official business hours by appointment, at the Louisiana Department of Environmental Quality, Air Quality Assessment Division, 602 North Fifth Street, P.O. Box 4314, Baton Rouge, Louisiana 70821–4314.

FOR FURTHER INFORMATION CONTACT: Emad Shahin, Air Planning Section (6PD–L), Environmental Protection Agency, Region 6, 1445 Ross Avenue, Suite 700, Dallas, Texas 75202–2733, telephone 214–665–6717; fax number 214–665–7263; e-mail address *shahin.emad@epa.gov*.

SUPPLEMENTARY INFORMATION: Throughout this document, whenever ''we'', ''us'', or ''our'' is used, we mean the EPA.

Outline

I. What Action Is EPA Taking?
II. What Is a SIP?
III. What Is the Background for This Action?
IV. What Is EPA's Evaluation of the Revision?
V. Statutory and Executive Order Reviews

I. What Action Is EPA Taking?

We are approving a revision to the Louisiana SIP submitted by the State to meet the EI requirements of the CAA for the Baton Rouge 8-hour ozone nonattainment area. The Baton Rouge area EI was submitted to EPA on September 29, 2007 and entitled the ''2002 Base Year Emissions Inventory for the Baton Rouge Ozone Nonattainment Area''. We are approving the Baton Rouge area EI pursuant to section 110 of the CAA.

EPA is publishing this rule without prior proposal because we view this as a noncontroversial amendment and anticipate no relevant adverse comments. However, in the proposed rules section of this Federal Register publication, we are publishing a separate document that will serve as the proposal to approve the SIP revision if relevant adverse comments are received. This rule will be effective on November 2, 2009 without further notice unless we receive relevant adverse comment by October 5, 2009. If we receive relevant adverse comments, we will publish a timely withdrawal in the **Federal Register** informing the public that the rule will not take effect. We will address all public comments in a subsequent final rule based on the proposed rule. We will not institute a second comment period on this action. Any parties interested in commenting must do so now. Please note that if we receive adverse comment on an amendment, paragraph, or section of this rule and if that provision may be severed from the remainder of the rule, we may adopt as final those provisions of the rule that are not the subject of an adverse comment.

II. What Is a SIP?

Section 110 of the CAA requires states to develop air pollution regulations and control strategies to ensure that air quality meets the national ambient air quality standards (NAAQS) established by EPA. NAAQS are established under section 109 of the CAA, and currently address six criteria pollutants: Carbon monoxide, nitrogen dioxide, ozone, lead, particulate matter, and sulfur dioxide.

The SIP is a set of air pollution regulations, control strategies, other means or techniques, and technical analyses developed by the state, to ensure that the state meets the NAAQS. The SIP is required by section 110 and other provisions of the CAA. These SIPs can be extensive, containing state regulations or other enforceable documents and supporting information such as emissions inventories, monitoring networks, and modeling demonstrations. Each state must submit these regulations and control strategies to EPA for approval and incorporation into the federally-enforceable SIP. Each federally-approved SIP protects air quality primarily by addressing air pollution at its point of origin.

III. What Is the Background for This Action?

On July 18, 1997, EPA published the 8-hour ozone standard of 0.08 ppm (62 FR 38856). On April 30, 2004, EPA published designations for the 8-hour ozone standard (69 FR 23858). The Baton Rouge 8-hour ozone nonattainment area, consisting of the Parishes of Ascension, East Baton Rouge, Iberville, Livingston, and West Baton Rouge in Louisiana, was classified as a marginal nonattainment area with an attainment date of no later than June 15, 2007. The area did not attain the 8-hour ozone standard by June 15, 2007 and on March 21, 2008 was reclassified to a ''moderate'' 8-hour ozone nonattainment area (73 FR 15087).

The CAA (see section 182) and EPA's 8-hour ozone regulations (*see* 40 CFR 51.915) require a state to submit an emissions inventory for each area designated as nonattainment for the standard. An emissions inventory is an estimation of actual emissions of air pollutants in an area. The emissions inventory consists of volatile organic compound (VOC) and oxides of nitrogen (NOx) emissions as they are ''ozone precursors''. On September 29, 2007 the Louisiana Department of Environmental Quality submitted the ''2002 Base Year Emissions Inventory for the Baton Rouge Ozone Nonattainment Area'' to EPA.

IV. What Is EPA's Evaluation of the Revision?

EPA has reviewed the revision for consistency with the requirements of EPA regulations. A summary of EPA's analysis is provided below. For a full discussion of our evaluation, please refer to our Technical Support Document (TSD), found in the electronic docket.

Sections 172(c)(3) and 182(b)(1) of the CAA require that nonattainment plan provisions include an inventory of actual emissions from all sources of relevant pollutants in the nonattainment area. EPA strongly recommended using 2002 as the base year for the emissions inventory (40 CFR 51.915). EPA determined that LDEQ has developed an inventory of actual emissions from all sources in the Baton Rouge nonattainment area in accordance with EPA guidelines. The 2002 base year inventory includes all point, area, non-road mobile, and on-road mobile source emissions. Table 1 lists the 2002 EI for the Baton Rouge area. For more detail on how emissions inventories were estimated, *please see* the TSD. Since this SIP revision consists of just the 2002 Base Year inventory, it fully complies with section 110(l) of the CAA.

TABLE 1—BATON ROUGE 2002 BASE YEAR EMISSIONS INVENTORY (TPD)

Source category	VOC	NO_X	CO
Point	40.17	117.91	76.11
Non-Point	29.71	3.90	64.43

TABLE 1—BATON ROUGE 2002 BASE YEAR EMISSIONS INVENTORY (TPD)—Continued

Source category	VOC	NO_X	CO
On-Road	22.97	43.59	331.23
Non-Road	14.99	34.01	121.56
County Total	107.84	199.41	593.33

V. Statutory and Executive Order Reviews

Under the Clean Air Act, the Administrator is required to approve a SIP submission that complies with the provisions of the Act and applicable Federal regulations. 42 U.S.C. 7410(k); 40 CFR 52.02(a). Thus, in reviewing SIP submissions, EPA's role is to approve state choices, provided that they meet the criteria of the Clean Air Act. Accordingly, this action merely approves state law as meeting Federal requirements and does not impose additional requirements beyond those imposed by state law. For that reason, this action:

- Is not a ''significant regulatory action'' subject to review by the Office of Management and Budget under Executive Order 12866 (58 FR 51735, October 4, 1993);
- Does not impose an information collection burden under the provisions of the Paperwork Reduction Act (44 U.S.C. 3501 *et seq.*);
- Is certified as not having a significant economic impact on a substantial number of small entities under the Regulatory Flexibility Act (5 U.S.C. 601 *et seq.*);
- Does not contain any unfunded mandate or significantly or uniquely affect small governments, as described in the Unfunded Mandates Reform Act of 1995 (Pub. L. 104–4);
- Does not have Federalism implications as specified in Executive Order 13132 (64 FR 43255, August 10, 1999);
- Is not an economically significant regulatory action based on health or safety risks subject to Executive Order 13045 (62 FR 19885, April 23, 1997);
- Is not a significant regulatory action subject to Executive Order 13211 (66 FR 28355, May 22, 2001);
- Is not subject to requirements of Section 12(d) of the National Technology Transfer and Advancement Act of 1995 (15 U.S.C. 272 note) because application of those requirements would be inconsistent with the Clean Air Act; and
- Does not provide EPA with the discretionary authority to address, as appropriate, disproportionate human health or environmental effects, using practicable and legally permissible methods, under Executive Order 12898 (59 FR 7629, February 16, 1994).

In addition, this rule does not have tribal implications as specified by Executive Order 13175 (65 FR 67249, November 9, 2000), because the SIP is not approved to apply in Indian country located in the state, and EPA notes that it will not impose substantial direct costs on tribal governments or preempt tribal law.

The Congressional Review Act, 5 U.S.C. 801 *et seq.,* as added by the Small Business Regulatory Enforcement Fairness Act of 1996, generally provides that before a rule may take effect, the agency promulgating the rule must submit a rule report, which includes a copy of the rule, to each House of the Congress and to the Comptroller General of the United States. EPA will submit a report containing this action and other required information to the U.S. Senate, the U.S. House of Representatives, and the Comptroller General of the United States prior to publication of the rule in the **Federal Register**. A major rule cannot take effect until 60 days after it is published in the **Federal Register**. This action is not a ''major rule'' as defined by 5 U.S.C. 804(2).

Under section 307(b)(1) of the Clean Air Act, petitions for judicial review of this action must be filed in the United States Court of Appeals for the appropriate circuit by November 2, 2009. Filing a petition for reconsideration by the Administrator of this final rule does not affect the finality of this action for the purposes of judicial review nor does it extend the time within which a petition for judicial review may be filed, and shall not postpone the effectiveness of such rule or action. This action may not be challenged later in proceedings to enforce its requirements. (*See* section 307(b)(2).)

List of Subjects in 40 CFR Part 52

Environmental protection, Air pollution control, Incorporation by reference, Intergovernmental relations, Nitrogen oxides, Ozone, Volatile organic compounds.

Dated: August 21, 2009.

Lawrence E. Starfield,

Acting Regional Administrator, Region 6.

40 CFR part 52 is amended as follows:

PART 52—[AMENDED]

■ 1. The authority citation for part 52 continues to read as follows:

Authority: 42 U.S.C. 7401 *et seq.*

Subpart T—Louisiana

■ 2. The second table in § 52.970(e), entitled ''EPA Approved Louisiana Nonregulatory Provisions and Quasi-Regulatory Measures'' is amended by adding a new entry to the end of the table for ''2002 Emission Inventory'', for the Baton Rouge, LA area to read as follows:

§ 52.970 Identification of plan.

* * * * *

(e) * * *

* * * * *

EPA APPROVED LOUISIANA NONREGULATORY PROVISIONS AND QUASI-REGULATORY MEASURES

Name of SIP provision	Applicable geographic or non-attainment area	State approval/ submittal date	EPA approval date	Explanation
*	*	*	*	*
2002 Emission Inventory	Baton Rouge, LA	7/31/2007	9/3/2009, [Insert *FR* page number where document begins].	

[FR Doc. E9–21188 Filed 9–2–09; 8:45 am]
BILLING CODE 6560–50–P

DEPARTMENT OF COMMERCE

National Oceanic and Atmospheric Administration

50 CFR Part 679

[Docket No. 09100091344–9056–02]

RIN 0648–XR40

Fisheries of the Exclusive Economic Zone Off Alaska; Pollock in Statistical Area 610 in the Gulf of Alaska

AGENCY: National Marine Fisheries Service (NMFS), National Oceanic and Atmospheric Administration (NOAA), Commerce.

ACTION: Temporary rule; closure.

SUMMARY: NMFS is prohibiting directed fishing for pollock in Statistical Area 610 in the Gulf of Alaska (GOA). This action is necessary to prevent exceeding the C season allowance of the 2009 total allowable catch (TAC) of pollock for Statistical Area 610 in the GOA.

DATES: Effective 1200 hrs, Alaska local time (A.l.t.), August 31, 2009, through 1200 hrs, A.l.t., October 1, 2009.

FOR FURTHER INFORMATION CONTACT: Obren Davis, 907–586–7228.

SUPPLEMENTARY INFORMATION: NMFS manages the groundfish fishery in the GOA exclusive economic zone according to the Fishery Management Plan for Groundfish of the Gulf of Alaska (FMP) prepared by the North Pacific Fishery Management Council under authority of the Magnuson-Stevens Fishery Conservation and Management Act. Regulations governing fishing by U.S. vessels in accordance with the FMP appear at subpart H of 50 CFR part 600 and 50 CFR part 679.

The C season allowance of the 2009 TAC of pollock in Statistical Area 610 of the GOA is 4,391 metric tons (mt) as established by the final 2009 and 2010 harvest specifications for groundfish of the GOA (74 FR 7333, February 17, 2009). In accordance with § 679.20(a)(5)(iv)(B) the Administrator, Alaska Region, NMFS (Regional Administrator), hereby decreases the C season pollock allowance by 240 mt to reflect the total amount of pollock TAC that has been caught prior to the C season in Statistical Area 610. Therefore, the revised C season allowance of the pollock TAC in Statistical Area 610 is 4,151 mt (4,391 mt minus 240 mt).

In accordance with § 679.20(d)(1)(i), the Regional Administrator has determined that the C season allowance of the 2009 TAC of pollock in Statistical Area 610 of the GOA will soon be reached. Therefore, the Regional Administrator is establishing a directed fishing allowance of 4,141 mt, and is setting aside the remaining 10 mt as bycatch to support other anticipated groundfish fisheries. In accordance with § 679.20(d)(1)(iii), the Regional Administrator finds that this directed fishing allowance has been reached. Consequently, NMFS is prohibiting directed fishing for pollock in Statistical Area 610 of the GOA.

After the effective date of this closure the maximum retainable amounts at § 679.20(e) and (f) apply at any time during a trip.

Classification

This action responds to the best available information recently obtained from the fishery. The Assistant Administrator for Fisheries, NOAA (AA), finds good cause to waive the requirement to provide prior notice and opportunity for public comment pursuant to the authority set forth at 5 U.S.C. 553(b)(B) as such requirement is impracticable and contrary to the public interest. This requirement is impracticable and contrary to the public interest as it would prevent NMFS from responding to the most recent fisheries data in a timely fashion and would delay the closure of pollock in Statistical Area 610 of the GOA. NMFS was unable to publish a notice providing time for public comment because the most recent, relevant data only became available as of August 28, 2009.

The AA also finds good cause to waive the 30-day delay in the effective date of this action under 5 U.S.C. 553(d)(3). This finding is based upon the reasons provided above for waiver of prior notice and opportunity for public comment.

This action is required by § 679.20 and is exempt from review under Executive Order 12866.

Authority: 16 U.S.C. 1801 *et seq.*

Dated: August 31, 2009.

Alan D. Risenhoover,

Director, Office of Sustainable Fisheries, National Marine Fisheries Service.

[FR Doc. E9–21297 Filed 8–31–09; 4:15 pm]
BILLING CODE 3510–22–S

Proposed Rules

Federal Register
Vol. 74, No. 170
Thursday, September 3, 2009

This section of the FEDERAL REGISTER contains notices to the public of the proposed issuance of rules and regulations. The purpose of these notices is to give interested persons an opportunity to participate in the rule making prior to the adoption of the final rules.

DEPARTMENT OF AGRICULTURE

Agricultural Marketing Service

7 CFR Part 970

[Docket No. AO–FV–09–0138; AMS–FV–09–0029; FV09–970–1]

Leafy Green Vegetables Handled in the United States; Hearing on Proposed Marketing Agreement No. 970

AGENCY: Agricultural Marketing Service, USDA.

ACTION: Proposed rule; notice of public hearing.

SUMMARY: Notice is hereby given of a public hearing to consider a proposed marketing agreement under the Agricultural Marketing Agreement Act of 1937 to cover the handling of leafy green vegetables and products in the United States. The proposal was submitted by a cross-section of producer and handler representatives from the fresh produce industry, collectively referred to as the ''proponent group.'' The proposed agreement would authorize the development and implementation of production and handling regulations (metrics). Such metrics would reflect Good Agricultural Practices, Good Handling Practices, and Good Manufacturing Practices. The proposal would be voluntary in that only handlers who sign the marketing agreement would be subject to the requirements of the marketing agreement. Signatory handlers could only handle leafy green vegetables or product from the production area or imported that meets the requirements of the program. The program would be financed by assessments on first handlers of leafy green vegetables for the fresh market and would be administered by a twenty-three member committee, the majority of whom would be growers and handlers nominated by the industry and appointed by the Department of Agriculture (USDA).

DATES: The hearing dates are:

1. September 22 through 24, 2009, Monterey, California.
2. September 30 through October 1, 2009, Jacksonville, Florida.
3. October 6, 2009, Columbus, Ohio.
4. October 8, 2009, Denver, Colorado.
5. October 14 and 15, 2009, Yuma, Arizona.
6. October 20, 2009, in Syracuse, New York.
7. October 22, 2009, in Charlotte, North Carolina.

All hearing sessions are scheduled to begin at 8:30 a.m. and will conclude at 5 p.m., or any other time as determined by the presiding administrative law judge.

ADDRESSES: The hearing locations are:

1. Hyatt Regency Monterey, 1 Old Golf Course Road, Monterey, California, (831) 372–1234.

USDA will produce an on-demand video recording of the September 22–24, 2009, hearing sessions. The on-demand-video recordings will be available for viewing by interested parties beginning September 23, 2009, at *http://www.ams.usda.gov/moab.*

2. Wyndham Jacksonville Riverwalk, 1515 Prudential Drive, Jacksonville, Florida, (904) 396–5100.
3. Greater Columbus Convention Center, Room D130, 400 North High Street, Columbus, Ohio, (614) 827–2500.
4. Denver Airport Marriot at Gateway Park, 16455 East 40th Circle, Aurora, Colorado, (303) 371–4333.
5. Yuma Civic Center, Yuma Room, 1440 Desert Hills Drive, Yuma, Arizona, (928) 373–5040.
6. Renaissance Syracuse Hotel, 701 East Genesee Street, Syracuse, New York, (315) 479–7000.
7. Charlotte Marriott Executive Park, 5700 Westpark Drive, Charlotte, North Carolina, (704) 527–9650.

FOR FURTHER INFORMATION CONTACT: Antoinette Carter, Marketing Order Administration Branch, Fruit and Vegetable Programs, AMS, USDA, 1400 Independence Avenue, SW., Stop 0237, Washington, DC 20250–0237; Telephone: (202) 720–2491, Fax: (202) 720–8938, or E-mail: *Antoinette.Carter@ams.usda.gov;* or Melissa Schmaedick, Marketing Order Administration Branch, Fruit and Vegetable Programs, Northwest Marketing Field Office, AMS, USDA, 1220 SW Third Avenue, Room 385, Portland, OR 97204; Telephone: (503) 326–2724, Fax: (503) 326–7440, or E-mail: *Melissa.Schmaedick@ams.usda.gov.*

Small businesses may request information on this proceeding by contacting Jay Guerber, Marketing Order Administration Branch, Fruit and Vegetable Programs, AMS, USDA, 1400 Independence Avenue, SW., Stop 0237, Washington, DC 20250–0237; Telephone: (202) 720–2491, Fax: (202) 720–8938, or E-mail: *Jay.Guerber@ams.usda.gov.*

SUPPLEMENTARY INFORMATION: This administrative action is instituted pursuant to the Agricultural Marketing Agreement Act of 1937, as amended (7 U.S.C. 601–674), hereinafter referred to as the ''Act.'' The proposed marketing agreement is authorized under section 8(b) of the Act. This action is governed by the provisions of sections 556 and 557 of title 5 of the United States Code and, therefore, is excluded from the requirements of Executive Order 12866.

The Regulatory Flexibility Act (5 U.S.C. 601 *et seq.*) seeks to ensure that within the statutory authority of a program, the regulatory and informational requirements are tailored to the size and nature of small businesses. Interested persons are invited to present evidence at the hearing on the possible regulatory and informational impacts of the proposal on small businesses.

The marketing agreement proposed herein has been reviewed under Executive Order 12988, Civil Justice Reform. It is not intended to have retroactive effect.

The hearing is called pursuant to the provisions of the Act and the applicable rules of practice and procedure governing the formulation of marketing agreements and orders (7 CFR part 900).

Background

In mid-September 2006, the FDA issued the first public alerts of a multi-state *Escherichia coli* (*E. coli*) outbreak linked to fresh spinach grown in California's Salinas Valley. The resulting recall was the largest ever for leafy green products. Investigations by the FDA and the California Department of Health Services, in cooperation with the Centers for Disease Control and Prevention and USDA's Animal and Plant Health Inspection Service, concluded that the *E. coli* contamination might have been attributed to environmental factors in the production area.

In response to this outbreak, members of the California industry initiated the establishment of a State marketing agreement for handlers of leafy greens, which became effective February 10, 2007. Currently, signatory handlers under the California state program represent 99 percent of leafy green vegetable production volume in that state. In October 2007, a similar program was implemented in Arizona, which covers approximately 75 percent of leafy green vegetables produced in the state. While both the California and Arizona programs are voluntary, the requirements of these state agreements are mandatory for all signatories.

On October 4, 2007, USDA's Agricultural Marketing Service (AMS) published an Advance Notice of Proposed Rulemaking (ANPR) in the **Federal Register** (72 FR 56678) in response to industry interest in the establishment of a national marketing program to address the handling of fresh leafy green vegetables. Proposals and comments were sought from the public, particularly from growers, handlers, buyers, and sellers of leafy green commodities.

The ANPR resulted in the submission and consideration of 3,500 public comments on the need and level of support for a nationwide best practices program. These comments may be viewed at *http://www.regulations.gov/search/Regs/home.html#searchResults?Ne=11+8+8053+8098+8074+8066+8084+1&Ntt=AMS-FV-07-0090&Ntk=All&Ntx=mode+matchall&N=0.*

Proposed Marketing Agreement

On June 10, 2009, a petition for rulemaking requesting a public hearing on a proposed national marketing agreement for lettuce, spinach and other leafy greens was submitted to AMS. The proposal was submitted by a group of representatives (proponents) of a cross-section of producer and handler members of the fresh produce industry. The proponent group is comprised of: United Fresh Produce Association, Produce Marketing Association, Georgia Fresh Vegetable Association, Georgia Farm Bureau, Texas Fresh Vegetable Association, Arizona Farm Bureau, Leafy Greens Council, California Farm Bureau, California Leafy Greens Products Handler Marketing Agreement, Grower-Shipper Association of Central California, Western Growers, and the Imperial Valley Vegetable Growers Association. The proponents, whose membership includes both conventional and organic producers and handlers, claim to represent a majority of the volume of leafy green vegetables produced for the U.S. fresh market.

Proponents of the proposed program support the systematic application of good agricultural production, handling, and manufacturing under an auditable, science-based program. Proponents state that the proposed program is intended to minimize the potential for microbial contamination in production and handling systems, and would improve consumer confidence of fresh leafy green vegetables and their products in the marketplace.

Presently, there are no mandatory national food quality or safety requirements for the growing and handling of leafy green vegetables. Processing facilities, however, are subject to current good manufacturing practices as provided for in FDA Title 21, Part 110 of the Code of Federal Regulations.

USDA has quality grade standards for select leafy green vegetables (lettuce, endive, dandelion and cabbage), and offers voluntary quality related programs for fresh fruits and vegetables (Qualified Through Verification, Partners in Quality, Identity Preservation, and Domestic Origin Verification programs), as well as Good Agricultural and Good Handling Practices Audit Verification Programs.

Two FDA documents provide guidelines for the fresh produce industry and leafy green supply chain: Guide to Minimize Microbial Food Safety Hazards for Fresh Fruits and Vegetables, and Commodity Specific Food Safety Guidelines for Lettuce and Leafy Greens Supply Chain. Recently, a third FDA document was published as draft guidelines for leafy greens. All these documents may be viewed at *http://www.fda.gov.*

If the proposed national marketing agreement were implemented, the administrative committee, after consultation with the proposed Technical Review Board, would recommend audit metrics for USDA approval. These metrics would be science-based, scalable and regionally applicable in order to accommodate compliance of varying size and types of operations.

As a voluntary program, only signatory handlers to the proposed agreement would be regulated. Under the proposed agreement, signatory handlers could only handle leafy green vegetables from (1) producers within the production area who meet the requirements of the program, or (2) producers and handlers outside the production area who meet the requirements of the program. The production area is defined as the 50 states and the District of Columbia. Audits would be conducted by the USDA Inspection Service, and would include both domestic and imported product handled by signatory handlers.

The proposed program would be financed by assessments collected from first handlers on the volume of leafy green vegetables handled for the fresh market. Such assessments would include costs of domestic audit verification for first handlers and their producers. First handlers would also be responsible for fees for audit verification services provided for their imported leafy green vegetables or products. Secondary signatory handlers would be responsible for fees for audit verification services for leafy green vegetables or products handled by such handler.

The proponent group states that the proposed agreement has been discussed with leafy green vegetable growers, handlers, including those importing leafy greens, trade associations, and other industry stakeholders for more than a year. The proposal discussed herein has not received approval by the Secretary of Agriculture.

Testimony is invited at the hearing on the proposed marketing agreement and all of its provisions, as well as any appropriate modifications or alternatives.

The public hearing is held for the purpose of:

(a) Receiving evidence about the economic and marketing conditions that relate to the proposed agreement and to appropriate modifications thereof;

(b) Determining whether the handling of leafy green products within the production area is in the current of interstate commerce or directly burdens, obstructs, or affects interstate commerce and foreign commerce;

(c) Determining whether there is a need for a marketing agreement for leafy green vegetables;

(d) Determining the economic impact of the proposed agreement on the affected leafy green growers, handlers, other industry members and consumers; and,

(e) Determining whether the proposed agreement or any appropriate modification thereof would effectuate the declared policy of the Act.

All persons wishing to submit written material as evidence at the hearing should be prepared to submit four copies of such material at the hearing and should have prepared testimony available for presentation at the hearing. Where possible, all submitted written material should also be accompanied by an electronic copy in digital format. To the extent possible, all exhibits, including copies of prepared testimony, accepted into evidence during the hearing process will be available for

viewing by interested parties at *http://www.ams.usda.gov/moab.*

From the time the notice of hearing is issued and until the issuance of a Secretary's decision in this proceeding, USDA employees involved in the decisional process are prohibited from discussing the merits of the hearing issues on an ex-parte basis with any person having an interest in the proceeding. The prohibition applies to employees in the following organizational units: Office of the Secretary of Agriculture; Office of the Administrator, AMS; Office of the General Counsel; and the Fruit and Vegetable Programs, AMS.

Procedural matters are not subject to the above prohibition and may be discussed at any time.

Provisions of the proposed marketing agreement follow.

List of Subjects in Proposed 7 CFR Part 970

Marketing agreements, Reporting and recordkeeping requirements, Vegetables.

The marketing agreement proposed by the proponent group would add a new part 970 to read as follows:

PART 970—NATIONAL MARKETING AGREEMENT REGULATING LEAFY GREEN VEGETABLES

Subpart—Agreement Regulating Signatory Handlers

Definitions

Sec.
970.1 Act.
970.2 Audit verification.
970.3 Broker.
970.4 Critical limit.
970.5 Crop year.
970.6 Foodservice distributor.
970.7 Fresh-cut.
970.8 Fresh-cut, packaged leafy green product.
970.9 Good agricultural and handling practices.
970.10 Good manufacturing practices.
970.11 Handle.
970.12 Handler.
970.13 Importer.
970.14 Inspection Service.
970.15 Leafy green vegetables.
970.16 Manufacture.
970.17 Manufacturer.
970.18 Packaged.
970.19 Person.
970.20 Producer.
970.21 Process.
970.22 Process control.
970.23 Production area.
970.24 Retailer.
970.25 Secretary.
970.26 Signatory.
970.27 USDA.
970.28 Zone.

Purpose

970.35 Purpose

Leafy Green Vegetable Administrative Committee

970.40 Establishment and membership.
970.41 Eligibility.
970.42 Term of office.
970.43 Nominations.
970.44 Alternate members.
970.45 Technical Review Board.
970.46 Market Review Board.
970.47 Compensation and expenses.
970.48 Procedure.
970.49 Powers.
970.50 Duties.

Expenses and Assessments

970.55 Expenses.
970.56 Assessments.
970.57 Accounting.
970.58 Contributions.

Duties and Responsibilities of Signatories

970.65 Signatory parties.
970.66 Verification audits.
970.67 Audit metrics.
970.68 Traceability.
970.69 Official certification mark.
970.70 Administrative review.
970.71 Modification or suspension of regulations.
970.72 Exemptions.

Research and Promotion

970.75 Research and promotion.

Reports and Records

970.80 Reports and recordkeeping.
970.81 Confidential information.
970.82 Verification of reports.
970.83 Compliance.

Miscellaneous

970.85 Effective time.
970.86 Rights of the Secretary.
970.87 Personal liability.
970.88 Separability.
970.89 Derogation.
970.90 Duration of immunities.
970.91 Agents.
970.92 Suspension or termination.
970.93 Proceedings upon termination.
970.94 Effect of termination or amendment.
970.95 Amendments.
970.96 Counterparts.
970.97 Additional parties.
970.98 Withdrawal.

Authority: U.S.C. 601–674.

Definitions

§ 970.1 Act.

Act means Public Act No. 10, 73d Congress (May 12, 1933), as amended and as re-enacted and amended by the Agricultural Marketing Agreement Act of 1937, as amended (48 Stat. 31, as amended; 7 U.S.C. 601 *et seq.*).

§ 970.2 Audit verification.

Audit verification means the physical visit to the farm and/or facility when it is in operation by an Inspection Service audit team to verify and document that good agricultural, handling, and manufacturing practices are adhered to throughout the growing, harvesting, packing operation and transportation as defined in § 970.9, and § 970.10. This verification shall take the form of an official audit conducted by the Inspection Service, § 970.14. An audit verification is a snapshot in time based on documentation reviewed, persons interviewed and operations observed, and is intended to represent the past and ongoing activities of the auditee.

§ 970.3 Broker.

Broker means an individual or entity that coordinates the sale and transport of fresh leafy green vegetable retail or foodservice buyers without taking ownership of the product.

§ 970.4 Critical limit.

Critical limit means a maximum and/or minimum value established as part of a process control to which a biological, chemical, or a physical parameter must be controlled to prevent or minimize the occurrence of a food safety hazard to an acceptable level.

§ 970.5 Crop year.

Crop year is synonymous with *fiscal year* and means the 12-month period beginning with April 1 of any year and ending with March 31 of the following year.

§ 970.6 Foodservice distributor.

Foodservice distributor means an individual or entity that provides leafy green vegetables to restaurants, cafeterias, industrial caterers, hospitals and nursing homes.

§ 970.7 Fresh-cut.

Fresh-cut means fresh vegetables that have been altered from their natural form by cutting, dicing, peeling, slicing, chopping, shredding, coring, or trimming, with or without washing prior to being packaged for use by the consumer, foodservice industry, or a retail establishment. Fresh-cut products do not require additional preparation, processing, or cooking before human consumption.

§ 970.8 Fresh-cut, packaged leafy green product.

Fresh-cut, packaged leafy green product means any leafy green vegetable defined under § 970.15 that is fresh-cut and packaged for human consumption. This definition excludes from regulation all whole or cut non-leafy green vegetables or non-produce ingredients commingled with fresh-cut leafy green vegetables in packaged products (e.g. salad kits which may contain carrots, meat, cheese, and/or dressings).

§ 970.9 Good agricultural and handling practices.

Good agricultural practices (GAP) and good handling practices (GHP) refer to general practices to reduce microbial food safety hazards as outlined in the current U.S. Food and Drug Administration (FDA) ''Guide to Minimize Microbial Food Safety Hazards for Fresh Fruits and Vegetables'' guidance document and the current Association of Food and Drug Officials (AFDO) model codes for food safety at the farm and packinghouse, or any other revised or modified versions thereof, or any other FDA document approved as a replacement thereof and as approved by the Secretary.

§ 970.10 Good manufacturing practices.

Good manufacturing practices (GMP) means any FDA regulations (21 CFR part 110) that describe the methods, equipment, facilities, and controls required for producing processed food, including fresh-leafy green vegetable products or any other FDA regulation approved as a replacement or supplement thereof as approved by the Secretary.

§ 970.11 Handle.

Handle means to receive, acquire, sell, process, ship, distribute, or import leafy green vegetables, including both raw agricultural commodities and fresh cut, packaged products: *Provided,* that handle does not include brokering, retail or foodservice sales of leafy green vegetables.

§ 970.12 Handler.

Handler means any person who handles: *Provided,* that, this definition does not include a retailer, a foodservice distributor, or a broker, except to the extent that such a person is otherwise engaged in handling.

§ 970.13 Importer.

Importer means a handler who imports leafy green vegetables that are produced or handled outside of the production area.

§ 970.14 Inspection Service.

Inspection Service means the Fruit and Vegetable Programs, Agricultural Marketing Service, USDA, its designees, or any other entity approved by USDA to inspect/audit on its behalf.

§ 970.15 Leafy green vegetables.

Leafy greens means the fresh mature and immature leafy portions of any of the following: Arugula, cabbage (red, green and savoy), chard, cilantro, endive, escarole, kale, lettuce (iceberg, leaf, butter, head and romaine), parsley, raddichio, spinach, spring mix (baby leaf items including, but not limited to, cress, dandelion, endigia, mache, mizuna, tat soi, winter purslane) or any other leafy green vegetable recommended by the Committee and approved by the Secretary. The Committee may also recommend, subject to the approval of the Secretary, the removal of any leafy green vegetable from this definition.

§ 970.16 Manufacture.

Manufacture is synonymous with process and means to change fresh leafy green vegetables from their natural form into fresh-cut, packaged products: *Provided,* that manufacture does not apply to leafy green vegetables packed in the field or to a retailer or foodservice distributor except to the extent that such a person is otherwise engaged in manufacturing for non-retail purposes.

§ 970.17 Manufacturer.

Manufacturer means any person who manufactures: *Provided,* that, this definition does not include a retailer, a foodservice distributor, or a broker, except to the extent that such a person is otherwise engaged in handling.

§ 970.18 Packaged.

Packaged means a commodity or a unit of a product uniformly wrapped or sealed.

§ 970.19 Person.

Person means an individual, partnership, corporation, association, or any other business unit or legal entity.

§ 970.20 Producer.

Producer is synonymous with grower and means any person engaged in a proprietary capacity in the production of leafy green vegetables for sale or delivery to a signatory of this agreement.

§ 970.21 Process.

Process is synonymous with manufacture and means to change fresh leafy green vegetables from their natural form into fresh-cut, packaged products: *Provided,* that process does not apply to retailer or foodservice distributor except to the extent that such a person is otherwise engaged in processing for non-retail purposes.

§ 970.22 Process control.

Process control means an auditable step within a production, harvest, handling, manufacturing, or transportation process at which control can be applied and is essential to prevent or minimize a food safety hazard to an acceptable level.

§ 970.23 Production area.

Production area means all fifty states and the District of Columbia of the United States of America.

§ 970.24 Retailer.

Retailer means an individual or entity that sells leafy green vegetables direct to the consumer: *Provided,* that retailer does not include direct sales from a producer to a consumer.

§ 970.25 Secretary.

Secretary means the Secretary of Agriculture of the United States or any officer or employee of the United States Department of Agriculture who is, or who may hereafter be, authorized to act in his or her stead.

§ 970.26 Signatory.

Signatory means a handler who is party to this agreement.

§ 970.27 USDA.

USDA means the United States Department of Agriculture, including any officer, employee, service, program or branch of the Department of Agriculture, or any other person acting as the Secretary's agent or representative in connection with any provisions of this part.

§ 970.28 Zone.

Zone means the applicable one of the following described subdivisions of the production area or such other subdivision as recommended by the Committee and approved by the Secretary:

(a) *Zone 1* shall include the states of California, Washington, Oregon, Hawaii, and Alaska.

(b) *Zone 2* shall include the states of Arizona, Montana, North Dakota, Wyoming, South Dakota, Idaho, Nevada, and Utah.

(c) *Zone 3* shall include the states of New Mexico, Colorado, Nebraska, Minnesota, Iowa, Kansas, Oklahoma, Texas, Missouri, Arkansas, and Louisiana.

(d) *Zone 4* shall include the states of Wisconsin, Michigan, Ohio, Illinois, Indiana, Kentucky, Tennessee, Mississippi, Alabama, and Georgia.

(e) *Zone 5* shall include the states of Maine, New Hampshire, Vermont, New York, Connecticut, Massachusetts, Pennsylvania, New Jersey, West Virginia, Virginia, Maryland, Delaware, Rhode Island, North Carolina, South Carolina, Florida, and the District of Columbia.

Purpose

§ 970.35 Purpose

The purposes of this marketing agreement are: to provide a mechanism

to enable leafy green handlers to organize; to enhance the quality of fresh leafy green vegetable products available in the marketplace through the application of good agricultural production and handling practices; to implement a uniform, auditable, science-based food quality verification program; to provide for USDA validation and verification of program compliance; to foster greater collaboration with local, state and federal regulators; and, to improve consumer confidence in leafy green vegetables.

Leafy Green Vegetable Administrative Committee

§ 970.40 Establishment and membership.

A National Leafy Green Vegetable Administrative Committee (hereinafter referred to as Committee) is hereby established to administer the terms and provisions of this agreement.

(a) Such Committee shall consist of twenty-three members, each of whom shall have an alternate who shall have the same qualifications as the member for whom he or she is an alternate. Committee membership shall be allocated as follows:

(1) Four handlers and two producers from Zone 1;

(2) Three handlers and one producer from Zone 2;

(3) Two handlers and one producer from Zone 3;

(4) Two handlers and one producer from Zone 4;

(5) Two handlers and one producer from Zone 5;

(6) One retail representative from the production area;

(7) One foodservice representative from the production area;

(8) One public member from the production area; and,

(9) One importer from the production area.

(b) A majority of the producer members of the Committee shall not otherwise be engaged in the handling of leafy green vegetables or the manufacturing of fresh-cut, packaged leafy green products, and two producers must be small producers as defined in the rules and regulations. Furthermore, at least four handler members must be engaged in the manufacturing of fresh-cut leafy green products.

(c) The Secretary, upon recommendation of the Committee, may reapportion members among zones, may change the number of members and alternates, and may change the composition by changing the ratio of members, including their alternates. In recommending any such changes, the following shall be considered:

(1) Shifts in production within zones during recent years;

(2) The importance of new production in its relation to existing zones;

(3) The equitable relationship between membership and zones;

(4) Economies to result in promoting efficient administration due to rezoning or reapportionment of membership among the zones; and,

(5) Other relevant factors.

§ 970.41 Eligibility.

(a) Each producer or handler member of the Committee and their alternate member shall be, at the time of his or her selection and throughout his or her term of office, a producer or a handler, or an officer or employee of a producer or handler in the zone for which selected.

(b) All handler members and their alternates must be signatories.

(c) The retail, foodservice, and public members and their alternate members may not be engaged in the production or handling of leafy green vegetables. The retail and foodservice members and alternates shall be, at the time of their selection and throughout their term of office, an owner, officer or employee for the seat selected.

§ 970.42 Term of office.

Members and alternate members of the Committee shall serve for terms of two (2) years beginning on April 1 and ending on March 31. Each member and alternate member shall continue to serve until a successor is selected and has qualified. Members shall not serve more than three (3) consecutive two-year terms of office or for a total of six (6) consecutive years.

§ 970.43 Nominations.

Nomination of Committee members and alternates shall follow the procedure set forth in this section or as may be changed as recommended by the Committee and approved by the Secretary.

(a) *Initial members.* Nominations for each of the initial producer and handler members and alternate members of the Committee shall be conducted by the Secretary by means of meetings of producer and handler representatives, by mail, or by any other form of electronically verifiable communication. Once selected and appointed by the Secretary, the producer and handler members shall nominate the retail, foodservice, importer and public members and alternate members, subject to final selection and appointment by the Secretary.

(b) *Successor members.* Subsequent to the nomination and selection of the initial committee members and alternate members, nomination and selection of committee members and alternate members shall be pursuant to procedures recommended by the Committee and approved by the Secretary: *Provided,* that such procedures include the following:

(1) Only persons eligible to serve on the Committee shall be eligible to nominate and vote for committee members and alternate members;

(2) Committee producer and handler members and alternate members shall be nominated by zone;

(3) Each producer or handler shall have but one vote, and may vote in only one zone in which he or she is a producer or handler;

(4) All producer and handler member and alternate member nominations shall be certified by the Committee to the Secretary prior to the beginning of each two-year term of office, together with all necessary data and other information deemed by the Committee to be pertinent or requested by the Secretary. From these nominations, the Secretary shall select the producer and handler members and alternate members of the Committee; and

(5) The producer and handler members of the Committee shall nominate the retail, foodservice, importer and public members and alternate members.

(6) The Committee shall prescribe such additional qualifications, administrative rules and procedures for selection and voting for each candidate as it deems necessary and as the Secretary approves.

(c) *Acceptance.* Each person to be selected by the Secretary as a member or as an alternate member of the Committee shall, prior to such selection, qualify by advising the Secretary that if selected, such person agrees to serve in the position for which that nomination has been made.

(d) *Failure to nominate.* If nominations are not made within the time and manner specified in this part, the Secretary may, without regard to nominations, select the Committee members and alternate members on the basis of the representation provided for in § 970.40.

(e) *Vacancies.* To fill a vacancy on the Committee occasioned by the failure of any person selected as member or alternate member to qualify, or in the event of the death, removal, resignation, or disqualification of any member or alternate member, a successor for the unexpired term of such member or alternate member shall be nominated and selected in the manner specified in paragraphs (b) and (c) of this section. If

the names of nominees to fill any such vacancy are not made available to the Secretary within a reasonable time after such vacancy occurs, the Secretary may fill such vacancy without regard to nominations on the basis of representation provided for in § 970.40.

§ 970.44 Alternate members.

An alternate for a member shall act in the place and stead of such member during the member's absence, or in the event of the member's removal, resignation, disqualification or death, until a successor for such member's unexpired term has been selected and has qualified. In the event both a member and his/her alternate are unable to attend a meeting, the member or the Committee members of that group and zone present may designate any other alternate to serve in such member's place and stead.

§ 970.45 Technical Review Board.

A Technical Review Board is hereby established for the purpose of assisting the Committee in developing audit metrics in § 970.67 and any other function that the Committee may recommend and the Secretary approve. The Technical Review Board shall consist of 13 members as follows: 1 representative from each zone who is elected by the Committee producer and handler members from the corresponding zone; 1 produce food safety expert from a land grant university within each zone elected by the producer and handler members from the corresponding zone; 1 representative from USDA Natural Resources Conservation Service (NRCS) appointed by the Secretary; 1 representative of the US Environmental Protection Agency (EPA) designated by the Administrator, and 2 representatives from FDA designated by the Commissioner. The Technical Review Board may appoint subcommittees as necessary to facilitate input and review from regions throughout the production area. Subcommittees may consist of producers, handlers, and other interested parties as deemed appropriate by the Technical Review Board.

§ 970.46 Market Review Board.

A Market Review Board is hereby established for the purpose of providing advice to the Committee on retail, food service, and consumer issues that should be addressed to maximize consumer confidence through market acceptance and recognition of the program. The Market Review Board shall be appointed by the Committee and shall consist of 9 non-voting members as follows: 2 representatives of retail grocers; 2 representatives from food service companies; 3 consumers, and 2 representatives from land grant universities with expertise in fresh vegetable marketing, economics, or consumer acceptance. The Committee may additionally appoint representatives from consumer, retail, or foodservice organizations.

§ 970.47 Compensation and expenses.

All committee members, alternate members, and subcommittee members shall serve without compensation, but shall be reimbursed for necessary and reasonable expenses incurred in the performance of their duties under this part.

§ 970.48 Procedure.

(a) A majority of all the members of the Committee shall constitute a quorum: *Provided,* that each zone shall be represented by at least one member or his or her alternate at any meeting of the full Committee. Committee action shall require the concurrence of a majority of the members except that acceptance of Good Agricultural, Handling and Manufacturing Practices; assessment rates and termination of the agreement must be approved by a ⅔ majority of the Committee.

(b) In the event that a member of the Committee and alternate are unable to attend the meeting, the member or the Committee may designate any other alternate from the same zone or group (handler, producer) who is present at the meeting to serve in the member's place.

(c) The Committee shall give to the Secretary the same notice of each meeting that is given to the members of the Committee.

(d) The Committee may vote by telephone or other means of communication and any votes so cast shall be confirmed promptly in writing: *Provided,* that if an assembled meeting is held, all votes shall be cast in person. A videoconference shall be considered an assembled meeting and all votes shall be considered as cast in person.

§ 970.49 Powers.

The Committee shall have the following powers:

(a) To administer the agreement in accordance with its terms and provisions;

(b) To make such rules and regulations, with the approval of the Secretary, as may be necessary to effectuate the terms and provisions of the agreement;

(c) To adopt, with the approval of the Secretary after notice and comment, audit metrics to administer the terms and provisions in §§ 970.9, 970.10, 970.66, and 970.67;

(d) To collaborate with existing state boards, commissions and agreements through memorandum of understanding to affect the purposes of the agreement;

(e) To receive, investigate, and report to the Secretary complaints of violation of the provisions of the agreement; and,

(f) To recommend to the Secretary amendments to the agreement.

§ 970.50 Duties.

The Committee shall have, among others, the following duties:

(a) To act as intermediary between the Secretary and any signatory with respect to the operations of the agreement;

(b) To select from among its members a chairperson and such other officers as may be necessary, and to define the duties of such officers;

(c) To establish subcommittees and advisory boards to aid the Committee in the performance of its duties under the agreement;

(d) To adopt such bylaws for the conduct of its business as it may deem advisable;

(e) To keep minutes, books, and records which clearly reflect all the acts and transactions of the Committee and subcommittees, and these shall be subject to examination by the Secretary at any time;

(f) To appoint such employees or agents as it may deem necessary, and to determine the compensation and define the duties of each;

(g) To cause its financial statements to be audited by a certified public accountant at least once each crop year and at such other times as the Committee may deem necessary or as the Secretary may request. Such audit shall include an examination of the receipt of assessments and the disbursement of all funds. The Committee shall provide the Secretary with a copy of all audits and shall make copies of such audits, after the removal of any confidential information that may be contained in them, available for examination at the offices of the Committee;

(h) To investigate the production, handling and marketing of leafy green vegetables and to assemble data in connection therewith; and,

(i) To furnish such available information as may be deemed pertinent or as requested by the Secretary.

Expenses and Assessments

§ 970.55 Expenses.

The Committee is authorized to incur such expenses as the Secretary finds are reasonable and likely to be incurred by it during each crop year for the

maintenance and functioning of the Committee, including the payment of audit and inspection fees, and for such other purposes as the Secretary may, pursuant to the provisions of this part, determine to be appropriate. Such expenses shall be paid from assessments received pursuant to § 970.56 and other funds available to the Committee.

§ 970.56 Assessments.

(a) Each first handler shall pay to the Committee such handler's pro rata share of the Committee's expenses authorized by the Secretary for each crop year. The payment of assessments for the maintenance and functioning of the Committee, as described in § 970.55, Expenses, may be required under this part throughout the period it is in effect irrespective of whether particular provisions thereof are suspended or become inoperative.

(b) Based upon recommendation of the Committee, or other available data, the Secretary shall fix a base rate of assessment for all leafy green vegetables or products that first handlers shall pay during each crop year. The Committee may also recommend and the Secretary may approve supplemental assessments, but no combination of assessment and supplemental assessments may exceed the cap established in § 970.56(d).

(c) Any signatories who are not first handlers shall pay inspection service fees based on time and travel as approved by the Committee.

(d) Based on the recommendation of the Committee or other available data, the Secretary may change or modify the base rate classification defined in this section. The assessment shall be set at the lowest rate practical to carry out the objectives of the agreement. At no time shall the assessment rate exceed $0.05 per 24 pound carton or equivalent.

(e) Any assessment not paid by a handler within a period of time prescribed by the Committee may be subject to an interest or late payment charge, or both. The period of time, rate of interest and late payment charge shall be as recommended by the Committee and approved by the Secretary. Subsequent to such approval, all assessments not paid within the prescribed period of time shall be subject to an interest or late payment charge or both.

(f) In order to provide funds for the administration of this part, the Committee may accept but not require, advance payments of assessments, which shall be credited toward assessments levied against such handler during the crop year. The Committee may also borrow money for such purposes when assessment and reserve funds are not sufficient to cover them.

§ 970.57 Accounting.

(a) If, at the end of a crop year, the assessments collected are in excess of expenses incurred, the Committee, with the approval of the Secretary, may carry over such excess into subsequent crop years as an operating monetary reserve, except that funds already in such reserve shall not exceed approximately two (2) fiscal periods' budgeted expenses, or such lower limits as the Committee, with the approval of the Secretary, may establish. Funds in such reserve shall be available for use by the Committee for expenses authorized pursuant to § 970.55 and to cover necessary expenses of liquidation in the event of termination of this part. If any such excess is not retained in a reserve, each handler entitled to a proportionate refund shall be credited with such refund against the operations of the following crop year, or be paid such refund.

(b) Upon termination of this part, any refunds not required to defray the necessary expenses of liquidation shall be used, to the extent practicable, to fulfill any obligations under § 970.75, Research and promotion.

§ 970.58 Contributions.

The committee may accept voluntary contributions but these shall only be used to pay expenses incurred pursuant to § 970.75, Research and promotion. Furthermore, such contributions shall be free from any encumbrances by the donor and the committee shall retain complete control of their use.

Duties and Responsibilities of Signatories

§ 970.65 Signatory parties.

No signatory to this agreement shall handle leafy green vegetables for human consumption unless such are verified as meeting the provisions of this part. This verification shall take the form of an official audit conducted by the inspection service.

§ 970.66 Verification audits.

(a) *GAP audits.*

(1) Signatory handlers shall ensure that any leafy green vegetables handled by their operation have been subject to GAP validation and verification audits. Such audits shall verify that such product was produced under auditable conditions that meet production and harvest requirements as outlined in the GAPs (§ 970.9) and as further defined in any applicable audit metrics provided for under § 970.67.

(2) No signatory handlers subject to the provisions of this agreement shall receive leafy green vegetables produced in foreign countries that have not been subject to GAP validation and verification audits by USDA licensed inspectors. Such audits shall verify that such product was produced under auditable conditions that meet production and harvest requirements as outlined in the GAPs (§ 970.9) and as further defined in any applicable audit metrics provided for under § 970.67.

(b) *GHP or GMP audits.*

(1) All signatory handlers shall be subject to audit verifications. Such audits shall verify that such signatories operate under auditable conditions that meet requirements outlined in the GHPs or GMPs, (§ 970.9 and § 970.10) and as further defined in any applicable audit metrics provided for under § 970.67.

(2) No signatory handlers subject to the provisions of this agreement shall receive leafy green vegetables from handlers in foreign countries that have not been subject to GHP, GMP validation and verification audits by Inspection Service or the FDA. Such audits shall verify that such product was produced under auditable conditions that meet production and harvest requirements as outlined in the GAPs (§ 970.9) and as further defined in any applicable audit metrics provided for under § 970.67.

(c) All audits shall be conducted by the Inspection Service, and certified as to meeting the regulations of this part.

(d) Audits shall be conducted on a regular schedule that ensures every handler is audited during their corresponding production season. In addition, random unannounced audits of handlers and associated producers will also be performed during the production season in each zone.

§ 970.67 Audit metrics.

Audit metrics shall be recommended by the Committee to USDA for approval after consultation with the Technical Review Board.

(a) *GAP audit metrics.* GAP audit metrics shall include verification related but not limited to: Water quality, soil amendments, machine harvest, hand harvest (including direct contact with soil during harvest), transfer of human pathogens by field workers, field sanitation, equipment-facilitated cross contamination, flooding, water usage to prevent dehydration, and production location concerns, including climatic conditions and environment, and encroachment by animals of significant risk and urban settings, or any other factors defined under § 970.9, or as

recommended by the Committee and approved by the Secretary.

(b) *GHP or GMP audit metrics.* Such audit metrics shall include verification of process controls related but not limited to:

(1) *Post-harvest handling process:* Cooling, water, reuse of field containers, bulk-bin modified atmosphere process, condition and sanitation of transportation vehicles, and employee hygiene.

(2) *Handling and manufacturing process:* Wash water, wash system capacity, bulk-bin modified atmosphere process, condition and sanitation of transportation vehicles, and employee hygiene, labeling of Raw Agricultural Commodity (RAC) versus ready-to-eat (RTE) products, and finished product packaging.

(3) *Distribution handling process:* Condition and sanitation of transportation vehicles, condition and sanitation of distribution/cooler facilities, and temperature measurement of product.

(4) Any other factors defined under § 970.9 and § 970.10, or as recommended by the Committee and approved by the Secretary.

(c) Critical limits for process controls for each of the quality factors identified in the audit metrics shall be prescribed by USDA in consultation with FDA and any other federal or state regulatory body administering regulations impacted by the provisions of this agreement; shall incorporate Committee recommendations with regard to industry production, harvest and handling technologies; shall be based on sound scientific practices; and shall be approved by the Secretary.

(d) Audit metrics may be developed and recommended to accommodate differences in production and handling environments of different regions and different leafy green vegetable products.

(e) The committee may, at any time, recommend changes to the audit metrics after consultation with the Technical Review Board for approval by the Secretary.

(f) The Committee shall recommend, to the Secretary, for approval, a schedule for review of audit metrics such that audit metrics are reviewed a minimum of once every three years to ensure that they continually reflect the best industry practices, scientific information and industry knowledge.

§ 970.68 Traceability.

(a) The traceability of leafy green products subject to the terms of this agreement shall be established at all stages of production, processing, and distribution.

(b) Signatory handlers shall have the ability to track their products from their supplier(s) to their customer(s). To this end, signatory handlers shall have in place systems and procedures which allow for this information to be made available for verification by the Inspection Service.

(c) Documents necessary for verification shall be maintained for two years.

§ 970.69 Official certification mark.

(a) USDA will obtain and grant to the Committee the use of a U.S. registered certification mark that will be the agreement's official mark (mark). This mark will be licensed to signatories who comply with the terms of this agreement. Signatories shall use the mark in accordance with this section and shall use the mark consistent with the mark registration.

(b) The Committee may license signatories to affix the official certification mark to bills of lading or manifests, subject to the verification, suspension, revocation requirements, or any other such uses recommended by the Committee and approved by the Secretary to carry out the purposes of this Agreement. A signatory's compliance with the regulations under this Agreement is a condition precedent and subsequent to the signatory's entitlement to use the mark.

§ 970.70 Administrative review.

Any signatory denied the use of the official certification mark may request an administrative review if it is believed that a material fact of the original verification audit was misinterpreted. Administrative reviews would be conducted in accordance with the USDA audit verification procedures for any audit program in effect under this agreement. Any financially interested person may request an administrative review if it is believed that the original audit verification is in error. The person requesting the review would pay the cost of the review. The review results shall be issued to the person making the request.

§ 970.71 Modification or suspension of regulations.

(a) In the event that the Committee, at any time, finds that the provisions contained under this part should be modified or suspended, it shall by vote of a concurring majority of its members, so recommend to the Secretary.

(b) Whenever the Secretary finds from the recommendations and information submitted by the Committee or from other available information, that the provisions of this part should be modified, suspended, or terminated in order to effectuate the declared policy of the Act, the Secretary shall modify or suspend such provisions. If the Secretary finds that a regulation obstructs or does not tend to effectuate the declared policy of the Act, the Secretary shall suspend or terminate such regulation.

(c) The Committee, with the approval of the Secretary, may issue rules and regulations implementing this part.

§ 970.72 Exemptions.

The Committee, with the approval of the Secretary, may establish such rules, regulations, and safeguards that exempt from any or all requirements pursuant to this part such quantities of leafy green vegetables or products as do not interfere with the objectives of this part, and shall require such reports, certifications, or other conditions as are necessary to ensure that such leafy green vegetables are handled or used only as authorized.

Research and Promotion

§ 970.75 Research and promotion.

The Committee, with the approval of the Secretary, may establish or provide for the establishment of marketing research, and development projects, and/or promotional activities, including paid advertising, designed to assist, improve, or promote the efficient adoption, implementation, and marketplace acceptance of the agreement and of leafy green vegetables or products handled by signatory members. The expenses of such projects shall be budgeted and paid from funds collected pursuant to § 970.56.

Reports and Records

§ 970.80 Reports and recordkeeping.

(a) Each handler shall report acquisitions of all leafy green vegetables or products and such other reports or information as may be necessary to enable the Committee to carry out the provisions of this part.

(b) Each handler shall maintain records of all receipts and acquisitions of leafy green vegetables or products, and all documentation relating to the verification audit reports. Such records shall be maintained for at least two years after the crop year of their applicability. Such recordkeeping shall be sufficient to document and substantiate the handler compliance with this part.

(c) The Committee shall maintain copies of audit reports.

§ 970.81 Confidential information.

All reports and records furnished or submitted by handlers to the Committee

which include data or proprietary information constituting a trade secret, or disclosing a trade position, financial condition, or business operations of the particular handlers or their customers, shall be received by, and at all times kept in the custody and control of, one or more employees of the Committee, who shall disclose such data and information to no person except the Secretary. However, such data or information may be disclosed only with the approval of the Secretary, to the Committee, when reasonably necessary to enable the Committee to carry out its functions under this part.

§ 970.82 Verification of reports.

For the purpose of checking and verifying reports filed by signatories, authorized agents or employees of the Committee, and the Secretary shall have access to any premises of any signatory at any time during reasonable business hours to verify compliance with the requirements of the agreement. For the purpose of checking and verifying GAP compliance, authorized agents or employees of the Committee and the Secretary shall have access to audit verification records.

§ 970.83 Compliance.

Compliance with the provisions of this agreement will be overseen by the Committee and any staff hired or appointed to undertake this responsibility. In conjunction with USDA, the Committee shall establish a policy for signatory handlers for non-conformities identified through verification audits:

(a) A signatory shall be subject to withdrawal of audit services, shall lose the privilege of the use of the official certification mark, and may be subject to misbranding or trademark violations, if the signatory:

(1) Produces or acquires leafy green vegetables or products without an inspection service verification audit, pursuant to § 970.9 and § 970.10.

(2) Fails to obtain audit verification on the production, handling or manufacturing of leafy green vegetable or products, pursuant to § 970.66, and ships such vegetables or products for human consumption;

(3) Ships or places into the current of commerce leafy green vegetables or products that fail to meet requirements under this agreement, pursuant to § 970.66 and § 970.67, for human consumption;

(4) Commingles leafy green vegetables that fail to meet the requirements of this agreement with leafy green vegetables verified to meet the requirements of the agreement and ships the commingled lot for human consumption;

(5) Fails to maintain and provide access to records, pursuant to § 970.80; or

(6) Otherwise violates any provision of this part.

(b) Any lot or portion thereof of leafy green vegetables which is deemed an immediate threat to public health by Inspection Service staff during the course of a verification audit shall be reported by USDA to FDA

(c) Failure to comply with the provisions of this agreement may also result in additional remedies or penalties, such as injunctive relief, as authorized under the Act.

Miscellaneous

§ 970.85 Effective time.

The provisions of this part, as well as any amendments, shall apply to 2010–2011 and subsequent crop year leafy green vegetables and shall continue in force and effect until modified, suspended, or terminated.

§ 970.86 Rights of the Secretary.

Members and alternates of the Committee, subcommittees, advisory boards, and any agents, employees, or representatives thereof, shall be subject to removal or suspension by the Secretary at any time. Each and every decision, determination, and other act of the Committee shall be subject to the continuing right of the disapproval by the Secretary at any time. Upon such disapproval, the disapproved action of the Committee shall be deemed null and void.

§ 970.87 Personal liability.

No member or alternate member of the Committee, and no employee or agent of the Committee, shall be held personally responsible, either individually or jointly with others, in any way whatsoever, to any person for errors in judgment, mistakes, or other acts, either of commission or omission, as such member, alternate, employee, or agent, except for acts of dishonesty, willful misconduct, or gross negligence.

§ 970.88 Separability.

If any provision of this part is declared invalid or the applicability thereof to any person, circumstance, or thing is held invalid, the validity of the remainder of this part or the applicability thereof to any other person, circumstance, or thing shall not be affected thereby.

§ 970.89 Derogation.

Nothing contained in this part is, or shall be construed to be, in derogation or in modification of the rights of the Secretary or of the United States (a) to exercise any powers granted by the Act or otherwise, or (b) in accordance with such powers, to act in the premises whenever such action is deemed advisable.

§ 970.90 Duration of immunities.

The benefits, privileges, and immunities conferred upon any person by virtue of this part shall cease upon its termination, except with respect to acts done under and during the existence of this part.

§ 970.91 Agents.

The Secretary may, by designation in writing, name any officer or employee of the United States, or name any agency or division in the USDA, to act as the Secretary's agent or representative in connection with any of the provisions of this part.

§ 970.92 Suspension or termination.

(a) The Secretary may at any time terminate the provisions of this part.

(b) The Secretary shall terminate or suspend the operations of any or all of the provisions of this part whenever it is found that such provisions do not tend to effectuate the declared policy of the Act.

(c) The provisions of this part shall, in any event, terminate whenever the provisions of the Act authorizing them cease.

§ 970.93 Proceedings upon termination.

Upon the termination of this part, the members of the Committee then functioning shall continue as joint trustees, for the purpose of liquidating the affairs of the Committee. Action by such trustees shall require the concurrence of a majority of said trustees. Such trustees shall continue in such capacity until discharged by the Secretary, and shall account for all receipts and disbursements and deliver all property on hand, together with all books and records of the Committee and the joint trustees, to such persons as the Secretary may direct; and shall upon the request of the Secretary, execute such assignments or other instruments necessary or appropriate to vest in such person full title and right to all the funds, properties, and claims vested in the Committee or the joint trustees, pursuant to this part. Any person to whom funds, property, or claims have been transferred or delivered by the Committee or the joint trustees, pursuant to this section, shall be subject to the same obligations imposed upon the members of said Committee and upon said joint trustees.

§ 970.94 Effect of termination or amendment.

Unless otherwise expressly provided by the Secretary, the termination of this part or any regulation issued pursuant thereto, or the issuance of any amendment to either thereof, shall not:

(a) Affect or waive any right, duty, obligation, or liability which shall have arisen or which may thereafter arise, in connection with any provisions of this part or any regulation issued thereunder;

(b) Release or extinguish any violation of this part or any regulation issued; or

(c) Affect or impair any rights or remedies of the Secretary, or of any other persons, with respect to such violation.

§ 970.95 Amendments.

Amendments to this part may be proposed from time to time by the Committee, or by any interested person affected by its provisions, including the Secretary.

§ 970.96 Counterparts.

This agreement may be executed in multiple counterparts and, when one counterpart is signed by the Secretary, all such counterparts shall constitute, when taken together, one and the same instrument as if all signatures were contained in one original.

§ 970.97 Additional parties.

After the effective date of the agreement, any non-signatory handler may become a party hereto if a counterpart is executed by him or her and delivered to the Secretary. This agreement shall take effect as to such new contracting party at the time such counterpart is delivered to the Secretary. The obligations, benefits, privileges, and immunities conferred by this agreement shall then be effective as to such new contracting party.

§ 970.98 Withdrawal.

Release from this agreement may be obtained, provided that a signatory handler is not in violation of the provisions of this agreement and has fulfilled all of his or her obligations, including payment of any assessments or charges levied pursuant to this agreement, under any of the following conditions:

(a) A signatory handler may file with the Committee a written request for withdrawal at the close of a crop year, effective for the succeeding crop year.

(b) Immediate withdrawal may be effectuated when a signatory handler ceases to be a handler of leafy green vegetables or products and gives notice thereof to the Committee in writing.

Dated: August 31, 2009.

Rayne Pegg,

Administrator, Agricultural Marketing Service.

[FR Doc. E9–21295 Filed 9–2–09; 8:45 am]

BILLING CODE P

DEPARTMENT OF TRANSPORTATION

Federal Aviation Administration

14 CFR Part 71

[Docket No. FAA–2009–0677; Airspace Docket No. 09–AGL–17]

Proposed Amendment of Class E Airspace; Mankato, MN

AGENCY: Federal Aviation Administration (FAA), DOT.

ACTION: Notice of proposed rulemaking (NPRM).

SUMMARY: This action proposes to amend Class E airspace at Mankato, MN. Additional controlled airspace is necessary to accommodate new Standard Instrument Approach Procedures (SIAPs) at Mankato Regional Airport, Mankato, MN. The FAA is taking this action to enhance the safety and management of Instrument Flight Rules (IFR) operations for SIAPs at Mankato Regional Airport.

DATES: Comments must be received on or before October 19, 2009.

ADDRESSES: Send comments on this proposal to the U.S. Department of Transportation, Docket Operations, 1200 New Jersey Avenue SE., West Building Ground Floor, Room W12–140, Washington, DC 20590–0001. You must identify the docket number FAA–2009–0677/Airspace Docket No. 09–AGL–17, at the beginning of your comments. You may also submit comments through the Internet at *http://www.regulations.gov*. You may review the public docket containing the proposal, any comments received, and any final disposition in person in the Dockets Office between 9 a.m. and 5 p.m., Monday through Friday, except Federal holidays. The Docket Office (telephone 1–800–647–5527), is on the ground floor of the building at the above address.

FOR FURTHER INFORMATION CONTACT: Scott Enander, Central Service Center, Operations Support Group, Federal Aviation Administration, Southwest Region, 2601 Meacham Blvd., Fort Worth, TX 76137; telephone: (817) 321–7716.

SUPPLEMENTARY INFORMATION:

Comments Invited

Interested parties are invited to participate in this proposed rulemaking by submitting such written data, views, or arguments, as they may desire. Comments that provide the factual basis supporting the views and suggestions presented are particularly helpful in developing reasoned regulatory decisions on the proposal. Comments are specifically invited on the overall regulatory, aeronautical, economic, environmental, and energy-related aspects of the proposal. Communications should identify both docket numbers and be submitted in triplicate to the address listed above. Commenters wishing the FAA to acknowledge receipt of their comments on this notice must submit with those comments a self-addressed, stamped postcard on which the following statement is made: ''Comments to Docket No. FAA–2009–0677/Airspace Docket No. 09–AGL–17.'' The postcard will be date/time stamped and returned to the commenter.

Availability of NPRMs

An electronic copy of this document may be downloaded through the Internet at *http://www.regulations.gov*. Recently published rulemaking documents can also be accessed through the FAA's Web page at *http://www.faa.gov/airports_airtraffic/air_traffic/publications/airspace_amendments/*.

Additionally, any person may obtain a copy of this notice by submitting a request to the Federal Aviation Administration (FAA), Office of Air Traffic Airspace Management, ATA–400, 800 Independence Avenue, SW., Washington, DC 20591, or by calling (202) 267–8783. Communications must identify both docket numbers for this notice. Persons interested in being placed on a mailing list for future NPRMs should contact the FAA's Office of Rulemaking (202) 267–9677, to request a copy of Advisory Circular No. 11–2A, Notice of Proposed Rulemaking Distribution System, which describes the application procedure.

The Proposal

This action proposes to amend Title 14, Code of Federal Regulations (14 CFR) part 71 by adding additional Class E airspace extending upward from 700 feet above the surface for SIAPs operations at Mankato Regional Airport, Mankato, MN. Controlled airspace is needed for the safety and management of IFR operations at the airport.

Class E airspace areas are published in Paragraphs 6002 and 6005 of FAA

Order 7400.9S, dated October 3, 2008, and effective October 31, 2008, which is incorporated by reference in 14 CFR 71.1. The Class E airspace designation listed in this document would be published subsequently in the Order.

The FAA has determined that this proposed regulation only involves an established body of technical regulations for which frequent and routine amendments are necessary to keep them operationally current. It, therefore, (1) is not a ''significant regulatory action'' under Executive Order 12866; (2) is not a ''significant rule'' under DOT Regulatory Policies and Procedures (44 FR 11034; February 26, 1979); and (3) does not warrant preparation of a Regulatory Evaluation as the anticipated impact is so minimal. Since this is a routine matter that will only affect air traffic procedures and air navigation, it is certified that this rule, when promulgated, will not have a significant economic impact on a substantial number of small entities under the criteria of the Regulatory Flexibility Act.

The FAA's authority to issue rules regarding aviation safety is found in Title 49 of the U.S. Code. Subtitle 1, Section 106 describes the authority of the FAA Administrator. Subtitle VII, Aviation Programs, describes in more detail the scope of the agency's authority. This rulemaking is promulgated under the authority described in Subtitle VII, Part A, Subpart I, Section 40103. Under that section, the FAA is charged with prescribing regulations to assign the use of airspace necessary to ensure the safety of aircraft and the efficient use of airspace. This regulation is within the scope of that authority as it would add additional controlled airspace at Mankato Regional Airport, Mankato, MN.

List of Subjects in 14 CFR Part 71

Airspace, Incorporation by reference, Navigation (Air).

The Proposed Amendment

In consideration of the foregoing, the Federal Aviation Administration proposes to amend 14 CFR part 71 as follows:

PART 71—DESIGNATION OF CLASS A, B, C, D, AND E AIRSPACE AREAS; AIR TRAFFIC SERVICE ROUTES; AND REPORTING POINTS

1. The authority citation for part 71 continues to read as follows:

Authority: 49 U.S.C. 106(g); 40103, 40113, 40120; E.O. 10854, 24 FR 9565, 3 CFR, 1959–1963 Comp., p. 389.

§ 71.1 [Amended]

2. The incorporation by reference in 14 CFR 71.1 of FAA Order 7400.9S, Airspace Designations and Reporting Points, dated October 3, 2008, and effective October 31, 2008, is amended as follows:

Paragraph 6002 Class E Airspace designated as surface areas.

* * * * *

AGL MN E2 Mankato, MN [Amended]

Mankato Regional Airport, MN
(Lat. 44°13′22″ N., long. 93°55′10″ W.)
Mankato VOR/DME
(Lat. 44°13′12″ N., long. 93°54′45″ W.)

Within a 4.2-mile radius of Mankato Regional Airport and within 1.8 miles each side of the Mankato VOR/DME 167° radial extending from the 4.2-mile radius to 7 miles south of the VOR/DME; and within 2.7 miles each side of the Mankato VOR/DME 326° radial extending from the 4.2-mile radius to 7 miles northwest of the VOR/DME. This Class E airspace is effective during the specific dates and times established in advance by a Notice to Airmen. The effective date and time will thereafter be continuously published in the Airport/Facility Directory.

* * * * *

Paragraph 6005 Class E Airspace areas extending upward from 700 feet or more above the surface of the earth.

* * * * *

AGL MN E5 Mankato, MN [Amended]

Mankato Regional Airport, MN
(Lat. 44°13′22″ N., long. 93°55′10″ W.)
Immanuel-St. Joseph's Hospital, MN
Point In Space Coordinates
(Lat. 44°09′48″ N., long. 93°57′40″ W)

That airspace extending upward from 700 feet above the surface within a 7-mile radius of Mankato Regional Airport, and within 2 miles each side of the 047° bearing from the airport extending from the 7-mile radius to 8 miles northeast of the airport; and within 4 miles each side of the 020° bearing from the airport extending from the 7-mile radius to 11 miles north of the airport; and within a 6-mile radius of the point in space serving Immanuel-St. Joseph's Hospital.

* * * * *

Issued in Fort Worth, TX, on August 25, 2009.

Ronnie L. Uhlenhaker,

Acting Manager, Operations Support Group, ATO Central Service Center.

[FR Doc. E9–21266 Filed 9–2–09; 8:45 am]

BILLING CODE 4901–13–P

DEPARTMENT OF TRANSPORTATION

Federal Aviation Administration

14 CFR Part 71

[Docket No. FAA–2009–0696; Airspace Docket No. 09–AGL–18]

Proposed Amendment of Class E Airspace; West Branch, MI

AGENCY: Federal Aviation Administration (FAA), DOT.

ACTION: Notice of proposed rulemaking (NPRM).

SUMMARY: This action proposes to amend Class E airspace at West Branch, MI. Additional controlled airspace is necessary to accommodate new Standard Instrument Approach Procedures (SIAPs) at West Branch Community Airport, West Branch, MI. The FAA is taking this action to enhance the safety and management of Instrument Flight Rules (IFR) operations for SIAPs at West Branch Community Airport.

DATES: Comments must be received on or before October 19, 2009.

ADDRESSES: Send comments on this proposal to the U.S. Department of Transportation, Docket Operations, 1200 New Jersey Avenue, SE., West Building Ground Floor, Room W12–140, Washington, DC 20590–0001. You must identify the docket number FAA–2009–0696/Airspace Docket No. 09–AGL–18, at the beginning of your comments. You may also submit comments through the Internet at *http://www.regulations.gov*. You may review the public docket containing the proposal, any comments received, and any final disposition in person in the Dockets Office between 9 a.m. and 5 p.m., Monday through Friday, except Federal holidays. The Docket Office (telephone 1–800–647–5527), is on the ground floor of the building at the above address.

FOR FURTHER INFORMATION CONTACT: Scott Enander, Central Service Center, Operations Support Group, Federal Aviation Administration, Southwest Region, 2601 Meacham Blvd., Fort Worth, TX 76137; telephone: (817) 321–7716.

SUPPLEMENTARY INFORMATION:

Comments Invited

Interested parties are invited to participate in this proposed rulemaking by submitting such written data, views, or arguments, as they may desire. Comments that provide the factual basis supporting the views and suggestions presented are particularly helpful in developing reasoned regulatory

decisions on the proposal. Comments are specifically invited on the overall regulatory, aeronautical, economic, environmental, and energy-related aspects of the proposal. Communications should identify both docket numbers and be submitted in triplicate to the address listed above. Commenters wishing the FAA to acknowledge receipt of their comments on this notice must submit with those comments a self-addressed, stamped postcard on which the following statement is made: ''Comments to Docket No. FAA–2009–0696/Airspace Docket No. 09–AGL–18.'' The postcard will be date/time stamped and returned to the commenter.

Availability of NPRMs

An electronic copy of this document may be downloaded through the Internet at *http://www.regulations.gov*. Recently published rulemaking documents can also be accessed through the FAA's Web page at *http://www.faa.gov/airports_airtraffic/air_traffic/publications/airspace_amendments/*.

Additionally, any person may obtain a copy of this notice by submitting a request to the Federal Aviation Administration (FAA), Office of Air Traffic Airspace Management, ATA–400, 800 Independence Avenue, SW., Washington, DC 20591, or by calling (202) 267–8783. Communications must identify both docket numbers for this notice. Persons interested in being placed on a mailing list for future NPRMs should contact the FAA's Office of Rulemaking (202) 267–9677, to request a copy of Advisory Circular No. 11–2A, Notice of Proposed Rulemaking Distribution System, which describes the application procedure.

The Proposal

This action proposes to amend Title 14, Code of Federal Regulations (14 CFR), Part 71 by adding additional Class E airspace extending upward from 700 feet above the surface for SIAPs operations at West Branch Community Airport, West Branch, MI. Controlled airspace is needed for the safety and management of IFR operations at the airport.

Class E airspace areas are published in Paragraph 6005 of FAA Order 7400.9S, dated October 3, 2008, and effective October 31, 2008, which is incorporated by reference in 14 CFR 71.1. The Class E airspace designation listed in this document would be published subsequently in the Order.

The FAA has determined that this proposed regulation only involves an established body of technical regulations for which frequent and routine amendments are necessary to keep them operationally current. It, therefore, (1) Is not a ''significant regulatory action'' under Executive Order 12866; (2) is not a ''significant rule'' under DOT Regulatory Policies and Procedures (44 FR 11034; February 26, 1979); and (3) does not warrant preparation of a Regulatory Evaluation as the anticipated impact is so minimal. Since this is a routine matter that will only affect air traffic procedures and air navigation, it is certified that this rule, when promulgated, will not have a significant economic impact on a substantial number of small entities under the criteria of the Regulatory Flexibility Act.

The FAA's authority to issue rules regarding aviation safety is found in Title 49 of the U.S. Code. Subtitle 1, Section 106 describes the authority of the FAA Administrator. Subtitle VII, Aviation Programs, describes in more detail the scope of the agency's authority. This rulemaking is promulgated under the authority described in Subtitle VII, Part A, Subpart I, Section 40103. Under that section, the FAA is charged with prescribing regulations to assign the use of airspace necessary to ensure the safety of aircraft and the efficient use of airspace. This regulation is within the scope of that authority as it would add additional controlled airspace at West Branch Community Airport, West Branch, MI.

List of Subjects in 14 CFR Part 71

Airspace, Incorporation by reference, Navigation (Air).

The Proposed Amendment

In consideration of the foregoing, the Federal Aviation Administration proposes to amend 14 CFR part 71 as follows:

PART 71—DESIGNATION OF CLASS A, B, C, D, AND E AIRSPACE AREAS; AIR TRAFFIC SERVICE ROUTES; AND REPORTING POINTS

1. The authority citation for part 71 continues to read as follows:

Authority: 49 U.S.C. 106(g); 40103, 40113, 40120; E.O. 10854, 24 FR 9565, 3 CFR, 1959–1963 Comp., p. 389.

§ 71.1 [Amended]

2. The incorporation by reference in 14 CFR 71.1 of FAA Order 7400.9S, Airspace Designations and Reporting Points, dated October 3, 2008, and effective October 31, 2008, is amended as follows:

Paragraph 6005 Class E Airspace areas extending upward from 700 feet or more above the surface of the earth.

* * * * *

AGL MI E5 West Branch, MI [Amended]

West Branch Community Airport, MI
(Lat. 44°14′41″ N., long. 84°10′47″ W.)

That airspace extending upward from 700 feet above the surface within a 7-mile radius of West Branch Community Airport and within 2.7 miles each side of the 086° bearing from the airport extending from the 7-mile radius to 11.4 miles east of the airport; and within 4 miles each side of the 269° bearing from the airport extending from the 7-mile radius to 11.5 miles west of the airport.

* * * * *

Issued in Fort Worth, TX, on August 25, 2009.

Ronnie L. Uhlenhaker,

Acting Manager, Operations Support Group, ATO Central Service Center.

[FR Doc. E9–21265 Filed 9–2–09; 8:45 am]

BILLING CODE 4901–13–P

DEPARTMENT OF ENERGY

Federal Energy Regulatory Commission

18 CFR Part 284

[128 FERC ¶61,187; Docket No. RM09–2–000]

Contract Reporting Requirements of Intrastate Natural Gas Companies; Notice Requesting Comments on Proposed Standardized Electronic Information Collection and Extending Time for Comments on Notice of Proposed Rulemaking

August 26, 2009.

AGENCY: Federal Energy Regulatory Commission, Energy.

ACTION: Notice of proposed standardized electronic information collection and request for comments.

SUMMARY: In compliance with the requirements of Section 3506(c)(2)(A) of the Paperwork Reduction Act of 1995, 44 U.S.C. 3506(c)(2)(A) (2006), the Federal Energy Regulatory Commission (FERC or Commission) is soliciting public comment on the proposed standardized electronic information collection to be used by Natural Gas Policy Act (NGPA) section 311 and Hinshaw pipelines for submitting the quarterly transactional reports proposed in the Notice of Proposed Rulemaking, issued on July 16, 2009 and published on July 29, 2009 (74 FR 37658) in this docket. This notice also extends the deadline for comments on the Notice of Proposed Rulemaking, so that all comments will be due on the same date.

DATES: Comments on the proposed standardized electronic information collection are due November 2, 2009.

Comments on the Notice of Proposed Rulemaking published on July 29, 2009 (74 FR 37658) are now also due November 2, 2009.

ADDRESSES: Comments may be filed either electronically (eFiled) or in paper format, and should refer to Docket No. RM09–2–000. Documents must be prepared in an acceptable filing format and in compliance with Commission submission guidelines at *http://www.ferc.gov/help/submission-guide.asp*.

Comments may be eFiled. The eFiling option under the Documents & Filings tab on the Commission's Web page (*http://www.ferc.gov*) directs users to the eFiling Web page. First-time users should follow the eRegister instructions on the eFiling tab on the Web page to establish a user name and password before eFiling. Filers will receive an e-mailed confirmation of their eFiled comments.

Commenters filing electronically should not make a paper filing. Commenters that are not able to file electronically must send an original and 14 paper copies of the filing to: Federal Energy Regulatory Commission, Secretary of the Commission, 888 First Street, NE., Washington, DC 20426.

Parties interested in receiving automatic notification of activity in this docket may do so through eSubscription. The eSubscription option under the Documents & Filings tab on the Commission's Web page directs users to the eSubscription Web page. Users submit the docket numbers of the filings they wish to track and will subsequently receive an e-mail notification each time a filing is made under the submitted docket numbers. First-time users will need to establish a user name and password before eSubscribing.

Filed comments and FERC issuances may be viewed, printed, and downloaded remotely from the Commission's Web site. The eLibrary link found at the top of most of the Commission's Web pages directs users to FERC's eLibrary. From the eLibrary tab on the Web page, choose General Search, and in the Docket Number space provided, enter RM09–2, then click the Submit button at the bottom of the page. For help with any of the Commission's electronic submission or retrieval systems, contact FERC Online Support via e-mail at: *ferconlinesupport@ferc.gov*, or telephone toll-free: (866) 208–3676 (TTY (202) 502–8659).

FOR FURTHER INFORMATION CONTACT: Michael Miller may be reached by telephone at (202) 502–8415, by fax at (202) 273–0873, and by e-mail at *michael.miller@ferc.gov.*

SUPPLEMENTARY INFORMATION:

1. On July 16, 2009, the Commission issued a Notice of Proposed Rulemaking (NOPR) [1] in this docket proposing to revise the contract reporting requirements for (1) intrastate pipelines providing interstate services pursuant to section 311 of the NGPA; [2] and (2) Hinshaw pipelines providing interstate services subject to the Commission's NGA section 1(c) jurisdiction pursuant to blanket certificates issued under § 284.224 of the Commission's regulations. Specifically, the NOPR proposed to amend § 284.126(b) of the Commission's regulations to require that NGPA section 311 and Hinshaw pipelines make quarterly reports that contain, for each transportation and storage service provided during the preceding calendar quarter, the following information:

i. The full legal name, and identification number, of the shipper receiving the service, including whether there is an affiliate relationship between the pipeline and the shipper;

ii. The type of service performed (*i.e.,* firm or interruptible transportation, storage, or other service);

iii. The rate charged under each contract, specifying the rate schedule/name of service and docket where the rates were approved. The report should separately state each rate component set forth in the contract (*i.e.* reservation, usage, and any other charges);

iv. The primary receipt and delivery points covered by the contract, including the industry common code for each point;

v. The quantity of natural gas the shipper is entitled to transport, store, or deliver under each contract;

vi. The duration of the contract, specifying the beginning and ending month and year of the current agreement;

vii. Total volumes transported, stored, injected, or withdrawn for the shipper; and

viii. Total revenues received from the shipper. The report should separately state revenues received under each rate component.

2. In order to make the proposed quarterly reports more accessible to the public, the NOPR also proposed requiring that the reports be filed in a standardized electronic format to be developed by the Commission staff. In the NOPR, the Commission stated that it was ''in the process of developing a standardized electronic format for making the reports proposed in this NOPR. Once that process is complete, the Commission will make the standardized format available for public comment.'' [3]

3. By this notice, the Commission is requesting comment on the proposed quarterly reports. Attached to this Notice as an Appendix are:

i. A table that shows all the data elements (fields) that would be collected each quarter for each shipper that a filing entity provides with transportation or storage service. The table is not an example of the collection instrument or how the Commission intends to collect the information.

ii. A Data Dictionary and associated units of measure that defines what each element means and its characteristics (*e.g.* text field with 10 characters, e-mail address, numerical field, and relationship to other elements).

iii. Instructions to assist filers to report the data each quarter.

4. The Commission seeks comment on its proposal to adopt for reporting purposes an XML Schema.[4] Under the XML approach, filing entities submitting their quarterly data would be required to submit an XML filing package [5] that conforms to the XML Schema developed and maintained by FERC. Filers would be allowed to submit their XML filing packages using the existing eFiling portal. Once submitted, the XML filing package would undergo quality checks to see if it conforms to the XML Schema. Filing entities would receive an e-mail confirmation if the filing is successful or needs to be corrected. This approach is similar to that being developed for electronic tariffs in Docket No. RM01–

[1] *Contract Reporting Requirements of Intrastate Natural Gas Companies,* FERC Stats. & Regs. ¶ 32,644 (2009) (NOPR) published in the **Federal Register** on July 29, 2009 (74 FR 37658).

[2] 15 U.S.C. 3372.

[3] NOPR, FERC Stats. & Regs. ¶ 32,644 at P 29.

[4] The XML schema is a method by which the filing entities can communicate information to the Commission. The schema proscribes the metadata elements and the textual information that must be included in the filing package. The data elements included in the XML filing package are required to properly identify the nature of the FERC–549D, organize the FERC–549D database, and maintain the proper relationship of elements in relation to other elements.

[5] Filing entities would develop the XML filing package in accordance with the Commission's XML Schema. Open source and fee-based software is available to convert data in a spreadsheet and other documents into the XML filing package. The latest versions of Text Editors and Word Processing application may also have the capability to create the XML filing package.

5–000. *See http://www.ferc.gov/docs-filing/etariff.asp.*[6]

5. In addition, the Commission seeks comment on whether an ASP.NET Web-based form is more appropriate. Under the ASP.NET approach, the Commission would create a Web-based form that would be accessible to filers on the FERC Web site. Filing entities would not use the eFiling portal to submit their data. The Web-based form would be formatted and contain blank fields that filing entities can fill in with data for each shipper it provides with transportation or storage service each quarter. Once submitted, the data would undergo quality checks. Filing entities would receive an e-mail confirmation if the submission is successful or needs to be corrected.

Comments are also invited on the following issues:

1. Problems in measuring data elements collected in the table and data dictionary;

2. Terms and definitions of the elements in the table, data dictionary and instructions;

3. Whether the units of measure are appropriate;

4. Whether the instructions are clear or require modification;

5. The accuracy of the agency's burden estimate of the proposed collection of information;

6. Ways to enhance the quality, utility and clarity of the information to be collected;

7. Ways to minimize respondent information collection burden; and

8. The most effective way for the Commission to present the collected information to the public on the FERC Web site.

6. A paper version of the table with proposed data elements, instructions, and data dictionary, are attached as the Appendix to this Notice, but they are not being printed in the **Federal Register**. The Appendix is available on the FERC's eLibrary (*http://www.ferc.gov/docs-filing/elibrary.asp*) by searching Docket No. RM09–2, and through the FERC Public Reference Room. Interested parties may also request paper copies of the table, instructions, and data dictionary by contacting Michael Miller by telephone at (202) 502–8415, by fax at (202) 273–0873, or by e-mail at *michael.miller@ferc.gov*.

7. Comments on the proposed standardized electronic information collection and related burden estimate, including any related matters or alternative proposals that commenters may wish to discuss, must be submitted by 60 days after publication of this Notice in the **Federal Register**. The Commission shall also delay the date on which comments on the NOPR are due to the same date, in order to permit parties to include comments on the standardized electronic information collection within their comments on the NOPR.

Burden Statement: The proposed survey targets respondents who directly serve wholesale and retail customers. The Commission estimated in the NOPR that on an annual basis the burden to comply with this proposed rule will be as follows:

	Number of respondents annually (1)	Number of responses per respondent (2)	Average burden hours per response (3)	Total annual burden hours (1) × (2) × (3)
FERC–549D	125	4	3.5	1,750

Because of the various staffing levels that will be involved in preparing the documentation (legal, technical and support) the Commission is using an hourly rate of $150 to estimate the costs for filing and other administrative processes (reviewing instructions, searching data sources, completing and transmitting the collection of information). The estimated total annual cost to respondents is anticipated to be $262,500 [1,750 Total Annual Burden Hours times $150 per hour equals $262,500]. The cost per respondent is $2,100.

8. The reporting burden includes the total time, effort, or financial resources expended to generate, maintain, retain, disclose, or provide the information including: (1) Reviewing instructions; (2) developing, acquiring, installing, and utilizing technology and systems for the purposes of collecting, validating, verifying, processing, maintaining, disclosing and providing information; (3) adjusting the existing ways to comply with any previously applicable instructions and requirements; (4) training personnel to respond to a collection of information; (5) searching data sources; (6) completing and reviewing the collection of information; and (7) transmitting, or otherwise disclosing the information.

9. The respondent's cost estimate is based on salaries for professional and clerical support, as well as direct and indirect overhead costs. Direct costs include all costs directly attributable to providing this information, such as administrative costs and the cost for information technology. Indirect or overhead costs are costs incurred by an organization in support of its mission. These costs apply to activities which benefit the whole organization rather than any one particular function or activity.

By direction of the Commission.

Kimberly D. Bose,

Secretary.

Note: The Appendix (table with proposed FERC–549D data elements, instructions, and data dictionary) will not be printed in the **Federal Register**. The Appendix is available on the FERC's eLibrary (*http://www.ferc.gov/docs-filing/elibrary.asp*) by searching Docket No. RM09–2–000, and through the FERC Public Reference Room.

[FR Doc. E9–21108 Filed 9–2–09; 8:45 am]

BILLING CODE 6717–01–P

[6] *See also* Common FAQs about XML at *http://xml.silmaril.ie/.*

ENVIRONMENTAL PROTECTION AGENCY

40 CFR Part 52

[EPA–R06–OAR–2007–1064; FRL–8952–4]

Approval and Promulgation of Air Quality Implementation Plans; Louisiana; Emissions Inventory; Baton Rouge Ozone Nonattainment Area

AGENCY: Environmental Protection Agency (EPA).

ACTION: Proposed rule.

SUMMARY: The Environmental Protection Agency (EPA) is proposing to approve a revision to the Louisiana State Implementation Plan (SIP) to meet the emissions inventory requirements of the

Clean Air Act (CAA) for the Baton Rouge ozone nonattainment area. EPA is proposing to approve the SIP revision because it satisfies the emissions inventory requirements for 8-hour ozone nonattainment areas. EPA is proposing to approve the revision pursuant to section 110 of the CAA.

DATES: Written comments should be received on or before October 5, 2009.

ADDRESSES: Comments may be mailed to Mr. Guy Donaldson, Chief, Air Planning Section (6PD–L), Environmental Protection Agency, 1445 Ross Avenue, Suite 1200, Dallas, Texas 75202–2733. Comments may also be submitted electronically or through hand deliver/courier by following the detailed instructions in the **ADDRESSES** section of the direct final rule located in the rules section of this **Federal Register**.

FOR FURTHER INFORMATION CONTACT: Emad Shahin, Air Planning Section (6PD–L), Environmental Protection Agency, Region 6, 1445 Ross Avenue, Suite 700, Dallas, Texas 75202–2733, telephone 214–665–6717; fax number 214–665–7263; e-mail address *shahin.emad@epa.gov*.

SUPPLEMENTARY INFORMATION: In the final rules section of this **Federal Register**, EPA is approving the State's SIP submittal as a direct rule without prior proposal because the Agency views this as non-controversial submittal and anticipates no adverse comments. A detailed rationale for the approval is set forth in the direct final rule. If no adverse comments are received in response to this action no further activity is contemplated. If EPA receives adverse comments, the direct final rule will be withdrawn and all public comments received will be addressed in a subsequent final rule based on this proposed rule. EPA will not institute a second comment period. Any parties interested in commenting on this action should do so at this time.

For additional information see the direct final rule, located in the rules section of this **Federal Register**.

Dated: August 21, 2009.

Lawrence E. Starfield,

Acting Regional Administrator, Region 6.

[FR Doc. E9–21187 Filed 9–2–09; 8:45 am]

BILLING CODE 6560–50–P

DEPARTMENT OF DEFENSE

GENERAL SERVICES ADMINISTRATION

NATIONAL AERONAUTICS AND SPACE ADMINISTRATION

48 CFR Parts 9, 12, and 52

[FAR Case 2008–027; Docket 2009–0030, Sequence 1]

RIN 9000–AL38

Federal Acquisition Regulation; FAR Case 2008–027, Federal Awardee Performance and Integrity Information System

AGENCIES: Department of Defense (DoD), General Services Administration (GSA), and National Aeronautics and Space Administration (NASA).

ACTION: Proposed rule.

SUMMARY: The Civilian Agency Acquisition Council and the Defense Acquisition Regulations Council (Councils) are proposing to amend the Federal Acquisition Regulation (FAR) to implement Section 872 of the Duncan Hunter National Defense Authorization Act for Fiscal Year 2009. Section 872 requires the General Services Administration to establish and maintain a data system containing specific information on the integrity and performance of covered Federal agency contractors and grantees. Section 872 also requires awarding officials to review the data system and consider other past performance information when making any past performance evaluation or responsibility determination.

DATES: Interested parties should submit written comments to the Regulatory Secretariat on or before October 5, 2009 to be considered in the formulation of a final rule.

ADDRESSES: Submit comments identified by FAR case 2008–027 by any of the following methods:

- Regulations.gov: *http://www.regulations.gov*.

Submit comments via the Federal eRulemaking portal by inputting ''FAR Case 2008–027'' under the heading ''Comment or Submission''. Select the link ''Send a Comment or Submission'' that corresponds with FAR Case 2008–027. Follow the instructions provided to complete the ''Public Comment and Submission Form''. Please include your name, company name (if any), and ''FAR Case 2008–027'' on your attached document.

- Fax: 202–501–4067.
- Mail: General Services Administration, Regulatory Secretariat (VPR), 1800 F Street, NW., Room 4041, ATTN: Hada Flowers, Washington, DC 20405.

Instructions: Please submit comments only and cite FAR case 2008–027 in all correspondence related to this case. All comments received will be posted without change to *http://www.regulations.gov*, including any personal and/or business confidential information provided.

FOR FURTHER INFORMATION CONTACT: Ms. Meredith Murphy, Procurement Analyst, at (202) 208–6925 for clarification of content. For information pertaining to status or publication schedules, contact the Regulatory Secretariat at (202) 501–4755. Please cite FAR case 2008–027.

SUPPLEMENTARY INFORMATION:

A. Background.

The Duncan Hunter National Defense Authorization Act of 2009 (Public Law 110–417) was enacted on October 14, 2008. Section 872 of the Act, subject to the authority, direction, and control the Office of Management and Budget, requires the General Services Administration (GSA) to develop and maintain an information system containing specific information on the integrity and performance of covered Federal agency contractors and grantees.

In addition, the statute requires that contracting officers shall consider other past performance information available with respect to the offeror when making any responsibility determination. A responsibility determination, in accordance with the President's March 4, 2009, Government Contracting memorandum pertains to whether an offeror has historically completed projects both effectively and cost efficiently.

The statute stipulates that the information system shall be available to ''appropriate acquisition officials of Federal agencies, to such other government officials as the Administrator (of the GSA) determines appropriate, and, upon request, to the Chairman and Ranking Member of the committees of Congress having jurisdiction.'' (section 872(e)(1)).

The OMB's Office of Federal Financial Management will provide similar, separate guidance to grantees, given that section 872 was enacted to provide a source of information on integrity and past performance of contractors and grantees.

B. Sources of information.

To the extent feasible, the Councils identified existing sources of

information that would not require the creation of additional information submissions. If no existing source was found, preference was given to obtaining information from Government sources rather than contractors.

1. *Existing sources within the Government.*

a. The Excluded Parties List System (EPLS) is an adequate source of information on entities that are currently suspended or debarred. However, in general, suspensions or debarments last for a maximum of 3 years. Since the law requires information for the preceding 5 years, it will be necessary to access the EPLS archives to obtain information on entities that were suspended or debarred within the last 5 years but are no longer suspended or debarred.

b. Past Performance Information Retrieval System (PPIRS) and Contractor Performance Assessment Reporting System (CPARS). PPIRS contains past performance reports from all agencies. Some, but not all, Federal agencies currently use CPARS to enter information into PPIRS.

2. *New Government sources.*

a. *Contracting officer.* Contracting officers will provide information on determinations of non-responsibility and terminations for default or cause.

b. *Suspension/Debarment Official (SDO).* The SDO will provide the necessary information on administrative agreements.

3. *Contractors.*

The proposed rule requires contractors with contracts and grants over $10 million total to provide information relating to criminal, civil, and administrative proceedings directly.

C. The planned Federal Awardee Performance and Integrity Information System (FAPIIS).

This system will draw from existing systems where feasible and will also use existing systems as a location to store new information on contractor integrity.

The following business rules were developed to ensure timely availability of information and proper use of the information while also protecting against improper disclosure to the public:

1. Only Federal government personnel can view the information, except that a contractor can view its own information.

2. There must be a systems point of contact for system errors and a point of contact for each Government information entry.

3. Data is only accessible for a period of five years and will then be archived for an additional one-year period to allow an audit trail.

4. A contractor will have an opportunity to post comments regarding information that has been posted by the Government. The comments will be retained as long as the associated information is retained, *i.e.*, for a total period of six years. Contractor comments will remain part of the record unless the contractor revises them.

5. Instructions used in the FAPIIS will apply to both contracts and grants.

6. The system will be designed with an automatic notification to the contractor when new information is posted to the contractor's record.

D. Proposed changes to the FAR.

The Councils are proposing to amend FAR subparts 9.1, Responsible Prospective Contractors; 9.4, Debarment, Suspension, and Ineligibility; and Part 52, Solicitation Provisions and Contract Clauses, as well as making conforming changes in Part 12, to implement this rule as follows:

1. *Contracting officer determination of non-responsibility:*

a. FAR 9.105–2(a)(3) will require the contracting officer to enter into the FAPIIS data on contracts, including orders, over the simplified acquisition threshold if the contracting officer makes a final determination that the otherwise successful offeror is not a responsible source due to lack of satisfactory performance record or satisfactory record of integrity and business ethics.

b. FAR 9.104–3(d) will clarify the relationship of the non-responsibility determination and the Certificate of Competency (COC). When making a non-responsibility determination for a small business, the contracting officer must refer the matter to the Small Business Administration (SBA). If the SBA does not issue a COC, then the contracting officer, if the determination of non-responsibility was based on past performance or integrity and business ethics, must enter the determination into the FAPIIS.

2. *Terminations.*

Terminations for default or cause under this proposed rule are not covered in detail because FAR Case 2008–016, Termination for Default Reporting, is in process to extend the Defense Federal Acquisition Regulation Supplement (DFARS) requirement for the contracting officer to report contract terminations for default or cause into a common data base (CPAR/PPIRS). The Councils will seek specific comments on terminations. Both FAR cases will be worked jointly.

3. *Administrative agreements.*

In some cases where the SDO determines that suspending or debarring a contractor is not in the Government's interest, the SDO can negotiate an administrative agreement with the contractor. This administrative agreement sets forth compliance actions that the contractor must take within a certain time frame in order to be determined presently responsible. SDOs will now have to enter data about administrative agreements into the FAPIIS. This requirement is added to FAR 9.406–3 and 9.407–3.

4. *Contractor information regarding responsibility matters.*

The law requires any person ''with Federal agency contracts and grants valued in total greater than $10,000,000'' to input information required for inclusion in the information system. A new provision at 52.209–XX is added which requires an offeror to identify if it has cumulative active Federal contracts and grants with a total value (including any options) greater than $10 million. This is prescribed where the contract is expected to exceed $500,000.

If the offeror has more than $10 million in current contracts and grants, then the offeror must go to the FAPIIS website (to be specified) and provide information on any of the occurrences required to be reported in the information system. (Section 872, paragraph (f)).

5. *Contracting officer utilization of the information system and other past performance information.*

Procedures are provided for contracting officer access to the information system and utilization of the information. The Councils are committed to avoiding de facto debarments. The procedures emphasize that certain past information in the system may no longer be relevant to a determination of present responsibility. It is recommended that a statement to this effect be posted on the screen when the contracting officer accesses the information.

If the contracting officer does obtain relevant information that has not already resulted in suspension or debarment, the contracting officer must promptly—

- Contact the offeror to request additional information such as the offeror deems necessary in order to demonstrate responsibility;
- Notify, prior to proceeding with award, in accordance with agency procedures, the agency official responsible for initiating debarment or suspension action, if the information appears appropriate for that official's consideration.

• Document the file as to how the information was considered in any responsibility determination.

6. *Applicability to commercial items.*

Given that section 872 was enacted to provide a source of information on integrity and past performance of contractors and grantees, but does not specifically mention applicability to commercial items despite 41 U.S.C. 430, the Councils expect that the FAR Council will determine that the rule should apply to contracts for commercial items, as defined at FAR 2.101.

7. *Applicability to commercially available off-the-shelf (COTS) item contracts.*

Section 4203 of Public Law 104–106, the Clinger-Cohen Act of 1996 (41 U.S.C. 431), governs the applicability of laws to the procurement of COTS items and is intended to limit the applicability of laws to COTS acquisitions. The Clinger-Cohen Act provides that, if a provision of law contains criminal or civil penalties or if the Administrator for Federal Procurement Policy makes a written determination that it is not in the best interest of the Federal Government to exempt COTS item contracts, the provision of law will apply.

Therefore, given section 872 of the Duncan Hunter National Defense Authorization Act for Fiscal Year 2009, the Councils expect that the Administrator for Federal Procurement Policy will determine that the rule should apply to COTS item contracts.

This proposed rule is a significant regulatory action and, therefore, is subject to review under Section 6(b) of Executive Order 12866, Regulatory Planning and Review, dated September 30, 1993. This rule is not a major rule under 5 U.S.C. 804.

E. Regulatory Flexibility Act

The Councils do not expect this proposed rule to have a significant economic impact on a substantial number of small entities within the meaning of the Regulatory Flexibility Act, 5 U.S.C. 601, *et seq.*, because the rule will only impact an offeror that has failed to meet the Government's performance requirements or standards for integrity and business ethics. The FAR already contains standards for present responsibility of offerors. This information system provides an additional source for contracting officers to use making a responsibility determination. The proposed rule only imposes an information collection requirement on small businesses that have total Government grants and contracts exceeding $10 million. An Initial Regulatory Flexibility Analysis has, therefore, not been performed. We invite comments from small businesses and other interested parties. The Councils will consider comments from small entities concerning the affected FAR Parts 9, 12, and 52 in accordance with 5 U.S.C. 610. Interested parties must submit such comments separately and should cite 5 U.S.C. 601, *et seq.* (FAR case 2008–027), in correspondence.

F. Paperwork Reduction Act

The Paperwork Reduction Act (Pub. L. 104–13) applies because the proposed rule contains information collection requirements. Accordingly, the Regulatory Secretariat will submit a request for approval of a new information collection requirement concerning Federal Awardee Performance and Integrity Information System to the Office of Management and Budget under 44 U.S.C. Chapter 35, *et seq.*

Annual Reporting Burden:

The proposed rule requires that for each solicitation of $500,000 or more, the offeror respond whether it has, or has not, current contracts and grants under performance that total at least $10,000,000. Only if the offeror responds affirmatively is there any further information collection requirement. Given that the amount of current Federal contracts and grants is basic knowledge for any firm, the estimated number of hours for this initial response is 0.1 hours. Using data from the Federal Procurement Data System—Next Generation (FPDS-NG), it is estimated that there will be approximately 12,000 - 14,000 contracts over $500,000 each year. Estimating between five and six responses to each solicitation, there will be 80,000 responses annually to the question regarding contracts/grants exceeding $10 million.

It is estimated that 5,000 contractors will answer the first question affirmatively and then will have to enter data into the website. We have used a burden estimate of 0.5 hours to enter the company's data into the website. This time estimate does not include the time necessary to maintain the company's information internally. Most large businesses and some small businesses probably have established systems to track compliance. Such systems would be required in any complex organization to obtain the significant reductions that we have built into estimates of subsequent response time. At this time, all or most Government contractors have entered relevant company data in the Central Contractor Registration (CCR) in accordance with another information collection requirement. Therefore, the estimate includes an average of 100 hours per year for recordkeeping for each of the 5,000 respondents that will be required to provide additional information, for a total of 500,000 annual recordkeeping hours. The total annual reporting burden is estimated as follows:

Public reporting burden for this collection of information is estimated to average 0.15 hours per response, including the time for reviewing instructions, searching existing data sources, gathering and maintaining the data needed, and completing and reviewing the collection of information.

The annual reporting burden is estimated as follows:

Respondents: 8,000.

Responses per respondent: approx. 11.

Total annual responses: 90,000.

Preparation hours per response: approx. 0.15 hours.

Response burden hours: 13,000.

Recordkeeping hours: 500,000.

Total burden hours: 513,000.

G. Request for Comments Regarding Paperwork Burden

Submit comments, including suggestions for reducing this burden, not later than October 5, 2009 to: FAR Desk Officer, OMB, Room 10102, NEOB, Washington, DC 20503, and a copy to the General Services Administration, Regulatory Secretariat (VPR), 1800 F Street, NW, Room 4041, Washington, DC 20405.

Public comments are particularly invited on: whether this collection of information is necessary for the proper performance of functions of the FAR, and will have practical utility; whether our estimate of the public burden of this collection of information is accurate, and based on valid assumptions and methodology; ways to enhance the quality, utility, and clarity of the information to be collected; and ways in which we can minimize the burden of the collection of information on those who are to respond, through the use of appropriate technological collection techniques or other forms of information technology.

Requester may obtain a copy of the justification from the General Services Administration, Regulatory Secretariat (VPR), Room 4041, Washington, DC 20405, telephone (202) 501–4755. Please cite OMB Control Number 9000–00XX, Federal Awardee Performance and Integrity Information System, in all correspondence.

List of Subjects in 48 CFR Parts 9, 12, and 52

Government procurement.

Dated: August 27, 2009.

Al Matera,

Director, Acquisition Policy Division.

Therefore, DoD, GSA, and NASA propose amending 48 CFR parts 9, 12, and 52 as set forth below:

1. The authority citation for 48 CFR parts 9, 12, and 52 continues to read as follows:

Authority: 40 U.S.C. 121(c); 10 U.S.C. chapter 137; and 42 U.S.C. 2473(c).

PART 9—CONTRACTOR QUALIFICATIONS

2. Amend section 9.104–3 by revising paragraph (d)(1) to read as follows:

9.104–3 Application of standards.

* * * * *

(d) *Small business concerns.* (1)(i) Upon making a determination of nonresponsibility with regard to a small business concern, the contracting officer shall refer the matter to the Small Business Administration, which will decide whether to issue a Certificate of Competency (see Subpart 19.6).

(ii) If the determination of nonresponsibility is based on lack of a satisfactory performance record or lack of a satisfactory record of integrity and business ethics and SBA does not issue a Certificate of Competency, the contracting officer shall promptly document the determination of nonresponsibility in the FAPIIS.

* * * * *

3. Redesignate section 9.104–6 as section 9.104–7 and add a new section 9.104–6 to read as follows:

9.104–6 Federal Awardee Performance and Integrity Information System.

(a) Before awarding a contract (including an order under FAR Subparts 8.4, 13.3 or 16.5) in excess of the simplified acquisition threshold, the contracting officer shall review the Federal Awardee Performance and Integrity Information System (FAPIIS), (available at _____). (*Website should provide information on how to gain access, passwords, etc.*)

(b) The contracting officer shall consider all the information in the FAPIIS and other past performance information when making a responsibility determination or past performance evaluation. Since the FAPIIS may contain information covering a five year period, some of that information may no longer be relevant to a determination of present responsibility, *e.g.*, a prior administrative action such as debarment or suspension that has expired or otherwise been resolved.

(c) If the contracting officer obtains relevant information from the FAPIIS regarding criminal, civil, or administrative proceedings in connection with the award or performance of a Government contract (including an order); terminations for default or cause; or determinations of non-responsibility because the contractor does not have a satisfactory performance record or a satisfactory record of integrity and business ethics, the contracting officer shall, unless the contractor has already been debarred or suspended—

(1) Promptly request such additional information from the offeror as the offeror deems necessary in order to demonstrate the offeror's responsibility to the contracting officer (but see 9.405); and

(2) Notify, prior to proceeding with award, in accordance with agency procedures (see 9.406–3(a) and 9.407–3(a)), the agency official responsible for initiating debarment or suspension action, if the information appears appropriate for the official's consideration.

(d) The contracting officer shall document the file for each contract (including orders) in excess of the simplified acquisition threshold to indicate the manner in which the information in the FAPIIS or past performance evaluation was considered in any responsibility determination or past performance evaluation, as well as the action that was taken as a result of the information. A contracting officer who makes a nonresponsibility determination is required to enter that information into the FAPIIS in accordance with 9.105–2(a)(3).

4. Revise the newly redesignated section 9.104–7 to read as follows:

9.104–7 Solicitation provisions.

(a) The contracting officer shall insert the provision at 52.209–5, Certification Regarding Responsibility Matters, in solicitations where the contract value is expected to exceed the simplified acquisition threshold.

(b) The contracting officer shall insert the provision at 52.209–XX, Information Regarding Responsibility Matters, in solicitations where the resultant contract value is expected to exceed $500,000.

5. Amend section 9.105–1 by revising the introductory text of paragraph (c); by removing paragraph (c)(1); and redesignating paragraphs (c)(2) through (c)(6) as paragraphs (c)(1) through (c)(5). The revised paragraph reads as follows:

9.105–1 Obtaining information.

* * * * *

(c) In making the determination of responsibility, the contracting officer shall consider relevant past performance information (see 9.104–1(c) and Subpart 42.15); the Excluded Parties List System maintained in accordance with Subpart 9.4; and the FAPIIS (if required in accordance with 9.104–6). In addition, the contracting officer should use the following sources of information to support such determinations:

* * * * *

6. Amend section 9.105–2 by revising paragraph (a) to read as follows:

9.105–2 Determinations and documentation.

(a) *Determinations.* (1)(i) The contracting officer's signing of a contract constitutes a determination that the prospective contractor is responsible with respect to that contract, but see 9.104–6(d).

(ii) When an offer on which an award would otherwise be made is rejected because the prospective contractor is found to be nonresponsible, the contracting officer shall make, sign, and place in the contract file a determination of nonresponsibility, which shall state the basis for the determination.

(2) If the contracting officer determines that a responsive small business lacks certain elements of responsibility, the contracting officer shall comply with the procedures in Subpart 19.6. When a certificate of competency is issued for a small business concern (see Subpart 19.6), the contracting officer may accept the factors covered by the certificate without further inquiry.

(3) The contracting officer shall enter the determination of nonresponsibility in the FAPIIS if—

(i) The contract (including an order) is valued at more than the simplified acquisition threshold;

(ii) The determination of nonresponsibility is based on lack of satisfactory performance record or satisfactory record of integrity and business ethics; and

(iii) The Small Business Administration does not issue a certificate of competency.

* * * * *

7. Amend section 9.406–3 by adding paragraph (f) to read as follows:

9.406–3 Procedures.

* * * * *

(f) If the contractor enters into an administrative agreement with the Government in order to resolve a debarment proceeding, the debarment official shall access the website at _____ and enter the requested information.

8. Amend section 9.407–3 by adding paragraph (e) to read as follows:

9.407–3 Procedures.

* * * * *

(e) If the contractor enters into an administrative agreement with the Government in order to resolve a suspension proceeding, the suspension official shall access the website at _____ and enter the requested information.

PART 12—ACQUISITION OF COMMERICAL ITEMS

9. Amend section 12.301 by adding paragraph (d)(3) to read as follows:

12.301 Solicitation provisions and contract clauses for the acquisition of commercial items.

* * * * *

(d) * * *

(3) Insert the provision at 52.209–XX, Information Regarding Responsibility Matters, as prescribed in 9.104–7(b).

* * * * *

PART 52—SOLICITATION PROVISIONS AND CONTRACT CLAUSES

10. Amend section 52.209–5 by removing from the introductory paragraph the phrase ''9.104–6'' and adding ''9.104–7(a)'' in its place; and by revising the date of the provision and paragraph (a)(1)(B) to read as follows:

52.209–5 Certification Regarding Responsibility Matters.

* * * * *

CERTIFICATION REGARDING RESPONSIBILITY MATTERS (DATE)

(a) * * *

(1) * * *

(B)(i) Have [ ] have not [ ], within a three-year period preceding this offer, been convicted of or had a civil judgment rendered against them for: commission of fraud or a criminal offense in connection with obtaining, attempting to obtain, or performing a public (Federal, State, or local) contract or subcontract; violation of Federal or State antitrust statutes relating to the submission of offers; or commission of embezzlement, theft, forgery, bribery, falsification or destruction of records, making false statements, tax evasion, violating Federal criminal tax laws, or receiving stolen property (If offeror checks ''have'', the offeror shall also see 52.209–XX).

* * * * *

11. Add section 52.209–XX to read as follows:

52.209–XX Information Regarding Responsibility Matters.

As prescribed at 9.104–7(b), insert the following provision:

INFORMATION REGARDING RESPONSIBILITY MATTERS (DATE)

(a) *Definition.*

Principal, as used in this provision, means an officer, director, owner, partner, or a person having primary management or supervisory responsibilities within a business entity (*e.g.*, general manager; plant manager; head of a subsidiary, division, or business segment; and similar positions).

Federal contracts and grants with total value (including any options) greater than $10,000,000 means—

(1) The value, at the time of their award, of the current, active contracts and grants, including all priced options; and

(2) The total value, at the time of their award, of all current, active orders under indefinite-delivery, indefinite-quantity, 8(a), or requirements contracts (including task and delivery and multiple-award schedules).

(b) The offeror [ ] has [ ] does not have current active Federal contracts and grants with total value (including any options) greater than $10,000,000.

(c) If the offeror checked ''has'' in paragraph (b) of this provision, the offeror represents, by submission of this proposal, that its information in the Federal Awardee Performance and Integrity Information System (FAPIIS) is current, accurate, and complete as of the date of submission of this proposal with regard to the following information:

(1) Whether the offeror, and/or any of its principals, has or has not, within the last five years, been involved in civil or criminal proceeding, or any administrative proceeding, in connection with the award to or performance by the offeror of a Federal or State contract or grant, to the extent that such proceeding resulted in any of the following dispositions:

(i) In a criminal proceeding, a conviction.

(ii) In a civil proceeding, a finding of fault and liability that results in the payment of a monetary fine, penalty, reimbursement, restitution, or damages of $5,000 or more.

(iii) In an administrative proceeding, a finding of fault and liability that results in—

(A) The payment of a monetary fine or penalty of $5,000 or more; or

(B) The payment of a reimbursement, restitution, or damages in excess of $100,000.

(iv) To the maximum extent practicable and consistent with applicable laws and regulations, in a criminal, civil, or administrative proceeding, a disposition of the matter by consent or compromise with an acknowledgment of fault by the Contractor if the proceeding could have led to any of the outcomes specified in subparagraphs (c)(1)(i), (c)(1)(ii), or (c)(1)(iii) of this section.

(2) If the offeror has been involved in the last five years in any of the occurrences listed in (c)(1) of this section, whether the offeror has provided the requested information with regard to each occurrence.

(d) The offeror, if awarded a contract as a result of this solicitation, shall update the information in the FAPIIS on a semi-annual basis, throughout the life of the contract.

(End of provision)

[FR Doc. E9–21174 Filed 9–2–09; 8:45 am]

BILLING CODE 6820–EP–S

DEPARTMENT OF TRANSPORTATION

Federal Motor Carrier Safety Administration

49 CFR Part 367

[Docket No. FMCSA–2009–0231]

RIN 2126–AB19

Fees for the Unified Carrier Registration Plan and Agreement

AGENCY: Federal Motor Carrier Safety Administration (FMCSA), DOT.

ACTION: Notice of Proposed Rulemaking.

SUMMARY: This proposed rule would establish annual registration fees and a fee bracket structure for the Unified Carrier Registration (UCR) Agreement for the calendar year beginning on January 1, 2010, as required under the Unified Carrier Registration Act of 2005, enacted as Subtitle C of Title IV of the Safe, Accountable, Flexible, Efficient Transportation Equity Act: A Legacy for Users, as amended.

DATES: You must submit comments on or before September 18, 2009.

ADDRESSES: You may submit comments, identified by docket number FMCSA–2009–0231 and/or RIN 2126–AB19, by any of the following methods—Internet, facsimile, regular mail, or hand-deliver.

Federal eRulemaking Portal: Federal Docket Management System (FDMS) Web site at *http://www.regulations.gov*. The FDMS is the preferred method for submitting comments, and we urge you to use it. In the ''Comment'' or ''Submission'' section, type Docket ID Number ''FMCSA—2009—0231'', select ''Go'', and then click on ''Send a Comment or Submission.'' You will receive a tracking number when you submit a comment.

Fax: 1–202–493–2251.

Mail, Courier, or Hand-Deliver: U.S. Department of Transportation, Docket Operations (M–30), West Building Ground Floor, Room W12–140, 1200 New Jersey Avenue, SE., Washington, DC 20590. Office hours are between 9 a.m. and 5 p.m., ET, Monday through Friday, except Federal holidays.

Docket: Comments and material received from the public, as well as background information and documents mentioned in this preamble, are part of docket FMCSA–2009–0231, and are available for inspection and copying on the Internet at *http://www.regulations.gov*. You may also

view and copy documents at the U.S. Department of Transportation's Docket Operations Unit, West Building Ground Floor, Room W12–140, 1200 New Jersey Avenue, SE., Washington, DC.

Privacy Act: All comments will be posted without change including any personal information provided to the FDMS at *http://www.regulations.gov*. Anyone can search the electronic form of all our dockets in FDMS, by the name of the individual submitting the comment (or signing the comment, if submitted on behalf of an association, business, labor union, etc). The Department of Transportation's (DOT) complete Privacy Act Statement was published in the **Federal Register** on April 11, 2000 (65 FR 19476), and can be viewed at *http://docketsinfo.dot.gov*. Comments received after the comment closing date will be included in the docket, and we will consider late comments to the extent practicable. FMCSA may, however, issue a final rule at any time after the close of the comment period.

FOR FURTHER INFORMATION CONTACT: Ms. Julie Otto, Office of Enforcement and Program Delivery, (202) 366–0701, FMCSA, Department of Transportation, 1200 New Jersey Ave. SE., Washington, DC 20590 or by e-mail at: *FMCSAregs@dot.gov*.

SUPPLEMENTARY INFORMATION: The preamble is organized as follows:

Table of Contents

I. Legal Basis for the Rulemaking
II. Statutory Requirements for the UCR Fees
III. Background of UCR Fees 2007 to Present
IV. UCR Fee Proposals for Calendar Year 2010
A. The UCR Plan Recommendation
1. Certification of State Revenues
2. Administrative Costs
3. Revenue Target
4. Carrier Population
5. Number of Fee Brackets
6. Fee Levels for Each Bracket
B. The FMCSA Analysis
1. Bracket Shifting
2. Compliance and Enforcement
3. The Board's Response to FMCSA Concerns: Alternative Proposals
V. The FMCSA Fee Proposal
A. Adjustment for Change in CMV Definition
B. Registration Percentage Reasonableness (RPR) Factor
C. Shortfall Adjustment Factor
D. FMCSA Adjustments
VI. Regulatory Changes
VII. Regulatory Analyses and Notices

I. Legal Basis for the Rulemaking

This proposed rule involves an adjustment in the annual registration fees for the Unified Carrier Registration Agreement (UCR Agreement) established by 49 U.S.C. 14504a, enacted by section 4305(b) of the Safe, Accountable, Flexible, Efficient Transportation Equity Act: A Legacy for Users (SAFETEA–LU) (119 Stat. 1144, 1764 (2005)). Section 14504a states that the ''Unified Carrier Registration Plan * * * mean[s] the organization * * * responsible for developing, implementing, and administering the unified carrier registration agreement'' (49 U.S.C. 14504a(a)(9)) (UCR Plan). The UCR Agreement developed by the UCR Plan is the ''interstate agreement governing the collection and distribution of registration and financial responsibility information provided and fees paid by motor carriers, motor private carriers, brokers, freight forwarders and leasing companies * * *.'' (49 U.S.C. 14504a(a)(8)).

Congress in SAFETEA–LU also repealed 49 U.S.C. 14504 governing the Single State Registration System (SSRS) (SAFETEA–LU section 4305(a)).[1] The legislative history indicates that the purpose of the UCR Plan and Agreement is both to ''replace the existing outdated system [SSRS]'' for registration of interstate motor carrier entities with the States and to ''ensure that States don't lose current revenues derived from SSRS'' (S. Rep. 109–120, at 2 (2005)).[2]

The statute provides for a 15-member Board of Directors for the UCR Plan and Agreement (Board) to be appointed by the Secretary of Transportation. The statute specifies that the Board should consist of one individual (either the Federal Motor Carrier Safety Administration (FMCSA) Deputy Administrator or another Presidential appointee) from the Department of Transportation; four directors (one from each of the four FMCSA service areas), selected from among the chief administrative officers of the State agencies responsible for administering the UCR Agreement; five directors from among the professional staffs of State agencies responsible for administering the UCR Agreement, to be nominated by the National Conference of State Transportation Specialists (NCSTS); and five directors representing the motor carrier industry, of whom at least one must be from a national trade association representing the general motor carrier of property industry and one from a motor carrier that falls within the smallest fleet fee bracket. The establishment of the Board was announced in the **Federal Register** on May 12, 2006 (71 FR 27777). On July 19, 2007 (72 FR 39660), FMCSA published a notice announcing the reappointment to the Board of the five Board members from the State agencies nominated by NCSTS. On June 30 2008, (73 FR 36956) FMCSA published a notice announcing the reappointment of the members from the four FMCSA service areas to the Board.

Among its responsibilities, the Board is required to submit to the Secretary of Transportation[3] a recommendation for the initial annual fees to be assessed motor carriers, motor private carriers, freight forwarders, brokers and leasing companies (49 U.S.C. 14504a(d)(7)(A)). FMCSA is directed to set the fees within 90 days after receiving the Board's recommendation and after notice and opportunity for public comment (49 U.S.C. 14504a(d)(7)(B)). Subsequent adjustment to the fees and fee brackets must be adopted following the same timelines and procedures of recommendation by the Board and review and adoption by FMCSA after notice and an opportunity for public comment (*Id).* As provided in 49 U.S.C. 14504a(f)(1)(B): ''The fees shall be determined by [FMCSA] based upon the recommendations of the [UCR] Board * * *.'' The statute also directs both the Board and FMCSA to consider several relevant factors in their respective roles of recommending and setting the fees [49 U.S.C. 14504a(d)(7)(A), (f)(1) and (g)]. Thus, FMCSA has an obligation to consider independently the Board's recommendation in light of the statutory requirements, and to make its own determination of the appropriate fees and fee bracket structure, including modifying the Board's recommendation, if necessary.

II. Statutory Requirements for the UCR Fees

The statute specifies that fees are to be determined by FMCSA based upon the recommendation of the Board. In recommending the level of fees to be assessed in any agreement year, and in setting the fee level, both the Board and FMCSA shall consider the following factors:

1. Administrative costs associated with the UCR Plan and Agreement.

2. Whether the revenues generated in the previous year and any surplus or shortage from that or prior years enable

[1] This repeal became effective on January 1, 2008, in accordance with section 4305(a) of SAFETEA–LU and section 1537(c) of the Implementing Recommendations of the 9/11 Commission Act of 2007, Pub. L. 110–53, 121 Stat. 266, 467 (Aug. 3, 2007).

[2] The Senate bill's provisions were enacted ''with modifications.'' H. Conf. Rep. No. 109–203, at 1020 (2005).

[3] The Secretary's functions under section 14504a have been delegated to the Administrator of the Federal Motor Carrier Safety Administration. 49 CFR 1.73(a)(7), as amended (71 FR 30833 May 31, 2006).

the participating States to achieve the revenue levels set by the Board.

3. Provisions governing fees in 49 U.S.C. 14504a(f)(1).

Subsection (f)(1) provides that the fees charged must satisfy the following criteria:

Fees charged to a motor carrier, motor private carrier, or freight forwarder under the UCR Agreement shall be based on the number of commercial motor vehicles owned or operated by the motor carrier, motor private carrier, or freight forwarder. The statute initially defined ''commercial motor vehicles'' (CMVs) for this purpose as including both self-propelled and towed vehicles [former 49 U.S.C. 14504a(a)(1)(A) and 31101(1)]. The fees set in 2007, and applied as well in 2008 and 2009, were determined on that basis. However, section 701(d)(1)(A) of Public Law 110–432, Div. A, 122 Stat. 4906 (Oct. 16, 2008) amended the definition of CMV for the purpose of setting UCR fees for years beginning after December 31, 2009, to mean a ''self-propelled vehicle described in section 31101'' (49 U.S.C. 14504a(a)(1)(A)(ii)).

Fees charged to a broker or leasing company under the UCR Agreement shall be equal to the smallest fee charged to a motor carrier, motor private carrier, and freight forwarder, or to the smallest fee charged under the UCR Agreement.

Section 14504a(f)(1) also stipulates that for the purpose of charging fees the Board shall develop no more than 6 and no fewer than 4 brackets of carriers (including motor private carriers) based on the size of the fleet, *i.e.,* the number of CMVs owned or operated. The fee scale is required to be progressive in the amount of the fee. The registration fees for the UCR Agreement may be adjusted within a reasonable range on an annual basis if the revenues derived from the fees are either insufficient to provide the participating States with the revenues they are entitled to receive or exceed those revenues (49 U.S.C. 14504a(f)(1)(E)).

Overall, the fees assessed under the UCR Agreement must produce the level of revenue established by statute. Section 14504a(g) establishes the revenue entitlements for States that choose to participate in the UCR Plan. That section provides that a participating State, which participated in SSRS in the registration year prior to the enactment of the Unified Carrier Registration Act of 2005 (*i.e.,* the 2004 registration year), is entitled to receive revenues under the UCR Agreement equivalent to the revenues it received in 2004. Participating States that also collected intrastate registration fees from interstate motor carrier entities (whether or not they participated in SSRS) are also entitled to receive revenues of this type under the UCR Agreement, in an amount equivalent to the amount received in the 2004 registration year. The section also requires that States which did not participate in SSRS in 2004, but which choose to participate in the UCR Plan, may receive revenues not to exceed $500,000 per year.

III. Background of UCR Fees 2007 to Present

The initial UCR fees and fee structure was published by FMCSA on August 24, 2007 (72 FR 48585), which allowed the Board to begin collecting fees (49 U.S.C. 14504a). On February 1, 2008, the Board submitted the 2008 recommendation to FMCSA indicating that it was ''too early to ascertain whether the revenues collected in 2007 will equal or approximate the total revenue'' to which the States are entitled. A copy of this recommendation is provided in this docket. As a result, on February 26, 2008 (73 FR 10157), FMCSA published correcting amendments to the 2007 final rule, clarifying that the fees and fee structure were established for every registration year unless (and until) the Board recommended an adjustment to the annual fees (73 FR 10157). On July 11, 2008, the Board sent a letter to FMCSA stating that the fees would remain the same as 2007. The Board stated that ''additional time to register entities, check that carriers registered in the correct bracket, and establish effective roadside enforcement'' would result in better collection of revenue. A copy of this letter is provided in this docket. The table below shows the fees and fee structure in place from 2007 to 2009.

TABLE 1—UCR FEES AND FEE STRUCTURE 2007–2009

Bracket	Number of commercial motor vehicles owned or operated by exempt or non-exempt motor carrier, motor private carrier, or freight forwarder	Fee per entity for exempt or non-exempt motor carrier, motor private carrier, or freight forwarder	Fee per entity for broker or leasing company
B1	0–2	$39	$39
B2	3–5	116	
B3	6–20	231	
B4	21–100	806	
B5	101–1,000	3,840	
B6	1,001 and above	37,500	

From collection years 2007 to the present, some participating States have achieved their revenue entitlement while others have exceeded it. In the latter case, the excess amount is forwarded to a depository established by the Board for distribution to those States that have not collected enough fees to reach their entitlement (49 U.S.C. 14504a(h)(2) and (3)). However, overall, revenue collections in 2009, like the previous years, have fallen short. The following table shows the amount of revenue shortfall for each registration year, based on information provided by the Board. Figures to date show that States are approximately 28 percent short of collecting their revenue entitlement.

TABLE 2—UCR REGISTRATION SUMMARY 2007 TO 2009 *

Registration year	State revenue entitlement	Entities registered	Revenue received	Revenue shortfall
2007	$101,772,400	237,157	$73,937,310	$27,835,090
2008	107,777,060	270,794	76,617,155	31,159,905
2009	107,777,060	282,483	77,148,988	30,628,072

* Does not include estimated administrative expenses and revenue reserve that are included in the overall revenue target.

Beginning in early 2009, the Board began discussions to address the shortfall in the 2010 fee recommendation. On February 12, 2009, the Board held a public meeting by telephone conference call to discuss the 2010 fees and fee structure. At that meeting, a motion was made to recommend a proposal that passed with a vote of 10 to 3 with one abstention. On April 3, 2009, the Board submitted a recommendation based on this proposal to the Secretary.

Upon review by FMCSA, several fundamental issues were identified in the assumptions of the April 3 recommendation. To clarify the issues and assist the Board, FMCSA hosted a conference call on April 23, 2009, with the Board's chair and the chair of the Revenue and Fees Subcommittee. After this discussion, the Subcommittee met and discussed several options at the May 14, 2009, Board meeting. No consensus was reached. At the June 16, 2009, meeting, the Board discussed informal options developed by a member of both the Board and the Revenue and Fees Subcommittee. The Board voted to reconsider the April 3 recommendation upon hearing these new options and the matter was referred back to the Subcommittee for further action. At the July 9, 2009, meeting, a vote was taken on two new options but the Board was unable to reach consensus on either proposal with both options receiving an equal number of votes. On July 15, 2009, the Board sent a letter to the Secretary noting this fact and asked FMCSA to proceed with the rulemaking process using the April 3 recommendation.

The following sections in this notice of proposed rulemaking (NPRM) discuss the Board recommendation and other proposals in greater detail and outline the areas where FMCSA encouraged the Board to address the issues of greatest concern. Section V details the FMCSA-recommended 2010 UCR fees and fee structure. The NPRM concludes with the regulatory analysis and notices.

IV. UCR Fee Proposals for Calendar Year 2010

In the course of developing its fee recommendation for 2010, the Board considered several different proposals, both before and after submitting a recommendation on April 3, 2009. Some of these proposals, in addition to the proposal formally recommended, were either supported by different interests on the Board or were considered for possible substitution for the recommended proposal. Each proposal is set out in this NPRM for public comment; however, FMCSA does not believe that each proposal satisfies the statutory requirements. After setting out and assessing each proposal, FMCSA proposes a fee and fee bracket structure that is based on one of the proposals with modifications to meet the statutory requirements.

A. The UCR Plan Recommendation

The first proposal is the UCR Plan formal recommendation. The Board's fee recommendation was approved by a vote of a majority of the members of the Board on February 12, 2009, and was submitted to the Secretary on April 3, 2009. It is available at *http://www.regulations.gov* under the docket number shown above. It recommends establishing the fee and fee bracket structure shown in the following table:

TABLE 3—UCR BOARD FORMAL FEE AND BRACKET RECOMMENDATION FOR 2010 TRANSMITTED ON APRIL 3, 2009

Bracket	Number of commercial motor vehicles owned or operated by exempt or non-exempt motor carrier, motor private carrier, or freight forwarder	Fee per entity for exempt or non-exempt motor carrier, motor private carrier, or freight forwarder	Fee per entity for broker or leasing company
B1	0–1	$83	$83
B2	2–5	166	.....
B3	6–20	497	.....
B4	21–100	1,741	.....
B5	101–1,000	8,373	.....
B6	1,001 and above	82,983	.....

The Board assigned its Revenue and Fees Subcommittee responsibility for calculating the overall revenue requirement and recommending fees and the fee bracket structure.[4] The Board then reviewed the analysis conducted by the Revenue and Fees Subcommittee and selected the fees and fee bracket structure that it recommended to FMCSA.[5]

During the course of the Subcommittee and Board consideration of various proposals, industry representatives on the Board[6] took the position that they would not support any recommendation that adjusted the

[4] The membership of the Subcommittee is shown in Appendix BB of the April 3 transmittal.

[5] The FMCSA designated representative abstained from the Board's vote regarding the fee recommendation to prevent any real or potential conflict of interest due to his position within FMCSA in reviewing the Board's recommendation and setting the fees under the statute.

[6] Under 49 U.S.C. 14504a(d)(1)(B)(iii), five of the fifteen members of the board are ''from the motor carrier industry.''

fees beyond the amount necessary to reflect the statutory amendment changing the definition of commercial motor vehicle for purposes of calculating fleet size. Such a proposal, which was presented, but not voted on, at the Board's February 12, 2009, public meeting, is set out in the following table:

TABLE 4—PROPOSED FEE AND FEE STRUCTURE FOR 2010 BASED ON REVISED DEFINITION OF CMV

Bracket	Number of commercial motor vehicles owned or operated by exempt or non-exempt motor carrier, motor private carrier, or freight forwarder	Fee per entity for exempt or non-exempt motor carrier, motor private carrier, or freight forwarder	Fee per entity for broker or leasing company
B1	0–1	$61	$61
B2	2–5	122	
B3	6–20	366	
B4	21–100	1,281	
B5	101–1,000	6,163	
B6	1,001 and above	61,081	

These two proposals in Tables 3 and 4 are similar with one major exception. The Board's recommendation (Table 3) was premised on an assumption that only 260,466 motor carrier entities would register with the UCR Plan in 2010, out of the 433,535 motor carrier entities that FMCSA and the Board identified as active. The proposal informally supported by industry representatives (Table 4) assumed that all 433,535 apparently active entities will register in 2010. Because of the similarity between these two proposals, they can be discussed together for the purpose of assessing their compliance with the statutory requirements.

The discussion below of the development of the population will address the difference between the two proposals. The methodology the Board and FMCSA used to derive the 433,535 figure is discussed later in this section. Table 4 is particularly significant in that it sets the new ''baseline'' for the UCR fee and fee structure based on the statutory change amending the definition of CMV which removed trailers. Before discussing the recommendation and various alternative proposals, FMCSA will discuss the elements common to each proposal.

1. Certification of State Revenues

The first step in certifying State revenue entitlements is to establish the participating jurisdictions for 2010. Section 14504a(e)(1) of the statute established a final deadline of August 10, 2008, for participation by the 51 States eligible to participate in the UCR Plan and Agreement.[7] Of the 38 States that participated in SSRS in 2006, all but two, California and North Carolina, agreed to participate in the UCR in registration year 2007. Of the thirteen States that did not participate in SSRS, only Oregon agreed to participate in the UCR for registration year 2007.

Prior to the August 10, 2008, statutory deadline, both California and North Carolina, formerly States participating in SSRS, joined the UCR Plan. Oregon withdrew from participation and Pennsylvania,[8] Alaska and Delaware, which had not participated in SSRS, agreed to participate in the UCR for registration year 2008 and subsequent years. Therefore, there are now 41 States participating and 10 States (including the District of Columbia) not participating.

To develop a nationwide figure for the replacement revenues needed under the UCR Agreement, the Board asked those States that either had participated in SSRS or had intrastate registration revenues statutorily authorized to be included in the total revenue amount to provide information on the revenues they received for the registration year 2004. This was the year specified in the statute for establishing the amount of revenues they were entitled to receive under the UCR Agreement. The total certified State revenue figure for UCR for 2010 is $106,777,060. (See Table 5 which is based on Exhibit D to the Board's recommendation.)

SAFETEA–LU caps the maximum revenue figure for other UCR States that did not participate in SSRS at $500,000 per year (49 U.S.C. 14504a(g)(3)). Because two such non-SSRS States have agreed to participate in the UCR for registration year 2010 (Alaska and Delaware), the Board added $1,000,000 to the total entitlement figure, bringing the total State revenue requirement for 2010 to $107,777,060.

The Board's calculation of the total revenue for 2010 was properly based upon the revenues collected by the participating States (both under SSRS and for intrastate registration of interstate carriers) for the calendar year 2004. These State revenue entitlements are unchanged from the entitlements for 2008 and 2009, which were previously approved by FMCSA orders. In accordance with 49 U.S.C. 14504a(g)(4), FMCSA proposes to approve the amount of revenue under the UCR Agreement to which each State participating in 2010 is entitled, as specified in Table 5.

TABLE 5—STATE UCR REVENUE ENTITLEMENTS

State	Total 2010 UCR revenue entitlements
Alabama	$2,939,964.00
Arkansas	1,817,360.00
California	2,131,710.00
Colorado	1,801,615.00
Connecticut	3,129,840.00
Georgia	2,660,060.00
Idaho	547,696.68
Illinois	3,516,993.00
Indiana	2,364,879.00
Iowa	474,742.00
Kansas	4,344,290.00
Kentucky	5,365,980.00
Louisiana	4,063,836.00
Maine	1,555,672.00
Massachusetts	2,282,887.00
Michigan	7,520,717.00
Minnesota	1,137,132.30
Missouri	2,342,000.00
Mississippi	4,322,100.00
Montana	1,049,063.00
Nebraska	741,974.00
New Hampshire	2,273,299.00
New Mexico	3,292,233.00
New York	4,414,538.00

[7] The District of Columbia, which is not participating, is considered a State for this purpose (49 U.S.C. 13102(21)).

[8] Pennsylvania did not participate in SSRS; however, the statute permits it to collect revenues generated under the UCR Agreement in an amount equivalent to the amount it collected in intrastate registration fees from interstate motor carriers in 2004. 49 U.S.C. 14504a(g)(2).

TABLE 5—STATE UCR REVENUE ENTITLEMENTS—Continued

State	Total 2010 UCR revenue entitlements
North Carolina	372,007.00
North Dakota	2,010,434.00
Ohio	4,813,877.74
Oklahoma	2,457,796.00
Pennsylvania	4,945,527.00
Rhode Island	2,285,486.00
South Carolina	2,420,120.00
South Dakota	855,623.00
Tennessee	4,759,329.00
Texas	2,718,628.06
Utah	2,098,408.00
Virginia	4,852,865.00
Washington	2,467,971.00
West Virginia	1,431,727.03
Wisconsin	2,196,680.00
Sub-Total	106,777,059.81
Alaska	500,000
Delaware	500,000

TABLE 5—STATE UCR REVENUE ENTITLEMENTS—Continued

State	Total 2010 UCR revenue entitlements
Total State Revenue Entitlement	107,777,060

2. Administrative Costs

Under section 14504a(d)(7) of the statute, the costs incurred by the Board to administer the UCR Agreement are eligible for inclusion in the total revenue to be collected. The Board continues to estimate $5,000,000 for 2010 administrative expenses, and included that amount in the revenue target.

3. Revenue Target

In addition to the 2010 State revenue target ($107,777,060) and the administrative expenses ($5,000,000), the Board also included a reserve in its revenue target recommendation to FMCSA an additional amount of $563,885, equal to one-half of one percent of the State revenue total and administrative expenses. This calculation methodology is consistent with the 2007 final rule. This brings the overall UCR entitlement to $113,340,945.

4. Carrier Population

The Board's recommendation is based on a method for determining the carrier population that is different from the one used in 2007. In 2007, the Board assumed that revenues would be generated ''from all motor carrier entities involved in interstate commerce.'' Each of the five categories of motor carrier entities is defined by statute (in some cases with modifications or additions found in section 14504a) as shown in Table 6 below.

TABLE 6—CATEGORIES OF MOTOR CARRIER ENTITIES

Category	Definition in 49 U.S.C.
Motor Carrier	13102(14) and 14504a(a)(5).
Motor Private Carrier	13102(15).
Freight Forwarder	13102(8) [Freight forwarders that operate motor vehicles are treated as motor carriers. 13903(b) and 14504a(b)].
Broker	13102(2).
Leasing Company	14504a(a)(4).

To estimate the number of 2007 UCR entities, the Board (using the SafetyNet system) filtered data from the FMCSA Motor Carrier Management Information System (MCMIS) to capture carriers that had updated their MCS–150 census file [9], had an inspection, crash, safety audit, or compliance review recorded within the past 12 months (March 1, 2006, through February 26, 2007). Applying this criteria (or filter) to identify recent activity to approximately 730,000 carriers listed in the database, the Board filtered out almost 380,000 carriers, leaving an estimated total number of active interstate carriers of 350,698. The Board then considered freight forwarders and brokers listed in the FMCSA Licensing and Insurance (L&I) System. The number, as provided by FMCSA, was approximately 19,000. After freight forwarders that also operate CMVs were excluded to avoid double counting, the Board estimated the total number of freight forwarders and brokers as 14,575. Summing the 350,698 active interstate carriers and 14,575 freight forwarders and brokers, the Board arrived at a total affected population of 365,273.

To establish its carrier population estimate for 2010, the Board began with the MCMIS database for February 4, 2009, and applied the same filters used in 2007 with the minor change of extending the activity period to 15 months. The Board also included in the set of filters whether the carrier had registered under UCR. In addition, the Board took L&I data on September 10, 2008, and, as before, filtered it to avoid double counting. For 2010, this process yielded an estimate of 433,535 for the full universe of carriers, brokers and freight forwarders.

The Board then adjusted the estimated full universe by the percentage of entities that had actually registered in each of the six brackets specified in the fee structure, compared to the number of entities that the Board had determined were potential registrants in each bracket. This approach yielded a total estimated population of 260,466 carriers, brokers and freight forwarders, as illustrated by the following table. This table contains the information in Figures 13 and 14 [10] from the Board's recommendation and provides the percentages used by the Board to adjust its population estimates.

[9] Pursuant to 49 CFR 390.19 Motor carrier identification report, a motor carrier must file its update of the MC–150 form every 24 months.

[10] See figures 13 and 14 as shown on page 8 of the April 3, transmittal.

TABLE 7—SUMMARY OF BOARD POPULATION ESTIMATE FOR 2010

Bracket		2008 Full universe (A)	2008 Registered (B)	2008 Percent (%) registered (C) = B/A	2010 Full universe (D)	2010 Population (E) = D x C
1	Brokers & Freight Forwarders	16,457	2,630	16.0	16,457	2,630
1	0–1	202,415	116,163	57.4	194,425	111,578
2	2–5	89,773	56,489	62.9	145,266	91,408
3	6–20	85,015	57,946	68.2	65,155	38,275
4	21–100	30,716	23,566	76.7	17,350	13,311
5	101–1,000	8,118	6,800	83.8	3,590	3,007
6	1,001–More	785	690	87.9	292	257
Totals		433,279	264,284		433,535	260,466

The Board's position in adopting this approach was that it was unreasonable to expect the States to register and collect fees from all potential registrants. Based on the historical registration experience, the Board also believed that this approach increased the likelihood of collecting the target revenues, although the approach was potentially vulnerable to under-collection if carriers registered in brackets different from those to which they would be expected to belong to, based on MCMIS. Industry representatives voiced concern over this approach, contending it benefited potential registrants who had been and continued to be noncompliant, while it increased the burden on compliant registrants.

5. Number of Fee Brackets

The Board recommended the same number of brackets for 2010 that it had recommended in 2007. The Board decided to use the maximum number of brackets allowed by statute, thereby reducing the range of fleet sizes within individual brackets. The Board revised the first bracket for 2010 from 0–2 to 0–1, to reflect the elimination of towed units (trailers) and similarly, the second bracket was changed from 3–5 to 2–5. The Board retained brackets 3 through 6 as they had been established in 2007.

6. Fee Levels for Each Bracket

As discussed above under Section IV.A.3. Revenue Target, the Board's target revenue figure with administrative costs and reserve for 2010 is $113,340,945. To determine how to allocate the total entitlement figure of $113,340,945 across the six brackets, the Board used a model that calculated (1) the number of entities in each bracket; (2) the revenues generated by each bracket at different fee amounts; (3) total revenues; and (4) any surplus or deficit from the $113,340,945 target figure. The Board also considered fairness in terms of fees per motor vehicle while assigning the fees for each bracket. This model is consistent with the one used in 2007, it ensures that the maximum fee per commercial motor vehicle in any given bracket would be no higher than the maximum fee per commercial motor vehicle in the next smaller bracket. The fees recommended by the Board range from a low of $83 for carriers in the lowest bracket (0 to 1 CMVs) to a high of $82,983 (the 1001-or-greater CMVs bracket). (See Table 3.) The Board estimated that this fee structure would generate $113,338,310 in revenues. This amount is slightly below the target figure, with a projected deficit of $2,635 for the UCR registration year 2010.[11]

B. The FMCSA Analysis

FMCSA's primary issues with the April 3 Board recommendation involve: (1) The need to recognize the revenue shortfalls caused by ''bracket shifting,'' *i.e.,* motor carriers registering in a fee bracket that is different from that reflected in MCMIS and (2) the number of motor carrier entities that could be expected to comply with the statute and register and the related issue of the States' level of enforcement.

1. Bracket Shifting

The UCR registration fees and fee brackets have been based on the assumption that motor carrier entities subject to UCR registration requirements will pay fees based on the number of vehicles (fleet size) reported in the motor carrier identification report (Form MCS–150). Under 49 CFR 390.19, this report is required to be filed with FMCSA and updated at least biennially. However, experience over three years has shown that a significant proportion of motor carriers are paying fees based on fleet sizes that are different than what would be expected from the fleet sizes reported to FMCSA. Empirical analyses prepared by or on behalf of a member of the Board have shown that the overall net effect of this bracket shifting by registering motor carriers has been a significant reduction in expected revenue (25.04 percent in 2008). Bracket shifting, which can be appropriate under the statute, occurs because available data sources used to develop the UCR fees and fee structures do not always accurately predict actual registrations.

On Form MCS–150, motor carriers are required to report separately the number of self-propelled vehicles (*i.e.,* power units) of various types and the number of towed vehicles (*i.e.,* trailers), if any, that are owned or leased by the carrier, and then total ''the number of each type of CMV that [it] uses in its U.S. operations.'' See instructions for item 26, Form MCS–150 at *http://www.fmcsa.dot.gov/documents/forms/r-l/MCS-150-Instructions-and-Form.pdf.* That information is compiled in MCMIS. The data, including the number of self-propelled and towed CMVs operated by motor carriers, was and is made available to the Board to enable it to develop its fees and fee bracket structure. The fees for the registration years 2007, 2008 and 2009 were developed by the Board on the assumption that each motor carrier that registered would pay a fee according to the bracket that is indicated by the number of vehicles owned and operated (both self-propelled and towed) reported in the MCMIS database. For 2010, because of the change in the applicable definition for CMV, the fleet sizes and applicable fees will be determined only by the number of self-propelled CMVs.

There are several ways that a motor carrier entity can determine its fleet size. Fees charged to a registering motor carrier or freight forwarder ''shall be based on the number of commercial motor vehicles owned or operated * * *'' (49 U.S.C. 14504a(f)(1)(A)(i)). A

[11] A deficit arises when rounding is not applied to the fees, otherwise the total revenue equals $113,354,360, which leads to a surplus of $13,415.

CMV is ''owned or operated'' by the motor carrier or freight forwarder if, during the registration year, it is either registered under Federal or State law (or both) or controlled under a ''long term lease'' (49 U.S.C. 14504a(f)(2)). The UCR Plan has determined that a lease of a CMV must be for more than 30 days to be considered a long term lease. See *http://www.ucr.in.gov/MCS/2009%20UCR%20Instruction%20Sheet.doc.* However, FMCSA requires that all leased vehicles, long term or otherwise, be reported on the MCS–150.

A registering motor carrier or freight forwarder then has the option of basing the number of CMVs owned or operated on either (1) the number reported on its most recently filed MCS–150; or (2) the total number owned or operated for the 12-month period ending on June 30 of the year preceding the registration year (49 U.S.C. 14504a(f)(3)). This number is determined, for either option, after excluding leased vehicles that are under lease terms of 30 days or less. *http://www.ucr.in.gov/MCS/2009%20UCR%20Instruction%20Sheet.doc.* A motor carrier may include in its calculation of fleet size ''any commercial motor vehicle'' (49 U.S.C. 14504a(f)(3)) and ''any self-propelled vehicle used on the highway in commerce to transport passengers or property for compensation regardless of the gross vehicle weight rating of the vehicle or the number of passengers transported by such vehicle'' (49 U.S.C. 14504a(a)(1)(B)). On the other hand, motor carriers and motor private carriers may elect not to include any CMV used ''exclusively in the intrastate transportation of property, waste, or recyclable material'' (49 U.S.C. 14504a(f)(3)).

Tables 8 and 9 below show the effect of bracket shifting in 2008. Table 8 shows the fee brackets that motor carriers selected when registering under the UCR Plan for 2008 and compares that to the brackets in which the carriers would have registered if the fleet size used was derived from MCMIS. Table 9 shows the revenue impacts of the brackets shifting in Table 8. A board member presented these tables to the Board during public meetings in June and July, 2009, and the tables have been placed in the docket.

TABLE 8—2008 UCR REGISTRATION

MCMIS Bracket	Paid bracket						
	1	2	3	4	5	6	Totals
1	107,277	7,109	1,617	94	6	0	116,103
2	18,732	33,518	4,002	108	5	0	56,365
3	6,132	10,390	40,086	1,191	18	2	57,819
4	1,092	1,026	5,968	15,264	174	0	23,524
5	253	112	429	1,714	4,265	21	6,794
6	45	4	19	50	182	388	688
Totals	133,531	52,159	52,121	18,421	4,650	411	261,293
Fees paid	$5,207,709	$6,050,444	$12,039,951	$14,847,326	$17,856,000	$15,412,500	$71,413,930

TABLE 9—REVENUE IMPACT 2008

MCMIS Bracket	Paid bracket						
	1	2	3	4	5	6	Totals
1	.....	$(547,393)	$(310,464)	$(72,098)	$(22,806)	.....	$(952,761)
2	$1,442,364	.....	(460,230)	(74,520)	(18,620)	.....	888,994
3	1,177,344	1,194,850	.....	(684,825)	(64,962)	$(74,538)	1,547,869
4	837,564	707,940	3,431,600	.....	(527,916)	.....	4,449,188
5	961,653	417,088	1,548,261	5,200,276	.....	(706,860)	7,420,418
6	1,685,745	149,536	708,111	1,834,700	6,126,120	.....	10,504,212
Revenue change	6,104,670	1,922,021	4,917,278	6,203,533	5,491,816	(781,398)	23,857,920

Note: Numbers in parentheses indicate a positive revenue impact whereas numbers not in parentheses indicate a negative revenue impact.

For example, of the 261,293 total number of carriers registered for 2008 (as of the date of the analysis in the above tables), 116,103 appeared to have fleet sizes from the MCMIS data that indicated that they should have registered in the lowest UCR fee bracket. However, almost 9,000 of those carriers registered in a higher bracket, for a net revenue gain of almost $1 million. On the other hand, 26,254 carriers registered in the lowest bracket (MCMIS Bracket 2–6, under Paid Bracket 1) although the MCMIS data indicated that they should be registered in a bracket with a higher fee. The net result was a revenue yield that was over $6.1 million less than expected. Similar patterns appear in the other brackets—some carriers are registering in higher brackets than expected—but significant numbers of carriers registered in lower brackets. For registration year 2008, as Table 9 shows, the net reduction in the expected revenue caused by bracket shifting was $23,857,920. This represented about a 25.04 percent shortfall in the expected revenues for 2008.

This amount was a substantial portion of the total revenue shortfall of $31,159,905 experienced by the UCR Plan for registration year 2008. Shortfalls in 2007 and 2009 were apparently due to a similar phenomenon. In order to fulfill the statutory objective of ensuring that the revenues derived from the fees are sufficient to provide the revenues to

which the participating States are entitled (see 49 U.S.C. 14504a(f)(1)(E)(i)), it appears to FMCSA that an adjustment needs to be applied to the current fees to recognize the occurrence of bracket shifting.

2. Compliance and Enforcement

Another factor affecting the revenues derived from the UCR registration fees is the difficulty that participating States have in registering all of the motor carrier entities that appear in the FMCSA MCMIS database. Filtering that data in order to identify activity, the Board and FMCSA based the initial fees established in 2007 on the expectation that 365,273 motor carrier entities were active and would register (Fees for Unified Carrier Registration Plan and Agreement NPRM, 72 FR 29472, 29475, May 29, 2007). In the April 3 submission, the Board developed an estimated total of 433,535 entities that would be active in 2010 by updating its activity indicia. However, the formal recommendation posited that only 260,466 of those entities would register for 2010, a relatively low level of compliance. The proposal supported by the motor carrier industry representatives, on the other hand, posited that all 433,535 of these entities would register for 2010, even though during the past three years the UCR Plan has never achieved 100 percent compliance. See Table 2.

The reason for and solutions to this level of compliance is a matter of significant disagreement between the States and industry representatives on the Board. States have taken the position that low compliance is due to limitations in the MCMIS data that prevent identification of the appropriate active population, combined with industry reluctance to register. Industry representatives have taken the position that insufficient State enforcement activities are to blame.

FMCSA believes that, though no realistic level of enforcement would lead to 100 percent compliance, increased enforcement efforts on the part of the participating States will be able to increase compliance rates to a significant degree. FMCSA requests public comment on the reasons for the low level of compliance. FMCSA also requests public comment on potential solutions to determining the reasonableness of the compliance and enforcement efforts by the States, including how they would support a reasonable adjustment in the current fees.

3. The Board's Response to FMCSA Concerns: Alternative Proposals

In response to FMCSA concerns regarding the April 3 fee recommendation, the Board's Revenue and Fee Subcommittee considered two alternative fee proposals taking into account FMCSA's principal areas of concern: Appropriate population definition, compliance rates, and bracket shifting. These proposals relied upon a carrier population of 433,535, and used the current bracket structure. Both proposals included a compliance factor, which indicated that it would be reasonable to expect 90 percent of motor carrier entities in the participating States to register, and 80 percent of the entities in non-participating States to register. This factor has been named the Registration Percentage Reasonableness, or RPR Factor.

The ten non-participating jurisdictions receive no revenues from the UCR Plan, and thus have little motivation to devote resources to enforcement of the UCR registration. Entities from those States engaged in interstate transportation activities can only be subject to possible enforcement if they conduct operations in a participating State. Data reviewed by FMCSA indicates that only about 40 percent of motor carrier entities in non-participating States are registering with the UCR Plan.

The first alternative proposal (Table 10) assumed that the historical trend of revenue shortfall caused by bracket shifting would continue in 2010 at the 2008 rate. The second proposal (Table 11) assumed that the bracket shifting rate for 2010 would be about half of the 2008 rate. This assumption was based on the fact that, under the new definition of CMV, 2010 fleet sizes are estimated to approximate one-half of the prior years' fleet sizes. The development of these proposals was set out in the presentation made to the Board on July 9, 2009, which has been placed in the docket for this rulemaking.

Applying these adjustments produced fees shown in the following two tables:

TABLE 10—ALTERNATIVE FEE PROPOSAL FOR 2010 (NO. 1)

Bracket	Number of commercial motor vehicles owned or operated by exempt or non-exempt motor carrier, motor private carrier, or freight forwarder	Fee per entity for exempt or non-exempt motor carrier, motor private carrier, or freight forwarder	Fee per entity for broker or leasing company
B1	0–2	$99	$99
B2	3–5	295	.....
B3	6–20	587	.....
B4	21–100	2,047	.....
B5	101–1,000	9,754	.....
B6	1,001 and above	95,250	.....

TABLE 11—ALTERNATIVE FEE PROPOSAL FOR 2010 (NO. 2)

Bracket	Number of commercial motor vehicles owned or operated by exempt or non-exempt motor carrier, motor private carrier, or freight forwarder	Fee per entity for exempt or non-exempt motor carrier, motor private carrier, or freight forwarder	Fee per entity for broker or leasing company
B1	0–2	$83	$83
B2	3–5	246	
B3	6–20	490	
B4	21–100	1,709	
B5	101–1,000	8,141	
B6	1,001 and above	79,500	

The FMCSA fee proposal described below in Section V is derived from the fee and fee bracket structure set forth in Table 10.

V. The FMCSA Fee Proposal

FMCSA and the Board are required to consider the factors established by statute and laid out in detail in Section II, Statutory Requirements for UCR Fees, above. In addition, FMCSA is required to base its fee determination on the Board's recommendation. This requirement does not, however, obligate FMCSA to adopt the Board's recommendation without modification. To the contrary, FMCSA has an independent responsibility to ensure that any fees it sets meet the statutory requirements set forth at 49 U.S.C. 14504a.

In discharging its statutory duty, FMCSA carefully examined the Board's entire fee recommendation, including the methodology and specific findings of the Board. FMCSA also independently considered the factors specified in SAFETEA–LU, and utilized data and analysis provided by the Board in its fee recommendation, as well as data from other sources. FMCSA does not propose to set the fee contained in the Board's April 3 recommendation because FMCSA believes that it does not meet the statutory requirements. FMCSA has developed a proposal based on the alternative proposal shown in Table 10, above.

A. Adjustment for Change in CMV Definition

The alternative proposals started with the revenue requirement, calculated (as described above) to be $113,340,945, and then estimated the maximum revenue that would be collected, taking into account the change to the definition of CMV that includes power units only. Table 12, below, shows this calculation for a population close to, but not exactly the same as, the full population. Multiplying the number of motor carrier entities in each bracket by the fees per entity yields the total revenues for each bracket, as shown in the third column from the left. Summing across all six brackets yields the maximum total revenue that could be collected in 2010 (assuming full compliance and no bracket shifting). This amount would be just over $70 million, well short of the $113 million revenue requirement.

The elimination of trailers from the definition of CMV reduces many carriers' fleet sizes, causing some of them to drop into a lower bracket and, consequently pay less. Thus, even with full compliance and no bracket shift, existing fees would be inadequate and would have to be increased to meet each State's revenue requirement.

According to the alternative proposals, increasing each fee by a factor of 1.617905 would raise revenues to $113 million after the change in the CMV definition, all other things being unchanged. This adjustment is shown in the final two columns on the right—the fees have been increased by a factor of almost 1.618, and the totals for the brackets are shown to total the $113 million revenue requirement.

TABLE 12—DERIVATION OF FEES NEEDED TO GENERATE THE FULL REVENUE REQUIREMENT WITH 100% COMPLIANCE AND NO BRACKET SHIFT

Bracket	Current fee	Carriers	Revenue	Current fees times 1.618	Revenue
0–2	$39	267,144	$10,418,616	$63	$16,830,072
3–5	116	76,499	8,873,884	188	14,381,812
6–20	231	56,321	13,010,151	374	21,064,054
21–100	806	17,260	13,911,560	1,304	22,507,040
101–1000	3,840	3,513	13,489,920	6,213	21,826,269
1001+	37,500	276	10,350,000	60,671	16,745,196
Total		421,013	70,054,131		113,354,443

Because these calculations exclude any consideration of the effect of either compliance or bracket shift, they show an unrealistically high collection of revenue. The fees would have to be set higher in order to overcome these additional factors affecting overall revenue. However, it is also clear, as even the motor carrier industry interests recognize, that an increase of more than 61 percent is necessary just to account for the statutory change.

B. Registration Percentage Reasonableness (RPR) Factor

In response to FMCSA concern that the Board's recommendation did not take into account improved enforcement activities, the alternative proposals included a goal of 90 percent

compliance by motor carrier entities based in participating States. For entities in the non-participating States, however, the alternative proposals did not consider a compliance target of 90 percent to be feasible. Because those States do not receive revenues through the UCR system, they do not have the incentive to exert effort on enforcement; and compliance rates could well remain low. For this reason, the alternative proposals used a lower goal of 80 percent compliance for registration by entities in the non-participating States.

While FMCSA acknowledges that 100 percent compliance may not be feasible, it agrees with the concept of setting fees based on an assumption of significantly improved compliance and enforcement activities. This concept represents a reasonable compromise between fairness to compliant carriers, giving incentives to States to improve enforcement, and maximizing the chance of meeting the States' revenue requirements.

FMCSA, however, believes that the compliance target included in the alternative proposals for carriers in non-participating States is unrealistically high in light of the limited leverage that the participating States have over enforcement beyond their borders. Recent data compiled by FMCSA shows compliance rates of approximately 40 percent among carriers based in non-participating States. FMCSA considers a target of 59 percent in non-participating States to be more reasonable. FMCSA believes that if participating States improve their roadside enforcement activities, they will be able to capture potential registrants from non-participating States when they cross borders into participating States. Based on data provided by the Board, FMCSA has determined that currently, only 28 of the 41 participating States, or just over two-thirds, actively engage in roadside enforcement. If all 41 participating States actively conducted roadside UCR enforcement at the same level conducted by the 28 participating States, FMCSA believes that such increased use of this enforcement tool would improve compliance rates among carriers from the non-participating States. FMCSA estimates that the current 40 percent compliance rate by carriers in non-participating States might reasonably be expected to improve to (41/28) * 40 percent, or 59 percent.

As shown in Table 13, the alternative proposals combined the assumptions of 90 and 80 percent compliance in participating and non-participating States respectively, to generate a weighted average projected compliance rate of 88.85 percent. This table also shows the effects of FMCSA's adjusted compliance rate of 59 percent in the non-participating States. The FMCSA proposal produces a weighted average projected compliance rate of 86.42 percent.

TABLE 13—REGISTRATION PERCENTAGE REASONABLENESS (RPR) FACTOR

	Approximate recent population	Board's estimated RPR	Board's projected registrations	FMCSA's estimated RPR	FMCSA's projected registrations
Participating States	383,000	90%	344,700	90%	344,700
Non-Participating States	50,000	80%	40,000	59%	29,500
Total	433,000	88.85%	384,700	86.42%	374,200

C. Shortfall Adjustment Factor

Factoring in both the change in definition of CMV and the RPR, the first alternative proposal calculated the maximum revenue to be only 88.85 percent of $70,054,131, or $62,239,770, a loss of $7,814,351 and considerably less than the $113,340,945 revenue requirement. The effect of bracket shift, calculated at its 2008 rate, would be to reduce the maximum $70,054,131 revenue by 25.04 percent for a loss of $17,541,552. Subtracting both the RPR and bracket shift factors from the maximum anticipated revenue of $70,054,131 yields a reduced maximum anticipated revenue totaling $44,698,218.

To determine an appropriate fee increase that would remedy the shortfall, the alternative proposal then divided the maximum adjusted anticipated revenue ($44,698,218) into the revenue requirement ($113,340,945). This produced a shortfall adjustment factor of about 2.54. Multiplying this factor by the current fees for each bracket yielded a set of fees with a maximum of $99 per CMV.

TABLE 14—DERIVATION OF FEE FOR ALTERNATIVE PROPOSAL

Bracket	Number of CMVs	Current fee	Current fee times 2.54
1	0–2	$39	$99
2	3–5	116	295
3	6–20	231	587
4	21–100	806	2,047
5	101–1,000	3,840	9,754
6	1,001 and above	37,500	95,250

The second alternative proposal included the same analysis set forth above, but with a 12.52 percent bracket shift factor (instead of 25.04 percent). This was based on the assumption that the bracket shifting rate for 2010 would be about half of the 2008 rate. This assumption was based on the fact that, under the new definition of CMV, 2010 fleet sizes are estimated to be approximately one-half of the prior years' fleet sizes, leaving out trailers and the data uncertainties associated with them. However, FMCSA does not believe that the Subcommittee provided convincing support or justification for this assumption.

D. FMCSA Adjustments

FMCSA agrees with the basic principles of this alternative fee proposal, but makes several adjustments. First, as discussed in Section V.B., above, the Agency's proposal adjusts the RPR factor and resulting compliance rate slightly—from 88.85 percent to 86.42 percent—to reflect the difficulty of increasing compliance in non-participating States.

Second, the Agency's proposal is based on a reconsideration of the effects of increasing the compliance rate. The alternative proposal's calculations assume that registering 88.85 percent of carriers would mean bringing in 88.85 percent of revenue. However, compliance rates measured as a percentage of carriers will not be directly proportional to revenues. This is because carriers with different fleet sizes pay different fees, and compliance rates vary by carrier size. As shown below, increasing revenue collection to 88.85 percent of the maximum available revenue would represent only a small increase from existing levels and would not reflect the effect that projected increased compliance levels of 80 or 90 percent of carriers would have on revenue. To address this issue, FMCSA developed a proposal that calculates the effect of increased registration rates on revenue collection.

The FMCSA proposal starts by estimating the total revenue that the existing UCR fee structure would bring in if there were (1) 100 percent participation using the 2010 carrier population; (2) no change in the definition of CMVs; and (3) no bracket shift. This estimate is made by multiplying the current fee for each bracket by the total number of active carriers in the MCMIS data base falling into that bracket, based on the previous CMV definition (which included both power units and trailers). Freight forwarders and brokers are included in the first bracket. Summing the products across all six brackets yields $123,964,113 in revenue, as shown in Table 15.

TABLE 15—CALCULATION OF MAXIMUM REVENUE AT EXISTING FEES

Bracket	Active carriers (MCMIS)*	Current fee per entity	Maximum revenue by bracket
1**	218,829	$39	8,534,331
2	89,773	116	10,413,668
3	85,058	231	19,648,398
4	30,716	806	24,757,096
5	8,118	3,840	31,173,120
6	785	37,500	29,437,500
Total	433,279	.....	123,964,113

* Population scaled down from 433,322 to the 2008 estimate of 433,279.
** Includes brokers and freight forwarders.

This amount represents the most that the UCR Plan could generate if no changes were made to the existing fees. (Note that this total is greater than the revenue target of $113,340,945, because the bracket and fee structure was originally developed assuming a somewhat smaller active population.)

Starting with this maximum revenue ($123,964,113), FMCSA then estimated the effects of bracket shifting. Assuming that bracket shifting reduces revenue collection across the spectrum by the same 25.04 percent calculated for registered carriers, FMCSA found that the maximum revenue would be $123,964,113 * (100 percent − 25.04 percent), which is $92,923,499. The actual amount of revenue collected in 2008 was $76,617,155, which is about 82.5 percent of the adjusted maximum revenue after bracket shifting is taken into account. The difference between these two amounts, $16,306,344, is the estimated loss of revenue resulting from non-compliance. FMCSA believes that some portion of this lost revenue could be recovered by increasing the compliance rate.

The FMCSA proposal estimates the amount that could be recovered by comparing the current compliance rate to the RPR developed for the alternative proposals and modified by FMCSA. The compliance in 2008 was 270,794 registrants out of a total population of 433,279, for a rate of 62.50 percent. (Note that this rate is considerably lower than the rate of revenue collection which was 82.5 percent of the maximum revenue available after the effect of bracket shift. This difference is due to the greater compliance rate of larger entities, which raises revenue collections disproportionately.) A compliance rate of 62.50 percent leaves 37.50 percent noncompliance. Raising the compliance rate to 86.42 percent assumes that most of the current noncompliant carriers would register. The increase from 62.50 percent compliance to 86.42 percent would mean capturing 63.79 percent of all non-compliant carriers. (The increase in compliance by 23.92 percentage points out of the total of 37.50 percent noncompliant carriers would mean that the improvement in compliance would represent 23.92/37.50 or 63.79 percent of all noncompliant carriers.)

The next step in FMCSA's approach is to calculate how much of the $16,306,344 in lost revenues would be brought in by capturing 63.79 percent of the noncompliant carriers. This calculation is difficult to perform because FMCSA believes there is no data available that can predict with certainty the fleet sizes of the carriers that would be brought in to reach the RPR. Nonetheless, it is likely that, just as with the carrier population as a whole, the carriers that remain non-compliant despite increased enforcement efforts would have somewhat smaller fleet sizes. The new registrants captured as a result of increased enforcement efforts would have larger fleet sizes. Therefore, the percentage of currently uncollected revenues that would continue to remain uncollected even after enforcement efforts are improved would be smaller than the percentage of currently unregistered carriers that would still remain unregistered.

FMCSA does not know of any method to estimate with certainty the extent of this effect. However, it is reasonable to assume that the relationship between the percentage of uncollected revenues and the percentage of unregistered carriers after the increase in compliance will be similar to the relationship between the current percentage of uncollected revenues and current

percentage of unregistered carriers. Currently, (100 percent − 82.5 percent) or 17.5 percent of revenues are not being collected. The ratio of 17.5 percent in uncollected revenues to the 37.5 percent of carriers that are not registered is 0.468. As stated previously, with improved compliance, FMCSA believes that 63.79 percent of non-compliant carriers can be registered, leaving only 36.21 percent non-compliant. Multiplying 0.468 by 36.21 percent yields 17.0 percent, which is FMCSA's estimate of the percentage of currently uncollected revenues that will remain uncollected even after compliance improves (*i.e.,* even after registering 63.79 percent of currently noncompliant carriers). Thus, (100 percent − 17.0 percent) or 83.0 percent of the currently uncollected revenues are assumed to be recoverable when 63.79 percent of the currently noncompliant carriers are registered. Multiplying the $16,306,344 in currently uncollected revenues by 83.0 percent yields an increase of $13,543,247.

This increase in revenue, added to the $76,617,155 that was collected at current compliance rates, would bring collections to $90,160,402. However, this estimate does not take into account the change in the definition of CMV. Eliminating trailers from the carriers' fleet sizes caused many of them to drop to lower brackets, where they pay lower amounts. In the absence of a change in fees, revenue would drop significantly. FMCSA estimates the size of this drop by comparing the maximum revenue available from the existing population, as recorded in MCMIS using the new CMV definition, to the maximum revenue available using the old definition. Comparing the maximum revenue derived using the new definition of CMV and the 2010 population ($70,018,681) with the maximum revenue derived using the old definition ($123,964,113) produces a ratio of 0.5648. Applying this factor to the figure we derived earlier by taking into account the RPR and bracket shifting ($90,160,402) results in estimated revenues of only $50,925,322 if the current fees were not increased. This revenue estimate, based on the 2008 population, would rise very slightly to $50,955,411 after scaling up by 433,535/433,279 to account for the slightly larger 2010 population. In other words, after factoring in the RPR and bracket shifting, FMCSA estimates that the Plan would only collect $50,955,411 if the fees are not adjusted.

This is far less than the revenue amount the States are entitled to receive by statute. Consequently, the FMCSA proposal includes an adjustment factor to remedy this shortfall. Dividing the revenue target ($113,340,945) by the estimated revenue based on current fees ($50,954,411) produces a shortfall adjustment factor of 2.22432. Applying this factor to the current fees yields FMCSA's proposed fee structure, as shown in Table 16.

TABLE 16—DERIVATION OF FEE FOR FMCSA PROPOSAL

Bracket	Number of CMVs	Current fee	2009 fee times 2.22432
1	0–2	$39	$87
2	3–5	116	258
3	6–20	231	514
4	21–100	806	1,793
5	101–1,000	3,840	8,541
6	1,001 and above	37,500	83,412

FMCSA believes that this proposal meets the statutory objective of ensuring that the fees are sufficient to provide the revenues to which the participating States are entitled. It is based on a reasonable estimate of the number of active motor carrier entities subject to the UCR fees. It adjusts the fees to reflect the statutory change in the applicable definition of commercial motor vehicle. It further adjusts the fees to recognize the historical occurrence of revenue shortfalls caused by bracket shifting. Finally, it establishes reasonable targets for compliance by the motor carrier industry to encourage enhanced enforcement efforts by the participating States.

VI. Regulatory Changes

In view of the foregoing, FMCSA is proposing to revise 49 CFR part 367 in several respects. First, current subpart A, which contains regulations implementing the provisions of now-repealed 49 U.S.C. 14504, would be removed in its entirety. Second, the heading of 49 CFR 367.20 would be changed to specify that the fees established would be applicable to registration years 2007, 2008 and 2009. Third, a new 49 U.S.C. 367.30 would establish the fees applicable to registration years beginning on January 1, 2010. A technical change is also being proposed in the headings to the fee tables to make clear that the fees are applicable to all entities that are required to register and pay fees to the UCR Plan.

VII. Regulatory Analyses and Notices

Executive Order 12866 (Regulatory Planning and Review) and DOT Regulatory Policies and Procedures

FMCSA has determined this proposed rule is a nonsignificant regulatory action within the meaning of Executive Order 12866 and the U.S. Department of Transportation's regulatory policies and procedures (DOT Order 2100.5 dated May 22, 1980; 44 FR 11034, February 26, 1979). The costs of this NPRM would not exceed the $100 million annual threshold as defined in Executive Order 12866. This rule is not economically significant based on the size of the additional fees to be collected under the UCR. The costs of the rule are required pursuant to an explicit Congressional mandate in SAFETEA–LU. Because a majority of the fees under the proposed rule are already being collected under the UCR system, the total cost of the proposed rule will be substantially less than $100 million per year. A major intent of the proposed rule is to eliminate the revenue shortfalls that the UCR system has experienced over the past several years; that shortfall was $38 million in 2008, for instance, and of similar magnitude in 2007 and 2009. This increase, though, will clearly be less than the $100 million threshold for a significant impact on the economy. The Agency has prepared a preliminary regulatory analysis analyzing the rule. A copy of the preliminary analysis document is included in the docket referenced at the beginning of this notice.

Regulatory Flexibility Act

The Regulatory Flexibility Act (RFA), as amended by the Small Business Regulatory Enforcement and Fairness Act (SBREFA), (5 U.S.C. 601–612), requires Federal agencies to analyze the impact of rulemakings on small entities, unless the agency certifies the proposed rule will not have a significant economic impact on a substantial number of small entities. FMCSA has determined that the fees being proposed in this rule would affect large numbers of small entities because the proposed rule sets fees for hundreds of thousands of carriers of all sizes, and small entities are defined to include all entities that are not dominant in their industries. In previous rulemakings, FMCSA identified for-hire carriers with fewer than 145 power units (*i.e.,* trucks or tractors) as small. Thus, all of the for-hire carriers in Brackets 1 through 4 would be considered small, as would many of those in Bracket 5.

After careful consideration, however, FMCSA has determined that, in every case involving a viable small entity, the recommended UCR fee will be well below the threshold level of one percent of revenues used for determining significant impacts. This conclusion is based on the observation that the maximum fee per vehicle is $87, which is less than one percent of the $14,500 annual salary of even a single employee working 40 hours per week for 50 weeks per year and earning the current Federal minimum wage of $7.25.[12] Because an entity without sufficient revenues to pay even one employee per vehicle would not be viable, it is clear that the recommended UCR fees will not reach the threshold of one percent of revenues. Thus, FMCSA certifies that the rule will not have a significant economic impact on a substantial number of small entities.

Unfunded Mandates Reform Act of 1995

The Unfunded Mandates Reform Act of 1995 (Pub. L. 104–4; 2 U.S.C. 1532) requires each agency to assess the effects of its regulatory actions on State, local, and tribal governments and the private sector. Any agency promulgating a final rule likely to result in a Federal mandate requiring expenditures by a State, local, or tribal government, or by the private sector of $136.1 million or more in any one year, must prepare a written statement incorporating various assessments, estimates, and descriptions that are delineated in the Act. FMCSA has preliminarily determined that this proposal would not have an impact of $136.1 million or more in any one year.

Executive Order 12988 (Civil Justice Reform)

This proposed rule meets applicable standards in sections 3(a) and 3(b)(2) of Executive Order 12988, Civil Justice Reform, to minimize litigation, eliminate ambiguity, and reduce burden.

Executive Order 13045 (Protection of Children)

FMCSA has analyzed this proposed action under Executive Order 13045, Protection of Children from Environmental Health Risks and Safety Risks. We have determined preliminarily that this rulemaking would not create an environmental risk to health or safety that would disproportionately affect children.

Executive Order 12630 (Taking of Private Property)

This proposed rule would not affect a taking of private property or otherwise have taking implications under Executive Order 12630, Governmental Actions and Interference with Constitutionally Protected Property Rights.

Executive Order 13132 (Federalism)

This proposed rule has been analyzed in accordance with the principles and criteria contained in Executive Order 13132. FMCSA has preliminarily determined that this rulemaking would not have a substantial direct effect on States, nor would it limit the policy-making discretion of the States. Nothing in this proposal would preempt any State law or regulation. As detailed above, the UCR Board of Directors includes substantial State representation. The States have already had notice of this action and opportunity for input through their representatives. FMCSA also requests comments on any substantial direct effect on the States as outlined in Executive Order 13132.

Executive Order 12372 (Intergovernmental Review)

The regulations implementing Executive Order 12372 regarding intergovernmental consultation on Federal programs and activities do not apply to this program.

Paperwork Reduction Act

The Paperwork Reduction Act of 1995 (44 U.S.C. 3507(d)) requires that FMCSA consider the impact of paperwork and other information collection burdens imposed on the public. We have determined that there are no current new information collection requirements by FMCSA associated with this proposed rule.

National Environmental Policy Act

The agency analyzed this rule for the purpose of the National Environmental Policy Act of 1969 (NEPA) (42 U.S.C. 4321 *et seq.*) and determined under our environmental procedures Order 5610.1, issued March 1, 2004 (69 FR 9680), that this action is categorically excluded (CE) under Appendix 2, paragraph 6.h of the Order from further environmental documentation. The CE under Appendix 2, paragraph 6.h relates to establishing regulations and actions taken pursuant to the regulations implementing procedures to collect fees that will be charged for motor carrier registrations and insurance.

We have also analyzed this rule under the Clean Air Act, as amended (CAA), section 176(c) (42 U.S.C. 7401 *et seq.*), and implementing regulations promulgated by the Environmental Protection Agency. Approval of this action is exempt from the CAA's General Conformity requirement since it involves policy development.

Executive Order 13211 (Energy Effects)

FMCSA has analyzed this proposed rule under Executive Order 13211, Actions Concerning Regulations That Significantly Affect Energy Supply, Distribution, or Use. We have determined preliminarily that it would not be a ''significant energy action'' under that Executive Order because it would not be likely to have a significant adverse effect on the supply, distribution, or use of energy.

List of Subjects in 49 CFR Part 367

Commercial motor vehicle, Financial responsibility, Motor carriers, Motor vehicle safety, Registration, Reporting and recordkeeping requirements.

For the reasons discussed in the preamble, the Federal Motor Carrier Safety Administration proposes to amend title 49 CFR chapter III, subchapter B, part 367 as follows:

PART 367—STANDARDS FOR REGISTRATION WITH STATES

1. Revise the authority citation for part 367 to read as follows:

Authority: 49 U.S.C. 13301, 14504a; and 49 CFR 1.73.

[12] The Fair Labor Standards Act (FLSA) establishes minimum wage, overtime pay, recordkeeping, and youth employment standards affecting employees in the private sector and in Federal, State, and local governments. Covered nonexempt workers are entitled to a minimum wage of not less than $7.25 per hour effective July 24, 2009. *http://www.dol.gov/esa/whd/flsa/*

Subpart A—[Removed and Reserved]

2. Remove and reserve subpart A, consisting of §§ 367.1 through 367.7 and Appendix A to subpart A.

Subpart B—Fees Under the Unified Carrier Registration Plan and Agreement

3. Amend subpart B by revising the heading of § 367.20 to read as follows:

§ 367.20 Fees Under the Unified Carrier Registration Plan and Agreement for Registration Years 2007, 2008 and 2009.

* * * * *

4. Add § 367.30 to subpart B to read as follows:

§ 367.30 Fees under the Unified Carrier Registration Plan and Agreement for Registration Years Beginning in 2010.

FEES UNDER THE UNIFIED CARRIER REGISTRATION PLAN AND AGREEMENT FOR EACH REGISTRATION YEAR

Bracket	Number of commercial motor vehicles owned or operated by exempt or non-exempt motor carrier, motor private carrier, or freight forwarder	Fee per entity for exempt or non-exempt motor carrier, motor private carrier, or freight forwarder	Fee per entity for broker or leasing company
B1	0–2	$87	$87
B2	3–5	258	
B3	6–20	514	
B4	21–100	1,793	
B5	101–1,000	8,541	
B6	1,001 and above	83,412	

Issued on: August 28, 2009.

Rose A. McMurray,

Acting Deputy Administrator.

[FR Doc. E9–21232 Filed 9–2–09; 8:45 am]

BILLING CODE 4910–EX–P

DEPARTMENT OF COMMERCE

National Oceanic and Atmospheric Administration

50 CFR Part 648

[Docket No. 0907021105–91234–02]

RIN 0648–AY00

Fisheries of the Northeastern United States; Atlantic Mackerel, Squid, and Butterfish Fisheries; Amendment 10

AGENCY: National Marine Fisheries Service (NMFS), National Oceanic and Atmospheric Administration (NOAA), Commerce.

ACTION: Proposed rule; request for comments.

SUMMARY: NMFS proposes regulations to implement measures in Amendment 10 to the Atlantic Mackerel, Squid, and Butterfish (MSB) Fishery Management Plan (FMP). Amendment 10 was developed by the Mid-Atlantic Fishery Management Council (Council) to bring the FMP into compliance with Magnuson-Stevens Fishery Conservation and Management Act (Magnuson-Stevens Act) requirements by establishing a rebuilding program that allows the butterfish stock to rebuild and permanently protects the long-term health and stability of the stock; and by minimizing bycatch and the fishing mortality of unavoidable bycatch, to the extent practicable, in the MSB fisheries. Amendment 10 would increase the minimum codend mesh size requirement for the *Loligo* squid (*Loligo*) fishery; establish a butterfish rebuilding program with a butterfish mortality cap for the *Loligo* fishery; establish a 72–hr trip notification requirement for the *Loligo* fishery; and require an annual assessment of the butterfish rebuilding program by the Council's Scientific and Statistical Committee (SSC). This proposed rule would also make minor, technical corrections to existing regulations.

DATES: Public comments must be received no later than 5 p.m., eastern standard time, on October 19, 2009.

ADDRESSES: A final supplemental environmental impact statement (FSEIS) was prepared for Amendment 10 that describes the proposed action and other considered alternatives and provides a thorough analysis of the impacts of the proposed measures and alternatives. Copies of Amendment 10, including the FSEIS, the Regulatory Impact Review (RIR), and the Initial Regulatory Flexibility Analysis (IRFA), are available from: Daniel Furlong, Executive Director, Mid-Atlantic Fishery Management Council, Room 2115, Federal Building, 300 South New Street, Dover, DE 19904–6790. The FSEIS/RIR/IRFA is accessible via the Internet at *http://www.nero.nmfs.gov*.

You may submit comments on this proposed rule, identified by RIN 0648–AY00, by any one of the following methods:

- Electronic Submissions: Submit all electronic public comments via the Federal e-Rulemaking portal *http://www.regulations.gov*;
- Fax: (978) 281–9135, Attn: Carrie Nordeen;
- Mail to Patricia A. Kurkul, Regional Administrator, NMFS, Northeast Regional Office, 55 Great Republic Drive, Gloucester, MA 01930. Mark the outside of the envelope ''Comments on MSB Amendment 10.''

Instructions: All comments received are a part of the public record and will generally be posted to *http://www.regulations.gov* without change. All Personal Identifying Information (e.g., name, address) voluntarily submitted by the commenter may be publicly accessible. Do not submit confidential business information or otherwise sensitive or protected information. NMFS will accept anonymous comments (enter N/A in the required fields if you wish to remain anonymous). Attachments to electronic comments will be accepted in Microsoft Word, Excel, WordPerfect, or Adobe PDF formats only.

Written comments regarding the burden-hour estimates or other aspects of the collection-of-information requirements contained in this proposed rule may be submitted to NMFS, Northeast Regional Office and to David Rostker by e-mail *David_Rostker@omb.eop.gov* or fax (202) 395–7285.

FOR FURTHER INFORMATION CONTACT: Carrie Nordeen, Fishery Policy Analyst, 978–281–9272, fax 978–281–9135.

SUPPLEMENTARY INFORMATION:

Background

This amendment is needed to bring the MSB FMP into compliance with

Magnuson-Stevens Act requirements by: (1) Implementing a rebuilding program that allows the butterfish stock to rebuild, and permanently protects the long-term health and stability of the stock; and (2) minimizing bycatch, and the fishing mortality of unavoidable bycatch, to the extent practicable, in the MSB fisheries.

In February 2005, NMFS notified the Council that the butterfish stock was overfished, which triggered Magnuson-Stevens Act requirements to implement rebuilding measures for the stock. In response, an amendment to the MSB FMP was initiated by the Council in October 2005. Management measures for rebuilding butterfish are designed to reduce the fishing mortality on butterfish that occurs through discarding of butterfish caught in other directed fisheries, which is the primary source of butterfish fishing mortality. Measures that reduce the discarding of butterfish are expected to also reduce the bycatch of other finfish species in MSB fisheries.

Initially, Amendment 9 to the MSB FMP was intended to bring the MSB FMP into compliance with Magnuson-Stevens Act bycatch requirements, and contained several management alternatives to address deficiencies in the FMP that related to discarding, especially as they affected butterfish. Amendment 9 considered management measures to reduce finfish discards by MSB fisheries by implementing mesh size increases in the directed *Loligo* fishery, removing mesh size exemptions for the directed *Illex* squid (*Illex*) fishery, and establishing seasonal gear restricted areas (GRAs). However, those specific management alternatives were developed in 2004, prior to the butterfish stock being declared overfished. On June 13, 2007, the Council recommended that all management measures developed as part of Amendment 9 to correct deficiencies in the FMP related to bycatch of finfish, especially butterfish, be considered in Amendment 10. Accordingly, no action was taken in Amendment 9 to address bycatch, and these alternatives were evaluated in Amendment 10.

The Council held three public meetings on Amendment 10 during June 2008. Following the public comment period that ended on June 23, 2008, the Council adopted Amendment 10 on October 16, 2008.

This action proposes management measures that were recommended by the Council as part of Amendment 10. If implemented, these management measures would:

- Establish a minimum mesh size increase to 2–1/8 inches (54 mm) (from 1–7/8 inches (48 mm)) for the *Loligo* fishery during Trimesters I (Jan - Apr) and III (Sep - Dec), starting in 2010;
- Establish a butterfish mortality cap program for the *Loligo* fishery, starting in 2011;
- Establish a 72–hr trip notification requirement for the *Loligo* fishery, to facilitate the placement of NMFS observers on *Loligo* trips, starting in 2011; and
- Require an annual assessment of the butterfish mortality cap program by the Council's SSC and, if necessary, implementation of additional butterfish rebuilding measures through the annual specifications process.

A Notice of Availability (NOA) for Amendment 10 was published on July 14, 2009. The comment period on Amendment 10 ends on September 14, 2009.

Proposed Measures

Minimum Codend Mesh Size Increase for the Loligo Fishery

The Magnuson-Stevens Act requires that conservation and management measures, to the extent practicable, minimize bycatch, and to the extent that bycatch cannot be avoided, minimize the mortality of such bycatch. Of the three active MSB fisheries (i.e., *Loligo*, *Illex*, and Atlantic mackerel), the discarding of non-target species, especially butterfish, is highest in the *Loligo* fishery. During 2001–2006, the *Loligo* fishery was responsible for the following percentages of observed discards: 68 percent of butterfish, 8 percent of scup, 56 percent of silver hake, 31 percent of red hake, 10 percent of spiny dogfish, 8 percent of striped bass, and 7 percent of summer flounder. To bring the MSB FMP into compliance with Magnuson-Stevens Act bycatch requirements, Amendment 10 considered minimum codend mesh size increases for the *Loligo* fishery from 1–7/8 inches (48 mm) to a range from 2–1/8 inches (54 mm) to 3 inches (76 mm).

Amendment 10 indicates that increases to *Loligo* codend mesh size would increase escapement of most non-target species in proportion to the size of the mesh increase. Increases in escapement of non-target species ultimately reduces discarding of non-target species. The largest reduction in bycatch would come from increasing the minimum mesh size to 3 inches (76 mm); less bycatch reduction would result from smaller mesh size increases (either 2–1/8 inches (54 mm) or 2–1/2 inches (64 mm)), or an increase that is only in effect for part of the year. Increased harvest effort to compensate for increased escapement of *Loligo* through the larger mesh is a potential effect of increasing mesh size, and has the potential to increase with mesh size.

Certain characteristics of the trawl gear used in the *Loligo* fishery result in an effective mesh size that is actually smaller than the specified codend mesh size. The codend's diamond-shaped mesh becomes constricted when towed under load stress and reduces the effective mesh size of the gear. Additionally, the cover (minium mesh size of 4–1/2 inches (11.43 cm)) used to strengthen the codend in this volume fishery creates a masking effect and may further reduce the effective mesh size. While the *Loligo* codend mesh size increase was originally proposed for general bycatch reduction in the MSB fisheries, a minimum codend mesh size increase could also aid in rebuilding the butterfish stock.

There are no published gear studies of *Loligo* selectivity; therefore, quantifying the *Loligo* retention effects associated with the different mesh sizes is difficult. Studies of other squid species suggest that squid, like fish, are size-selected by gear. However, *Loligo* growth studies suggest that *Loligo* retention has the potential to increase during the year, due to the rapid growth rate of squid. If *Loligo* escapement occurs, survival rates are unknown. As long as significant escapement mortality does not occur, increasing codend mesh size in the *Loligo* fishery is not anticipated to increase the harvest mortality on the *Loligo* stock, because harvesting would continue to be controlled by trimester quotas. Amendment 10 proposes a minimum codend mesh size increase for the *Loligo* fishery from 1–7/8 inches (48 mm) to 2–1/8 inches (54 mm). Of the mesh sizes considered in the amendment, a minimum mesh size increase to 2–1/8 inches (54 mm) is anticipated to result in the least additional escapement of bycatch and *Loligo*. However, larger mesh size increases were deemed impracticable by the Council.

When evaluating the effect of a *Loligo* minimum codend mesh size increase on butterfish rebuilding, the amendment concludes that only a codend mesh size increase to 3 inches (76 mm) would provide for escapement of juvenile butterfish and a portion of the spawning stock. Codend mesh size increases to less than 3 inches (76 mm) would facilitate escapement of some juvenile butterfish, but not many of the spawning stock. Therefore, as a stand-alone measure, a minimum codend mesh size increase to 2–1/8 inches (54 mm) for the *Loligo* fishery would be less

likely to both enable butterfish rebuilding and ensure the long-term sustainability of the butterfish resource, as compared to a minimum mesh size increase to 3 inches (76 mm).

Originally, the amendment considered a year-round minimum codend mesh size increase for the *Loligo* fishery. During public comment on the amendment, industry members expressed concern that economic effects associated with additional harvest effort due to a minimum codend mesh size increase during Trimester II (May-August) could be high because of *Loligo*'s reduced body size during that period, following summer spawning. Additionally, industry members commented that discarding was generally low during Trimester II. Analyses in the amendment support the industry's beliefs that discarding of butterfish and other finfish is low during Trimester II. For these reasons, Amendment 10 proposes that the minimum mesh size increase for the *Loligo* fishery only be in effect for Trimesters I and III. The *Loligo* quota allocated to Trimester II is only 17 percent of the annual quota, so even if the mesh size increase would not be in effect for Trimester II, it would still be in effect during the harvesting of over 80 percent of the quota.

Given the lack of gear selectivity information on *Loligo*, Amendment 10 proposes that the best way to comply with the Magnuson-Stevens Act requirement to minimize bycatch in MSB fisheries, to the extent practicable, is to proceed with a modest codend mesh size increase and then re-evaluate the effects of the minimum codend mesh size increase after the measure has been effective for 2 years. The evaluation would examine Northeast Fisheries Observer Program (NEFOP) catch rate data, before and after the mesh size increase, for both *Loligo* and non-target species, as well as any other new scientific information (e.g., gear selectivity information). The results of the evaluation would be used to maintain or revise minimum codend mesh size requirements for the *Loligo* fishery through the MSB specifications process.

Butterfish Rebuilding Program

Status of the Butterfish Stock

In 2004, the 38th Northeast Regional Stock Assessment Workshop (SAW–38) provided estimates of butterfish fishing mortality and stock biomass estimates through 2002, and determined that butterfish was overfished. Although the butterfish assessment stock size estimate was highly imprecise (80 percent confidence interval ranged from 2,600 mt to 10,900 mt), the overfished determination was based on the fact that the 2002 biomass estimate for butterfish (7,800 mt) was below the threshold level defining the stock as overfished (½ B_{MSY} =11,400 mt). The next butterfish stock assessment is scheduled for November 2009.

SAW–38 advised that rebuilding of the butterfish stock will be dependent upon increases in recruitment, which recently has been low to intermediate. Rebuilding is further complicated because the natural mortality rate of butterfish is high, butterfish have a short lifespan, and fishing mortality is primarily attributed to discards (discards have been estimated to equal twice the annual landings). Analyses have shown that the primary source of butterfish discards is the *Loligo* fishery because of the use of small-mesh, diamond codends (1–7/8–inches (48–mm) minimum codend mesh size) and the year-round, co-occurrence of butterfish and *Loligo*. Likely due to the lack of a market for butterfish and sporadic butterfish availability, there has not been a significant butterfish fishery since 2002 (recent annual landings have been 437–544 mt), resulting in the discard of both butterfish juveniles and spawning stock. In order to rebuild the butterfish stock, a reduction of the amount of butterfish discards and an increase in butterfish recruitment are both necessary.

Butterfish Rebuilding Projections

The Amendment 10 Fishery Management Action Team (FMAT) attempted to update the model used in the SAW–38 stock assessment to estimate recruitment and stock rebuilding for butterfish. However, because of limited data on the age composition of butterfish catch from 2002 to present, due to the absence of a directed fishery, it was not possible to update the model. Therefore, in consultation with the Council's SSC, the FMAT used an auto-regressive (AR) time-series model to forecast recruitment biomass for stock recovery. The AR model was used to forecast recruit biomass during 2007–2016; these forecasted recruitment data were used in a projection to determine if and when the butterfish stock would rebuild. To simulate a bycatch-only fishery (i.e., minimal directed fishing, discards as the primary source of fishing mortality), a fishing mortality rate (F) of 0.1 was found appropriate to project the biomass of butterfish during 2005–2016. Using an F of 0.1, and an estimate of long-term average recruitment, results from the AR model indicated that the butterfish stock could rebuild to above BMSY (22,800 mt) in 2007, and remain above the target level of BMSY during 2007–2016. While these projections suggest that the butterfish stock can rebuild quickly, they do not represent stock status and, like the SAW–38 butterfish stock biomass estimate, the projection estimates are likely highly imprecise.

Determination of Butterfish Quotas

The rebuilding program proposed in Amendment 10 specifies that, during the rebuilding period, quotas would be set through the specifications process and would conform to the following control rule: Allowable Biological Catch (ABC) would equal the yield associated with applying an F of 0.1 to the most current estimate of stock biomass. Butterfish stock status determinations and reference points status would be determined periodically through the SAW process. During years without updated SAW assessments, butterfish stock biomass would be annually estimated during the specifications process by updating the stock assessment model with current year data, including Northeast Fisheries Science Center survey data, NEFOP data, and landings data. The process for annually estimating the butterfish stock biomass would be documented in a technical summary report. Once the stock is determined to be rebuilt, ABC would be specified according to the fishing mortality control rule currently specified in the FMP (i.e., the yield associated with 75 percent FMSY). Initial Optimum Yield (IOY), Domestic Annual Harvesting (DAH) and Domestic Annual Processing (DAP) would continue to be specified as they are currently, with DAH equaling the amount available for landings after the deduction of estimated discards from ABC. This process may be modified to more explicitly account for scientific and management uncertainty in the Council's Omnibus Annual Catch Limit and Accountability Measure Amendment, expected to be implemented in 2011.

Butterfish Mortality Cap

As described previously, there has been no significant butterfish fishery since 2002. In the absence of a directed fishery, butterfish fishing mortality is primarily the result of discarding in other fisheries. The year-round co-occurrence of *Loligo* and butterfish results in over half of all observed butterfish discards occurring in the *Loligo* fishery. For this reason, Amendment 10 proposes that a mortality cap be set to control the amount of butterfish fishing mortality in

the *Loligo* fishery. Because the butterfish mortality cap would account for all butterfish caught by the *Loligo* fishery (discards as well as landings), the mortality cap is specified to equal 75 percent of the butterfish ABC. The remaining 25 percent of the butterfish ABC would be allocated for butterfish catch in other fisheries, including trips landing less than 2,500 lb (1.13 mt) of *Loligo*.

Harvesting in the *Loligo* squid fishery is currently regulated under a commercial quota, which is allocated by trimester (Jan-Apr; May-Aug; Sept-Dec). During each trimester, if *Loligo* landings are projected to reach a specified level, the directed *Loligo* fishery is closed, and vessels with *Loligo* permits are prohibited from landing more than 2,500 lb (1.13 mt) of *Loligo*. The butterfish mortality cap proposed in Amendment 10 would also require the closure of the directed *Loligo* fishery if the butterfish mortality cap is attained.

Amendment 10 indicates that the butterfish mortality cap would limit the fishing mortality on butterfish spawning stock and juveniles, thereby improving the likelihood of increasing recruitment and rebuilding and maintaining the butterfish stock. The amendment also concludes that the butterfish mortality cap for the *Loligo* fishery is the most effective measure to rebuild the butterfish stock, as it is currently the only way to directly control butterfish fishing mortality and allow for the reduction in butterfish bycatch that will promote rebuilding of the stock.

In addition to being an effective rebuilding measure for the butterfish stock, the butterfish mortality cap would provide the *Loligo* industry with incentives to reduce interactions with butterfish. During the development of Amendment 10, industry advisors indicated that they are able to prosecute the *Loligo* fishery with minimal associated bycatch of butterfish. Should modified fishing practices reduce interactions between the *Loligo* fishery and butterfish, then *Loligo* harvest may only be minimally affected by the butterfish mortality cap.

Since the *Loligo* quota is allocated by trimester, Amendment 10 proposes that the butterfish mortality cap for the *Loligo* fishery also be allocated by trimester. Observer data would be used to allocate the butterfish mortality cap to the trimesters based on butterfish bycatch rates in the *Loligo* fishery. Therefore, the butterfish mortality cap would be allocated to the *Loligo* fishery as follows: Trimester I - 65 percent; Trimester II - 3.3 percent; Trimester III - 31.7 percent.

Originally, Amendment 10 proposed that butterfish mortality caps would be monitored during all three *Loligo* trimesters, with closures of the *Loligo* fishery if the mortality cap was projected to be attained. However, based on input during public hearings, the Council modified this provision in Amendment 10. Amendment 10 would close the directed *Loligo* fishery during Trimesters I and III, if the butterfish mortality cap was harvested, but would not close during Trimester II. Because the butterfish mortality cap allocated to Trimester II is relatively small (3.3 percent of the total butterfish mortality cap) and butterfish bycatch during Trimester II has historically been low, closure predictions would be based on limited data and would be variable. To minimize uncertainty associated with closing the directed *Loligo* fishery during Trimester II, Amendment 10 proposes that the butterfish mortality cap be tracked during Trimester II, but that butterfish catch and the mortality cap for Trimester II be applied to Trimester III. Therefore, operationally, the butterfish mortality caps from Trimesters II and III would be combined, such that 35 percent of the total butterfish morality cap would be tracked during Trimester III. Additionally, any overages/underages from the butterfish mortality cap during Trimester I would be applied to Trimester III. As a precaution against exceeding the butterfish quota, Amendment 10 also proposes that closure thresholds be established for the butterfish mortality cap by trimester. Therefore, closures of the directed *Loligo* fishery would occur if 80 percent of the butterfish mortality cap for Trimester I was projected to be harvested, and/or if 90 percent of the cap for Trimester III was projected to be harvested. If Trimester II bycatch levels are high, reducing the butterfish mortality cap for Trimester III, the Council could recommend the in-season closure mechanism for Trimester II in future specifications. Exempting the *Loligo* fishery from a closure in response to butterfish bycatch during Trimester II is not expected to undermine the butterfish rebuilding program's ability to control the fishing mortality of butterfish, because all bycatch is tracked and applied to the butterfish mortality cap for Trimester III. As such, there should be no negative biological impacts related to the modification of this measure.

The butterfish mortality cap will be monitored by NMFS's Fishery Statistics Office (FSO). Butterfish catch data from observed trips with 2,500 lb (1.13 mt) or more of *Loligo* onboard will be applied to *Loligo* landings (2,500 lb (1,134 kg) or more) in the dealer database to calculate total butterfish catch in the *Loligo* fishery. When butterfish catch in the *Loligo* fishery is projected to reach the specified trimester closure thresholds, the directed *Loligo* fishery would close. The exact projection methodology will be developed by FSO, reviewed annually during the MSB specifications process, and be revised as appropriate.

While an industry-funded observer program was considered by the Council, analyses in Amendment 10 demonstrate that status quo levels of observer coverage would be sufficient for the purpose of administering the butterfish mortality cap. To facilitate the placement of observers on *Loligo* trips, Amendment 10 proposes a trip notification requirement. In order for a vessel to possess 2,500 lb (1.13 mt) or more of *Loligo*, a vessel representative would be required to phone NMFS to request an observer at least 72 hrs prior to embarking on a fishing trip. If the vessel representative does not make this required trip notification to NMFS, the vessel would be prohibited from possessing or landing more than 2,500 lb (1,134 kg) of *Loligo*. If a vessel is selected by NMFS to carry an observer, the vessel would be required to carry an observer (provided an observer is available) or the vessel would be prohibited from possessing or landing more than 2,500 lb (1,134 kg) of *Loligo*. If a trip is cancelled, a vessel representative would be required to notify NMFS of the cancelled trip (even if the vessel was not selected to carry an observer). If a vessel representative cancels a trip after its vessel was selected to carry an observer, that vessel would be assigned an observer on its next trip.

The SSC would annually review the performance of the butterfish mortality cap program during the specification process. The items considered by the SSC would include, but arenot limited to the: Coefficient of variation (CV) of the butterfish bycatch estimate; estimate of butterfish mortality; and status and trend of the butterfish stock. If the CV of the butterfish mortality estimate or another butterfish mortality cap performance parameter is found to be unacceptable by the SSC, NEFOP will be consulted to evaluate if observer coverage could be increased to acceptable levels. If increasing NEFOP coverage is not possible, the Council would next consider implementation of an industry funded observer program in a subsequent action. If increased observer coverage proves impractical or ineffective, the SSC could recommend

one or more of following for the upcoming fishing year:

(1) Modification to the *Loligo* quota;

(2) Modification to the butterfish quota;

(3) Increases to minimum codend mesh size for the *Loligo* fishery;

(4) Establishing GRAs; or

(5) Establishing any measure that could be implemented via the MSB specification process.

If the Council does not adopt the SSC recommendations, then NMFS would implement measures through the MSB annual specifications process to assure the rebuilding of the butterfish stock, consistent with existing MSB regulations at § 648.2(d)(2).

As previously described, in conjunction with the butterfish mortality cap, 25 percent of the butterfish ABC would be allocated for direct harvest and discard mortality in other fisheries. Butterfish landings and observed discards in other fisheries would be monitored by FSO, but would not result in fisheries closures. These data would be reviewed as part of the annual assessment of the performance of the butterfish mortality cap program during the specification process. If butterfish landings and observed discards in other fisheries are found to exceed the 25 percent of the butterfish ABC, then the allocation of the butterfish quota between the *Loligo* fishery and other fisheries would be revised, or other measures (e.g., reduced trip limits) would be implemented to constrain the other fisheries to 25 percent of the butterfish ABC.

The process for closing the directed butterfish fishing would be status quo (fishery closure at 80 percent of IOY). All butterfish landings would count against the butterfish quota to determine when the directed butterfish fishery is closed. Projected landings would be based on dealer data and would be monitored weekly. If the directed butterfish fishery is closed, vessels with *Loligo*/butterfish moratorium permits would be subject to the closure-related incidental trip limits set in the specifications.

Butterfish Rebuilding Program Timeline

Amendment 10 proposes a 5-year butterfish rebuilding program; the rebuilding program would extend from 2010 to 2014. Section 304(e) of the Magnuson-Steven Act specifies that rebuilding periods for overfished species be as short as possible, taking into account the biology of the stock and the needs of fishing communities. Butterfish rebuilding periods of 7 and 10 years were considered by the Council, but rejected because the biology of the stock allows for rapid rebuilding. Rebuilding periods of less than 5 years were rejected by the Council due to the potential for negative economic effects associated with a compressed rebuilding schedule. A 5-year rebuilding program is proposed to balance Magnuson-Stevens Act requirements while considering the biology of the stock and the needs of fishing communities. Even though the proposed butterfish rebuilding plan is a 5-year plan, the primary measures of the rebuilding plan, such as the butterfish mortality cap and minimum codend mesh size increase for the *Loligo* fishery, would need to be permanent to ensure long-term sustainability of the butterfish stock.

During Year 1 (2010) of the rebuilding program, the 2009 quotas would be maintained (ABC specification for butterfish at 1,500 mt; landings limited to 500 mt). Butterfish landings would be monitored and the butterfish fishery would be closed when landings are projected to reach 80 percent of the butterfish quota. Additionally, as described previously, the minimum codend mesh size requirement for the *Loligo* fishery would be increased from 1–7/8 inches (48 mm) to 2–1/8 inches (54 mm) during Trimesters I and III. The goal of the rebuilding plan during Year 1 would be to further butterfish rebuilding by keeping landings levels low, thereby discouraging a directed fishery, and by increasing some escapement of juvenile butterfish with a minimum codend mesh size increase up to 2–1/8 inches (54 mm). During Year 2 (2011) of the rebuilding program, in addition to management measures effective during Year 1 of the rebuilding plan, the butterfish mortality cap for the *Loligo* fishery would be implemented. The butterfish mortality cap for the *Loligo* fishery would directly control the butterfish landings and discards (of all ages) in the *Loligo* fishery, the primary source of butterfish fishing mortality, and facilitate rebuilding of the stock and protection of the rebuilt stock.

The rebuilding program in Amendment 10 is expected to rebuild the butterfish stock within the 5-year rebuilding period. This conclusion is supported by the SSC-reviewed AR model, which suggests that the butterfish stock is able to rebuild within 1 year, provided long-term average recruitment occurs and F is kept at 0.1. Assuming future butterfish recruitment is similar to butterfish recruitment seen during 1968–2002, implementing the butterfish mortality cap in 2011 achieves an 88–percent probability of at least one large recruitment event occurring during years 2–5 of the butterfish rebuilding period. If the butterfish mortality cap is implemented in 2010, then the probability of at least one large recruitment event occurring during years 1–5 of the rebuilding period rises to 94 percent. In other words, implementing the butterfish mortality cap in 2011, rather than 2010, increases the risk of failing to take advantage of a good recruitment event (from 6 percent to 12 percent).

The Council recommended the 5-year rebuilding timeline, in part, due to concerns that the SAW–38 stock estimate for 2002 would have to be used to set the butterfish mortality cap for 2010. Best available science suggests that the butterfish stock size has been highly variable during 1968–2002. Using the SAW–38 assessment data, the butterfish mortality cap for the *Loligo* fishery would be fairly low (approximately 580 mt for Trimester I, and 320 mt for Trimester III) and could result in closures of the *Loligo* fishery. If the butterfish mortality cap is set too low, given the current butterfish stock conditions, the measure could have unnecessarily severe economic effects on the *Loligo* fishery. Because a butterfish stock assessment is scheduled for November 2009, Amendment 10 proposes using the updated stock information when specifying a butterfish mortality cap for the *Loligo* fishery. A 2011 implementation of the butterfish mortality cap would allow the updated butterfish stock estimate to be used when setting the butterfish mortality cap, but the updated stock estimate would not yet be available when setting a butterfish mortality cap for 2010.

In addition, the rebuilding program specifies that the minimum codend mesh size increase for the *Loligo* fishery would be implemented prior to the butterfish mortality cap. Amendment 10 proposes using a weighted average of the current and the previous year's data for to track the butterfish mortality cap for the *Loligo* fishery. If the butterfish mortality cap were to be implemented in 2010, then 2009 data (i.e., data prior to the implementation of the mesh size increase) would be used to calculate the butterfish mortality cap. Because the mesh size increase is expected to increase the escapement of juvenile butterfish, the Council thought it inappropriate to use data from 2009, when much of the industry used a smaller minimum codend mesh size, to calculate/track the butterfish mortality cap harvested by a fishery required to use gear with a larger mesh size. By implementing the butterfish mortality cap in 2011, the data used to monitor the butterfish mortality cap would better

reflect the new 2–1/8–inch (54–mm) codend mesh size requirement.

Corrections

This proposed rule also contains minor corrections to existing regulations. These corrections would not revise the intent of any regulations; they would only clarify the intent of existing regulations by correcting technical errors. In § 648.48.13(a), transfer-at-sea requirements for squid and butterfish would be revised to omit references to a mackerel permit. In § 648.14(g)(2)(ii)(C), the reference to possession allowances would be corrected. In § 648.21(f)(1), the description of *Loligo* trimesters would be corrected. Lastly, in § 648.25(a), possession restrictions for mackerel would be revised to omit references to the butterfish fishery.

Public comments are being solicited on Amendment 10 and its incorporated documents through the end of the comment period, September 14, 2009, stated in the NOA for Amendment 10 (74 FR 33986). All comments received by September 14, 2009, whether specifically directed to Amendment 10 or this proposed rule, will be considered in the approval/disapproval decision on Amendment 10. Public comments must be received by September 14, 2009, to be considered in the approval/disapproval decision on the amendment. Comments received after 5 pm, eastern standard time, will not be considered in the decision to approve or disapprove Amendment 10. Public comments on this proposed rule must be received no later than 5 p.m., eastern standard time, on October 19, 2009.

Classification

Pursuant to section 304 (b)(1)(A) of the Magnuson-Stevens Act, NMFS has determined that this proposed rule is consistent with the FMP, other provisions of the Magnuson-Stevens Act, and other applicable law, subject to further consideration after public comment.

This proposed rule has been determined to be not significant for purposes of Executive Order 12866.

The Council prepared an FSEIS for Amendment 10; a notice of availability was published on July 2, 2009 (74 FR 31733). The FSEIS describes the impacts of the proposed Amendment 10 measures on the environment. The proposed measure to increase minimum codend mesh size from 1–7/8 inches (48 mm) to 2–1/8 inches (54 mm) for the *Loligo* fishery during Trimesters I (Jan-Apr) and III (Sep-Dec) would minimize bycatch and discards of non-target species to the extent practicable, including butterfish, an overfished species. Loss of revenue due to increased *Loligo* escapement associated with the mesh size increase would depend on the actual amount of *Loligo* escapement, but revenue loss would be mitigated because the mesh size increase would not be effective during Trimester II. The proposed measure to establish a butterfish mortality cap for the *Loligo* fishery would aid in the rebuilding of the butterfish stocks by directly controlling butterfish fishing mortality. If the butterfish mortality cap is attained and the *Loligo* fishery closes, bycatch of butterfish and other non-target species would be reduced. Loss of revenue is possible if the *Loligo* quota could not be harvested because the fishery was closed in response to butterfish bycatch. As the butterfish stock rebuilds and the butterfish mortality cap increases as the stock size increases, the likelihood of lost *Loligo* revenue associated with the butterfish mortality cap is expected to decrease. The requirement that vessels notify NMFS 72 hrs prior to embarking on a *Loligo* fishing trip is an administrative measure, but it is anticipated to have biological benefits by enhancing observer coverage of the *Loligo* fishery. The annual review of the butterfish mortality cap program is expected to have both biological and economic benefits by allowing new information (e.g., changes in stock estimates or bycatch rates) to be quickly incorporated into the management process for butterfish.

An IRFA was prepared, as required by section 603 of the Regulatory Flexibility Act (RFA). The IRFA describes the economic impact this proposed rule, if adopted, would have on small entities. A description of the action, why it is being considered, and the legal basis for this action are contained at the beginning of this section in the preamble and in the **SUMMARY** section of the preamble. A summary of the analysis follows. A copy of this analysis is available from the Council or NMFS (see **ADDRESSES**).

Description and Estimate of Number of Small Entities to Which the Rule Would Apply

The majority of participants in this fishery are small entities, as only 2 grossed more than $4 million annually; therefore, there are no disproportionate economic impacts on small entities. The proposed measures in Amendment 10 would primarily affect vessels that participate in the *Loligo* fishery. In 2009, there were 426 vessels issued *Loligo*/butterfish moratorium permits. Section 10.10.14 in Amendment 10 describes the vessels, key ports, and revenue information for the *Loligo* fishery; therefore, that information is not repeated here.

Description of Projected Reporting, Recordkeeping, and Other Compliance Requirements

This action proposes a trip notification requirement for the *Loligo* fishery. The rationale for and description of the measure is included in the preamble of this rule; therefore, that information is not repeated here. The phone call to NMFS to declare a *Loligo* fishing trip is expected to be less than 2 min in duration. If a vessel representative cancels a declared fishing trip, then a trip cancellation call to NMFS would also be required. The 426 vessels issued *Loligo* permits in 2009 averaged 12 *Loligo* trips per year; therefore, each of these permit holders could average about 12 calls per year. Assuming each trip could be cancelled, permit holders could also place an average of 12 additional calls per year. The estimated duration of the cancellation call is expected to be less than 1 min. The cost of these calls would vary, based on where the calls originated, but cost is expected to be minimal. This trip notification requirement does not duplicate, overlap, or conflict with any other Federal rules.

Economic Impacts of the Proposed Action Compared to Significant Non-Selected Alternatives

Some of the proposed measures (e.g., trip notification, minimum mesh size increase, annual assessment of butterfish mortality cap program) in Amendment 10 are expected to have economic impacts. A detailed economic analysis of the proposed measures, as well as the non-selected alternatives, is in Section 7.5.1 of Amendment 10.

Two of the proposed measures in Amendment 10 are not anticipated to have more than minimal economic effects on MSB fishery participants. The requirement that vessels notify NMFS 72 hrs prior to embarking on a *Loligo* fishing trip is an administrative measure to facilitate the placement of observers aboard the *Loligo* fleet. As described previously, the economic burden on fishery participants associated with this measure is expected to be minimal. This rule also proposes that the butterfish mortality cap be reviewed by the Council's SSC on an annual basis, and that modifications to the butterfish mortality cap be implemented through the MSB specifications process. This measure is also administrative and would have only minimal economic effects on fishery participants.

Implementing a 2–1/8–inches (54–mm) minimum codend mesh size requirement for the *Loligo* fishery is expected to have a larger economic effect on fishery participants than the no action alternative (maintaining the 1–7/8–inches (48–mm) minimum mesh size requirement), but less of an economic effect than implementing any of the other action alternatives (minimum mesh size requirements of 2–3/8 inches (60 mm), 2–1/2 inches (64 mm), or 3 inches (76 mm)). The factors considered in evaluating economic effects of the action alternatives are the cost of replacing a codend and the loss in revenue that may result from increased harvest effort due to *Loligo* escapement through the larger mesh. While the cost of replacing a codend may be substantial, fishery participants routinely replace codends and, as such, the cost of a codend with a larger minimum mesh size may not be a significant additional cost. Replacing a codend can cost approximately between $200 and $700, depending on the size of the net. Notifying fishery participants well in advance of regulatory changes may allow participants to plan purchases, thereby minimizing costs associated with a replacement codend. The cost of replacement codends is not anticipated to vary by mesh size among the action alternatives.

The loss of revenue associated with increased harvest effort due to *Loligo* escapement is difficult to quantify. There are no published gear studies of *Loligo* selectivity; therefore, quantifying the *Loligo* retention associated with the different mesh sizes is difficult. Studies of other squid species suggest that squid, like fish, are size-selected by gear. Given this, it could be expected that economic effects associated with the action alternatives increase with mesh size. Economic effects associated with an increased minimum mesh size for the *Loligo* fishery are mitigated because the mesh size increase would not be in effect during Trimester II (May-Aug). The rapid growth of *Loligo* may allow fishery participants to minimize *Loligo* escapement by shifting fishing effort to later in the year, when larger squid would have an increased retention rate.

Implementing a butterfish mortality cap for the *Loligo* fishery has the potential for greater economic effects on fishery participants than the no action alternative (no butterfish mortality cap). Under the action alternatives, the *Loligo* fishery would close when the butterfish mortality cap was harvested. If the *Loligo* fishery is closed in response to butterfish bycatch before the entire *Loligo* fishery is harvested, then a loss of revenue is possible. If the *Loligo* fishery can be prosecuted with minimal butterfish bycatch and without triggering the butterfish mortality cap, then there would be no economic differences between the no action and action alternatives. However, there may be additional costs associated with butterfish avoidance strategies. The potential for *Loligo* revenue loss would be dependent upon the size of the butterfish mortality cap. As described previously, the butterfish mortality cap is determined based on the level of butterfish abundance. As the butterfish stock rebuilds, the mortality cap would increase and the potential for lost *Loligo* revenue should decrease. When the butterfish stock rebuilds, a directed butterfish fishery could resume, provided discards were kept low, and would have economic benefits for fishery participants.

The economic effects on fishery participants between the action alternatives (butterfish mortality cap allocated by trimester in the same proportions as the *Loligo* quota, *Loligo* landings, or butterfish bycatch rates) is anticipated to be minimal. However, because the proposed action (butterfish morality cap based on butterfish bycatch rates) best approximates existing fishery conditions, by considering the ratio of butterfish caught to *Loligo* landed, it is anticipated that the proposed action would be less constraining on the *Loligo* fishery than the non-selected action alternatives, butterfish mortality caps based on only *Loligo* information. As described in Section 7.5.1. of the amendment, if the butterfish mortality cap is based on accurate assumptions about the size of the butterfish stock and butterfish bycatch rates by trimester, then potential *Loligo* revenue loss may be relatively small ($1.0 million), with maximum losses per vessel averaging 0.6 percent and ranging up to 4.1 percent. If assumptions about butterfish stock size and bycatch rates are incorrect, then potential *Loligo* revenue loss may be relatively large ($15.8 million), with maximum losses per vessel averaging 9.1 percent and ranging up to 65 percent. These ranges assume equal distribution of losses based on distributions of landings, but vessels with access to other fisheries may target those fisheries to mitigate lost *Loligo* revenue.

As a tool to minimize bycatch, Amendment 10 considered eliminating current exemptions from *Loligo* minimum mesh size requirements for the *Illex* fishery. There is no minimum codend mesh size requirement for vessels retaining *Illex*, but there is a 1–7/8–inch (48–mm) minimum mesh size requirement for vessels retaining *Loligo*. Because squid species can seasonally co-occur, during the months of June-September, the *Illex* fishery is exempt from the *Loligo* minimum mesh size requirement on the *Illex* fishing grounds (i.e., the area seaward of 50–fm (91.45–m) depth contour) where *Loligo* is less often present. Because the *Loligo* fishery accounts for more bycatch than the *Illex* fishery, the Council recommended maintaining the current exemption to the *Loligo* minimum mesh size requirement for the *Illex* fishery. The economic effects on fishery participants of maintaining the no action alternative are expected to be less than the economic effects associated with any of the action alternatives (*Illex* exemption during June-August, *Illex* exemption during June-July, discontinuation of *Illex* exemption). Similar to the economic effects associated with the proposed increase to the minimum mesh size for *Loligo*, costs to *Illex* fishery participants associated with any of the action alternatives would include replacement codends and increased harvesting effort due to *Illex* escapement. While the cost of replacing a codend may be substantial, fishery participants routinely replace codends and, as such, the cost of a codend with a larger minimum mesh size may not be a significant additional cost. Additionally, the rapid growth of *Illex* could allow fishery participants to minimize *Illex* escapement by shifting effort to later in the year, when larger squid would have an increased retention rate.

Lastly, Amendment 10 considered establishing GRAs to reduce butterfish discards in MSB fisheries. The action alternatives included four GRAs, to be effective during January-April, that varied by minimum codend mesh size requirements (i.e., 3 inches (76 mm) or 3–3/4 inches (96 mm)) and effective area (i.e., area accounting for 50 percent or 90 percent of MSB discards). Because the GRAs are limited in temporal and geographic scope, the Council concluded they were not a viable solution to butterfish discarding in MSB fisheries and did not recommend establishing butterfish GRAs (no action alternative). Establishing GRAs would likely have resulted in shifts in the distribution of fishing effort with biological effects that would be difficult to predict. Based on average annual revenue from trips that would be affected by GRAs, potential economic effects associated with the action alternatives per vessel ranged from revenue losses of $498,000-$559,000. However, given that fishing vessels are

flexible in their fishing practices, these losses would most likely not be fully realized.

This proposed rule contains a collection-of-information requirement subject to review and approval by the Office of Management and Budget (OMB) under the Paperwork Reduction Act (PRA). This requirement has been submitted to OMB for approval. Public reporting burden for a trip notification requirement for the *Loligo* fishery is estimated to average 3 min per response, including the time for reviewing instructions, searching existing data sources, gathering and maintaining the data needed, and completing and reviewing the collection information.

Public comment is sought regarding: Whether this proposed collection of information is necessary for the proper performance of the functions of the agency, including whether the information shall have practical utility; the accuracy of the burden estimate; ways to enhance the quality, utility, and clarity of the information to be collected; and ways to minimize the burden of the collection of information, including through the use of automated collection techniques or other forms of information technology. Send comments on these or any other aspects of the collection of information to NMFS, Northeast Regional Office at the **ADDRESSES** above, and to David Rostker by e-mail *David_Rostker@omb.eop.gov* or fax (202) 395–7285.

Notwithstanding any other provision of the law, no person is required to respond to, and no person shall be subject to penalty for failure to comply with, a collection of information subject to the requirements of the PRA, unless that collection of information displays a currently valid OMB control number.

List of Subjects in 50 CFR Part 648

Fisheries, Fishing, Recordkeeping and reporting requirements.

Dated: August 28, 2009

James W. Balsiger,

Acting Assistant Administrator For Fisheries, National Marine Fisheries Service.

For the reasons set out in the preamble, 50 CFR part 648 is proposed to be amended as follows:

PART 648—FISHERIES OF THE NORTHEASTERN UNITED STATES

1. The authority citation for part 648 continues to read as follows:

Authority: 16 U.S.C. 1801 *et seq.*

2. In § 648.13, paragraph (a) is revised to read as follows:

§ 648.13 Transfers at sea.

(a) Only vessels issued a *Loligo* and butterfish moratorium or *Illex* moratorium permit under § 648.4(a)(5) and vessels issued a squid/butterfish incidental catch permit and authorized in writing by the Regional Administrator to do so, may transfer or attempt to transfer *Loligo*, *Illex*, or butterfish from one vessel to another vessel.

* * * * *

3. In § 648.14, paragraph (g)(1)(iii) is added and paragraph (g)(2)(ii)(C) is revised to read as follows:

§ 648.14 Prohibitions.

* * * * *

(g) ***

(1) ***

(iii) *Observer requirements for Loligo fishery.* Fail to comply with any of the provisions specified in § 648.26.

* * * * *

(2) ***

(ii) ***

(C) Take, retain, possess or land mackerel, squid, or butterfish in excess of a possession allowance specified in § 648.25.

* * * * *

4. In § 648.21, paragraphs (a)(2) and (f)(1) are revised, and paragraphs (b)(3)(iii) and (b)(3)(iv) are added to read as follows:

§ 648.21 Procedures for determining initial annual amounts.

(a) * * *

(2) IOY, including RQ, DAH, DAP, butterfish mortality cap for the *Loligo* fishery, and bycatch level of the total allowable level of foreign fishing (TALFF), if any, for butterfish, which, subject to annual review, may be specified for a period of up to 3 years;

* * * * *

(b)* * *

(3) * * *

(iii) The butterfish mortality cap will be allocated to the *Loligo* fishery as follows: Trimester I - 65 percent; Trimester II - 3.3 percent; and Trimester III - 31.7 percent.

(iv) Any underages of the butterfish mortality cap for Trimesters I or II will be applied to Trimester III of the same year, and any overages of the butterfish mortality cap for Trimesters I and II will be applied to Trimester III of the same year.

* * * * *

(f) * * *

(1) A commercial quota will be allocated annually for *Loligo* squid into trimester periods based on the following percentages: Trimester I (January-April) - 43.0 percent; Trimester II (May-August) - 17.0 percent; and Trimester III (September-December) - 40.0 percent.

* * * * *

5. In § 648.22, paragraph (a)(5) is added to read as follows:

§ 648.22 Closure of the fishery.

(a)* * *

(5) NMFS shall close the directed fishery in the EEZ for *Loligo* when the Regional Administrator projects that 80 percent of the butterfish mortality cap is harvested in Trimester I and/or 90 percent of the butterfish mortality cap is harvested in Trimester III.

* * * * *

6. In § 648.23, paragraphs (a)(3) introductory text and (a)(3)(i) are revised to read as follows:

§ 648.23 Gear restrictions.

(a) * * *

(3) Owners or operators of otter trawl vessels possessing *Loligo* harvested in or from the EEZ may only fish with nets having a minimum mesh size of 2–1/8 inches (54 mm), during Trimesters I (Jan-Apr) and III (Sept-Dec), or 1–7/8 inches (48 mm), during Trimester II (May-Aug), diamond mesh, inside stretch measure, applied throughout the codend for at least 150 continuous meshes forward of the terminus of the net, or for codends with less than 150 meshes, the minimum mesh size codend shall be a minimum of one-third of the net measured from the terminus of the codend to the headrope, unless they are fishing consistent with exceptions specified in paragraph (b) of this section.

(i) *Net obstruction or constriction.* Owners or operators of otter trawl vessels fishing for and/or possessing *Loligo* shall not use any device, gear, or material, including, but not limited to, nets, net strengtheners, ropes, lines, or chafing gear, on the top of the regulated portion of a trawl net that results in an effective mesh opening of less than 2–1/8 inches (54 mm), during Trimesters I (Jan-Apr) and III (Sept-Dec), or 1–7/8 inches (48 mm), during Trimester II (May-Aug), diamond mesh, inside stretch measure. ''Top of the regulated portion of the net'' means the 50 percent of the entire regulated portion of the net that would not be in contact with the ocean bottom if, during a tow, the regulated portion of the net were laid flat on the ocean floor. However, owners or operators of otter trawl vessels fishing for and/or possessing *Loligo* may use net strengtheners (covers), splitting straps, and/or bull ropes or wire around the entire circumference of the codend, provided they do not have a mesh opening of less than 4–1/2 inches (11.43

cm) diamond mesh, inside stretch measure. For the purposes of this requirement, head ropes are not to be considered part of the top of the regulated portion of a trawl net.

* * * * *

7. In § 648.25, paragraph (a) is revised to read as follows:

§ 648.25 Possession restrictions.

(a) *Atlantic mackerel*. During a closure of the directed Atlantic mackerel fishery that occurs prior to June 1, vessels may not fish for, possess, or land more than 20,000 lb (9.08 mt) of Atlantic mackerel per trip at any time, and may only land Atlantic mackerel once on any calendar day, which is defined as the 24 hr period beginning at 0001 hours and ending at 2400 hours. During a closure of the directed fishery for mackerel that occurs on or after June 1, vessels may not fish for, possess, or land more than 50,000 lb (22.7 mt) of Atlantic mackerel per trip at any time, and may only land Atlantic mackerel once on any calendar day.

* * * * *

8. Section 648.26 is added to read as follows:

§ 648.26 Observer requirements for the Loligo fishery.

(a) A vessel issued a *Loligo* and butterfish moratorium permit, as specified at § 648.4(a)(5)(i), must, for the purposes of observer deployment, have a representative provide notice to NMFS of the vessel name, contact name for coordination of observer deployment, telephone number for contact; and the date, time, and port of departure, at least 72 hrs prior to beginning any fishing trip, unless it complies with the possession restrictions in paragraph (c) of this section.

(b) If the vessel representative notifies NMFS of an upcoming trip, and then that trip is cancelled, the representative is required to provide notice to NMFS of the vessel name, contact name for coordination of observer deployment, and telephone number for contact, and the intended date, time, and port of departure for the cancelled trip within 72 hrs of the initial notification.

(c) A vessel issued a *Loligo* and butterfish moratorium permit, as specified at § 648.4(a)(5)(i), that does not have a representative provide the trip notification required in paragraph (a) of this section is prohibited from fishing for, possessing, harvesting, or landing 2,500 lb (1.13 mt) or more of *Loligo* per trip at any time, and may only land *Loligo* once on any calendar day, which is defined as the 24 hr period beginning at 0001 hours and ending at 2400 hours.

(d) If a vessel issued a *Loligo* and butterfish moratorium permit, as specified at § 648.4(a)(5)(i), possesses, harvests, or lands 2,500 lb (1.13 mt) or more of *Loligo* per trip or per calendar day and is selected by NMFS to carry an observer, but the trip selected for observer coverage is cancelled, then that vessel is required to carry an observer, provided an observer is available, on its next trip.

[FR Doc. E9–21322 Filed 9–2–09; 8:45 am]

BILLING CODE 3510–22–S

Notices

Federal Register

Vol. 74, No. 170

Thursday, September 3, 2009

This section of the FEDERAL REGISTER contains documents other than rules or proposed rules that are applicable to the public. Notices of hearings and investigations, committee meetings, agency decisions and rulings, delegations of authority, filing of petitions and applications and agency statements of organization and functions are examples of documents appearing in this section.

DEPARTMENT OF AGRICULTURE

Farm Service Agency

Information Collection; Request for Aerial Photography; Correction

AGENCY: Farm Service Agency, USDA.

ACTION: Notice and request for comments; correction.

SUMMARY: We are making a correction to the notice that requested a revision of a currently approved information collection associated with Request for Aerial Photography. The notice was published in the **Federal Register** on April 1, 2009 (74 FR 14769–14770). The original notice inadvertently only included the burden for one of the two forms in the information collection request. This corrects that oversight.

FOR FURTHER INFORMATION CONTACT: Mary Ann Ball, Regulatory Review Group, (202) 720–4283, or e-mail: *maryann.ball@wdc.usda.gov.*

Correction

In the **Federal Register** notice published on April 1, 2009 (74 FR 14769–14770), on page 14770, first column, under **SUPPLEMENTARY INFORMATION** which begins on page 14769, correct the burden estimated numbers by replacing the estimates to read:

Estimate of Burden: The public reporting burden for this information collection is estimated to average 36 minutes per respondent.

Estimated Number of Respondents: 6300.

Estimated Number of Responses per Respondent: 1.

Estimated Total Annual Number of Respondents: 6300.

Estimated Total Annual Burden on Respondents: 3770.

Signed in Washington, DC, on August 28, 2009.

Carolyn B. Cooksie,

Acting Administrator, Farm Service Agency.

[FR Doc. E9–21294 Filed 9–2–09; 8:45 am]

BILLING CODE 3410–05–P

DEPARTMENT OF AGRICULTURE

Commodity Credit Corporation

Farm Service Agency

Notice of Intent To Prepare a Supplemental Environmental Impact Statement for the Conservation Reserve Program

AGENCY: Commodity Credit Corporation and Farm Service Agency, USDA.

ACTION: Notice of Intent (NOI) and request for comments.

SUMMARY: This notice announces that the Farm Service Agency (FSA), on behalf of the Commodity Credit Corporation (CCC), intends to complete a Supplemental Environmental Impact Statement (SEIS) assessing the environmental impacts of changes to the Conservation Reserve Program (CRP) required by the Food, Conservation, and Energy Act of 2008 (2008 Farm Bill).

DATES: To ensure the full range of the issues and alternatives related to CRP are addressed, FSA invites comments. We will consider comments that we receive by October 19, 2009. Comments received after this date will be considered to the extent possible. See the **SUPPLEMENTARY INFORMATION** section for dates and addresses for nine public meetings.

ADDRESSES: We invite you to submit comments on this Notice of Intent. In your comments, include the volume, date, and page number of this issue of the **Federal Register**. You may submit comments by any of the following methods:

- *E-Mail: CRPcomments@tecinc.com.*
- *Online:* Go to *http://public.geo-marine.com.* Follow the online instructions for submitting comments.
- *Fax:* (757) 594–1469.
- *Mail:* CRP SEIS, c/o TEC Inc., 8 San Jose Drive, Suite 3–B, Newport News, Virginia 23606.
- *Hand Delivery or Courier:* Deliver comments to the above address.
- *Federal eRulemaking Portal:* Go to *http://www.regulations.gov.* Follow the online instructions for submitting comments.

Comments may be inspected in the Office of the Director, CEPD, FSA, USDA, 1400 Independence Ave, SW., Room 4709 South Building, Washington, DC, between 8 a.m. and 4:30 p.m., Monday through Friday, except holidays.

FOR FURTHER INFORMATION CONTACT: Matthew Ponish, National Environmental Compliance Manager, USDA, FSA, CEPD, Stop 0513, 1400 Independence Ave, SW., Washington, DC 20250–0513, (202) 720–6853, or email: *Matthew.Ponish@wdc.usda.gov.* Persons with disabilities who require alternative means for communication (Braille, large print, audio tape, etc.) should contact the USDA Target Center at (202) 720–2600 (voice and TDD). More detailed information on CRP may be obtained at *http://www.fsa.usda.gov/FSA/webapp?area=home&subject=copr&topic=crp.*

SUPPLEMENTARY INFORMATION:

The SEIS is being prepared on CRP to provide FSA decision makers and the public with an analysis that evaluates program effects in appropriate contexts, describes the intensity of adverse as well as beneficial impacts, and addresses cumulative impacts of CRP. CRP is authorized by the Food Security Act of 1985 (the 1985 Farm Bill), as amended and is governed by regulations published in 7 CFR part 1410. CRP is a voluntary program that supports the implementation of long-term conservation measures designed to improve the quality of ground and surface waters, control soil erosion, and enhance wildlife habitat on environmentally sensitive agricultural land. In return, CCC provides participants with rental payments and cost share assistance under contracts extending from 10 to 15 years. CRP is a CCC program administered by FSA with the support of other Federal and local agencies.

In 2003, an Environmental Impact Statement (EIS) was completed by FSA for the CRP evaluating the environmental consequences of implementing the Farm Security and Rural Investment Act of 2002. This SEIS will assess the potential environmental impacts of changes made to the program in provisions of the 2008 Farm Bill (Pub. L. 110–246). The changes that will be assessed in the SEIS are:

• In general, the CRP purposes now explicitly include addressing issues raised by state, regional and national conservation initiatives (see 16 U.S.C. 3831(a)).

• The cropping history requirements are updated to 4 of 6 years from 2002 to 2007 (see 16 U.S.C. 3831(b)).

• The enrollment authority is set at 39.2 million acres through 2009 and reduced to 32.0 million acres for fiscal years 2010, 2011, and 2012 (see 16 U.S.C. 3831(d)).

• Alfalfa and multiyear grasses and legumes in a rotation practice with an agricultural commodity may contribute towards meeting crop history requirements (see 16 U.S.C. 3831(g)).

• The authority is granted to except acreage enrolled under continuous signup and the Conservation Reserve Enhancement Program provided county government concurs (see 16 U.S.C. 3831(b)).

• CCC requires management by the participant throughout the contract term to implement the conservation plan (see 16 U.S.C 3843).

• CCC provides exceptions to general prohibitions (see 16 U.S.C. 3844) on use including:

○ Managed harvesting with appropriate vegetation management during named periods and with a payment reduction,

○ Managed harvesting for biomass with appropriate vegetation management during named periods and with a payment reduction,

○ Grazing for invasive species with appropriate vegetation management during named periods and with a payment reduction, and

○ Installation of wind turbines with appropriate vegetation management during named periods and with a payment reduction.

• Annual survey of dryland and cash rental rates by the National Agricultural Statistics Service (see 16 U.S.C. 3843(c)).

• Incentives for beginning or socially disadvantaged farmers or ranchers to facilitate a transition of land enrolled in CRP from a retired or retiring owner or operator to return some or all of the land to agricultural production using sustainable grazing or crop production methods (see 16 U.S.C. 3835).

• Adds incentives for socially disadvantaged farmers and ranchers as well as limited resource farmers and ranchers and Indian tribes to participate in conservation programs (see 16 U.S.C. 3844).

• Development of habitat for native and managed pollinators and use of conservation practices that benefit them are encouraged for any conservation program (see 16 U.S.C. 3844).

The SEIS will help FSA review potential environmental impacts resulting from the 2008 Farm Bill changes to the CRP program. The results of the SEIS will be used in implementing and modifying CRP administration. The record of decision resulting from the SEIS will also serve as guidance to FSA program decision makers when considering future CRP changes.

Under the National Environmental Policy Act (NEPA), the SEIS process provides a means for the public to provide input on program implementation alternatives and on environmental concerns. The public is urged to participate in helping to define the scope of the proposed SEIS. In addition to allowing the opportunity to comment via mail, the internet, and e-mail as provided in the above **ADDRESSES** section, FSA plans to hold nine public scoping meetings to provide information and opportunities for discussing the issues and alternatives to be covered in the draft SEIS, and to receive oral and written comments. The meetings will be held at the following locations and times:

Date	Time	Location information
September 15, 2009	5:30–7:30 p.m. local time.	Hilton Garden Inn Spokane Airport, 9015 West SR Highway 2, Spokane, WA 99224, (509) 244–5866.
September 17, 2009	5–7 p.m. local time	Hampton Inn Great Falls, 2301 14th St., SW., Great Falls, MT 59404, (406) 453–2675.
September 21, 2009	5–7 p.m. local time	AmericInn Lodge & Suites and Event Center of Moorhead, 600 30th Ave., S., Moorhead, MN 56560, (218) 287–7100.
September 23, 2009	5–7 p.m. local time	Clarion Hotel, 530 Richards Drive, Manhattan, KS 66502, (785) 539–5311.
September 25, 2009	5–7 p.m. local time	Hilton Garden Inn, Springfield, 3100 S. Dirksen Parkway, Springfield, IL 62703, (217) 529–7171 ext. 507.
September 29, 2009	5–7 p.m	Oklahoma City Marriott Hotel, 3233 N.W. Expressway, Oklahoma City, OK 73112, (405) 879–7042.
October 1, 2009	5–7 p.m. local time	La Quinta Inn & Suites Clovis, 4521 N. Prince St., Clovis, NM 88101, (575) 763–8777.
October 6, 2009	5–7 p.m. local time	Hilton Garden Inn Albany, 101 S. Front Street, Albany, GA 31701, (229) 888–1590.
October 8, 2009	5–7 p.m. local time	Courtyard by Marriott Harrisburg/Hershey, 725 Eisenhower Blvd, Harrisburg, PA 17111, (717) 558–8544 ext. 6504.

Please check *http://public.geo-marine.com* for specific meeting locations, times, directions, and comment forms.

Description of Preliminary Alternatives

FSA has developed a set of preliminary alternatives to be studied in the draft SEIS to initiate the process. The alternatives will be amended, as appropriate, based on input by the public and agencies during the public scoping process. The SEIS will address the following alternatives, which include recommended changes to the program:

• No Action Alternative—continuation of CRP as currently implemented.

• Action Alternative 1—full implementation of the applicable 2008 Farm Bill provisions in accordance with current procedures.

• Action Alternative 2—implementation of CRP in accordance with applicable 2008 Farm Bill provisions exercising discretion that differs from current procedures.

Signed in Washington, DC on August 28, 2009.

Jonathan W. Coppess,

Executive Vice President, Commodity Credit Corporation, and Administrator, Farm Service Agency.

[FR Doc. E9–21236 Filed 9–2–09; 8:45 am]

BILLING CODE 3410–05–P

DEPARTMENT OF AGRICULTURE

Farm Service Agency

Advisory Committee on Beginning Farmers and Ranchers

AGENCY: Farm Service Agency, USDA.

ACTION: Notice requesting nominations.

SUMMARY: The Secretary of Agriculture is renewing the charter of the Advisory Committee on Beginning Farmers and Ranchers (Committee). The Committee provides advice to the Secretary on ways to encourage Federal and State beginning farmer programs to provide joint financing to beginning farmers and ranchers, and other methods of creating new farming and ranching opportunities. This notice invites nominations for persons to service on the Committee.

DATES: We will consider nominations that we receive by October 5, 2009.

ADDRESSES: The instructions for submission of nominations are provided in the **SUPPLEMENTARY INFORMATION** section. You may submit nominations to: Mark Falcone, Designated Federal Official (DFO) for the Advisory Committee on Beginning Farmers and Ranchers, or Ken Hill, Farm Service Agency, U.S. Department of Agriculture, 1400 Independence Avenue, SW., STOP 0522, Washington, DC 20250–0522; telephone (202) 720–1632; Fax (202) 690–1117.

FOR FURTHER INFORMATION CONTACT: Mark Falcone at (202) 720–1632; or e-mail: *mark.falcone@usda.gov*, or Ken Hill at (202) 720–5199, or e-mail: *Kenneth.Hill@wdc.usda.gov*.

SUPPLEMENTARY INFORMATION: As required by section 5 of the Agricultural Credit Improvement Act of 1992 (Pub. L. 102–554), the Secretary of Agriculture established the Committee to advise the Secretary on:

(1) Development of a program of coordinated financial assistance to qualified beginning farmers and ranchers under section 309(i) of the Consolidated Farm and Rural Development Act (Federal and State beginning farmer programs provide joint financing to beginning farmers and ranchers);

(2) Methods of maximizing the number of new farming and ranching opportunities created through the program;

(3) Methods of encouraging States to participate in the program;

(4) Administration of the program; and

(5) Other methods of creating new farming or ranching opportunities.

The law requires that members of the Committee be representatives from the following groups:

(1) The Farm Service Agency (FSA);

(2) State beginning farmer programs (as defined in section 309(i)(5) of the Consolidated Farm and Rural Development Act);

(3) Commercial lenders;

(4) Private nonprofit organizations with active beginning farmer or rancher programs;

(5) The USDA Cooperative State Research, Education, and Extension Service (CSREES);

(6) Community colleges or other educational institutions with demonstrated experience in training beginning farmers or ranchers; and

(7) Other entities or persons providing lending or technical assistance to qualified beginning farmers or ranchers.

The Secretary will also appoint farmers and ranchers to the Committee. USDA Departmental Regulation 1042–119, dated November 25, 1998, first established the Committee and designated FSA to provide support. Seven of the Committee members were replaced when the Committee charter was last renewed on March 28, 2008. Approximately one-third of the 20 existing members will be replaced when the charter is renewed.

We are now accepting nominations of individuals to serve for a 2-year term on the Committee. Reappointments are made to assure effectiveness and continuity of operations. The duration of the Committee is indefinite. No member, other than a USDA employee, can serve for more than 6 consecutive years. There will be a vacancy in at least four groups: State beginning farmer programs, commercial lenders, CSREES, and farmers and ranchers. Appointments and reappointments to the Committee will be made by the end of the calendar year and all nominees will be notified in writing.

The Committee generally meets at least once a year and all meetings are open to the public. Committee meetings provide an opportunity for members to exchange ideas and provide advice on ways to increase opportunities for beginning farmers and ranchers. Members discuss various issues and draft recommendations, which are submitted to the Secretary in writing.

Nominations are being sought through the media, this **Federal Register** notice, and other appropriate methods. Persons nominated for the Committee will be required to complete and submit an Advisory Committee Membership Background Information Questionnaire (Form AD–755). Submission of this form will constitute a nomination. The form is available on the Internet at *http://www.fsa.usda.gov/Internet/FSA_File/ad755.pdf*. AD–755 can be completed on-line. However, nominees must print their completed forms from the Adobe PDF file, sign, and mail or fax them to the above address or fax number. The form also may be requested by telephone, fax, or e-mail. Letters of recommendation may be submitted, but should not be solicited or obtained from USDA officials employed in Washington DC. All inquiries about the nomination process and submissions of the AD–755 should go to Mark Falcone or Ken Hill, as provided in the **ADDRESSES** section for addresses and numbers.

Appointments to the Committee will be made by the Secretary of Agriculture. Equal opportunity practices, consistent with USDA policies, will be followed in making all appointments to the Committee. To ensure that the recommendations of the Committee have taken into account the needs of the diverse groups served by the Department, membership should include, to the extent practicable, individuals with demonstrated ability to represent minorities, women, persons with disabilities, and senior citizens.

Signed in Washington, DC on August 28, 2009.

Jonathan W. Coppess,

Administrator, Farm Service Agency.

[FR Doc. E9–21293 Filed 9–2–09; 8:45 am]

BILLING CODE 3410–05–P

DEPARTMENT OF AGRICULTURE

Rural Utilities Service

Publication of Depreciation Rates

AGENCY: Rural Utilities Service, USDA.

ACTION: Notice.

SUMMARY: The Rural Utilities Service (RUS), an agency of the United States Department of Agriculture (USDA), announces the depreciation rates for telecommunications plant for the period ending December 31, 2008.

DATES: These rates are effective immediately and will remain in effect until rates are available for the period ending December 31, 2009.

FOR FURTHER INFORMATION CONTACT: Jonathan P. Claffey, Deputy Assistant Administrator, Telecommunications Program, Rural Utilities Service, STOP 1590—Room 5151, 1400 Independence Avenue, SW., Washington, DC 20250–1590. Telephone: (202) 720–9556.

SUPPLEMENTARY INFORMATION: In the Rural Utilities Service regulation, 7 CFR part 1737, Pre-Loan Policies and Procedures Common to Insured and Guaranteed Telecommunications Loans, § 1737.70(e) explains the depreciation rates that are used by RUS in its feasibility studies. Section 1737.70(e)(2) refers to median depreciation rates published by RUS for all borrowers. The following chart provides those rates,

compiled by RUS for the reporting period ending December 31, 2008:

MEDIAN DEPRECIATION RATES FOR RURAL UTILITIES SERVICE BORROWERS BY EQUIPMENT CATEGORY FOR PERIOD ENDING DECEMBER 31, 2008

Telecommunications plant category	Depreciation rate
1. Land and Support Assets:	
a. Motor vehicles	16.00
b. Aircraft	11.25
c. Special purpose vehicles	12.00
d. Garage and other work equipment	10.00
e. Buildings	3.28
f. Furniture and office equipment	10.00
g. General purpose computers	20.00
2. Central Office Switching:	
a. Digital	8.83
b. Analog & Electro-mechanical	9.66
c. Operator Systems	9.00
3. Central Office Transmission:	
a. Radio Systems	9.42
b. Circuit equipment	10.00
4. Information origination/termination:	
a. Station apparatus	11.90
b. Customer premises wiring	10.00
c. Large private branch exchanges	11.65
d. Public telephone terminal equipment	11.00
e. Other terminal equipment	10.20
5. Cable and wire facilities:	
a. Aerial cable—poles	6.25
b. Aerial cable—metal	5.90
c. Aerial cable—fiber	5.10
d. Underground cable—metal	5.00
e. Underground cable—fiber	5.00
f. Buried cable—metal	5.00
g. Buried cable—fiber	5.00
h. Conduit systems	3.50
i. Other	6.00

Dated: August 7, 2009.

Jonathan Adelstein,

Administrator, Rural Utilities Service.

[FR Doc. E9–21235 Filed 9–2–09; 8:45 am]

BILLING CODE 3410–15–P

COMMISSION ON CIVIL RIGHTS

Sunshine Act Notice

AGENCY: United States Commission on Civil Rights.

ACTION: Notice of meeting.

DATE AND TIME: Friday, September 11, 2009; 9:30 a.m. EDT.

PLACE: 624 9th St., NW., Room 540, Washington, DC 20425.

Meeting Agenda

This meeting is open to the public.

I. Approval of Agenda

II. Approval of Minutes of August 7, 2009 Meeting

III. Announcements

IV. Staff Director's Report

V. Program Planning

- Discussion of 2010 Statutory Report Topic Ideas
- Discussion of Potential FY 2010 Clearinghouse Reports and Briefings
- Briefing Report on Title IX in Intercollegiate Athletics: Accommodating Interests and Abilities
- Update on Status of Document Request to Government Agencies Regarding their Civil Rights Enforcement Activities
- Update on Status of Briefing Reports

VI. State Advisory Committee Issues

- Iowa SAC
- Nevada SAC

VII. Adjourn

CONTACT PERSON FOR FURTHER INFORMATION: Lenore Ostrowsky, Acting Chief, Public Affairs Unit (202) 376–8591. TDD: (202) 376–8116.

Persons with a disability requiring special services, such as an interpreter for the hearing impaired, should contact Pamela Dunston at least seven days prior to the meeting at 202–376–8105. TDD: (202) 376–8116.

Dated: September 1, 2009.

David Blackwood,

General Counsel.

[FR Doc. E9–21446 Filed 9–1–09; 4:15 pm]

BILLING CODE 6335–01–P

DEPARTMENT OF COMMERCE

Submission for OMB Review; Comment Request

The Department of Commerce will submit to the Office of Management and Budget (OMB) for clearance the following proposal for collection of information under the provisions of the Paperwork Reduction Act (44 U.S.C. Chapter 35).

Agency: International Trade Administration.

Title: Advocacy Questionnaire.

OMB Control Number: 0625–0220.

Form Number(s): ITA–4133P.

Type of Request: Regular submission.

Burden Hours: 200.

Number of Respondents: 400.

Average Hours Per Response: 30 minutes.

Needs and Uses: The International Trade Administration's (ITA) Advocacy Center marshals Federal resources to assist U.S. firms competing for foreign government procurements worldwide. The Advocacy Center works closely with the Trade Promotion Coordination Committee, which is chaired by the Secretary of Commerce, and includes 19 Federal agencies involved in export promotion.

Advocacy assistance is wide and varied, but most often it is used to assist U.S. companies that must deal with foreign governments or government-owned entities to win or maintain business transactions in foreign markets. The Advocacy Center's goal is to ensure opportunities for American companies in the international marketplace.

The purpose of the Advocacy Questionnaire is to collect the information necessary to evaluate whether it would be appropriate to provide USG advocacy assistance on a given transaction. The Advocacy Center, appropriate ITA officials, officers/Ambassadors at U.S. Embassies/Consulates worldwide and other federal agencies that provide advocacy support to U.S. companies, request companies seeking USG advocacy support to complete the questionnaire. The information derived from a completed questionnaire is critical in helping the Advocacy Center determine whether it is in the U.S. national interest to advocate on a specific transaction.

Affected Public: Business or other for-profit organizations.

Frequency: On occasion.

Respondent's Obligation: Voluntary.

OMB Desk Officer: Wendy L. Liberante, Phone (202) 395–3647.

Copies of the above information collection proposal can be obtained by calling or writing Diana Hynek, Departmental Paperwork Clearance Officer, (202) 482–0266, Department of Commerce, Room 6625, 14th and Constitution Avenue, NW., Washington, DC 20230 (or via the Internet at *dHynek@doc.gov).*

Written comments and recommendations for the proposed information collection should be sent within 30 days of publication of this notice to Wendy Liberante, OMB Desk Officer, FAX number (202) 395–5167 or via the Internet at *Wendy_L._Liberante@omb.eop.gov*

Dated: August 31, 2009.

Gwellnar Banks,

Management Analyst, Office of the Chief Information Officer.

[FR Doc. E9–21273 Filed 9–2–09; 8:45 am]

BILLING CODE 3510–FP–P

DEPARTMENT OF COMMERCE

Submission for OMB Review; Comment Request

The Department of Commerce will submit to the Office of Management and Budget (OMB) for clearance the following proposal for collection of information under the provisions of the Paperwork Reduction Act (44 U.S.C. Chapter 35).

Agency: National Oceanic and Atmospheric Administration (NOAA).

Title: Basic Requirements for Special Exception Permits and Authorizations to Take, Import and Export Marine Mammals, and Endangered and Threatened Species, and for Maintaining a Captive Marine Mammal Inventory Under the Marine Mammal Protection Act, the Fur Seal Act, and the Endangered Species Act.

OMB Control Number: 0648–0084.

Form Number(s): NOAA 89–880.

Type of Request: Regular submission.

Number of Respondents: 514.

Average Hours Per Response: Scientific research and/or enhancement (SR/EN) permit application, 50 hours; public display (PD) permit application, 30 hours; photography (PH) and general authorization for research permit applications, 10 hours; major amendments to existing permits and authorizations, 35 hours; minor amendments and general authorization changes, 3 hours; SR/EN reports, 12 hours; PD and PH reports and PD inventories, 2 hours; general authorization reports, 8 hours; recordkeeping associated with each report, 2 hours; notification of retention or transfer of rehabilitated animals, 2 hours.

Burden Hours: 7,716.

Needs and Uses: The information in this collection will be used to determine whether a proposed activity is consistent with the requirements of the Marine Mammal Protection Act, Fur Seal Act, and Endangered Species Act for issuance of permits and authorizations for research, enhancement, photography, and public display. Reports on activities are also required. The respondents will be researchers, photographers, other members of the general public, and holders of marine mammals in public display facilities.

Affected Public: Individuals or households; not-for-profit institutions; business or other for-profit organizations.

Frequency: Annually.

Respondent's Obligation: Mandatory.

OMB Desk Officer: David Rostker, (202) 395–3897.

Copies of the above information collection proposal can be obtained by calling or writing Diana Hynek, Departmental Paperwork Clearance Officer, (202) 482–0266, Department of Commerce, Room 7845, 14th and Constitution Avenue, NW., Washington, DC 20230 (or via the Internet at *dHynek@doc.gov*).

Written comments and recommendations for the proposed information collection should be sent within 30 days of publication of this notice to David Rostker, OMB Desk Officer, FAX number (202) 395–7285, or *David_Rostker@omb.eop.gov.*

Dated: August 31, 2009.

Gwellnar Banks,

Management Analyst, Office of the Chief Information Officer.

[FR Doc. E9–21275 Filed 9–2–09; 8:45 am]

BILLING CODE 3510–22–P

DEPARTMENT OF COMMERCE

International Trade Administration

[A–533–838]

Carbazole Violet Pigment 23 From India: Extension of Time Limit for Preliminary Results of Antidumping Duty Administrative Review

AGENCY: Import Administration, International Trade Administration, Department of Commerce.

FOR FURTHER INFORMATION CONTACT: Jerrold Freeman or Richard Rimlinger, AD/CVD Operations, Office 5, Import Administration, International Trade Administration, U.S. Department of Commerce, 14th Street and Constitution Avenue, NW., Washington, DC, 20230; telephone: (202) 482–0180 or (202) 482–4477, respectively.

SUPPLEMENTARY INFORMATION:

Background

At the request of interested parties, the Department of Commerce (the Department) initiated an administrative review of the antidumping duty order on carbazole violet pigment 23 from India for the period December 1, 2007, through November 30, 2008. *See Initiation of Antidumping and Countervailing Duty Administrative Reviews and Requests for Revocation in Part,* 74 FR 5821 (February 2, 2009).

Extension of Time Limit for Preliminary Results

Section 751(a)(3)(A) of the Tariff Act of 1930, as amended (the Act), requires the Department to make a preliminary determination within 245 days after the last day of the anniversary month of an

order for which a review is requested and a final determination within 120 days after the date on which the preliminary determination is published. If it is not practicable to complete the review within these time periods, section 751(a)(3)(A) of the Act allows the Department to extend the time limit for the preliminary determination to a maximum of 365 days after the last day of the anniversary month. *See also* 19 CFR 351.213(h)(2).

We determine that it is not practicable to complete the preliminary results of this administrative review by the current deadline of September 2, 2009, for several reasons. Specifically, the Department has granted the respondent several extensions to respond to the original and supplemental questionnaires. Accordingly, the Department needs additional time to review and analyze the responses submitted by the respondent. Further, the Department requires additional time to conduct verification. Therefore, in accordance with section 751(a)(3)(A) of the Act and 19 CFR 351.213(h)(2), we are extending the time period for issuing the preliminary results of these reviews for 75 days until November 16, 2009. The final results continue to be due 120 days after the publication of the preliminary results.

This notice is published in accordance with sections 751(a)(3)(A) and 777(i)(1) of the Act and 19 CFR 351.213(h)(2).

Dated: August 27, 2009.

John M. Andersen,

Acting Deputy Assistant Secretary for Antidumping and Countervailing Duty Operations.

[FR Doc. E9–21320 Filed 9–2–09; 8:45 am]

BILLING CODE 3510–DS–P

DEPARTMENT OF COMMERCE

International Trade Administration

[A–489–807]

Certain Steel Concrete Reinforcing Bars From Turkey; Final Results and Final Partial Rescission of Antidumping Duty Administrative Review

AGENCY: Import Administration, International Trade Administration, Department of Commerce.

SUMMARY: On May 6, 2009, the Department of Commerce (the Department) published the preliminary results of the administrative review of the antidumping duty order on certain steel concrete reinforcing bars (rebar) from Turkey. This review covers two producers/exporters of the subject merchandise to the United States. The period of review (POR) is April 1, 2007, through March 25, 2008.

Based on our analysis of the comments received, we have made certain changes in the margin calculations. The final results, consequently, differ from the preliminary results. The final weighted–average dumping margins for the reviewed firms are listed below in the section entitled ''Final Results of Review.''

EFFECTIVE DATE: September 3, 2009.

FOR FURTHER INFORMATION CONTACT: Hector Rodriguez or Holly Phelps, AD/CVD Operations, Office 2, Import Administration – Room 1870, International Trade Administration, U.S. Department of Commerce, 14th Street and Constitution Avenue, NW, Washington, DC 20230; telephone: (202) 482–0629 or (202) 482–0656, respectively.

SUPPLEMENTARY INFORMATION:

Background

The administrative review covers the following two producers/exporters: Ekinciler Demir ve Celik Sanayi A.S. and Ekinciler Dis Ticaret A.S. (collectively, ''Ekinciler''), and Kaptan Demir Celik Endustrisi ve Ticaret A.S. (Kaptan).

On May 6, 2009, the Department published in the **Federal Register** the preliminary results of the 2007–2008 administrative review of the antidumping duty order on rebar from Turkey. *See Certain Steel Concrete Reinforcing Bars from Turkey; Preliminary Results and Preliminary Partial Rescission of Antidumping Duty Administrative Review*, 74 FR 20911 (May 6, 2009) (Preliminary Results).

We invited parties to comment on our preliminary results. In June 2009, we received a case brief from Kaptan. We did not receive rebuttal briefs from any party. The Department has conducted this administrative review in accordance with section 751 of the Tariff Act of 1930, as amended (the Act).

Scope of the Order

The product covered by this order is all stock deformed steel concrete reinforcing bars sold in straight lengths and coils. This includes all hot–rolled deformed rebar rolled from billet steel, rail steel, axle steel, or low–alloy steel. It excludes (i) plain round rebar, (ii) rebar that a processor has further worked or fabricated, and (iii) all coated rebar. Deformed rebar is currently classifiable under subheadings 7213.10.000 and 7214.20.000 of the *Harmonized Tariff Schedule of the United States* (HTSUS). The HTSUS subheadings are provided for convenience and customs purposes. The written description of the scope of this order is dispositive.

Period of Review

The POR is April 1, 2007, through March 25, 2008.

Partial Rescission of Review

In April 2008, the Department received timely requests, in accordance with 19 CFR 351.213(b)(1), from the domestic interested parties to conduct a review for Ege Celik Endustrisi Sanayi ve Ticaret A.S. (Ege Celik), Izmir Demir Celik Sanayi A.S. (IDC), Kroman Celik Sanayi A.S. (Kroman), and Nursan Celik Sanayi ve Haddecilik A.S. (Nursan), and in June 2008 the Department initiated an administrative review of these four companies. During this same month, each of these respondents informed the Department that it did not export rebar to the United States during the POR. We have confirmed this with U.S. Customs and Border Protection (CBP). *See* the April 30, 2009, memorandum to the file from Hector Rodriguez, Analyst, entitled, ''Confirmation of No Shipments for Certain Companies in the 2007–2008 Antidumping Duty Administrative Review on Certain Steel Concrete Reinforcing Bars from Turkey.'' Therefore, in accordance with 19 CFR 351.213(d)(3), and consistent with the Department's practice, we are rescinding our review with respect to Ege Celik, IDC, Kroman, and Nursan. *See, e.g., Certain Frozen Warmwater Shrimp from Thailand: Final Results and Final Partial Rescission of Antidumping Duty Administrative Review,* 72 FR 52065, 52067 (Sept. 12, 2007); and *Certain Steel Concrete Reinforcing Bars From Turkey; Final Results, Rescission of Antidumping Duty Administrative Review in Part, and Determination To Revoke in Part*, 70 FR 67665, 67666 (Nov. 8, 2005).

Cost of Production

As discussed in the *Preliminary Results*, we conducted an investigation to determine whether Ekinciler and Kaptan made home market sales of the foreign like product during the POR at prices below their costs of production (COP) within the meaning of section 773(b)(1) of the Act. We performed the cost test for these final results following the same methodology as in the *Preliminary Results*. We found 20 percent or more of Ekinciler's and Kaptan's sales of a given product during the reporting period were at prices less than the weighted average COP for this period. Thus, we determined that these

below–cost sales were made in ''substantial quantities'' within an extended period of time and at prices which did not permit the recovery of all costs within a reasonable period of time in the normal course of trade. *See* sections 773(b)(2)(B) – (D) of the Act.

Therefore, for purposes of these final results, we found that Ekinciler and Kaptan made below–cost sales not in the ordinary course of trade. Consequently, we disregarded these sales for Ekinciler and Kaptan and used the remaining sales as the basis for determining NV pursuant to section 773(b)(1) of the Act.

Analysis of Comments Received

The issues raised in Kaptan's case brief are listed in the Appendix to this notice and addressed in the Decision Memo, which is adopted by this notice. Parties can find a complete discussion of all issues raised in this review and the corresponding recommendations in this public memorandum, which is on file in the Central Records Unit, room 1117, of the main Department building.

In addition, a complete version of the Decision Memo can be accessed directly on the Web at http://ia.ita.doc.gov/frn/. The paper copy and electronic version of the Decision Memo are identical in content.

Changes Since the Preliminary Results

Based on our analysis of the comments received, we have made certain changes in the margin calculation for Kaptan. These changes are discussed in detail in the relevant sections of the Decision Memo.

Final Results of Review

We determine that the following weighted–average margin percentages exist for the period April 1, 2007, through March 25, 2008:

Manufacturer/Producer/Exporter	Margin Percentage
Ekinciler Demir ve Celik Sanayi A.S./Ekinciler Dis Ticaret A.S.	0.35
Kaptan Demir Celik Endustrisi ve Ticaret A.S.	0.00

Assessment

The Department shall determine, and CBP shall assess, antidumping duties on all appropriate entries, in accordance with 19 CFR 351.212. Pursuant to 19 CFR 351.212(b)(1), we calculated importer–specific assessment rates for each respondent based on the ratio of the total amount of antidumping duties calculated for the examined sales to the total entered value of those sales.

Pursuant to 19 CFR 351.106(c)(2), we will instruct CBP to liquidate without regard to antidumping duties any entries for which the assessment rate is *de minimis (i.e.*, less than 0.50 percent). The Department intends to issue assessment instructions to CBP 15 days after the date of publication of these final results of review.

The Department clarified its ''automatic assessment'' regulation on May 6, 2003. *See Antidumping and Countervailing Duty Proceedings: Assessment of Antidumping Duties*, 68 FR 23954 (May 6, 2003). This clarification will apply to entries of subject merchandise during the POR produced by companies included in these final results of review for which the reviewed companies did not know their merchandise was destined for the United States. In such instances, we will instruct CBP to liquidate unreviewed entries at the all–others rate if there is no rate for the intermediate company(ies) involved in the transaction.

Cash Deposit Requirements

In December 2008, the International Trade Commission (ITC) determined, pursuant to section 751(c) of the Act, that revocation of this order would not be likely to lead to the continuation or recurrence of material injury to an industry in the United States within a reasonably foreseeable time. *See Steel Concrete Reinforcing Bar From Turkey; Determination*, 73 FR 77841 (Dec. 19, 2008). *See also Steel Concrete Reinforcing Bars from Turkey*, Inv. No. 701–TA–745 (Second Review), USITC Pub. 4 (Jan. 2009). As a result of the ITC's negative determination, the Department revoked the order on rebar from Turkey on January 5, 2009, effective as of March 26, 2008 (i.e., the fifth anniversary of the date of publication in the **Federal Register** of the notice of continuation of this antidumping duty order). *See Revocation of Antidumping Duty Order: Certain Steel Concrete Reinforcing Bars from Turkey*, 74 FR 266 (Jan. 5, 2009). Consequently, the collection of cash deposits of antidumping duties on entries of the subject merchandise is no longer required.

Notification to Importers

This notice serves as a final reminder to importers of their responsibility, under 19 CFR 351.402(f)(2), to file a certificate regarding the reimbursement of antidumping duties prior to liquidation of the relevant entries during this review period. Failure to comply with this requirement could result in the Secretary's presumption that reimbursement of antidumping duties occurred and the subsequent assessment of double antidumping duties.

Notification to Interested Parties

This notice serves as the only reminder to parties subject to administrative protective order (APO) of their responsibility concerning the disposition of proprietary information disclosed under APO in accordance with 19 CFR 351.305(a)(3). Timely written notification of return/destruction of APO materials or conversion to judicial protective order is hereby requested. Failure to comply with the regulations and the terms of an APO is a sanctionable violation.

We are issuing and publishing these results of review in accordance with sections 751(a)(1) and 777(i)(1) of the Act and 19 CFR 351.221(b)(5).

Dated: August 27, 2009.

Ronald K. Lorentzen,

Acting Assistant Secretary for Import Administration.

Appendix – Issues in Decision Memorandum

Company–Specific Issues

1. Duty Drawback Adjustment for Kaptan
2. Cost of Raw Materials Adjustment for Kaptan
3. Date of Sale for Kaptan
4. Affiliated Party Freight Revenue for Kaptan

[FR Doc. E9–21321 Filed 9–2–09; 8:45 am]

BILLING CODE 3510–DS–S

DEPARTMENT OF COMMERCE

Foreign-Trade Zones Board

[Docket 36–2009]

Foreign-Trade Zone 170—Clark County, IN; Application for Subzone; Schwarz Pharma Manufacturing Ltd. (Pharmaceuticals Manufacturing), Seymour, IN

An application has been submitted to the Foreign-Trade Zones Board (the Board) by the Ports of Indiana, grantee of FTZ 170, requesting special-purpose subzone status for pharmaceutical manufacturing facility of Schwarz Pharma Manufacturing Ltd. (Shwarz Pharma), located in Seymour, Indiana. The application was submitted pursuant to the provisions of the Foreign-Trade Zones Act, as amended (19 U.S.C. 81a–81u), and the regulations of the Board (15 CFR part 400). It was formally filed on August 25, 2009.

The Schwarz Pharma facility (450 employees, 28.8 acres, 1. 8 billion

doses) is located at 1101 C Avenue West, Seymour, Indiana. The facility is used to manufacture, test, package and warehouse pharmaceutical products. Components and materials sourced from abroad (representing 75% of the value of the finished product) include: alprostidil, edex applicators, lacosamide, moexipril, kremozin, vanlafaxim, and esomeprazole magnesium (duty rate ranges from duty free to 5.3%). The application also requests authority to include a broad range of inputs and finished pharmaceutical products that Schwarz Pharma may produce under FTZ procedures in the future. New major activity involving these inputs/products would require review by the FTZ Board.

FTZ procedures could exempt Schwarz Pharma from customs duty payments on the foreign components used in export production. The company anticipates that less than 5 percent of the plant's shipments will be exported. On its domestic sales, Schwarz Pharma would be able to choose the duty rates during customs entry procedures that apply to Edex kits, Vimpat, Moexipril, Kremozin, Vanlafaxim and an acid reflux pharmaceutical (all duty free) for the foreign inputs noted above. FTZ designation would further allow Schwarz Pharma to realize logistical benefits through the use of weekly customs entry procedures. Customs duties also could possibly be deferred or reduced on foreign status production equipment. The request indicates that the savings from FTZ procedures would help improve the plant's international competitiveness.

In accordance with the Board's regulations, Diane Finver of the FTZ Staff is designated examiner to evaluate and analyze the facts and information presented in the application and case record and to report findings and recommendations to the Board.

Public comment is invited from interested parties. Submissions (original and 3 copies) shall be addressed to the Board's Executive Secretary at the address below. The closing period for their receipt is November 2, 2009. Rebuttal comments in response to material submitted during the foregoing period may be submitted during the subsequent 15-day period to November 17, 2009.

A copy of the application will be available for public inspection at the Office of the Executive Secretary, Foreign-Trade Zones Board, Room 2111, U.S. Department of Commerce, 1401 Constitution Avenue, NW., Washington, DC 20230–0002, and in the ''Reading Room'' section of the Board's Web site, which is accessible via *http://www.trade.gov/ftz.*

For further information, contact Diane Finver at *diane_finver@ita.doc.gov* or (202) 482–1367.

Dated: August 26, 2009.

Andrew McGilvray,

Executive Secretary.

[FR Doc. E9–21319 Filed 9–2–09; 8:45 am]

BILLING CODE 3510–DS–P

DEPARTMENT OF COMMERCE

National Oceanic and Atmospheric Administration

RIN 0648–XN24

Taking and Importing Marine Mammals; Operations of a Liquified Natural Gas Port Facility in Massachusetts Bay

AGENCY: National Marine Fisheries Service (NMFS), National Oceanic and Atmospheric Administration (NOAA), Commerce.

ACTION: Notice of issuance of an incidental harassment authorization.

SUMMARY: In accordance with regulations implementing the Marine Mammal Protection Act (MMPA) as amended, notification is hereby given that an Incidental Harassment Authorization (IHA) to take marine mammals, by harassment, incidental to operation of an offshore liquefied natural gas (LNG) facility in the Massachusetts Bay, has been issued to Northeast Gateway Energy Bridge™ LLC (Northeast Gateway or NEG) for a period of 1 year.

DATES: This authorization is effective from August 31, 2009, until August 30, 2010. NMFS has also made the required findings to support future modification of the IHA to include take of marine mammals by Northeast Gateway's partner, Algonquin Gas Transmission, LLC, incidental to operations and maintenance of the Algonquin Pipeline Lateral upon completion of consultation under section 7 of the Endangered Species Act.

ADDRESSES: A copy of the application, IHA, and a list of references used in this document may be obtained by writing to P. Michael Payne, Chief, Permits, Conservation and Education Division, Office of Protected Resources, National Marine Fisheries Service, 1315 East-West Highway, Silver Spring, MD 20910–3225. A copy of the application may be obtained by writing to this address or by telephoning the contact listed here and is also available at: *http://www.nmfs.noaa.gov/pr/permits/incidental.htm#applications.*

FOR FURTHER INFORMATION CONTACT: Shane Guan, Office of Protected Resources, NMFS, (301) 713–2289, ext 137.

SUPPLEMENTARY INFORMATION:

Background

Sections 101(a)(5)(A) and 101(a)(5)(D) of the MMPA (16 U.S.C. 1361 *et seq.*) direct the Secretary of Commerce (Secretary) to allow, upon request, the incidental, but not intentional taking of marine mammals by U.S. citizens who engage in a specified activity (other than commercial fishing) within a specified geographical region if certain findings are made and regulations are issued or, if the taking is limited to harassment, a notice of a proposed authorization is provided to the public for review.

Authorization shall be granted if NMFS finds that the taking will have a negligible impact on the species or stock(s), will not have an unmitigable adverse impact on the availability of the species or stock(s) for subsistence uses, and if the permissible methods of taking and requirements pertaining to the mitigation, monitoring and reporting of such taking are set forth. NMFS has defined ''negligible impact'' in 50 CFR 216.103 as:

> an impact resulting from the specified activity that cannot be reasonably expected to, and is not reasonably likely to, adversely affect the species or stock through effects on annual rates of recruitment or survival.

Section 101(a)(5)(D) of the MMPA established an expedited process by which citizens of the United States can apply for an authorization to incidentally take small numbers of marine mammals by harassment. Except with respect to certain activities not pertinent here, the MMPA defines ''harassment'' as:

> any act of pursuit, torment, or annoyance which (i) has the potential to injure a marine mammal or marine mammal stock in the wild [Level A harassment]; or (ii) has the potential to disturb a marine mammal or marine mammal stock in the wild by causing disruption of behavioral patterns, including, but not limited to, migration, breathing, nursing, breeding, feeding, or sheltering [Level B harassment].

Section 101(a)(5)(D) establishes a 45-day time limit for NMFS review of an application followed by a 30-day public notice and comment period on any proposed authorizations for the incidental harassment of marine mammals. Within 45 days of the close of the comment period, NMFS must either issue or deny issuance of the authorization.

Summary of Request

On August 15, 2008, NMFS received an application from Tetra Tech EC, Inc., on behalf of Northeast Gateway and Algonquin Gas Transmission, LLC (Algonquin) for an authorization to take 12 species of marine mammals by Level B harassment incidental to operation and maintenance of an LNG port facility in Massachusetts Bay. Since LNG Port operation and maintenance activities have the potential to take marine mammals, a marine mammal take authorization under the MMPA is warranted. NMFS has previously issued one-year incidental harassment authorizations for the LNG Port pursuant to section 101(a)(5)(D) of the MMPA, the most recent of which expired on May 14, 2009 (see 73 FR 29485, May 21, 2008). On January 26, 2009, Northeast Gateway and Algonquin submitted a revised MMPA permit application that added certain Algonquin Pipeline Lateral operation and maintenance (O&M) activities for a limited time. NMFS' notice of proposed IHA included analysis of these additional activities (see 74 FR 9801, March 6, 2009), and reinitiation of consultation under section 7 of the Endangered Species Act (ESA) began to analyze the effects of the O&M activities on ESA-listed species, which had not been analyzed in the existing biological opinion.

As of August 14, 2009, ESA consultation was not complete; therefore, NMFS could not issue an IHA for the Deepwater Port operations/maintenance and Pipeline Lateral O&M activities. On August 14, 2009, Northeast Gateway requested NMFS to issue an IHA just covering the operational portion of the Deepwater Port (for which there is a biological opinion). Northeast Gateway further requested that a modified IHA be issued to both Northeast Gateway and Algonquin adding operations and maintenance (including repair) of the Pipeline Lateral once the section 7 consultation is concluded and a non-jeopardy determination for listed species is made. Because the LNG Port facility and Algonquin Pipeline Lateral operation and maintenance activities will be ongoing in the foreseeable future, NMFS will propose regulations pursuant to section 101(a)(5)(A) of the MMPA, which would govern these incidental takes under a Letter of Authorization for up to five years. Under section 101(a)(5)(A), NMFS also must prescribe mitigation, monitoring, and reporting requirements in its regulations.

Description of the Activity

The Northeast Gateway Port is located in Massachusetts Bay and consists of a submerged buoy system to dock specially designed LNG carriers approximately 13 mi (21 km) offshore of Massachusetts in federal waters approximately 270 to 290 ft (82 to 88 m) in depth. This facility delivers regasified LNG to onshore markets via a 16.06-mi (25.8-km) long, 24-in (61-cm) outside diameter natural gas pipeline lateral (Pipeline Lateral) owned and operated by Algonquin and interconnected to Algonquin's existing offshore natural gas pipeline system in Massachusetts Bay (HubLine).

The Northeast Gateway Port consists of two subsea Submerged Turret Loading™ (STL) buoys, each with a flexible riser assembly and a manifold connecting the riser assembly, via a steel flowline, to the subsea Pipeline Lateral. Northeast Gateway utilizes vessels from its current fleet of specially designed Liquefied Natural Gas Regasification Vessels (LNGRVs), each capable of transporting approximately 2.9 billion ft^3 (82 million m^3) of natural gas condensed to 4.9 million ft^3 (138,000 m^3) of LNG. Northeast Gateway would also be adding vessels to its fleet that will have a cargo capacity of approximately 151,000 cubic m^3. The mooring system installed at the Northeast Gateway Port is designed to handle both the existing vessels and any of the larger capacity vessels that may come into service in the future. The LNGRVs would dock to the STL buoys, which would serve as both the single-point mooring system for the vessels and the delivery conduit for natural gas. Each of the STL buoys is secured to the seafloor using a series of suction anchors and a combination of chain/cable anchor lines.

The proposed activity includes Northeast Gateway LNG Port operation and maintenance.

NEG Port Operations

During NEG Port operations, LNGRVs servicing the Northeast Gateway Port will utilize the newly configured and International Maritime Organization-approved Boston Traffic Separation Scheme (TSS) on their approach to and departure from the Northeast Gateway Port at the earliest practicable point of transit. LNGRVs will maintain speeds of 12 knots or less while in the TSS, unless transiting the Off Race Point Seasonal Management Area between the dates of March 1 and April 30, or the Great South Channel Seasonal Management Area between the dates of April 1 and July 31, when they will not exceed 10-knots or when there have been active right whale sightings, active acoustic detections, or both, in the vicinity of the transiting LNGRV in the TSS or at the Northeast Gateway Port, in which case the vessels also will slow their speeds to 10 knots or less.

As an LNGRV makes its final approach to the Northeast Gateway Port, vessel speed will gradually be reduced to 3 knots at 1.86 mi (3 km) out to less than 1 knot at a distance of 1,640 ft (500 m) from the Northeast Gateway Port. When an LNGRV arrives at the Northeast Gateway Port, it would retrieve one of the two permanently anchored submerged STL buoys. It would make final connection to the buoy through a series of engine and bow thruster actions. The LNGRV would require the use of thrusters for dynamic positioning during docking procedure. Typically, the docking procedure is completed over a 10- to 30-minute period, with the thrusters activated as necessary for short periods of time in second bursts, not a continuous sound source. Once connected to the buoy, the LNGRV will begin vaporizing the LNG into its natural gas state using the onboard regasification system. As the LNG is regasified, natural gas will be transferred at pipeline pressures off the LNGRV through the STL buoy and flexible riser via a steel flowline leading to the connecting Pipeline Lateral. When the LNG vessel is on the buoy, wind and current effects on the vessel would be allowed to ''weathervane'' on the single-point mooring system; therefore, thrusters will not be used to maintain a stationary position.

It is estimated that the NEG Port could receive approximately 65 cargo deliveries a year. During this time period thrusters would be engaged in use for docking at the NEG Port approximately 10 to 30 minutes for each vessel arrival and departure.

NEG Port Maintenance

The specified design life of the NEG Port is about 40 years, with the exception of the anchors, mooring chain/rope, and riser/umbilical assemblies, which are based on a maintenance-free design life of 20 years. The buoy pick-up system components are considered consumable and would be inspected following each buoy connection, and replaced (from inside the STL compartment during the normal cargo discharge period) as deemed necessary. The underwater components of the NEG Port would be inspected once yearly in accordance with Classification Society Rules (American Bureau of Shipping) using either divers or remotely operated vehicles (ROVs) to

inspect and record the condition of the various STL system components. These activities would be conducted using the NEG Port's normal support vessel (125-foot, 99 gross ton, 2,700 horsepower, aluminum mono-hull vessel), and to the extent possible would coincide with planned weekly visits to the NEG Port. Helicopters would not be used for marker line maintenance inspections.

Detailed information on the LNG facility's operation and maintenance activities, and noise generated from operations was also published in the **Federal Register** for the proposed IHA for Northeast Gateway's LNG Port construction and operations on March 13, 2007 (72 FR 11328).

Based on the description of maintenance, we don't anticipate take from maintenance and do not further analyze/discuss facility maintenance in this **Federal Register** notice.

Algonquin Pipeline Lateral Operation and Maintenance (O&M)

The O&M activities associated with the Algonquin Pipeline Lateral can be subdivided into two categories, Routine O&M Activities and Unplanned Repair Work.

A. Routine O&M Activities

The planned activities required for the O&M of the Algonquin Pipeline Lateral and Flowlines over a one year period are limited. Similar to the inspection of the NEG Port underwater components, the only planned O&M activity is the annual inspection of the cathodic protection monitors by a ROV. The monitors are located at the ends of the Algonquin Pipeline Lateral and the adjacent Flowlines. Each inspection activity will take approximately three days and will utilize a ROV launched from a vessel of opportunity. The most likely vessel will be similar to the NEG Port's normal support vessel referenced in NEG Port Maintenance section. This vessel is self-positioning and requires no anchors or use of thrusters. It will mobilize from Salem, Massachusetts, and will inspect the monitors in the vicinity of the NEG Port and at the point where the Algonquin Pipeline Lateral interconnects with Algonquin's HubLine. These activities will be performed during daylight hours and during periods of good weather.

B. Unplanned Pipeline Repair Activities

Unplanned O&M activities may be required from time to time at a location along the Algonquin Pipeline Lateral or along one of the Flowlines should the line become damaged or malfunction.

Should repair work be required, it is likely a dive vessel would be the main vessel used to support the repair work. The type of diving spread and the corresponding vessel needed to support the spread would be dictated by the type of repair work required and the water depth at the work location. In addition, the type of vessel used may vary depending upon availability. The duration of an unplanned activity would also vary depending upon the repair work involved (*e.g.,* repairing or replacing a section of the pipeline, connection, or valve) but can generally be assumed to take less than 40 work days to complete based on industry experience with underwater pipeline repairs.

A diving spread required to execute an unplanned activity might necessitate several vessels. Most likely the dive vessel would support a saturation diving spread and be moored at the work location using four anchors. This vessel would likely be accompanied by an attendant tug to assist with anchor placement. Once secured at the work location, the dive vessel would remain on site through the completion of the work, weather permitting. A crew/supply boat would be utilized to intermittently provide labor and supply transfers. Once or twice during the work, a tug may be required to bring a material barge to and from the location. While unlikely, there is a small possibility that a second dive vessel would be required to support the main dive vessel, depending upon the work activity. The second dive vessel would be on-site for a shorter work duration. These vessels would be supported from an onshore base located between Quincy, Massachusetts and Gloucester, Massachusetts.

The selection of a dive vessel will be driven by the technical requirements of the work. In addition, the degree of urgency required to address the work and the availability of vessels will also enter into the decision process for securing a dive vessel. It may be that a four point moored dive vessel either is not available or doesn't meet the technical capabilities required by the work. It then becomes possible that a dynamically positioned (DP) dive vessel may have to be utilized. The use of a DP dive vessel removes the need for an attendant tug to support the vessel since no anchors will be deployed. However, potential impacts related to noise are increased when a DP dive vessel is used. The noise generated by a DP dive vessel varies, and results from the use of the thrusters at various levels to maintain the vessel's position during the work depending upon currents, winds, waves and other forces acting on the vessel at the time of the work.

Comments and Responses

A notice of receipt and request for public comment on the application and proposed authorization was published on March 6, 2009 (74 FR 9801). During the 30-day public comment period, NMFS received comments from the Marine Mammal Commission (Commission).

Comment 1: The Commission recommends that NMFS issue the IHA provided that (a) all marine mammal mitigation, monitoring, and reporting measures identified in the **Federal Register** notice are included in the authorization; and (b) operations be suspended immediately if a dead or seriously injured right whale or other marine mammal is found in the vicinity of the operations and the death or injury could be attributable to the applicant's activities. Any suspension should remain in place until NMFS (1) has reviewed the situation and determined that further deaths or serious injuries are unlikely or (2) has issued regulations authorizing such takes under section 101(a)(5)(A) of the MMPA.

Response: NMFS concurs with the Commission's recommendation raised in the above comment, and extends the suspension requirement to any type of injury, not just serious injury, if it could be attributable to LNG activities.

Description of Marine Mammals in the Area of the Specified Activities

Marine mammal species that potentially occur in the vicinity of the Northeast Gateway facility include several species of cetaceans and pinnipeds: North Atlantic right whale (*Eubalaena glacialis*), humpback whale (*Megaptera novaeangliae*), fin whale (*Balaenoptera physalus*), minke whale (*B. acutorostrata*), long-finned pilot whale (*Globicephala melas*), Atlantic white-sided dolphin (*Lagenorhynchus acutus*), bottlenose dolphin (*Tursiops truncatus*), common dolphin (*Delphinus delphis*), killer whale (*Orcinus orca*), harbor porpoise (*Phocoena phocoena*), harbor seal (*Phoca vitulina*), and gray seal (*Halichoerus grypus*).

General information on these marine mammal species can also be found in Wursig *et al.* (2000) and in the NMFS Stock Assessment Reports (Waring *et al.*, 2008). This latter document is available at: *http://www.nefsc.noaa.gov/nefsc/publications/tm/tm205/*. An updated summary on several commonly sighted marine mammal species distribution and abundance in the vicinity of the proposed action area is provided below. Additional information on those species that may be affected by this activity is provided in detail in the

Federal Register published on March 6, 2009 (74 FR 9801).

Potential Effects of Noise on Marine Mammals

The effects of noise on marine mammals are highly variable, and can be categorized as follows (based on Richardson *et al.*, 1995): (1) The noise may be too weak to be heard at the location of the animal (*i.e.*, lower than the prevailing ambient noise level, the hearing threshold of the animal at relevant frequencies, or both); (2) The noise may be audible but not strong enough to elicit any overt behavioral response; (3) The noise may elicit reactions of variable conspicuousness and variable relevance to the well being of the marine mammal; these can range from temporary alert responses to active avoidance reactions such as vacating an area at least until the noise event ceases; (4) Upon repeated exposure, a marine mammal may exhibit diminishing responsiveness (habituation), or disturbance effects may persist; the latter is most likely with sounds that are highly variable in characteristics, infrequent and unpredictable in occurrence, and associated with situations that a marine mammal perceives as a threat; (5) Any anthropogenic noise that is strong enough to be heard has the potential to reduce (mask) the ability of a marine mammal to hear natural sounds at similar frequencies, including calls from conspecifics, and underwater environmental sounds such as surf noise; (6) If mammals remain in an area because it is important for feeding, breeding or some other biologically important purpose even though there is chronic exposure to noise, it is possible that there could be noise-induced physiological stress; this might in turn have negative effects on the well-being or reproduction of the animals involved; and (7) Very strong sounds have the potential to cause temporary or permanent reduction in hearing sensitivity. In terrestrial mammals, and presumably marine mammals, received sound levels must far exceed the animal's hearing threshold for there to be any temporary threshold shift (TTS) in its hearing ability. For transient sounds, the sound level necessary to cause TTS is inversely related to the duration of the sound. Received sound levels must be even higher for there to be risk of permanent hearing impairment. In addition, intense acoustic (or explosive events) may cause trauma to tissues associated with organs vital for hearing, sound production, respiration and other functions. This trauma may include minor to severe hemorrhage.

There are three general categories of sounds recognized by NMFS: continuous (such as shipping sounds), intermittent (such as vibratory pile driving sounds), and impulse. No impulse noise activities, such as blasting or standard pile driving, are associated with this project. The noise sources of potential concern are regasification/offloading (which is a continuous sound) and dynamic positioning of vessels using thrusters (an intermittent sound) from LNGRVs during docking at the NEG port facility and from repair vessels during Algonquin Pipeline Lateral repair and maintenance for diving support. Based on research by Malme *et al.* (1983; 1984), for both continuous and intermittent sound sources, Level B harassment is presumed to begin at received levels of 120-dB. The detailed description of the noise that would result from the proposed LNG Port operations and Pipeline Lateral O&M activities is provided in the **Federal Register** for the initial construction and operations of the NEG LNG Port facility and Pipeline Lateral in 2007 (72 FR 27077; May 14, 2007).

NEG Port Activities

Underwater noise generated at the NEG Port has the potential to result from two distinct actions, including closed-loop regasification of LNG and/or LNGRV maneuvering during coupling and decoupling with STL buoys. To evaluate the potential for these activities to result in underwater noise that could harass marine mammals, Excelerate Energy, LLC (Excelerate) conducted field sound survey studies during periods of March 21 to 25, 2005 and August 6 to 9, 2006 while the LNGRV *Excelsior* was both maneuvering and moored at the operational Gulf Gateway Port located 116 mi (187 km) offshore in the Gulf of Mexico (the Gulf) (see Appendices B and C of the NEG and Algonquin application). LNGRV maneuvering conditions included the use of both stern and bow thrusters required for dynamic positioning during coupling. These data were used to model underwater sound propagation at the NEG Port. The pertinent results of the field survey are provided as underwater sound source pressure levels as follows:

- Sound levels during closed-loop regasification ranged from 104 to 110 decibel linear (dBL). Maximum levels during steady state operations were 108 dBL.
- Sound levels during coupling operations were dominated by the periodic use of the bow and stern thrusters and ranged from 160 to 170 dBL.

Figures 1–1 and 1–2 of the NEG and Algonquin's revised MMPA permit application present the net acoustic impact of one LNGRV operating at the NEG Port. Thrusters are operated intermittently and only for relatively short durations of time. The resulting area within the 120 dB isopleth is less than 1 km^2 with the linear distance to the isopleths extending 430 m (1,411 ft). The area within the 180 dB isopleth is very localized and will not extend beyond the immediate area where LNGRV coupling operations are occurring.

The potential impacts to marine mammals associated with sound propagation from vessel movements, anchors, chains and LNG regasification/offloading could be the temporary and short-term displacement of seals and whales from within the 120-dB zones ensonified by these noise sources. Animals would be expected to re-occupy the area once the noise ceases.

Unplanned Pipeline Lateral Repair Activities

As discussed previously, pipeline repairs may be required from time to time should the pipeline become damaged or malfunction. While the need for repairs to underwater pipelines is typically infrequent, in the event that a pipeline repair is required, it is most likely that anchor-moored vessels will be used. If so, underwater noise will not be generated at the level of concern for marine mammals.

However, there is the potential that underwater noise will be generated within the 120 dB threshold for level B harassment for marine mammals if DP vessels are used to perform the work. Given the limited availability of DP dive support vessels, it is most likely that an anchor-moored dive vessel will be used, though the possibility that a DP vessel would be used cannot be ruled out. Depending on the nature of the repair, the work could last for up to 40 work days. The possibility that a DP vessel would be used to perform a pipeline repair is the only instance in which underwater noise will be generated that rises to or exceeds the 120-dB threshold for level B harassment in connection with Algonquin's ownership or operation of the Algonquin Pipeline Lateral.

In general, DP vessels are fitted with six thrusters of three main types: main propellers, tunnel thrusters and azimuth thrusters. Two or three tunnel thrusters are usually fitted in the bow. Stern tunnel thrusters are also common,

operating together but controlled individually, as are azimuth or compass thrusters placed in the rear. Azimuth thrusters are located beneath the bottom of the vessel and can be rotated to provide thrust in any direction. During vessel operation, the thrusters engage in varying numbers and at varying intensity levels, as needed to control and maintain vessel location based on sea and weather conditions. While at least one thruster is always engaged in at least partial capacity, higher noise levels are generated periodically when greater numbers of thrusters need to engage, and when thrusters are at closer to their full capacity. Thruster underwater noise levels are principally caused by cavitation, which is a combination of broadband noise and tonal sounds at discrete frequencies.

In August 2007, during construction of the NEG Port and Algonquin Pipeline Lateral, Northeast Gateway collected sound measurements of vessels used to support construction including crew boats, support tugs, and diver support vessels which required the steady use of thrusters as well as unassociated boat movements routinely occurring outside the immediate construction zone. These vessels are similar to those which may be employed during pipeline repair.

Based upon the measurement data collected, results showed no exceedance of the 180-dB level for potential Level A harassment during any of the monitoring periods in the acoustic far field ranging from 605 to 1,050 m (1,985 to 3,445 ft) (see Figure 1–3 of the NEG and Algonquin MMPA permit application). However, construction activities involving the use of DP vessels did exceed the 120-dB Level B behavioral harassment threshold for this sound type, principally at low and mid-range frequencies.

It is important to note, however, that even though measurements showed construction activities periodically resulted in the exceedances of the Level B behavioral harassment threshold, such received sound pressure levels may not in every instance be perceptible to marine life, as hearing thresholds are largely frequency-dependent and vary considerably from species to species. In addition, though ambient noise in shallow waters such as the Gulf of Maine tends to be highly variable in both time and location, existing elevated ambient conditions inherent within the Massachusetts Bay environment may effectively mask noise generated by future offshore repair work at short to moderate distances from where the work is occurring. This is particularly true during elevated wind and sea state conditions when the use of thrusters is more predominant. At the same time, the ambient underwater noise intensity levels will be higher during these periods as well.

Estimates of Take by Harassment

Northeast Gateway stated that the size of the ensonified 120-dB isopleth by LNGRV's decoupling would be less than 1 km^2 as measured in the Gulf of Mexico in 2005. However, due to the lack of more recent sound source verification and source measurement in Massachusetts Bay, NMFS used a more conservative spreading model to calculate the 120-dB isopleth. (This model was also used to establish 120-dB zone of influence (ZOI) for the previous IHAs issued to Northeast Gateway.) In the vicinity of the LNG Port, where the water depth is about 80 m (262 ft), the 120-dB radius is estimated to be 2.56 km (1.6 mi) maximum from the sound source during dynamic positioning for the container ship, making a maximum ZOI of 21 km^2 (8.1 mi^2). For shallow water depth (40 m or 131 ft) representative of the northern segment of the Algonquin Pipeline Lateral, the 120-dB radius is estimated to be 3.31 km (2.06 mi), and the associated ZOI is 34 km^2 (13.1 mi^2).

The basis for Northeast Gateway and Algonquin's ''take'' estimate is the number of marine mammals that would be exposed to sound levels in excess of 120 dB. For the NEG port facility operations, the take estimates are determined by multiplying the area of the LNGRV's ZOI (21 km^2) by local marine mammal density estimates, corrected to account for 50 percent more marine mammals that may be underwater, and then multiplying by the estimated LNG container ship visits per year. For the Algonquin Pipeline Lateral O&M activities, the take estimates are determined by multiplying the area of ZOI (34 km^2) resulting from the DP vessel used in repair by local marine mammal density estimates, corrected to account for 50 percent more marine mammals that may be underwater, and then multiplying by the number of dates O&M activities are conducted per year. In the case of data gaps, a conservative approach was used to ensure the potential number of takes is not underestimated, as described next.

NMFS recognizes that baleen whale species other than North Atlantic right whales have been sighted in the project area from May to November. However, the occurrence and abundance of fin, humpback, and minke whales is not well documented within the project area. Nonetheless, NMFS uses the data on cetacean distribution within Massachusetts Bay, such as those published by the National Centers for Coastal Ocean Science (NCCOS, 2006), to estimate potential takes of marine mammals species in the vicinity of project area.

The NCCOS study used cetacean sightings from two sources: (1) The North Atlantic Right Whale Consortium (NARWC) sightings database held at the University of Rhode Island (Kenney, 2001); and (2) the Manomet Bird Observatory (MBO) database, held at NMFS Northeast Fisheries Science Center (NEFSC). The NARWC data contained survey efforts and sightings data from ship and aerial surveys and opportunistic sources between 1970 and 2005. The main data contributors included: Cetacean and Turtles Assessment Program (CETAP), Canadian Department of Fisheries and Oceans, PCCS, International Fund for Animal Welfare, NOAA's NEFSC, New England Aquarium, Woods Hole Oceanographic Institution, and the University of Rhode Island. A total of 653,725 km (406,293 mi) of survey track and 34,589 cetacean observations were provisionally selected for the NCCOS study in order to minimize bias from uneven allocation of survey effort in both time and space. The sightings-per-unit-effort (SPUE) was calculated for all cetacean species by month covering the southern Gulf of Maine study area, which also includes the project area (NCCOS, 2006).

The MBO's Cetacean and Seabird Assessment Program (CSAP) was contracted from 1980 to 1988 by NMFS NEFSC to provide an assessment of the relative abundance and distribution of cetaceans, seabirds, and marine turtles in the shelf waters of the northeastern United States (MBO, 1987). The CSAP program was designed to be completely compatible with NMFS NEFSC databases so that marine mammal data could be compared directly with fisheries data throughout the time series during which both types of information were gathered. A total of 5,210 km (8,383 mi) of survey distance and 636 cetacean observations from the MBO data were included in the NCCOS analysis. Combined valid survey effort for the NCCOS studies included 567,955 km (913,840 mi) of survey track for small cetaceans (dolphins and porpoises) and 658,935 km (1,060,226 mi) for large cetaceans (whales) in the southern Gulf of Maine. The NCCOS study then combined these two data sets by extracting cetacean sighting records, updating database field names to match the NARWC database, creating geometry to represent survey tracklines and applying a set of data selection criteria

designed to minimize uncertainty and bias in the data used.

Owing to the comprehensiveness and total coverage of the NCCOS cetacean distribution and abundance study, NMFS calculated the estimated take number of marine mammals based on the most recent NCCOS report published in December 2006. A summary of seasonal cetacean distribution and abundance in the project area is provided in the **Federal Register** notice for the proposed IHA (74 FR 9801; March 6, 2009), in the Marine Mammals Affected by the Activity section. For a detailed description and calculation of the cetacean abundance data and sighting per unit effort (SPUE), please refer to the NCCOS study (NCCOS, 2006). These data show that the relative abundance of North Atlantic right, fin, humpback, minke, and pilot whales, and Atlantic white-sided dolphins for all seasons, as calculated by SPUE in number of animals per square kilometer, is 0.0082, 0.0097, 0.0265, 0.0059, 0.0407, and 0.1314 n/km, respectively.

In calculating the area density of these species from these linear density data, NMFS used 0.4 km (0.25 mi), which is a quarter the distance of the radius for visual monitoring (see Proposed Monitoring, Mitigation, and Reporting section below), as a conservative hypothetical strip width (W). Thus the area density (D) of these species in the project area can be obtained by the following formula:

D = SPUE/2W.

Based on this calculation method, the estimated take numbers per year for North Atlantic right, fin, humpback, minke, and pilot whales, and Atlantic white-sided dolphins by the NEG Port facility operations, which is an average of 65 visits by LNG container ships to the project area per year (or approximately 1.25 visits per week), operating the vessels' thrusters for dynamic positioning before offloading natural gas, corrected for 50 percent underwater, are 21, 25, 68, 15, 104, and 336, respectively.

The estimated take number per year for North Atlantic right, fin, humpback, minke, and pilot whales, and Atlantic white-side dolphin by the Algonquin Pipeline Lateral O&M activities, based on a maximum of 40 days by the operation of DP vessels for diver support, corrected for 50 percent underwater, are 21, 25, 68, 15, 104, and 335, respectively.

The total estimated take numbers of these species per year are: 42 North Atlantic right, 50 fin, 136 humpback, 30 minke, 208 pilot whales, and 671 Atlantic white-sided dolphins. These numbers represent a maximum of 12.9, 2.2, 15.0, 0.9, 0.7, and 1.1 percent of the affected species/stocks, respectively. Since it is very likely that individual animals could be ''taken'' by harassment multiple times, these percentages are the upper boundary because the actual number of individual animals being exposed or taken would be far less. There is no danger of injury, death, or hearing impairment from the exposure to these noise levels.

In addition, bottlenose dolphins, common dolphins, killer whales, harbor porpoises, harbor seals, and gray seals could also be taken by Level B harassment as a result of deepwater LNG port operations and Pipeline Lateral O&M activities. The numbers of estimated take of these species are not available because they are rare in the project area. The population estimates of these marine mammal species and stock in the west North Atlantic basin are 81,588; 120,743; 89,054; 99,340; and 195,000 for bottlenose dolphins, common dolphins, harbor porpoises, harbor seals, and gray seals, respectively (Waring *et al.*, 2008). No population estimate is available for the North Atlantic stock of killer whales, however, their occurrence within the proposed project area is rare. Since the Massachusetts Bay represents only a small fraction of the west North Atlantic basin where these animals occur, and these animals do not congregate in the vicinity of the project area, NMFS believes that only relatively small numbers of these marine mammal species would be potentially affected by the Northeast Gateway LNG deepwater project. From the most conservative estimates of both marine mammal densities in the project area and the size of the 120–dB zone of (noise) influence, the calculated number of individual marine mammals for each species that could potentially be harassed annually is small relative to the overall population size.

Potential Impact on Habitat

Operation of the NEG Port and Algonquin Pipeline Lateral will result in long-term effects on the marine environment, including alteration of seafloor conditions, continued disturbance of the seafloor, regular withdrawal of sea water, and regular generation of underwater noise. A small area (0.14 acre) along the Pipeline Lateral will be permanently altered (armored) at two cable crossings. In addition, the structures associated with the Port will occupy 4.8 acres of seafloor. An additional area of the seafloor of up to 38 acres will be subject to disturbance due to chain sweep while the buoys are occupied. The benthic community in the up-to 38 acres of soft bottom that may be swept by the anchor chains while EBRVs are docked will have limited opportunity to recover, so this area will experience a long-term reduction in benthic productivity.

Each LNGRV will require the withdrawal of an average of 4.97 million gallons per day of sea water for general ship operations during its 8-day stay at the Port. Plankton associated with the sea water will not likely survive this activity. Based on densities of plankton in Massachusetts Bay, it is estimated that sea water use during operations will consume, on a daily basis, about three 200 × 1,010 phytoplankton cells (about several hundred grams of biomass), 6.5 × 108 zooplankters (equivalent to about 1.2 kg of copepods), and on the order of 30,000 fish eggs and 5,000 fish larvae. Also, the daily removal of sea water will reduce the food resources available for planktivorous organisms. However, the removal of these species is minor relative to the overall area they occupy and unlikely to measurably affect the food sources available to marine mammals.

Monitoring and Mitigation Measures

For the proposed NEG LNG port operations and Algonquin Pipeline Lateral O&M activities, NMFS requires the following monitoring and mitigation measures.

Marine Mammal Observers and Training

For activities related to the NEG LNG port operations, all individuals onboard the LNGRVs responsible for the navigation and lookout duties on the vessel must receive training prior to assuming navigation and lookout duties, a component of which will be training on marine mammal sighting/reporting and vessel strike avoidance measures. Crew training of LNGRV personnel will stress individual responsibility for marine mammal awareness and reporting.

If a marine mammal is sighted by a crew member, an immediate notification will be made to the Person-in-Charge on board the vessel and the Northeast Port Manager, who will ensure that the required vessel strike avoidance measures and reporting procedures are followed.

For activities related to the Algonquin Pipeline Lateral O&M, two qualified Maine Mammal Observers (MMOs) will be assigned to each DP vessel (each operating individually in designated shifts to accommodate adequate rest

schedules). Their responsibility is to watch for marine mammals and to alert the construction crew supervisor if marine mammals are visually detected within the most conservatively estimated ZOI, within 2 mi (3.31 km) of the DP vessel, to allow for mitigating responses. MMOs will maintain logs at all times while on watch. All personnel will have experience in marine mammal detection and observation during marine construction. MMOs will maintain *in situ* records while on watch and therefore visual observation will not be affected. Additional MMOs may be assigned to additional vessels if auto-detection buoy (AB) data show sound levels from additional vessels in excess of 120 dB re 1 microPa, further than 100 m (328 ft) from the vessel.

Each MMO will scan the area surrounding the construction vessels for visual signs of non-vocalizing whales that may enter the construction area. Observations will take place from the highest available vantage point on the vessels. General 360° scanning will occur during the monitoring periods, and target scanning by the observer will occur when alerted of a whale presence.

Searching will take place at all hours of the day. Night-time observations will be conducted with the aid of a night-vision scope where practical. Observers, using binoculars, will estimate distances to marine mammals either visually or by using reticled binoculars. If higher vantage points (> 25 ft or 7.6 m) are available, distances can be measured using inclinometers. Position data will be recorded using hand-held or vessel global positioning system (GPS) units for each sighting, vessel position change, and any environmental change.

Environmental data to be collected will include Beaufort sea state, wind speed, wind direction, ambient temperature, precipitation, glare, and percent cloud cover. Wind and temperature data will be extracted from onboard meteorological stations (when available). Animal data to be collected include numbers of individuals, species, position, distance, behavior, direction of movement, and apparent reaction to construction activity. All data will be entered at the time of observation. Notes of activities will be kept and a daily report will be prepared and attached to the daily field form.

In addition, Northeast Gateway and Algonquin must ensure that vessel captains understand that noise generated from thrusters during DP is the most likely source of a ''take'' to North Atlantic right whale, therefore, DP vessel captains shall focus on reducing thruster power to the maximum extent practicable, taking into account diver safety. Likewise, vessel captains shall shut down thrusters whenever they are not needed.

In addition to visual monitoring, the Northeast Gateway and Algonquin shall work with NMFS, the Stellwagen Bank National Marine Sanctuary (SBNMS), and other scientists to install a passive acoustic detection system for detecting marine mammals within the project area, and provide early warnings for potential occurrence of right whales and other marine mammals in the vicinity of the project area. The number of passive acoustic detection buoys installed around the activity site will be commensurate with the type and spatial extent of maintenance/repair work required, but must be sufficient to detect vocalizing right whales within the 120–dB impact zone. The holder of this authorization shall provide empirically measured source level data from the acoustic recording units deployed in the LNG Port maintenance and repair area in a reasonable time to NMFS.

Distance and Noise Level for Cut-Off

For all whales near DP vessels, the MMO observation will be the principal detection tool available. If a North Atlantic right whale or other marine mammal is seen within the 2 mi (3.31 km) ZOI of a DP vessel or other construction vessel that has been shown to emit noises in excess of 120 dB re 1 microPa, then the MMO will alert the construction crew to minimize the use of thrusters until the animal has moved away unless there are divers in the water or an ROV is deployed.

During Algonquin Pipeline Lateral O&M, the following procedures would be followed upon detection of a marine mammal within 0.5 mi (0.8 km) of the repair vessels:

(1) The vessel superintendent or on-deck supervisor will be notified immediately. The vessel's crew will be put on a heightened state of alert. The marine mammal will be monitored constantly to determine if it is moving toward the Pipeline Lateral repair area. The observer is required to report all North Atlantic right whale sightings to NMFS, as soon as possible.

(2) If a marine mammal other than a right whale is sighted within or approaching at a distance of 100 yd (91 m), or if a right whale is sighted within or approaching to a distance of 500 yd (457 m) from the operating construction vessel and the nature of the repair activity at the time would not compromise either the health and safety of divers on the bottom or the integrity of the pipeline, construction vessel(s) will cease any movement and cease all activities that emit sounds reaching a received level of 120 dB re 1 microPa or higher as soon as practicable. The back-calculated source level, based on the most conservative cylindrical model of acoustic energy spreading, is estimated to be 139 dB re 1 microPa. Vessels transiting the repair area will also be required to maintain these separation distances.

(3) Repair work may resume after the marine mammal is positively reconfirmed outside the established zones (either 500 yd (457 m) or 100 yd (91 m), depending upon species).

Vessel Strike Avoidance

(1) All LNGRVs approaching or departing the port will comply with the Mandatory Ship Reporting (MSR) system to keep apprised of Dynamic Management Areas (DMAs) in the vicinity. Vessel operators will also receive active detections from an existing passive acoustic array prior to and during transit through the northern portion of the Boston TSS where the buoys are installed.

(2) In response to active right whale sightings or DMAs (detected acoustically or reported through other means such as the MSR or Sighting Advisory System (SAS)), and taking into account safety and weather conditions, LNGRVs will take appropriate actions to minimize the risk of striking whales, including reducing speed to 10 knots or less and alerting personnel responsible for navigation and lookout duties to concentrate their efforts.

(3) LNGRVs will maintain speeds of 12 knots or less while in the TSS until reaching the vicinity of the buoys (except during the seasons and areas defined below, when speed will be limited to 10 knots or less). At 1.86 mi (3 km) from the NEG port, speed will be reduced to 3 knots, and to less than 1 knot at 1,640 ft (500 m) from the buoy.

(4) LNGRVs will reduce transit speed to 10 knots or less over ground year-round in all waters bounded by straight lines connecting the following points in the order stated below. This area is known as the Off Race Point Seasonal Management Area (SMA) and tracks NMFS regulations at 50 CFR 224.105:

42°30′00.0″ N–069°45′00.0″ W; thence to 42°30′00.0″ N–070°30′00.0″ W; thence to 42°12′00.0″ N–070°30′00.0″ W; thence to 42°12′00.0″ N–070°12′00.0″ W; thence to 42°04′56.5″ N–070°12′00.0″ W; thence along charted mean high water line and inshore limits of COLREGS limit to a latitude of 41°40′00.0″ N; thence due east to 41°41′00.0″ N–069°45′00.0″ W; thence back to starting point.

(5) LNGRVs will reduce transit speed to 10 knots or less over ground from April 1–July 31 in all waters bounded

by straight lines connecting the following points in the order stated below. This area is also known as the Great South Channel SMA and tracks NMFS regulations at 50 CFR 224.105:

42°30′00.0″ N–69°45′00.0″ W
41°40′00.0″ N– 69°45′00.0″ W
41°00′00.0″ N– 69°05′00.0″ W
42°09′00.0″ N– 67°08′24.0″ W
42°30′00.0″ N– 67°27′00.0″ W
42°30′00.0″ N– 69°45′00.0″ W

(6) LNGRVs are not expected to transit Cape Cod Bay. However, in the event transit through Cape Cod Bay is required, LNGRVs will reduce transit speed to 10 knots or less over ground from January 1–May 15 in all waters in Cape Cod Bay, extending to all shorelines of Cape Cod Bay, with a northern boundary of 42°12′00.0″ N latitude.

(7) While under way, all repair/maintenance vessels must remain 500 yd (457 m) away from right whales and 100 yd (91 m) away from all other whales to the extent physically feasible, given navigational constraints as required by NMFS.

(8) All repair/maintenance vessels greater than or equal to 300 gross tons must maintain a speed of 10 knots or less. Vessels of less than 300 gross tons carrying supplies or crew between the shore and the construction site shall contact the Mandatory Ship Reporting (MSR) system, the USCG, or the construction site before leaving shore for reports of recent right whale sightings or active DMAs and, consistent with navigation safety, restrict speeds to 10 knots or less within 5 mi (8 km) of any sighting location and within any existing DMA.

(9) Vessels transiting through the Cape Cod Canal and Cape Cod Bay between January 1 and May 15 must reduce speed to 10 knots or less, follow the recommended routes charted by NMFS to reduce interactions between right whales and shipping traffic, and avoid identified aggregations of right whales in the eastern portion of Cape Cod Bay.

Research Passive Acoustic Monitoring (PAM) Program

Northeast Gateway shall monitor the noise environment in Massachusetts Bay in the vicinity of the NEG Port and Algonquin Pipeline Lateral using an array of 19 Marine Autonomous Recording Units (MARUs) that were deployed initially in April 2007 to collect data during the preconstruction and active construction phases of the NEG Port and Algonquin Pipeline Lateral. A description of the MARUs can be found in Appendix A of the NEG application. These 19 MARUs will remain in the same configuration during full operation of the NEG Port and Algonquin Pipeline Lateral. The MARUs collect archival noise data and are not designed to provide real-time or near-real-time information about vocalizing whales. Rather, the acoustic data collected by the MARUs shall be analyzed to document the seasonal occurrences and overall distributions of whales (primarily fin, humpback, and right whales) within approximately 10 nautical miles of the NEG Port, and shall measure and document the noise ''budget'' of Massachusetts Bay so as to eventually assist in determining whether an overall increase in noise in the Bay associated with the NEG Port and Algonquin Pipeline Lateral might be having a potentially negative impact on marine mammals. The overall intent of this system is to provide better information for both regulators and the general public regarding the acoustic footprint associated with long-term operation of the NEG Port and Algonquin Pipeline Lateral in Massachusetts Bay, and the distribution of vocalizing marine mammals during NEG Port and Algonquin Pipeline Lateral O&M activities (analyzed to assess impacts on marine mammals). In addition to the 19 MARUs, Northeast Gateway will deploy 10 ABs within the TSS for the operational life of the NEG Port and Algonquin Pipeline Lateral. A description of the ABs is provided in Appendix A of this NEG and Algonquin's application. The purpose of the ABs shall be to detect a calling North Atlantic right whale an average of 5 nm (9.26 km) from each AB (detection ranges will vary based on ambient underwater conditions). The AB system shall be the primary detection mechanism that alerts the LNGRV Master and/or Algonquin Pipeline support vessel captains to the occurrence of right whales, heightens LNGRV or pipeline support vessel awareness, and triggers necessary mitigation actions as described in the Marine Mammal Detection, Monitoring, and Response Plan included as Appendix A of the NEG application.

Northeast Gateway has engaged representatives from Cornell University's Bioacoustics Research Program (BRP) and the Woods Hole Oceanographic Institution (WHOI) as the consultants for developing, implementing, collecting, and analyzing the acoustic data; reporting; and maintaining the acoustic monitoring system.

Further information detailing the deployment and operation of arrays of 19 passive seafloor acoustic recording units (MARUs) centered on the terminal site and the 10 ABs that are to be placed at approximately 5-m (8.0-km) intervals within the recently modified TSS can be found in the Marine Mammal Detection, Monitoring, and Response Plan included as Appendix A of the NEG application.

Additional Mitigation Measures for Pipeline Repair During Right Whale Season

All maintenance/repair activities will be scheduled to occur between May 1 and November 30; however, in the event of unplanned/emergency repair work that cannot be scheduled during the preferred May–November work window, in addition to the aforementioned mitigation measures, the following additional mitigation measures will be implemented. This is because the occurrence of the North Atlantic right whale in the vicinity of the proposed NEG LNG Port is expected to increase between December and April.

(1) Between December 1 and April 30, if on-board MMOs do not have at least 0.5-mile visibility, they shall call for a shutdown. If dive operations are in progress, then they shall be halted and brought on board until visibility is adequate to see a half mile range. At the time of shutdown, the use of thrusters must be minimized. If there are potential safety problems due to the shutdown, the captain will decide what operations can safely be shut down.

(2) Prior to leaving the dock to begin transit, the barge will contact one of the MMOs on watch to receive an update of sightings within the visual observation area. If the MMO has observed a North Atlantic right whale within 30 minutes of the transit start, the vessel will hold for 30 minutes and again get a clearance to leave from the MMOs on board. MMOs will assess whale activity and visual observation ability at the time of the transit request to clear the barge for release.

(3) A half-day training course will be provided by the current MMO provider to designated crew members assigned to the transit barges and other support vessels. These designated crew members will be required to keep watch on the bridge and immediately notify the navigator of any whale sightings. All watch crew will sign into a bridge log book upon start and end of watch. Transit route, destination, sea conditions and any protected species sightings/mitigation actions during watch will be recorded in the log book. Any whale sightings within 1,000 m of the vessel will result in a high alert and slow speed of 4 knots or less and a

sighting within 750 m will result in idle speed and/or ceasing all movement.

(4) The material barges and tugs used in repair and maintenance shall transit from the operations dock to the work sites during daylight hours when possible provided the safety of the vessels is not compromised. Should transit at night be required, the maximum speed of the tug will be 5 knots.

(5) Consistent with navigation safety, all repair vessels must maintain a speed of 10 knots or less during daylight hours. All vessels will operate at 5 knots or less at all times within 5 km of the repair area.

Reporting

For any repair work associated with the Pipeline Lateral or other Port components, the holder of this authorization shall notify NMFS Headquarters Office of the Protected Resources, NMFS Northeast Regional Office, and SBNMS as soon as practicable after it is determined that repair work must be conducted. NEG/Algonquin shall continue to keep NOAA/NMFS apprised of repair work plans as further details (the time, location, and nature of the repair) become available.

During maintenance and repair of the Pipeline Lateral or other Port components, weekly status reports must be provided to NMFS using standardized reporting forms. The weekly reports should include data collected for each distinct marine mammal species observed in the project area in the Massachusetts Bay during the period of Port maintenance and repair activities. The weekly reports shall include the following information:

(1) Location, time, and the nature of the Pipeline Lateral maintenance and repair activities;

(2) Whether DP system is operated and, if so, the number of thrusters being used and the time and duration of DP operation;

(3) Marine mammals observed in the area (numbers of individuals, species, age group, and initial behavior);

(4) The distance of observed marine mammals from the maintenance and repair activities;

(5) Whether there are changes of marine mammal behaviors during the observation;

(6) Whether any mitigation measures (power-down, shutdown, etc.) are implemented;

(7) Weather condition (Beaufort sea state, wind speed, wind direction, ambient temperature, precipitation, and percent cloud cover etc.);

(8) Condition of the observation; and (Visibility and glare); and

(9) Details of passive acoustic detections and any action taken in response to those detections.

In addition, the Northeast Port Project area is within the Mandatory Ship Reporting Area (MSRA), so all vessels entering and exiting the MSRA will report their activities to WHALESNORTH. During all phases of the Northeast Gateway LNG Port operations and the Algonquin Pipeline Lateral O&M activities, sightings of any injured or dead marine mammals will be reported immediately to the USCG or NMFS, regardless of whether the injury or death is caused by project activities.

An annual report on marine mammal monitoring and mitigation would be submitted to NMFS Office of Protected Resources and NMFS Northeast Regional Office within 90 days after the expiration of an LOA. The annual report shall include data collected for each distinct marine mammal species observed in the project area in the Massachusetts Bay during the period of LNG facility operation. Description of marine mammal behavior, overall numbers of individuals observed, frequency of observation, and any behavioral changes and the context of the changes relative to operation activities shall also be included in the annual report.

ESA

On February 5, 2007, NMFS concluded consultation with MARAD and the USCG, under section 7 of the ESA, on the proposed construction and operation of the Northeast Gateway LNG facility and issued a biological opinion concluding that the construction and operation of the Northeast Gateway LNG terminal may adversely affect, but is not likely to jeopardize, the continued existence of northern right, humpback, and fin whales, and is not likely to adversely affect sperm, sei, or blue whales and Kemp's ridley, loggerhead, green or leatherback sea turtles.

On November 15, 2007, Northeast Gateway and Algonquin submitted a letter to NMFS requesting a modification to the IHA in effect at the time to allow LNG Port construction to extend into December 2007. Upon reviewing Northeast Gateway's weekly marine mammal monitoring reports submitted under the previous IHA, NMFS recognized that the take of some marine mammals resulting from construction of the LNG Port and Pipeline Lateral by Level B behavioral harassment likely had exceeded the original take estimates in the incidental take statement (ITS). Therefore, NMFS Northeast Region (NER) reinitiated consultation with MARAD and USCG on the construction and operation of the Northeast Gateway LNG facility. On November 30, 2007, NMFS NER issued a revised biological opinion, reflecting the revised construction time period and including a revised ITS. This revised biological opinion concluded that the construction and operation of the Northeast Gateway LNG terminal may adversely affect, but is not likely to jeopardize, the continued existence of northern right, humpback, and fin whales, and is not likely to adversely affect sperm, sei, or blue whales. NMFS has concluded that issuance of an IHA for the operations of the LNG port facility would not have impacts beyond what was analyzed in the November 30, 2007, biological opinion.

For an IHA that includes Pipeline Lateral maintenance and repair activities by Algonquin, NMFS reinitiated consultation with NMFS NER, which is still in process. NMFS plans to modify the IHA to include maintenance and repair activities once the section 7 consultation is completed, provided that a non-jeopardy determination for ESA-listed species is reached.

NEPA

MARAD and the USCG released a Final EIS/Environmental Impact Report (EIR) for the proposed Northeast Gateway Port and Pipeline Lateral. A notice of availability was published by MARAD on October 26, 2006 (71 FR 62657). The Final EIS/EIR provides detailed information on the proposed project facilities, construction methods and analysis of potential impacts on marine mammal.

NMFS was a cooperating agency (as defined by the Council on Environmental Quality (40 CFR 1501.6)) in the preparation of the Draft and Final EISs. NMFS has reviewed the Final EIS and has adopted it. Therefore, the preparation of another EIS or EA is not warranted.

Determinations

NMFS has determined that the operation and maintenance and repair activities of the Northeast Gateway Port facility and Pipeline Lateral may result, at worst, in a temporary modification in behavior of small numbers of certain species of marine mammals that may be in close proximity to the Northeast Gateway LNG facility and associated pipeline. These activities are expected to result in some local short-term displacement only of the affected species or stocks of marine mammals. Taking these two factors together, NMFS

concludes that the activity will have no more than a negligible impact on the affected species or stocks, as there will be no expected effects on annual rates of survival and reproduction of these species or stocks. This determination is further supported by the required mitigation, monitoring, and reporting measures described in this document.

As a result of implementation of the described mitigation and monitoring measures, no take by injury or death would be requested, anticipated or authorized, and the potential for temporary or permanent hearing impairment is very unlikely due to the relatively low noise levels (and consequently small zone of impact relative to the size of Massachusetts Bay).

While the number of marine mammals that may be harassed will depend on the distribution and abundance of marine mammals in the vicinity of the LNG Port facility, the estimated numbers of marine mammals to be harassed are small relative to the affected species or stock sizes.

These determinations also apply to an IHA issued only for take incidental to operations of the Deepwater Port facility, which is a subset of the activities analyzed in this **Federal Register** Notice of Issuance of an IHA and the related Federal Register Notice of Proposed Issuance of an IHA.

Authorization

NMFS has issued an IHA to Northeast Gateway for conducting LNG Port facility operations in Massachusetts Bay, provided the previously mentioned mitigation, monitoring, and reporting requirements are incorporated. NMFS plans to modify the IHA to include Pipeline Lateral operations and maintenance/repair activities by Algonquin once the ESA section 7 consultation is completed, provided that a non-jeopardy determination for ESA-listed species is reached.

Dated: August 28, 2009.

Helen M. Golde,

Deputy Director, Office of Protected Resources, National Marine Fisheries Service.

[FR Doc. E9–21328 Filed 9–2–09; 8:45 am]

BILLING CODE 3510–22–P

DEPARTMENT OF EDUCATION

Notice of Proposed Information Collection Request

AGENCY: Department of Education.

ACTION: Correction notice.

SUMMARY: On August 27, 2009, the Department of Education published a comment period notice in the **Federal Register** (Page 43686, Column 3) for the emergency information collection, ''I Am What I Learn.'' The number burden hours is hereby corrected to 2,667. The Director, Regulatory Information Management Services, Office of Management, hereby issues a correction notice as required by the Paperwork Reduction Act of 1995.

Dated: August 28, 2009.

Angela C. Arrington,

Director, Information Collection Clearance Division, Regulatory Information Management Services, Office of Management.

[FR Doc. E9–21202 Filed 9–2–09; 8:45 am]

BILLING CODE P

DEPARTMENT OF EDUCATION

Call for Nominations for Service as a Member of the National Assessment Governing Board

AGENCY: U.S. Department of Education, National Assessment Governing Board.

SUMMARY: The Secretary of Education, the Honorable Arne Duncan, and the National Assessment Governing Board seek your assistance in identifying qualified individuals to serve as members of the Governing Board for service terms beginning October 1, 2010.

SUPPLEMENTARY INFORMATION: The National Assessment Governing Board is established under section 412 of the National Education Statistics Act of 1994, as amended. In 1988 Congress passed legislation creating the Board, which is responsible for setting policy for the National Assessment of Educational Progress (NAEP)—also known as The Nation's Report Card. The legislation has been amended and reauthorized several times since 1988, most recently in 2002. The statute provides that ''* * * the Secretary and the Assessment Board shall ensure at all times that the membership of the Assessment Board reflects regional, racial, gender and cultural balance and diversity—and that the Assessment Board exercises its independent judgment, free from inappropriate influences and special interests.'' Currently, the Board is comprised of 26 members who are widely representative of our nation and who serve four-year terms. More detailed material about the Governing Board and NAEP is available at *http://www.nagb.org.*

As Board member vacancies occur, new members are appointed by the Secretary from among candidates forwarded to the Secretary by the Board. The Board solicits nominees via broad outreach to organizations, and individuals. For each vacant position, the Board nominates six persons who, by reason of experience or training, are qualified to serve as a Board member in a particular category.

For 2010 the Board must nominate candidates for five positions in the following five categories:

1. Chief State School Officer
2. Fourth Grade Teacher
3. Eighth Grade Teacher
4. General Public/Parent
5. Secondary School Principal

The Board invites nominations of potential candidates in one or more of the five categories listed above. For the Board to consider a candidate, it is essential to have the following information for each individual being nominated:

Nominating letter. This letter should state the category for which the individual is being nominated, and describe the candidate's qualifications as they relate to the Board's policy responsibilities for the National Assessment of Educational Progress.

Full resume or curriculum vitae. A full resume or vitae is necessary to evaluate a candidate's qualifications. Please note that a short biographical sketch is not sufficient for this purpose. To receive full consideration, all recommendations must be received by the Governing Board no later than September 30, 2009. The Board is seeking the very best nominees to recommend to the Secretary, and in doing so, to have the broadest possible representation. Current members of the Board who have not completed two full terms, and who are otherwise eligible, may be re-nominated.

Board members are considered special Federal employees. As such, they receive an honorarium while attending Board meetings; must abide by applicable laws and policies, including conflict of interest regulations; and are reimbursed for travel and other expenses in accordance with Federal Travel Regulations. The Board meets regularly four times a year, and committees of the Board meet at other times, as necessary.

Nominations may be submitted via mail, e-mail, or fax to: Dr. Mary Crovo, Deputy Executive Director, National Assessment Governing Board, 800 North Capitol Street, NW., Suite 825, Washington, DC 20002–4233, *Phone:* (202) 357–6938, *Fax:* (202) 357–6945, *E-mail: Mary.Crovo@ed.gov.*

FOR FURTHER INFORMATION CONTACT: Mary Crovo, Deputy Executive Director, National Assessment Governing Board, 800 North Capitol Street, NW., Suite 825, Washington, DC, 20002–4233, *Telephone:* (202) 357–6938.

Electronic Access to This Document: You may view this document, as well as all other documents of this Department published in the **Federal Register,** in text or Adobe Portable Document Format (PDF) on the Internet at the following site: *http://www.ed.gov/news/fedregister/index.html* To use PDF you must have Adobe Acrobat Reader, which is available free at this site. If you have questions about using PDF, call the U.S. Government Printing Office (GPO), toll free at 1–888–293–6498; or in the Washington, DC, area at (202) 512–1530.

Note: The official version of this document is the document published in the **Federal Register**. Free Internet access to the official edition of the **Federal Register** and the Code of Federal Regulations is available on GPO Access at: *http://www.gpoaccess.gov/nara/index.html.*

Dated: August 31, 2009.

Cornelia Orr,

Executive Director, National Assessment Governing Board, U.S. Department of Education.

[FR Doc. E9–21305 Filed 9–2–09; 8:45 am]

BILLING CODE 4000–01–P

DEPARTMENT OF ENERGY

Federal Energy Regulatory Commission

[Project Nos. 3041–004; 13382–000]

Mackay Bar Corporation; Notice of Application Accepted for Filing, Soliciting Motions To Intervene and Protests, Ready for Environmental Analysis, and Soliciting Comments, Recommendations, and Terms and Conditions

August 27, 2009.

Take notice that the following hydroelectric application has been filed with the Commission and is available for public inspection:

a. *Type of Application:* Surrender of License and Conduit Exemption.

b. *Project Nos.:* 3041–004 & 13382–000.

c. *Date Filed:* April 28, 2008.

d. *Applicant:* Mackay Bar Corporation.

e. *Name of Project:* Hettinger Hydroelectric Project.

f. *Location:* On an irrigation system at Hettinger Ranch, on Smith Creek. in Idaho County, Idaho.

g. *Filed Pursuant to:* Federal Power Act, 16 U.S.C. 791a–825r.

h. *Applicant Contact:* Ms. Yvonne Goundry, General Manager, Mackay Bar Corporation, P.O. Box 7968, Boise, Idaho 83707, phone (208) 336–0150.

i. *FERC Contact:* Robert Bell, (202) 502–6062.

j. *Status of Environmental Analysis:* The surrender request in the application is ready for environmental analysis at this time. The Commission is requesting comments, reply comments, and recommendations for both the Surrender request and the Conduit Exemption requests. The Commission is also requesting terms and conditions for the Conduit Exemption request.

k. *Deadline for filing responsive documents:* The Commission directs, pursuant to section 4.34(b) of the Regulations (see Order No. 533, issued May 8, 1991, 56 FR 23108, May 20, 1991) that all comments, motions to intervene, protests, recommendations, terms and conditions, and prescriptions concerning the application be filed within 60 days from the issuance date of this notice. All reply comments are due 105 days from the issuance date of this notice. All documents (original and eight copies) should be filed with: Secretary, Federal Energy Regulatory Commission, 888 First Street, NE., Washington, DC 20426. Please include the project numbers (P–3041–004 & 13382–000) on any comments or motions filed.

The Commission's Rules of Practice and Procedure require all intervenors filing documents with the Commission to serve a copy of that document on each person whose name appears on the official service list for the project. Further, if an intervenor files comments or documents with the Commission relating to the merits of an issue that may affect the responsibilities of a particular resource agency, they must also serve a copy of the document on that resource agency. A copy of any motion to intervene must also be served upon each representative of the applicant specified in a particular application.

l. *Description of Request:* We consider the application filed on April 28, 2008, as consisting of two requests: A surrender of license application under P–3041 and a conduit exemption application under P–13382.

a. *Surrender of license:* The applicant proposes to surrender the license for the Hettinger Hydroelectric Project No. 3041. The applicant proposes to decommission and remove the following project facilities: Powerhouse, disconnect penstock, disconnect exhaust pipe, and intake. The project's powerhouse will be relocated and used for the conduit exemption project described in section (b) below. The applicant proposes to restore the site following removal of the facilities.

b. *Conduit Exemption:* The applicant proposes a conduit exemption for the Hettinger Hydroelectric Project No. 13382–000. The proposed project would be located on its irrigation system in Idaho County, Idaho, and would consist of: A new intake structure, a penstock, a powerhouse containing one generating unit having an installed capacity of 17.9 kilowatts, and appurtenant facilities. The applicant consulted with Federal, State, local agencies, and other parties with potential interest, during the conduit exemption application process. The Idaho Department of Fish and Game has already provided its terms and conditions on May 27, 2008, however, they were filed under Project No. 3041. On October 30, 2008, we issued a public notice of the Conduit Exemption application soliciting comments, motions to intervene and competing applications. In this notice we are only soliciting ''Terms and Conditions''.

m. *Locations of the Application:* A copy of the application is available for inspection and reproduction at the Commission's Public Reference Room, located at 888 First Street, NE., Room 2A, Washington, DC 20426, or by calling (202) 502–8371. This filing may also be viewed on the Commission's Web site at *http://www.ferc.gov* using the ''eLibrary'' link. Enter the docket number excluding the last three digits in the docket number field to access the document. You may also register online at *http://www.ferc.gov/docs-filing/esubscription.asp* to be notified via e-mail of new filings and issuances related to this or other pending projects. For assistance, call 1–866–208–3676 or e-mail *FERCOnlineSupport@ferc.gov*, for TTY, call (202) 502–8659. A copy is also available for inspection and reproduction at the address in item (h) above.

n. *Mailing list:* Individuals desiring to be included on the Commission's mailing list should so indicate by writing to the Secretary of the Commission.

o. *Comments, Protests, or Motions to Intervene:* Anyone may submit comments, a protest, or a motion to intervene in accordance with the requirements of Rules of Practice and Procedure, 18 CFR 385.210, .211, .214. In determining the appropriate action to take, the Commission will consider all protests or other comments filed, but only those who file a motion to intervene in accordance with the Commission's Rules may become a party to the proceeding. Any comments, protests, or motions to intervene must be received on or before the specified comment date for the particular application (see item (j) above).

p. *Filing and Service of Responsive Documents:* All filings must: (1) For the *Surrender of License Request:* Bear in all

capital letters the title ''PROTEST'', ''MOTION TO INTERVENE'', ''COMMENTS,'' ''REPLY COMMENTS,'' ''RECOMMENDATIONS,'' or in the case of the *Conduit Exemption request* ''TERMS AND CONDITIONS''; (2) set forth in the heading the name of the applicant and the project number of the application to which the filing responds; (3) furnish the name, address, and telephone number of the person protesting or intervening; and (4) otherwise comply with the requirements of 18 CFR 385.2001 through 385.2005. All comments, motions to intervene or protests must set forth their evidentiary basis and otherwise comply with the requirements of 18 CFR 4.34(b). All comments, motions to intervene or protests should relate to project works which are the subject of the license surrender. Agencies may obtain copies of the application directly from the applicant. A copy of any protest or motion to intervene must be served upon each representative of the applicant specified in the particular application. If an intervener files comments or documents with the Commission relating to the merits of an issue that may affect the responsibilities of a particular resource agency, they must also serve a copy of the document on that resource agency. A copy of all other filings in reference to this application must be accompanied by proof of service on all persons listed in the service list prepared by the Commission in this proceeding, in accordance with 18 CFR 4.34(b) and 385.2010.

q. *e-Filing:* Comments, motions to intervene, protests, recommendations, or terms and conditions may be filed electronically via the Internet in lieu of paper. See, 18 CFR 385.2001(a)(1)(iii) and the instructions on the Commission's Web site at *http://www.ferc.gov* under the ''e Filing'' link. The Commission strongly encourages electronic filings.

Kimberly D. Bose,

Secretary.

[FR Doc. E9–21238 Filed 9–2–09; 8:45 am]

BILLING CODE 6717–01–P

DEPARTMENT OF ENERGY

Federal Energy Regulatory Commission

[Docket No. DI09–12–000]

Northwestern Wisconsin Electric Company; Notice of Petition for Declaratory Order and Soliciting Comments, Motions To Intervene, and/or Protests

August 27, 2009.

Take notice that the following application has been filed with the Commission and is available for public inspection:

a. *Application Type:* Petition for Declaratory Order.

b. *Docket No:* DI09–12–000.

c. *Date Filed:* July 27, 2009.

d. *Applicant:* Northwestern Wisconsin Electric Company.

e. *Name of Project:* Clam Falls Hydroelectric Project.

f. *Location:* The Clam Falls Hydroelectric Project is located on the Clam River in Clam Falls, Polk County, Wisconsin. The project is not located on Federal land.

g. *Filed Pursuant to:* Section 23(b)(1) of the Federal Power Act, 16 U.S.C. 817(b).

h. *Applicant Contact:* Charles Alsberg, North American Hydro Holdings, 116 N. State Street, P.O. Box 167, Neshkoro, WI 54960; Telephone: (920) 293–4628, ext. 14; FAX: (920) 293–8087; E-mail: *chuck@nahydro.com.*

i. *FERC Contact:* Any questions on this notice should be addressed to Henry G. Ecton (202) 502–8768, or E-mail: *henry.ecton@ferc.gov.*

j. *Deadline for Filing Comments and/or Motions:* September 28, 2009.

All documents (original and eight copies) should be filed with: Secretary, Federal Energy Regulatory Commission, 888 First Street, NE., Washington, DC 20426. Comments, protests, and interventions may be filed electronically via the Internet in lieu of paper. Any questions, please contact the Secretary's Office. See, 18 CFR 385.2001(a)(1)(iii) and the instructions on the Commission's Web site at: *http://www.ferc.gov.*

Please include the docket number (DI09–12–000) on any protests, comments or motions filed.

k. *Description of Project:* The existing run-of-river project consists of: (1) A reservoir with a surface area of 127 acres; (2) an approximately 130-foot-long, 36-foot-high concrete spillway and forebay; (3) a 41-foot-long, 20-foot-wide powerhouse containing two generators with a combined capacity of 208 kW; (4) a 187-foot-long transmission line; and (5) appurtenant facilities.

When a Petition for Declaratory Order is filed with the Federal Energy Regulatory Commission, the Federal Power Act requires the Commission to investigate and determine if the interests of interstate or foreign commerce would be affected by the project. The Commission also determines whether or not the project: (1) Would be located on a navigable waterway; (2) would occupy or affect public lands or reservations of the United States; (3) would utilize surplus water or water power from a government dam; or (4) if applicable, has involved or would involve any construction subsequent to 1935 that may have increased or would increase the project's head or generating capacity, or have otherwise significantly modified the project's pre-1935 design or operation.

l. *Locations of the application:* Copies of this filing are on file with the Commission and are available for public inspection. This filing may be viewed on the Web at *http://www.ferc.gov* using the ''eLibrary'' link. Enter the docket number excluding the last three digits in the docket number field to access the document. For assistance, please contact FERC Online Support at *FERCOnlineSupport@ferc.gov* or toll-free at (866) 208–3676, or TTY, contact (202) 502–8659.

m. Individuals desiring to be included on the Commission's mailing list should so indicate by writing to the Secretary of the Commission.

n. *Comments, Protests, or Motions to Intervene:* Anyone may submit comments, a protest, or a motion to intervene in accordance with the requirements of Rules of Practice and Procedure, 18 CFR 385.210, .211, .214. In determining the appropriate action to take, the Commission will consider all protests or other comments filed, but only those who file a motion to intervene in accordance with the Commission's Rules may become a party to the proceeding. Any comments, protests, or motions to intervene must be received on or before the specified comment date for the particular application.

o. *Filing and Service of Responsive Documents:* any filings must bear in all capital letters the title ''COMMENTS'', ''PROTESTS'', AND/OR ''MOTIONS TO INTERVENE'', as applicable, and the Docket Number of the particular application to which the filing refers. A copy of any motion to intervene must also be served upon each representative of the applicant specified in the particular application.

p. *Agency Comments:* Federal, State, and local agencies are invited to file

comments on the described application. A copy of the application may be obtained by agencies directly from the applicant. If an agency does not file comments within the time specified for filing comments, it will be presumed to have no comments. One copy of an agency's comments must also be sent to the applicant's representatives.

Kimberly D. Bose,

Secretary.

[FR Doc. E9–21242 Filed 9–2–09; 8:45 am]

BILLING CODE 6717–01–P

DEPARTMENT OF ENERGY

Federal Energy Regulatory Commission

[Project No. 2413–113]

Georgia Power Company; Notice of Application for Amendment of License and Soliciting Comments, Motions To Intervene, and Protests

August 27, 2009.

Take notice that the following hydroelectric application has been filed with the Commission and is available for public inspection:

a. *Application Type:* Non-Project Use of Project Lands and Waters.

b. *Project No:* 2413–113.

c. *Date Filed:* August 24, 2009.

d. *Applicant:* Georgia Power Company.

e. *Name of Project:* Wallace Dam Project.

f. *Location:* The proposed non-project use would be located at the Reynolds Plantation on Lake Oconee, in Greene County, Georgia.

g. *Filed Pursuant to:* Federal Power Act, 16 U.S.C. 791a–825r.

h. *Applicant Contact:* Mr. Herbie Johnson, Lake Resources Manager, 125 Wallace Dam Road NE, Eatonton, GA 31024, telephone 706–485–8704.

i. *FERC Contact:* Lorance Yates, telephone 678–245–3084, and e-mail: *lorance.yates@ferc.gov.*

j. *Deadline for Filing Comments, Motions To Intervene, and Protests:* September 28, 2009.

All documents (original and eight copies) should be filed with: Secretary, Federal Energy Regulatory Commission, 888 First Street, NE., Washington, DC 20426.

The Commission's Rules of Practice require all interveners filing documents with the Commission to serve a copy of that document on each person on the official service list for the project. Further, if an intervener files comments or documents with the Commission relating to the merits of an issue that may affect the responsibilities of a particular resource agency, they must also serve a copy of the document on that resource agency. A copy of any motion to intervene must also be served upon each representative of the Applicant specified in the particular application.

k. *Description of Request:* Georgia Power Company filed an application seeking Commission authorization to permit the construction of a vehicular bridge on Lake Oconee, at the Reynolds Plantation, in Greene County, Georgia. Specifically, the proposed bridge would be 450 feet in length and consist of reinforced concrete beams with either steel pile or shallow foundation construction. The bridge would occupy 0.22 acre of project land (.02 acre for reinforced concrete pilings plus .20 acre under the bridge) and 154 linear feet of shoreline. All required approvals from Greene County and the state of Georgia would be obtained before implementation of the proposal.

l. *Locations of the Application:* A copy of the application is available for inspection and reproduction at the Commission's Public Reference Room, located at 888 First Street, NE., Room 2A, Washington, DC 20426, or by calling (202) 502–8371. This filing may also be viewed on the Commission's Web site at *http://www.ferc.gov* using the ''eLibrary'' link. Enter the docket number excluding the last three digits in the docket number field to access the document. You may also register online at *http://www.ferc.gov/docs-filing/esubscription.asp* to be notified via e-mail of new filings and issuances related to this or other pending projects. For assistance, call 1–866–208–3372 or e-mail *FERCOnlineSupport@ferc.gov;* for TTY, call (202) 502–8659. A copy is also available for inspection and reproduction at the address in item (h) above.

m. Individuals desiring to be included on the Commission's mailing list should so indicate by writing to the Secretary of the Commission.

n. *Comments, Protests, or Motions To Intervene:* Anyone may submit comments, a protest, or a motion to intervene in accordance with the requirements of Rules of Practice and Procedure, 18 CFR 385.210, .211, .214. In determining the appropriate action to take, the Commission will consider all protests or other comments filed, but only those who file a motion to intervene in accordance with the Commission's Rules may become a party to the proceeding. Any comments, protests, or motions to intervene must be received on or before the specified comment date for the particular application.

o. Any filings must bear in all capital letters the title ''COMMENTS'', ''PROTEST'', or ''MOTION TO INTERVENE'', as applicable, and the Project Number of the particular application to which the filing refers.

p. *Agency Comments:* Federal, State, and local agencies are invited to file comments on the described application. A copy of the application may be obtained by agencies directly from the Applicant. If an agency does not file comments within the time specified for filing comments, it will be presumed to have no comments. One copy of an agency's comments must also be sent to the Applicant's representatives.

q. Comments, protests and interventions may be filed electronically via the Internet in lieu of paper. See, 18 CFR 385.2001(a)(1)(iii) and the instructions on the Commission's Web site at *http://www.ferc.gov* under the ''e-Filing'' link.

Kimberly D. Bose,

Secretary.

[FR Doc. E9–21246 Filed 9–2–09; 8:45 am]

BILLING CODE 6717–01–P

DEPARTMENT OF ENERGY

Federal Energy Regulatory Commission

[Docket No. DI09–11–000]

Dahlberg Light and Power Company; Notice of Petition for Declaratory Order and Soliciting Comments, Motions To Intervene, and/or Protests

August 27, 2009.

Take notice that the following application has been filed with the Commission and is available for public inspection:

a. *Application Type:* Petition for Declaratory Order.

b. *Docket No:* DI09–11–000.

c. *Date Filed:* July 27, 2009.

d. *Applicant:* Dahlberg Light and Power Company.

e. *Name of Project:* Gordon Hydroelectric Project.

f. *Location:* The Gordon Hydroelectric Project is located on the Eau Claire River in Gordon, Douglas County, Wisconsin. The project is not located on federal land.

g. *Filed Pursuant to:* Section 23(b)(1) of the Federal Power Act, 16 U.S.C. 817(b).

h. *Applicant Contact:* Charles Alsberg, North American Hydro Holdings, 116 N. State Street, P.O. Box 167, Neshkoro, WI 54960; Telephone: (920) 293–4628, ext.

14; Fax: (920) 293–8087; E-mail: *chuck@nahydro.com.*

i. *FERC Contact:* Any questions on this notice should be addressed to Henry G. Ecton (202) 502–8768, or E-mail: *henry.ecton@ferc.gov.*

j. *Deadline for Filing Comments and/or Motions:* September 28, 2009.

All documents (original and eight copies) should be filed with: Secretary, Federal Energy Regulatory Commission, 888 First Street, NE., Washington, DC 20426. Comments, protests, and interventions may be filed electronically via the Internet in lieu of paper. Any questions, please contact the Secretary's Office. See, 18 CFR 385.2001(a)(1)(iii) and the instructions on the Commission's Web site at: *http://www.ferc.gov*.

Please include the docket number (DI09–11–000) on any protests, comments or motions filed.

k. *Description of Project:* The existing run-of-river project consists of: (1) A reservoir with a storage capacity of 740-acre-feet; (2) a 62-foot-long, 25-foot-wide, 34-foot-high concrete spillway and forebay, with two earthen embankments approximately 1,500-feet-long; (3) a powerhouse containing two generators with a combined capacity of 257 kW; (4) a 739-foot-long transmission line; and (5) appurtenant facilities.

When a Petition for Declaratory Order is filed with the Federal Energy Regulatory Commission, the Federal Power Act requires the Commission to investigate and determine if the interests of interstate or foreign commerce would be affected by the project. The Commission also determines whether or not the project: (1) Would be located on a navigable waterway; (2) would occupy or affect public lands or reservations of the United States; (3) would utilize surplus water or water power from a government dam; or (4) if applicable, has involved or would involve any construction subsequent to 1935 that may have increased or would increase the project's head or generating capacity, or have otherwise significantly modified the project's pre-1935 design or operation.

l. *Locations of the Application:* Copies of this filing are on file with the Commission and are available for public inspection. This filing may be viewed on the Web at *http://www.ferc.gov* using the ''eLibrary'' link. Enter the docket number excluding the last three digits in the docket number field to access the document. For assistance, please contact FERC Online Support at *FERCOnlineSupport@ferc.gov* or toll-free at (866) 208–3676, or TTY, contact (202) 502–8659.

m. Individuals desiring to be included on the Commission's mailing list should so indicate by writing to the Secretary of the Commission.

n. *Comments, Protests, or Motions To Intervene*—Anyone may submit comments, a protest, or a motion to intervene in accordance with the requirements of Rules of Practice and Procedure, 18 CFR 385.210, .211, .214. In determining the appropriate action to take, the Commission will consider all protests or other comments filed, but only those who file a motion to intervene in accordance with the Commission's Rules may become a party to the proceeding. Any comments, protests, or motions to intervene must be received on or before the specified comment date for the particular application.

o. *Filing and Service of Responsive Documents*—Any filings must bear in all capital letters the title ''COMMENTS'', ''PROTESTS'', and/or ''MOTIONS TO INTERVENE'', as applicable, and the Docket Number of the particular application to which the filing refers. A copy of any motion to intervene must also be served upon each representative of the applicant specified in the particular application.

p. *Agency Comments*—Federal, state, and local agencies are invited to file comments on the described application. A copy of the application may be obtained by agencies directly from the applicant. If an agency does not file comments within the time specified for filing comments, it will be presumed to have no comments. One copy of an agency's comments must also be sent to the applicant's representatives.

Kimberly D. Bose,

Secretary.

[FR Doc. E9–21241 Filed 9–2–09; 8:45 am]

BILLING CODE 6717–01–P

DEPARTMENT OF ENERGY

Federal Energy Regulatory Commission

[Docket No. CP09–455–000; PF08–31–000; Docket No. CP09–456–000; PF08–32–000]

Florida Gas Transmission Company, LLC; Transcontinental Gas Pipe Line Company, LLC; Florida Gas Transmission Company, LLC; Notice of Application

August 27, 2009.

Take notice that on August 14, 2009, Florida Gas Transmission Company, LLC (FGT), 5455 Westheimer Road, Houston, Texas 77056–5306, filed an application to section 7(c) of the Natural Gas Act (NGA) seeking authority to construct, own, operate and maintain certain natural gas transmission facilities, including a metering and regulation station and associated and appurtenant facilities and the modification of a compressor facility all in Mobile County, Alabama; and to provide firm transportation services under Subpart G of Part 284 of the Commission's Regulations (The Mobile Bay Lateral Extension Project), all as more fully set forth in the application. This filing is available for review at the Commission in the Public Reference Room or may be viewed on the Commission's Web site at *http://www.fer.gov* using the ''eLibrary'' link. Enter the docket number excluding the last three digits in the docket number field to access the document. For assistance, please contact FERC Online Support at *FERCOnlineSupport@ferc.gov* or toll free at (866) 208–3676, or for TTY, contact (202) 502–8659.

Specifically, The Mobile Bay Lateral Extension Project will consist of 8.83 miles of 24-inch pipeline and related facilities. The project will provide an annual average of 342,610 MMbtu/day of additional firm transportation capacity. FGT estimates that the cost of the project will be $34 million. In addition, FGT is requesting to include in the overall cost of service, FGT's share of the Transco-FGT Pascagoula Expansion Project filed, concurrently, in Docket No. CP09–456–000.

Also, take notice that on August 14, 2009, Transcontinental Gas Pipe Line Company, LLC (Transco), Post Office Box 1396, Houston, Texas 77251, and FGT (collectively Applicants), filed an application to section 7(c) of the NGA seeking authority to jointly construct, and operate the Pascagoula Expansion Project, a greenfield natural gas pipeline connecting the Gulf LNG Pipeline with Applicants' existing Mobile Bay Lateral, and related facilities. The project will provide 810,000 dekatherms per day (Dth/day) of firm transportation service, with a target in-service date of September 30, 2011. Applicants estimate that the proposed project will cost approximately $59 million.

Specifically, the Pascagoula Expansion Project will consist of 15 miles of 26-inch pipeline and related facilities extending from the interconnection with Gulf LNG Pipeline to Applicants' existing Mobile Bay Lateral in Mobile County, Alabama.

Any questions regarding the Mobile Bay Lateral Extension Project should be directed to Stephen T. Veatch, Sr. Director, Certificates and Tariffs, Florida Gas Transmission Company, LLC, 5444

Westheimer Road, Houston, Texas 77056–5306 or at (713) 989–2024, or *Stephen.Veatch@sug.com.*

Any questions regarding the Pascagoula Expansion Project should be directed to Ingrid Germany, P.O. Box 1396, Houston, Texas 77251 or at (713) 215–4015, or *PipelineExpansion@williams.com.*

FGT and Applicants state that by letter dated September 24, 2008, in Docket Nos. PF08–31–000 and PF08–32–000, the Commission's Office of Energy Projects granted both FGT's September 11, 2008, and the Applicants' September 15, 2008, request to utilize the Commission's Pre-Filing Process for the proposed Mobile Bay Lateral Extension Project and Pascagoula Expansion Project. FGT and the Applicants have also submitted an applicant-prepared Draft Environmental Assessment that was prepared during the Pre-Filing Process that was included with this application.

On September 24 2008, the Commission staff granted FGT's request to utilize the National Environmental Policy Act (NEPA) Pre-Filing Process and assigned Docket No. PF08–31–000 to staff activities involving the project. Now, as of the filing of this application on August 14, 2009, the NEPA Pre-Filing Process for this project has ended. From this time forward, this proceeding will be conducted in Docket No. CP09–455–000, as noted in the caption of this notice.

On September 24 2008, the Commission staff granted the Applicants' request to utilize the National Environmental Policy Act (NEPA) Pre-Filing Process and assigned Docket No. PF08–32–000 to staff activities involving the project. Now, as of the filing of this application on August 14, 2009, the NEPA Pre-Filing Process for this project has ended. From this time forward, this proceeding will be conducted in Docket No. CP09–456–000, as noted in the caption of this notice.

Pursuant to section 157.9 of the Commission's rules, 18 CFR 157.9, within 90 days of this Notice the Commission staff will either: Complete its environmental assessment (EA) and place it into the Commission's public record (eLibrary) for this proceeding; or issue a Notice of Schedule for Environmental Review. If a Notice of Schedule for Environmental Review is issued, it will indicate, among other milestones, the anticipated date for the Commission staff's issuance of the final environmental impact statement (FEIS) or EA for this proposal. The filing of the EA in the Commission's public record for this proceeding or the issuance of a Notice of Schedule for Environmental Review will serve to notify federal and state agencies of the timing for the completion of all necessary reviews, and the subsequent need to complete all federal authorizations within 90 days of the date of issuance of the Commission staff's FEIS or EA.

There are two ways to become involved in the Commission's review of this project. First, any person wishing to obtain legal status by becoming a party to the proceedings for this project should, on or before the comment date stated below, file with the Federal Energy Regulatory Commission, 888 First Street, NE., Washington, DC 20426, a motion to intervene in accordance with the requirements of the Commission's Rules of Practice and Procedure (18 CFR 385.214 or 385.211) and the Regulations under the NGA (18 CFR 157.10). A person obtaining party status will be placed on the service list maintained by the Secretary of the Commission and will receive copies of all documents filed by the applicant and by all other parties. A party must submit 14 copies of filings made with the Commission and must mail a copy to the applicant and to every other party in the proceeding. Only parties to the proceeding can ask for court review of Commission orders in the proceeding.

However, a person does not have to intervene in order to have comments considered. The second way to participate is by filing with the Secretary of the Commission, as soon as possible, an original and two copies of comments in support of or in opposition to this project. The Commission will consider these comments in determining the appropriate action to be taken, but the filing of a comment alone will not serve to make the filer a party to the proceeding. The Commission's rules require that persons filing comments in opposition to the project provide copies of their protests only to the party or parties directly involved in the protest.

Persons who wish to comment only on the environmental review of this project should submit an original and two copies of their comments to the Secretary of the Commission. Environmental commentors will be placed on the Commission's environmental mailing list, will receive copies of the environmental documents, and will be notified of meetings associated with the Commission's environmental review process. Environmental commentors will not be required to serve copies of filed documents on all other parties. However, the non-party commentors will not receive copies of all documents filed by other parties or issued by the Commission (except for the mailing of environmental documents issued by the Commission) and will not have the right to seek court review of the Commission's final order.

The Commission strongly encourages electronic filings of comments, protests and interventions in lieu of paper using the ''eFiling'' link at *http://www.ferc.gov.* Persons unable to file electronically should submit an original and 14 copies of the protest or intervention to the Federal Energy Regulatory Commission, 888 First Street, NE., Washington, DC 20426.

This filing is accessible on-line at *http://www.ferc.gov,* using the ''eLibrary'' link and is available for review in the Commission's Public Reference Room in Washington, DC. There is an ''eSubscription'' link on the Web site that enables subscribers to receive e-mail notification when a document is added to a subscribed docket(s). For assistance with any FERC Online service, please e-mail *FERCOnlineSupport@ferc.gov,* or call (866) 208–3676 (toll free). For TTY, call (202) 502–8659.

Comment Date: September 17, 2009.

Kimberly D. Bose,

Secretary.

[FR Doc. E9–21247 Filed 9–2–09; 8:45 am]

BILLING CODE 6717–01–P

DEPARTMENT OF ENERGY

Federal Energy Regulatory Commission

[Project No. 12187–013]

Price Dam Partnership, Limited; Notice of Request for Extension of Time To Commence and Complete Project Construction and Soliciting Comments, Motions To Intervene, and Protests

August 27, 2009.

Take notice that the following hydroelectric application has been filed with the Commission and is available for public inspection:

a. *Application Type:* Request for Extension of Time.

b. *Project No:* 12187–013.

c. *Date Filed:* August 24, 2009.

d. *Applicant:* Price Dam Partnership, Limited.

e. *Name of Project:* Price Dam Hydroelectric Project.

f. *Location:* At the existing St. Louis District's U.S. Army Corps of Engineers' (Corps) Melvin Price Locks & Dam on the Mississippi River, in the city of Alton, Wood River Township, Madison

County, Illinois. The project would occupy about 1.81 acres of Federal lands.

g. *Pursuant to:* Public Law 111–60, 123 STAT. 1995.

h. *Applicant Contact:* John A. Whittaker, IV, Winston & Strawn, LLP, 1700 K Street, NW., Washington, DC 20006; (202) 282–5766 and e-mail: *jwhittak@winston.com.*

i. *FERC Contact:* Diane M. Murray, Telephone: (202) 502–8838 and e-mail: *diane.murray@ferc.gov.*

j. *Deadline for Filing Comments, Motions To Intervene, and Protests:* September 28, 2009. Please include the project number (P–12187–013) on any comments.

The Commission's Rules of Practice and Procedure require all intervenors filing documents with the Commission to serve a copy of that document on each person whose name appears on the official service list for the project. Further, if an intervenor files comments or documents with the Commission relating to the merits of an issue that may affect the responsibilities of a particular resource agency, they must also serve a copy of the document on that resource agency. A copy of any motion to intervene must also be served upon each representative of the Applicant specified in the particular application.

k. *Description of Request:* The licensee requests that the Commission grant a two-year extension of time from the existing deadline of July 28, 2009 to July 28, 2011 to commence project construction of the Price Dam Hydroelectric Project. This will be the first 2-year extension of three authorized by Public Law No. 111–60.

l. *Locations of the Application:* A copy of the application is available for inspection and reproduction at the Commission's Public Reference Room, located at 888 First Street, NE., Room 2A, Washington, DC 20426, or by calling (202) 502–8371. This filing may also be viewed on the Commission's Web site at *http://www.ferc.gov* using the ''eLibrary'' link. Enter the docket number excluding the last three digits in the docket number field to access the document. You may also register online at *http://www.ferc.gov/docs-filing/esubscription.asp* to be notified via e-mail of new filings and issuances related to this or other pending projects. For assistance, call toll-free 1–866–208–3676 or e-mail *FERCOnlineSupport@ferc.gov.* For TTY, call (202) 502–8659. A copy is also available for inspection and reproduction at the address in item h. above.

m. Individuals desiring to be included on the Commission's mailing list should so indicate by writing to the Secretary of the Commission.

n. Comments, Protests, or Motions to Intervene—Anyone may submit comments, a protest, or a motion to intervene in accordance with the requirements of Rules of Practice and Procedure, 18 CFR 385.210, .211, and .214. In determining the appropriate action to take, the Commission will consider all protests or other comments filed, but only those who file a motion to intervene in accordance with the Commission's Rules may become a party to the proceeding. Any comments, protests, or motions to intervene must be received on or before the specified comment date for the particular application.

o. Any filings must bear in all capital letters the title ''COMMENTS'', ''PROTEST'', or ''MOTION TO INTERVENE'', as applicable, and the Project Number of the particular application to which the filing refers.

p. Agency Comments—Federal, State, and local agencies are invited to file comments on the described application. A copy of the application may be obtained by agencies directly from the Applicant. If an agency does not file comments within the time specified for filing comments, it will be presumed to have no comments. One copy of an agency's comments must also be sent to the Applicant's representatives.

q. Comments, protests, and interventions may be filed electronically via the Internet. See, 18 CFR 385.2001(a)(1)(iii) and the instructions on the Commission's Web site at *http://www.ferc.gov* under the ''e-Filing'' link. If unable to be filed electronically, documents may be paper-filed. To paper-file, an original and eight copies should be mailed to: Kimberly D. Bose, Secretary, Federal Energy Regulatory Commission, 888 First Street, NE., Washington, DC 20426.

Kimberly D. Bose,

Secretary.

[FR Doc. E9–21244 Filed 9–2–09; 8:45 am]

BILLING CODE 6717–01–P

DEPARTMENT OF ENERGY

Federal Energy Regulatory Commission

[Docket No. CP09–458–000]

ANR Pipeline Company; Notice of Application

August 27, 2009.

Take notice that on August 24, 2009, ANR Pipeline Company (ANR), 717 Texas Street, Houston, Texas 77002, filed with the Commission an application under section 7(b) of the Natural Gas Act (NGA) for authorization to abandon by sale to W&T Offshore, Inc. (W&T) approximately 16.22 miles of 10-inch pipeline, 3.18 miles of 8-inch pipeline and various appurtenances and other facilities related to the 10-inch and 8-inch pipelines located in federal waters offshore Louisiana in the Gulf of Mexico. ANR also requests a determination that upon abandonment, W&T's ownership and operation of the subject facilities will be exempt from the Commission's jurisdiction under section 1(b) of the NGA, all as more fully set forth in the application which is on file with the Commission and open to public inspection. This filing is available for review at the Commission in the Public Reference Room or may be viewed on the Commission's Web site at *http://www.ferc.gov* using the ''eLibrary'' link. Enter the docket number excluding the last three digits in the docket number field to access the document. For assistance, contact FERC at *FERCOnlineSupport@ferc.gov* or call toll-free, (886) 208–3676 or TYY, (202) 502–8659.

Any questions regarding the petition should be directed to Rene Staeb, Manager, Project Determinations & Regulatory Administration, ANR Pipeline Company, 717 Texas Street, Houston, Texas 77002, at (832) 320–5215, or fax (832) 320–6215, or e-mail *Rene_Staeb@transcanada.com.*

There are two ways to become involved in the Commission's review of this project. First, any person wishing to obtain legal status by becoming a party to the proceedings for this project should, on or before the comment date stated below file with the Federal Energy Regulatory Commission, 888 First Street, NE., Washington, DC 20426, a motion to intervene in accordance with the requirements of the Commission's Rules of Practice and Procedure (18 CFR 385.214 or 385.211) and the Regulations under the NGA (18 CFR 157.10). A person obtaining party status will be placed on the service list maintained by the Secretary of the Commission and will receive copies of

all documents filed by the applicant and by all other parties. A party must submit 14 copies of filings made in the proceeding with the Commission and must mail a copy to the applicant and to every other party. Only parties to the proceeding can ask for court review of Commission orders in the proceeding.

However, a person does not have to intervene in order to have comments considered. The second way to participate is by filing with the Secretary of the Commission, as soon as possible, an original and two copies of comments in support of or in opposition to this project. The Commission will consider these comments in determining the appropriate action to be taken, but the filing of a comment alone will not serve to make the filer a party to the proceeding. The Commission's rules require that persons filing comments in opposition to the project provide copies of their protests only to the party or parties directly involved in the protest.

Persons who wish to comment only on the environmental review of this project should submit an original and two copies of their comments to the Secretary of the Commission. Environmental commentors will be placed on the Commission's environmental mailing list, will receive copies of the environmental documents, and will be notified of meetings associated with the Commission's environmental review process. Environmental commentors will not be required to serve copies of filed documents on all other parties. However, the non-party commentors will not receive copies of all documents filed by other parties or issued by the Commission (except for the mailing of environmental documents issued by the Commission) and will not have the right to seek court review of the Commission's final order.

The Commission strongly encourages electronic filings of comments, protests and interventions in lieu of paper using the ''eFiling'' link at *http://www.ferc.gov.* Persons unable to file electronically should submit an original and 14 copies of the protest or intervention to the Federal Energy regulatory Commission, 888 First Street, NE., Washington, DC 20426.

This filing is accessible online at *http://www.ferc.gov*, using the ''eLibrary'' link and is available for review in the Commission's Public Reference Room in Washington, DC. There is an ''eSubscription'' link on the Web site that enables subscribers to receive e-mail notification when a document is added to a subscribed docket(s). For assistance with any FERC Online service, please e-mail *FERCOnlineSupport@ferc.gov*, or call (866) 208–3676 (toll free). For TTY, call (202) 502–8659.

Comment Date: 5 p.m. Eastern Time on September 17, 2009.

Kimberly D. Bose,

Secretary.

[FR Doc. E9–21240 Filed 9–2–09; 8:45 am]

BILLING CODE 6717–01–P

DEPARTMENT OF ENERGY

Federal Energy Regulatory Commission

Combined Notice of Filings #1

August 27, 2009.

Take notice that the Commission received the following electric rate filings:

Docket Numbers: ER00–115–010; ER00–3562–011; ER06–755–005; ER03–342–007; ER02–2227–009; ER02–600–010; ER99–1983–008; ER01–2688–012; ER01–2887–009; ER02–2229–008; ER03–24–008; ER03–838–008; ER05–67–005; ER05–68–005; ER06–756–005; ER09–71–002;

Applicants: Calpine Energy Services, L.P., South Point Energy Center, LLC, Delta Energy Center, LLC, Calpine Construction Finance Company, LP, Otay Mesa Energy Center, LLC, Pastoria Energy Center, LLC, Metcalf Energy Center, LLC, Los Medanos Energy Center LLC, Goose Haven Energy Center, LLC, Gilroy Energy Center, LLC, Creed Energy Center, LLC, Calpine Gilroy Cogen, L.P., Power Contract Financing, L.L.C., LOS ESTEROS CRITICAL ENERGY CENTER, LLC, Geysers Power Company, Calpine PowerAmerica L.P.

Description: Notification of Change in Status of Calpine Construction Finance Company, L.P., *et al.*

Filed Date: 08/24/2009

Accession Number: 20090824–5136.

Comment Date: 5 p.m. Eastern Time on Monday, September 14, 2009.

Docket Numbers: ER09–1367–001.

Applicants: MidAmerican Energy Company.

Description: MidAmerican Energy Co. submits a substitute to the 6/29/09 Facilities Agreement with ITC Midwest, LLC.

Filed Date: 08/27/2009.

Accession Number: 20090827–0052.

Comment Date: 5 p.m. Eastern Time on Thursday, September 17, 2009.

Docket Numbers: ER09–1535–001.

Applicants: Berkshire Power Company, LLC.

Description: Berkshire Power Company, LLC submits Original Sheet 1 *et al.* to First Revised Rate Schedule FERC No 2.

Filed Date: 08/25/2009.

Accession Number: 20090826–0055.

Comment Date: 5 p.m. Eastern Time on Friday, September 4, 2009.

Docket Numbers: ER09–1548–001.

Applicants: Midwest Independent Transmission System Operator, Inc.

Description: Midwest Independent Transmission System Operator, Inc. submits Notice of Succession of Certain Transmission Service Agreements and Network Integration Transmission Service and Operating Agreements.

Filed Date: 08/24/2009.

Accession Number: 20090825–0056.

Comment Date: 5 p.m. Eastern Time on Monday, September 14, 2009.

Docket Numbers: ER09–1549–000.

Applicants: First Wind Energy Marketing, LLC.

Description: Application of First Wind Energy Marketing, LLC for order accepting initial market-based rate tariff, waiving regulations, and granting blanket approvals.

Filed Date: 08/26/2009.

Accession Number: 20090827–0094.

Comment Date: 5 p.m. Eastern Time on Wednesday, September 16, 2009.

Docket Numbers: ER09–1605–000.

Applicants: Silver Sage Windpower, LLC.

Description: Application of Silver Sage Windpower, LLC for market-based rate authority.

Filed Date: 08/25/2009.

Accession Number: 20090826–0064.

Comment Date: 5 p.m. Eastern Time on Tuesday, September 15, 2009.

Docket Numbers: ER09–1622–000.

Applicants: Pacific Gas and Electric Company.

Description: Pacific Gas and Electric Company submit amendment to extend agreements for whole distribution service and interconnection executed between PG&E and Shelter Cove Resort Improvement District No. 1.

Filed Date: 08/25/2009.

Accession Number: 20090825–0087.

Comment Date: 5 p.m. Eastern Time on Tuesday, September 15, 2009.

Docket Numbers: ER09–1623–000.

Applicants: Carolina Power & Light Company.

Description: Carolina Power & Light Co submits a Power Supply and Coordination Agreement.

Filed Date: 08/25/2009.

Accession Number: 20090825–0094.

Comment Date: 5 p.m. Eastern Time on Tuesday, September 15, 2009.

Docket Numbers: ER09–1624–000.

Applicants: Black Creek Hydro, Inc.

Description: Black Creek Hydro, Inc. submits an Agreement for Power Sale,

dated 7/1/09 entered into by and between Black Creek Hydro and Avista Corporation.

Filed Date: 08/25/2009.

Accession Number: 20090825–0093.

Comment Date: 5 p.m. Eastern Time on Tuesday, September 15, 2009.

Docket Numbers: ER09–1625–000.

Applicants: Virginia Electric and Power Company.

Description: Virginia Electric and Power Company submits revised cover sheet to cancel a Standard Large Generator Interconnection Agreement with Dominion Virginia Power, effective 8/18/09.

Filed Date: 08/25/2009.

Accession Number: 20090825–0092.

Comment Date: 5 p.m. Eastern Time on Tuesday, September 15, 2009.

Docket Numbers: ER09–1626–000.

Applicants: PacifiCorp.

Description: PacifiCorp submits a Notice of Cancellation for Service Agreement No. 345.

Filed Date: 08/25/2009.

Accession Number: 20090826–0054.

Comment Date: 5 p.m. Eastern Time on Tuesday, September 15, 2009.

Docket Numbers: ER09–1627–000.

Applicants: Black Hills Wyoming, LLC.

Description: Black Hills Wyoming, LLC submits Electric Rate Schedule FERC No. 3.

Filed Date: 08/25/2009.

Accession Number: 20090826–0053.

Comment Date: 5 p.m. Eastern Time on Tuesday, September 15, 2009.

Docket Numbers: ER09–1628–000.

Applicants: PacifiCorp.

Description: PacifiCorp submits a Large Generator Interconnection Agreement Facilities Maintenance Agreement.

Filed Date: 08/25/2009.

Accession Number: 20090826–0052.

Comment Date: 5 p.m. Eastern Time on Tuesday, September 15, 2009.

Docket Numbers: ER09–1629–000.

Applicants: PacifiCorp.

Description: PacfiCorp submits a Large Generator Interconnection Agreement.

Filed Date: 08/25/2009.

Accession Number: 20090826–0051.

Comment Date: 5 p.m. Eastern Time on Tuesday, September 15, 2009.

Docket Numbers: ER09–1630–000.

Applicants: California Independent System Operator Corporation.

Description: The California Independent System Operator Corp submits a revised Adjacent Balancing Authority Operating Agreement and a letter agreement with BPA Power Services etc.

Filed Date: 08/25/2009.

Accession Number: 20090826–0065.

Comment Date: 5 p.m. Eastern Time on Tuesday, September 15, 2009.

Docket Numbers: ER09–1631–000.

Applicants: PJM Interconnection L.L.C.

Description: PJM Interconnection, LLC submits an executed Wholesale Market Participation, Agreement entered into among PJM, *et al.* executed on 7/31/09.

Filed Date: 08/26/2009.

Accession Number: 20090826–0062.

Comment Date: 5 p.m. Eastern Time on Wednesday, September 16, 2009.

Docket Numbers: ER09–1632–000.

Applicants: PJM Interconnection, L.L.C.

Description: PJM Interconnection, LLC submits an executed Wholesale Market Participation Agreement entered into among PJM, *et al.* executed on 7/28/09.

Filed Date: 08/26/2009.

Accession Number: 20090826–0061.

Comment Date: 5 p.m. Eastern Time on Wednesday, September 16, 2009.

Docket Numbers: ER09–1633–000.

Applicants: PacifiCorp.

Description: PacifiCorp submits transmission system interconnection agreement between Bonneville Power Administration and PacifiCorp.

Filed Date: 08/26/2009.

Accession Number: 20090827–0051.

Comment Date: 5 p.m. Eastern Time on Wednesday, September 16, 2009.

Docket Numbers: ER09–1634–000.

Applicants: Midwest Independent Transmission System Operator, Inc.

Description: Midwest Independent Transmission System Operator, Inc submits adjacent balancing authority coordination agreement with the Omaha Public Power District.

Filed Date: 08/26/2009.

Accession Number: 20090827–0053.

Comment Date: 5 p.m. Eastern Time on Wednesday, September 16, 2009.

Docket Numbers: ER09–1635–000.

Applicants: Allegheny Power & Trans-Allegheny Inters.

Description: Allegheny Power *et al.* submits an Interconnection Agreement with TrAILCO dated as of 8/26/09 designated as Original Service Agreement 2149 under FERC Electric Tariff, Sixth Revised Volume 1, effective 10/26/09.

Filed Date: 08/26/2009.

Accession Number: 20090827–0056.

Comment Date: 5 p.m. Eastern Time on Wednesday, September 16, 2009.

Docket Numbers: ER09–1636–000.

Applicants: Midwest Independent Transmission System Operator, Inc.

Description: Midwest Independent Transmission System Operator, Inc *et al.* submits proposed revisions to Attachment O of their Open Access Transmission, Energy and Operating Reserve Markets Tariffs, to be effective 9/1/09.

Filed Date: 08/26/2009.

Accession Number: 20090827–0057.

Comment Date: 5 p.m. Eastern Time on Wednesday, September 16, 2009.

Docket Numbers: ER09–1637–000.

Applicants: Midwest Independent Transmission System Operator, Inc.

Description: Midwest Independent Transmission System Operator, Inc *et al.* submits revisions to Attachment O of their Open Access Transmission, Energy and Operating Reserve Markets Tariff.

Filed Date: 08/26/2009.

Accession Number: 20090827–0054.

Comment Date: 5 p.m. Eastern Time on Wednesday, September 16, 2009.

Docket Numbers: ER09–1638–000.

Applicants: PJM Interconnection, L.L.C.

Description: PJM Interconnection, LLC submits an executed interim Interconnection Service Agreement with FPL Energy Illinois Wind, LLC *et al.*

Filed Date: 08/26/2009.

Accession Number: 20090827–0055.

Comment Date: 5 p.m. Eastern Time on Wednesday, September 16, 2009.

Docket Numbers: ER09–1639–000.

Applicants: PJM Interconnection, L.L.C.

Description: PJM Interconnection, LLC submits Original Service Agreement 2275 to FERC Gas Tariff, Sixth Revised Volume 1 under ER09–1639.

Filed Date: 08/27/2009.

Accession Number: 20090827–0090.

Comment Date: 5 p.m. Eastern Time on Thursday, September 17, 2009.

Take notice that the Commission received the following electric securities filings:

Docket Numbers: ES09–48–000.

Applicants: El Paso Electric Company.

Description: Application of El Paso Electric Company for Authorization under Section 204 of the Federal Power Act regarding a Revolving Credit Facility.

Filed Date: 08/25/2009.

Accession Number: 20090825–5040.

Comment Date: 5 p.m. Eastern Time on Tuesday, September 15, 2009.

Take notice that the Commission received the following electric reliability filings:

Docket Numbers: RR09–9–000; RR07–14–004; RR08–6–004.

Applicants: North American Electric Reliability Corp.

Description: Request of the North American Electric Reliability Corporation for Acceptance of its 2010 Business Plan and Budget and the 2010 Business Plans and Budgets.

Filed Date: 08/24/2009.

Accession Number: 20090824–5073.

Comment Date: 5 p.m. Eastern Time on Monday, September 14, 2009.

Any person desiring to intervene or to protest in any of the above proceedings must file in accordance with Rules 211 and 214 of the Commission's Rules of Practice and Procedure (18 CFR 385.211 and 385.214) on or before 5 p.m. Eastern time on the specified comment date. It is not necessary to separately intervene again in a subdocket related to a compliance filing if you have previously intervened in the same docket. Protests will be considered by the Commission in determining the appropriate action to be taken, but will not serve to make protestants parties to the proceeding. Anyone filing a motion to intervene or protest must serve a copy of that document on the Applicant. In reference to filings initiating a new proceeding, interventions or protests submitted on or before the comment deadline need not be served on persons other than the Applicant.

The Commission encourages electronic submission of protests and interventions in lieu of paper, using the FERC Online links at *http://www.ferc.gov.* To facilitate electronic service, persons with Internet access who will eFile a document and/or be listed as a contact for an intervenor must create and validate an eRegistration account using the eRegistration link. Select the eFiling link to log on and submit the intervention or protests.

Persons unable to file electronically should submit an original and 14 copies of the intervention or protest to the Federal Energy Regulatory Commission, 888 First St., NE., Washington, DC 20426.

The filings in the above proceedings are accessible in the Commission's eLibrary system by clicking on the appropriate link in the above list. They are also available for review in the Commission's Public Reference Room in Washington, DC. There is an eSubscription link on the Web site that enables subscribers to receive e-mail notification when a document is added to a subscribed docket(s). For assistance with any FERC Online service, please e-mail *FERCOnlineSupport@ferc.gov.* or call (866) 208–3676 (toll free). For TTY, call (202) 502–8659.

Kimberly D. Bose,

Secretary.

[FR Doc. E9–21237 Filed 9–2–09; 8:45 am]

BILLING CODE 6717–01–P

DEPARTMENT OF ENERGY

Federal Energy Regulatory Commission

Combined Notice of Filings No. 1

August 26, 2009.

Take notice that the Commission has received the following Natural Gas Pipeline Rate and Refund Report filings:

Docket Numbers: RP09–920–000.

Applicants: Southern Star Central Gas Pipeline, Inc.

Description: Southern Star Central Gas Pipeline, Inc submits Twelfth Revised Sheet 11 *et al.* to FERC Gas Tariff, Original Volume 1 to be effective 10/1/09.

Filed Date: 08/24/2009.

Accession Number: 20090824–0118.

Comment Date: 5 p.m. Eastern Time on Tuesday, September 8, 2009.

Docket Numbers: RP09–921–000.

Applicants: CenterPoint Energy-Mississippi River Tra.

Description: CenterPoint Energy-Mississippi River Transmission Corporation submits Sixty-Fifth Revised Sheet 5 *et al.* to FERC Gas Tariff, Third Revised Volume 1 to be effective 10/1/09.

Filed Date: 08/24/2009.

Accession Number: 20090824–0119.

Comment Date: 5 p.m. Eastern Time on Tuesday, September 8, 2009.

Docket Numbers: RP09–922–000.

Applicants: Florida Gas Transmission Company, LLC.

Description: Florida Gas Transmission Company, LLC submits Second Revised Sheet 30 *et al.* to FERC Gas Tariff, Fourth Revised Volume 1 to be effective 10/1/09.

Filed Date: 08/24/2009.

Accession Number: 20090824–0120.

Comment Date: 5 p.m. Eastern Time on Tuesday, September 8, 2009.

Docket Numbers: RP09–924–000.

Applicants: El Paso Natural Gas Company.

Description: El Paso Natural Gas Company submits Fourth Revised Sheet 137 *et al.* to its FERC Gas Tariff, Second Revised Volume 1A to be effective 9/24/09.

Filed Date: 08/24/2009.

Accession Number: 20090825–0017.

Comment Date: 5 p.m. Eastern Time on Tuesday, September 8, 2009.

Any person desiring to intervene or to protest in any of the above proceedings must file in accordance with Rules 211 and 214 of the Commission's Rules of Practice and Procedure (18 CFR 385.211 and 385.214) on or before 5 p.m. Eastern time on the specified comment date. It is not necessary to separately intervene again in a subdocket related to a compliance filing if you have previously intervened in the same docket. Protests will be considered by the Commission in determining the appropriate action to be taken, but will not serve to make protestants parties to the proceeding. Anyone filing a motion to intervene or protest must serve a copy of that document on the Applicant. In reference to filings initiating a new proceeding, interventions or protests submitted on or before the comment deadline need not be served on persons other than the Applicant.

The Commission encourages electronic submission of protests and interventions in lieu of paper, using the FERC Online links at *http://www.ferc.gov.* To facilitate electronic service, persons with Internet access who will eFile a document and/or be listed as a contact for an intervenor must create and validate an eRegistration account using the eRegistration link. Select the eFiling link to log on and submit the intervention or protests.

Persons unable to file electronically should submit an original and 14 copies of the intervention or protest to the Federal Energy Regulatory Commission, 888 First St., NE., Washington, DC 20426.

The filings in the above proceedings are accessible in the Commission's eLibrary system by clicking on the appropriate link in the above list. They are also available for review in the Commission's Public Reference Room in Washington, DC. There is an eSubscription link on the Web site that enables subscribers to receive email notification when a document is added to a subscribed docket(s). For assistance with any FERC Online service, please e-mail *FERCOnlineSupport@ferc.gov.* or call (866) 208–3676 (toll free). For TTY, call (202) 502–8659.

Nathaniel J. Davis, Sr.,

Deputy Secretary.

[FR Doc. E9–21250 Filed 9–2–09; 8:45 am]

BILLING CODE 6717–01–P

DEPARTMENT OF ENERGY

Federal Energy Regulatory Commission

Combined Notice of Filings No. 1

August 27, 2009.

Take notice that the Commission has received the following Natural Gas Pipeline Rate and Refund Report filings:

Docket Numbers: RP09–925–000.
Applicants: Kern River Gas Transmission Company.
Description: Kern River Gas Transmission Company submits Second Revised Twentieth Revised Sheet 5 *et al.* FERC Gas Tariff, Second Revised Volume 1 effective 10/1/09.
Filed Date: 08/25/2009.
Accession Number: 20090825–0088.
Comment Date: 5 p.m. Eastern Time on Tuesday, September 8, 2009.

Docket Numbers: RP09–926–000.
Applicants: Tuscarora Gas Transmission Company.
Description: Tuscarora Gas Transmission Company submits First Revised Sheet 52 *et al.* to FERC Gas Tariff, First Revised Volume 1 effective 7/1/09.
Filed Date: 08/25/2009.
Accession Number: 20090825–0089.
Comment Date: 5 p.m. Eastern Time on Tuesday, September 8, 2009.

Any person desiring to intervene or to protest in any of the above proceedings must file in accordance with Rules 211 and 214 of the Commission's Rules of Practice and Procedure (18 CFR 385.211 and 385.214) on or before 5 p.m. Eastern time on the specified comment date. It is not necessary to separately intervene again in a subdocket related to a compliance filing if you have previously intervened in the same docket. Protests will be considered by the Commission in determining the appropriate action to be taken, but will not serve to make protestants parties to the proceeding. Anyone filing a motion to intervene or protest must serve a copy of that document on the Applicant. In reference to filings initiating a new proceeding, interventions or protests submitted on or before the comment deadline need not be served on persons other than the Applicant.

The Commission encourages electronic submission of protests and interventions in lieu of paper, using the FERC Online links at *http://www.ferc.gov.* To facilitate electronic service, persons with Internet access who will eFile a document and/or be listed as a contact for an intervenor must create and validate an eRegistration account using the eRegistration link. Select the eFiling link to log on and submit the intervention or protests.

Persons unable to file electronically should submit an original and 14 copies of the intervention or protest to the Federal Energy Regulatory Commission, 888 First St., NE., Washington, DC 20426.

The filings in the above proceedings are accessible in the Commission's eLibrary system by clicking on the appropriate link in the above list. They are also available for review in the Commission's Public Reference Room in Washington, DC. There is an eSubscription link on the Web site that enables subscribers to receive e-mail notification when a document is added to a subscribed docket(s). For assistance with any FERC Online service, please e-mail *FERCOnlineSupport@ferc.gov* or call (866) 208–3676 (toll free). For TTY, call (202) 502–8659.

Nathaniel J. Davis, Sr.,
Deputy Secretary.
[FR Doc. E9–21252 Filed 9–2–09; 8:45 am]
BILLING CODE 6717–01–P

DEPARTMENT OF ENERGY

Federal Energy Regulatory Commission

Combined Notice of Filings No. 2

August 24, 2009.

Take notice that the Commission has received the following Natural Gas Pipeline Rate and Refund Report filings:

Docket Numbers: RP96–320–112.
Applicants: Gulf South Pipeline Company, LP.
Description: Gulf South Pipeline Company, LP submits Capacity Release Agreement containing negotiated rate provisions.
Filed Date: 07/31/2009.
Accession Number: 20090803–0054.
Comment Date: 5 p.m. Eastern Time on Thursday, August 27, 2009.

Docket Numbers: RP00–70–021.
Applicants: Algonquin Gas Transmission Company.
Description: Algonquin Gas Transmission, LLC submits Second Revised Sheet No. 90 to FERC Gas Tariff, Fifth Revised Volume No. 1 under RP00–70.
Filed Date: 08/11/2009.
Accession Number: 20090812–0055.
Comment Date: 5 p.m. Eastern Time on Thursday, August 27, 2009.

Docket Numbers: RP09–863–003.
Applicants: Columbia Gas Transmission, LLC.
Description: Columbia Gas Transmission, LLC submits FTS Service Agreement 10255 with Reed Brothers Limited Partnership dated 8/1/09, to be effective 9/1/09.
Filed Date: 08/21/2009.
Accession Number: 20090824–0025.
Comment Date: 5 p.m. Eastern Time on Wednesday, September 02, 2009.

Any person desiring to protest this filing must file in accordance with Rule 211 of the Commission's Rules of Practice and Procedure (18 CFR 385.211). Protests to this filing will be considered by the Commission in determining the appropriate action to be taken, but will not serve to make protestants parties to the proceeding. Such protests must be filed on or before 5 p.m. Eastern time on the specified comment date. Anyone filing a protest must serve a copy of that document on all the parties to the proceeding.

The Commission encourages electronic submission of protests in lieu of paper using the ''eFiling'' link at *http://www.ferc.gov.* Persons unable to file electronically should submit an original and 14 copies of the protest to the Federal Energy Regulatory Commission, 888 First Street, NE., Washington, DC 20426.

This filing is accessible on-line at *http://www.ferc.gov,* using the ''eLibrary'' link and is available for review in the Commission's Public Reference Room in Washington, DC. There is an ''eSubscription'' link on the Web site that enables subscribers to receive e-mail notification when a document is added to a subscribed docket(s). For assistance with any FERC Online service, please e-mail *FERCOnlineSupport@ferc.gov,* or call (866) 208–3676 (toll free). For TTY, call (202) 502–8659.

Nathaniel J. Davis, Sr.,
Deputy Secretary.
[FR Doc. E9–21255 Filed 9–2–09; 8:45 am]
BILLING CODE 6717–01–P

DEPARTMENT OF ENERGY

Federal Energy Regulatory Commission

Combined Notice of Filings No. 3

August 27, 2009.

Take notice that the Commission has received the following Natural Gas Pipeline Rate and Refund Report filings:

Docket Numbers: RP06–200–060.
Applicants: Rockies Express Pipeline LLC.
Description: Rockies Express Pipeline LLC submits Sixth Revised Sheet No 8D *et al.* to its FERC Gas Tariff, Second Revised Volume No. 1.

Filed Date: 08/25/2009.

Accession Number: 20090825–0091.

Comment Date: 5 p.m. Eastern Time on Tuesday, September 8, 2009.

Docket Numbers: RP07–113–002.

Applicants: Enbridge Pipelines (Midla) LLC.

Description: Enbridge Pipelines, LLC submits First Revised Sheet 125 *et al.* to FERC Gas Tariff, Fifth Revised Volume 1 to be effective 10/1/09 under RPO7–113.

Filed Date: 08/26/2009.

Accession Number: 20090826–0067.

Comment Date: 5 p.m. Eastern Time on Tuesday, September 8, 2009.

Any person desiring to intervene or to protest in any of the above proceedings must file in accordance with Rules 211 and 214 of the Commission's Rules of Practice and Procedure (18 CFR 385.211 and 385.214) on or before 5 p.m. Eastern time on the specified comment date. It is not necessary to separately intervene again in a subdocket related to a compliance filing if you have previously intervened in the same docket. Protests will be considered by the Commission in determining the appropriate action to be taken, but will not serve to make protestants parties to the proceeding. Anyone filing a motion to intervene or protest must serve a copy of that document on the Applicant. In reference to filings initiating a new proceeding, interventions or protests submitted on or before the comment deadline need not be served on persons other than the Applicant.

The Commission encourages electronic submission of protests and interventions in lieu of paper, using the FERC Online links at *http://www.ferc.gov.* To facilitate electronic service, persons with Internet access who will eFile a document and/or be listed as a contact for an intervenor must create and validate an eRegistration account using the eRegistration link. Select the eFiling link to log on and submit the intervention or protests.

Persons unable to file electronically should submit an original and 14 copies of the intervention or protest to the Federal Energy Regulatory Commission, 888 First St., NE., Washington, DC 20426.

The filings in the above proceedings are accessible in the Commission's eLibrary system by clicking on the appropriate link in the above list. They are also available for review in the Commission's Public Reference Room in Washington, DC. There is an eSubscription link on the Web site that enables subscribers to receive e-mail notification when a document is added to a subscribed docket(s). For assistance with any FERC Online service, please e-mail *FERCOnlineSupport@ferc.gov* or call (866) 208–3676 (toll free). For TTY, call (202) 502–8659.

Nathaniel J. Davis, Sr.,

Deputy Secretary.

[FR Doc. E9–21254 Filed 8–28–09; 8:45 am]

BILLING CODE 6717–01–P

DEPARTMENT OF ENERGY

Federal Energy Regulatory Commission

Combined Notice of Filings No. 2

August 27, 2009.

Take notice that the Commission has received the following Natural Gas Pipeline Rate and Refund Report filings:

Docket Numbers: RP09–927–000.

Applicants: Southwest Gas Transmission Company, LP.

Description: Southwest Gas Transmission Company submits Eight Revised Sheet 4 to its FERC Gas Tariff, First Revised Volume 2 to be effective 10/1/09.

Filed Date: 08/26/2009.

Accession Number: 20090826–0058.

Comment Date: 5 p.m. Eastern Time on Tuesday, September 8, 2009.

Docket Numbers: RP09–928–000.

Applicants: Vector Pipeline L.P.

Description: Vector Pipeline, LP submits Tenth Revised Sheet 20 *et al.* to FERC Gas Tariff, Original Volume 1 to reflect the Annual Charge Adjustment charge, effective 10/1/09.

Filed Date: 08/26/2009.

Accession Number: 20090826–0057.

Comment Date: 5 p.m. Eastern Time on Tuesday, September 8, 2009.

Docket Numbers: RP09–929–000.

Applicants: Guardian Pipeline, LLC.

Description: Guardian Pipeline, LLC submits Second Revised Sheet 71 *et al.* to FERC Gas Tariff, Original Volume 1 superseding non-conforming service agreements, to be effective 10/1/09.

Filed Date: 08/26/2009.

Accession Number: 20090826–0056.

Comment Date: 5 p.m. Eastern Time on Tuesday, September 08, 2009.

Docket Numbers: RP09–930–000.

Applicants: Northern Natural Gas Company.

Description: Northern Natural Gas Company submits 14th Revised Sheet 135D *et al.* of its FERC Gas Tariff, Fifth Revised Volume 1 effective.

Filed Date: 08/26/2009.

Accession Number: 20090826–0050.

Comment Date: 5 p.m. Eastern Time on Tuesday, September 8, 2009.

Docket Numbers: RP09–931–000.

Applicants: Northern Border Pipeline Company.

Description: Northern Border Pipeline Company submits Fourteenth Revised Sheet 1 *et al.* of its FERC Gas Tariff, First Revised Volume 1 effective 9/25/09.

Filed Date: 08/26/2009.

Accession Number: 20090826–0076.

Comment Date: 5 p.m. Eastern Time on Tuesday, September 8, 2009.

Any person desiring to intervene or to protest in any of the above proceedings must file in accordance with Rules 211 and 214 of the Commission's Rules of Practice and Procedure (18 CFR 385.211 and 385.214) on or before 5 p.m. Eastern time on the specified comment date. It is not necessary to separately intervene again in a subdocket related to a compliance filing if you have previously intervened in the same docket. Protests will be considered by the Commission in determining the appropriate action to be taken, but will not serve to make protestants parties to the proceeding. Anyone filing a motion to intervene or protest must serve a copy of that document on the Applicant. In reference to filings initiating a new proceeding, interventions or protests submitted on or before the comment deadline need not be served on persons other than the Applicant.

The Commission encourages electronic submission of protests and interventions in lieu of paper, using the FERC Online links at *http://www.ferc.gov.* To facilitate electronic service, persons with Internet access who will eFile a document and/or be listed as a contact for an intervenor must create and validate an eRegistration account using the eRegistration link. Select the eFiling link to log on and submit the intervention or protests.

Persons unable to file electronically should submit an original and 14 copies of the intervention or protest to the Federal Energy Regulatory Commission, 888 First St., NE., Washington, DC 20426.

The filings in the above proceedings are accessible in the Commission's eLibrary system by clicking on the appropriate link in the above list. They are also available for review in the Commission's Public Reference Room in Washington, DC. There is an eSubscription link on the Web site that enables subscribers to receive e-mail notification when a document is added to a subscribed docket(s). For assistance with any FERC Online service, please e-mail *FERCOnlineSupport@ferc.gov.* or

call (866) 208–3676 (toll free). For TTY, call (202) 502–8659.

Nathaniel J. Davis, Sr.,

Deputy Secretary.

[FR Doc. E9–21253 Filed 9–2–09; 8:45 am]

BILLING CODE 6717–01–P

DEPARTMENT OF ENERGY

Federal Energy Regulatory Commission

Combined Notice of Filings No. 2

August 26, 2009.

Take notice that the Commission has received the following Natural Gas Pipeline Rate and Refund Report filings:

Docket Numbers: RP06–200–059.

Applicants: Rockies Express Pipeline LLC.

Description: Rockies Express Pipeline submits Ninth Revised Sheet 9 to its FERC Gas Tariff, Second Revised Volume 1.

Filed Date: 08/24/2009.

Accession Number: 20090825–0015.

Comment Date: 5 p.m. Eastern Time on Tuesday, September 8, 2009.

Docket Numbers: RP09–260–004.

Applicants: Tres Palacios Gas Storage LLC.

Description: Tres Palacious Gas Storage, LLC submits First Revised Sheet 21 *et al.* to its FERC Gas Tariff, Original Volume 1.

Filed Date: 08/24/2009.

Accession Number: 20090825–0016.

Comment Date: 5 p.m. Eastern Time on Tuesday, September 8, 2009.

Docket Numbers: RP09–61–009.

Applicants: Gulf Crossing Pipeline Company LLC.

Description: Gulf Crossing Pipeline Company, LLC submits amendment to negotiated rate letter agreement.

Filed Date: 08/24/2009.

Accession Number: 20090825–0079.

Comment Date: 5 p.m. Eastern Time on Tuesday, September 8, 2009.

Docket Numbers: RP96–320–114.

Applicants: Gulf South Pipeline Company, LP.

Description: Gulf South Pipeline Company, LP submits amendment to negotiated rate letter agreement.

Filed Date: 08/24/2009.

Accession Number: 20090825–0078.

Comment Date: 5 p.m. Eastern Time on Tuesday, September 8, 2009.

Any person desiring to intervene or to protest in any of the above proceedings must file in accordance with Rules 211 and 214 of the Commission's Rules of Practice and Procedure (18 CFR 385.211 and 385.214) on or before 5 p.m. Eastern time on the specified comment date. It is not necessary to separately intervene again in a subdocket related to a compliance filing if you have previously intervened in the same docket. Protests will be considered by the Commission in determining the appropriate action to be taken, but will not serve to make protestants parties to the proceeding. Anyone filing a motion to intervene or protest must serve a copy of that document on the Applicant. In reference to filings initiating a new proceeding, interventions or protests submitted on or before the comment deadline need not be served on persons other than the Applicant.

The Commission encourages electronic submission of protests and interventions in lieu of paper, using the FERC Online links at *http://www.ferc.gov.* To facilitate electronic service, persons with Internet access who will eFile a document and/or be listed as a contact for an intervenor must create and validate an eRegistration account using the eRegistration link. Select the eFiling link to log on and submit the intervention or protests.

Persons unable to file electronically should submit an original and 14 copies of the intervention or protest to the Federal Energy Regulatory Commission, 888 First St., NE., Washington, DC 20426.

The filings in the above proceedings are accessible in the Commission's eLibrary system by clicking on the appropriate link in the above list. They are also available for review in the Commission's Public Reference Room in Washington, DC. There is an eSubscription link on the Web site that enables subscribers to receive e-mail notification when a document is added to a subscribed docket(s). For assistance with any FERC Online service, please e-mail *FERCOnlineSupport@ferc.gov* or call (866) 208–3676 (toll free). For TTY, call (202) 502–8659.

Nathaniel J. Davis, Sr.,

Deputy Secretary.

[FR Doc. E9–21251 Filed 9–2–09; 8:45 am]

BILLING CODE 6717–01–P

DEPARTMENT OF ENERGY

Federal Energy Regulatory Commission

Combined Notice of Filings No.1

August 24, 2009.

Take notice that the Commission has received the following Natural Gas Pipeline Rate and Refund Report filings:

Docket Numbers: RP09–914–000.

Applicants: Eastern Shore Natural Gas Company.

Description: Eastern Shore Natural Gas Co submits Twenty-Fifth Revised Sheet 4 *et al.* to its FERC Gas Tariff, Second Revised Volume 1, effective 10/1/09.

Filed Date: 08/21/2009.

Accession Number: 20090821–0188.

Comment Date: 5 p.m. Eastern Time on Wednesday, September 2, 2009.

Docket Numbers: RP09–915–000.

Applicants: Northern Border Pipeline Company.

Description: Northern Border Pipeline Co submits Fourteenth Revised Sheet 99 to its FERC Gas Tariff, First revised Volume 1.

Filed Date: 08/21/2009.

Accession Number: 20090821–0187.

Comment Date: 5 p.m. Eastern Time on Wednesday, September 2, 2009.

Docket Numbers: RP09–916–000.

Applicants: Gulf South Pipeline Company, LP.

Description: Gulf South Pipeline Company, LP submits First Revised Sheet 4030 and 4031 to FERC Gas Tariff, Sixth Revised Volume 1, to be effective 8/21/09.

Filed Date: 08/21/2009.

Accession Number: 20090824–0024.

Comment Date: 5 p.m. Eastern Time on Wednesday, September 2, 2009.

Docket Numbers: RP09–917–000.

Applicants: Pine Needle LNG Company, LLC.

Description: Pine Needle LNG Company, LLC submits Eighteenth Revised Sheet 4 to FERC Gas Tariff, Original Volume 1, to be effective 10/1/09 *etc.*

Filed Date: 08/21/2009.

Accession Number: 20090824–0023.

Comment Date: 5 p.m. Eastern Time on Wednesday, September 2, 2009.

Docket Numbers: RP09–918–000.

Applicants: Transcontinental Gas Pipe Line Company.

Description: Transcontinental Gas Pipe Line Company, LLC submits Third Revised Sheet 21 *et al.* to FERC Gas Tariff, Fourth Revised Volume 1, to be effective 10/1/09.

Filed Date: 08/21/2009.

Accession Number: 20090824–0022.

Comment Date: 5 p.m. Eastern Time on Wednesday, September 2, 2009.

Any person desiring to intervene or to protest in any of the above proceedings must file in accordance with Rules 211 and 214 of the Commission's Rules of Practice and Procedure (18 CFR 385.211 and 385.214) on or before 5 p.m. Eastern time on the specified comment date. It is not necessary to separately intervene again in a subdocket related to a compliance filing if you have previously

intervened in the same docket. Protests will be considered by the Commission in determining the appropriate action to be taken, but will not serve to make protestants parties to the proceeding. Anyone filing a motion to intervene or protest must serve a copy of that document on the Applicant. In reference to filings initiating a new proceeding, interventions or protests submitted on or before the comment deadline need not be served on persons other than the Applicant.

The Commission encourages electronic submission of protests and interventions in lieu of paper, using the FERC Online links at *http://www.ferc.gov.* To facilitate electronic service, persons with Internet access who will eFile a document and/or be listed as a contact for an intervenor must create and validate an eRegistration account using the eRegistration link. Select the eFiling link to log on and submit the intervention or protests.

Persons unable to file electronically should submit an original and 14 copies of the intervention or protest to the Federal Energy Regulatory Commission, 888 First St., NE., Washington, DC 20426.

The filings in the above proceedings are accessible in the Commission's eLibrary system by clicking on the appropriate link in the above list. They are also available for review in the Commission's Public Reference Room in Washington, DC. There is an eSubscription link on the Web site that enables subscribers to receive e-mail notification when a document is added to a subscribed docket(s). For assistance with any FERC Online service, please e-mail *FERCOnlineSupport@ferc.gov* or call (866) 208–3676 (toll free). For TTY, call (202) 502–8659.

Nathaniel J. Davis, Sr.,

Deputy Secretary.

[FR Doc. E9–21249 Filed 9–2–09; 8:45 am]

BILLING CODE 6717–01–P

DEPARTMENT OF ENERGY

Federal Energy Regulatory Commission

[Project No. 2088–075]

South Feather Water and Power Agency; Notice of Intent To Prepare an Environmental Document and Soliciting Comments

August 27, 2009.

Take notice that the following hydroelectric application has been filed with the Commission and is available for public inspection:

a. *Application Type:* Intent to raise dam crest and modify spillway.

b. *Project No:* 2088–075.

c. *Date Filed:* May 21, 2009.

d. *Applicant:* South Feather Water and Power Agency .

e. *Name of Project:* South Feather Power Project.

f. *Location:* The South Feather Power Project is located on the South Fork Feather River, Lost Creek, and Slate Creek in Butte, Plumas, and Yuba Counties, California. This project occupies federal and non-federal lands.

g. *Filed Pursuant to:* Federal Power Act, 16 U.S.C. 791a–825r.

h. *Applicant Contact:* Kathy Zancanella, South Feather Water and Power Agency Power Division, 2310 Oro Quincy Highway, Oroville, CA 95966, Tel: (503) 534–1221.

i. *FERC Contact:* Joy Jones, Telephone (202) 502–6760, and e-mail: *joy.jones@ferc.gov.*

j. *Deadline for Filing Comments, Motions To Intervene, and Protests:* September 28, 2009.

All documents (original and eight copies) should be filed with: Secretary, Federal Energy Regulatory Commission, 888 First Street, NE., Washington, DC 20426.

The Commission's Rules of Practice and Procedure require all interveners filing documents with the Commission to serve a copy of that document on each person whose name appears on the official service list for the project. Further, if an intervener files comments or documents with the Commission relating to the merits of an issue that may affect the responsibilities of a particular resource agency, they must also serve a copy of the document on that resource agency. A copy of any motion to intervene must also be served upon each representative of the Applicant specified in the particular application.

k. *Description of Request:* South Feather Water and Power Agency has filed an Environmental Report addressing its intent to modify the crest of Sly Creek Dam, part of the South Feather Power Project (FERC No. 2088). The project consists of four separate developments: Sly Creek, Woodleaf, Forbestown and Kelly Ridge. The proposed work at Sly Creek Dam would take place within the Sly Creek development. Water from Sly Creek reservoir is controlled by Sly Creek Dam, which releases water to the Lost Creek reservoir downstream of the dam. A hydraulic study on Sly Creek reservoir included an estimate of the probable maximum flood (PMF) flow event for the reservoir, which indicated that during a PMF event, the dam crest would overtop unless it was raised and/or the spillway was modified. To ensure the licensee's compliance with FERC engineering guidelines and safety regulations, modifications to the dam are necessary. The licensee is proposing to raise the dam crest, replace the spillway gate and platform, raise the abutment walls of the spillway channel, and improve the roadway approaching the spillway and associated drainage structures. Under the licensee's proposal, the operating level of Sly Creek reservoir's water surface elevation would remain consistent with the original water surface elevation approved in the project license.

The Commission intends to prepare an environmental document under the National Environmental Policy Act (NEPA) for the Sly Creek Dam crest raise project. The NEPA document will be used by the Commission to identify environmental impacts and to identify measures that would help mitigate the impacts caused by modification activities.

l. *Locations of the Application:* A copy of the application is available for inspection and reproduction at the Commission's Public Reference Room, located at 888 First Street, NE., Room 2A, Washington, DC 20426. This filing may also be viewed on the Commission's Web site at *http://www.ferc.gov* using the ''eLibrary'' link. Enter the docket number excluding the last three digits in the docket number field to access the document. You may also register online at *http://www.ferc.gov/docs-filing/esubscription.asp* to be notified via email of new filings and issuances related to this or other pending projects. For assistance, call 1–866–208–3676 or e-mail *FERCOnlineSupport@ferc.gov,* for TTY, call (202) 502–8659.

m. Individuals desiring to be included on the Commission's mailing list should so indicate by writing to the Secretary of the Commission.

n. *Comments:* Anyone may submit comments with respect to the licensee's proposed activities. In determining the appropriate action to take, the Commission will consider all comments filed. Any comments must be received on or before the specified comment date for the particular application.

o. Any filing made with the Commission must bear in all capital letters the title ''COMMENTS'' and the Project Number (P–2088–075) of the particular application to which the filing refers.

p. *Agency Comments:* Federal, state, and local agencies are invited to file

comments on the described application. A copy of the application may be obtained by agencies directly from the Applicant. If an agency does not file comments within the time specified for filing comments, it will be presumed to have no comments. One copy of an agency's comments must also be sent to the Applicant's representatives.

q. Comments may be filed electronically via the Internet in lieu of paper. See, 18 CFR 385.2001(a)(1)(iii) and the instructions on the Commission's Web site at *http://www.ferc.gov* under the ''e-Filing'' link.

Kimberly D. Bose,

Secretary.

[FR Doc. E9–21245 Filed 9–2–09; 8:45 am]

BILLING CODE 6717–01–P

DEPARTMENT OF ENERGY

Federal Energy Regulatory Commission

Notice of Filing

August 27, 2009.

Take notice that the Commission has received the following Natural Gas Pipeline Rate and Refund Report filings:

Docket Numbers: RP96–200–224.

Applicants: CenterPoint Energy Gas Transmission Comp

Description: CenterPoint Energy Gas Transmission Co. submits an amended negotiated rate agreement with Cross Timbers Energy Services, Inc.

Filed Date: 08/03/2009.

Accession Number: 20090804–0157.

Comment Date: 5 p.m. Eastern Time on Monday, August 17, 2009.

Any person desiring to intervene or to protest in any of the above proceedings must file in accordance with Rules 211 and 214 of the Commission's Rules of Practice and Procedure (18 CFR 385.211 and 385.214) on or before 5 p.m. Eastern time on the specified comment date. It is not necessary to separately intervene again in a subdocket related to a compliance filing if you have previously intervened in the same docket. Protests will be considered by the Commission in determining the appropriate action to be taken, but will not serve to make protestants parties to the proceeding. Anyone filing a motion to intervene or protest must serve a copy of that document on the Applicant. In reference to filings initiating a new proceeding, interventions or protests submitted on or before the comment deadline need not be served on persons other than the Applicant.

The Commission encourages electronic submission of protests and interventions in lieu of paper, using the FERC Online links at *http://www.ferc.gov.* To facilitate electronic service, persons with Internet access who will eFile a document and/or be listed as a contact for an intervenor must create and validate an eRegistration account using the eRegistration link. Select the eFiling link to log on and submit the intervention or protests.

Persons unable to file electronically should submit an original and 14 copies of the intervention or protest to the Federal Energy Regulatory Commission, 888 First St., NE., Washington, DC 20426.

The filings in the above proceedings are accessible in the Commission's eLibrary system by clicking on the appropriate link in the above list. They are also available for review in the Commission's Public Reference Room in Washington, DC. There is an eSubscription link on the Web site that enables subscribers to receive e-mail notification when a document is added to a subscribed dockets(s). For assistance with any FERC Online service, please e-mail *FERCOnlineSupport@ferc.gov.* or call (866) 208–3676 (toll free). For TTY, call (202) 502–8659.

Nathaniel J. Davis, Sr.,

Deputy Secretary.

[FR Doc. E9–21248 Filed 9–2–09; 8:45 am]

BILLING CODE 6717–01–P

DEPARTMENT OF ENERGY

Federal Energy Regulatory Commission

[Docket No. ER09–1400–000]

Milford Wind Corridor Phase I, LLC; Notice of Filing

August 27, 2009.

Take notice that, on August 26, 2009, Milford Wind Corridor Phase I, LLC filed to supplement its filing in the above-captioned proceeding with information required under the Commission's regulations. Such filing served to reset the filing date in this proceeding.

Any person desiring to intervene or to protest this filing must file in accordance with Rules 211 and 214 of the Commission's Rules of Practice and Procedure (18 CFR 385.211, 385.214). Protests will be considered by the Commission in determining the appropriate action to be taken, but will not serve to make protestants parties to the proceeding. Any person wishing to become a party must file a notice of intervention or motion to intervene, as appropriate. Such notices, motions, or protests must be filed on or before the comment date. Anyone filing a motion to intervene or protest must serve a copy of that document on the Applicant and all the parties in this proceeding.

The Commission encourages electronic submission of protests and interventions in lieu of paper using the ''eFiling'' link at *http://www.ferc.gov.* Persons unable to file electronically should submit an original and 14 copies of the protest or intervention to the Federal Energy Regulatory Commission, 888 First Street, NE., Washington, DC 20426.

This filing is accessible on-line at *http://www.ferc.gov*, using the ''eLibrary'' link and is available for review in the Commission's Public Reference Room in Washington, DC. There is an ''eSubscription'' link on the Web site that enables subscribers to receive e-mail notification when a document is added to a subscribed docket(s). For assistance with any FERC Online service, please e-mail *FERCOnlineSupport@ferc.gov*, or call (866) 208–3676 (toll free). For TTY, call (202) 502–8659.

Comment Date: 5 p.m. Eastern Time on September 16, 2009.

Kimberly D. Bose,

Secretary.

[FR Doc. E9–21243 Filed 9–2–09; 8:45 am]

BILLING CODE 6717–01–P

DEPARTMENT OF ENERGY

Federal Energy Regulatory Commission

[Docket No. CP09–457–000]

Kinder Morgan Louisiana Pipeline LLC; Notice of Request Under Blanket Authorization

August 27, 2009.

Take notice that on August 21, 2009, Kinder Morgan Louisiana Pipeline LLC (KMLP), filed in Docket No. CP09–457–000, a prior notice request pursuant to sections 157.205, 157.208, 157.211 and 157.212 of the Commission's regulations under the Natural Gas Act (NGA), for authorization to construct and operate facilities to connect the KMLP system to Egan Hub Storage, LLC (Egan Hub) in Acadia Parish, Louisiana in order to deliver revaporized liquefied natural gas to Egan Hub and subsequently to receive gas from Egan Hub, all as more fully set forth in the application which is on file with the Commission and open to public inspection. KMLP proposes to perform these activities under its blanket certificate issued June 22, 2007,

in Docket No. CP06–451–000 [119 FERC ¶ 61,309 (2007)].

The filing may be viewed on the Web at *http://www.ferc.gov* using the ''eLibrary'' link. Enter the docket number excluding the last three digits in the docket number field to access the document. For assistance, contact FERC at *FERCOnlineSupport@ferc.gov* or call toll-free, (886) 208–3676 or TYY, (202) 502–8659.

Specifically, the facilities to be constructed by KMLP include approximately 300 feet of 24-inch lateral, a bi-directional meter station, piping and valves, electronic flow measurement equipment and such other appurtenant facilities as deemed necessary. The remainder of the interconnect facilities will be constructed by Egan Hub. This interconnect will allow KMLP to deliver up to 500 million standard cubic feet per day of re-vaporized liquefied natural gas to Egan Hub and subsequently to receive like quantities of gas from Egan Hub. The interconnect facilities will provide shippers on KMLP's system access to a new storage development. The estimated cost of the project is approximately $4.85 million. The proposed in-service date for the interconnect facilities is March 1, 2010.

Any questions regarding this application may be directed to Norman Watson, Director, Business Development, Kinder Morgan Louisiana Pipeline LLC, 500 Dallas Street, Suite 1000, Houston, Texas 77002 (713) 369–9219; or to Bruce Newsome, Vice President, 3250 Lacey Road, Suite 700, Downers Grove, IL 60515, (630) 725–3070.

Any person or the Commission's Staff may, within 60 days after the issuance of the instant notice by the Commission, file pursuant to Rule 214 of the Commission's Procedural Rules (18 CFR 385.214) a motion to intervene or notice of intervention and, pursuant to section 157.205 of the Commission's Regulations under the NGA (18 CFR 157.205) a protest to the request. If no protest is filed within the time allowed therefore, the proposed activity shall be deemed to be authorized effective the day after the time allowed for protest. If a protest is filed and not withdrawn within 30 days after the time allowed for filing a protest, the instant request shall be treated as an application for authorization pursuant to section 7 of the NGA.

The Commission strongly encourages electronic filings of comments, protests, and interventions via the Internet in lieu of paper. See 18 CFR 385.2001(a)(1)(iii) and the instructions on the Commission's Web site (*http://www.ferc.gov*) under the ''e-Filing'' link. Persons unable to file electronically should submit an original and 14 copies of the protest or intervention to the Federal Energy regulatory Commission, 888 First Street, NE., Washington, DC 20426.

Comment Date: 5 p.m. Eastern Time on October 26, 2009.

Kimberly D. Bose,

Secretary.

[FR Doc. E9–21239 Filed 9–2–09; 8:45 am]

BILLING CODE 6717–01–P

ENVIRONMENTAL PROTECTION AGENCY

[Docket ID Number EPA–HQ–OECA–2008–0803; FRL–8952–6]

Clean Water Act Class II: Proposed Administrative Settlement, Penalty Assessment and Opportunity To Comment Regarding HSBC USA Inc. and HSBC Finance Corporation

AGENCY: Environmental Protection Agency (EPA).

ACTION: Notice.

SUMMARY: EPA has entered into a Consent Agreement with HSBC Finance Corporation and HSBC USA Inc. (HSBC or Respondent) to resolve violations of the Clean Water Act (CWA), the Clean Air Act (CAA) and requirements adopted as part of a State Implementation Plan (SIP) pursuant to the CAA, and the Emergency Planning and Community Right-to-Know Act (EPCRA), and their implementing regulations.

The Administrator is hereby providing public notice of this Consent Agreement and proposed Final Order, and providing an opportunity for interested persons to comment on the CWA portion of this Consent Agreement, in accordance with CWA section 311(j), 33 U.S.C. 1321(j). Additionally, notice is being provided on the CAA and EPCRA portions of this Consent Agreement.

DATES: Comments are due on or before October 5, 2009.

ADDRESSES: Comments may be submitted electronically, by mail, or through hand delivery/courier. Follow the detailed instructions as provided in Section I.B of the **SUPPLEMENTARY INFORMATION** section.

FOR FURTHER INFORMATION CONTACT: Beth Cavalier, Special Litigation and Projects Division (2248–A), U.S. Environmental Protection Agency, 1200 Pennsylvania Avenue, NW., Washington, DC 20460; telephone (202) 564–3271; *fax:* (202) 564–0010; *e-mail: cavalier.beth@epa.gov.*

SUPPLEMENTARY INFORMATION:

I. General Information

A. How Can I Get Copies Of This Document and Other Related Information?

1. *Docket.* EPA has established an official public docket for this action under Docket ID No. EPA–HQ–OECA–2008–0803.

The official public docket consists of the Consent Agreement, proposed Final Order, and any public comments received. Although a part of the official docket, the public docket does not include Confidential Business Information (CBI) or other information whose disclosure is restricted by statute. The official public docket is the collection of materials that is available for public viewing at the Enforcement and Compliance Docket Information Center (ECDIC) in the EPA Docket Center, (EPA/DC) EPA West, Room B102, 1301 Constitution Ave., NW., Washington, DC. The EPA Docket Center Public Reading Room is open from 8:30 a.m. to 4:30 p.m., Monday through Friday, excluding legal holidays. The telephone number for the Public Reading Room is (202) 566–1744, and the telephone number for the ECDIC is (202) 566–1752. A reasonable fee may be charged by EPA for copying docket materials.

2. *Electronic Access.* You may access this Federal Register document electronically through the EPA Internet under the ''**Federal Register**'' listings at *http://www.epa.gov/fedrgstr/.*

An electronic version of the public docket is available through EPA's electronic public docket and comment system (EPA Dockets). You may use EPA Dockets at *http://www.regulations.gov/* to submit or view public comments, access the index listing of the contents of the official public docket, and to access those documents in the public docket that are available electronically. Once in the system, select ''search,'' then key in Docket ID No. EPA–HQ–OECA–2008–0803.

Certain types of information will not be placed in the EPA Dockets. Information claimed as CBI and other information whose disclosure is restricted by statute, which is not included in the official public docket, will not be available for public viewing in EPA's electronic public docket. EPA's policy is that copyrighted material will not be placed in EPA's electronic public docket but will be available only in printed, paper form in the official public

docket. To the extent feasible, publicly available docket materials will be made available in EPA's electronic public docket. When a document is selected from the index list in EPA Dockets, the system will identify whether the document is available for viewing in EPA's electronic public docket. Although not all docket materials may be available electronically, you may still access any of the publicly available docket materials through the docket facility identified in Section I.A.1.

For public commentors, it is important to note that EPA's policy is that public comments, whether submitted electronically or in paper, will be made available for public viewing in EPA's electronic public docket as EPA receives them and without change, unless the comment contains copyrighted material, CBI, or other information whose disclosure is restricted by statute. When EPA identifies a comment containing copyrighted material, EPA will provide a reference to that material in the version of the comment that is placed in EPA's electronic public docket. The entire printed comment, including the copyrighted material, will be available in the public docket.

Public comments submitted on computer disks that are mailed or delivered to the docket will be transferred to EPA's electronic public docket. Public comments that are mailed or delivered to the Docket will be scanned and placed in EPA's electronic public docket. Where practical, physical objects will be photographed, and the photograph will be placed in EPA's electronic public docket along with a brief description written by the docket staff.

B. How and to Whom Do I Submit Comments?

You may submit comments electronically, by mail, or through hand delivery/courier. To ensure proper receipt by EPA, identify the appropriate docket identification number in the subject line on the first page of your comment. Please ensure that your comments are submitted within the specified comment period. Comments received after the close of the comment period will be marked ''late.'' EPA is not required to consider these late comments.

1. *Electronically.* If you submit an electronic comment as prescribed below, EPA recommends that you include your name, mailing address, and an e-mail address or other contact information in the body of your comment. Also include this contact information on the outside of any disk or CD ROM you submit, and in any cover letter accompanying the disk or CD ROM. This ensures that you can be identified as the submitter of the comment and allows EPA to contact you in case EPA cannot read your comment due to technical difficulties or needs further information on the substance of your comment. EPA's policy is that EPA will not edit your comment, and any identifying or contact information provided in the body of a comment will be included as part of the comment that is placed in the official public docket, and made available in EPA's electronic public docket. If EPA cannot read your comment due to technical difficulties and cannot contact you for clarification, EPA may not be able to consider your comment.

i. *EPA Dockets.* Your use of EPA's electronic public docket to submit comments to EPA electronically is EPA's preferred method for receiving comments. Go directly to EPA Dockets at *http://www.regulations.gov/,* and follow the online instructions for submitting comments. Once in the system, select ''search,'' and then key in Docket ID No. EPA–HQ–OECA–2008–0803. The system is an ''anonymous access'' system, which means EPA will not know your identity, e-mail address, or other contact information unless you provide it in the body of your comment.

ii. *E-mail.* Comments may be sent by electronic mail (e-mail) to *docket.oeca@epa.gov,* Attention Docket ID No. EPA–HQ–OECA–2008–0803. In contrast to EPA's electronic public docket, EPA's e-mail system is not an ''anonymous access'' system. If you send an e-mail comment directly to the Docket without going through EPA's electronic public docket, EPA's e-mail system automatically captures your e-mail address. E-mail addresses that are automatically captured by EPA's e-mail system are included as part of the comment that is placed in the official public docket, and made available in EPA's electronic public docket.

iii. *Disk or CD–ROM.* You may submit comments on a disk or CD–ROM that you mail to the mailing address identified in Section I.A.1. These electronic submissions will be accepted in WordPerfect or ASCII file format. Avoid the use of special characters and any form of encryption.

2. *By Mail.* Send your comments to: Enforcement and Compliance Docket Information Center, Environmental Protection Agency, Mailcode: 2201T, 1200 Pennsylvania Ave., NW., Washington, DC, 20460, Attention Docket ID No. EPA–HQ–OECA–2008–0803.

3. *By Hand Delivery or Courier.* Deliver your comments to the address provided in Section I.A.1., Attention Docket ID No. EPA–HQ–OECA–2008–0803. Such deliveries are only accepted during the Docket's normal hours of operation as identified in Section I.A.1.

C. How Should I Submit CBI to the Agency?

Do not submit information that you consider to be CBI electronically through EPA's electronic public docket or by e-mail. You may claim information that you submit to EPA as CBI by marking any part or all of that information as CBI (if you submit CBI on disk or CD–ROM, mark the outside of the disk or CD–ROM as CBI and then identify electronically within the disk or CD–ROM the specific information that is CBI). Information so marked will not be disclosed except in accordance with procedures set forth in 40 CFR Part 2.

In addition to one complete version of the comment that includes any information claimed as CBI, a copy of the comment that does not contain the information claimed as CBI must be submitted for inclusion in the public docket and EPA's electronic public docket. If you submit the copy that does not contain CBI on disk or CD–ROM, mark the outside of the disk or CD–ROM clearly that it does not contain CBI. Information not marked as CBI will be included in the public docket and EPA's electronic public docket without prior notice. If you have any questions about CBI or the procedures for claiming CBI, please consult the person identified in the **FOR FURTHER INFORMATION CONTACT** section.

II. Background

Respondent is HSBC Finance Corporation, a financial services organization located at 26525 N. Riverwoods Blvd, Mettawa, Illinois 60045, and incorporated in the state of Delaware. Respondent also includes HSBC USA Inc., a banking business located at 452 Fifth Street, New York, New York 10018, and incorporated in the state of Maryland. The HSBC facilities that underwent audits included office buildings and data processing centers.

On November 29, 2007, Respondent entered into a Compliance Audit Agreement with EPA, in which Respondent agreed to conduct a systematic, documented, periodic and objective review of its compliance with applicable provisions of the CWA, the CAA, and EPCRA. Respondent further agreed to submit progress reports detailing the status of the compliance audit, specific facilities reviewed, and

detailed information setting forth violations discovered and corrective actions taken. Further, Respondent agreed, in entering into the Compliance Audit Agreement, to specific civil penalties for certain violations of the CWA, the CAA, and EPCRA. As agreed upon with EPA, Respondent submitted periodic progress reports and submitted a final audit report to EPA on February 28, 2008, and an addendum to the final audit report to EPA on May 1, 2008.

Specifically, Respondent disclosed that it failed to prepare and implement a Spill Prevention, Control, and Countermeasure (SPCC) plan and/or failed to have adequate secondary containment in violation of CWA section 311(j), 33 U.S.C. 1321(j), and 40 CFR Part 112 for eighteen facilities located in the following states: California, Delaware, Florida, Illinois, Kentucky, New Jersey, New York, Nevada, Oregon, South Carolina, and Texas. EPA, as authorized by CWA section 311(b)(6), 33 U.S.C. 1321(b)(6), has assessed a civil penalty for these violations.

Respondent disclosed that it failed to comply with CAA section 110, 42 U.S.C. 7410, and requirements adopted as part of State Implementation Plans (SIPs) for eight facilities located in the following states: California, Illinois, Maryland, New Jersey, Texas, and Virginia. EPA, as authorized by CAA section 113, 42 U.S.C. 7413, has assessed a civil penalty for these violations.

Respondent disclosed that it failed to comply with CAA section 608, 42 U.S.C. 7671g, when it failed to keep servicing records documenting the date and type of service, as well as the quantity of refrigerant purchased and added, for appliances containing greater than fifty pounds of refrigerant located at four facilities located in the following states: California, Illinois, and New York. EPA, as authorized by CAA section 113, 42 U.S.C. 7413, has assessed a civil penalty for these violations.

Respondent disclosed that it failed to comply with EPCRA section 302, 42 U.S.C. 11002, and the regulations found at 40 CFR 355.30, when it failed to notify the State Emergency Response Committee (SERC) for twenty-eight facilities located in the following states: California, Delaware, Florida, Illinois, Indiana, New Jersey, New York, Nevada, Oregon, South Carolina, South Dakota, Texas, and Virginia.

Respondent disclosed that it failed to comply with EPCRA section 303, 42 U.S.C. 11003, and the regulations found at 40 CFR 355.30, when it failed to designate a facility emergency coordinator and notify the Local Emergency Planning Committee (LEPC) at twenty-eight facilities in the following states: California, Delaware, Florida, Illinois, Indiana, New Jersey, New York, Nevada, Oregon, South Carolina, South Dakota, Texas, and Virginia.

Respondent disclosed that it failed to comply with EPCRA section 311, 42 U.S.C. 11021, and the regulations found at 40 CFR Part 370, when it failed to prepare and submit a Material Safety Data Sheet (MSDS) for a hazardous chemical(s) and extremely hazardous chemical(s) at thirty-one (31) facilities located in the following states: California, Delaware, Florida, Illinois, Indiana, Kentucky, New Jersey, New York, Nevada, Oregon, South Carolina, South Dakota, Texas, and Virginia. EPA, as authorized by EPCRA section 325, 42 U.S.C. 11045, has assessed a civil penalty for these violations.

Respondent disclosed that it failed to comply with EPCRA section 312, 42 U.S.C. 11022, and the regulations found at 40 CFR Part 370, when it failed to prepare and submit emergency and chemical inventory forms to the LEPC, SERC, and the fire department at thirty-two (32) facilities located in the following states: California, Delaware, Florida, Illinois, Indiana, Kentucky, New Jersey, New York, Nevada, Oregon, South Carolina, South Dakota, Texas, and Virginia. EPA, as authorized by EPCRA section 325, 42 U.S.C. 11045, has assessed a civil penalty for these violations.

EPA determined that Respondent satisfactorily completed its audit and has met all conditions of the Compliance Audit Agreement. EPA has proposed a settlement penalty amount of thirty-six thousand and eighty-three dollars ($36,083). This amount is based on the penalty amounts agreed upon in the Compliance Audit Agreement for certain violations and reflects consideration of potential economic benefit gained by Respondent, attributable to its delayed compliance with the CAA, CWA, and EPCRA regulations, and the potential for harm that could have resulted from the violations.

The total civil penalty assessed for settlement purposes is thirty-six thousand and eighty-three dollars ($36,083). Respondent has agreed to pay this amount. EPA and Respondent negotiated and signed an administrative consent agreement, following the Consolidated Rules of Practice, 40 CFR 22.13(b), on May 8, 2009, (*In the Matter of: HSBC USA Inc. and HSBC Finance Corporation,* Docket Nos. CAA–HQ–2008–8004, CWA–HQ–2008–8004, and EPCRA–HQ–2008–8004). This consent agreement is subject to public notice and comment under CWA section 311(b)(6), 33 U.S.C. 1321(b)(6). The full consent agreement is available for public review and comment at *http://www.regulations.gov/,* Docket ID No. EPA–HQ–OECA–2008–0803.

Under CWA section 311(b)(6)(A), 33 U.S.C. 1321(b)(6)(A), any owner, operator, or person in charge of a vessel, onshore facility, or offshore facility from which oil is discharged in violation of CWA section 311(b)(3), 33 U.S.C. 1321(b)(3), or who fails or refuses to comply with any regulations that have been issued under CWA section 311(j), 33 U.S.C. 1321(j), may be assessed an administrative civil penalty of up to $177,500 by EPA. Class II proceedings under CWA section 311(b)(6), 33 U.S.C. 1321(b)(6), are conducted in accordance with 40 CFR Part 22.

Under CAA section 113, 42 U.S.C. 7413, the Administrator may issue an administrative penalty order to any person who has violated or is in violation of any requirement or prohibition of an applicable implementation plan or permit. Proceedings under CAA section 113, 42 U.S.C. 7413, are conducted in accordance with 40 CFR Part 22.

Under EPCRA section 325, 42 U.S.C. 11045, the Administrator may issue an administrative order assessing a civil penalty against any person who has violated applicable emergency planning or right-to-know requirements, or any other requirement of EPCRA. Proceedings under EPCRA section 325, 42 U.S.C 11045, are conducted in accordance with 40 CFR Part 22.

The procedures by which the public may comment on a proposed Class II penalty order, or participate in a CWA Class II penalty proceeding, are set forth in 40 CFR 22.45. The deadline for submitting public comment on this proposed final order is October 5, 2009. All comments will be transferred to the Environmental Appeals Board (EAB) of EPA for consideration. The powers and duties of the EAB are outlined in 40 CFR 22.4(a).

Pursuant to CWA section 311(b)(6)(C), 33 U.S.C. 1321(b)(6)(C), EPA will not issue an order in this proceeding prior to the close of the public comment period.

Dated: August 27, 2009.

Bernadette Rappold,

Director, Special Litigation and Projects Division, Office of Enforcement and Compliance Assurance.

[FR Doc. E9–21289 Filed 9–2–09; 8:45 am]

BILLING CODE 6560–50–P

FARM CREDIT SYSTEM INSURANCE CORPORATION

Farm Credit System Insurance Corporation Board; Regular Meeting

SUMMARY: Notice is hereby given of the regular meeting of the Farm Credit System Insurance Corporation Board (Board).

DATE AND TIME: The meeting of the Board will be held at the offices of the Farm Credit Administration in McLean, Virginia, on September 10, 2009, from 10:30 a.m. until such time as the Board concludes its business.

FOR FURTHER INFORMATION CONTACT: Roland E. Smith, Secretary to the Farm Credit System Insurance Corporation Board, (703) 883–4009, TTY (703) 883–4056.

ADDRESSES: Farm Credit System Insurance Corporation, 1501 Farm Credit Drive, McLean, Virginia 22102.

SUPPLEMENTARY INFORMATION: Parts of this meeting of the Board will be open to the public (limited space available) and parts will be closed to the public. In order to increase the accessibility to Board meetings, persons requiring assistance should make arrangements in advance. The matters to be considered at the meeting are:

Closed Session

- Report on System Performance

Open Session

A. *Approval of Minutes*

- June 10, 2009 (Open and Closed)

B. *Business Reports*

- Quarterly Financial Reports
- Report on Insured and Other Obligations
- Quarterly Report on Annual Performance Plan

C. *New Business*

- Annual Performance Plan FY 2010–2011
- Proposed 2010 and 2011 Budgets
- Insurance Fund Progress Review and Setting of Premium Range Guidance for 2010

Dated: August 28, 2009.

Roland E. Smith,

Secretary, Farm Credit System Insurance Corporation Board.

[FR Doc. E9–21298 Filed 9–2–09; 8:45 am]

BILLING CODE 6710–01–P

DEPARTMENT OF HEALTH AND HUMAN SERVICES

Centers for Disease Control and Prevention

[60Day–0920–0573]

Proposed Data Collections Submitted for Public Comment and Recommendations

In compliance with the requirement of Section 3506(c)(2)(A) of the Paperwork Reduction Act of 1995 for opportunity for public comment on proposed data collection projects, the Centers for Disease Control and Prevention (CDC) will publish periodic summaries of proposed projects. To request more information on the proposed projects or to obtain a copy of the data collection plans and instruments, call 404–639–5960 or send comments to Maryam Daneshvar, CDC Reports Clearance Officer, 1600 Clifton Road, MS–D74, Atlanta, GA 30333 or send an e-mail to *omb@cdc.gov.*

Comments are invited on: (a) Whether the proposed collection of information is necessary for the proper performance of the functions of the agency, including whether the information shall have practical utility; (b) the accuracy of the agency's estimate of the burden of the proposed collection of information; (c) ways to enhance the quality, utility, and clarity of the information to be collected; and (d) ways to minimize the burden of the collection of information on respondents, including through the use of automated collection techniques or other forms of information technology. Written comments should be received within 60 days of this notice.

Proposed Project

Adult and Pediatric HIV/AIDS Confidential Case Reports for National HIV/AIDS Surveillance [0920–0573 expiration 02/28/2010]—Revision—National Center for HIV/AIDS, Viral Hepatitis, STD, and TB Prevention (NCHHSTP), Centers for Disease Control and Prevention (CDC).

Background and Brief Description

CDC is authorized under Sections 304 and 306 of the Public Health Service Act (42 U.S.C. 242b and 242k) to collect information on cases of human immunodeficiency virus (HIV) infection and acquired immunodeficiency syndrome (AIDS). These national HIV/AIDS surveillance data collected by CDC are the primary source of information used to monitor the extent and characteristics of the HIV epidemic in the U.S.

As science, technology, and our understanding of the epidemic have evolved, the national surveillance system has been updated periodically to meet the nation's needs for information. CDC in collaboration with health departments in the 50 states, the District of Columbia, and U.S. dependent areas, conducts national surveillance for cases of HIV infection that includes critical data across the spectrum of HIV disease from HIV diagnosis, to AIDS, the end-stage disease caused by infection with HIV, and death. In addition, this national system provides essential data to estimate HIV incidence and monitor patterns in viral resistance and HIV–1 subtypes in the U.S.

Since 1993, these data have been maintained and reported through the HIV/AIDS reporting system (HARS) software. In 2010, the new enhanced electronic HIV/AIDS reporting system (eHARS) will be fully deployed. The revisions requested include additional data elements for eHARS that will allow better tracking of documents and flow of previously approved currently collected surveillance data. In addition, CDC is requesting approval of a revised data collection form for enhanced perinatal surveillance (EPS) that includes non-substantial editorial changes aimed at improving the format and usability of the EPS form. Revisions include improved wording of terms and changes in the format of some response options.

The purpose of HIV/AIDS surveillance data is to monitor trends in HIV/AIDS and describe the characteristics of infected persons (*e.g.,* demographics, modes of exposure to HIV, clinical and laboratory markers of HIV disease, manifestations of severe HIV disease, and deaths among persons with HIV/AIDS). HIV/AIDS surveillance data are widely used at all government levels to assess the impact of HIV infection on morbidity and mortality, to allocate medical care resources and services, and to guide prevention and disease control activities.

CDC provides funding for 59 jurisdictions to provide adult and pediatric HIV case reports. Health department staff compile information from laboratories, physicians, hospitals, clinics and other health care providers in order to complete the HIV and pediatric case reports. CDC estimates that 1,839 adult HIV case reports and 8 pediatric case reports are processed by each health department annually.

These data are recorded on standard paper case report forms and entered into the eHARS reporting system. Updates to case reports are also entered into the eHARS system by health departments as additional information may be received

from laboratories, vital statistics, or additional providers. CDC estimates approximately 97 updates to case reports will be processed by each of the 59 health departments annually. Case report information compiled over time by health departments is then re-identified and forwarded to CDC on a monthly basis (twelve times a year) for inclusion in the national HIV surveillance database.

Supplemental surveillance data are collected in a subset of areas to provide additional information necessary to estimate HIV incidence, to better describe the extent of HIV viral resistance and quantify HIV subtypes among persons infected with HIV, and to monitor and evaluate perinatal HIV prevention efforts. Health departments funded for these supplemental data collections obtain this information from laboratories, health providers, and medical records. CDC estimates that on average 2,437 reports containing incidence data elements will be processed annually, by each of the 25 health departments funded to collect incidence data annually. Additionally, an estimated 2,019 reports containing additional viral resistance data elements will be processed on average, annually, by each of the 11 health departments conducting variant and resistant HIV surveillance (VARHS) annually. An estimated 167 reports containing perinatal surveillance data elements will be processed on average by each of the 15 health departments reporting data collected as part of enhanced perinatal surveillance (EPS). Data collected for these 3 supplemental data collections are also reported monthly to CDC.

ESTIMATE OF ANNUALIZED BURDEN TABLE

Form	Type of respondent	No. of respondents	No. of responses per respondent	Avg. burden per response (in hours)	Total annual burden (in hours)
Adult HIV/AIDS Case Reports	Health Departments	59	1,839	20/60	36,167
Peds HIV/AIDS Case Reports	Health Departments	59	8	20/60	157
Case Report Updates	Health Departments	59	97	5/60	477
Incidence	Health Departments	25	2,437	10/60	10,154
VARHS	Health Departments	11	2,019	5/60	1,851
EPS	Health Departments	15	167	1	2,505
Total					51,311

Dated: August 28, 2009.

Maryam I. Daneshvar,

Acting Reports Clearance Officer, Centers for Disease Control and Prevention.

[FR Doc. E9–21284 Filed 9–2–09; 8:45 am]

BILLING CODE 4163–18–P

DEPARTMENT OF HEALTH AND HUMAN SERVICES

Centers for Disease Control and Prevention

[30Day–09–09AR]

Agency Forms Undergoing Paperwork Reduction Act Review

The Centers for Disease Control and Prevention (CDC) publishes a list of information collection requests under review by the Office of Management and Budget (OMB) in compliance with the Paperwork Reduction Act (44 U.S.C. Chapter 35). To request a copy of these requests, call the CDC Reports Clearance Officer at (404) 639–5960 or send an e-mail to *omb@cdc.gov*. Send written comments to CDC Desk Officer, Office of Management and Budget, Washington, DC or by fax to (202) 395–5806. Written comments should be received within 30 days of this notice.

Proposed Project

STD Surveillance Network (SSuN)-NEW- National Center for HIV/AIDS, Viral Hepatitis, Sexually Transmitted Diseases, and Tuberculosis Elimination Programs (NCHHSTP), Centers for Disease Control and Prevention (CDC).

Background and Brief Description

The purpose of the proposed study is to improve the capacity of national, State, and local STD programs to detect, monitor, and respond rapidly to trends in STDs through enhanced collection, reporting, analysis, visualization and interpretation of disease information. The SSuN Project will be an active STD sentinel surveillance network comprised of 12 surveillance sites around the United States. SSuN will use two surveillance strategies to collect information. The first is a STD clinic-based surveillance which will extract data from existing electronic medical records for all patient visits at participating STD clinics over the 3 years. The second is a population-based surveillance in which a sample of individuals reported with gonorrhea to the 12 SSuN state or city health departments are interviewed using locally designed interview templates.

For the clinic-based surveillance, the specified data elements are abstracted on a quarterly basis from existing electronic medical records for all patient visits to participating clinics. Data in the electronic medical record may have been collected at time of registration, during the clinic encounter, or through laboratory testing. For the population-based STD surveillance, the results of interviews will be entered into a developed Microsoft Access database that will be adapted locally for each clinic. High quality, informative, and timely surveillance data are necessary to guide STD programs so interventions are designed and implemented appropriately. Furthermore, surveillance data are necessary for understanding the impact of STD interventions based on the epidemiology of each STD.

This information is being collected to establish an integrated network of sentinel STD clinics and health departments to inform and guide national programs and policies for STD control in the US. It will improve the capacity of national, state, and local STD programs to detect, monitor, and respond to established and emerging trends in STDs, HIV, and viral hepatitis. SSuN will help identify and evaluate the effectiveness of public health interventions to reduce STD morbidity.

The SSuN surveillance platform allows CDC to establish and maintain common standards for data collection, transmission, and analysis, and allows CDC to build and maintain STD surveillance expertise in 12 surveillance areas. Such common systems, established mechanisms of communication, and in-place expertise are all critical components for timely, flexible, and high quality surveillance.

There is no cost to respondents other than their time. The total estimated annual burden hours are 432.

ESTIMATED ANNUALIZED BURDEN HOURS

Types of respondent	Number of respondents	Number of responses per respondent	Average burden per response (in hours)
SSuN site	12	4	2
Gonorrhea Case	2880	1	7/60

Dated: August 28, 2009.

Maryam I. Daneshvar,

Acting Reports Clearance Officer, Centers for Disease Control and Prevention.

[FR Doc. E9–21286 Filed 9–2–09; 8:45 am]

BILLING CODE 4163–18–P

DEPARTMENT OF HEALTH AND HUMAN SERVICES

Substance Abuse and Mental Health Services Administration

Notice of Meeting

Pursuant to Public Law 92–463, notice is hereby given that the Substance Abuse and Mental Health Services Administration (SAMHSA) National Advisory Council will meet on September 25, 2009 in Portland, Oregon.

The meeting is open to the public and will include a report from the SAMHSA Acting Administrator. The meeting will include discussions and presentations from state and local representatives and organizations focusing on substance use prevention and treatment and mental health of children, youth and their families.

Attendance by the public will be limited to space available. Public comments are welcome. The meeting can also be accessed via net-conference. To obtain the call-in numbers and access codes, to submit written or brief oral comments, or to request special accommodations for persons with disabilities, please communicate with the SAMHSA National Advisory Council Designated Federal Official, Ms. Toian Vaughn (see contact information below). You may also register on-line at: *https://nac.samhsa.gov/Registration/meetingsRegistration.aspx*.

Substantive program information and a roster of Council members may be obtained either by accessing the SAMHSA Committee Web site, *https://nac.samhsa.gov/NACcouncil/index.aspx* or by contacting Ms. Vaughn. The transcript for the meeting will be available on the SAMHSA Committee Web site within three weeks after the meeting.

Committee Name: SAMHSA National Advisory Council.

Date/Time/Type: Friday, September 25, 2009, from 9:30 a.m. to 5 p.m.: Open.

Place: Hilton Portland & Executive Towers, Salons II and III, Portland, Oregon.

Contact: Toian Vaughn, M.S.W., Designated Federal Official, SAMHSA National Advisory Council and SAMHSA Committee Management Officer, 1 Choke Cherry Road, Room 8–1089, Rockville, Maryland 20857, Telephone: (240) 276–2307; FAX: (240) 276–2220 and E-mail: *toian.vaughn@samhsa.hhs.gov*.

Toian Vaughn,

Committee Management Officer, Substance Abuse and Mental Health Services Administration.

[FR Doc. E9–21281 Filed 9–2–09; 8:45 am]

BILLING CODE 4162–20–P

DEPARTMENT OF HEALTH AND HUMAN SERVICES

Centers for Disease Control and Prevention

Board of Scientific Counselors, National Center for Health Statistics (BSC, NCHS)

In accordance with section 10(a)(2) of the Federal Advisory Committee Act (Pub. L. 92–463), the Centers for Disease Control and Prevention (CDC), National Center for Health Statistics announces the following meeting of the aforementioned committee:

Times and Dates:

11 a.m.–5:30 p.m., September 24, 2009; 8:30 a.m.–2 p.m., September 25, 2009.

Place: NCHS Headquarters, 3311 Toledo Road, Hyattsville, Maryland 20782.

Status: This meeting is open to the public; however, visitors must be processed in accordance with established Federal policies and procedures. For foreign nationals or non-US citizens, pre-approval is required (please contact Althelia Harris, 301–458–4261, *adw1@cdc.gov* or Virginia Cain, *vcain@cdc.gov* at least 10 days in advance for requirements. All visitors are required to present a valid form of picture identification issued by a State, Federal or international government. As required by the Federal Property Management Regulations, Title 41, Code of Federal Regulation, Subpart 101–20.301, all persons entering in or on Federal controlled property and their packages, briefcases, and other containers in their immediate possession are subject to being x-rayed and inspected. Federal law prohibits the knowing possession or the causing to be present of firearms, explosives and other dangerous weapons and illegal substances. The meeting room accommodates approximately 100 people.

Purpose: This committee is charged with providing advice and making recommendations to the Secretary, Department of Health and Human Services; the Director, CDC; and the Director, NCHS, regarding the scientific and technical program goals and objectives, strategies, and priorities of NCHS.

Matters To Be Discussed: The agenda will include welcome remarks by the Director, NCHS; review of the Long-term Care Statistics program; presentation of the National Survey of Family Growth program; and an open session for comments from the public.

Requests to make oral presentations should be submitted in writing to the contact person listed below. All requests must contain the name, address, telephone number, and organizational affiliation of the presenter.

Written comments should not exceed five single-spaced typed pages in length and must be received by September 11, 2009.

The agenda items are subject to change as priorities dictate.

Contact Person for More Information: Virginia S. Cain, Ph.D., Director of Extramural Research, NCHS, CDC, 3311 Toledo Road, Room 7211, Hyattsville, Maryland 20782, telephone (301) 458–4500, fax (301) 458–4020.

The Director, Management Analysis and Services Office, has been delegated the authority to sign **Federal Register** notices pertaining to announcements of meetings and other committee management activities for both CDC and the Agency for Toxic Substances and Disease Registry.

Dated: August 26, 2009.

Elaine L. Baker,

Director, Management Analysis and Services Office, Centers for Disease Control and Prevention.

[FR Doc. E9–21290 Filed 9–2–09; 8:45 am]

BILLING CODE 4163–18–P

DEPARTMENT OF HEALTH AND HUMAN SERVICES

Centers for Disease Control and Prevention

National Center for Health Statistics (NCHS), Classifications and Public Health Data Standards Staff, Announces the Following Meeting

Name: ICD–9–CM Coordination and Maintenance Committee meeting.

Time and Date: 9 a.m.–4 p.m., September 16–17, 2009.

Place: Centers for Medicare and Medicaid Services (CMS) Auditorium, 7500 Security Boulevard, Baltimore, Maryland.

Status: Open to the public.

Purpose: The ICD–9–CM Coordination and Maintenance (C&M) Committee will hold its second annual meeting of the 2009 calendar year cycle on Wednesday and Thursday September 16–17, 2009. The C&M meeting is a public forum for the presentation of proposed modifications to the International Classification of Diseases, Ninth-Revision, Clinical Modification. There will be 200 telephone lines available from 9 a.m. until 4 p.m. (both days) for those who are unable to attend the meeting in person. The toll-free dial-in number for external participants is 1–877–267–1577; participant code is 974574. Participants attending by telephone do not need to formally register for the meeting. Dial-in lines are available on a first come, first served basis.

Matters To Be Discussed: Tentative agenda items include:

September 16, 2009

ICD–10/MS–DRG update (September 16, 9–11 a.m.)

*Please see list of questions included in this notice.

Insertion of drug-eluting stent into superficial femoral artery.

Circulatory support devices.

Application of lung sealant.

Bronchoscopic bronchial thermoplasty.

Reverse shoulder arthroplasty.

Implantation of antibiotic matrix.

Insertion of hemodynamic monitoring system.

Implantatation of carotid sinus activation device.

Addenda (procedures).

September 17, 2009

Acquired absence of pancreas.

Adverse reactions to blood products.

Cognitive symptoms related to Traumatic Brain Injury (TBI) and other neurological conditions.

Do not resuscitate (DNR).

Heart failure.

IUD surveillance.

Mesh exposure.

Multiple sclerosis expansion.

Neurofibromatosis.

Neurogenic claudication.

Pickwickian syndrome.

Physical restraints.

Stuttering.

Addenda (diagnoses).

Request for Input From Interested Stakeholders Regarding the Freezing of ICD–9–CM and ICD–10–CM/ICD–10–PCS and Related Issues

The ICD–9–CM Coordination and Maintenance Committee is interested in obtaining input on any or all of the following issues:

1. Should ICD–9–CM updates be frozen prior to the October 1, 2013 implementation of ICD–10–CM and ICD–10–PCS?

(a) If yes, should the last update to ICD–9–CM be effective October 1, 2011 (FY 2012) or October 1, 2012 (FY 2013)?

(b) What is the advantage of this date?

(c) What is the disadvantage(s) of freezing the update process?

(d) Do you have any other comments related to freezing the ICD–9–CM classification?

2. Should ICD–10–CM and ICD–10–PCS be frozen prior to the October 1, 2013 implementation of ICD–10–CM and ICD–10–PCS?

(a) If yes, what should be the last update to ICD–10–CM and ICD–10–PCS (FY2012 or FY2013)?

(b) What is the advantage(s) of this date?

(c) What is the disadvantage(s) of freezing the update process?

(d) Do you have any other comments related to freezing the ICD–10–CM and ICD–10–PCS classifications?

3. At what point should the updating of ICD–10–CM and ICD–10–PCS begin again (*e.g.,* October 1, 2014 (FY 2015)?

(a) What is the advantage of this date?

(b) Do you have any other comments related to re-starting the updating process for ICD–10–CM and ICD–10–PCS?

4. What ICD–10 coding products are vendors developing (*e.g.,* ICD–10–CM and ICD–10–PCS code books, encoders, automated mapping applications based on the General Equivalence Mappings)?

5. Currently the CMS abbreviated code titles are limited to 24 characters. With the longer ICD–10–CM and ICD–10–PCS code titles, should consideration be given to expanding these codes titles? If so, how long should the ICD–10-based titles be?

The ICD–9–CM Coordination and Maintenance Committee plans to hear comments on these issues at the September 16, 2009 meeting (9–11 a.m.). We encourage you to attend the meeting and provide these comments and/or to submit written comments on the above issues to Pat Brooks (*patricia.brooks2@cms.hhs.gov* and Donna Pickett (*dfp4@cdc.gov*).

Contact Person for Additional Information: Amy Blum, Medical Systems Specialist, Classifications and Public Health Data Standards Staff, NCHS, 3311 Toledo Road, Room 2402, Hyattsville, Maryland 20782, e-mail *alb8@cdc.gov,* telephone 301–458–4106 (diagnosis), Mady Hue, Health Insurance Specialist, Division of Acute Care, CMS, 7500 Security Blvd., Baltimore, Maryland, 21244, e-mail *marilu.hue@cms.hhs.gov,* telephone 410–786–4510 (procedures).

Notice: Because of increased security requirements CMS has instituted stringent procedures for entrance into the building by non-government employees. Persons without a government I.D. will need to show an official form of picture I.D., (such as a drivers license), and sign-in at the security desk upon entering the building.

Those who wish to attend a specific ICD–9–CM C&M meeting in the CMS auditorium must submit their name and organization for addition to the meeting visitor list. Those wishing to attend the September 16–17, 2009 meeting must submit their name and organization by September 10, 2009 for inclusion on the visitor list. This visitor list will be maintained at the front desk of the CMS building and used by the guards to admit visitors to the meeting. Those who attended previous ICD–9–CM C&M meetings will no longer be automatically added to the visitor list. You must request inclusion of your name prior to each meeting you attend.

Register to attend the meeting on-line at: *http://www.cms.hhs.gov/apps/events/.* Participants attending by telephone do not need to formally register for the meeting.

Notice: This is a public meeting. However, because of fire code requirements, should the number of attendants meet the capacity of the room, the meeting will be closed.

The Director, Management Analysis and Services Office, has been delegated the authority to sign **Federal Register** notices pertaining to announcements of meetings and other committee management activities, for both CDC and the Agency for Toxic Substances and Disease Registry.

Dated: August 26, 2009.

Elaine L. Baker,

Director, Management Analysis and Services Office, Centers for Disease Control and Prevention.

[FR Doc. E9–21288 Filed 9–2–09; 8:45 am]

BILLING CODE 4160–18–P

DEPARTMENT OF HEALTH AND HUMAN SERVICES

Centers for Disease Control and Prevention

National Health and Nutrition Examination Survey (NHANES) DNA Samples: Guidelines for Proposals To Use Samples and Cost Schedule

AGENCY: Centers for Disease Control and Prevention, Department of Health and Human Services.

ACTION: Notice.

Authority: Sections 301, 306 and 308 of the Public Health Service Act (42 U.S.C. 241, 2421 and 242m).

SUMMARY: The National Health and Nutrition Examination Survey (NHANES) is a program of periodic surveys conducted by the National Center for Health Statistics (NCHS) of the Centers for Disease Control and Prevention (CDC). Examination surveys conducted since 1960 by NCHS have provided national estimates of the health and nutritional status of the U.S. civilian non-institutionalized population. To add to the extensive amount of information collected for the purpose of describing the health of the population, DNA specimens were collected during three NHANES surveys. DNA is available in the form of crude lysates of cell lines derived from approximately 7,157 participants enrolled in Phase II of NHANES III (1991–1994). In addition, DNA purified from whole blood is also available from approximately 7,900 participants enrolled in the NHANES 1999–2002 and 4,621 participants enrolled in NHANES 2007–2008. All specimens (NHANES III, NHANES 1999–2002 and NHANES 2007–2008) were sent to the Division of Laboratory Sciences (DLS) at the National Center for Environmental Health (NCEH) for processing. DNA samples from these specimens are being made available to the research community for genetic analyses.

No funding is provided as part of this solicitation. NCHS will review proposals twice a year beginning in January and July of each year. Proposals will be reviewed by a technical panel and by an internal Secondary Review Committee of senior CDC scientists. The Secondary Review Committee will perform a programmatic review based on the results of the technical review panel and consider the scientific and technical results from the first level of review, important programmatic considerations such as program priorities, program relevance, and other criteria germane to this announcement and to CDC. Projects approved by both reviews will be submitted to the NCHS Ethics Review Board for final approval.

Approved projects that do not obtain funding on their own will be canceled. A more complete description of this program follows.

DATES:

- *Submission of Proposals:* On January 1 and July 1 of each year;
- *Scientific Review:* 30 days after proposal submission date;
- *Secondary Review:* Approximately 30 days after Scientific review is complete;
- *Ethics Review Board:* Approximately 30 days after secondary review is complete;
- *Notification of approval:* Approximately 30 days after ERB approval;
- *Anticipated distribution of samples:* Approximately 60 days after all approvals are obtained.

Note: Timeframe may vary depending on the nature of the proposal and the results of each level of review. Unforeseen circumstances could result in a change to this schedule.

ADDRESSES: To send comments and for information, contact: Geraldine McQuillan, PhD, Division of Health and Nutrition Examination Surveys, National Center for Health Statistics, Centers for Disease Control and Prevention, 3311 Toledo Road, Room 4204, Hyattsville, MD 20782, Phone: 301–458–4371, Fax: 301–458–4028, E–Mail: *NHANESgenetics@cdc.gov*.

SUPPLEMENTARY INFORMATION:

The goals of NHANES are (1) to estimate the number and percentage of people in the U.S. population and designated subgroups with selected diseases and risk factors for those diseases; (2) to monitor trends in the prevalence, awareness, treatment and control of selected diseases; (3) to monitor trends in risk behaviors and environmental exposures; (4) to analyze risk factors for selected diseases; (5) to study the relation among diet, nutrition and health; (6) to explore emerging public health issues and new technologies; (7) to establish and maintain a national probability sample of baseline information on health and nutritional status.

The availability of the NHANES III DNA samples has been previously announced (Thursday, August 8, 2002 [67 FR 51585], Friday, January 13, 2006 [71 FR 22248]) and Thursday, October 18, 2007 [72 FR59094]. NHANES III DNA samples are in the form of crude cell lysates available from the cell lines derived from samples obtained from Phase II (1991–1994) participants. DNA concentrations are unknown and vary between samples (see NHANES III DNA Samples section for a description).

Beginning in 1999, NHANES became a continuous, annual survey rather than a periodic survey. For a variety of reasons, including disclosure and reliability issues, the survey data are released on public use data files every two years. In addition to the analysis of data from any two year cycle, it is possible to combine two cycles to increase sample size and analytic options. Blood samples for DNA purification were collected from participants age 20 or more years in survey years 1999–2002 and 2007–2008. Purified DNA samples are available from these survey years in a single set. DNA samples can be obtained and analyzed with survey data from the NHANES 1999–2000 or 2001–2002 or all four years combined (NHANES 1999–2002) and NHANES 2007–2008. The data release cycle for the NHANES during the period in which DNA specimens were collected is described as NHANES 1999–2000, NHANES 2001–2002 and NHANES 2007–2008. See: *http://www.cdc.gov/nchs/nhanes/nhanes99_00.htm, http://www.cdc.gov/nchs/nhanes/nhanes01–02.htm or http://www.cdc.gov/nchs/nhanes/nhanes2007–2008/nhanes07_08.htm* for additional details.

Identifiable health information collected in the NHANES is kept in strictest confidence. During the informed consent process, survey participants are assured that data collected will be used only for stated purposes and will not be disclosed or released to others without the consent of the individual in accordance with section 308(d) of the Public Health Service Act (42 U.S.C. 242m). In NHANES 1999–2002 and 2007–2008, a separate consent form was signed by eligible participants who agreed to the storing of specimens for future genetic research. Only participants that consented specifically to future genetic research in 1999–2002 and 2007–2008 will be available for analyses. Genetic variation results will be linked to the requested information from the NHANES public use data file by the Division of Health and Nutrition Examination Surveys (DHANES) staff. All analyses must be done through an NCHS Research Data Center (RDC) approved mechanism to assure confidentiality.

Research Proposals Categories: Note that the following proposal categories differ from those used in previous announcements for use of NHANES III DNA samples (Thursday, August 8,

2002 [67 FR 51585] and, Friday January 13, 2006 [71 FR 22248].

Category (A): Studies involving the typing of the complete set of NHANES DNA samples (NHANES III, 7,157 samples; NHANES 1999–2002, approximately 7,900 samples; NHANES 2007–2008 4,621 samples) for proposals that investigate specific research hypotheses that relate tests of selected genes and demographic or demographic and phenotypic data available from NHANES. This category is open for proposals for use of NHANES III, NHANES 1999–2002 and NHANES 2007–2008 samples. A total of ten full sets of samples for each survey will be available for any review cycle. The investigator will specify which DNA bank, NHANES III, NHANES 1999–2002 or 2007–2008, they are requesting as well as the genetic analyses to be conducted on the samples. The investigator will also include in the research protocol an analytic plan that includes a list of NHANES demographic and clinical variables that would be used for the data analyses. The researcher will conduct the genetic analyses of the approved variations on the samples that are labeled with a unique identification number that is not directly linkable to the public use file and therefore, anonymous to the researcher. To analyze these data with the NHANES public use data, the researcher will provide the genetic variation results with the identification numbers to the Division of Health and Nutrition Examination Surveys. The identification numbers will be matched to the requested variables from public use files data by DHANES staff for analyses that must be conducted through the NCHS RDC or its equivalent.

Proposals are limited to the testing of 1,000 genetic variations or less. NCHS cannot guarantee the publication of frequencies for all genetic variations due to confidentiality concerns.

After the NCHS has completed the initial quality control assessment, researchers will be given up to six months to conduct a more comprehensive quality assurance review. The timeframe allowed for this review will depend on the number and characteristics of the genetic tests submitted. At the completion of this review, an announcement will be made to the public announcing the availability of the genetic variation results and the opportunity to link these results to other NHANES data for secondary data analysis. The list of currently available SNPs is available at: *http://www.cdc.gov/nchs/nhanes/nh3data_genetic.htm#Available_Genetic_Data_Sets.*

All samples will be distributed in complete sets of samples of 96 well plates. NHANES III DNA is in the form of crude cell lysates. There will be a total of 7,157 NHANES III samples distributed in a total of 75 plates with an additional five plates of quality control samples. There are approximately 7,900 NHANES 1999–2002 purified DNA samples. These will be distributed into 83 plates with approximately five plates of quality control samples. There are 4,421 purified DNA samples available from NHANES 2007–2008. These will be distributed into 51 plates with approximately three plates of quality control samples.

Note: If the investigator would like to propose a subsample of the full set, please contact the Program to discuss feasibility.

Category (B): Additional research using samples already obtained from previous solicitations: Researchers that have obtained NHANES DNA samples from previous solicitations and have sufficient DNA left may request to do additional tests on the remaining DNA. Proposals under this Category must be submitted and approved before the DNA samples were scheduled to be destroyed or returned. The investigator will specify the genetic analyses to be conducted on the samples. The investigator will also include in the research protocol an analytic plan that includes a list of demographic and clinical variables that would be used for the data analyses.

Category (C): Proposals involving whole-genome genotyping of DNA samples: All proposals for whole-genome genotyping of more than 1,000 genetic variations must provide funding for the testing to the NHANES program so that the testing can be done under an NHANES contract. If funding is available, CDC intends to provide whole genome-genotyping data from NHANES III and NHANES 1999–2002 samples. These data will be available for secondary data analysis.

NHANES III DNA Samples

The laboratory will distribute aliquots of crude cell lysates. DNA concentrations vary and are estimated to range from 7.5–65 ng/μL with an average of approximately four micrograms in 100 μL. Each 96 well plate will be bar-coded and labeled with a readable identifier. Quality control samples (approximately 480 samples) will be sent at no charge, either inserted with the NHANES samples or in separate plates, as blind replicates and/or blanks. Description of these samples and cost has been previously published, see: (Friday, January 13, 2006 [71 FR 22248]).

NHANES 1999–2002 and 2007–2008 DNA Samples

The laboratory will distribute aliquots of purified DNA of normalized concentrations of 50 ng/μL whenever possible. Some samples may fall below this threshold. Forty microliters of each specimen will be supplied. The amount of DNA in each aliquot may vary but will be on average approximately two micrograms. Each 96 well plate will be bar-coded and labeled with a readable identifier. Quality control samples (NHANES 1999–2002, approximately 480 samples; NHANES 2007–2008, approximately 288 samples) will be sent at no charge, either inserted with the NHANES samples or in separate plates, as blind replicates and/or blanks.

Proposed Cost Schedule for Providing NHANES DNA Samples

Costs are determined both for NCEH and NCHS and include the physical materials needed to process the samples at the NCEH laboratory, as well as the materials to process the requests for samples at NCHS. These costs include salaries of the staff needed to conduct these activities at each Center. The fee is estimated to cover the costs of processing, handling, and preparing the samples. Technical panel travel and expenses are based on the panel meeting twice a year. The space estimate is based on acquiring storage and sample aliquoting space in the laboratory. The cost per samples for NHANES III samples is the same as published in 2006 (Friday, January 13, 2006 [71 FR 22248]) and the cost for NHANES 1999–2002 and NHANES 2007–2008 are the same as published in 2007 (Thursday, October 18, 2007 [72 FR 5904]).

Total costs	Cost per sample, full set, 99–02 & 07–08	Cost per sample, partial set, 99–02 & 07–08 (special request)	Cost per sample, full set, NHANES III	Cost per sample, partial set, NHANES III (special request)
Materials	$0.89	$2.19	$0.85	$1.90
Labor	4.60	25.30	3.30	22.00
Application review and other administrative expenses	0.54	3.09	0.35	2.69
Space	0.17	1.12	0.13	0.97
Subtotal	6.20	31.70	4.63	27.56
NCHS overhead (18 percent)	1.12	5.71	0.83	4.97
Subtotal	7.32	37.41	5.46	32.52
CDC/FMO overhead (0.9 percent)	0.66	3.37	0.49	2.93
Total Sample Cost per Sample	7.98	40.78	5.95	35.45
Total Cost per Proposal	63,024	NA	42,596.36	NA
Total Cost per Category B Proposal: for Data handling	6,302	(1)	4,260	(1)

[1] 10 percent of original cost of samples.

Procedures for Proposals: The investigator should follow these instructions for preparation of proposals. Both proposal categories need a full research proposal for review. The cover page of the research proposal should contain the title of the research project, the name, address phone number and e-mail address of the lead investigator along with the name of the institution where the DNA analysis will be done, and the category of proposal (A, B or C) submitted. Office of Human Research Protections assurance numbers for the institutions engaged in the research project should be included. CDC investigators need to include their Scientific Ethics Verification Number. E-mail submission of the proposal is encouraged.

The proposals should be a maximum of 20 single-spaced typed pages, excluding figures and tables, using ten cpi type density. Please use appendices sparingly. If a proposal is approved, the title, specific aims, name, and phone number of the author will be maintained by NCHS and released if requested by the public. Unapproved proposals will be returned to the investigator and will not be maintained by NCHS.

Since the number of sets of DNA is limited, proposals will be reviewed by the technical panel and then will be reviewed by a secondary review panel composed of CDC officials. The technical panel will determine if the proposal is technically sound and if so, the technical panel will rank the proposal on a scale of 0–100. Proposals that are rejected will not be scored. The technical panel will evaluate the whole proposal but will focus on proposal elements 1, 3, and 4.

Applications will also be reviewed by an internal Secondary Review Committee which will perform a programmatic review based on the results of the peer review for technical merit. The Secondary Review Committee considers the scientific and technical merit results from the first level of review, important programmatic considerations such as program priorities, program relevance, and other criteria germane to this announcement and to CDC. The Secondary Review Panel will be comprised of senior CDC scientists.

Proposals should include the following information:

(1) *Specific Aims:* List the broad objectives; describe concisely and realistically what the research is intended to accomplish, and state the specific hypotheses to be tested.

(2) *Background and Public Health Significance:* Describe the public health significance, scientific merit, and practical utility of the proposed research. Scientific merit will be judged on the basis of the scientific, technical, or medical significance of the research; the appropriateness and adequacy of the experimental approach; and the methodology proposed to reach the research goals. Convey how the results will be used and the relationship of the results to the data already collected in NHANES 1999–2002. Analyses should be consistent with the NHANES mission to assess the health of the nation. Because NHANES is a complex, multistage probability sample of the national population, the appropriateness of using the NHANES sample to address the goals of the proposal will be an important aspect of determining scientific merit. The Panel will ensure that the proposed project does not go beyond either the general purpose for collecting the samples in the survey, i.e., to determine allele frequencies in subgroups of the population, or, the specific stated goals of the proposal.

(3) *Research Design and Methods:* Include power calculations and a list of variables requested. For all proposal categories, include a detailed description of the laboratory methods. The characteristics of the laboratory assay, such as reliability, validity, should be included with appropriate references. The potential difficulties and limitations of the proposed procedures should also be discussed. Category A proposals will be provided with approximately 480 quality control samples at no additional cost. Approved projects must run these quality control samples and submit the results from the NHANES DNA samples. Category B proposals will be required to use residual quality control samples. The proposal should contain a discussion of additional quality control procedures the laboratory will use to assure the validity of the test results. Address adequate methods planned for handling and storage of samples.

(4) *Discussion Regarding the Race/Ethnicity Variables:* If the research is limited to specific race or ethnic groups (only applicable for a subsample request) or if information about the race or ethnicity of the subjects is requested, indicate the reason for analyzing race/ethnicity and how the results will be interpreted. Discuss the potential for group harm.

(5) *Clinical Relevance of Research Findings:* The samples for research based on specific hypothesis are available for genetic research, not genetic testing. Therefore, it is the intent of the program to approve only those proposals that would yield meaningful research, but not clinically relevant information for the participants. Researchers should justify that the test

results should not be reported to the subjects.

(6) *Qualifications:* Provide a brief description of the requestor's expertise in the proposed area, including publications in this area within the last three years.

(7) *Period of Performance:* Specify the project period. The period may be up to three years. At the end of the project period, any unused samples must be returned to the NHANES DNA Specimen Bank in accordance with instructions from the Division of Environmental Laboratory Science. Extensions to the period of performance may be requested.

(8) *Funding:* Include the source and status of the funding to perform the requested laboratory analysis. Investigators will be responsible for the cost of processing and shipping the samples. Currently the cost per DNA specimen is $7.98 for NHANES 1999–2002 and 2007–2008 proposals that use the full set of samples. Costs for partial sets are $40.78 per specimen. Reimbursement for the samples will be collected before the samples are released. NHANES III samples which are DNA crude lysates, not purified DNA, are $5.95 per sample for the 7,157 total set of samples. If a subsample of NHANES III is requested and approved the cost schedule published in (Friday, January 13, 2006 [71 FR 22248]) will be utilized ($35.45 per sample).

Public Availability of Data

Genetic test results from all studies using NHANES DNA samples will be made available to the public for secondary data analyses. After the NCHS quality control review is completed, researchers will be given up to six months to conduct a more comprehensive quality assurance review. The final quality control review timeframe will be negotiated between the researcher and the NCHS Project Officer and will depend on the number and characteristics of the genetic tests submitted. This time for final review is provided before the announcement is made to the public that the test results are available for submission of proposals for secondary data analyses. The list of currently available genotypes will be outlined on: *http://www.cdc.gov/nchs/nhanes/nh3data_genetic.htm#Available_Genetic_Data_Sets*.

Proposals for secondary data analyses linking NHANES public use data with genetic variation data are accepted in May and October of each year.

Proposals to obtain DNA for testing will be reviewed first by a Genetics Technical Panel and then by a Secondary Review Panel. Approved proposal will then be reviewed by the CDC/NCHS Ethics Review Board (ERB) to ensure appropriate human subjects protections are provided, in compliance with 45 CFR part 46. The ERB review will be conducted, even though investigators' proposals may have received review by their home institution. The Director of NCHS will verify that projects have received appropriate reviews.

Requirements for the Inclusion of Women and Racial and Ethnic Minorities in Research: In NHANES III and NHANES 1999–2002, race/ethnicity was derived by combining responses to questions on race and Hispanic origin. These categories are defined as non-Hispanic white, non-Hispanic black, or Mexican American. Individuals who did not self-select into these categories were classified as ''other''. If proposal requests a subsample and excludes one or more race/ethnic groups or a gender, this exclusion must be justified.

CDC is also sensitive to the stigmatization of racial/ethnic specific populations through inappropriate reporting and interpretation of findings. For all proposals that request information on race/ethnicity for the samples selected, the investigator should discuss the reason for analyzing race/ethnicity, how the results will be interpreted, and the potential for group harm.

Submission of Proposals: Proposals can be submitted immediately. The review process will begin approximately 60 days from the publication of the notice and will include all proposals submitted as of that date, Electronic submission of proposals is encouraged. Please submit proposals to: Geraldine McQuillan, PhD, Division of Health and Nutrition Examination Surveys, National Center for Health Statistics, Centers for Disease Control and Prevention, 3311 Toledo Road, Room 4204, Hyattsville, MD 20782, Phone: 301–458–4840, Fax: 301–458–4028, E–mail: *NHANESgenetics@cdc.gov*.

Approved Proposals: The genetic results will be sent back to NCHS so they can be linked to the requested NHANES III, NHANES 1999–2002 or NHANES 2007–2008 public use data. Analysis will be done in the Research Data Center.

Agency Agreement: A formal signed agreement in the form of a Materials Transfer Agreement (MTA) with individuals who have projects approved will be completed before the release of the samples. This agreement will contain the conditions for use of the DNA as stated in this document and as agreed upon by the investigators and CDC. A key component of this agreement is that no attempt will be made to link the results of the proposed research to any other data, including, but not limited to, the NHANES public use data sets outside the Research Data Center. Also, the investigator agrees that the samples cannot be used for commercial purposes. A list of genes generated from the testing of the NHANES samples will be made available to the public for potential solicitation of proposals for secondary data analysis after the quality control process has been completed (approximately six months after NCHS receives the genetic variation results). These secondary data analysis proposals must also be reviewed by the ERB.

Progress Reports: A progress report will be submitted annually. CDC/NCHS/ERB continuation reports are also required annually if testing is not completed within a year. An ERB continuation form will be sent to the researcher each year for project update.

Termination of ERB Protocol: At the end of laboratory testing the Ethics Review Board Protocol will be closed. All data analysis will be conducted through the NCHS Research Data Center (RDC). An analytic plan must be submitted to the RDC to set up the analytic data set. See: *http://www.cdc.gov/nchs/r&d/rdc.htm* for guidelines.

Disposition of Results and Samples: No DNA samples provided can be used for any purpose other than those specifically requested in the proposal and approved by the Genetics Technical Panel, the Secondary Review Committee and the NHANES ERB. No sample can be shared with others, including other investigators, unless specified in the proposal and so approved. Any unused samples must be returned upon completion of the approved project. These results once returned to NCHS and quality controlled, will be part of the public domain. Genetic test results from all studies using NHANES DNA samples will be made available to the public for secondary data analyses. After the NCHS quality control review is completed, researchers will be given up to six months to conduct a more comprehensive quality assurance review. The final quality control review timeframe will be negotiated between the researcher and the NCHS Project Officer and will depend on the number and characteristics of the genetic tests submitted. Data analyses will be conducted at the NCHS' Research Data Center or similar environment provided by NCHS. Proposals for secondary data analyses are accepted in May and October of each year (*http://*

www.cdc.gov/nchs/nhanes/nh3data_genetic.htm).

Send Requests for Information: Geraldine McQuillan, PhD, Division of Health and Nutrition Examination Surveys, National Center for Health Statistics, Centers for Disease Control and Prevention, 3311 Toledo Road, Room 4204, Hyattsville, MD 20782, Phone: 301–458–4371, Fax: 301–458–4028, E–mail: *NHANESgenetics@cdc.gov*.

Dated: August 27, 2009.

Tanja Popovic,

Chief Science Officer, Centers for Disease Contro and Prevention.

[FR Doc. E9–21287 Filed 9–2–09; 8:45 am]

BILLING CODE 4163–18–P

DEPARTMENT OF HOMELAND SECURITY

U.S. Citizenship and Immigration Services

Agency Information Collection Activities: Form N–400, Revision of an Existing Information Collection; Comment Request

ACTION: 60-Day Notice of Information Collection Under Review; Form N–400, Application for Naturalization; OMB Control No. 1615–0052.

The Department of Homeland Security, U.S. Citizenship and Immigration Services has submitted the following information collection request for review and clearance in accordance with the Paperwork Reduction Act of 1995. The information collection is published to obtain comments from the public and affected agencies. Comments are encouraged and will be accepted for sixty days until November 2, 2009.

Written comments and/or suggestions regarding the item(s) contained in this notice, especially regarding the estimated public burden and associated response time, should be directed to the Department of Homeland Security (DHS), USCIS, Chief, Regulatory Products Division, Clearance Officer, 111 Massachusetts Avenue, Suite 3008, Washington, DC 20529–2210. Comments may also be submitted to DHS via facsimile to 202–272–8352 or via e-mail at *rfs.regs@dhs.gov.* When submitting comments by e-mail, please make sure to add OMB Control No. 1615–0052 in the subject box.

Written comments and suggestions from the public and affected agencies concerning the collection of information should address one or more of the following four points:

(1) Evaluate whether the proposed collection of information is necessary for the proper performance of the functions of the agency, including whether the information will have practical utility;

(2) Evaluate the accuracy of the agencies estimate of the burden of the proposed collection of information, including the validity of the methodology and assumptions used;

(3) Enhance the quality, utility, and clarity of the information to be collected; and

(4) Minimize the burden of the collection of information on those who are to respond including through the use of appropriate automated, electronic, mechanical, or other technological collection techniques or other forms of information technology, e.g., permitting electronic submission of responses.

Overview of This Information Collection

(1) Type of Information Collection: Revision of an existing information collection.

(2) Title of the Form/Collection: Application for Naturalization.

(3) Agency form number, if any, and the applicable component of the Department of Homeland Security sponsoring the collection: Form N–400; U.S. Citizenship and Immigration Services.

(4) Affected public who will be asked or required to respond, as well as a brief abstract: Primary: Individuals or households. USCIS uses the information on this form to determine an applicant's eligibility for naturalization.

(5) An estimate of the total number of respondents and the amount of time estimated for an average respondent to respond: 700,000 responses at 6 hours and 8 minutes (6.13 hours) per response.

(6) An estimate of the total public burden (in hours) associated with the collection: 4,291,000 annual burden hours.

If you need a copy of the information collection instrument, please visit: *http://www.regulations.gov/search/Regs/home.html#home.*

We may also be contacted at: USCIS, Regulatory Products Division, 111 Massachusetts Avenue, NW., Suite 3008, Washington, DC 20529–2210, telephone number 202–272–8377.

Dated: August 27, 2009.

Stephen Tarragon,

Deputy Chief, Regulatory Products Division, U.S. Citizenship and Immigration Services, Department of Homeland Security.

[FR Doc. E9–21260 Filed 9–2–09; 8:45 am]

BILLING CODE 9111–97–P

DEPARTMENT OF HOMELAND SECURITY

United States Coast Guard

[Docket No. USCG–2009–0761]

Cook Inlet Regional Citizen's Advisory Committee; Charter Renewal

AGENCY: Coast Guard, DHS.

ACTION: Notice of Recertification.

SUMMARY: The Coast Guard has recertified the Cook Inlet Regional Citizen's Advisory Council for the period covering September 1, 2009, through August 31, 2010. Under the Oil Terminal and Oil Tanker Environmental Oversight Act of 1990, the Coast Guard may certify on an annual basis an alternative voluntary advisory group in lieu of a regional citizens' advisory council for Cook Inlet, Alaska. This advisory group monitors the activities of terminal facilities and crude oil tankers under the Cook Inlet Program established by the statute.

DATES: The Cook Inlet Regional Citizen's Advisory Council is certified through August 31, 2010.

ADDRESSES: You may request a copy of the recertification letter by writing to Commander, Seventeenth Coast Guard District (dpi), P.O. Box 25517, Juneau, AK 99802–5517; or by calling 907–463–2821.

FOR FURTHER INFORMATION CONTACT: Lieutenant-Commander Ken Phillips, Seventeenth Coast Guard District (dpi), telephone 907–463–2821.

SUPPLEMENTARY INFORMATION:

Background and Purpose

On September 1, 2008, the Coast Guard recertified the Cook Inlet Regional Citizen's Advisory Council through August 31, 2009 (73 FR 57127). Under the Oil Terminal and Oil Tanker Environmental Oversight Act of 1990 (33 U.S.C. 2732), the Coast Guard may certify, on an annual basis, an alternative voluntary advisory group in lieu of a regional citizens' advisory council for Cook Inlet, Alaska. This advisory group monitors the activities of terminal facilities and crude oil tankers under the Cook Inlet Program established by Congress, 33 U.S.C. 2732 (b).

On September 16, 2002, the Coast Guard published a notice of policy on revised recertification procedures for alternative voluntary advisory groups in lieu of councils at Cook Inlet, Alaska (67 FR 58440). This revised policy indicated that Cook Inlet Regional Citizen's Advisory Council recertification in 2009 need only submit a streamlined

application and public comments would not be solicited prior to that recertification.

Dated: August 14, 2009.

Christopher C. Colvin,

Rear Admiral, U.S. Coast Guard, Commander, Seventeenth Coast Guard District.

[FR Doc. E9–21262 Filed 9–2–09; 8:45 am]

BILLING CODE 4910–15–P

DEPARTMENT OF THE INTERIOR

Fish and Wildlife Service

[FWS–R2–ES–2009–N138; 20124–1113–0000–C2]

Endangered and Threatened Wildlife and Plants; Apache Trout (Oncorhynchus apache) Recovery Plan, Second Revision

AGENCY: Fish and Wildlife Service, Interior.

ACTION: Notice of document availability: Revised recovery plan.

SUMMARY: We, the U.S. Fish and Wildlife Service (Service), announce the availability of the Apache Trout (*Oncorhynchus apache*) Recovery Plan, Second Revision. This species is one of two salmonid species native to Arizona and is currently listed as threatened. It was originally listed as endangered in 1967, but reclassified to threatened in 1975.

ADDRESSES: An electronic copy of the recovery plan can be obtained from our Web site at *http://www.fws.gov/southwest/es/Library/*. Copies of the recovery plan are also available by request. To obtain a copy, contact Jeremy Voeltz by U.S. mail at U.S. Fish and Wildlife Service, Arizona Fish and Wildlife Conservation Office, P.O. Box 39, Pinetop, AZ 85935; by phone at (928) 338–4288 extension 23; or by e-mail at *Jeremy_Voeltz@fws.gov*.

FOR FURTHER INFORMATION CONTACT: Jeremy Voeltz (see **ADDRESSES**).

SUPPLEMENTARY INFORMATION:

Background

The Endangered Species Act of 1973 (Act), as amended (16 U.S.C. 1531 *et seq.*), requires the development of recovery plans for listed species, unless such a plan would not promote the conservation of a particular species. Recovery plans help guide the recovery effort by describing actions considered necessary for the conservation of the species, and estimating time and costs for implementing the measures needed for recovery. A recovery plan was originally completed for Apache trout in 1979 and updated in 1983, but the recommendations contained in those plans are outdated given the species' current status.

Section 4(f) of the Act requires that we provide public notice and an opportunity for public review and comment during recovery plan development. In fulfillment of this requirement, we made the draft second revision of the recovery plan for Apache trout available for public comment from July 27, 2007, through September 25, 2007 (72 FR 41350). We also conducted peer review at this time. Based on this input, we revised and finalized the recovery plan, and summarized public comments in an appendix.

Apache trout (*Oncorhynchus apache*) was formerly described as *Salmo apache* with the common name Arizona trout, but changed after the American Fisheries Society Names Committee showed that the relationship between the cutthroat and rainbow series of trout (including Apache trout) lie with *Oncorhynchus* rather than *Salmo.* Apache trout is one of two salmonid species native to Arizona (the other is Gila trout, *Oncorhynchus gilae*), and is currently listed as threatened (July 16, 1975, 40 FR 29863). Although originally listed as endangered (March 11, 1967, 32 FR 4001), the species was downlisted in 1975 after a reanalysis of its status successful culturing in captivity and greater knowledge of existing populations. Its reclassification to threatened status included a 4(d) rule under the Act, allowing the Arizona Department of Game and Fish to regulate take of the species and to establish sportfishing opportunities (July 16, 1975, 40 FR 29863).

Historically, Apache trout occupied streams and rivers in the upper White, Black, and Little Colorado River drainages in the White Mountains of east-central Arizona. Currently, 28 pure Apache trout populations exist within historical range in Gila, Apache, and Greenlee Counties of Arizona, on lands of the Fort Apache Indian Reservation and Apache-Sitgreaves National Forest.

Watershed alterations related primarily to forestry, livestock grazing, reservoir construction, agriculture, road construction, and mining were identified as causes for reduction of Apache trout habitat. Such alterations damage riparian vegetation and streambank morphology and stability, which increases stream erosion and can ultimately result in higher sediment loads. These effects increase susceptibility to habitat damage from floods, decrease quality and quantity of spawning and rearing areas, alter stream flow volume and temperatures, and alter stream productivity and food supply (e.g., stream dwelling insects). In addition, introductions of non-native trout (i.e., brook and brown trout) have led to competition for resources and predation, or hybridization with rainbow trout or cutthroat trout. Collectively, these factors have varied in intensity, complexity, and damage depending on location, ultimately reducing the total occupied range and the ability of Apache trout to effectively persist at all life stages.

Actions needed to recover the Apache trout include completing required regulatory compliance for stream improvements and fish stocking, implementing appropriate State and tribal fishing regulations, maintaining existing fish barriers, enhancing habitat, removing or minimizing undesirable fishes using piscicides or other feasible means, maintaining existing self-sustaining populations of pure Apache trout, establishing new self-sustaining populations, and monitoring all populations.

The recovery plan provides delisting criteria for the species that will indicate that the species is no longer threatened with extinction throughout all or a significant portion of its range. Apache trout should be considered for removal from the List of Threatened and Endangered Species (delisting) when all of the following criteria have been met:

(1) Habitat sufficient to provide for all life functions at all life stages of 30 self-sustaining discrete populations of pure Apache trout has been established and protected through plans and agreements with responsible land and resource management entities. These plans will address current and future threats to Apache trout habitat.

(2) Thirty discrete populations of pure Apache trout have been established and determined to be self-sustaining. A population will be considered self-sustaining by the presence of multiple age classes and evidence of periodic natural reproduction. A population will be considered established when it is capable of persisting under the range of variation in habitat conditions that occur in the restoration stream.

(3) Appropriate angling regulations are in place to protect Apache trout populations while complying with Federal, State, and tribal regulatory processes.

(4) Agreements are in place with the Service, Arizona Game and Fish Department, and White Mountain Apache Tribe to monitor, prevent, and control disease and/or causative agents, parasites, and pathogens that may threaten Apache trout.

Authority: The authority for this action is section 4(f) of the Endangered Species Act, 16 U.S.C. 1533(f).

Dated: June 30, 2009.

Benjamin N. Tuggle,

Regional Director, Region 2.

[FR Doc. E9–21292 Filed 9–2–09; 8:45 am]

BILLING CODE 4310–55–P

DEPARTMENT OF THE INTERIOR

National Park Service

National Register of Historic Places; Weekly Listing of Historic Properties

Pursuant to (36 CFR 60.13(b,c)) and (36 CFR 63.5), this notice, through publication of the information included herein, is to apprise the public as well as governmental agencies, associations and all other organizations and individuals interested in historic preservation, of the properties added to, or determined eligible for listing in, the National Register of Historic Places from June 29, to July 2, 2009.

For further information, please contact Edson Beall via: United States Postal Service mail, at the National Register of Historic Places, 2280, National Park Service, 1849 C St., NW., Washington, DC 20240; in person (by appointment), 1201 Eye St., NW., 8th floor, Washington, DC 20005; by fax, 202–371–2229; by phone, 202–354–2255; or by e-mail, *Edson_Beall@nps.gov.*

Dated: August 25, 2009.

J. Paul Loether,

Chief, National Register of Historic Places/National Historic Landmarks Program.

KEY: State, County, Property Name, Address/Boundary, City, Vicinity, Reference Number, Action, Date, Multiple Name

CONNECTICUT

Fairfield County

Restmore, 375 Warner Hill Rd., Fairfield, 09000467, Listed, 7/01/09

Hartford County

Case Brothers Historic District, 680–728 Spring St., 40 Glen Rd., and rough boundaries of Case Mountain Recreation Area and Manchester Land, Manchester, 09000468, Listed, 6/30/09

FLORIDA

Lake County

Laroe Family Homestead Historic District, 3430 W. Co. Rd. 44 & 2891 E. Orange Ave., Eustis vicinity, 09000493, Listed, 6/29/09

KENTUCKY

Pulaski County

Battle of Mill Springs Historic Areas (Boundary Increase), Four discontiguous areas; two along KY 235 and two along the Cumberland River, Nancy vicinity, 08001121, Listed, 6/29/09

MASSACHUSETTS

Berkshire County

West Stockbridge Town Hall, 9 Main St., West Stockbridge, 09000469, Listed, 7/01/09

Hampshire County

Gate Cemetery, Ireland St., Chesterfield, 09000470, Listed, 7/01/09

Ireland Street Cemetery, Ireland St., Chesterfield, 09000471, Listed, 7/01/09

MICHIGAN

Berrien County

Zinc Collar Pad Company Building, 304 S. Oak St., Buchanan, 09000472, Listed, 7/01/09

Houghton County

Chassell School Complex, 42373, 42365 N. Hancock St., Chassell, 09000473, Listed, 7/01/09

Otsego County

Johannesburg Manufacturing Company Store, 10816 M–32 E., Johannesburg, 09000475, Listed, 7/01/09

St. Joseph County

Clapp, Leverett A. and Amanda (Hampson), House, 324 W. Main St., Centreville, 09000476, Listed, 7/01/09

MISSOURI

Cole County

Munichburg Commercial Historic District, 114–130 (even only) E. Dunklin St., 610, 620 Madison St., 704 Madison St., Jefferson City, 09000477, Listed, 7/01/09 (Southside Munichburg, Missouri MPS)

NEW YORK

Columbia County

St. John's Lutheran Church, 1273 Co. Rte. 7, Ancram vicinity, 09000480, Listed, 6/30/09

Washington County

Stoops Hotel, 2839 NY 29, Battenville, 09000481, Listed, 6/30/09

NORTH CAROLINA

Guilford County

Foust-Carpenter and Dean Dick Farms, E. and W. sides of Mt. Hope Church Rd., N. and S. sides of Carpenter House Rd., Whitsett vicinity, 09000504, Listed, 7/01/09

SOUTH CAROLINA

Chester County

Lando School, Schoolhouse Rd., Lando, 09000485, Listed, 7/01/09

Greenville County

Campbell's Covered Bridge, 123 Campbell Covered Bridge Rd., Gowensville vicinity, 09000483, Listed, 7/01/09

Hampton County

Lawton, John, House, 118 3rd. St., Estill, 09000484, Listed, 7/01/09

TEXAS

Cameron County

Hicks-Gregg House, 1249 W. Washington St., Brownsville, 09000486, Listed, 7/01/09

WASHINGTON

Pierce County

Washington Building, 1019 Pacific Ave., Tacoma, 09000508, Listed, 6/29/09

WISCONSIN

Columbia County

Griswold, George, House, 146 S. Dickason Blvd., Columbus, 09000487, Listed, 7/01/09

Columbia County

Ingalsbe, Adolphus and Sarah, House, 546 Park Ave., Columbus, 09000488, Listed, 7/01/09

[FR Doc. E9–21228 Filed 9–2–09; 8:45 am]

BILLING CODE P

DEPARTMENT OF THE INTERIOR

National Park Service

National Register of Historic Places; Notification of Pending Nominations and Related Actions

Nominations for the following properties being considered for listing or related actions in the National Register were received by the National Park Service before August 15, 2008. Pursuant to § 60.13 of 36 CFR part 60 written comments concerning the significance of these properties under the National Register criteria for evaluation may be forwarded by United States Postal Service, to the National Register of Historic Places, National Park Service, 1849 C St., NW., 2280, Washington, DC 20240; by all other carriers, National Register of Historic Places, National Park Service, 1201 Eye St., NW., 8th floor, Washington, DC 20005; or by fax, 202–371–6447. Written or faxed comments should be submitted by September 18, 2009.

J. Paul Loether,

Chief, National Register of Historic Places/National Historic Landmarks Program.

ALABAMA

Elmore County

Tallassee Mills, 1844 Old Mill Rd., Tallassee, 09000734

ARKANSAS

Crawford County

Old School Presbyterian Church, 421 Webster St., Van Buren, 09000740

Lonoke County

Carver Gymnasium, 400 Ferguson St., Lonoke, 09000741

Nevada County

Emmet Methodist Church, 209 S. Walnut, Emmet, 09000742

Poinsett County

Harrisburg Commercial Historic District, Roughly bounded by Jackson, Water, South & Gould Sts., Harrisburg, 09000736

Lepanto Commercial Historic District, Roughly bounded by Holmes St., Little R., Dewey St. & Alexander Ave., Lepanto, 09000743

Marked Tree Commercial Historic District, Elm St. between Liberty & Frisco Sts.; Frisco St. between Elm and Nathan Sts., Marked Tree, 09000735

Pope County

Atkins Commercial Historic District, Roughly bounded by Main, Church, & 1st Sts., Ave. 2., Atkins, 09000739

Prairie County

St. Elizabeth's Catholic Church, NE corner of Sycamore and Mason Sts., DeValls Bluff, 09000744

Pulaski County

Bailey, Carl, Company Building, 3100 E. Broadway, North Little Rock, 09000737

Sebastian County

Old US 71—Jenny Lind Segment, (Arkansas Highway History and Architecture MPS) Doraul Acres Ln. & part of Mt. Nebo Rd. W. of US 71., Jenny Lind, 09000738

Washington County

University of Arkansas Campus Historic District, Roughly bounded by Garland Ave., Maple St., Arkansas Ave. & Dickson St., Fayetteville, 09000745

FLORIDA

Orange County

Holden—Parramore Historic District, Bounded by W. Church St., S. Division Ave., Long St., McFall Ave., & S. Parramore Av., Orlando, 09000746

Pinellas County

Blatchley, Willis S., House, 232 Lee St., Dunedin, 09000747

GEORGIA

Clarke County

Milledge Avenue Historic District (Boundary Increase), 295 W. Rutherford St., Athens, 09000748

DeKalb County

Kirkwood Historic District, Roughly bounded by Memorial Dr., Montgomery St., Hosea Williams Dr., Rogers St., CSX RR., & city limits, Atlanta, 09000749

Elbert County

Building at 6 and 7 Public Square, 6 & 7 Public Sq., Bowman, 09000750

Murray County

Pleasant Valley Historic District, Roughly bounded by CSX RR., city limits, & land lot lines., Crandall, 09000751

Webster County

Boyd Mill Place, 580 Mill Pond Rd., Weston, 09000752

HAWAII

Honolulu County

Uluhaimalama, 352 Auwaiolimu St., Honolulu, 09000753

INDIANA

Boone County

Howard School, (Indiana's Public Common and High Schools MPS) 4555 E. Co. Rd. 750 S., Brownsburg, 09000754

Elkhart County

Bridge Street Bridge, Bridge St. aver St. Joseph R., Elkhart, 09000755

Grant County

Thompson—Ray House, 407 E. Main St., Gas City, 09000756

Kosciusko County

DIXIE (sternwheeler), 400 Blk. of S. Dixie Dr., North Webster, 09000757

La Porte County

Pinhook Methodist Church and Cemetery, 8001 IN 2, LaPorte, 09000759

Lake County

Morningside Historic District, (Historic Residential Suburbs in the United States, 1830–1960 MPS) Roughly bounded by E. side of Washington, W. side of Jefferson, 47th & 48th Sts., Gary, 09000758

Madison County

Thawley, Joseph & Lucinda, House, 300 E. North Main St., Summitville, 09000760

Orange County

Orleans Historic District, Roughly bounded by Wilson, Franklin, Harrison & 4th Sts., Orleans, 09000761

Ripley County

Ripley County Courthouse, 115 N. Main St., Versailles, 09000762

IOWA

Clayton County

Bloedel, Christian, Wagon Works, 524–526 Main St., McGregor, 09000765

Scott County

Linograph Company Building, The, 420 W. River Dr., Davenport, 09000764

MASSACHUSETTS

Middlesex County

Franklin School, 7 Stedman Rd., Lexington, 09000766

Suffolk County

Mount Hope Cemetery, 355 Walk Hill St., Boston, 09000767

MISSISSIPPI

Coahoma County

Clarksdale Historic District, Roughly bounded by the Sunflower R., 10th St., DeSoto Ave. & Clark St., Clarksdale, 09000763

OREGON

Clackamas County

Willamette Falls Neighborhood Historic District, Roughly bound by Knapps Alley, 12th St., 4th Ave., & 15th St., West Linn, 09000768

PUERTO RICO

Ponce Municipality

Casa Paoli, 14 Mayor St., Ponce, 09000769

[FR Doc. E9–21229 Filed 9–2–09; 8:45 am]

BILLING CODE P

LEGAL SERVICES CORPORATION

Sunshine Act Meetings of the Board of Directors

Time and Date: The Legal Services Corporation (''LSC'') Board of Directors will meet by telephone on September 8, 2009 commencing at 2 p.m., Eastern Daylight Savings Time.

PUBLIC OBSERVATION: Members of the public who wish to listen to the meeting live may do so by joining members of the LSC staff who will be calling in from the 3rd Floor Conference Center of the offices of the Legal Services Corporation or by following the telephone call-in directions given below. Members of the public who call in to listen to the meeting are asked to keep their telephones muted to eliminate background noises. Comments from the public may from time-to-time be solicited by the Chairman.

CALL-IN DIRECTIONS:

- Call toll-free number 1–(866) 266–3378;
- When prompted, enter the following Conference ID Number: 2022951503 followed by the ''#'' sign;
- When prompted, enter the following Pass Code: 5321 followed by the ''#'' sign; and
- When connected to the call, please ''Mute'' your telephone immediately.

LOCATION: Legal Services Corporation, 3rd Floor Conference Center, 3333 K Street, NW., Washington, DC.

STATUS OF MEETING: Open.

MATTERS TO BE CONSIDERED:

Board of Directors

Agenda

Open Session

1. Approval of agenda.
2. Consider and act on adoption of LSC's 2009 Justice Gap Report.
3. Consider and act on whether: (a) To establish a *Search Committee for LSC President* and, if such committee is established, then (b) to authorize the Chairman of the Board to appoint the membership of the committee and (c) to

authorize the committee to issue a *Request for Proposals* soliciting bids in accordance with LSC's *Administrative Manual* for a search firm to aid in the search for the next president of LSC.

4. Consider and act on whether to authorize closing a portion of the Board's Finance Committee meeting of September 21, 2009, for a briefing by legal counsel and possible deliberation and action by the Committee on an internal budgeting issue.

5. Consider and act on other business.

6. Consider and act on adjournment of meeting.

CONTACT PERSON FOR INFORMATION: Katherine Ward, Executive Assistant to the Vice President & General Counsel, at (202) 295–1500.

SPECIAL NEEDS: Upon request, meeting notices will be made available in alternate formats to accommodate visual and hearing impairments. Individuals who have a disability and need an accommodation to listen to the meeting may notify Katherine Ward at (202) 295–1500 or *kward@lsc.gov*.

Dated: September 1, 2009.

Victor M. Fortuno,

Vice President & General Counsel.

[FR Doc. E9–21391 Filed 9–1–09; 4:15 pm]

BILLING CODE 7050–01–P

NATIONAL AERONAUTICS AND SPACE ADMINISTRATION

Notice of Information Collection

AGENCY: National Aeronautics and Space Administration (NASA).

Notice: (09–077).

ACTION: Notice of information collection.

SUMMARY: The National Aeronautics and Space Administration, as part of its continuing effort to reduce paperwork and respondent burden, invites the general public and other Federal agencies to take this opportunity to comment on proposed and/or continuing information collections, as required by the Paperwork Reduction Act of 1995 (Pub. L. 104–13, 44 U.S.C. 3506(c)(2)(A)).

DATES: All comments should be submitted within 60 days from the date of this publication.

ADDRESSES: All comments should be addressed to Lori Parker, National Aeronautics and Space Administration, Washington, DC 20546–0001.

FOR FURTHER INFORMATION CONTACT: Requests for additional information or copies of the information collection instrument(s) and instructions should be directed to Lori Parker, NASA Clearance Officer, NASA Headquarters, 300 E Street SW., JF0000, Washington, DC 20546, (202) 358–1351, *Lori.Parker-1@nasa.gov*.

SUPPLEMENTARY INFORMATION:

I. Abstract

The NASA Office of Education seeks a generic clearance to administer surveys through the Office of Education Performance Measurement (OEPM) system. Data Collection through the OEPM system will be used for reporting on Program Assessment Rating Tool (PART) measures, Program Analysis and Evaluation (PA&E), and answering Congressional inquiries about NASA education programs.

II. Method of Collection

Data collected will be primarily electronic. Teachers, students, and interested members of public who have attended or participated in NASA funded education events and activities will be sent an email with a link that, when clicked, will route the participant to the relevant survey.

At events where computers might not be available, a paper version of a select number of surveys will be available. Surveys will be scanned into the OEPM system through a fax machine or scanner.

III. Data

Title: NASA Office of Education Generic Collection.

OMB Number: 2700–XXXX.

Type of review: New Collection.

Affected Public: Individuals or households.

Estimated Number of Respondents: 400,000.

Estimated Number of Responses per Respondent: 1.

Estimated Time per Response: .25–.50 hour.

Estimated Total Annual Burden Hours: 103,458 hours.

Estimated Annual Cost for Respondents: $0.00.

IV. Request for Comments

Comments are invited on: (1) Whether the proposed collection of information is necessary for the proper performance of the functions of NASA, including whether the information collected has practical utility; (2) the accuracy of NASA's estimate of the burden (including hours and cost) of the proposed collection of information; (3) ways to enhance the quality, utility, and clarity of the information to be collected; and (4) ways to minimize the burden of the collection of information on respondents, including automated collection techniques or the use of other forms of information technology.

Comments submitted in response to this notice will be summarized and included in the request for OMB approval of this information collection. They will also become a matter of public record.

Lori Parker,

NASA Clearance Officer.

[FR Doc. E9–21270 Filed 9–2–09; 8:45 am]

BILLING CODE 7510–13–P

NATIONAL AERONAUTICS AND SPACE ADMINISTRATION

[Notice (09–076)]

NASA Advisory Council; Science Committee; Heliophysics Subcommittee; Meeting

AGENCY: National Aeronautics and Space Administration.

ACTION: Notice of meeting.

SUMMARY: The National Aeronautics and Space Administration (NASA) announces a meeting of the Heliophysics Subcommittee of the NASA Advisory Council (NAC). This Subcommittee reports to the Science Committee of the NAC. The Meeting will be held for the purpose of soliciting from the scientific community and other persons scientific and technical information relevant to program planning.

DATES: Wednesday, September 30, 2009, 9 a.m. to 5 p.m.; Thursday, October 1, 2009, 8:30 a.m. to 5 p.m.; and Friday, October 2, 2009, 8:30 a.m. to 12 p.m.

ADDRESSES: NASA Headquarters, 300 E Street, SW., Room 3H46, Washington, DC 20546.

FOR FURTHER INFORMATION CONTACT: Ms. Marian Norris, Science Mission Directorate, NASA Headquarters, Washington, DC 20546, (202) 358–4452, fax (202) 358–4118, or *mnorris@nasa.gov.*

SUPPLEMENTARY INFORMATION: The meeting will be open to the public up to the capacity of the room. The agenda for the meeting includes the following topics:

—Heliophysics Division Overview and Program Status.

—Discussion of Decadal Survey Assessment and NASA Response.

—Update on Interagency Planning for Space Weather Monitor at the L1 Libration Point. It is imperative that the meeting be held on these dates to accommodate the scheduling priorities of the key participants. Attendees will be requested to sign a register and to comply with NASA security requirements, including the

presentation of a valid picture ID, before receiving an access badge. Foreign nationals attending this meeting will be required to provide a copy of their passport, visa, or green card in addition to providing the following information no less than 7 working days prior to the meeting: Full name; gender; date/place of birth; citizenship; visa/green card information (number, type, expiration date); passport information (number, country, expiration date); employer/affiliation information (name of institution, address, country, telephone); title/position of attendee. To expedite admittance, attendees with U.S. citizenship can provide identifying information 3 working days in advance by contacting Marian Norris via e-mail at mnorris@nasa.gov or by telephone at (202) 358–4452.

Dated August 29, 2009.

P. Diane Rausch,

Advisory Committee Management Officer, National Aeronautics and Space Administration.

[FR Doc. E9–21271 Filed 9–2–09; 8:45 am]

BILLING CODE 7510–13–P

NUCLEAR REGULATORY COMMISSION

[Docket No. NRC–2009–0150]

Agency Information Collection Activities: Submission for the Office of Management and Budget (OMB) Review; Comment Request

AGENCY: U.S. Nuclear Regulatory Commission (NRC).

ACTION: Notice of the OMB review of information collection and solicitation of public comment.

SUMMARY: The NRC invites public comment about our intention to request the OMB's approval for renewal of an existing information collection that is summarized below. We are required to publish this notice in the **Federal Register** under the provisions of the Paperwork Reduction Act of 1995 (44 U.S.C. Chapter 35).

Information pertaining to the requirement to be submitted:

1. *Type of submission, new, revision, or extension:* Extension.

2. *The title of the information collection:* 10 CFR part 60, ''Disposal of High-Level Radioactive Wastes in Geologic Repositories.''

3. *Current OMB approval number:* 3150–0127.

4. *The form number if applicable:* N/A.

5. *How often the collection is required:* The information need only be submitted one time.

6. *Who will be required or asked to report:* State or Indian Tribes, or their representatives, requesting consultation with the NRC staff regarding review of a potential high-level radioactive waste geologic repository site, or wishing to participate in a license application review for a potential geologic repository (other than a potential geologic repository site at Yucca Mountain, Nevada, currently under investigation by the U.S. Department of Energy, which is now regulated under 10 CFR part 63).

7. *An estimate of the number of annual responses:* 1; however none are expected in the next three years.

8. *The number of annual respondents:* 1; however none are expected in the next three years.

9. *The number of hours needed annually to complete the requirement or request:* 1; however, none are expected in the next three years.

10. *Abstract:* Part 60 requires States and Indian Tribes to submit certain information to the NRC if they request consultation with the NRC staff concerning the review of a potential repository site, or wish to participate in a license application review for a potential repository (other than the Yucca Mountain, Nevada site proposed by the U.S. Department of Energy). Representatives of States or Indian Tribes must submit a statement of their authority to act in such a representative capacity. The information submitted by the States and Indian Tribes is used by the Director of the Office of Nuclear Material Safety and Safeguards as a basis for decisions about the commitment of NRC staff resources to the consultation and participation efforts. As provided in § 60.1, the regulations in 10 CFR part 60 no longer apply to the licensing of a geologic repository at Yucca Mountain. All of the information collection requirements pertaining to Yucca Mountain were included in 10 CFR part 63, and were approved by the Office of Management and Budget under control number 3150–0199. The Yucca Mountain site is regulated under 10 CFR part 63 (66 FR 55792, November 2, 2001).

A copy of the final supporting statement may be viewed free of charge at the NRC Public Document Room, One White Flint North, 11555 Rockville Pike, Room O–1 F21, Rockville, MD 20852. OMB clearance requests are available at the NRC worldwide Web site: *http://www.nrc.gov/public-involve/doc-comment/omb/index.html.* The document will be available on the NRC home page site for 60 days after the signature date of this notice.

Comments and questions should be directed to the OMB reviewer listed below by October 5, 2009. Comments received after this date will be considered if it is practical to do so, but assurance of consideration cannot be given to comments received after this date.

Christine J. Kymn, Office of Information and Regulatory Affairs (3150–0127), NEOB–10202, Office of Management and Budget, Washington, DC 20503.

Comments can also be e-mailed to *ChristineJ.Kymn@omb.eop.gov* or submitted by telephone at (202) 395–4638.

The NRC Clearance Officer is Tremaine Donnell, (301) 415–6258.

Dated at Rockville, Maryland, this 26th day of August 2009.

For the Nuclear Regulatory Commission.

Tremaine Donnell,

Acting NRC Clearance Officer, Office of Information Services.

[FR Doc. E9–21282 Filed 9–2–09; 8:45 am]

BILLING CODE 7590–01–P

NUCLEAR REGULATORY COMMISSION

[Docket No. NRC–2009–0219]

Agency Information Collection Activities: Submission for the Office of Management and Budget (OMB) Review; Comment Request

AGENCY: U.S. Nuclear Regulatory Commission (NRC).

ACTION: Notice of the OMB review of information collection and solicitation of public comment.

SUMMARY: The NRC has recently submitted to OMB for review the following proposal for the collection of information under the provisions of the Paperwork Reduction Act of 1995 (44 U.S.C. Chapter 35). The NRC hereby informs potential respondents that an agency may not conduct or sponsor, and that a person is not required to respond to, a collection of information unless it displays a currently valid OMB control number. The NRC published a **Federal Register** Notice with a 60-day comment period on this information collection on June 9, 2009.

1. *Type of submission, new, revision, or extension:* Revision.

2. *The title of the information collection:* Reports Concerning Possible Non-Routine Emergency Generic Problems.

3. *Current OMB approval number:* 3150–0012.

4. *The form number if applicable:* Not applicable.

5. *How often the collection is required:* On occasion.

6. *Who will be required or asked to report:* Nuclear power reactor licensees, research and test reactors, and materials applicants and licensees.

7. *An estimate of the number of annual responses:* 340.

8. *The estimated number of annual respondents:* 236.

9. *An estimate of the total number of hours needed annually to complete the requirement or request:* 86,000.

10. *Abstract:* If the NRC determines that a specific event or issue at a nuclear facility may have an immediate, significant generic implication, i.e., that the event or issue has or might have the potential for an immediate occurrence at other facilities and that the occurrence is a threat to public health, safety, to the common defense, and/or the environment, the NRC could issue an emergency non-routine request that requires the collection and reporting of information to the NRC in usually less than 30 days. These issuances could include Bulletins and other forms of generic communication.

A copy of the final supporting statement may be viewed free of charge at the NRC Public Document Room, One White Flint North, 11555 Rockville Pike, Room O–1 F21, Rockville, MD 20852. OMB clearance requests are available at the NRC worldwide Web site: *http://www.nrc.gov/public-involve/doc-comment/omb/index.html*. The document will be available on the NRC home page site for 60 days after the signature date of this notice.

Comments and questions should be directed to the OMB reviewer listed below by October 5, 2009. Comments received after this date will be considered if it is practical to do so, but assurance of consideration cannot be given to comments received after this date.

NRC Desk Officer, Office of Information and Regulatory Affairs (3150–0012), NEOB–10202, Office of Management and Budget, Washington, DC 20503.

The Acting NRC Clearance Officer is Tremaine Donnell, (301) 415–6258.

Dated at Rockville, Maryland, this 26th day of August 2009.

For the Nuclear Regulatory Commission.

Tremaine Donnell,

Acting NRC Clearance Officer, Office of Information Services.

[FR Doc. E9–21283 Filed 9–2–09; 8:45 am]

BILLING CODE 7590–01–P

NUCLEAR REGULATORY COMMISSION

[NRC–2009–0384]

Draft Regulatory Guide: Issuance, Availability

AGENCY: Nuclear Regulatory Commission.

ACTION: Notice of Issuance and Availability of Draft Regulatory Guide, DG–1150, Qualification of Continuous Duty Safety-Related Motors for Nuclear Power Plants.

FOR FURTHER INFORMATION CONTACT: Satish Aggarwal, U.S. Nuclear Regulatory Commission, Washington, DC 20555–0001, telephone: (301) 251–7627, e-mail: *Satish.Aggarwal@nrc.gov,* or R.A. Jervey, telephone: (301) 251–7404, e-mail: *raj@nrc.gov*

SUPPLEMENTARY INFORMATION:

I. Introduction

The U.S. Nuclear Regulatory Commission (NRC) is issuing for public comment a draft guide in the agency's ''Regulatory Guide'' series. This series was developed to describe and make available to the public such information as methods that are acceptable to the NRC staff for implementing specific parts of the NRC's regulations, techniques that the staff uses in evaluating specific problems or postulated accidents, and data that the staff needs in its review of applications for permits and licenses.

The draft regulatory guide (DG), entitled, ''Qualification of Continuous Duty Safety-Related Motors for Nuclear Power Plants,'' is temporarily identified by its task number, DG–1150, which should be mentioned in all related correspondence. DG–1150 is proposed Revision 1 of Regulatory Guide 1.40, dated March 1973.

This regulatory guide describes a method that the staff of the NRC deems acceptable for complying with the Commission's regulations for qualification of continuous duty safety-related motors for nuclear power plants.

The Commission's regulations in Title 10, Part 50, ''Domestic Licensing of Production and Utilization Facilities,'' of the Code of Federal Regulations (10 CFR part 50), require that structures, systems, and components in a nuclear power plant that are important to safety be designed to accommodate the effects of environmental conditions (*i.e.,* they must remain functional under postulated design-basis events). Toward that end, General Design Criteria 1, 2, 4, and 23 of Appendix A, ''General Design Criteria for Nuclear Power Plants,'' to 10 CFR part 50 contain the general requirements. Augmenting those general requirements are the specific requirements pertaining to qualification of certain electrical equipment important to safety that appear in 10 CFR 50.49, ''Environmental Qualification of Electric Equipment Important to Safety for Nuclear Power Plants.'' In addition, Criterion III, ''Design Control,'' of Appendix B, ''Quality Assurance Criteria for Nuclear Power Plants and Fuel Reprocessing Plants,'' to 10 CFR part 50, requires that test programs, when used to verify the adequacy of a specific design feature, should include suitable qualification testing of a prototype unit under the most adverse design conditions.

II. Further Information

The NRC staff is soliciting comments on DG–1150. Comments may be accompanied by relevant information or supporting data and should mention DG–1150 in the subject line. Comments submitted in writing or in electronic form will be made available to the public in their entirety through the NRC's Agencywide Documents Access and Management System (ADAMS). Requests for technical information about DG–1150 may be directed to the NRC contact, Satish Aggarwal at (301) 251–7627 or e-mail to *Satish.Aggarwal@nrc.gov.*

Because your comments will not be edited to remove any identifying or contact information, the NRC cautions you against including any information in your submission that you do not want to be publicly disclosed.

The NRC requests that any party soliciting or aggregating comments received from other persons for submission to the NRC inform those persons that the NRC will not edit their comments to remove any identifying or contact information, and therefore, they should not include any information in their comments that they do not want publicly disclosed. You may submit comments by any of the following methods:

1. *Mail comments to:* Rulemaking and Directives Branch, Mail Stop: TWB–05–B01M, Office of Administration, U.S. Nuclear Regulatory Commission, Washington, DC 20555–0001.

2. *Federal e-Rulemaking Portal:* Go to *http://www.regulations.gov* and search for documents filed under Docket ID [NRC–2009–0384]. Address questions about NRC dockets to Carol Gallagher, 301–492–3668; e-mail *Carol.Gallagher@nrc.gov.*

3. *Fax comments to:* Rulemaking and Directives Branch, Office of

Administration, U.S. Nuclear Regulatory Commission at (301) 492–3446.

Comments would be most helpful if received by October 30, 2009. Comments received after that date will be considered if it is practical to do so, but the NRC is able to ensure consideration only for comments received on or before this date. Although a time limit is given, comments and suggestions in connection with items for inclusion in guides currently being developed or improvements in all published guides are encouraged at any time.

Electronic copies of DG–1150 are available through the NRC's public Web site under Draft Regulatory Guides in the ''Regulatory Guides'' collection of the NRC's Electronic Reading Room at *http://www.nrc.gov/reading-rm/doc-collections/*. Electronic copies are also available in ADAMS (*http://www.nrc.gov/reading-rm/adams.html*), under Accession No. ML091200454.

In addition, regulatory guides are available for inspection at the NRC's Public Document Room (PDR) located at 11555 Rockville Pike, Rockville, Maryland. The PDR's mailing address is USNRC PDR, Washington, DC 20555–0001. The PDR can also be reached by telephone at (301) 415–4737 or (800) 397–4205, by fax at (301) 415–3548, and by e-mail to *pdr.resource@nrc.gov.*

Regulatory guides are not copyrighted, and Commission approval is not required to reproduce them.

Dated at Rockville, Maryland, this 24 day of August 2009.

For the Nuclear Regulatory Commission.

Andrea D. Valentin,

Chief, Regulatory Guide Development Branch, Division of Engineering, Office of Nuclear Regulatory Research.

[FR Doc. E9–21279 Filed 9–2–09; 8:45 am]

BILLING CODE 7590–01–P

NUCLEAR REGULATORY COMMISSION

[NRC–2009–0383]

Draft Regulatory Guide: Issuance, Availability

AGENCY: Nuclear Regulatory Commission.

ACTION: Notice of issuance and availability of Draft Regulatory Guide, DG–1227.

FOR FURTHER INFORMATION CONTACT: Donald Helton, U.S. Nuclear Regulatory Commission, Washington, DC 20555–0001, telephone: (301) 251–7594 or e-mail to *Donald.Helton@nrc.gov*.

SUPPLEMENTARY INFORMATION:

I. Introduction

The U.S. Nuclear Regulatory Commission (NRC) is issuing for public comment a draft guide in the agency's ''Regulatory Guide'' series. This series was developed to describe and make available to the public such information as methods that are acceptable to the NRC staff for implementing specific parts of the NRC's regulations, techniques that the staff uses in evaluating specific problems or postulated accidents, and data that the staff needs in its review of applications for permits and licenses.

The draft regulatory guide (DG), titled, ''An Approach for Plant-Specific, Risk-Informed Decisionmaking: Technical Specifications,'' is temporarily identified by its task number, DG–1227, which should be mentioned in all related correspondence. DG–1227 is proposed Revision 1 of Regulatory Guide 1.177, dated August 1998. The NRC's policy statement on probabilistic risk assessment (PRA) encourages greater use of this analysis technique to improve safety decisionmaking and improve regulatory efficiency. The NRC staff's Risk-Informed and Performance-Based Plan (RPP) formerly known as the PRA Implementation Plan describes current or planned activities to expand use of this analytical method. One activity under way in response to the policy statement is the use of PRA in support of decisions to modify an individual plant's technical specifications (TS).

Licensee-initiated TS changes that are consistent with currently approved staff positions (*e.g.,* regulatory guides, standard review plans, branch technical positions, or the Standard Technical Specifications (STS)) are normally evaluated by the staff using traditional engineering analyses. A licensee would not be expected to submit risk information in support of the proposed change. Licensee-initiated TS change requests that go beyond current staff positions may be evaluated by the staff using traditional engineering analyses as well as the risk-informed approach set forth in this regulatory guide. A licensee may be requested to submit supplemental risk information if such information is not provided in the original submittal by the licensee. If risk information on the proposed TS change is not provided to the staff, the staff will review the information provided by the licensee to determine whether the application can be approved based upon the information provided using traditional methods and will either approve or reject the application based upon the review.

II. Further Information

The NRC staff is soliciting comments on DG–1227. Comments may be accompanied by relevant information or supporting data and should mention DG–1227 in the subject line. Comments submitted in writing or in electronic form will be made available to the public in their entirety through the NRC's Agencywide Documents Access and Management System (ADAMS).

Because your comments will not be edited to remove any identifying or contact information, the NRC cautions you against including any information in your submission that you do not want to be publicly disclosed.

The NRC requests that any party soliciting or aggregating comments received from other persons for submission to the NRC inform those persons that the NRC will not edit their comments to remove any identifying or contact information, and therefore, they should not include any information in their comments that they do not want publicly disclosed. You may submit comments by any of the following methods:

1. *Mail comments to:* Rulemaking and Directives Branch, Mail Stop: TWB–05–B01M, Office of Administration, U.S. Nuclear Regulatory Commission, Washington, DC 20555–0001.

2. *Federal e-Rulemaking Portal:* Go to *http://www.regulations.gov* and search for documents filed under Docket ID [NRC–2009–0383]. Address questions about NRC dockets to Carol Gallagher, 301–492–3668; e-mail *Carol.Gallagher@nrc.gov*.

3. *Fax comments to:* Rulemaking and Directives Branch, Office of Administration, U.S. Nuclear Regulatory Commission at (301) 492–3446.

Requests for technical information about DG–1227 may be directed to the NRC contact, Donald Helton at (301) 251–7594 or e-mail to *Donald.Helton@nrc.gov*.

Comments would be most helpful if received by November 3, 2009. Comments received after that date will be considered if it is practical to do so, but the NRC is able to ensure consideration only for comments received on or before this date. Although a time limit is given, comments and suggestions in connection with items for inclusion in guides currently being developed or improvements in all published guides are encouraged at any time.

Electronic copies of DG–1227 are available through the NRC's public Web site under Draft Regulatory Guides in the ''Regulatory Guides'' collection of the NRC's Electronic Reading Room at

http://www.nrc.gov/reading-rm/doc-collections/. Electronic copies are also available in ADAMS (*http://www.nrc.gov/reading-rm/adams.html*), under Accession No. ML091200294.

In addition, regulatory guides are available for inspection at the NRC's Public Document Room (PDR) located at 11555 Rockville Pike, Rockville, Maryland. The PDR's mailing address is USNRC PDR, Washington, DC 20555–0001. The PDR can also be reached by telephone at (301) 415–4737 or (800) 397–4205, by fax at (301) 415–3548, and by e-mail to *pdr.resource@nrc.gov*.

Regulatory guides are not copyrighted, and Commission approval is not required to reproduce them.

Dated at Rockville, Maryland, this 25th day of August 2009.

For the Nuclear Regulatory Commission.

Andrea D. Valentin,

Chief, Regulatory Guide Development Branch, Division of Engineering, Office of Nuclear Regulatory Research.

[FR Doc. E9–21280 Filed 9–2–09; 8:45 am]

BILLING CODE 7590–01–P

NUCLEAR REGULATORY COMMISSION

[Docket No. 40–9068; NRC–2008–0391]

Lost Creek ISR, LLC; Lost Creek In-Situ Recovery Project; New Source Material License Application; Notice of Intent To Prepare a Supplemental Environmental Impact Statement

AGENCY: Nuclear Regulatory Commission.

ACTION: Notice of Intent (NOI).

SUMMARY: Lost Creek ISR, LLC (LCI) submitted an application for a new source material license for the Lost Creek *In-Situ* Recovery (ISR) Project to be located in Sweetwater County, Wyoming, approximately 70 miles southeast of Lander, Wyoming and approximately 40 miles northwest of Rawlins, Wyoming. The application proposes the construction, operation, and decommissioning of ISR, also known as *in-situ* leach, facilities and restoration of the aquifer from which the uranium is being extracted. LCI submitted the application for the new source material license to the U.S. Nuclear Regulatory Commission (NRC) by a letter dated March 31, 2008. A notice of receipt and availability of the license application, including the Environmental Report (ER), and opportunity to request a hearing was published in the **Federal Register** on July 10, 2008 (73 FR 39728). The purpose of this notice of intent is to inform the public that the NRC will be preparing a site-specific Supplemental Environmental Impact Statement (SEIS) to the Generic Environmental Impact Statement for *In-Situ* Leach Uranium Milling Facilities (ISR GEIS) for a new source material license for the Lost Creek ISR Project, as required by 10 CFR 51.26(d). In addition, as outlined in 36 CFR 800.8, ''Coordination with the National Environmental Policy Act,'' the NRC plans to use the environmental review process as reflected in 10 CFR Part 51 to coordinate compliance with Section 106 of the National Historic Preservation Act.

FOR FURTHER INFORMATION CONTACT: For general information on the NRC NEPA or the environmental review process related to the Lost Creek ISR Project application, please contact the NRC Environmental Project Manager, Alan B. Bjornsen, at (301) 415–1195 or *Alan.Bjornsen@nrc.gov*.

Information and documents associated with the Lost Creek ISR Project, including the license application, are available for public review through our electronic reading room: *http://www.nrc.gov/reading-rm/adams.html* and on the NRC's Lost Creek Site Web page: *http://www.nrc.gov/info-finder/materials/uranium/apps-in-review/lost creek-new-app-review.html.* Documents may also be obtained from NRC's Public Document Room at the U.S. Nuclear Regulatory Commission Headquarters, 11555 Rockville Pike (first floor), Rockville, Maryland.

SUPPLEMENTARY INFORMATION:

1.0 Background

LCI submitted the application for the new source material license to the NRC for ISR facilities by a letter dated March 31, 2008. A notice of receipt and availability of the license application, including the ER, and opportunity to request a hearing was published in the **Federal Register** on July 10, 2008 (73 FR 39728). No requests for hearing were submitted.

The NRC originally planned to document this environmental evaluation in draft and final Environmental Assessments (EAs). However, during the development of the final ISR GEIS, NRC decided to prepare an SEIS that will tier off of the ISR GEIS for applications to license new ISR facilities. This environmental evaluation for the Lost Creek ISR Project will now be documented in draft and final SEISs instead of an EA. While NRC regulations do not require scoping under 10 CFR Part 51 for SEISs, NRC staff met with Federal (Bureau of Land Management—Cheyenne, Casper, Rawlins; Bureau of Indian Affairs—Fort Washakie; Fish & Wildlife Service—Rawlins), State (Wyoming Department of Environmental Quality—Cheyenne, Lander; State Engineer's Office; Wyoming Department of Game & Fish—Lander; Governor's Planning Office; State Historic Preservation Office) and local government agencies (Sweetwater County Planning Department; Sweetwater County Engineers' Office; Fremont County Planning Department; Town of Bairoil) and public organizations (Lander Chamber of Commerce; Wyoming Community Development Authority) in January of 2009 as part of a site visit to gather site-specific information to assist in the preparation of the Lost Creek ISR Project environmental review. NRC also contacted potentially interested Tribes and local public interest groups via e-mail and telephone to gather additional information.

The NRC has begun evaluating the potential environmental impacts associated with the proposed ISR facility in parallel with the review of the license application. This environmental evaluation will be documented in draft and final SEISs in accordance with NRC's NEPA implementing regulations contained in 10 CFR Part 51. The NRC is required by 10 CFR 51.20(b)(8) to prepare an Environmental Impact Statement (EIS) or a supplement to an EIS for the issuance of a license to possess and use source material for uranium milling. The ISR GEIS and the site-specific SEIS fulfills this regulatory requirement. The purpose of the present notice is to inform the public that the NRC staff will prepare a site-specific supplement to the ISR GEIS (NUREG–1910) as part of the review of the application.

2.0 Lost Creek ISR Facilities

The facilities, if licensed, would include a central processing plant, accompanying wellfields, and ion exchange columns. The process involves the dissolution of the water-soluble uranium from the mineralized host sandstone rock by pumping oxidants (oxygen or hydrogen peroxide) and chemical compounds (sodium bicarbonate) through a series of production and extraction wells. The uranium-rich solution is transferred from the production wells to the central processing plant for uranium concentration using ion exchange columns. Processing is conducted in the central processing plant to produce a yellowcake slurry that will be transported to another ISR facility for final processing into a dry yellowcake.

3.0 Alternatives To Be Evaluated

No-Action—The no-action alternative would be not to issue the license. Under this alternative, the NRC would not approve the license application for the proposed ISR facility. This serves as a baseline for comparison.

Proposed action—The proposed Federal action is to issue a license to use or process source material at the proposed ISR facility. The license review process analyzes the construction, operation, and decommissioning of ISR facility and restoration of the aquifer from which the uranium is being extracted. The ISR facility would be located in Sweetwater County, Wyoming, approximately 70 miles southeast of Lander, Wyoming and approximately 40 miles northwest of Rawlins, Wyoming. The applicant would be issued an NRC license under the provisions of 10 CFR Part 40.

Other alternatives not listed here may be identified through the environmental review process.

4.0 Environmental Impact Areas To Be Analyzed

The following areas have been tentatively identified for analysis in the SEIS:

- *Land Use:* Plans, policies, and controls;
- *Transportation:* Transportation modes, routes, quantities, and risk estimates;
- *Geology and Soils:* Physical geography, topography, geology, and soil characteristics;
- *Water Resources:* Surface and groundwater hydrology, water use and quality, and the potential for degradation;
- *Ecology:* Wetlands, aquatic, terrestrial, economically and recreationally important species, and threatened and endangered species;
- *Air Quality:* Meteorological conditions, ambient background, pollutant sources, and the potential for degradation;
- *Noise:* Ambient, sources, and sensitive receptors;
- *Historical and Cultural Resources:* Historical, archaeological, and traditional cultural resources;
- *Visual and Scenic Resources:* Landscape characteristics, manmade features and viewshed;
- *Socioeconomics:* Demography, economic base, labor pool, housing, transportation, utilities, public services/facilities, and education;
- *Environmental Justice:* Potential disproportionately high and adverse impacts to minority and low-income populations;
- *Public and Occupational Health:* Potential public and occupational consequences from construction, routine operation, transportation, and credible accident scenarios (including natural events);
- *Waste Management:* Types of wastes expected to be generated, handled, and stored; and
- *Cumulative Effects:* Impacts from past, present, and reasonably foreseeable actions at and near the site(s).

This list is not intended to be all inclusive, nor is it a predetermination of potential environmental impacts.

5.0 The NEPA Process

The SEIS for the Lost Creek ISR Project will be prepared pursuant to the NRC's NEPA Regulations at 10 CFR Part 51. The NRC will continue its environmental review of the application and as soon as practicable, the NRC and its contractor will prepare and publish a draft SEIS. NRC currently plans to have a 45-day public comment period for the draft SEIS. Availability of the draft SEIS and the dates of the public comment period will be announced in the **Federal Register** and the NRC Web site: *http://www.nrc.gov.* The final SEIS will include responses to public comments received on the draft SEIS.

Dated at Rockville, Maryland, this 25th day of August 2009.

For the Nuclear Regulatory Commission.

Patrice M. Bubar,

Deputy Director, Environmental Protection and Performance Assessment Directorate, Division of Waste Management and Environmental Protection, Office of Federal and State Materials and Environmental Management Programs.

[FR Doc. E9–21285 Filed 9–2–09; 8:45 am]

BILLING CODE 7590–01–P

NUCLEAR REGULATORY COMMISSION

[NRC–2009–0386]

Notice of Availability of Revised Fuel Cycle Oversight Process

AGENCY: Nuclear Regulatory Commission.

ACTION: Request for public comment on revision of the NRC's fuel cycle oversight program.

SUMMARY:

The Nuclear Regulatory Commission (NRC) is proposing significant revisions to its processes for overseeing the safety and security of fuel cycle facilities. The NRC plans to develop a revised oversight process for fuel cycle facilities that is more risk-informed, and performance-based, resulting in more objective, predictable, and transparent results of licensee or certificate holder assessments. (This notice will use ''licensees'' throughout, but in doing so the intent is also to include ''certificate holders.'') Current oversight consists mainly of inspections, enforcement and periodic assessments based on inspection findings. NRC staff intends that any revised oversight would not establish any new regulatory requirements. Rather, revised oversight would improve inspection and assessment so that NRC conclusions would be more closely based on risk and more understandable to members of the public. Revised oversight could potentially add objective measures of performance, called performance indicators, with criteria for measuring acceptable performance. However, development of performance indicators may not be part of the initial revision to the oversight process. Inspections would focus in areas of highest risk that are not well-measured by performance indicators and on validating performance indicator information. Assessments would be based on more objective criteria. Supplemental inspections (those above and beyond the number and type of inspections normal for a well-performing plant) of licensees whose performance shows indications of decline, would also be based on objective criteria. These principles are currently applied by the NRC in the oversight of power reactor safety and security and is outlined in ''Reactor Oversight Process,'' NUREG–1649, (Agencywide Documents Access and Management System [ADAMS] Accession No. ML070890365).

Since 1999, the NRC has undertaken several initiatives to examine and improve the NRC's oversight process for fuel cycle facilities, including those licensed or certified under Title 10 of the *Code of Federal Regulations* (10 CFR) Part 40 (Domestic Licensing of Source Material), Part 70 (Domestic Licensing of Special Nuclear Material), and Part 76 (Certification of Gaseous Diffusion Plants). Although previous efforts resulted in some revisions to inspection and assessment procedures, current NRC oversight could be improved by more fully incorporating into inspection and assessment the risk insights of licensees' integrated safety analyses, where applicable (the requirement to perform an integrated safety analysis apply only to 10 CFR Part 70 licensees). Integrated safety analyses establish safety controls based on analyses of potential hazards at a facility.

To meet the objective of developing an oversight process with an improved degree of transparency, predictability, objectivity and consistency, using risk-informed and performance-based tools, the staff is undertaking a comprehensive effort to develop a Revised Fuel Cycle Oversight Process (RFCOP). The staff's efforts will be consistent with the recent guidance in this area, notably the guidance provided in the Staff Requirements Memoranda dated April 3, 2008, and February 17, 2009 (Agencywide Documents Access and Management System [ADAMS] Accession Nos. ML080940439 and ML090490032), and will be responsive to recommendations in the Office of Inspector General report OIG 07–A–06 (ADAMS ML070100282).

DATES: The comment period expires November 2, 2009. Comments received after this date will be considered if it is practical to do so, but the Commission is able to ensure consideration only for comments received on or before this date.

ADDRESSES: You may submit comments by any one of the following methods. Please include Docket ID NRC–2009–0386 in the subject line of your comments. Comments submitted in writing or electronic format will be posted on the NRC Web site and on the Federal rulemaking Web site Regulations.gov. Because your comments will not be edited to remove any identifying information, the NRC cautions you against including any information in your submission that you do not want to be publically disclosed.

The NRC requests that any party soliciting or aggregating comments received from other persons for submission to the NRC inform those persons that the NRC will not edit their comments to remove any identifying or contact information, and therefore they should not include any information in their comments that they do not want publically disclosed.

Federal Rulemaking Web site: Go to *http://www.regulations.gov* and search for documents filed under Docket ID NRC–2009–0386. Address questions about NRC dockets to Carol Gallagher 301–492–3668; e-mail *Carol.Gallagher@nrc.gov.*

Mail comments to: Michael T. Lesar, Chief, Rules and Directives Branch (RDB), Division of Administrative Services, Office of Administration, *Mail Stop:* TWB–05–B10M, U.S. Nuclear Regulatory Commission, Washington, DC 20555–0001, or by fax to RBD at (301) 492–3446.

You can access publically available documents related to this notice using the following methods:

NRC's Public Document Room (PDR): The public may examine and have copied for a fee publically available documents at the NRC's PDR, Public File Area 01 F21, One White Flint North, 11555 Rockville Pike, Rockville, Maryland.

NRC's Agencywide Documents Access and Management System (ADAMS): Publically available documents created or received at the NRC are available electronically at the NRC's Electronic Reading Room at *http://www.nrc.gov/reading* room-rm/adams.html. From this page, the public can gain entry into ADAMS, which provides text and image files of NRC's public documents. If you do not have access to ADAMS or if there are problems in accessing the documents in ADAMS, contact the NRC's PDR reference staff at 1–800–397–4209, 301–415–4737, or by e-mail to *pdr.resources@nrc.gov.*

Members of the public interested in obtaining additional information in regard to the NRC's Revised Fuel Cycle Oversight Process will be able to do so by periodically visiting *http://www.regulations.gov/fdmspublic/component/main?main=DocketDetail&d=NRC–2009–0386.* The NRC expects to continue publishing documents about the Revised Fuel Cycle Oversight Process using the regulations.gov Web site, in addition to making them available electronically in the Public Document Room (PDR), and the Electronic Document Room using the Agencywide Document Access and Management System (ADAMS), *http://www.nrc.gov/reading* room-rm/adams.html.

FOR FURTHER INFORMATION CONTACT: Russell Gibbs, Team Leader, Division of Fuel Facility Inspection, Region II, U.S. Nuclear Regulatory Commission, Washington, DC 20005–0001. *Telephone:* (404) 562–4806 or (301) 492–3120; Fax (404) 562–4955 or (301) 492–3363; *E-mail: Russell.Gibbs@nrc.gov.*

Background:

The NRC's mission is to license and regulate the civilian use of byproduct, source, and special nuclear materials to ensure adequate protection of public health and safety, promote the common defense and security, and protect the environment.

NRC's current fuel cycle facility oversight program relies primarily on inspections at each fuel cycle facility. Inspections review licensee activities in the areas of nuclear criticality, chemical process, fire, and radiation safety, emergency preparedness, physical security, information security, and material control and accounting. NRC's inspection results are documented in inspection reports.

Over the years, NRC staff has periodically changed the fuel cycle oversight process to make improvements. The NRC plans to build on these previous actions by revising the oversight program to better use the risk insights from integrated safety analyses and to develop more objective assessment and decision tools. Integrated safety analyses are required by NRC regulations to be done by Part 70 licensees and applicants for a Part 70 license. The analyses evaluate what could go wrong at a facility and establish the basis for safety controls called items relied on for safety (IROFS).

In 1999, the success in the initial implementation of the Reactor Oversight Process (ROP) prompted the NRC staff to evaluate whether the fuel cycle facility oversight process could be improved using elements similar to those in the ROP. Stakeholders (licensees, public interest groups, NRC staff, interested members of the general public, etc.) were actively involved in the development of a revised oversight process. After approximately 2 years, the NRC decided to defer further work on the revised oversight process until after licensees completed the integrated safety analyses and the NRC reviewed them. The NRC staff also evaluated the feasibility of performance indicators for fuel cycle facilities, but subsequently ended that work in 2006 at the direction of the Commission. In 2007, the Office of Inspector General (OIG) issued an audit report recommending that the NRC develop a fuel cycle oversight process that is consistent with a structured process, similar to the ROP. In April 2008, the Commission directed the staff to make the fuel cycle performance review process more transparent and risk-informed and to consider performance indicators or metrics leveraging the risk insights of ISAs.

In March 2009, a Steering Committee was established to provide overall leadership to revise the fuel cycle oversight process. The Steering Committee then established a team of NRC staff members with a broad range of experiences to develop a revised oversight process while working closely with both internal and external stakeholders.

The revised oversight process would use the NRC's Strategic Goals as its foundation. The NRC's Strategic Goals are to: (1) Ensure adequate protection of public health and safety and the

environment; (2) and ensure adequate protection in the secure use and management of radioactive materials.

The staff intends to use risk-informed methods to assess facility performance. In a ''risk-informed'' approach to regulatory decision making, risk insights are considered together with other factors to establish a process that better focuses both licensee and regulatory attention on design and operational issues commensurate with their importance to safety and security. The NRC plans to produce a predictable, graded process that will help to focus NRC oversight based on both the most risk significant aspects of plant design and operation as well as licensee performance. NRC staff intends that the revised oversight process more fully use the risk insights from licensees' integrated safety analyses, where applicable. The NRC intends that the revised oversight will use objective measures and metrics for NRC assessments of licensee performance and allow the NRC to make timely decisions on what kind of inspections will be conducted beyond a basic set of inspections. The revised program would include a baseline level of oversight that would be carried out for all licensees. The inspection program may be supplemented by performance indicator information provided by licensees voluntarily.

This program, when fully implemented, would apply to uranium enrichment plants, high- and low-enriched uranium and plutonium processing plants, and uranium hexafluoride processing facilities. Uranium mill facilities have a separate inspection program.

The NRC staff is considering an oversight framework that would include strategic performance areas (safety and security) supported by cornerstones. In this framework, licensee performance in each cornerstone may be assessed using a combination of performance indicators and the results of a baseline inspection program as determined by a defined significance determination process. Both performance indicators and the results of the inspection program would have risk-informed thresholds, and crossing either a performance indicator or an inspection threshold would have the same meaning in the assessment of each cornerstone. Licensee and NRC action for a given level of performance would be prescribed by an Action Matrix. The entire process would be supported by a robust licensee corrective action program at each licensee facility.

Although the NRC believes that enhancements to fuel cycle oversight are needed, the NRC is confident that its current oversight program is adequate for the NRC to conclude whether or not licensees are operating safely and securely.

Scope of Public Comment Period

The NRC seeks public comment and feedback on the specific topics highlighted in the questions below. Commenters are not limited to and are not obligated to address every issue discussed in the questions. In providing comments, each commenter's response should reference the number of the applicable question (*e.g.,* ''Response to A.1.''). Comments should be as specific as possible and should indicate why a commenter supports or does not support an aspect of this plan. The use of examples is encouraged.

At this time comments are requested on the following issues:

A. The Regulatory Oversight Framework, Cornerstones, Significance Determination, Action Matrix, Performance Indicators, and Their Thresholds

1. Graphic descriptions of an Oversight Framework and a Fuel Cycle Facility Oversight Process are available in ADAMS (ML091970084)

These graphically describe how the RFCOP would: (1) Facilitate greater regulatory attention to facilities with performance problems while maintaining a baseline level of oversight on facilities that perform well; (2) give industry and public timely and understandable assessments of facility performance; (3) allow all stakeholders to understand what the regulatory response to issues and indicators will be; and (4) focus NRC and licensee resources on those aspects of performance having the greatest impact on safety and security.

Are there any other significant areas that need to be addressed for the NRC to meet its mission of ensuring that fuel cycle facilities are operated in a manner that provides adequate protection of public health and safety and the environment, and protects against radiological sabotage and the theft or diversion of special nuclear materials?

2. Cornerstones

The cornerstones being considered for these facilities include nuclear criticality, radiological, and chemical safety, emergency preparedness, physical security, information security and material control and accounting. Information Security will not be incorporated into the revised oversight at this time. Fire safety would be addressed through its impacts on other safety cornerstones such as criticality, radiological and chemical safety. These cornerstones are being considered because staff believes that they best represent the requirements that are necessary to meet the Agency's mission.

Are there other important aspects of fuel cycle facility performance that would not otherwise be captured by these cornerstones?

3. Significance Determination Process

When a licensee performance deficiency is identified, it would be assessed using a defined significance determination process which would use risk insights to evaluate the significance of the performance deficiency against defined thresholds. The risk-significance of the performance deficiency would be determined before any NRC action, beyond baseline inspection and oversight, would be taken. If it is determined that the performance deficiency is not risk-significant, each facility would be expected to disposition the issue using its own corrective action program without additional oversight by the NRC. If it is determined to be risk-significant, the NRC's response would be prescribed using an Action Matrix.

Are there other important aspects of significance determination that should be considered by NRC?

4. Performance Indicators and Associated Thresholds

Performance indicators may not be developed in the initial revision to the fuel cycle oversight process. However, the NRC staff plans to interact with industry and other stakeholders to assess development of indicators to measure important attributes that will help the NRC ensure that the facility is operating in a manner that protects public health and safety and ensures security. The performance indicators, which would be submitted voluntarily by licensees on a periodic basis, would provide a sample of objective data on which to assess licensee performance. The performance indicators are intended to directly relate to the cornerstones and be significant, high level indicators of facility performance that, when thresholds are crossed, reveal adverse trends that warrant increased regulatory oversight.

Would performance indicators, along with inspection findings, be effective in determining levels of licensee performance? What should be considered in determining performance indicators and their thresholds? How should the performance indicators be used?

5. Action Matrix

An Action Matrix would be developed to provide guidance to ensure consistent regulatory response for a given level of licensee performance. The matrix would be categorized into four areas (meeting between NRC and Licensee Senior Management, licensee action, NRC inspection, and regulatory action) and would be graded across a range of licensee performance. The NRC's decision to take an action beyond baseline inspection and oversight would be a direct result of performance indicators, if available, or inspection findings that crossed defined thresholds. If licensee performance declines, more significant actions would be considered.

What should the NRC consider in the development of an Action Matrix? Would the use of the Action Matrix and underlying decision logic be an appropriate approach to NRC and licensee action?

6. Other Comments

Are there any other comments related to the oversight framework, cornerstones, performance indicators, or thresholds?

B. Risk-Informed Baseline Inspections

The baseline inspection program would be based on a set of inspectable areas that, in conjunction with the performance indicators, if available, would provide enough information for the NRC to determine whether the objectives of each cornerstone of safety or security are being met. This baseline inspection program would be the minimum inspection at each facility. The baseline inspection could be different for different types of facilities that have different potential risks (for example low enriched uranium processing versus high enriched uranium processing).

Are there any other factors that should be considered in defining the baseline inspection program? Are there any other comments related to the baseline inspection program?

C. Assessment Process

1. Frequency of Assessments

The revised oversight process would provide for continuous, semi-annual, annual, and biennial reviews of licensee performance. The resulting assessment would be based on licensee performance, as measured by performance indicators, if available, and inspection program results, as compared against an Action Matrix. The semiannual and annual assessments would also include inspection planning.

Would this frequency of conducting assessments be appropriate to maintain a current assessment of licensee performance?

2. Communicating Assessment Results

The revised oversight would include several methods for communicating information to licensees and the public. First, the information being assessed (performance indicator and inspection results) would be made public as the information becomes available. Second, the NRC would send each licensee a letter at a defined frequency (*e.g.,* every six months) that provides the NRC's assessment of licensee performance and describes the NRC's oversight of the facility. In addition, the letter would outline any changes to the NRC's planned inspections for the upcoming 18 months. Third, the NRC would hold an annual public meeting with each licensee to discuss its performance.

Would these methods of communication provide sufficient opportunity for licensees and the public to gain an understanding of performance and interact with the NRC?

3. Other Comments

Are there any other comments related to the proposed assessment process?

D. Implementation

1. Transition Plan

A transition plan that identifies important activities needed to complete and implement the potential processes would have to be developed.

Are there major activities that if not accomplished could prevent successful implementation of the potential processes?

2. Other Comments

Are there any other comments related to implementing the new processes?

E. Additional Comments

In addition to the previously mentioned issues, commenters are invited to give any other views on the NRC assessment process that could assist the NRC in improving its effectiveness.

Dated at Rockville, Maryland this 21st day of August 2009.

For the Nuclear Regulatory Commission.

Marissa G. Bailey,

Director, Special Projects and Technical Support Directorate, Division of Fuel Cycle Safety and Safeguards, Office of Nuclear Material Safety and Safeguards.

[FR Doc. E9–21278 Filed 9–2–09; 8:45 am]

BILLING CODE 7590–01–P

SECURITIES AND EXCHANGE COMMISSION

[Release No. IC–28892]

Notice of Applications for Deregistration Under Section 8(f) of the Investment Company Act of 1940

August 28, 2009.

The following is a notice of applications for deregistration under section 8(f) of the Investment Company Act of 1940 for the month of August, 2009. A copy of each application may be obtained via the Commission's Web site by searching for the file number, or an applicant using the Company name box, at *http://www.sec.gov/search/search.htm* or by calling (202) 551–8090. An order granting each application will be issued unless the SEC orders a hearing. Interested persons may request a hearing on any application by writing to the SEC's Secretary at the address below and serving the relevant applicant with a copy of the request, personally or by mail. Hearing requests should be received by the SEC by 5:30 p.m. on September 22, 2009, and should be accompanied by proof of service on the applicant, in the form of an affidavit or, for lawyers, a certificate of service. Hearing requests should state the nature of the writer's interest, the reason for the request, and the issues contested. Persons who wish to be notified of a hearing may request notification by writing to the Secretary, U.S. Securities and Exchange Commission, 100 F Street, NE., Washington, DC 20549–1090.

For Further Information Contact: Diane L. Titus at (202) 551–6810, SEC, Division of Investment Management, Office of Investment Company Regulation, 100 F Street, NE., Washington, DC 20549–4041.

Dreman Claymore Global Dividend & Income Fund [File No. 811–21557] Fiduciary/Claymore Energy & Infrastructure Fund [File No. 811–21810] Claymore/Zacks Quantitative Growth & Income Fund [File No. 811–21925] Claymore/Voyageur Income & Opportunities Fund [File No. 811–22076]

Summary: Each applicant, a closed-end investment company, seeks an order declaring that it has ceased to be an investment company. Applicants have never made a public offering of their securities and do not propose to make a public offering or engage in business of any kind.

Filing Dates: The applications were filed on June 10, 2009, and amended on August 14, 2009.

Applicants' Address: 2455 Corporate West Dr., Lisle, IL 60532.

Keystone High Income Bond Fund B–4 [File No. 811–95]

Summary: Applicant seeks an order declaring that it has ceased to be an investment company. On or about December 22, 1997, applicant transferred its assets to Evergreen High Yield Bond Fund, a series of Evergreen Fixed Income Trust, based on net asset value. Expenses incurred in connection with the reorganization were paid by applicant.

Filing Date: The application was filed on August 12, 2009.

Applicant's Address: 200 Berkeley St., 26th Floor, Boston, MA 02116.

Keystone Growth & Income Fund S–1 [File No. 811–98]

Summary: Applicant seeks an order declaring that it has ceased to be an investment company. On or about December 22, 1997, applicant transferred its assets to Evergreen Blue Chip Fund, a series of Evergreen Equity Trust, based on net asset value. Expenses incurred in connection with the reorganization were paid by applicant.

Filing Date: The application was filed on August 12, 2009.

Applicant's Address: 200 Berkeley St., 26th Floor, Boston, MA 02116.

Keystone Government Securities Fund [File No. 811–4949]

Summary: Applicant seeks an order declaring that it has ceased to be an investment company. On or about July 31, 1997, applicant transferred its assets to Evergreen U.S. Government Fund, a series of Evergreen Investment Trust, based on net asset value. Expenses incurred in connection with the reorganization were paid by applicant.

Filing Date: The application was filed on August 5, 2009.

Applicant's Address: 200 Berkeley St., Boston, MA 02116.

Eaton Vance Insured Florida Plus Municipal Bond Fund [File No. 811–21222]

Summary: Applicant, a closed-end investment company, seeks an order declaring that it has ceased to be an investment company. On December 15, 2008, applicant transferred its assets to Eaton Vance Insured Municipal Bond Fund, based on net asset value. Applicant's auction preferred shares were redeemed prior to the reorganization. Expenses of $212,904 incurred in connection with the reorganization were paid by applicant and the acquiring fund.

Filing Date: The application was filed on July 24, 2009.

Applicant's Address: Two International Place, Boston, MA 02110.

Pioneer Interest Shares [File No. 811–2239]

Summary: Applicant, a closed-end investment company, seeks an order declaring that it has ceased to be an investment company. On October 19, 2007, applicant transferred its assets to Pioneer Bond Fund, based on net asset value. Expenses of approximately $190,894 incurred in connection with the reorganization were paid by applicant and Pioneer Investment Management, Inc., applicant's investments adviser.

Filing Date: The application was filed on July 27, 2009.

Applicant's Address: 60 State St., Boston, MA 02109.

Keystone Fund for Total Return [File No. 811–4950]

Summary: Applicant seeks an order declaring that it has ceased to be an investment company. On or about December 22, 1997, applicant transferred its assets to Keystone Fund for Total Return, a series of Evergreen Equity Trust, based on net asset value. Expenses incurred in connection with the reorganization were paid by applicant.

Filing Date: The application was filed on July 30, 2009.

Applicant's Address: 200 Berkeley St., Boston, MA 02116.

Keystone Institutional Trust [File No. 811–7441]

Summary: Applicant seeks an order declaring that it has ceased to be an investment company. On or about December 22, 1997, applicant transferred its assets to Evergreen Select Small Cap Growth Fund, a series of Evergreen Select Equity Trust, based on net asset value. Expenses incurred in connection with the reorganization were paid by applicant.

Filing Date: The application was filed on August 13, 2009.

Applicant's Address: 200 Berkeley St., 26th Floor, Boston, MA 02116.

Keystone Global Opportunities Fund [File No. 811–5404]

Summary: Applicant seeks an order declaring that it has ceased to be an investment company. On or about January 13, 1998, applicant transferred its assets to Keystone Global Opportunities Fund, a series of Evergreen International Trust, based on net asset value. Expenses incurred in connection with the reorganization were paid by applicant.

Filing Date: The application was filed on August 4, 2009.

Applicant's Address: 200 Berkeley St., Boston, MA 02116.

Allstate Financial Investment Trust [File No. 811–22165]

Summary: Applicant seeks an order declaring that it has ceased to be an investment company. On June 30, 2009, applicant made a liquidating distribution to its shareholders, based on net asset value. Expenses of $4,500 incurred in connection with the liquidation were paid by Allstate Investment Advisors, LLC, applicant's investment adviser.

Filing Date: The application was filed on August 13, 2009.

Applicant's Address: 3100 Sanders Rd., Suite J5B, Northbrook, IL 60062–7154.

Keystone Institutional Adjustable Rate Fund [File No. 811–6412]

Summary: Applicant seeks an order declaring that it has ceased to be an investment company. On or about December 22, 1997, applicant transferred its assets to Evergreen Select Adjustable Rate Fund, a series of Evergreen Select Fixed Income Trust, based on net asset value. Expenses incurred in connection with the reorganization were paid by applicant.

Filing Date: The application was filed on August 13, 2009.

Applicant's Address: 200 Berkeley St., 26th Floor, Boston, MA 02116.

RMR F.I.R.E. Fund [File No. 811–21616]

Summary: Applicant, a closed-end investment company, seeks an order declaring that it has ceased to be an investment company. On June 18, 2009, applicant transferred its assets to RMR Real Estate Income Fund, based on net asset value. Each holder of applicant's preferred shares received preferred shares of RMR Real Estate Income Fund having an aggregate liquidation preference equal to the aggregate liquidation preference attributable to applicant's preferred shares. Expenses of $141,011 incurred in connection with the reorganization were paid by applicant.

Filing Dates: The application was filed on June 19, 2009, and amended on August 12, 2009.

Applicant's Address: 400 Centre St., Newton, MA 02458.

RMR Preferred Dividend Fund [File No. 811–21671]

Summary: Applicant, a closed-end investment company, seeks an order declaring that it has ceased to be an investment company. On June 23, 2009,

applicant transferred its assets to RMR Real Estate Income Fund, based on net asset value. Each holder of applicant's preferred shares received preferred shares of RMR Real Estate Income Fund having an aggregate liquidation preference equal to the aggregate liquidation preference attributable to applicant's preferred shares. Expenses of $202,707 incurred in connection with the reorganization were paid by applicant.

Filing Dates: The application was filed on June 24, 2009, and amended on August 10, 2009.

Applicant's Address: 400 Centre St., Newton, MA 02458.

RMR Dividend Capture Fund [File No. 811–22079]

Summary: Applicant, a closed-end investment company, seeks an order declaring that it has ceased to be an investment company. On June 22, 2009, applicant transferred its assets to RMR Real Estate Income Fund, based on net asset value. Each holder of applicant's preferred shares received preferred shares of RMR Real Estate Income Fund having an aggregate liquidation preference equal to the aggregate liquidation preference attributable to applicant's preferred shares. Expenses of $128,701 incurred in connection with the reorganization were paid by applicant.

Filing Dates: The application was filed on June 23, 2009, and amended on August 10, 2009.

Applicant's Address: 400 Centre St., Newton, MA 02458.

Morgan Stanley Total Market Index Fund [File No. 811–9259]

Summary: Applicant seeks an order declaring that it has ceased to be an investment company. On July 25, 2008, applicant made a liquidating distribution to its shareholders, based on net asset value. Expenses of $78,565 incurred in connection with the liquidation were paid by Morgan Stanley Investment Advisors, Inc., applicant's investment adviser.

Filing Dates: The application was filed on July 6, 2009, and amended on August 7, 2009.

Applicant's Address: c/o Morgan Stanley Investment Advisors Inc., 522 Fifth Ave., New York, NY 10036.

BNY Hamilton Funds, Inc. [File No. 811–6654]

Summary: Applicant seeks an order declaring that it has ceased to be an investment company. On September 12, 2008, applicant transferred the assets from all of its series, except BNY Hamilton Multi-Cap Equity Fund and BNY Hamilton Municipal Enhanced Yield Fund (the ''remaining series''), to corresponding series of BNY Mellon Funds Trust, Dreyfus Institutional Reserves Funds, Dreyfus/Laurel Funds, Inc., Dreyfus/Laurel Funds Trust, Dreyfus Premier Investment Funds, Inc. and Dreyfus Tax Exempt Cash Management Funds, based on net asset value. On November 10, 2008, applicant's remaining series transferred their assets to Managers AMG Funds, based on net asset value. Expenses of $2,772,500 incurred in connection with the reorganization were paid by The Bank of New York Mellon, applicant's administrator.

Filing Date: The application was filed on July 14, 2009.

Applicant's Address: 3435 Stelzer Rd., Columbus, OH 43219–3035.

For the Commission, by the Division of Investment Management, pursuant to delegated authority.

Florence E. Harmon,

Deputy Secretary.

[FR Doc. E9–21221 Filed 9–2–09; 8:45 am]

BILLING CODE 8010–01–P

SECURITIES AND EXCHANGE COMMISSION

[Release No. 34–60582; File No. 4–429]

Joint Industry Plan; Order Approving Amendments To Withdraw From the Intermarket Options Linkage Plan Filed by Chicago Board Options Exchange, Incorporated, International Securities Exchange, LLC, The NASDAQ Stock Market LLC, NASDAQ OMX BX, Inc., NASDAQ OMX PHLX, Inc., NYSE Amex LLC, and NYSE Arca, Inc.

August 28, 2009.

I. Introduction

On June 25, 2009, June 25, 2009, July 2, 2009, July 2, 2009, July 7, 2009, July 17, 2009, and July 20, 2009, NYSE Arca, Inc. (''NYSE Arca''), NYSE Amex, LLC (''NYSE Amex''), International Securities Exchange, LLC (''ISE''), Chicago Board Options Exchange, Incorporated (''CBOE''), NASDAQ OMX BX, Inc. (''BX''), NASDAQ OMX PHLX, Inc. (''Phlx''), and The NASDAQ Stock Market LLC (''Nasdaq'') (collectively, ''Participants''),[1] respectively, submitted to the Securities and Exchange Commission (''Commission'') amendments to the Plan for the Purpose of Creating and Operating an Intermarket Option Linkage (''Linkage Plan'') (''Amendments'').[2] The proposed Amendments were published for comment in the **Federal Register** on July 28, 2009.[3] The Commission received no comment letters in response to the Notice. This order approves the Amendments.

II. Description of the Proposed Amendments

The Participants submitted the Amendments to withdraw from the Linkage Plan. Pursuant to Section 4(d) of the Linkage Plan, a Participant may withdraw from the Linkage Plan by: (i) Providing not less than 30 days prior written notice to each of the other Participants and to the facilities manager[4] of such intent to withdraw; and (ii) effecting an amendment to the Linkage Plan as specified in Section 5(c)(iii) of the Linkage Plan. Section 5(c)(iii) of the Linkage Plan states that a Participant can withdraw from the Linkage Plan by filing an amendment deleting its name in Section 4(a) of the Linkage Plan and submitting such amendment to the Commission for approval. The submitting Participant must state how it plans to accomplish, by alternate means, the goals of the Linkage Plan regarding limiting trade-throughs of prices on other exchanges trading the same options classes. Such amendment is effective upon Commission approval.

As set forth in the Notice, the Participants plan to accomplish the Linkage Plan's goals through

[1] *See* letter from Peter G. Armstrong, NYSE Arca, to Elizabeth Murphy, Secretary, Commission, dated June 24, 2009; letter from Michael Babel, NYSE Amex, to Elizabeth Murphy, Secretary, Commission, dated June 24, 2009; letter from Michael J. Simon, ISE, to Elizabeth Murphy, Secretary, Commission, dated July 1, 2009; letter from Edward J. Joyce, CBOE, to Elizabeth Murphy, Secretary, Commission, dated July 1, 2009; letter from Maura A. Looney, Associate Vice President, BX, to Elizabeth Murphy, Secretary, Commission, dated July 6, 2009; letter from Richard S. Rudolph, Assistant General Counsel, Phlx, to Elizabeth Murphy, Secretary, Commission, dated July 16, 2009; and letter from Jeffrey S. Davis, Vice President and Deputy General Counsel, Nasdaq, to Elizabeth Murphy, Secretary, Commission, dated July 17, 2009.

[2] On July 28, 2000, the Commission approved a national market system plan for the purpose of creating and operating an intermarket options market linkage proposed by the American Stock Exchange LLC (n/k/a NYSE Amex), CBOE, and ISE. *See* Securities Exchange Act Release No. 43086 (July 28, 2000), 65 FR 48023 (August 4, 2000). Subsequently, Philadelphia Stock Exchange, Inc. (n/k/a Phlx), Pacific Exchange, Inc. (n/k/a NYSE Arca), Boston Stock Exchange, Inc. (n/k/a BX), and Nasdaq joined the Linkage Plan. *See* Securities Exchange Act Release Nos. 43573 (November 16, 2000), 65 FR 70851 (November 28, 2000); 43574 (November 16, 2000), 65 FR 70850 (November 28, 2000); 49198 (February 5, 2004), 69 FR 7029 (February 12, 2004); and 57545 (March 21, 2008), 73 FR 16394 (March 27, 2008).

[3] *See* Securities Exchange Act Release No. 60360 (July 21, 2009), 74 FR 37265 (''Notice'').

[4] The facilities manager of the Linkage Plan is the Options Clearing Corporation.

membership in the Options Order Protection and Locked/Crossed Market Plan (''New Plan''), which was approved by the Commission on July 30, 2009.[5] The New Plan requires its participants to establish, maintain and enforce written procedures and policies that are reasonably designed to prevent trade-throughs.[6] The Participants state that the New Plan will accomplish this in a more efficient manner than the Linkage Plan. Specifically, the New Plan eliminates a central hub and addresses trade-through compliance through the use of intermarket sweep orders. The New Plan incorporates certain concepts of Regulation NMS[7] which, among other things, addresses trade-throughs in the equity market. The Participants further note that the New Plan also requires its participants to conduct surveillance of their markets to ascertain the effectiveness of these policies and procedures.[8] Finally, the New Plan contains provisions requiring its participants to establish, maintain and enforce written rules addressing locked and crossed markets.[9] The Participants believe that the New Plan will fully accomplish the same goals of the Linkage Plan, including imposing limits on trade-throughs.

III. Discussion

After careful consideration, the Commission finds that the proposed Amendments to the Linkage Plan are consistent with the requirements of the Act and the rules and regulations thereunder.[10] Specifically, the Commission finds that the Amendments are consistent with Section 11A of the Act[11] and Rule 608 of Regulation NMS thereunder[12] in that they are necessary or appropriate in the public interest, for the protection of investors and the maintenance of fair and orderly markets, to remove impediments to, and perfect the mechanisms of, a national market system.

The Commission believes that the New Plan accomplishes, by alternate means, the goals of the Linkage Plan, including the goal of limiting trade-throughs of prices on other exchanges trading the same options classes. The Commission notes that it has approved the rule filings implementing the New Plan submitted by each of the Participants (''Exchange Linkage Rules'') and has found such rules consistent with the requirements of the Act and the New Plan.[13]

The Commission notes that the withdrawal of each Participant will be effective with this approval of the Amendments. In addition, the Commission notes that each of the Exchange Linkage Rules will become effective upon this approval of the Amendments.

IV. Conclusion

It is therefore ordered, pursuant to Section 11A of the Act[14] and Rule 608 thereunder,[15] that the proposed Amendments to the Linkage Plan are approved.

For the Commission, by the Division of Trading and Markets, pursuant to delegated authority.[16]

Florence E. Harmon,

Deputy Secretary.

[FR Doc. E9–21214 Filed 9–2–09; 8:45 am]

BILLING CODE 8010–01–P

[5] *See* Securities Exchange Act Release No. 60405 (July 30, 2009), 74 FR 39362 (August 6, 2009).

[6] Section 5(a)(i) of the New Plan.

[7] *See* Securities Exchange Act Release No. 51808 (June 9, 2005), 70 FR 37496 (June 29, 2005) (File No. S7–10–04); 17 CFR 242.600 *et seq.*

[8] Section 5(a)(ii) of the New Plan.

[9] Section 6 of the New Plan.

[10] In approving the proposed Amendments, the Commission has considered the Amendments' impact on efficiency, competition, and capital formation. 15 U.S.C. 78c(f).

[11] 15 U.S.C. 78k–1.

[12] 17 CFR 242.608.

[13] *See* Securities Exchange Act Release Nos. 60525 (August 18, 2009) (SR–NASDAQ–2009–056); 60526 (August 18, 2009) (SR–NYSEAmex–2009–19); 60527 (August 18, 2009) (SR–NYSEArca–2009–45); 60530 (August 18, 2009) (SR–BX–2009–028); 60550 (August 20, 2009) (SR–Phlx–2009–61); 60551 (August 20, 2009) (SR–CBOE–2009–040); and 60559 (August 21, 2009) (SR–ISE–2009–27).

[14] 15 U.S.C. 78k–1.

[15] 17 CFR 242.608.

[16] 17 CFR 200.30–3(a)(29).

SECURITIES AND EXCHANGE COMMISSION

[Release No. 34–60584; File No. SR–ISE–2009–35]

Self-Regulatory Organizations; International Securities Exchange, LLC; Order Granting Approval of Proposed Rule Change Relating to Qualified Contingent Cross Orders

August 28, 2009.

I. Introduction

On June 15, 2009, the International Securities Exchange, LLC (''Exchange'' or ''ISE'') filed with the Securities and Exchange Commission (''Commission''), pursuant to Section 19(b)(1) of the Securities Exchange Act of 1934 (''Act'')[1] and Rule 19b–4 thereunder,[2] a proposed rule change to provide for Qualified Contingent Cross Orders. The proposed rule change was published for comment in the **Federal Register** on June 26, 2009.[3] The Commission received two comment letters in response to the proposed rule change[4] and a comment response letter from the Exchange.[5] This order grants approval of the proposed rule change.

II. Description of the Proposal

The Exchange is currently a participant in the Plan for the Purpose of Creating and Operating an Intermarket Option Linkage (''Current Plan'').[6] Subject to certain conditions, the Current Plan provides for a limited trade-through[7] exemption for ''block trades'' which are trades that, among other things, consist of 500 or more contracts with a premium value of at least $150,000.[8] The Commission recently approved the Order Protection and Locked/Crossed Market Plan (''New Plan''),[9] which will replace the Current Plan. Unlike the Current Plan, however, the New Plan does not provide an exemption for block trades. The Exchange believes that the loss of the block trade exemption will adversely affect the ability of its members to effect large trades that are tied to stock, and is proposing a new order type, the Qualified Contingent Cross Order,[10] which the Exchange proposes to implement contemporaneously with its New Linkage Rules.

The proposed Qualified Contingent Cross Order would permit an ISE member to cross the options leg of a Qualified Contingent Trade (''QCT'')[11]

[1] 15 U.S.C. 78s(b)(1).

[2] 17 CFR 240.19b–4.

[3] See Securities Exchange Act Release No. 60147 (June 19, 2009), 74 FR 30651 (''Notice'').

[4] *See* letter from Angelo Evangelou, Assistant General Counsel, Chicago Board Options Exchange (''CBOE''), to Elizabeth M. Murphy, Secretary, Commission, dated July 16, 2009 (''CBOE Letter'') and letter from Gerald D. O'Connell, Chief Compliance Officer, Susquehanna International Group, LLP (''SIG''), to Elizabeth M. Murphy, Secretary, Commission, dated August 10, 2009 (''SIG Letter'').

[5] *See* letter from Michael J. Simon, Secretary and General Counsel, ISE, to Elizabeth M. Murphy, Secretary, Commission, dated August 20, 2009 (''ISE Letter'').

[6] *See* Securities Exchange Act Release No. 43086 (July 28, 2000), 65 FR 48023 (August 4, 2000) (File No. 4–429).

[7] A trade-through is a transaction in a given options series at a price that is inferior to the best price available in the market (''Trade-Through''). *See* Section 2(21) of the New Plan and Section 2(29) of the Current Plan.

[8] Current Plan Section 2(3) and 8(c)(i)(C).

[9] *See* Securities Exchange Act Release No. 60405 (July 30, 2009), 74 FR 39362 (August 6, 2009) (File No. 4–546). The Exchange has also proposed revisions to its rules to implement the New Plan (''New Linkage Rules''). *See* Securities Exchange Act Release No. 60559 (August 21, 2009), 74 FR 44425 (August 28, 2009) (SR–ISE–2009–27).

[10] Proposed ISE Rule 715(j), proposed Supplementary Material .01 to ISE Rule 715, and proposed ISE Rule 721(b).

[11] A Qualified Contingent Trade is a transaction consisting of two or more component orders,

Continued

on ISE immediately upon entry if the order is: (i) For at least 500 contracts; (ii) part of a QCT; and (iii) executed at a price at or between the national best bid or offer (''NBBO'').[12] Proposed Supplementary Material .01 to ISE Rule 715 defines a QCT as a transaction composed of two or more orders, executed as agent or principal, where: (i) At least one component is in an NMS stock; (ii) all components are effected with a product or price contingency that either has been agreed to by all the respective counterparties or arranged for by a broker-dealer as principal or agent; (iii) the execution of one component is contingent upon the execution of all other components at or near the same time; (iv) the specific relationship between the component orders (*e.g.,* the spread between the prices of the component orders) is determined by the time the contingent order is placed; (v) the component orders bear a derivative relationship to one another, represent different classes of shares of the same issuer, or involve the securities of participants in mergers or with intentions to merge that have been announced or cancelled; and (vi) the transaction is fully hedged (without regard to any prior existing position) as a result of other components of the contingent trade.[13]

The Exchange represents that it will adopt policies and procedures to ensure that its members use the Qualified Contingent Cross Order properly, including requiring them to properly mark such orders and instituting surveillance procedures to identify that the member executed the stock leg of the transaction at or near the same time as the options leg.

III. Discussion and Commission Findings

After careful review, the Commission finds that the proposed rule change is consistent with the requirements of the Act and the rules and regulations thereunder applicable to a national securities exchange and, in particular, with Section 6(b) of the Act.[14] Specifically, the Commission finds that the proposal is consistent with Section 6(b)(5) of the Act,[15] which requires, among other things, that the rules of a national securities exchange be designed to promote just and equitable principles of trade, to remove impediments to and perfect the mechanism of a free and open market and a national market system, and, in general, to protect investors and the public interest. In addition, the Commission finds that the proposed rule change is consistent with Section 11A(a)(1)(C) of the Act,[16] in which Congress found that it is in the public interest and appropriate for the protection of investors and the maintenance of fair and orderly markets to assure, among other things, the economically efficient execution of securities transactions.

In 2006, the Commission provided an exemption from Rule 611(a) of Regulation NMS for each NMS stock component of contingent trades that satisfied the six requirements for ''qualified contingent trades'' (''NMS QCT Exemption'').[17] Pursuant to the Commission's exemption, trade-throughs caused by the execution of orders involving one or more NMS stocks that are components of a QCT are permitted. The Commission stated that QCT transactions that meet the specified requirements could be useful trading tools for investors and other market participants, and could be of benefit to the market as a whole, contributing to the efficient functioning of the securities markets and the price discovery process.[18]

As a result of the loss of the Trade-Through exemption for block trades that is available under the Current Plan, but not available under the New Plan, the Exchange has proposed the Qualified Contingent Cross Order, which it believes is necessary to facilitate the execution of large-sized stock-option orders. In particular, the Exchange stated that this proposed Qualified Contingent Cross Order is needed when the components of a stock-option are executed in separate markets, rather than as a package on options exchanges.[19] The Exchange's proposal would provide for a new order type, the Qualified Contingent Cross Order, that would permit a cross of the options leg of a stock-option order that, among other things, met each of the six requirements of the NMS QCT Exemption.

In its comment letter,[20] CBOE asserted that the ISE proposal is misleading and has no relevance to the Trade-Through requirements of the New Plan because the proposed Qualified Contingent Cross Order would not violate the NBBO and therefore would not be in conflict with the New Plan. CBOE further questioned ISE's concern over losing the Trade-Through exemption for block trades. In particular, CBOE noted that, as with the Current Plan, the New Plan contains a Trade-Through exception for stock-option orders that are represented at a net price,[21] and that this exception does not even require a 500-contract size minimum. In addition, CBOE noted that the NMS QCT Exemption, which CBOE believes only applies ''to stock-option trades negotiated and represented as a package,'' is also available to ISE members. Given these available alternatives, CBOE opined that it fails to follow ISE's statement that the proposal would ''provide customers with the flexibility needed to achieve their investment objectives.''

ISE responded to CBOE's comments by affirming the close relationship between its proposal and the implementation of the New Plan because the New Plan does not contain the block trade exemption of the Current Plan. ISE stated the absence of a block trade exemption would make it very difficult for the options component of stock-option transactions to be executed without allowing such orders to be executed at a price that matches the NBBO. In particular, the Exchange explained that, for stock-option orders negotiated on a ''net price'' basis where such price reflects the total price of both the stock and options legs, ''the actual execution price of each component is not as material to the parties as is the net price of the transaction.''[22] For a stock-option order in which the stock leg meets the requirements of the NMS QCT Exemption, ISE noted that the stock leg can be executed at any price which in turn permits flexibility in the pricing of the options component as well, including allowing the options leg

executed as agent or principal, that satisfy the six elements in the Commission's order exempting QCTs from the requirements of Rule 611(a) of Regulation NMS under the Act (''Regulation NMS''), which requires trading centers to establish, maintain, and enforce written policies and procedures that are reasonably designed to prevent trade-throughs. *See* Securities Exchange Act Release No. 57620 (April 4, 2008) 73 FR 19271 (April 9, 2008) (''QCT Release''). *See also* Securities Exchange Act Release No. 54389 (August 31, 2006), 71 FR 52829 (September 7, 2006).

[12] Qualified Contingent Cross Orders will be automatically canceled if they cannot be executed. Proposed ISE Rule 721(b)(1).

[13] These requirements are substantively identical to those in the QCT Release, *supra* note 11.

[14] 15 U.S.C. 78f(b). In approving this proposed rule change, the Commission has considered the proposed rule's impact on efficiency, competition, and capital formation. *See* 15 U.S.C. 78c(f).

[15] 15 U.S.C. 78f(b)(5).

[16] 15 U.S.C. 78k–1(a)(1)(C).

[17] *See supra* note 11.

[18] *See* QCT Release, *supra* note 11 at 19273.

[19] Both the Current Plan and New Plan include a Trade-Through exception for ''complex trades,'' including stock-option orders represented as a package on options exchanges. *See* Section 8(c)(iii)(G) of the Current Plan and Section 5(b)(viii) of the New Plan.

[20] *See* CBOE Letter, *supra* note 4.

[21] *i.e.,* the complex trade exception. *See supra* note 19.

[22] *See* ISE Letter, *supra* note 5.

to be priced between the Exchange's BBO. However, ISE noted that when its quotation spread was at the minimum increment, the options component would not be able to trade at a price between the ISE BBO. ISE also believed that its proposed Qualified Contingent Cross Order is more limited than the block trade exemption available under the Current Plan because trades would not be permitted to Trade-Through other markets, and would be limited to orders that meet the requirements of the NMS QCT Exemption.

In addition, the Exchange disputed CBOE's assertion that the NMS QCT Exemption applied only to ''stock-option trades negotiated and represented as a package,'' noting that the NMS QCT Exemption contained no such limitation. Instead, the Exchange stated that stock-option orders, including those exempted from Rule 611(a) of Regulation NMS as qualified contingent trades under the NMS QCT Exemption, are regularly effected in the options markets ''without ever representing the legs together as one trade on an options exchange.'' The Commission agrees with the Exchange that the application of the NMS QCT Exemption to stock-option trades is not limited to those negotiated and represented as a package. So long as a transaction meets the six specified elements of the NMS QCT Exemption, the exemption is available for use by a trading center.

In its comment letter,[23] SIG stated that, if ISE's proposal were to be approved such that options legs of stock-option orders could be effected as clean option crosses without auction or exposure and ahead of other orders on ISE's book, the net result would be that customers would have little assurance that their stock-option orders are effected competitively or receive best execution prices. SIG, noting that ISE's proposal is modeled off of the NMS QCT Exemption, sought to provide context for which the Regulation NMS exemption was originally sought by the Securities Industry Association (''SIA'') (n/k/a SIFMA).[24] SIG stated that SIA's exemption request presumed that the stock-option net price would be subject to competition (*i.e.,* through the options markets) even if the stock leg were not, though it acknowledges that the Qualified Contingent Trade exemption provided by the Commission under Regulation NMS does not require exposure of such orders as a net trade. If it was envisioned that stock-option orders could be effected pursuant to ISE's proposal, ''with the stock leg at a trade-through price and the option leg at a book-priority price that was never exposed or auctioned,'' SIG believed that ''the conclusion would probably have been that there would be insufficient price discovery to merit an exemption for the stock leg.'' As such, SIG believed that ISE's proposal would strip away the price protections afforded by the options markets for stock-option orders and would result in their executions at non-competitive prices.[25]

As discussed above, the application of the NMS QCT Exemption to stock-option trades is not limited to those negotiated and represented as a package. In response to SIG, ISE also noted that the SIA's exemption request was focused solely on the need for trade-through relief for the NMS stock components of QCTs. In addition, ISE pointed out that, at the time the Commission granted the NMS QCT Exemption, every option leg of a stock-option transaction of 500 contracts or more was also exempt from trade-through liability based on the application of the Current Plan's block trade exemption. Accordingly, although an option leg of a stock-option QCT would not have had an exception from exchange priority rules, block-sized transactions would have been permitted to trade-through the NBBO. ISE's Qualified Contingent Cross Order, by contrast, would provide intermarket price protection by trading at a price no worse than the NBBO, but would be excepted from intramarket priority rules.

CBOE also argued against the proposal because it believed that the Qualified Contingent Cross Order would be the first time that an options market would be permitted to cross orders ''without exposure to market participants and ahead of resting public customer orders,'' which CBOE argued would be ''a significant departure from the established practice of auction and exposure in the options industry.'' CBOE believed that the Exchange's proposal would disadvantage resting public customer orders, including large-sized public customer orders, and would be harmful to options market structure.[26]

In response to this argument, ISE stated that customer orders on its book would not be disadvantaged because they would not be bidding and offering for the contingent trade that is being executed. ISE disputed CBOE's view of the execution of Qualified Contingent Cross Orders as ''trading ahead'' of customers on its book, and disagreed with what it believed CBOE implied, that an exchange must either maintain customer priority in all circumstances or adopt a market structure that does not provide customer priority in any circumstance, noting that CBOE's own rules permit the execution of one leg of a complex order at the same price as public customers on its book when another leg is executed at an improved price.

The Commission agrees with CBOE that the Exchange's proposal would represent a change in certain long-held principles in the options markets because it would permit the execution of a cross order without requiring exposure or customer priority. The Commission continues to believe that exposure and customer priority play an important role in ensuring competition and price discovery in the options markets. At the same time, as discussed above, the Commission also continues to believe that qualified contingent trades that satisfy the requirements of the NMS QCT Exemption can benefit the market as a whole and contribute to the efficient functioning of the securities markets and the price discovery process.[27] The Commission believes that the Exchange's proposal to establish a limited exception to priority and exposure principles is consistent with the Act because it is limited solely to the options legs of stock-option orders that: (1) Satisfy the requirements of the NMS QCT Exemption; (2) are for a size of at least 500 contracts; and (3) are executed at or better than the NBBO.

In its comment letter, CBOE also stated that, while there might be a time and place to discuss special handling treatment for extremely large option orders, such standards should ''be considered in a transparent and measured manner with input from all industry participants (as opposed to via a rule filing pretending to adopt some linkage-related functionality).'' In this regard, the Commission notes that the proposal was published for public comment as required under Section

[23] *See* SIG Letter, *supra* note 4.

[24] Letter to Nancy M. Morris, Secretary, Commission, from Andrew Madoff, SIA Trading Committee, SIA, dated June 21, 2006 (''SIA QCT Letter'').

[25] SIG also asserted that SIA only requested trade-through relief for one component order of a contingent trade (at least where there are only two legs involved). The Commission notes that the NMS QCT Exemption provides an exemption from Rule 611(a) for any, and not just one, Trade-Through that results from an execution of an order involving one or more NMS stocks that are components of a qualified contingent trade. *See* QCT Release, *supra* note 11.

[26] *See* CBOE Letter, *supra* note 4.

[27] *See* QCT Release *supra* note 11.

19(b) of the Act[28] and the rules thereunder, and that the Commission has received and considered the comments of those industry participants that sought to provide input regarding the proposal, including CBOE, a competitor of the Exchange, as well as SIG, a large participant in the options market.

The Commission believes that the Exchange's proposed new Qualified Contingent Cross Order is consistent with the Act, and will allow Exchange members to retain the flexibility needed to utilize the Commission's NMS QCT Exemption for qualified stock-option transactions that are not presented as a package on an options exchange, but instead where the options and stock components are executed in separate markets. As noted above, the Commission believes that contingent trades that meet the requirements of the NMS QCT Exemption may be useful trading tools for investors and other market participants, and may be of benefit to the market as a whole, contributing to the efficient functioning of the securities markets and the price discovery process.[29] The Commission believes that, given the NMS QCT Exemption, the Exchange's proposal is consistent with the Act in that it seeks to address the execution of stock-option orders whose legs are executed separately rather than as a package while limiting such orders to QCTs with a size of at least 500 contracts that are executed at or between the NBBO.[30]

In approving the proposed rule change, the Commission notes the Exchange's representation that it will adopt policies and procedures to ensure that its members use the proposed order type properly, including requiring members to mark all Qualified Contingent Cross Orders as such. In addition, ISE has represented that it will implement surveillance procedures to identify that the member executed the stock leg of the stock-option transaction at or near the same time as the options leg. The Commission emphasizes that these are important measures that should help ensure that the proposed order type is employed properly.

[28] 15 U.S.C. 78s(b).

[29] *See* QCT Release, *supra* note 11 and accompanying text.

[30] The Commission notes that an original single-sided customer order would not otherwise constitute a multi-component, fully hedged trade for purposes of ISE's proposed Qualified Contingent Cross Order solely by virtue of being hedged by the member representing the order. In such a case, the Commission does not believe that the execution of the options leg would qualify for the proposed Qualified Contingent Cross Order.

IV. Conclusion

It is therefore ordered, pursuant to Section 19(b)(2) of the Act,[31] that the proposed rule changes (SR–ISE–2009–35) be, and hereby is, approved.

For the Commission, by the Division of Trading and Markets, pursuant to delegated authority.[32]

Florence E. Harmon,

Deputy Secretary.

[FR Doc. E9–21223 Filed 9–2–09; 8:45 am]

BILLING CODE 8010–01–P

[31] 15 U.S.C. 78s(b)(2).

[32] 17 CFR 200.30–3(a)(12).

SECURITIES AND EXCHANGE COMMISSION

[Release No. 34–60578; File No. SR–Phlx–2009–72]

Self-Regulatory Organizations; Notice of Filing and Immediate Effectiveness of Proposed Rule Change by NASDAQ OMX PHLX, Inc. Relating to the Option Floor Broker Subsidy and Other Clarifying Changes to the Fee Schedule

August 27, 2009.

Pursuant to Section 19(b)(1) of the Securities Exchange Act of 1934,[1] notice is hereby given that on August 25, 2009, NASDAQ OMX PHLX, Inc. (''Phlx'' or the ''Exchange'') filed with the Securities and Exchange Commission (''Commission'') the proposed rule change as described in Items I, II, and III below, which Items have been prepared by the Phlx. The Commission is publishing this notice to solicit comments on the proposed rule change from interested parties.

I. Self-Regulatory Organization's Statement of the Terms of Substance of the Proposed Rule Change

The Exchange proposes to amend the calculation for the Options Floor Broker Subsidy with respect to waiver of transaction fees for firm facilitation transactions.

Additionally, the Exchange proposes to make other clarifying changes to the fee schedule.

While changes to the Exchange's fee schedule pursuant to this proposal are effective upon filing, the Exchange has designated this proposal to be effective for trades settling on or after September 1, 2009.

The text of the proposed rule change is available on the Exchange's Web site at *http://nasdaqomxphlx.cchwallstreet.com/NASDAQOMXPHLX/Filings/*, at the principal office of the Exchange, and at the Commission's Public Reference Room.

II. Self-Regulatory Organization's Statement of the Purpose of, and Statutory Basis for, the Proposed Rule Change

In its filing with the Commission, Phlx included statements concerning the purpose of and basis for the proposed rule change and discussed any comments it received on the proposed rule change. The text of these statements may be examined at the places specified in Item IV below. The Phlx has prepared summaries, set forth in sections A, B, and C below, of the most significant aspects of such statements.

A. Self-Regulatory Organization's Statement of the Purpose of, and Statutory Basis for, the Proposed Rule Change

1. Purpose

The purpose of the proposed rule change is to attract additional order flow to the Exchange. The Exchange proposes to modify the Options Floor Broker Subsidy calculation. The Exchange currently pays an Options Floor Broker Subsidy to member organizations with Exchange registered floor brokers for eligible contracts that are entered into the Exchange's Options Floor Broker Management System (''FBMS'').[2] To qualify for the per contract subsidy, a member organization with Exchange registered floor brokers must have: (1) More than an average of 100,000 executed contracts per day in the applicable month; and (2) at least 40,000 executed contracts or more per day for at least eight trading days during that same month.[3] Only the floor broker volume from orders entered into FBMS and subsequently executed on the Exchange would be counted. The 100,000 contract and 40,000 contract thresholds, as described above, would be calculated per member organization floor brokerage unit. In the event that two or more member organizations with Exchange registered floor brokers each entered one side of a transaction into FBMS, then the executed contracts would be divided among each

[1] 15 U.S.C. 78s(b)(1).

[2] FBMS is designed to enable floor brokers and/or their employees to enter, route, and report transactions stemming from options orders received on the Exchange. FBMS also is designed to establish an electronic audit trail for options orders represented and executed by floor brokers on the Exchange. *See* Exchange Rule 1080, commentary .06.

[3] For purposes of calculating the 100,000 and 40,000 thresholds, customer-to-customer transactions, customer-to-non-customer transactions, and non-customer-to-non-customer transactions would be included.

qualifying member organization that participates in that transaction. In order to be eligible for the Options Floor Broker Subsidy, the member organization must have an average daily volume in a particular calendar month as follows:

PER CONTRACT AVERAGE DAILY VOLUME SUBSIDY PAYMENT

Tier I	Tier II	Tier III
100,001 to 200,000. $0.04 per contract.	200,001 to 300,000. $0.05 per contract.	300,001 and greater. $0.06 per contract.

Currently, the following types of transactions apply to calculating the Options Floor Broker Subsidy:

• Customer-to-customer executions will count towards reaching the 100,000 contract and 40,000 contract thresholds, but a per contract subsidy will not be paid on any customer-to-customer executions.

• Orders entered through FBMS but executed away through Linkage, as well as dividend, merger and short stock interest strategies will not count towards the 100,000 contract or the 40,000 contract thresholds nor will a per contract subsidy be paid on these transactions.

• Only the largest component of a Complex Order (*i.e.*, the component that includes the greatest number of contracts) will count towards the 100,000 contract and the 40,000 contract thresholds. The Options Floor Broker Subsidy does not apply to any contracts that are executed as part of a Complex Order.

For the purposes of calculating the Options Floor Broker Subsidy, the Exchange proposes to treat firm facilitation transactions, executed pursuant to Exchange Rule 1064,[4] in the same manner as fees are assessed for customer-to-customer executions. The Exchange believes that this amendment to the Options Floor Broker subsidy calculation is consistent with the recent waiver of the Firm Proprietary Options Transaction Charge on firm facilitation transactions.[5] The volume for firm facilitation transactions would count toward reaching the 100,000 and 40,000 contract thresholds, but a per contract subsidy will not be paid on any firm facilitation transaction. A facilitation occurs when a floor broker holds an options order for a public customer and a contra-side order for the same option series and, after providing an opportunity for all persons in the trading crowd to participate in the transaction, executes both orders as a facilitation cross.[6]

The Exchange also proposes other clarifying technical amendments to the fee schedule. The Exchange recently updated the fee schedule[7] and amended certain footnotes in the fee schedule and replaced them with endnotes. It was previously noted in the fee schedule that payment for order flow fees would be assessed on transactions resulting from customer orders and are available to be disbursed by the Exchange according to the instructions of the specialist units/specialists or Directed ROTs to order flow providers who are members or member organizations, who submit, as agent, customer orders to the Exchange or non-members or non-member organizations who submit, as agent, customer orders to the Exchange through a member or member organization who is acting as agent for those customer orders. This language was inadvertently removed from the previous fee schedule when the fee schedule was reformatted,[8] however, payment for order flow fees have and continue to be assessed on transactions resulting from customer orders.[9] The Exchange proposes adding the following language back into the fee schedule to further clarify the payment for order flow fees: ''Payment for order flow fees will be assessed on transactions resulting from customer orders.'' Also, for purposes of consistency, the Exchange proposes amending all references to Phlx in the fee schedule to be ''PHLX'' and adding appropriate trademark references.

2. Statutory Basis

The Exchange believes that its proposal to amend its schedule of fees is consistent with Section 6(b) of the Act[10] in general, and furthers the objectives of Section 6(b)(4) of the Act[11] in particular, in that it is an equitable allocation of reasonable fees and other charges among Exchange members. Pursuant to this proposal, all member organizations registered as floor brokers are offered the continued opportunity to receive a subsidy. By allowing for a subsidy, the Exchange believes that floor brokers will be encouraged to send additional orders to the Exchange for execution. The Exchange also proposes a few technical changes to clarify the language in the fee schedule.

B. Self-Regulatory Organization's Statement on Burden on Competition

The Exchange does not believe that the proposed rule change will impose any burden on competition not necessary or appropriate in furtherance of the purposes of the Act.

C. Self-Regulatory Organization's Statement on Comments on the Proposed Rule Change Received From Members, Participants or Others

No written comments were either solicited or received.

III. Date of Effectiveness of the Proposed Rule Change and Timing for Commission Action

Because the foregoing rule change establishes or changes a due, fee, or other charge imposed by the Exchange, it has become effective pursuant to Section 19(b)(3)(A) of the Act[12] and subparagraph (f)(2) of Rule 19b–4[13]

[4] A Floor Broker holding an options order for a public customer and a contraside order may cross such orders in accordance with paragraph (a) above or may execute such orders as a facilitation cross in the following manner: (i) The Floor Broker or his employees must enter the appropriate notation onto the Options Floor Broker Management System for the public customer's order, together with all of the terms of the order, including any contingency involving other options or the underlying or related securities. (ii) The Floor Broker shall request markets for the execution of all options components of the order. After providing an opportunity for such markets to be made, the Floor Broker shall announce that he holds an order subject to facilitation and shall bid (or offer) in between the market for each options component and disclose all terms and conditions of the order including all securities which are components of the order. (iii) After all market participants in the crowd are given a reasonable opportunity to accept all terms and conditions made on behalf of the public customer whose order is subject to facilitation, the Floor Broker may immediately thereafter cross all or any remaining part of such order and the facilitation order at each customer's bid or offer by announcing by public outcry that he is crossing and by stating the quantity and price(s). Once a Floor Broker has announced an order as subject to facilitation and has established a bid (or offer) in between the market for the option(s) to be facilitated, the order cannot be broken up by a subsequent superior bid or offer for just one component to the facilitated order. See Exchange Rule 1064(b).

[5] *See* Securities Exchange Act Release No. 60477 (August 11, 2009), 74 FR 41777 (August 18, 2009) (SR–Phlx–2009–67).

[6] *See* Exchange Rule 1064.

[7] *See* Securities Exchange Act Release No. 59402 (February 13, 2009), 74 FR 8134 (February 23, 2009) (SR–Phlx–2009–08) (amending and reformatting the existing NASDAQ OMX PHLX Fee Schedule).

[8] *See* Securities Exchange Act Release No. 59402 (February 13, 2009), 74 FR 8134 (February 23, 2009) (SR–Phlx–2009–08).

[9] The program took effect on July 1, 2005. *See e.g.*, Securities Exchange Act Release Nos.; 57851 (May 22, 2008), 73 FR 31177 (May 30, 2008) (SR–Phlx–2008–38); 55891 (June 11, 2007), 72 FR 333271 (June 15, 2007) (SR–Phlx–2007–39); 53754 (May 3, 2006), 71 FR 27301 (May 10, 2006) (SR–Phlx–2006–25); 53078 (January 9, 2006), 71 FR 2289 (January 13, 2006) (SR–Phlx–2005–88); 52568 (October 6, 2005), 70 FR 60120 (October 14, 2005) (SR–Phlx–2005–58); and 52114 (July 22, 2005), 70 FR 44138 (August 1, 2005) (SR–Phlx–2005–44).

[10] 15 U.S.C. 78f(b).

[11] 15 U.S.C. 78f(b)(4).

[12] 15 U.S.C. 78s(b)(3)(A).

[13] 17 CFR 240.19b–4(f)(2).

thereunder. At any time within 60 days of the filing of the proposed rule change, the Commission may summarily abrogate such rule change if it appears to the Commission that such action is necessary or appropriate in the public interest, for the protection of investors, or otherwise in furtherance of the purposes of the Act.

IV. Solicitation of Comments

Interested persons are invited to submit written data, views, and arguments concerning the foregoing, including whether the proposed rule change is consistent with the Act. Comments may be submitted by any of the following methods:

Electronic Comments

- Use the Commission's Internet comment form (*http://www.sec.gov/rules/sro.shtml*); or
- Send an e-mail to *rule-comments@sec.gov.* Please include File Number SR–Phlx–2009–72 on the subject line.

Paper Comments

- Send paper comments in triplicate to Elizabeth M. Murphy, Secretary, Securities and Exchange Commission, 100 F Street, NE., Washington, DC 20549–1090.

All submissions should refer to File Number SR–Phlx–2009–72. This file number should be included on the subject line if e-mail is used. To help the Commission process and review your comments more efficiently, please use only one method. The Commission will post all comments on the Commission's Internet Web site (*http://www.sec.gov/rules/sro.shtml*). Copies of the submission, all subsequent amendments, all written statements with respect to the proposed rule change that are filed with the Commission, and all written communications relating to the proposed rule change between the Commission and any person, other than those that may be withheld from the public in accordance with the provisions of 5 U.S.C. 552, will be available for inspection and copying in the Commission's Public Reference Room, 100 F Street, NE., Washington, DC 20549, on official business days between the hours of 10 a.m. and 3 p.m. Copies of the filing also will be available for inspection and copying at the principal office of Phlx. All comments received will be posted without change; the Commission does not edit personal identifying information from submissions. You should submit only information that you wish to make available publicly. All submissions should refer to File Number SR–Phlx–2009–72 and should be submitted on or before September 24, 2009.

For the Commission, by the Division of Trading and Markets, pursuant to delegated authority.[14]

Florence E. Harmon,

Deputy Secretary.

[FR Doc. E9–21222 Filed 9–2–09; 8:45 am]

BILLING CODE 8010–01–P

[14] 17 CFR 200.30–3(a)(12).

DEPARTMENT OF STATE

[Public Notice 6756]

Culturally Significant Objects Imported for Exhibition Determinations: ''Sacred Spain: Art and Belief in the Spanish World''

SUMMARY: Notice is hereby given of the following determinations: Pursuant to the authority vested in me by the Act of October 19, 1965 (79 Stat. 985; 22 U.S.C. 2459), Executive Order 12047 of March 27, 1978, the Foreign Affairs Reform and Restructuring Act of 1998 (112 Stat. 2681, *et seq.*; 22 U.S.C. 6501 note, *et seq.*), Delegation of Authority No. 234 of October 1, 1999, Delegation of Authority No. 236 of October 19, 1999, as amended, and Delegation of Authority No. 257 of April 15, 2003 [68 FR 19875], I hereby determine that the objects to be included in the exhibition ''Sacred Spain: Art and Belief in the Spanish World,'' imported from abroad for temporary exhibition within the United States, are of cultural significance. The objects are imported pursuant to loan agreements with the foreign owners or custodians. I also determine that the exhibition or display of the exhibit objects at the Indianapolis Museum of Art, Indianapolis, IN, from on or about October 11, 2009, until on or about January 3, 2010, and at possible additional exhibitions or venues yet to be determined, is in the national interest. Public Notice of these Determinations is ordered to be published in the **Federal Register**.

FOR FURTHER INFORMATION CONTACT: For further information, including a list of the exhibit objects, contact Carol B. Epstein, Attorney-Adviser, Office of the Legal Adviser, U.S. Department of State (telephone: 202/632–6473). The address is U.S. Department of State, SA–5, L/PD, Fifth Floor, Washington, DC 20522–0505.

Dated: August 27, 2009.

Maura M. Pally,

Deputy Assistant Secretary for Professional and Cultural Exchanges, Bureau of Educational and Cultural Affairs, Department of State.

[FR Doc. E9–21308 Filed 9–2–09; 8:45 am]

BILLING CODE 4710–05–P

DEPARTMENT OF STATE

[Public Notice 6754]

Culturally Significant Objects Imported for Exhibition Determinations: ''Playing With Pictures: The Art of Victorian Photocollage''

SUMMARY: Notice is hereby given of the following determinations: Pursuant to the authority vested in me by the Act of October 19, 1965 (79 Stat. 985; 22 U.S.C. 2459), Executive Order 12047 of March 27, 1978, the Foreign Affairs Reform and Restructuring Act of 1998 (112 Stat. 2681, *et seq.*; 22 U.S.C. 6501 note, *et seq.*), Delegation of Authority No. 234 of October 1, 1999, Delegation of Authority No. 236 of October 19, 1999, as amended, and Delegation of Authority No. 257 of April 15, 2003 [68 FR 19875], I hereby determine that the objects in the exhibition: ''Playing with Pictures: The Art of Victorian Photocollage,'' imported from abroad for temporary exhibition within the United States, are of cultural significance. The objects are imported pursuant to loan agreements with the foreign owners or custodians. I also determine that the exhibition or display of the exhibit objects at The Art Institute of Chicago, Chicago, IL, from on or about October 10, 2009, until on or about January 3, 2010, The Metropolitan Museum of Art, New York, NY, from on or about February 2, 2010, until on or about May 9, 2010, and at possible additional exhibitions or venues yet to be determined, is in the national interest. Public Notice of these Determinations is ordered to be published in the **Federal Register**.

FOR FURTHER INFORMATION CONTACT: For further information, including a list of the exhibit objects, contact Julie Simpson, Attorney-Adviser, Office of the Legal Adviser, U.S. Department of State (telephone: 202–632–6467). The address is U.S. Department of State, L/PD, SA–5, 2200 C Street, NW., Suite 5H03, Washington, DC 20522–0505.

Dated: August 28, 2009.

Maura M. Pally,

Deputy Assistant Secretary for Professional and Cultural Exchanges, Bureau of Educational and Cultural Affairs, Department of State.

[FR Doc. E9–21316 Filed 9–2–09; 8:45 am]

BILLING CODE 4710–05–P

DEPARTMENT OF STATE

[Public Notice 6751]

Culturally Significant Objects Imported for Exhibition Determinations: ''Drawings by Rembrandt and His Pupils: Telling the Difference''

SUMMARY: Notice is hereby given of the following determinations: Pursuant to the authority vested in me by the Act of October 19, 1965 (79 Stat. 985; 22 U.S.C. 2459), Executive Order 12047 of March 27, 1978, the Foreign Affairs Reform and Restructuring Act of 1998 (112 Stat. 2681, *et seq.;* 22 U.S.C. 6501 note, *et seq.*), Delegation of Authority No. 234 of October 1, 1999, Delegation of Authority No. 236 of October 19, 1999, as amended, and Delegation of Authority No. 257 of April 15, 2003 [68 FR 19875], I hereby determine that the objects in the exhibition: ''Drawings by Rembrandt and His Pupils: Telling the Difference,'' imported from abroad for temporary exhibition within the United States, are of cultural significance. The objects are imported pursuant to loan agreements with the foreign owners or custodians. I also determine that the exhibition or display of the exhibit objects at The J. Paul Getty Museum, Los Angeles, CA, from on or about December 8, 2009, until on or about February 28, 2010, and at possible additional exhibitions or venues yet to be determined, is in the national interest. Public Notice of these Determinations is ordered to be published in the **Federal Register**.

FOR FURTHER INFORMATION CONTACT: For further information, including a list of the exhibit objects, contact Julie Simpson, Attorney-Adviser, Office of the Legal Adviser, U.S. Department of State (*telephone:* 202–632–6467). The address is U.S. Department of State, L/PD, SA–5, 2200 C Street, NW., Suite 5H03, Washington, DC 20522–0505.

Dated: August 28, 2009.

Maura M. Pally,

Deputy Assistant Secretary for Professional and Cultural Exchanges, Bureau of Educational and Cultural Affairs, Department of State.

[FR Doc. E9–21314 Filed 9–2–09; 8:45 am]

BILLING CODE 4710–05–P

DEPARTMENT OF STATE

[Public Notice 6752]

Culturally Significant Objects Imported for Exhibition Determinations: ''Paul Gauguin: Paris, 1889''

SUMMARY: Notice is hereby given of the following determinations: Pursuant to the authority vested in me by the Act of October 19, 1965 (79 Stat. 985; 22 U.S.C. 2459), Executive Order 12047 of March 27, 1978, the Foreign Affairs Reform and Restructuring Act of 1998 (112 Stat. 2681, *et seq.*; 22 U.S.C. 6501 note, *et seq.*), Delegation of Authority No. 234 of October 1, 1999, Delegation of Authority No. 236 of October 19, 1999, as amended, and Delegation of Authority No. 257 of April 15, 2003 [68 FR 19875], I hereby determine that the objects in the exhibition: ''Paul Gauguin: Paris, 1889,'' imported from abroad for temporary exhibition within the United States, are of cultural significance. The objects are imported pursuant to loan agreements with the foreign owners or custodians. I also determine that the exhibition or display of the exhibit objects at The Cleveland Museum of Art, Cleveland, OH, from on or about October 4, 2009, until on or about January 18, 2010, and at possible additional exhibitions or venues yet to be determined, is in the national interest. Public Notice of these Determinations is ordered to be published in the **Federal Register**.

FOR FURTHER INFORMATION CONTACT: For further information, including a list of the exhibit objects, contact Julie Simpson, Attorney-Adviser, Office of the Legal Adviser, U.S. Department of State (telephone: 202–632–6467). The address is U.S. Department of State, L/PD, SA–5, 2200 C Street, NW., Suite 5H03, Washington, DC 20522–0505.

Dated: August 27, 2009.

Maura M. Pally,

Deputy Assistant Secretary for Professional and Cultural Exchanges, Bureau of Educational and Cultural Affairs, Department of State.

[FR Doc. E9–21313 Filed 9–2–09; 8:45 am]

BILLING CODE 4710–05–P

DEPARTMENT OF STATE

[Public Notice 6755]

Culturally Significant Objects Imported for Exhibition Determinations: ''Mrs. Delany and her Circle''

SUMMARY: Notice is hereby given of the following determinations: Pursuant to the authority vested in me by the Act of October 19, 1965 (79 Stat. 985; 22 U.S.C. 2459), Executive Order 12047 of March 27, 1978, the Foreign Affairs Reform and Restructuring Act of 1998 (112 Stat. 2681, *et seq.*; 22 U.S.C. 6501 note, *et seq.*), Delegation of Authority No. 234 of October 1, 1999, Delegation of Authority No. 236 of October 19, 1999, as amended, and Delegation of Authority No. 257 of April 15, 2003 [68 FR 19875], I hereby determine that the objects in the exhibition: ''Mrs. Delany and her Circle,'' imported from abroad for temporary exhibition within the United States, are of cultural significance. The objects are imported pursuant to loan agreements with the foreign owners or custodians. I also determine that the exhibition or display of the exhibit objects at the Yale Center for British Art, New Haven, CT, from on or about September 24, 2009, until on or about January 3, 2010, and at possible additional exhibitions or venues yet to be determined, is in the national interest. Public Notice of these Determinations is ordered to be published in the **Federal Register**.

FOR FURTHER INFORMATION CONTACT: For further information, including a list of the exhibit objects, contact Julie Simpson, Attorney-Adviser, Office of the Legal Adviser, U.S. Department of State (telephone: 202–632–6467). The address is U.S. Department of State, L/PD, SA–5, 2200 C Street, NW., Suite 5H03, Washington, DC 20522–0505.

Dated: August 28, 2009.

Maura M. Pally,

Deputy Assistant Secretary for Professional and Cultural Exchanges, Bureau of Educational and Cultural Affairs, Department of State.

[FR Doc. E9–21309 Filed 9–2–09; 8:45 am]

BILLING CODE 4710–05–P

DEPARTMENT OF STATE

[Public Notice 6753]

Culturally Significant Objects Imported for Exhibition Determinations: ''Gifts from the Ancestors: Ancient Ivories of Bering Strait''

SUMMARY: Notice is hereby given of the following determinations: Pursuant to the authority vested in me by the Act of October 19, 1965 (79 Stat. 985; 22 U.S.C. 2459), Executive Order 12047 of March 27, 1978, the Foreign Affairs Reform and Restructuring Act of 1998 (112 Stat. 2681, *et seq.*; 22 U.S.C. 6501 note, *et seq.*), Delegation of Authority No. 234 of October 1, 1999, Delegation of Authority No. 236 of October 19, 1999, as amended, and Delegation of Authority No. 257 of April 15, 2003 [68 FR 19875], I hereby determine that the objects in

the exhibition: ''Gifts from the Ancestors: Ancient Ivories of Bering Strait,'' imported from abroad for temporary exhibition within the United States, are of cultural significance. The objects are imported pursuant to loan agreements with the foreign owners or custodians. I also determine that the exhibition or display of the exhibit objects at Princeton University Art Museum, Princeton, NJ, from on or about October 3, 2009, until on or about January 10, 2010, and at possible additional exhibitions or venues yet to be determined, is in the national interest. Public Notice of these Determinations is ordered to be published in the **Federal Register**.

FOR FURTHER INFORMATION CONTACT: For further information, including a list of the exhibit objects, contact Julie Simpson, Attorney-Adviser, Office of the Legal Adviser, U.S. Department of State (telephone: 202–632–6467). The address is U.S. Department of State, L/PD, SA–5, 2200 C Street, NW., Suite 5H03, Washington, DC 20522–0505.

Dated: August 27, 2009.

Maura M. Pally,

Deputy Assistant Secretary for Professional and Cultural Exchanges, Bureau of Educational and Cultural Affairs, Department of State.

[FR Doc. E9–21310 Filed 9–2–09; 8:45 am]

BILLING CODE 4710–05–P

DEPARTMENT OF TRANSPORTATION

Surface Transportation Board

[STB Finance Docket No. 35288]

Energy Solutions, LLC, d.b.a. Heritage Railroad Corporation—Acquisition and Operation Exemption—Heritage Railroad Corporation

Energy Solutions, LLC, d.b.a. Heritage Railroad Corporation (ES), a noncarrier, has filed a verified notice of exemption under 49 CFR 1150.31 to acquire from the United States Department of Energy (DOE), and to operate a rail line approximately 7 miles long between milepost 0.0, at a point of connection with a rail line of Norfolk Southern Railway Company, at Blair, TN, and the end of the line at milepost 7.0, at or near Oak Ridge, TN.[1] This line also includes approximately 3 miles of spur tracks.[2]

The transaction is expected to be consummated on or after September 17, 2009 (30 days after the exemption was filed).

ES certifies that its projected annual revenues as a result of this transaction will not result in ES becoming a Class II or Class I rail carrier. ES further certifies that its projected annual revenues upon becoming a Class III carrier will not exceed $5 million.

Pursuant to the Consolidated Appropriations Act, 2008, Public Law 110–161, section 193, 121 Stat. 1844 (2007), nothing in this decision authorizes the following activities at any solid waste rail transfer facility: Collecting, storing, or transferring solid waste outside of its original shipping container; or separating or processing solid waste (including baling, crushing, compacting, and shredding). The term ''solid waste'' is defined in section 1004 of the Solid Waste Disposal Act, 42 U.S.C. 6903.

If the notice contains false or misleading information, the exemption is void *ab initio.* Petitions to revoke the exemption under 49 U.S.C. 10502(d) may be filed at any time. The filing of a petition to revoke will not automatically stay the effectiveness of the exemption. Petitions to stay must be filed no later than September 10, 2009 (at least 7 days before the exemption becomes effective).

An original and 10 copies of all pleadings, referring to STB Finance Docket No. 35288, must be filed with the Surface Transportation Board, 395 E Street, SW., Washington, DC 20423–0001. In addition, one copy of each pleading must be served on Thomas F. McFarland, Thomas F. McFarland, P.C., 208 South LaSalle Street, Suite 1890, Chicago, IL 60604–1112.

Board decisions and notices are available on our Web site at *http://www.stb.dot.gov.*

Decided: August 28, 2009.

By the Board, Joseph H. Dettmar, Acting Director, Office of Proceedings.

Kulunie L. Cannon,

Clearance Clerk.

[FR Doc. E9–21267 Filed 9–2–09; 8:45 am]

BILLING CODE 4915–01–P

[1] Heritage Railroad Corporation, a wholly owned subsidiary of Community Reuse Organization of East Tennessee, currently operates the line pursuant to a perpetual easement for a railroad right-of-way granted by the DOE. *See Heritage Railroad Corporation—Lease and Operation Exemption—Rail Line of United States Department of Energy*, STB Finance Docket No. 34372 (STB served July 23, 2003).

[2] On August 21, 2009, ES filed a corrected verified notice of exemption stating that there are approximately 3 miles of spur tracks more or less, rather than 7.5 miles as erroneously stated.

DEPARTMENT OF TRANSPORTATION

Federal Motor Carrier Safety Administration

[Docket No. FMCSA–2001–9258; FMCSA–2001–9561; FMCSA–2003–15268; FMCSA–2007–27333]

Qualification of Drivers; Exemption Renewals; Vision

AGENCY: Federal Motor Carrier Safety Administration (FMCSA), DOT.

ACTION: Notice of final disposition.

SUMMARY: FMCSA previously announced its decision to renew the exemptions from the vision requirement in the Federal Motor Carrier Safety Regulations for 20 individuals. FMCSA has statutory authority to exempt individuals from the vision requirement if the exemptions granted will not compromise safety. The Agency has concluded that granting these exemptions will provide a level of safety that will be equivalent to, or greater than, the level of safety maintained without the exemptions for these commercial motor vehicle (CMV) drivers.

FOR FURTHER INFORMATION CONTACT: Dr. Mary D. Gunnels, Director, Medical Programs, (202) 366–4001, *fmcsamedical@dot.gov,* FMCSA, Department of Transportation, 1200 New Jersey Avenue, SE., Room W64–224, Washington, DC 20590–0001. Office hours are from 8:30 a.m. to 5 p.m. Monday through Friday, except Federal holidays.

SUPPLEMENTARY INFORMATION:

Electronic Access

You may see all the comments online through the Federal Document Management System (FDMS) at *http://www.regulations.gov*

Background

Under 49 U.S.C. 31136(e) and 31315, FMCSA may grant an exemption for a 2-year period if it finds ''such exemption would likely achieve a level of safety that is equivalent to, or greater than, the level that would be achieved absent such exemption.'' The statute also allows the Agency to renew exemptions at the end of the 2-year period. The comment period ended on August 17, 2009.

Discussion of Comments

FMCSA received no comments in this proceeding.

Conclusion

The Agency has not received any adverse evidence on any of these drivers that indicates that safety is being compromised. Based upon its evaluation of the 20 renewal applications, FMCSA renews the Federal vision exemptions for Morris R. Beebe, II, James A. Busbin, Jr., Domenic J. Carassai, Fred W. Duran, Bruce E. Hemmer, Steven P. Holden, Russell R. Inlow, Christopher G. Jarvela, Donald L. Jensen, Darrell D. Kropf, Brad L. Mathna, Vincent P. Miller, Warren J. Nyland, Dennis M. Prevas, Greg L. Riles, Robert N. Taylor, Calvin D. Tomlinson, Wesley E. Turner, Mona J. VanKrieken, and Paul S. Yocum.

In accordance with 49 U.S.C. 31136(e) and 31315, each renewal exemption will be valid for 2 years unless revoked earlier by FMCSA. The exemption will be revoked if: (1) The person fails to comply with the terms and conditions of the exemption; (2) the exemption has resulted in a lower level of safety than was maintained before it was granted; or (3) continuation of the exemption would not be consistent with the goals and objectives of 49 U.S.C. 31136 and 31315.

Issued on: August 27, 2009.

Larry W. Minor,

Associate Administrator for Policy and Program Development.

[FR Doc. E9–21196 Filed 9–2–09; 8:45 am]

BILLING CODE 4910–EX–P

DEPARTMENT OF TRANSPORTATION

Surface Transportation Board

[STB Finance Docket No. 35283]

The Indiana Rail Road Company—Trackage Rights Exemption—CSX Transportation, Inc.

Pursuant to a written trackage rights agreement (Agreement),[1] CSX Transportation, Inc. (CSXT), has agreed to grant non-exclusive overhead trackage rights to The Indiana Rail Road Company (INRD) over CSXT's: (1) Indianapolis Belt Subdivision between the connection of INRD with CSXT at CSXT MP QIB 5.3 and the Hoosier Heritage Railroad in the vicinity of CSXT MP QIB 13.5, a distance of approximately 8.2 miles; (2) Hamilton Connection between CSXT MP QIB 9.0, approximately, and the point of INRD's State Street Yard leased property in the vicinity of CSXT's Indianapolis Subdivision MP BD 122.0, a distance of approximately 0.5 miles; (3) Hamilton and Prospect Wye Tracks in the vicinity of CSXT MP QIB 9.0 for the purpose of entry into and exit from CSXT's Hawthorne Yard; (4) Indianapolis Subdivision between Hamilton Connection at CSXT MP BD 122.0 approximately, and CP IU at CSXT MP BD 126.5, a distance of approximately 4.5 miles; (5) Indianapolis Terminal Subdivision between CP IU at CSXT MP QI 283.7 and CP AN at the west end of CSXT's Avon Yard at CSXT MP QS 12.5, a distance of approximately 12.7 miles; (6) Louisville Secondary Subdivision between CSXT MP QSL 4.0 at the connection with Louisville & Indiana Railroad Co. (LIRC) and CSXT MP QSL 0.0, a distance of 4 miles, including use of wye tracks in the northeast and southeast quadrants at CP Dale, and wye tracks in the southeast and southwest quadrants at CP IU; (7) Crawfordsville Branch between CP IJ at CSXT MP QSC 0.7 and the connection to the Indianapolis Terminal Subdivision at CP South Hunt at CSXT MP QSC 8.6, a distance of approximately 7.9 miles; and (8) Shelbyville Secondary Subdivision between the connection with the Indianapolis Belt Subdivision at CSXT MP QSS 106.9 and CP IU at CSXT MP QSS 109.3, a distance of approximately 2.4 miles.

The transaction is scheduled to be consummated on September 18, 2009, or the effective date of the exemption (30 days after the amendment to the notice of exemption was filed), whichever is later. The purpose of the trackage rights agreement is (i) to grant INRD trackage rights which will permit INRD to deliver and retrieve carload haulage traffic to and from LIRC at CSXT's Avon Yard,[2] (ii) to grant INRD trackage rights which will permit it to deliver and retrieve unit train haulage traffic directly to and from LIRC, (iii) to confirm INRD's rights to serve customers in State Street Yard where it operates a plastics transloading facility on track leased from CSXT, and (iv) to revise the commercial terms of an existing trackage rights agreement.[3] According to INRD, the trackage rights granted in the Agreement will permit several routings for INRD's traffic moving to and from Avon Yard for delivery or retrieval of haulage traffic with LIRC, providing CSXT's dispatchers with the greatest flexibility in routing INRD traffic to and from Avon Yard through the congested Indianapolis Terminal area.

As a condition to this exemption, any employees affected by the trackage rights will be protected by the conditions imposed in *Norfolk and Western Ry. Co.—Trackage Rights—BN,* 354 I.C.C. 605 (1978), as modified in *Mendocino Coast Ry., Inc.—Lease and Operate,* 360 I.C.C. 653 (1980).

This notice is filed under 49 CFR 1180.2(d)(7). If the notice contains false or misleading information, the exemption is void *ab initio.* Petitions to revoke the exemption under 49 U.S.C. 10502(d) may be filed at any time. The filing of a petition to revoke will not automatically stay the effectiveness of the exemption. Stay petitions must be filed at least 7 days before the exemption becomes effective.

Pursuant to the Consolidated Appropriations Act, 2008, Public Law 110–161, section 193, 121 Stat. 1844 (2007), nothing in this decision authorizes the following activities at any solid waste rail transfer facility: collecting, storing, or transferring solid waste outside of its original shipping container; or separating or processing solid waste (including baling, crushing, compacting, and shredding). The term ''solid waste'' is defined in section 1004 of the Solid Waste Disposal Act, 42 U.S.C. 6903.

An original and 10 copies of all pleadings, referring to STB Finance Docket No. 35283, must be filed with the Surface Transportation Board, 395 E Street, SW., Washington, DC 20423–0001. In addition, a copy of each pleading must be served on John Broadley, John H. Broadley & Associates, P.C., 1054 31st Street, NW., Suite 200, Washington, DC 20007.

Board decisions and notices are available on our Web site at *http://www.stb.dot.gov.*

Decided: August 27, 2009.

By the Board, Joseph H. Dettmar, Acting Director, Office of Proceedings.

Jeffrey Herzig,

Clearance Clerk.

[FR Doc. E9–21048 Filed 9–2–09; 8:45 am]

BILLING CODE 4915–01–P

[1] As required by 49 CFR 1180.6(a)(7)(ii), INRD states that it will submit a copy of the executed agreement within 10 days of the date the agreement is executed.

[2] INRD notes that it already interchanges traffic with CSXT at Avon Yard pursuant to an interchange agreement between the parties.

[3] *See The Indiana Rail Road Company—Trackage Rights Exemption—Consolidated Rail Corporation,* STB Finance Docket No. 33380 (STB served Apr. 30, 1997).

DEPARTMENT OF THE TREASURY

Office of the General Counsel

Appointment of Members of the Legal Division to the Performance Review Board, Internal Revenue Service

Under the authority granted to me as Chief Counsel of the Internal Revenue Service by the General Counsel of the Department of the Treasury by General Counsel Order No. 21 (Rev. 4), pursuant to the Civil Service Reform Act, I have appointed the following persons to the Legal Division Performance Review Board, Internal Revenue Service Panel:

1. Chairperson, Christopher Sterner, Acting Deputy Chief Counsel (Operations);
2. Roland Barral, Area Counsel (Large and Mid-Size Business);
3. Sara M. Coe, Deputy Division Counsel (Small Business/Self Employed);
4. Alan Tawshunsky, Deputy Division Counsel/Deputy Associate Chief Counsel (Tax Exempt and Government Entities);
5. Deborah A. Butler, Associate Chief Counsel (Procedure and Administration).

This publication is required by 5 U.S.C. 4314(c)(4).

Dated: August 20, 2009.

William J. Wilkins,

Chief Counsel, Internal Revenue Service.

[FR Doc. E9–21259 Filed 9–2–09; 8:45 am]

BILLING CODE 4830–01–P

DEPARTMENT OF THE TREASURY

Internal Revenue Service

Proposed Collection; Comment Request for NOT–111495–09

AGENCY: Internal Revenue Service (IRS), Treasury.

ACTION: Notice and request for comments.

SUMMARY: The Department of the Treasury, as part of its continuing effort to reduce paperwork and respondent burden, invites the general public and other Federal agencies to take this opportunity to comment on proposed and/or continuing information collections, as required by the Paperwork Reduction Act of 1995, Public Law 104–13 (44 U.S.C. 3506(c)(2)(A)). Currently, the IRS is soliciting comments concerning Notice 2009–XX, Credit for Carbon Dioxide Sequestration under Section 45Q.

DATES: Written comments should be received on or before November 2, 2009 to be assured of consideration.

ADDRESSES: Direct all written comments to R. Joseph Durbala, Internal Revenue Service, room 6129, 1111 Constitution Avenue, NW., Washington, DC 20224.

FOR FURTHER INFORMATION CONTACT: Requests for additional information or copies of notice should be directed to Evelyn J. Mack, at (202) 622–7381, or at Internal Revenue Service, room 6129, 1111 Constitution Avenue NW., Washington, DC 20224, or through the internet, at *Evelyn.J.Mack@irs.gov*.

SUPPLEMENTARY INFORMATION:

Title: Manufacturers' Certification of Specified Plug-in Electric Vehicles.

OMB Number: 1545–2150.

Notice Number: NOT–111495–09.

Abstract: The American Recovery and Reinvestment Act of 2009 provides, under section 30 of the Internal Revenue Code, a credit for certain new specified plug-in electric drive vehicles. This notice provides procedures for a vehicle manufacturer to certify that a vehicle meets the statutory requirements for the credit, and to certify the amount of the credit available with respect to the vehicle. The notice also provides guidance to taxpayers who purchase vehicles regarding the conditions under which they may rely on the vehicle manufacturer's certification.

Current Actions: There is no change in the paperwork burden previously approved by OMB. This notice is being submitted for renewal purposes only.

Type of Review: Extension of a currently approved collection.

Affected Public: Business and for-profit.

Estimated Number of Respondents: 10.

Estimated Average Time per Respondent: 10 hrs.

Estimated Total Annual Burden Hours: 250 hrs.

The following paragraph applies to all of the collections of information covered by this notice:

An agency may not conduct or sponsor, and a person is not required to respond to, a collection of information unless the collection of information displays a valid OMB control number. Books or records relating to a collection of information must be retained as long as their contents may become material in the administration of any internal revenue law. Generally, tax returns and tax return information are confidential, as required by 26 U.S.C. 6103.

Request for Comments: Comments submitted in response to this notice will be summarized and/or included in the request for OMB approval. All comments will become a matter of public record. Comments are invited on: (a) Whether the collection of information is necessary for the proper performance of the functions of the agency, including whether the information shall have practical utility; (b) the accuracy of the agency's estimate of the burden of the collection of information; (c) ways to enhance the quality, utility, and clarity of the information to be collected; (d) ways to minimize the burden of the collection of information on respondents, including through the use of automated collection techniques or other forms of information technology; and (e) estimates of capital or start-up costs and costs of operation, maintenance, and purchase of services to provide information.

Approved: August 25, 2009.

R. Joseph Durbala,

IRS Reports Clearance Officer.

[FR Doc. E9–21257 Filed 9–2–09; 8:45 am]

BILLING CODE 4830–01–P

Federal Register

Thursday,
September 3, 2009

Part II

Department of the Interior

Fish and Wildlife Service

50 CFR Part 32

2008–2009 Refuge-Specific Hunting and Sport Fishing Regulations—Modifications; Final Rule

DEPARTMENT OF THE INTERIOR

Fish and Wildlife Service

50 CFR Part 32

[Docket No. FWS–R9–NSR–2008–0042] [93270–1265–0000–4A]

RIN 1018-AV80

2008–2009 Refuge-Specific Hunting and Sport Fishing Regulations—Modifications

AGENCY: Fish and Wildlife Service, Interior.

ACTION: Final rule.

SUMMARY: The Fish and Wildlife Service implements pertinent refuge-specific regulations and amends other existing refuge-specific regulations that pertain to migratory game bird hunting, upland game hunting, big game hunting, and sport fishing for the 2008–2009 season.

DATES: This rule is effective September 3, 2009.

FOR FURTHER INFORMATION CONTACT: Leslie A. Marler, (703) 358-2397; Fax (703) 358-2248.

SUPPLEMENTARY INFORMATION: The National Wildlife Refuge System Administration Act of 1966 closes national wildlife refuges in all States except Alaska to all uses until opened. The Secretary of the Interior (Secretary) may open refuge areas to any use, including hunting and/or sport fishing, upon a determination that such uses are compatible with the purposes of the refuge and National Wildlife Refuge System (Refuge System or our/we) mission. The action also must be in accordance with provisions of all laws applicable to the areas, developed in coordination with the appropriate State fish and wildlife agency(ies), consistent with the principles of sound fish and wildlife management and administration, and otherwise in the public interest. These requirements ensure that we maintain the biological integrity, diversity, and environmental health of the Refuge System for the benefit of present and future generations of Americans.

We annually review refuge hunting and sport fishing programs to determine whether to include additional refuges or whether individual refuge regulations governing existing programs need modifications. Changing environmental conditions, State and Federal regulations, and other factors affecting fish and wildlife populations and habitat may warrant modifications to refuge-specific regulations to ensure the continued compatibility of hunting and sport fishing programs and to ensure that these programs will not materially interfere with or detract from the fulfillment of refuge purposes or the Refuge System's mission.

Provisions governing hunting and sport fishing on refuges are in title 50 of the Code of Federal Regulations in part 32 (50 CFR part 32). We regulate hunting and sport fishing on refuges to:

- Ensure compatibility with refuge purpose(s);
- Properly manage the fish and wildlife resource(s);
- Protect other refuge values;
- Ensure refuge visitor safety; and
- Provide opportunities for quality fish- and wildlife-dependent recreation.

On many refuges where we decide to allow hunting and sport fishing, our general policy of adopting regulations identical to State hunting and sport fishing regulations is adequate in meeting these objectives. On other refuges, we must supplement State regulations with more-restrictive Federal regulations to ensure that we meet our management responsibilities, as outlined in the **Statutory Authority** section. We issue refuge-specific hunting and sport fishing regulations when we open wildlife refuges to migratory game bird hunting, upland game hunting, big game hunting, or sport fishing. These regulations list the wildlife species that you may hunt or fish, seasons, bag or creel (container for carrying fish) limits, methods of hunting or sport fishing, descriptions of areas open to hunting or sport fishing, and other provisions as appropriate. You may find previously issued refuge-specific regulations for hunting and sport fishing in 50 CFR part 32. In this rulemaking, we also standardize and clarify the language of existing regulations.

Plain Language Mandate

In this rule we made some of the revisions to the individual refuge units to comply with a Presidential mandate to use plain language in regulations; as such, these particular revisions do not modify the substance of the previous regulations. These types of changes include using ''you'' to refer to the reader and ''we'' to refer to the Refuge System, using the word ''allow'' instead of ''permit'' when we do not require the use of a permit for an activity, and using active voice (i.e., ''We restrict entry into the refuge'' vs. ''Entry into the refuge is restricted''.)

Statutory Authority

The National Wildlife Refuge System Administration Act of 1966 (16 U.S.C. 668dd–668ee, as amended by the National Wildlife Refuge System Improvement Act of 1997 [Improvement Act]) (Administration Act), and the Refuge Recreation Act of 1962 (16 U.S.C. 460k–460k–4) (Recreation Act) govern the administration and public use of refuges.

Amendments enacted by the Improvement Act, built upon the Administration Act in a manner that provides an ''organic act'' for the Refuge System, are similar to those that exist for other public Federal lands. The Improvement Act serves to ensure that we effectively manage the Refuge System as a national network of lands, waters, and interests for the protection and conservation of our Nation's wildlife resources. The Administration Act states first and foremost that we focus our Refuge System mission on conservation of fish, wildlife, and plant resources and their habitats. The Improvement Act requires the Secretary, before allowing a new use of a refuge, or before expanding, renewing, or extending an existing use of a refuge, to determine that the use is compatible with the purpose for which the refuge was established and the mission of the Refuge System. The Improvement Act established as the policy of the United States that wildlife-dependent recreation, when compatible, is a legitimate and appropriate public use of the Refuge System, through which the American public can develop an appreciation for fish and wildlife. The Improvement Act established six wildlife-dependent recreational uses as the priority general public uses of the Refuge System. These uses are hunting, fishing, wildlife observation and photography, and environmental education and interpretation.

The Recreation Act authorizes the Secretary to administer areas within the Refuge System for public recreation as an appropriate incidental or secondary use only to the extent that doing so is practicable and not inconsistent with the primary purpose(s) for which Congress and the Service established the areas. The Recreation Act requires that any recreational use of refuge lands be compatible with the primary purpose(s) for which we established the refuge and not inconsistent with other previously authorized operations.

The Administration Act and Recreation Act also authorize the Secretary to issue regulations to carry out the purposes of the Acts and regulate uses.

We develop specific management plans for each refuge prior to opening it to hunting or sport fishing. In many cases, we develop refuge-specific regulations to ensure the compatibility of the programs with the purpose(s) for

which we established the refuge and the Refuge System mission. We ensure initial compliance with the Administration Act and the Recreation Act for hunting and sport fishing on newly acquired refuges through an interim determination of compatibility made at or near the time of acquisition. These regulations ensure that we make the determinations required by these acts prior to adding refuges to the lists of areas open to hunting and sport fishing in 50 CFR part 32. We ensure continued compliance by the development of comprehensive conservation plans, specific plans, and by annual review of hunting and sport fishing programs and regulations.

Response to Comments Received

In the January 13, 2009, **Federal Register** (74 FR 1838), we published a proposed rulemaking identifying changes pertaining to migratory game bird hunting, upland game hunting, big game hunting and sport fishing to existing refuge-specific language on certain refuges for the 2008-2009 season. We received five comments on the proposed rule during a 30–day comment period.

Comment 1: The commenter believes that rules regarding outdoor sports (hunting and fishing) should not be governed at the Federal level, but should continue to be created, monitored, and reviewed by the individual States thus saving taxpayer resources.

Response 1: As discussed earlier in the preamble (see **Statutory Authority**), these are Federal lands and both the Administration and Recreation Acts mandate that we govern the administration and public use of these refuges. Furthermore, the U.S. Supreme Court has approved of the Federal government's responsibilities to manage wildlife. The Federal government has the ability to regulate wildlife under the Property Clause (*Kleppe v. New Mexico*, 426 U.S. 529 (1976)); under the treaty-making power (Missouri v. Holland, 252 U.S. 416 (1920); and the commerce clause of the U.S. Constitution (Andrus v. Allard, 444 U.S. 51 (1979)). Nevertheless, the Service has and will continue to work in cooperation with individual States in creating rules to manage wildlife.

Comment 2: Two commenters raised concerns over whether the Service has jurisdiction over Hookton Slough and White Slough (associated with Humboldt Bay National Wildlife Refuge in California). They believe that these are State-owned navigable waterways, and as such, are held in public trust by the State for the benefit of the public. They believe that the State would, therefore, regulate the use of those navigable waterways, including for purposes of hunting, through individual lease agreements. They believe that the Service does not have any specific lease agreement with the State to regulate hunting on those two sloughs. The commenter states that California currently allows hunting 7 days a week on Hookton Slough.

Response 2: The Service (Region 8) is currently in the process of developing their comprehensive conservation plan for the Humboldt Bay and Castle Rock National Wildlife Refuge Complex. We have been and will continue to address this jurisdictional issue through the comprehensive conservation planning (CCP) process. The CCP process provides all interested members of the public opportunity to comment through public scoping meetings and public comment periods. CCPs describe the desired future conditions of a refuge or planning unit and provide long-range guidance and management direction to achieve the purposes of the refuge; help fulfill the mission of the Refuge System; maintain and, where appropriate, restore the ecological integrity of each refuge and the Refuge System; help achieve the goals of the National Wilderness Preservation System; and meet other mandates. The Service recently completed public scoping/meeting activities for the CCP and plan to complete the CCP by the summer of 2009. In the meantime, we are removing condition A10 from the final rule and renumbering the remaining conditions A11 and A12 as A10 and A11 respectively.

Comment 3: The Louisiana Department of Wildlife and Fisheries wrote to say that they had recently changed their State regulations to allow the use of crossbows as legal archery equipment and are now using the term primitive firearms instead of muzzleloaders. Additionally, the State requests that we change our regulations to drop the requirement for archery certification prior to participation in archery hunts for consistency among Louisiana refuges. The State also requests that we consider providing additional hunting opportunities that are consistent with State regulations (fur trapping and alligator harvest on all Louisiana refuges). They recommend that we modify all affected Louisiana refuges accordingly.

Response 3: We agree in part. The Service ensures that any request to modify our regulations is consistent with its management responsibility. Generally the Refuge System's practice is whenever possible to allow hunting in accordance with State regulations so long as these regulations continue to conserve the refuge's natural resources and ensure visitor safety. Having determined that some of the State's regulations are compatible with the Service's management responsibilities, we will make the following changes to nine of the Louisiana refuges proposed in the January 13, 2009, regulations (Bayou Cocodrie, Black Bayou Lake, Cameron Prairie, Cat Island, Catahoula, Grand Cote, Lacassine, Lake Ophelia, and Tensas National Wildlife Refuges): Remove the prohibition on crossbows; change the word ''muzzleloader'' to ''primitive firearms''; and drop the archery certification requirement in our regulations. Two of the proposed refuges (Big Branch Marsh and Sabine) did not reference these issues/conditions in their refuge-specific regulations but operate in accordance with State regulations in any event. We cannot modify conditions on the other Louisiana refuges not proposed in the January 13, 2009, rule. We will, however, in future rulemakings consider modifying the other affected Louisiana refuges reflecting these recent State regulation changes.

Regarding the State's request that we ''consider'' additional opportunities for trapping and alligator harvest, the Service considered this request but does not plan to change our regulations on these issues at this time. The Refuge System considers trapping to be a management activity and, as such, it would not be considered as a recreational opportunity covered by 50 CFR part 32. As discussed earlier in the **SUPPLEMENTARY INFORMATION** section, our general policy is to adopt regulations identical to State hunting and sport fishing regulations. However, in some cases, we must supplement State regulations with more restrictive Federal regulations to ensure that we meet our management responsibilities, as outlined in the **Statutory Authority** section.

Comment 4: A commenter questioned the prohibition of crossbows for hunting on refuge lands being inconsistent with State of Georgia regulations and the majority of States. The commenter feels that the prohibition discriminates against disabled, elderly, and youth hunters unable to hunt with a bow; and that the Refuge System is understaffed to enforce this prohibition. The State of Georgia refuges in question are Harris Neck, Savannah, and Wassaw National Wildlife Refuges.

Response 4: We are making no changes to the regulations at this time. However, we are considering the use of crossbows at Savannah, Wassaw, and

Harris Neck National Wildlife Refuges through our comprehensive conservation plans (CCPs), scheduled for completion in 2011. Through the CCP process, the Service will provide an opportunity for all interested members of the public to comment. Even if the Service decides to allow the use of crossbows here in a manner consistent with the State's regulations, we reserve the right, as discussed in response #3 and in the **Statutory Authority** section, to supplement State regulations with more restrictive Federal regulations to ensure that we meet our management responsibilities.

Effective Date

This rule is effective upon publication in the **Federal Register**. We have determined that any further delay in implementing these refuge-specific hunting and sport fishing regulations would not be in the public interest, in that a delay would hinder the effective planning and administration of the hunting and fishing programs. We provided a 30–day public comment period for the January 13, 2009, proposed rule. An additional delay would jeopardize holding the hunting and/or fishing programs this year or shorten their duration and thereby lessen the management effectiveness of this regulation. This rule does not impact the public generally in terms of requiring lead time for compliance. Rather it relieves restrictions in that it allows activities on refuges that we would otherwise prohibit. Therefore, we find good cause under 5 U.S.C. 553(d)(3) to make this rule effective upon date of publication.

Amendments to Existing Regulations

This document codifies in the Code of Federal Regulations the Service's hunting and/or sport fishing regulations that are applicable at Refuge System units previously opened to hunting and/or sport fishing. We are doing this to better inform the general public of the regulations at each refuge, to increase understanding and compliance with these regulations, and to make enforcement of these regulations more efficient. In addition to now finding these regulations in 50 CFR part 32, visitors to our refuges will usually find them reiterated in literature distributed by each refuge or posted on signs.

We have cross-referenced a number of existing regulations in 50 CFR parts 26, 27, and 32 to assist hunting and sport fishing visitors with understanding safety and other legal requirements on refuges. This redundancy is deliberate, with the intention of improving safety and compliance in our hunting and sport fishing programs. Furthermore, this redundancy helps ensure continued conservation of wildlife and protection of the environment with respect to regulations limiting the amount and type of ammunition permitted.

We are revising 50 CFR 32.8, ''Areas closed to hunting,'' by removing the entry dated October 2, 1958, under the States of Iowa, Minnesota, and Wisconsin which was mooted by 2007 regulations discussed below. On October 24, 2006, we published a comprehensive conservation plan describing habitat and waterfowl use changes in those closed areas and outlined needed location and boundary changes. We further published a final regulation on September 7, 2007 (72 FR 51534), amending hunting and fishing regulations for the Upper Mississippi River National Wildlife and Fish Refuge in the States of Illinois, Iowa, Minnesota, and Wisconsin, which included changes to the system of closed areas, thus making the 1958 entries moot. A copy of the refuge comprehensive conservation plan can be found at *www.fws.gov/midwest/planning/uppermiss*.

We have removed conditions pertaining to different types of and allowed use of weaponry and requirements to unload all firearms when traveling to and from the hunting area that is redundant with part 27.42. On May 22, 2009, President Obama signed the Credit Cardholders' Bill of Rights Act of 2009 (H.R. 627) containing an amendment that would allow firearms in parks and refuges, which is to take effect in February, 2010. Accordingly, because these regulations will be permanent, we have not included provisions on weapons which are inconsistent with this new legislation in this final regulation. Until those provisions are effective, the general regulations found at 50 CFR 27.42 continue to apply.

Fish Advisory

For health reasons, anglers should review and follow State-issued consumption advisories before enjoying recreational sport fishing opportunities on Service-managed waters. You can find information about current fish consumption advisories on the internet at: *http://www.epa.gov/ost/fish/*.

Regulatory Planning and Review

The Office of Management and Budget (OMB) has determined that this rule is not significant under Executive Order 12866 (E.O. 12866). OMB bases its determination on the following four criteria:

(a) Whether the rule will have an annual effect of $100 million or more on the economy or adversely affect an economic sector, productivity, jobs, the environment, or other units of the government.

(b) Whether the rule will create inconsistencies with other Federal agencies' actions.

(c) Whether the rule will materially affect entitlements, grants, use fees, loan programs, or the rights and obligations of their recipients.

(d) Whether the rule raises novel legal or policy issues.

Regulatory Flexibility Act

Under the Regulatory Flexibility Act (as amended by the Small Business Regulatory Enforcement Fairness Act [SBREFA] of 1996) (5 U.S.C. 601, *et seq.*), whenever a Federal agency is required to publish a notice of rulemaking for any proposed or final rule, it must prepare and make available for public comment a regulatory flexibility analysis that describes the effect of the rule on small entities (i.e., small businesses, small organizations, and small government jurisdictions). However, no regulatory flexibility analysis is required if the head of an agency certifies that the rule would not have a significant economic impact on a substantial number of small entities. Thus, for a regulatory flexibility analysis to be required, impacts must exceed a threshold for ''significant impact'' and a threshold for a ''substantial number of small entities.'' See 5 U.S.C. 605(b). SBREFA amended the Regulatory Flexibility Act to require Federal agencies to provide a statement of the factual basis for certifying that a rule would not have a significant economic impact on a substantial number of small entities.

This rule does not increase the number of recreation types allowed on the System nor does it establish new hunting or fishing programs on national wildlife refuges. Instead, this rule makes administrative changes, provides clarification, and makes minor changes to recreational opportunities on a number of national wildlife refuges. As a result, visitor use for wildlife-dependent recreation on national wildlife refuges may change. The changes are likely to minimally impact visitor activity on these national wildlife refuges. We do not expect an impact to overall visitor use days due to changes on individual refuges such as the use of safety belts in tree stands or reporting accidents involving property damage or personal injury. There may be minor decreases in visitor use due to modifications such as individual refuges

prohibiting the use of permanent structures, prohibiting marking of trees, or prohibiting hunting with bait. We would expect only a minor change, if any, in visitor use. If visitor use does decrease marginally, we would expect these visitors to go to a substitute site for the activity and not necessarily result in an overall decrease in participation rates for the activity.

Small businesses within the retail trade industry (such as hotels, gas stations, taxidermy shops, bait and tackle shops, etc.) may be impacted from some decreased refuge visitation. A large percentage of these retail trade establishments in the local communities around national wildlife refuges qualify as small businesses. We expect that the incremental recreational changes will be scattered, and so we do not expect that the rule will have a significant economic effect on a substantial number of small entities in any region or nationally.

With the small change in overall spending anticipated from this rule, it is unlikely that a substantial number of small entities will have more than a small impact from the spending change near the affected refuges. Therefore, we certify that this rule will not have a significant economic effect on a substantial number of small entities as defined under the Regulatory Flexibility Act (5 U.S.C. 601 *et seq.*). An initial/final Regulatory Flexibility Analysis is not required. Accordingly, a Small Entity Compliance Guide is not required.

Small Business Regulatory Enforcement Fairness Act

The rule is not a major rule under 5 U.S.C. 804(2), the Small Business Regulatory Enforcement Fairness Act. We anticipate no significant employment or small business effects. This rule:

a. Would not have an annual effect on the economy of $100 million or more. The minimal impact would be scattered across the country and would most likely not be significant in any local area.

b. Would not cause a major increase in costs or prices for consumers, individual industries, Federal, State, or local government agencies, or geographic regions. This rule would have only a slight effect on the costs of hunting and fishing opportunities for Americans. If the substitute sites are farther from the participants' residences, then an increase in travel costs would occur. The Service does not have information to quantify this change in travel cost but assumes that, since most people travel less than 100 miles to hunt and fish, the increased travel cost would be small. We do not expect this rule to affect the supply or demand for fishing and hunting opportunities in the United States and, therefore, it should not affect prices for fishing and 0hunting equipment and supplies, or the retailers that sell equipment.

c. Would not have significant adverse effects on competition, employment, investment, productivity, innovation, or the ability of United States–based enterprises to compete with foreign-based enterprises. This rule represents only a small proportion of recreational spending at national wildlife refuges. Therefore, this rule would have no measurable economic effect on the wildlife-dependent industry, which has annual sales of equipment and travel expenditures of $72 billion nationwide.

Unfunded Mandates Reform Act

Since this rule would apply to public use of federally owned and managed refuges, it would not impose an unfunded mandate on State, local, or Tribal governments or the private sector of more than $100 million per year. The rule would not have a significant or unique effect on State, local, or Tribal governments or the private sector. A statement containing the information required by the Unfunded Mandates Reform Act (2 U.S.C. 1531 *et seq.*) is not required.

Takings (E.O. 12630)

In accordance with E.O. 12630, this rule would not have significant takings implications. This regulation would affect only visitors at national wildlife refuges and describe what they can do while they are on a refuge.

Federalism (E.O. 13132)

As discussed in the *Regulatory Planning and Review* and Unfunded Mandates Reform Act sections above, this rule would not have sufficient Federalism implications to warrant the preparation of a Federalism Assessment under E.O. 13132. In preparing this rule, we worked with State governments.

Civil Justice Reform (E.O. 12988)

In accordance with E.O. 12988, the Office of the Solicitor has determined that the rule would not unduly burden the judicial system and that it meets the requirements of sections 3(a) and 3(b)(2) of the Order. The regulation would clarify established regulations and result in better understanding of the regulations by refuge visitors.

Energy Supply, Distribution or Use (E.O. 13211)

On May 18, 2001, the President issued E.O. 13211 on regulations that significantly affect energy supply, distribution, and use. E.O. 13211 requires agencies to prepare Statements of Energy Effects when undertaking certain actions. Because this rule would make only minor changes to refuges open to hunting and fishing, it is not a significant regulatory action under E.O. 12866 and is not expected to significantly affect energy supplies, distribution, and use. Therefore, this action is a not a significant energy action and no Statement of Energy Effects is required.

Consultation and Coordination with Indian Tribal Governments (E.O. 13175)

In accordance with E.O. 13175, we have evaluated possible effects on federally recognized Indian tribes and have determined that there are no effects. We coordinate recreational use on national wildlife refuges with Tribal governments having adjoining or overlapping jurisdiction before we propose the regulations.

Paperwork Reduction Act

This regulation does not contain any information collection requirements other than those already approved by the Office of Management and Budget under the Paperwork Reduction Act (44 U.S.C. 3501 *et seq.*) (OMB Control Number is 1018-0102 and 1018-0140). See 50 CFR 25.23 for information concerning that approval. An agency may not conduct or sponsor and a person is not required to respond to a collection of information unless it displays a currently valid OMB control number.

Endangered Species Act Section 7 Consultation

We comply with Section 7 of the ESA when developing Comprehensive Conservation Plans (CCPs) and step-down management plans (which would include hunting and/or fishing plans) for public use of refuges, and prior to implementing any new or revised public recreation program on a refuge as identified in 50 CFR 26.32.

National Environmental Policy Act

We analyzed this rule in accordance with the criteria of the National Environmental Policy Act of 1969 (NEPA) (42 U.S.C. 4332(C)) and 516 Departmental Manual (DM) 6, Appendix 1. This rule does not constitute a major Federal action significantly affecting the quality of the human environment. An

environmental impact statement/ assessment is not required.

A categorical exclusion from NEPA documentation applies to publication of proposed amendments to refuge-specific hunting and fishing regulations since it is technical and procedural in nature, and the environmental effects are too broad, speculative, or conjectural to lend themselves to meaningful analysis (516 DM 2, Appendix 1.10). Concerning the actions that are the subject of this rulemaking, NEPA has been complied with at the project level where each proposal was developed. This is consistent with the Department of the Interior instructions for compliance with NEPA where actions are covered sufficiently by an earlier environmental document (516 DM 3.2A).

Prior to the addition of a refuge to the list of areas open to hunting and fishing in 50 CFR part 32, we develop hunting and fishing plans for the affected refuges. We incorporate these proposed refuge hunting and fishing activities in the refuge CCPs and/or other step-down management plans, pursuant to our refuge planning guidance in 602 Fish and Wildlife Service Manual (FW) 1, 3, and 4. We prepare these CCPs and step-down plans in compliance with section 102(2)(C) of NEPA, and the Council on Environmental Quality's regulations for implementing NEPA in 40 CFR parts 1500–1508. We invite the affected public to participate in the review, development, and implementation of these plans. Copies of all plans and NEPA compliance are available from the refuges at the addresses provided below.

Available Information for Specific Refuges

Individual refuge headquarters retain information regarding public use programs and conditions that apply to their specific programs and maps of their respective areas. If the specific refuge you are interested in is not mentioned below, then contact the appropriate Regional offices listed below:

Region 1—Hawaii, Idaho, Oregon, and Washington. Regional Chief, National Wildlife Refuge System, U.S. Fish and Wildlife Service, Eastside Federal Complex, Suite 1692, 911 N.E. 11th Avenue, Portland, Oregon 97232-4181; Telephone (503) 231-6214.

Region 2—Arizona, New Mexico, Oklahoma, and Texas. Regional Chief, National Wildlife Refuge System, U.S. Fish and Wildlife Service, Box 1306, 500 Gold Avenue, Albuquerque, New Mexico 87103; Telephone (505) 248-7419.

Region 3—Illinois, Indiana, Iowa, Michigan, Minnesota, Missouri, Ohio, and Wisconsin. Regional Chief, National Wildlife Refuge System, U.S. Fish and Wildlife Service, 1 Federal Drive, Federal Building, Fort Snelling, Twin Cities, Minnesota 55111; Telephone (612) 713-5401.

Region 4—Alabama, Arkansas, Florida, Georgia, Kentucky, Louisiana, Mississippi, North Carolina, Tennessee, South Carolina, Puerto Rico, and the Virgin Islands. Regional Chief, National Wildlife Refuge System, U.S. Fish and Wildlife Service, 1875 Century Boulevard, Atlanta, Georgia 30345; Telephone (404) 679-7166.

Region 5—Connecticut, Delaware, District of Columbia, Maine, Maryland, Massachusetts, New Hampshire, New Jersey, New York, Pennsylvania, Rhode Island, Vermont, Virginia and West Virginia. Regional Chief, National Wildlife Refuge System, U.S. Fish and Wildlife Service, 300 Westgate Center Drive, Hadley, Massachusetts 01035-9589; Telephone (413) 253-8306.

Region 6—Colorado, Kansas, Montana, Nebraska, North Dakota, South Dakota, Utah, and Wyoming. Regional Chief, National Wildlife Refuge System, U.S. Fish and Wildlife Service, 134 Union Blvd., Lakewood, Colorado 80228; Telephone (303) 236-8145.

Region 7—Alaska. Regional Chief, National Wildlife Refuge System, U.S. Fish and Wildlife Service, 1011 E. Tudor Rd., Anchorage, Alaska 99503; Telephone (907) 786-3545.

Region 8—California and Nevada. Regional Chief, National Wildlife Refuge System, U.S. Fish and Wildlife Service, 2800 Cottage Way, Room W-2606, Sacramento, California 95825; Telephone (916) 414-6464.

Primary Author

Leslie A. Marler, Management Analyst, Division of Conservation Planning and Policy, National Wildlife Refuge System is the primary author of this rulemaking document.

List of Subjects in 50 CFR Part 32

Fishing, Hunting, Reporting and recordkeeping requirements, Wildlife, Wildlife refuges.

For the reasons set forth in the preamble, we amend title 50, chapter I, subchapter C of the Code of Federal Regulations as follows:

PART 32—[AMENDED]

■ 1. The authority citation for part 32 continues to read as follows:

Authority: 5 U.S.C. 301; 16 U.S.C. 460k, 664, 668dd-668ee, and 715i.

■ 2. Amend §32.8, ''Areas closed to hunting.'', by removing the entries dated ''October 2, 1958,'' under the States of Iowa, Minnesota, and Wisconsin.

■ 3. Amend §32.20 Alabama by:

■ a. Adding paragraphs B.6. and B.7., removing paragraph C.3., redesignating paragraphs C.4. through C.7. as paragraphs C.3. through C.6., revising newly redesignated paragraph C.6, and adding paragraphs C.7. and C.8. of Cahaba River National Wildlife Refuge;

■ b. Adding paragraph B.11., revising paragraph C.1., removing paragraphs C.4., C.6., and C.7., and redesignating paragraph C.5. as paragraph C.4. of Choctaw National Wildlife Refuge;

■ c. Revising paragraph A.3., adding paragraph B.6., and revising paragraph C.6. of Eufaula National Wildlife Refuge; and

■ d. Revising paragraphs A., B.1., and C.1. and adding paragraph C.4. of Mountain Longleaf National Wildlife Refuge to read as follows:

§ 32.20 Alabama.

* * * * *

Cahaba River National Wildlife Refuge

* * * * *

B. Upland Game Hunting. * * *

* * * * *

6. All youth hunters age 15 and younger must remain within sight and normal voice contact of an adult age 21 or older, possessing a valid hunting license. Youth hunters must have passed a State-approved hunter education course. One adult may supervise no more than two youths.

7. We prohibit marking trees and the use of flagging tape, reflective tacks, and other similar marking devices (see §32.2(i)).

C. Big Game Hunting. * * *

6. Conditions B2, B3, and B8 apply.

7. All youth hunters age 15 and younger must remain within sight and normal voice contact of an adult age 21 or older, possessing a valid hunting license. Youth hunters must have passed a State-approved hunter education course. One adult may supervise no more than one youth.

8. We prohibit participation in organized drives.

* * * * *

Choctaw National Wildlife Refuge

* * * * *

B. Upland Game Hunting. * * *

* * * * *

11. We prohibit the use of mules, horses, and ATVs on all refuge hunts.

C. Big Game Hunting. * * *

1. Conditions B1 through B8 and B11 apply.

* * * * *

Eufaula National Wildlife Refuge

A. Migratory Game Bird Hunting. * * *

* * * * *

3. We allow goose and duck hunting by permit only in the Kennedy and Bradley Units on selected days until 12 p.m. (noon) during State waterfowl seasons. We close all other areas within the refuge to waterfowl hunting.

* * * * *

B. Upland Game Hunting. * * *

* * * * *

6. You may possess only approved nontoxic shotshells while in the field (see §32.2(k)).

C. Big Game Hunting. * * *

* * * * *

6. We prohibit damaging trees or hunting from a tree that contains an inserted metal object (see §32.2(i)). Hunters must remove tree stands from the refuge each day (see §27.93 of this chapter).

* * * * *

Mountain Longleaf National Wildlife Refuge

A. Migratory Game Bird Hunting. We allow hunting of woodcock on designated areas of the refuge in accordance with State regulations subject to the following conditions:

1. You must possess and carry a signed refuge hunt permit while hunting.

2. We prohibit marking trees and the use of flagging tape, reflective tacks, and other similar marking devices (see §27.61 of this chapter).

3. All youth hunters age 15 and younger must remain within sight and normal voice contact of an adult age 21 or older, possessing a valid hunting license. Youth hunters must have passed a State-approved hunter education course. One adult may supervise no more than two youths.

4. We prohibit the use of horses, mules, and ATVs on all refuge hunts.

B. Upland Game Hunting. * * *

1. Conditions A1 through A5 apply.

* * * * *

C. Big Game Hunting. * * *

1. Conditions A1 through A3 and A5 apply.

* * * * *

4. All youth hunters age 15 and younger must remain within sight and normal voice contact of an adult age 21 or older, possessing a valid State hunting license. Youth hunters must have passed a State-approved hunter education course. One adult may supervise no more than one youth.

5. We require tree stand users to use a safety belt or harness.

* * * * *

■ 4. Amend §32.22 Arizona by revising paragraph A.1., adding paragraphs A.8 through A.11., revising paragraphs B.1., C.1., and C.2., and adding paragraph D.5. of Bill Williams River National Wildlife Refuge to read as follows:

§ 32.22 Arizona.

* * * * *

Bill Williams River National Wildlife Refuge

A. Migratory Game Bird Hunting. * * *

1. We allow only shotguns for hunting. We limit all shotguns to a maximum three-shell capacity, unless it is plugged with a one-piece filler, incapable of removal without disassembling the gun, so its total capacity does not exceed three shells (see §20.21(b) of this chapter).

* * * * *

8. Anyone for hire to assist or guide a hunter or angler must first obtain, possess, and carry a valid Special Use Permit issued by the refuge manager.

9. We prohibit the construction or use of any pits, permanent blinds, or other structures (see §27.92 of this chapter).

10. Hunters must remove all personal items from the refuge at the end of each day's activity, i.e., boats, equipment, cameras, temporary blinds, stands, etc. (see §27.93 of this chapter).

11. Hunters must report accidents involving property damage or personal injury to the refuge manager or authorized Service personnel (see §25.72 of this chapter).

B. Upland Game Hunting. * * *

1. Conditions A1 through A11 apply.

* * * * *

C. Big Game Hunting. * * *

1. Conditions A3 and A5 through A11 apply.

2. We only allow hunting on the refuge in those areas south of the Bill Williams River Road and east of Arizona State Rt. 95 plus the south half of Section 35, T.11N, R 17W as posted. Exceptions: Arizona Wildlife Management Areas 16A and 44A.

D. Sport Fishing. * * *

* * * * *

5. Conditions A3 and A7 through A11 apply.

* * * * *

■ 5. Revising §32.23 Arkansas by:

■ a. Revising paragraphs B.3. and B.4. of Bald Knob National Wildlife Refuge;

■ b. Revising paragraphs B.2. and B.3. of Cache River National Wildlife Refuge;

■ c. Revising paragraphs A.1. and A.11., and adding paragraphs A.22. through A.25. of Felsenthal National Wildlife Refuge;

■ d. Revising paragraphs A.1. and A.11. and adding paragraphs A.21. through A.24. of Overflow National Wildlife Refuge;

■ e. Revising paragraphs A.1., A.3., A.7., A.10., A.12., A.14., A.16., and A.17., adding paragraphs A.20. through A.24., revising paragraphs B.2., B.3., B.5., C.2., C.4., C.8., C.12., C.15., adding paragraphs C.17. and C.18., and revising paragraph D.2. of Pond Creek National Wildlife Refuge; and

■ f. Revising paragraphs A.8. through A.10., A.14., adding paragraph A.17., and revising paragraphs B.8., C.2. through C.4., C.8., C.17., C.22., removing paragraph D.8., redesignating paragraphs D.9. through D.11. as paragraphs D.8. through D.10., and revising newly redesignated paragraphs D.8. and D.10. of White River National Wildlife Refuge to read as follows:

§ 32.23 Arkansas.

* * * * *

Bald Knob National Wildlife Refuge

* * * * *

B. Upland Game Hunting. * * *

* * * * *

3. We allow fall squirrel hunting in accordance with the State season on the Mingo Creek Unit and on the Farm Unit, except for season closure on the Farm Unit during the Gun Deer Hunt. We prohibit dogs, except for the period of December 15 through February 28. We do not open for the spring squirrel season.

4. We allow rabbit hunting in accordance with the State season on the Mingo Creek Unit and on the Farm Unit, except for season closure on the Farm Unit during the Gun Deer Hunt. We prohibit dogs, except for the period of December 15 through February 28.

* * * * *

Cache River National Wildlife Refuge

* * * * *

B. Upland Game Hunting. * * *

* * * * *

2. Fall squirrel season corresponds with the State season on all refuge hunt units except for refugewide season closure during the Gun Deer Hunt. We prohibit dogs, except for the period of December 15 through February 28. We do not open for the spring squirrel season.

3. Rabbit season corresponds with the State season on all refuge hunt units except for refugewide season closure during the Gun Deer Hunt. We prohibit dogs, except for the period of December 15 through February 28.

* * * * *

Felsenthal National Wildlife Refuge

A. Migratory Game Bird Hunting. * * *

1. We allow hunting of duck, goose, and coot during the State duck season except during scheduled quota refuge Gun Deer Hunts. We allow hunting of woodcock during the State season. Dates for quota deer hunts are typically in November, and we publish them annually in the refuge hunt brochure. We are open for the September teal season.

* * * * *

11. Hunters under age 16 do not need to have a hunter education card if they are under the direct supervision (within arm's reach) of a holder of a valid hunting license at least age 21.

* * * * *

22. We prohibit hunting with the aid of bait, salt, or any ingestible attractant (see §32.2(h)).

23. We prohibit hunting from a tree in which a metal object has been driven to support a hunter (see §32.2(i)).

24. If you harvest a deer or turkey on the refuge, you must immediately record the zone 220 on your deer/turkey tag as the zone of kill.

25. We prohibit the taking of wildlife or plants (including cutting trees or brush) other than specified in the hunt brochure (see §27.51 of this chapter).

* * * * *

Overflow National Wildlife Refuge

A. Migratory Game Bird Hunting. * * *

1. We allow hunting of duck, goose, and coot during the State duck season. We allow hunting of woodcock during the State season. The September teal season is closed.

* * * * *

11. Hunters under age 16 do not need to have a hunter education card if they are under the direct supervision (within arm's reach) of a holder of a valid hunting license who is at least age 21.

* * * * *

21. We prohibit hunting with the aid of bait, salt, or any ingestible attractant (see §32.2(h)).

22. We prohibit hunting from a tree in which a metal object has been driven to support a hunter (see §32.2(i)).

23. If you harvest a deer or turkey on the refuge, you must immediately record the zone 490 on your deer/turkey tag as the zone of kill.

24. We prohibit the taking of wildlife or plants (including cutting trees or brush) other than specified in this brochure (see §27.51 of this chapter).

* * * * *

Pond Creek National Wildlife Refuge

A. Migratory Game Bird Hunting. * * *

1. We allow hunting of migratory game birds during the State duck seasons, except we close during scheduled quota refuge Gun Deer Hunts. Dates for quota deer hunts are typically in November, and we publish them annually in the refuge hunt brochure. We are open for the September teal season.

* * * * *

3. We only allow portable blinds. Hunters must remove from the hunt area each day all duck hunting equipment, including blinds, decoys, and boats (see §27.93 of this chapter).

* * * * *

7. We prohibit marking trails with material other than biodegradable paper, flagging, or reflective tape/tacks.

* * * * *

10. Hunters under age 16 do not need to have a hunter education card if they are under the direct supervision (within arm's reach) of a holder of a valid hunting license who is at least age 21. An adult age 21 or older must supervise youth hunters under age 16 who have a valid Hunter Education Card, and youth hunters must remain in sight and normal voice contact with the adult. One adult may supervise no more than two youth hunters for any hunting season.

* * * * *

12. We prohibit hunting within 150 feet (45 m) of roads and trails (see §27.31 of this chapter) open to motor vehicle use (including ATV and designated hiking trails).

* * * * *

14. We allow only camping at designated primitive campground sites identified in the refuge hunt brochure. We restrict camping to the individuals involved in refuge wildlife-dependent activities. Campers may stay no more than 14 days during any consecutive 30–day period in a campground and must occupy the camps daily. We prohibit all disturbances, including use of generators, after 10 p.m. We allow no more than three portable stands per person.

* * * * *

16. We prohibit blocking of gates, boat ramps, or roadways (see §27.31(h) of this chapter).

17. We allow the use of retriever dogs during State waterfowl seasons.

* * * * *

20. We prohibit possession, placement, or hunting over bait, salt, or any other ingestible attractant (see §32.2(h)).

21. We prohibit the use of an artificial light to locate wildlife (exception: raccoon/opossum hunting with dogs).

22. We prohibit taking of wildlife or plants (including cutting trees or brush) other than what we allow in the refuge brochure (see §27.51 of this chapter).

23. We prohibit placement of metal objects (screw, nail, spike, etc.) into a tree to support a hunter or hunting from a tree with such metal objects placed (see §32.2(i)).

24. We prohibit possessing, using, or leaving any tree stand, game camera, or boat on the refuge without the owner's name and address affixed in a conspicuous manner.

B. Upland Game Hunting. * * *

* * * * *

2. We do not open for spring squirrel season and summer/fall raccoon season.

3. Conditions A4 through A16 and A19 through A24 apply.

* * * * *

5. We allow use of dogs for squirrel, rabbit, raccoon, and opossum hunting during the State raccoon/opossum hunting season. At other times you must keep dogs and other pets on a leash or confined (see §26.21(b) of this chapter).

C. Big Game Hunting. * * *

* * * * *

2. Conditions A4 through A16 and A19 through A24 apply.

* * * * *

4. We allow muzzleloader deer hunting during the October State muzzleloader season for this deer management zone. The bag limit is one buck and one doe. Hunters must take and check-in a doe before taking a buck.

* * * * *

8. You must check all deer taken during the quota gun deer and muzzleloader hunts at the refuge deer check station on the same day of kill. You must keep carcasses of deer taken intact (you may remove entrails) until checked.

* * * * *

12. The refuge will conduct one 2–day, youth-only (age 15 and younger at the beginning of the spring turkey season) quota spring turkey hunt and one 3–day quota spring turkey hunt (typically in April). Specific hunt dates and application procedures will be available in January. We restrict hunt participants on these hunts to those drawn for a quota permit, except that during the youth hunt, a nonhunting adult age 21 or older must accompany the youth hunter. The limit is one bearded turkey.

* * * * *

15. One adult may supervise no more than one youth during big game hunts.

* * * * *

17. We prohibit deer drives.

18. We prohibit all public use, except fishing and access for fishing, during quota hunts.

D. Sport Fishing. * * *

* * * * *

2. Conditions A4 through A16 and A18 through A24 apply.

* * * * *

White River National Wildlife Refuge

A. Migratory Game Bird Hunting. * * *

* * * * *

8. Waterfowl hunters may enter and access the refuge no earlier than 4 a.m.

9. The following refuge users (age 16 or older) must sign and possess and carry a refuge general user permit: hunters, anglers, campers, and ATV users.

10. We prohibit boating December 1 through January 31 in the South Unit Waterfowl Hunt Area, except from 4 a.m. to 1 p.m. on designated hunt days.

* * * * *

14. We prohibit waterfowl hunting on Kansas Lake Area (indicated in user permit).

* * * * *

17. We allow the use of ATVs only on yellow-marked trails throughout the refuge, unless marked otherwise. We prohibit the use of ATVs after December 15 each year in designated South Unit areas (see user permit for areas).

B. Upland Game Hunting. * * *

* * * * *

8. We allow spring squirrel hunting on the North Unit with the concurrent State spring season dates.

C. Big Game Hunting. * * *

* * * * *

2. Archery deer and turkey seasons on the North Unit will begin with the concurrent State archery season and end January 31. (Kansas Lake Area Closed after November 30)

3. Archery deer and turkey seasons on the South Unit will begin with the concurrent State archery season and end December 31.

4. The user permit dictates the modern gun quota deer season dates each year for the North and South Units. We require a quota permit. You may take one deer of either sex.

* * * * *

8. We allow muzzleloader hunting on the North Unit for 4 consecutive days following the 3–day muzzleloader quota hunt. We allow take of only one buck.

* * * * *

17. We prohibit distribution of bait or hunting with the aid of bait, salt, or ingestible attractant (see §32.2(h)).

* * * * *

22. We prohibit leaving a hunt stand after February 7 (one week after the end of the season).

* * * * *

D. Sport Fishing. * * *

* * * * *

8. We allow commercial fishing on all refuge waters from 12:00 p.m. (noon) September 30 through 12:00 p.m. (noon) November 30. However, when the White River exceeds 23.5 feet (7 m) at the St. Charles, Arkansas gauge or 146 msl (mean sea level) at the tailwater gauge at Lock and Dam #1 on the Arkansas Post Canal, we allow commercial fishing on all refuge waters from 12:00 p.m. (noon) March 1 through 12:00 p.m. (noon) September 30.

* * * * *

10. Anglers must reset trotlines when receding water levels expose them. Anglers must display their name and address on a tag on each line.

■ 6. Amend §32.24 California by:

■ a. Revising paragraphs A.1., A.6. through A.8., removing paragraph A.10., and redesignating paragraphs A.11. and A.12. as paragraphs A.10. and A.11. of Humboldt Bay National Wildlife Refuge; and

■ b. Revising paragraphs A.6., A9., A.11., B.2., C.1., C.3., and D.2. of Sacramento River National Wildlife Refuge to read as follows:

§ 32.24 California.

* * * * *

Humboldt Bay National Wildlife Refuge

A. Migratory Game Bird Hunting. * * *

1. We require adults age 18 or older to accompany youth hunters under age 16. No more than three youth hunters may accompany one adult hunter.

* * * * *

6. We require hunters to keep dogs inside vehicles, or on a leash, except when using them for authorized hunting purposes (see §26.21(b) of this chapter).

7. On the Salmon Creek Unit, we allow hunting on Tuesdays and Saturdays (except Federal holidays), and hunters must possess and carry a valid daily refuge permit. We issue refuge permits prior to each hunt by random drawing conducted at the check station 1½; hours before legal shooting time. Shooting time ends at 3 p.m. Hunters drawn for a blind must completely fill out a Refuge Hunt Permit, which includes a ''Record of Harvest'' section. Each hunter must possess and carry the Refuge Hunt Permit/Record of Harvest document while on the refuge and turn in a complete Record of Harvest at the check station before leaving the hunt area.

8. On the Salmon Creek Unit, you may possess only approved nontoxic shotshells (see §32.2(k)) in quantities of 25 or less per hunter, per day.

* * * * *

Sacramento River National Wildlife Refuge

A. Migratory Game Bird Hunting. * * *

* * * * *

6. Access to the hunt area on all units open to public hunting is by boat only, except on Sul Norte Unit, Drumheller, and Drumheller North, which are accessible by foot traffic or boat. We prohibit bicycles or other conveyances. Mobility-impaired hunters should consult with the refuge manager for allowed conveyances.

* * * * *

9. We open the refuge for day-use access from 1½ hours before legal sunrise until 1½ hours after legal sunset. We allow access during other hours on gravel bars only (see condition A8).

* * * * *

11. We prohibit permanent blinds. You must remove all personal property, including decoys and boats, by 1½ hours after legal sunset (see §§27.93 and 27.94 of this chapter).

* * * * *

B. Upland Game Hunting. * * *

* * * * *

2. Conditions A3 through A12 apply.

C. Big Game Hunting. * * *

1. Conditions A4 through A12, and B1 apply.

* * * * *

3. You must remove all personal property, including stands, from the refuge by 1½ hours after legal sunset (see §§27.93 and 27.94 of this chapter).

D. Sport Fishing. * * *

* * * * *

2. On Packer Lake, due to primitive access, we allow only boats up to 14 feet (4.2 m) and canoes. We allow electric motors only.

* * * * *

■ 7. Amend §32.27 Delaware by revising Prime Hook National Wildlife Refuge to read as follows:

§ 32.27 Delaware.

* * * * *

Prime Hook National Wildlife Refuge

A. Migratory Game Bird Hunting. We allow hunting of waterfowl, coot, mourning dove, snipe, and woodcock on designated areas of the refuge in accordance with State regulations subject to the following conditions:

1. We require daily permits and fees. The permits are nontransferable.

Consult with the refuge manager for details on permit conditions.

2. For all refuge hunts, a hunting or nonhunting adult age 18 or older must accompany a permitted juvenile age 17 or under.

3. Hunters may take waterfowl and coot on the Waterfowl Hunting Area only as designated on brochures available from the refuge manager.

4. The refuge is open to hunting of waterfowl and coot on Mondays, Wednesdays, Fridays, and Saturdays throughout the State waterfowl hunting seasons from ½ hour before legal sunrise until 3 p.m. Consult the refuge manager for dates when we close to hunting or have limited hunts.

5. Access to the Waterfowl Hunting Area is by boat only and hunters must use designated launching sites to launch their boats.

6. We prohibit the use of air-thrust and inboard water-thrust boats on all waters within the refuge boundaries. We allow a maximum horsepower of 30 HP.

7. We allow waterfowl hunting from designated blind sites only. We allow a maximum of three people per blind.

8. Hunters may take mourning dove, snipe, and woodcock only on the upland game hunting areas as shown on brochures available from the refuge manager.

B. Upland Game Hunting. We allow hunting of pheasant, rabbit, and quail on designated areas of the refuge in accordance with State regulations subject to the following conditions:

1. Conditions A1 and A2 apply.

2. Hunters may take pheasant, rabbit, and quail only on designated upland game hunting areas as shown on brochures available from the refuge manager.

C. Big Game Hunting. We allow hunting of white-tailed deer on designated areas of the refuge in accordance with State regulations subject to the following conditions:

1. Conditions A1 and A2 apply.

2. Hunters may take white-tailed deer only on designated deer hunting areas as shown on brochures available from the refuge manager.

3. Deer hunting during firearms seasons must be from designated stands only, unless actively tracking or retrieving wounded deer. We allow hunters to hunt from portable stands during archery hunts in all designated areas and during firearms hunts in the Slaughter Canal Area only. Tree stands must be portable, temporary in design, and completely removed at the end of each day. The Service is not responsible for any stands left overnight.

4. All persons in firearms hunting areas must display a minimum of 400 total square inches (2,600 cm^2) of solid-blaze-orange material on their head, chest, and back. Blaze-orange camouflage is not acceptable. This includes hunters who are archery hunting on the refuge during days that coincide with State firearms hunt dates for deer.

5. Hunters may use or possess slugs only during designated shotgun seasons.

6. Each permitted hunter has a season limit of only one antlered deer on the refuge.

D. Sport Fishing. We allow fishing and crabbing on designated areas of the refuge in accordance with State regulations subject to the following conditions:

1. We allow fishing and launching of boats on designated areas as shown on brochures available from the refuge manager.

2. The refuge is open from ½ hour before legal sunrise to ½ hour after legal sunset. All boats must be off the water at legal sunset.

3. Anglers using boats on Turkle and Fleetwood Ponds may propel them manually or with electric motors only.

4. We prohibit the use of air-thrust and inboard water-thrust boats on all waters within the refuge boundaries. We allow a maximum of 30HP on Prime Hook Creek.

■ 8. Amend §32.28 Florida by:

■ a. Revising paragraphs A.2., A.3., A.5., A.6., and A.13. of Arthur R. Marshall Loxahatchee National Wildlife Refuge;

■ b. Revising paragraph D.5. of Hobe Sound National Wildlife Refuge;

■ c. Revising paragraph B.2. and removing B.4. of Lower Suwannee National Wildlife Refuge;

■ d. Adding paragraph A.14. of Merritt Island National Wildlife Refuge;

■ e. Adding paragraph A.5. and revising paragraphs D.5. and D.7. of St. Marks National Wildlife Refuge; and

■ f. Revising paragraphs C.2., C.9., and C.19.iii. of St. Vincent National Wildlife Refuge to read as follows:

§ 32.28 Florida.

* * * * *

Arthur R. Marshall Loxahatchee National Wildlife Refuge

A. Migratory Game Bird Hunting. * * *

* * * * *

2. We allow hunting in the interior of the refuge south of latitude line 26.27.130 and north of mile markers 12 and 14. We prohibit hunting from canals or levees and those areas posted as closed.

3. Consult the refuge manager for current waterfowl season dates and times.

* * * * *

5. We allow hunting on the refuge from ½ hour before legal sunrise to 1 p.m. Hunters may enter the refuge no earlier than 4 a.m. and must be off the refuge by 3 p.m.

6. Hunters may enter and leave the refuge at the Headquarters Area (Boynton Beach), the Hillsboro Area (Boca Raton), and the 20 Mile Bend Area (West Palm Beach).

* * * * *

13. We only allow boats equipped with outboards or electric motors and nonmotorized boats. We prohibit airboats, hovercraft, and personal watercraft (Go Devils, Jet Skis, jet boats, and Wave Runners). All boats operating within the hunt area must fly a 12 inch by 12 inch (30 cm x 30 cm) orange flag, 10 feet (3 m) above the vessel's waterline.

* * * * *

Hobe Sound National Wildlife Refuge

* * * * *

D. Sport Fishing. * * *

* * * * *

5. We allow only two poles per angler, and anglers must attend those poles at all times in conjunction with the Martin County, Florida, two-pole ordinance.

* * * * *

Lower Suwannee National Wildlife Refuge

* * * * *

B. Upland Game Hunting. * * *

* * * * *

2. The refuge upland game hunting season opens on the Monday after the refuge limited hog hunt closes and ends on February 28.

* * * * *

Merritt Island National Wildlife Refuge

A. Migratory Game Bird Hunting. * * *

* * * * *

14. Hunters may not use or possess more than 25 shells per day.

* * * * *

St. Marks National Wildlife Refuge

A. Migratory Game Bird Hunting. * * *

* * * * *

5. We prohibit migratory game bird hunting in the Executive Closure area on the refuge.

* * * * *

D. Sport Fishing. * * *

* * * * *

5. We allow use of hand-launched boats on impoundments on the St. Marks Unit from March 15 through October 15 each year. We prohibit launching of boats from trailers in the impoundments in the St. Marks Unit.

* * * * *

7. We prohibit use of cast nets and traps to take fish from any lake, pond, or impoundment on the refuge.

* * * * *

St. Vincent National Wildlife Refuge

* * * * *

C. Big Game Hunting. * * *

* * * * *

2. We restrict hunting to three hunt periods: Sambar deer, raccoon, and feral hog – November 17-19; and white-tailed deer, raccoon, and feral hog – December 15-17 and January 5-7. Hunters may check-in and set up camp sites and stands on November 16, December 14, and January 4. Hunters must leave the island and remove all equipment by 4 p.m. on the last day of the hunt.

* * * * *

9. You may retrieve game from the closed areas only if accompanied by a refuge staff member.

* * * * *

* *

iii. Primitive weapons hunt – one white-tailed deer buck having one or more forked antlers at least 5 inches (12.5 cm) in length visible above the hairline with points greater than 1 inch (12.5 cm) in length; we issue a limited number of either-sex permits. If you have an either-sex permit, the bag limit is one deer that may be antlerless or a buck with legal antler configuration. There is no limit on feral hog or raccoon.

* * * * *

■ 9. Amend §32.29 Georgia by:

■ a. Removing paragraph C.5. and redesignating paragraphs C.6. through C.19. as paragraphs C.5. through C.18. of Blackbeard Island National Wildlife Refuge;

■ b. Revising paragraph C.2., removing paragraph C.3., redesignating paragraphs C.4. through C.22. as paragraphs C.3. through C.21., revising newly redesignated paragraph C. 18., and adding paragraph C.22. of Bond Swamp National Wildlife Refuge;

■ c. Revising paragraphs C.9. and C.12. of Harris Neck National Wildlife Refuge;

■ d. Revising paragraph D.4. of Piedmont National Wildlife Refuge;

■ e. Revising paragraphs A.1., C.3., C.5., C.10., and adding paragraph C.11. of Savannah National Wildlife Refuge; and

■ f. Revising paragraphs C.8. and C.9. of Wassaw National Wildlife Refuge to read as follows:

§ 32.29 Georgia.

* * * * *

Bond Swamp National Wildlife Refuge

* * * * *

C. Big Game Hunting. * * *

* * * * *

2. We require you to possess and carry a signed refuge hunt permit while hunting. You may obtain this permit from the refuge office.

* * * * *

18. We prohibit ATVs on the refuge except by disabled hunters with a refuge Special Use Permit.

* * * * *

22. Firearm hunting for feral hogs follows State of Georgia deer firearms restrictions except we prohibit possession or use of buckshot.

* * * * *

Harris Neck National Wildlife Refuge

* * * * *

C. Big Game Hunting. * * *

* * * * *

9. During the archery hunt, we only allow bows. We prohibit crossbows (see §27.43 of this chapter).

* * * * *

12. During the gun hunt, we only allow shotguns with slugs 20 gauge or larger and bows. We prohibit crossbows (see §27.43 of this chapter).

* * * * *

Piedmont National Wildlife Refuge

* * * * *

D. Sport Fishing. * * *

* * * * *

4. We allow nonmotorized boats on all ponds designated as open to fishing. We allow boats with electric motors only in Pond 2A and Allison Lake.

* * * * *

Savannah National Wildlife Refuge

A. Migratory Game Bird Hunting. * * *

1. You must possess and carry a signed refuge permit at all times while hunting on the refuge. We require a fee only for the quota youth waterfowl hunt on the Solomon Tract.

* * * * *

C. Big Game Hunting. * * *

* * * * *

3. We only allow bows for deer and hog hunting during the archery hunt. We prohibit crossbows (see §27.43 of this chapter).

* * * * *

5. We only allow shotguns with slugs, muzzleloaders, and bows for deer and hog hunting throughout the designated hunt area during the November gun hunt and the March hog hunt.

* * * * *

10. We only allow shotguns with #2 shot or smaller and bows for turkey hunting in accordance with State regulations. We prohibit possession or use of slugs or buckshot during turkey hunts. We prohibit crossbows (see §27.43 of this chapter).

11. You must remove hunt stands daily (see §27.93 of this chapter).

* * * * *

Wassaw National Wildlife Refuge

* * * * *

C. Big Game Hunting. * * *

* * * * *

8. We only allow bows and muzzleloading rifles during the primitive weapons hunt. We prohibit crossbows (see §27.43 of this chapter).

9. We only allow shotguns of 20-gauge or larger (slugs only), centerfire rifles of .22 caliber or larger, bows, and primitive weapons during the gun hunt. We prohibit crossbows (see §27.43 of this chapter).

* * * * *

■ 10. Amend §32.31 Idaho by:

■ a. Revising paragraph A.2. of Bear Lake National Wildlife Refuge;

■ b. Removing paragraph A.3., redesignating paragraph A.4. as paragraph A.3., and removing paragraph B.2. of Camas National Wildlife Refuge;

■ c. Revising the introductory text of paragraph A., and revising paragraphs A.1., A.2., A.4., A.5., B., C., and D. of Kootenai National Wildlife Refuge; and

■ d. Revising the introductory text of paragraph D., revising paragraph D.3., and removing paragraph D.4. of Minidoka National Wildlife Refuge to read as follows:

§ 32.31 Idaho.

* * * * *

Bear Lake National Wildlife Refuge

A. Migratory Game Bird Hunting. * * *

* * * * *

2. We allow nonmotorized and motorized boats after September 20 within the designated refuge hunting areas.

* * * * *

Kootenai National Wildlife Refuge

A. Migratory Game Bird Hunting. We allow hunting of goose, duck, and coot on designated areas of the refuge in accordance with State regulations subject to the following conditions:

1. We allow hunting only on Tuesdays, Thursdays, Saturdays, and Sundays.

2. You may possess only approved nontoxic shotshells (see §32.2(k)) in quantities of 25 or less per day.

* * * * *

4. On waterfowl hunt days, we allow public entry onto the refuge from 3:00 a.m. until 1 hour after legal sunset.

5. We prohibit overnight vehicle parking on the refuge.

B. Upland Game Hunting. We allow hunting of forest grouse on that portion of the refuge which lies west of Westside Road and west of Lion's Den Road in accordance with State regulations subject to the following condition: You may possess only approved nontoxic shotshells (see §32.2(k)) while in the field.

C. Big Game Hunting. We allow hunting of deer, elk, black bear, moose, and mountain lion on that portion of the refuge which lies west of Westside Road and west of Lion's Den Road in accordance with State regulations.

D. Sport Fishing. We allow sport fishing on Myrtle Creek in accordance with State regulations subject to the following conditions:

1. We allow bank fishing only.

2. We prohibit fishing from boats, float tubes, or other personal flotation devices.

Minidoka National Wildlife Refuge

* * * * *

D. Sport Fishing. We allow sport fishing on designated areas of the refuge in accordance with State regulations subject to the following conditions:

* * * * *

3. We allow bank and float-tube fishing year-round, throughout all of Lake Walcott.

■ 11. Amend §32.35 Kansas by revising paragraph A.9., adding paragraphs A.11. and A.12., revising the introductory text of paragraph B., revising paragraphs B.2. and B.5., adding paragraph B.6., revising paragraphs C.2., C.7., and C.9., adding paragraph C.10., and revising paragraphs D.4., D.7. and D.9. of Kirwin National Wildlife Refuge to read as follows:

§ 32.35 Kansas.

* * * * *

Kirwin National Wildlife Refuge

A. Migratory Game Bird Hunting. * * *

* * * * *

9. We prohibit the use of ATVs (all-terrain vehicle), OHVs (off-highway vehicle), NHVs (nonhighway vehicle), or snowmobiles on the refuge (see §27.31(f) of this chapter).

* * * * *

11. We prohibit overnight camping on the refuge.

12. We prohibit open fires on the refuge.

B. Upland Game Hunting. We allow hunting of pheasant, quail, prairie chicken, fox squirrel, cottontail rabbit, and turkey on designated areas of the refuge in accordance with State regulations subject to the following conditions:

* * * * *

2. In addition to pheasant, we allow hunting of fox squirrel and cottontail rabbit only during pheasant season.

* * * * *

5. We prohibit retrieval of turkey from an area closed to turkey hunting.

6. Conditions A8 through A12 apply.

C. Big Game Hunting. * * *

* * * * *

2. You must obtain a refuge-issued permit to hunt deer on the refuge. You must sign and carry the permit in the field while hunting.

* * * * *

7. We prohibit retrieving deer from an area closed to deer hunting.

* * * * *

9. We prohibit the use of nails, wires, screws, or bolts to attach a stand to a tree or hunting from a tree into which a metal object has been driven (see §32.2(i)).

10. Conditions A8 through A12 apply.

D. Sport Fishing. * * *

* * * * *

4. We allow motorless boats in the Solomon Arm of Kirwin Reservoir from August 1 through September 30.

* * * * *

7. We prohibit fishing tournaments on the refuge.

* * * * *

9. Conditions A8 through A12 apply.

* * * * *

■ 12. Amend §32.36 Kentucky by revising paragraphs A.2., A.6., A.15., A.17., A.17.v., and adding paragraph D.2. of Clarks River National Wildlife Refuge to read as follows:

§ 32.36 Kentucky.

* * * * *

Clarks River National Wildlife Refuge

A. Migratory Game Bird Hunting. * * *

* * * * *

2. We prohibit the use of motorized off-road vehicles (e.g., ATVs) and any unlicensed vehicles on the refuge (see §27.31(f) of this chapter).

* * * * *

6. To retrieve or track game from a posted closed area of the refuge, the hunter must first receive authorization from the refuge manager at 270-527-5770 or the law enforcement officer at 270-702-2836.

* * * * *

15. Waterfowl hunters must remove decoys, blinds, boats, and all other equipment (see §27.93 of this chapter) and be out of the field daily by 2 p.m.

* * * * *

17. We only allow waterfowl hunting on the Sharpe-Elva Water Management Units on specified Saturdays and Sundays during the State waterfowl season. We only allow hunting by individuals in possession of a refuge draw permit and their guests. State regulations and the following conditions apply:

* * * * *

v. We prohibit watercraft on the Sharpe-Elva Water Management Units, except for drawn permit holders to access their blinds and retrieve downed birds as needed.

* * * * *

D. Sport Fishing. * * *

* * * * *

2. The following apply to the Environmental Education and Recreation Area (EERA).

i. The EERA is a day-use area only.

ii. We only allow one rod and reel or pole and line for fishing per person.

iii. We prohibit the use of any type of watercraft.

iv. We prohibit the introduction or stocking of any species (see §27.52 of this chapter).

v. We prohibit the use of live fish for bait.

vi. We close designated portions of the EERA to all entry from November 1 to March 15.

vii. We allow the taking of largemouth bass, channel catfish, and bluegill in accordance with posted limits.

* * * * *

■ 13. Amend §32.37 Louisiana by:

■ a. Revising paragraphs A.6., A.9., A.10., removing paragraph A.14., redesignating paragraphs A.15. and A.16. as paragraphs A.14. and A.15., revising newly redesignated paragraph A.14., revising paragraphs B.1., B.2., B.5., and C.1., removing paragraph C.4., redesignating paragraphs C.5. through C.13. as paragraphs C.4. through C.12., revising newly redesignated paragraphs C.5., C.8., and C.11., and adding paragraph D.6. of Bayou Cocodrie National Wildlife Refuge;

■ b. Revising paragraphs A.10, B.2., B.3., and C.8. of Big Branch Marsh National Wildlife Refuge;

■ c. Revising paragraph B.4., the introductory text of paragraph C., revising paragraph C.1., removing paragraphs C.2. and C.5., and

redesignating paragraphs C.3. through C.8. as paragraphs C.2. through C.6. of Black Bayou Lake National Wildlife Refuge;

■ d. Revising paragraph A.1., revising paragraphs C.1., C.2., and D.11., and adding paragraph D.18. of Cameron Prairie National Wildlife Refuge;

■ e. Revising paragraphs A.1., A.2., A.3., A.8., A.19., A.26., A.28., B.1., B.2., C.1., C.3., adding paragraphs C.11. and C.12., and revising paragraph D.2. of Cat Island National Wildlife Refuge;

■ f. Revising paragraphs A.4., A.6., A.10., A.13., A.15., adding paragraphs A.18., A.19., revising paragraph B.1., removing paragraph B.5., redesignating paragraphs B.6. through B.11. as paragraphs B.5. through B.10., revising newly redesignated paragraphs B.5., B.7. and B.8., revising paragraphs C.1. and C.2., removing paragraph C.9., and redesignating paragraphs C.10. through C.13. as paragraphs C.9., through C.12., and revising paragraphs D.1. and D.8. of Catahoula National Wildlife Refuge;

■ g. Revising paragraphs A.2., A.4., A.11., removing paragraph A. 21., redesignating paragraphs A.22. and A.23, as paragraphs A.21. and A.22., revising newly redesignated paragraph A.22., removing paragraphs A.24., A.25., and A.27. and redesignating paragraph A.26. as paragraph A.23., paragraph A.28. as paragraph A.24., and paragraph A.29. as paragraph A.25., and adding paragraphs A.26. and A.27., revising paragraphs B.1. and B.2., removing paragraph B.3., redesignating paragraphs B.4. through B.8. as paragraphs B.3. through B.7., revising newly redesignated paragraph B.6., adding paragraph B.8., revising paragraphs C.1., C.2., and C.3., removing paragraphs C.5. through C.8., revising paragraphs D.1., D.2., D.6., D.13., removing paragraph D.14., and redesignating paragraph D.15. as paragraph D.14. of Grand Cote National Wildlife Refuge;

■ h. Revising paragraphs A.3. and A.10., removing paragraphs C.4. and C.10., and redesignating paragraphs C.5. through C.11. as paragraphs C.4. through C.9. of Lacassine National Wildlife Refuge;

■ i. Revising paragraphs A.2., A.4., A.10., A.13., A.15., adding paragraphs A.25. and A.26., revising paragraphs B.1., B.2., B.6., adding paragraph B.8., revising paragraphs C., D.1., and D.9. of Lake Ophelia National Wildlife Refuge; and

■ j. Revising paragraphs A.2. and D.6. through D.9., and adding paragraph D.10. of Sabine National Wildlife Refuge;

■ k. Revising paragraphs A.3., A.6., A.9., A.11., A.12., B.2., B.3., B.7., the introductory text of paragraph C., C.1. through C.9., and C.11. through C.22., and D.4. of Tensas River National Wildlife Refuge to read as follows:

§ 32.37 Louisiana.

* * * * *

Bayou Cocodrie National Wildlife Refuge

A. Migratory Game Bird Hunting. * * *

* * * * *

6. Any hunter under age 17 must possess and carry proof of completion of an approved Hunter Safety Course and be accompanied by an adult age 21 or older. Each adult may supervise (within sight of and in normal voice contact with) only one youth for all youth hunts except migratory birds. One adult may supervise no more than two youths while hunting migratory game birds.

* * * * *

9. Coyote, beaver, feral hog, and raccoon are incidental take species and, as such, you may take them during any open hunting season only with the weapon allowed for that season if you are a hunter having the required licenses and permits. There is no bag limit on coyote, feral hog, and beaver. State regulations apply on other incidental species.

10. Each hunter is responsible for reporting harvest information on a hunter information report card located at the self-clearing check station.

* * * * *

14. Special access ATV trails are available for mobility-impaired hunters and hunters age 60 and older with proper State permits. Hunters with mobility impairments must possess and carry a valid Disabled Hunter Permit/Card from the State to use special access ATV trails. Hunters must equip their ATVs with a red flag at least 6 inches (15 cm) wide and 12 inches (30 cm) long on a pole or staff extending at least 36 inches (90 cm) above the level of the seat. State requirements for ''Mobility-Impaired'' classification apply.

* * * * *

B. Upland Game Hunting. * * *

1. We allow squirrel and rabbit hunting during the State season except during the open youth hunt for deer, the youth lottery hunt, the primitive firearms hunt, and the lottery deer hunt.

2. Conditions A1, A3, and A7 through A15 apply.

* * * * *

5. Refuge users may enter the refuge no earlier than 4 a.m. and must exit the refuge by 2 hours after legal sunset except that raccoon and opossum hunters during the month of February may use the refuge at night.

* * * * *

C. Big Game Hunting. * * *

1. Conditions A1, A3, A7 through A15, and B5 apply.

* * * * *

5. We prohibit hunters leaving stands on the refuge until the opening day of archery season, and they must remove them by the end of the last day of the archery season. Hunters must clearly mark stands used on the refuge with the name and address of the owner of the stand. Hunters must remove portable stands from trees daily and must place free-standing stands in a nonhunting position daily (see §§27.93 and 27.94 of this chapter).

* * * * *

8. We allow deer hunting with primitive firearms subject to State regulations. Specific open dates will appear in the annual Refuge Hunting and Fishing Regulations Brochure.

* * * * *

11. We prohibit baiting or hunting over bait and the possession of bait or any nonnaturally occurring attractant on the refuge (see §32.2(h)).

* * * * *

D. Sport Fishing. * * *

* * * * *

6. The refuge boat ramp is open from 4 a.m. until 2 hours after legal sunset.

* * * * *

Big Branch Marsh National Wildlife Refuge

A. Migratory Game Bird Hunting. * * *

* * * * *

10. We prohibit hunting within 150 feet (45 m) of any road open to vehicle travel, residence, or Boy Scout Road. We prohibit hunting in refuge-designated closed areas, which are posted on the refuge and identified in the refuge hunt permits (see §27.31 of this chapter).

* * * * *

B. Upland Game Hunting. * * *

* * * * *

2. You may only use dogs for squirrel and rabbit after the close of the State archery deer season.

3. We only allow dogs to locate, point, and retrieve when hunting for quail.

* * * * *

C. Big Game Hunting. * * *

* * * * *

8. Conditions A5 through A8, and A10 through A13 apply, except in condition A7, one adult may supervise only one youth while hunting big game.

* * * * *

Black Bayou Lake National Wildlife Refuge

* * * * *

B. Upland Game Hunting. * * *

* * * * *

4. We allow the use of dogs to hunt squirrel and rabbit during that part of the State season that occurs in January and February.

* * * * *

C. Big Game Hunting. We allow archery hunting of white-tailed deer on designated areas of the refuge during the State season in accordance with State regulations subject to the following conditions:

1. Conditions A1, A2, A4, A6, A10, A11, and B7 apply.

* * * * *

Cameron Prairie National Wildlife Refuge

A. Migratory Game Bird Hunting. * * *

1. The waterfowl hunt consists of a youth (age 17 and younger) limited permit hunt only. We provide hunt dates and application requirements to the public through the media early each fall. We notify successful applicants prior to the applicable hunt season. The permitted youth must be present in the blind for his/her guest to hunt.

* * * * *

C. Big Game Hunting. * * *

1. Conditions A2 (for big game hunt, one adult may supervise no more than one youth hunter), A3, A4, A7, and A8 apply.

2. We prohibit entrance to the hunting area earlier than 4 a.m. Hunters must leave no later than 1 hour after legal sunset.

D. Sport Fishing. * * *

* * * * *

11. Allowed cast net size is in accordance with State regulations.

* * * * *

18. We allow cast netting for bait on both the East Cove Unit and the Gibbstown Unit in accordance with State regulations when the unit is open for public fishing only.

Cat Island National Wildlife Refuge

A. Migratory Game Bird Hunting. * * *

1. Hunters or anglers age 17 or older must possess and carry a valid, signed refuge Public Use Permit certifying that they understand and will comply with all regulations.

2. All users must obtain a daily use reporting card and place it in plain view on the dashboard of their vehicle so that the personal information is readable. Users must return cards to the refuge kiosk upon departure from the refuge.

3. Hunters may enter the refuge 2 hours before legal sunrise and must exit the refuge no later than 2 hours after legal sunset. We prohibit entering or remaining on the refuge before or after hours.

* * * * *

8. Hunters must report all harvested game on the back of the daily use reporting card prior to leaving the refuge.

* * * * *

19. Waterfowl hunters must remove boats, blinds, and decoys by 1 p.m. daily.

* * * * *

26. We prohibit possession of alcohol (see §32.2(j)).

* * * * *

28. We prohibit all commercial activities (including, but not limited to, guiding).

B. Upland Game Hunting. * * *

1. Conditions A1 through A3, A5 through A9, A11 through A17, A19, A21, A22, and A26 through A28 apply.

2. We allow the use of .22 caliber long rifles and shotguns to hunt upland game.

* * * * *

C. Big Game Hunting. * * *

1. Conditions A1 through A3, A5 through A9, A11 through A17, A19, A21, A22, and A26 through A28 apply.

* * * * *

3. There will be two or three lottery gun hunts (primitive firearms/rifle) in November and December (see refuge brochure for details). We will set hunt dates in July, and we will accept applications from August 1 through August 31. Applicants may apply for more than one hunt. There is a $5 application fee per person for each hunt application and a $15 fee per person per permit for each successful applicant. We will notify successful applicants by September 5.

* * * * *

11. We allow ''still hunting'' only. We prohibit man drives or use of dogs.

12. We prohibit use or possession of climbing spurs.

D. Sport Fishing. * * *

* * * * *

2. Conditions A1 through A3, A8, A9 (on the open portions of Wood Duck ATV trail for wildlife-dependent activities throughout the year), A13 through A16, A19, A21 through A23, and A26 through A28 apply.

* * * * *

Catahoula National Wildlife Refuge

A. Migratory Game Bird Hunting. * * *

* * * * *

4. We allow use of ATVs on designated trails (see §27.31 of this chapter) subject to refuge-specific dates and terms (see refuge hunting brochure for details). We prohibit the use of an ATV on graveled roads designated for motor vehicle traffic unless otherwise posted. We only allow ATVs for wildlife-dependent activities. We define an ATV as an off-road vehicle (not legal for highway use) with factory specifications not to exceed the following: weight 750 pounds (337.5 kg), length 85 inches (212.5 cm), and width 48 inches (120 cm). We restrict ATV tires to those no larger than 25 x 12 with a maximum 1 inch (2.5 cm) lug height and a maximum allowable tire pressure of 7 psi as indicated on the tire by the manufacturer.

* * * * *

6. We prohibit all migratory game bird hunting during deer-gun and primitive firearms hunts.

* * * * *

10. Youth hunters under age 18 must successfully complete a State-approved hunter education course. While hunting, each youth must possess and carry a card or certificate of completion. Each youth hunter must remain within sight and normal voice contact of an adult age 21 or older. Each adult must possess and carry a refuge permit and may supervise no more than two youth hunters.

* * * * *

13. We prohibit any person or group to act as a hunting or fishing guide, outfitter, or in any other capacity that any other individual(s) pays or promises to pay directly or indirectly for services rendered to any other person or persons hunting or fishing on the refuge, regardless of whether such payment is for guiding, outfitting, lodging, or club membership.

* * * * *

15. We only allow dogs to locate, point, and retrieve when hunting for migratory game birds. We only allow dogs after the last refuge deer primitive firearms hunt, except when we allow them for waterfowl hunting throughout the entire refuge waterfowl season.

* * * * *

18. We prohibit vehicles having wheels with a wheel-tire combination having a radius of 17 inches (42.5 cm) or more from the center of the hub (measured horizontal to ground).

19. Refuge hunting seasons apply to all navigable waterways that are wholly within the refuge boundaries.

B. Upland Game Hunting. * * *

1. Conditions A1, A4, A7 through A11, A13, A14, and A16 through A19 apply.

* * * * *

5. We prohibit squirrel, rabbit, and raccoon hunting during deer-gun and primitive firearms hunts.

* * * * *

7. At the Headquarters Unit, we close upland and big game hunting during high water conditions with an elevation of 42 feet (12.6 m) or above as measured at the Corps of Engineers center of the lake gauge on Catahoula Lake. At the Bushley Bayou Unit, we close upland and big game hunting during high water conditions with an elevation of 44 feet (13.2 m) or above as measured at the Corps of Engineers center of the lake gauge on Catahoula Lake.

8. On the Bushley Bayou Unit, we allow the use of dogs to hunt squirrel, rabbit, and raccoon only after the last refuge deer-primitive firearms hunt. We allow no more than two dogs per hunting party for squirrel hunting. Hunters may use only beagles that do not exceed 15 inches (37.5 cm) at front shoulders for rabbit hunting.

* * * * *

C. Big Game Hunting. * * *

1. Conditions A1, A4, A7 through A9, A11, A13, A14, A16 through A19, B4 through B7, and B10 apply.

2. At the Bushley Bayou Unit, we allow deer-archery hunting during the State archery season, except when closed during deer-gun and deer-primitive firearms hunts. We allow either-sex, deer primitive firearms hunting during the first segment of the State season for Area 1, weekdays only (Monday through Friday) and the third weekend after Thanksgiving Day. We allow either-sex, deer-gun hunting for the Friday, Saturday, and Sunday immediately following Thanksgiving Day and for the second weekend following Thanksgiving Day.

* * * * *

D. Sport Fishing. * * *

1. Conditions A4, A7, A9, A13, A14, A16, A17, and B6 apply.

* * * * *

8. We prohibit bank fishing on Bushley Creek and fishing in Black Lake, Dempsey Lake, Long Lake, Rhinehart Lake, and Round Lake during deer-gun and primitive firearms hunts. We prohibit fishing in Black Lake, Dempsey Lake, Long Lake, Rhinehart Lake, and Round Lake during waterfowl hunts.

* * * * *

Grand Cote National Wildlife Refuge

A. Migratory Game Bird Hunting. * * *

* * * * *

2. Hunters must check-in and check out subject to refuge-specific terms (see refuge hunting brochure for details).

* * * * *

4. Youth hunters under age 18 must successfully complete a State-approved hunter education course. While hunting, each youth must possess and carry a card or certificate of completion. Each youth hunter must remain within sight and normal voice contact of an adult age 21 or older. Each adult may supervise no more than two youth hunters during waterfowl hunts.

* * * * *

11. We prohibit hunting within 150 feet (45 m) of any public road, refuge road, trail or ATV trail, building, residence, or designated public facility.

* * * * *

22. The refuge will hold lotteries to hunt waterfowl from blinds on designated sections of the refuge during the regular State waterfowl season subject to refuge-specific dates, terms, and selection process (see refuge hunting brochure for details). Youth ages 10 to 17 and their adult co-applicant supervisors are given preference in these lottery hunts. Once selected in the lottery, the youth co-applicant must be present on the day of the hunt for the permit to be valid. In the event that we receive no youth applications for a given hunting date, we will fill blinds with adult applicants for that date. All hunts are subject to water availability.

* * * * *

26. Hunting is subject to closure due to high water conditions.

27. We prohibit any person or group to act as a hunting guide, outfitter, or in any other capacity that any other individual(s) pays or promises to pay directly or indirectly for services rendered to any other person or persons hunting on the refuge, regardless of whether such payment is for guiding, outfitting, lodging, or club membership.

B. Upland Game Hunting. * * *

1. Conditions A1 through A11, and A13 through A16, A20, and A24 through A28 apply.

2. We allow rabbit hunting during the State season.

* * * * *

6. We allow the use of .22 caliber or less rimfire rifles or shotguns to hunt upland game.

* * * * *

8. We require hunters participating in special dog seasons for rabbit to wear a minimum of an unbroken, hunter-orange cap. All other hunters and archers (while on the ground), except waterfowl hunters, also must wear an unbroken, hunter-orange cap during the special dog seasons for rabbit.

C. Big Game Hunting. * * *

1. Conditions A1 through A11, and A13 through A16, A20, A24 through A28, B6, and B7 apply.

2. We allow archery hunting in designated units subject to refuge-specific dates and harvest restrictions (see refuge hunting brochure for details).

3. We allow only portable deer stands (see §§27.93 and 27.94 of this chapter). Deer stands must have the owner's name, address, and phone number clearly printed on the stand. Hunters may erect stands 2 days before hunting season; however, they must place stands in a nonhunting position at the conclusion of each hunt and remove them on the last day of the State archery deer season.

* * * * *

D. Sport Fishing. * * *

1. Conditions A1, A5, A6, A10, A11, A13 through A15, A19, A20, and A26 apply.

2. We only allow bank fishing in Coulee Des Grues along Little California Road.

* * * * *

6. We allow recreational crawfishing subject to refuge-specific dates and terms (see refuge hunting brochure for details).

* * * * *

13. We prohibit the harvest of frog, turtle, snake, or mollusk (see §27.21 of this chapter).

* * * * *

Lacassine National Wildlife Refuge

A. Migratory Game Bird Hunting. * * *

* * * * *

3. We allow hunting Wednesdays, Thursdays, Saturdays, and Sundays of the State teal and duck seasons (western zone). We close the refuge to hunting during the ''goose only'' waterfowl season. State daily and season harvest limits apply.

* * * * *

10. Limited permit waterfowl hunting consists of youth (age 17 and younger) and senior (age 55 and older) lottery hunts. We provide hunt dates and application information to the public through the media early each fall. We notify successful applicants prior to the applicable hunt season. The permitted youth and/or senior must be present in the blind for his/her guest to hunt. We

allow only successful applicants and their guests within Unit B.

* * * * *

Lake Ophelia National Wildlife Refuge

A. Migratory Game Bird Hunting. * * *

* * * * *

2. Hunters must check-in and check out subject to refuge-specific terms (see refuge hunting brochure for details).

* * * * *

4. Youth hunters under age 18 must successfully complete a State-approved hunter education course. While hunting, each youth must possess and carry a card or certificate of completion. Each youth hunter must remain within sight and normal voice contact of an adult age 21 or older. Each adult may supervise no more than two youth hunters during waterfowl hunts.

* * * * *

10. We prohibit hunting or shooting within 150 feet (45 m) of any public road, refuge road, ATV trail, hiking trail, building, residence, designated public facility, or active oil well site, production facility, or equipment.

* * * * *

13. We prohibit all other hunting during refuge lottery primitive firearms deer hunts.

* * * * *

15. We allow motors up to 25 hp in Possum Bayou (north of Boat Ramp), Palmetto Bayou, Duck Lake, Westcut Lake, Pt. Basse, and Nicholas Lake.

* * * * *

25. We prohibit vehicles having wheels with a wheel-tire combination having a radius of 17 inches (42.5 cm) or more from the center of the hub (measured horizontal to ground).

26. We prohibit any person or group to act as a hunting guide, outfitter, or in any other capacity that any other individual(s) pays or promises to pay directly or indirectly for services rendered to any other person or persons hunting on the refuge, regardless of whether such payment is for guiding, outfitting, lodging or club membership.

B. Upland Game Hunting. * * *

1. Conditions A1 through A16, A19, and A22 through A26 apply.

2. We allow squirrel and rabbit hunting in Hunt Unit 2B subject to refuge-specific dates and terms (see refuge hunting brochure for details).

* * * * *

6. We allow the use of .22 caliber or less rimfire rifles or shotguns to hunt upland game.

* * * * *

8. We require hunters participating in special dog seasons for rabbit and squirrel to wear a minimum of an unbroken hunter-orange cap. All other hunters and archers (while on the ground), except waterfowl hunters, also must wear an unbroken hunter-orange cap during the special dog seasons for rabbit and squirrel.

C. Big Game Hunting. We allow hunting of white-tailed deer and turkey on designated areas of the refuge as shown on the refuge hunting brochure map in accordance with State regulations subject to the following conditions:

1. Conditions A1 through A3, A5 through A16, A19, A22 through A26, B7, and B8 apply.

2. We only allow portable deer stands (see §§27.93 and 27.94 of this chapter). We require hunters to permanently attach their name, address, and phone number to the deer stand. Hunters may erect stands 2 days before hunting season; however, they must place stands in a nonhunting position at the conclusion of each hunt and remove them on the last day of the State archery deer season.

3. We allow archery hunting in Units 1A, 1B, 2A, and 2B subject to refuge-specific date and harvest restrictions (see refuge hunting brochure for dates).

4. We allow youth to hunt deer in the closed area during the lottery youth deer season. These gun hunts are subject to the refuge-specific dates, terms, and selection process (see refuge hunting brochure for details). Youth selected in prior years' hunts may not apply.

5. We prohibit the use of organized drives for taking or attempting to take game or using pursuit dogs.

6. We allow archery equipment only during designated seasons.

7. We prohibit the use of dogs to trail wounded deer.

8. We allow electric-powered or nonmotorized boats in Lake Ophelia from November 1 through December 15 (see refuge hunting brochure for details).

9. You may kill one deer of either sex per day during the refuge archery season. Deer killed on the refuge count towards the State bag limit.

10. We require a minimum of 400 square inches (2,600 cm^2) of unbroken hunter orange as the outermost layer of clothing on the chest and back, and in addition we require a hat or cap of unbroken hunter orange during all deer lottery youth gun hunts and quota primitive firearms hunts. Deer hunters hunting from concealed ground blinds must display above or around their blinds a minimum of 400 square inches of hunter orange which is visible from 360°.

11. Youth hunters under age 18 must successfully complete a State-approved hunter education course. While hunting, each youth must possess and carry a card or certificate of completion. Each youth hunter must remain within sight and normal voice contact of an adult age 21 or older. Each adult may supervise only one youth hunter during big game hunts.

12. There will be lottery deer primitive firearm hunts subject to refuge-specific dates, terms, and selection process (see refuge hunting brochure for details). Applicants may not apply for more than one hunt. There is a $5 nonrefundable application fee per person for each hunt application.

13. We prohibit driving or screwing nails, spikes, or other metal objects into trees or hunting from any tree in which such an object has been driven (see §32.2(i)).

14. We only allow turkey hunting during the first 14 days of the State season until 12 p.m. (noon).

15. We allow the use and possession of lead shot for turkey hunting (see §32.2(k)).

16. We prohibit the possession of saws, saw blades, or machetes.

D. Sport Fishing. * * *

1. Conditions A1, A5 through A9, A19 (see §27.93 of this chapter), and A22 through A25 apply.

* * * * *

9. We prohibit the harvest of frog, turtle, snake, or mollusk (see §27.21 of this chapter).

* * * * *

Sabine National Wildlife Refuge

A. Migratory Game Bird Hunting. * * *

* * * * *

2. We allow waterfowl hunting only on Wednesdays, Thursdays, Saturdays, and Sundays during the State teal season and during the regular State waterfowl season for the west zone.

* * * * *

D. Sport Fishing. * * *

* * * * *

6. Conditions A7, A9, A13 (fishing guide), and A15 apply.

7. We allow anglers to enter the refuge by boat from 1 hour before legal sunrise to 1 hour after legal sunset in order to access fishing areas. We prohibit fishing activities, however, before legal sunrise and after legal sunset.

8. Crabbing: We allow recreational crabbing in designated areas of the refuge subject to the following conditions:

i. You must take crabs only with cotton hand lines or drop nets up to 24 inches (60 cm) outside diameter. We prohibit use of floats on crab lines.

ii. You must remove all hand lines, drop nets, and bait (see §27.93 of this chapter) from the refuge upon leaving.

iii. We allow a daily limit on crabs of 5 dozen (60) per vehicle or boat.

9. Cast Netting: We allow cast netting in designated areas of the refuge only during the Louisiana Inland Shrimp Season subject to the following conditions:

i. We allow cast netting only from 12 p.m. (noon) to legal sunset.

ii. We only allow recreational cast netting for shrimp. You must immediately return all fish, crabs, or other incidental take (by catch) to the water before continuing to cast net.

iii. We allow a daily shrimp limit of 5 gallons (19 L) of heads-on shrimp per day, per vehicle, or per boat.

iv. Shrimp must remain in your actual custody while on the refuge.

v. You may cast net only from the bank and wharves at Hog Island Gully and Blue Crab Public Use Areas and 1A-1B Public Use Areas or at sites along Hwy. 27 that provide developed safe access and that we do not post and sign as closed areas.

vi. We prohibit cast netting at or around the Northline and West Cove Public Use Area or on or around any boat launch.

vii. You may cast net from a boat throughout the refuge except where posted and signed as closed.

viii. We prohibit reserving a place or saving a space for yourself or others by any means to include placing unattended equipment in designated cast-netting areas.

ix. We prohibit swimming and/or wading in the refuge canals or wading in the canals and waterways.

10. We prohibit the taking of turtle (see §27.21 of this chapter).

Tensas River National Wildlife Refuge

A. Migratory Game Bird Hunting. * * *

* * * * *

3. We allow refuge hunters to enter the refuge no earlier than 4 a.m., and they must leave no later than 2 hours after legal sunset unless they are participating in the refuge raccoon hunt.

* * * * *

6. We prohibit permanent or pit blinds on the refuge. You must remove all blind materials and decoys following each day's hunt.

* * * * *

9. We prohibit baiting or the possession of bait while on the refuge at any time (see §32.2(h)).

* * * * *

11. While visiting the refuge, we prohibit: spotlighting (see §27.73 of this chapter), littering (see §27.94 of this chapter), fires (see §27.95(a) of this chapter), trapping, man-drives for game, possession of alcoholic beverages in hunting areas (see §§32.2(j) and 27.81 of this chapter), possession of open alcoholic beverage containers, flagging, engineers tape, paint, unleashed pets (see §26.21(b) of this chapter), and parking/blocking trail and gate entrances (see §27.31(h) of this chapter). We also prohibit hunting or shooting within 150 feet (45 m) of a designated public road, maintained road, trail, fire breaks, dwellings, and above-ground oil and gas production facilities. We define a maintained road or trail as one which has been mowed, disked, or plowed.

12. We require a Tensas River National Wildlife Refuge Access Permit for all migratory bird hunts. You may find the permit on the front of the Public Use Regulations brochure.

* * * * *

B. Upland Game Hunting. * * *

* * * * *

2. We allow squirrel and rabbit hunting with and without dogs. We will allow hunting without dogs from the beginning of the State season and typically ending the day before the refuge deer primitive firearms hunt. We do not require you to wear hunter orange during the squirrel and rabbit hunt without dogs. Squirrel and rabbit hunting with or without dogs will begin the day after the refuge deer primitive firearms hunt and will end the last day of the refuge squirrel season, which typically ends on February 15.

3. We close squirrel and rabbit hunting during the following gun hunts for deer: refugewide youth hunt, primitive firearms hunt, and modern firearms hunt.

* * * * *

7. We require all upland game hunters to report their game immediately after each hunt at the check station nearest to the point of take.

* * * * *

C. Big Game Hunting. We allow hunting of white-tailed deer and turkey on designated areas of refuges in accordance with State regulations subject to the following conditions:

1. Deer archery season will begin the first Saturday in November and will conclude on the last day of the State archery season (typically January 31). We prohibit archery hunting during the following refuge-wide deer hunts: youth gun hunt and modern firearms hunts. We prohibit possession of pods, drug-tipped arrows, or other chemical substances.

2. The deer primitive firearms season will last 3 days and occur on a Monday, Tuesday, and Wednesday in January. We will allow in-line primitive firearms and magnified scopes.

3. We will conduct two 2–day quota, modern-firearms hunts for deer typically in the month of December. Hunt dates and permit application procedures will be available at refuge headquarters in July. We restrict hunters using a primitive firearm during this hunt to areas where we allow modern firearms.

4. We will conduct guided quota youth deer hunts and guided quota deer hunts for the physically challenged in the Greenlea Bend area typically in December and January. Hunt dates and permit application procedures will be available at the refuge headquarters in July.

5. We will conduct a refuge-wide youth deer hunt during the Statewide youth hunt weekend typically in November. Hunt dates will be available at refuge headquarters in July. Each participating youth must be ages 8 to 15, must possess proof of completion of an approved Hunter Safety Course, and must be accompanied at all times by an adult age 21 or older. Each hunting adult can supervise only one youth.

6. Hunters may take only one deer (one buck or one doe) per day during refuge deer hunts except during guided youth and physically challenged hunts where the limit will be one antlerless and one antlered deer per day.

7. We allow turkey hunting the first 16 days of the State turkey season. We will conduct a youth turkey hunt the Saturday and Sunday before the regular State turkey season. Hunters may harvest two bearded turkeys per season. We allow the use and possession of lead shot while turkey hunting on the refuge. We allow use of nonmotorized bicycles on designated all-terrain vehicle trails. Although you may hunt turkey without displaying a solid-hunter-orange cap or vest during your turkey hunt, we do recommend its use.

8. We allow refuge hunters to enter the refuge no earlier than 4 a.m., and they must depart no later than 2 hours after legal sunset unless they are participating in the refuge raccoon hunt.

9. In areas posted ''Area Closed,'' we prohibit big game hunting at any time. We close ''Closed Areas'' (designated on the Public Use Regulations brochure map) to all hunts. We prohibit shooting into or across any closed area with a gun or archery equipment.

* * * * *

11. We allow primitive firearms hunters to discharge their primitive firearms at the end of each hunt safely into the ground at least 150 feet (135 m)

from any designated public road, maintained road, trail, fire break, dwelling, or above-ground oil and gas production facility. We define a maintained road or trail as one that has been mowed, disked, or plowed, or one that is free of trees.

12. We allow all-terrain vehicle travel on designated trails for access typically from September 15 to the last day of the refuge squirrel season. Designated trails are open from 4 a.m. to no later than 2 hours after legal sunset unless otherwise specified. We define an ATV as an off-road vehicle (not legal for highway use) with factory specifications not to exceed the following: weight 750 pounds (338 kg), length 85 inches (213 cm), and width 48 inches (120 cm). We restrict ATV tires to those no larger than 25x12 with a 1-inch (2.5-cm) lug height and maximum allowable tire pressure of 7psi. We require an affixed refuge all-terrain vehicle permit that hunters may obtain from the refuge headquarters typically in July. Hunters using the refuge physically challenged all-terrain trails must possess the State's Physically Challenged Program Hunter Permit. Additional physically challenged access information will be available at the refuge headquarters.

13. We allow nonmotorized boats, electric motors, and boats with motors 10 horsepower or less in refuge lakes, streams, and bayous. We require that boat passengers wear personal flotation devices when using a boat to access the refuge. Hunters must equip all motorized boats with navigation lights and utilize them according to State regulations. We prohibit storage of boats on the refuge. Hunters must remove them daily.

14. We prohibit deer hunters leaving deer stands unattended before the opening day of the refuge archery season. They must remove stands by the end of the last day of the refuge archery season. Hunters must clearly mark stands left unattended on the refuge with the name and address of the stand owner. Hunters must remove portable stands from trees daily and place freestanding stands in a nonhunting position when unattended.

15. We require deer hunters using primitive firearms or modern firearms to display a solid- hunter-orange cap on their head and a solid-hunter-orange vest over their outermost garment covering their chest and back. Hunters must display the solid-hunter-orange items the entire time while in the field.

16. We require primitive firearms and modern firearms hunters using ground blinds to display outside of the blind 400 square inches (2,600 cm^2) of hunter orange, which is visible from all sides of the blind. Hunters must wear orange vests and hats as their outermost garments while inside the blind.

17. We require all deer and turkey hunters to report their game immediately after each hunt at the check station nearest to the point of take.

18. We prohibit baiting or the possession of bait while on the refuge at any time (see §32.2(h)). We prohibit possession of chemical baits or attractants used as bait.

19. We prohibit any hunter to use climbing spikes or hunt from a tree that contains screw-in steps, nails, screw-in umbrellas, or any metal objects that could damage trees or to possess any such items (see §32.2(i)).

20. While visiting the refuge, we prohibit: spotlighting (see §27.73 of this chapter), littering (see §27.94 of this chapter), fires (see §27.95 of this chapter), trapping, man-drives for game, possession of alcoholic beverages in hunting areas, possession of open alcoholic beverages (see §§32.2(j) and 27.81 of this chapter), flagging, engineer's tape, paint, unleashed pets (see §26.21(b) of this chapter), parking/blocking trail and gate entrances (see §27.31(h) of this chapter). We also prohibit hunting within 150 feet (45 m) of a designated public road, maintained road, trail, fire break, dwelling, and above-ground oil and gas production facility. We define a maintained road or trail as one that has been mowed, disked, or plowed.

21. We require a Tensas River National Wildlife Refuge Access Permit for all big game hunts. Hunters may find the permit on the front of the Public Use Regulations brochure.

22. We prohibit field dressing of game within 150 feet (45 m) of parking areas, maintained roads, and trails.

D. Sport Fishing. * * *

* * * * *

4. We allow anglers to operate nonmotorized boats, electric motors, and boats with motors 10 horsepower or less in refuge lakes, streams, and bayous. We require that boat passengers wear personal flotation devices when using a boat under power to access the refuge. Anglers must equip all motorized boats with navigation lights and use them according to State regulations. We prohibit boat storage on the refuge, and anglers must remove boats daily.

* * * * *

■ 14. Amend §32.39 Maryland by revising Patuxent Research Refuge to read as follows:

§ 32.39 Maryland.

* * * * *

Patuxent Research Refuge

A. Migratory Game Bird Hunting. We allow hunting of goose, duck, and dove on the North Tract in accordance with State regulations subject to the following conditions:

1. We require a hunting permit. We issue permits through our Cooperating Association Meade Natural Heritage Association (MNHA) at the refuge Hunting Control Station (HCS). MNHA charges a fee for each permit. Contact refuge headquarters for more information.

2. We publish the Refuge Hunting Regulations, which includes the daily and yearly bag limits and hunting dates, in late summer. We provide you with a copy of the regulations with your fee permit, and we require you to know the specific hunt seasons and regulations.

3. We require hunters, age 17 or younger, to have a parent or guardian cosign to receive a hunting permit.

4. We require hunters, age 17 or younger, to be accompanied in the field by an adult possessing a refuge hunting permit, age 21 or older.

5. You must check-in and out at the HCS and exchange your hunting permit for a daily hunting pass and a vehicle pass every time you enter or exit the refuge. This includes breakfast, lunch, dinner, and other breaks if you leave your designated hunting area.

6. You must use designated and maintained roads for vehicular traffic.

7. You must park within the selected area specified and not block traffic or gates (see §27.31(h) of this chapter).

8. We restrict you to the selected area and activity until you check out at the HCS.

9. We prohibit hunting on or across any road (paved, gravel, opened, and/or closed), within 50 yards (45 m) of a road (paved, gravel, dirt, opened and/or closed), within 150 yards (135 m) of any building or shed, and within 25 yards (22.5 m) from any designated ''No Hunting'' or ''Safety Zone'' areas, except:

i. You may hunt from the road, 50 yards (135 m) beyond the gate at Blue Heron Pond;

ii. You may hunt from the road, 50 yards (135 m) beyond the barricade at Wood Duck Pond;

iii. You may hunt from any refuge permanent photo/hunt blind.

iv. You may hunt from the roadside, at designated areas, if you possess a Maryland State ''Hunt from a Vehicle Permit.''

10. You must wear, in a visible manner and at all times, a minimum of 400 square inches (2,600 cm^2) of solid-colored, fluorescent hunter orange on

your head, chest, and back except when noted otherwise. Your solid-colored, fluorescent hunter orange must be visible 360° while carrying-in and carrying-out equipment (e.g., portable blinds). ''Jump shooters'' must wear at least a solid-colored, fluorescent hunter-orange hat or cap while hunting. If you stop and stand, you may remove it.

11. We allow the taking of only Canada goose during the early and late resident Canada goose seasons.

12. We prohibit hunting of goose, duck, and dove during the early deer muzzleloader seasons that occur in October and all deer firearms seasons including the Junior Deer Hunt.

13. We require waterfowl hunters to use retrieving dogs while hunting duck and goose within 50 yards (45 m) of the following impounded waters: Bailey Bridge Marsh, Blue Heron Pond, Lake Allen, New Marsh, and Wood Duck Pond.

14. We require dogs to be under the immediate control of their owner at all times (see §26.21(b) of this chapter). Law enforcement officers may seize or dispatch dogs running loose or unattended (see §28.43 of this chapter).

B. Upland Game Hunting. We allow hunting of turkey, gray squirrel, eastern cottontail rabbit, and woodchuck on the North Tract and turkey on the Central Tract in accordance with State regulations subject to the following conditions:

1. Conditions A1 through A10 apply.

2. Hunters may only possess approved nontoxic shot while in the field (see §32.2(k)).

3. We prohibit hunting of upland game during the deer muzzleloader and firearms seasons, including the Junior Deer Hunt.

4. You must wear, in a visible manner and at all times, a minimum of 400 square inches (2,600 cm^2) of solid-colored, fluorescent hunter orange on your head, chest, and back. Spring turkey hunters are exempt from wearing the hunter orange.

5. We allow the use of a bow and arrow for turkey hunting.

6. We require turkey hunters to use #4, #5, or #6 nontoxic shot or vertical bows.

7. We select turkey hunters by a computerized lottery for youth, disabled, mobility impaired, and general public hunts. We require documentation for disabled and mobility-impaired hunters.

8. We require turkey hunters to show proof they have attended a turkey clinic sponsored by the National Turkey Federation.

9. We require turkey hunters to pattern their weapons prior to hunting. Contact refuge headquarters for more information.

C. Big Game Hunting. We allow hunting of white-tailed deer on the North, Central, and South Tracts in accordance with State regulations subject to the following conditions:

1. Conditions A1 through A10 apply.

2. Prior to issuing a hunting permit, we require you to pass a yearly proficiency test with each weapon used.

3. We only allow the use of a shotgun, muzzleloader, or bow and arrow according to Refuge Hunting Regulations.

i. We require muzzleloaders to be .40 caliber or larger with not less than 60 grains of black powder or a black powder equivalent.

ii. We prohibit the discharging of weapons after legal shooting hours, including the unloading of muzzleloaders.

4. We require (when transporting or storing) longbows and recurve bows to be unstrung; and compound and crossbows must be locked in such a way to render them inoperable and/or cased, with no arrows nocked.

5. We prohibit possession or use of buckshot.

6. You must wear, in a visible manner and at all times, a minimum of 400 square inches (2,600 cm^2) of solid-colored, fluorescent hunter orange on your head, chest, and back except when noted otherwise. Your solid-colored, fluorescent hunter orange must be visible 360 degrees while carrying-in and carrying-out equipment (e.g., portable tree stands). Bow hunters must follow this requirement when walking from their vehicle to their hunting location and while tracking. We do not require bow hunters to wear the solid-colored, fluorescent hunter orange when positioned to hunt except during the North Tract Junior Deer Hunt and the late deer Muzzleloader Season when they must wear it at all times.

7. All bucks harvested must have a 15-inch (37.5-cm) minimum outside antler spread.

8. All deer harvested will have a jaw extracted at the HCS before leaving the refuge.

9. We allow the use of portable tree stands equipped with a full-body safety harness. You must wear the full-body safety harness while in the tree stand. The stand must be at least 10 feet (3 m) off the ground. You must remove tree stands from the refuge. You must use tree stands when hunting South and Central Tracts. We will make limited accommodations for disabled hunters for Central Tract lottery hunts.

10. We prohibit the use of dogs to hunt or track wounded deer.

11. If you wish to track wounded deer, beyond 1½ hours after legal sunset, you must gain consent from a refuge law enforcement officer. We prohibit tracking 2½ hours after legal sunset. You must make a reasonable effort to retrieve the wounded deer. This may include next-day tracking except Sundays and Federal holidays.

12. We prohibit deer drives or anyone taking part in any deer drive. We define a ''deer drive'' as an organized or planned effort to pursue, drive, chase or otherwise frighten or cause deer to move in the direction of any person or persons who are part of the organized or planned hunt and known to be waiting for the deer. We also prohibit organized deer drives without a standing hunter.

13. **North Tract**: We allow shotgun, muzzleloader, and bow hunting in accordance with the following regulations: Conditions C1 through C13 apply.

14. **Central Tract**:

i. **Headquarters/MR Lottery Hunt**: We only allow shotgun and bow hunting in accordance with the following regulations:

a. Conditions C1, C2, and C4 through C13 apply.

b. We select Central Tract shotgun and bow hunters by a computerized lottery. We will assign you a specific hunting location.

ii. **Schafer Farm Hunt**: We only allow bow hunting in accordance with the following regulations: Conditions C1, C2, and C4 through C13 apply.

15. **South Tract**: We allow shotgun, muzzleloader, and bow hunting in accordance with the following regulations:

i. Conditions C1 through C13 apply.

ii. You must access South Tract hunting areas A, B, and C off Springfield Road through the Old Beltsville Airport; and South Tract hunting area D from MD Rt. 197 through Gate #4. You must park in designated parking areas.

iii. We prohibit driving or parking along the entrance and exit roads, to and from the National Wildlife Visitor Center, and parking in the visitor center parking lot when checked in to hunt any area.

D. Sport Fishing. We allow sport fishing in accordance with Maryland State hook and line fishing regulations subject to the following conditions:

1. We require all anglers, age 16 and older, to obtain a free refuge fishing permit as well as a Maryland State fishing license, which must be carried with them at all times while fishing. Organized groups may request a group permit. The group leader must carry a copy of the permit and stay with the group at all times while fishing.

2. We publish the Refuge Fishing Regulations, which includes the daily and yearly creel limits and fishing dates, in early January. We provide a copy of the regulations with your free refuge fishing permit, and we require you to know the specific fishing regulations.

3. Anglers must carry a copy of the refuge fishing permit and their Maryland State fishing license in the field.

4. Anglers must display a copy of the refuge fishing permit in the vehicle windshield.

5. We require anglers, age 17 or younger, to have a parent or guardian cosign to receive a fishing permit.

6. We require anglers, age 17 or younger, to be accompanied in the field by an adult possessing a fishing permit, age 21 or older, and they must maintain visual contact with each other within a 50-yard (45-m) distance.

7. We prohibit the use or possession of lead sinkers.

8. We prohibit the use or possession of alcoholic beverages (see §27.81 of this chapter and §32.2(j)).

9. Anglers may take three youths, age 15 or younger, to fish under their permit and in their presence and control.

10. We allow the use of earthworms as the only source of live bait. We prohibit bloodworms, fish, or other animals or parts of animals to be used as bait.

11. We prohibit harvesting bait on the refuge.

12. Anglers must attend all fishing lines.

13. Anglers may take the following species: chain pickerel, catfish, golden shiner, eel, and sunfish (includes bluegill, black crappie, warmouth, and pumpkinseed). Maryland State daily harvest limits apply unless otherwise noted.

14. We require all bluegill taken to be 6 inches (15 cm) or larger.

15. We allow take of one chain pickerel per day.

16. Anglers must release all bass that are caught.

17. We prohibit fishing from all bridges except the downstream side of Bailey Bridge.

18. **North Tract**: We allow sport fishing in accordance with the following regulations:

i. Conditions D1 through D17 apply.

ii. We allow sport fishing at Lake Allen, Blue Heron Pond, Rieve's Pond, New Marsh, Cattail Pond, Bailey Bridge (downstream side) and Little Patuxent River (downstream only from Bailey's Bridge).

iii. We require a free North Tract refuge access permit that anglers must carry and possess at all times and must return to the North Tract Visitor Contact Station (VCS) at the end of each visit. If you are age 17 or younger, you must have a parent or guardian countersign to receive an access permit.

iv. Anglers may fish year-round at Lake Allen, Blue Heron Pond, Rieve's Pond, New Marsh, Cattail Pond, Bailey Bridge (downstream side) and the Little Patuxent River (downstream only from Bailey Bridge) except Monday through Saturday from September 1 through January 31 during the hunting season. We also reserve the right to close Lake Allen at any time.

v. We allow wading, for fishing purposes only, downstream from Bailey Bridge on the Little Patuxent River. We prohibit wading in all other bodies of water.

vi. We prohibit the use of any type of watercraft.08SER2

19. **South Tract**: We allow sport fishing in accordance with the following regulations:

i. Conditions D1 through D16 apply.

ii. Anglers must park their vehicles in the parking lot located behind Refuge Gate #8 off MD Rt. 197. Anglers may not access Cash Lake from the National Wildlife Visitor Center (NWVC).

iii. We allow sport fishing at the pier and designated shorelines at Cash Lake. See Refuge Fishing Regulations for areas opened to fishing. We post other areas with ''No fishing beyond this point'' signs.

iv. Anglers may fish from mid-June until mid-October, as posted.

v. We allow fishing between the hours of 6:00 a.m. and 8:00 p.m. June through August and between the hours of 7:00 a.m. and 6:30 p.m. September and October.

vi. Anglers may use watercraft for fishing in accordance with the Maryland State boating laws subject to the additional following conditions:

a. You may use car-top boats 14 feet (4.2 m) or less, and canoes.

b. You may only use electric motors, 4 HP or less.

c. We prohibit sailboats, kayaks, and inflatable boats.

d. Maryland State law requires personal flotation devices (PFDs).

vii. We prohibit boat trailers except by individuals possessing a refuge handicapped permit.

■ 15. Amend §32.43 Mississippi by:

■ a. Adding paragraph A.12., revising paragraphs B.1. and C.1., and adding paragraph C.6. of Grand Bay National Wildlife Refuge;

■ b. Revising paragraph A.15. of Hillside National Wildlife Refuge;

■ c. Revising paragraphs A.15. and C.5., removing paragraph C.18., and revising paragraph D.9. of Morgan Brake National Wildlife Refuge; and

■ d. Revising paragraphs A.17. and D.6. of Panther Swamp National Wildlife Refuge to read as follows:

§ 32.43 Mississippi.

* * * * *

Grand Bay National Wildlife Refuge

A. Migratory Game Bird Hunting. * * *

* * * * *

12. We prohibit the use of airboats, mudboats, motorized pirogues, and air-cooled propulsion engines on the refuge.

B. Upland Game Hunting. * * *

1. Conditions A4 through A7 and A10 through A12 apply.

* * * * *

C. Big Game Hunting. * * *

1. Conditions A4 through A7 and A9 through A12 apply.

* * * * *

6. We prohibit the use of dogs to hunt deer and feral hog.

* * * * *

Hillside National Wildlife Refuge

A. Migratory Game Bird Hunting. * * *

* * * * *

15. We allow ATVs only on designated trails (see §27.31 of this chapter) (see refuge brochure map).

* * * * *

Morgan Brake National Wildlife Refuge

A. Migratory Game Bird Hunting. * * *

* * * * *

15. We allow ATVs only on designated trails (see §27.31 of this chapter) (see refuge brochure map).

* * * * *

C. Big Game Hunting. * * *

* * * * *

5. Conditions A5 through A7, A14, A15, and B6 apply.

* * * * *

D. Sport Fishing. * * *

* * * * *

9. Condition A14 applies.

* * * * *

Panther Swamp National Wildlife Refuge

A. Migratory Game Bird Hunting. * * *

* * * * *

17. We allow ATVs, beginning on the third Saturday in September through February 28, only on designated trails (see §27.31 of this chapter) (see refuge brochure map).

* * * * *

D. Sport Fishing. * * *

* * * * *

6. We allow ATVs for fishing access on designated gravel roads when we close such roads to vehicular traffic.

* * * * *

■ 16. Amend §32.45 Montana by revising paragraphs A.1., A.10., adding paragraphs A.17. and A.18., and revising paragraph C.2. of Lee Metcalf National Wildlife Refuge to read as follows:

§ 32.45 Montana.

* * * * *

Lee Metcalf National Wildlife Refuge

A. Migratory Game Bird Hunting. * * *

1. Hunting Access: Hunters must enter and exit the hunt area through the access parking lot. Hunters must park at this access point and at the numbered parking space corresponding to a blind. Hunters must walk to the blind along mowed trails designated in the hunting leaflet. We open the access parking lot at 3:30 a.m. to hunters who intend to immediately hunt on the refuge. We prohibit wildlife observation, scouting, and loitering at the access point.

* * * * *

10. You must conduct all hunting from within the hunting blind.

* * * * *

17. Hunting blinds require the use of a minimum of six decoys with the exception of blinds #1, 2, 7, 14, and 15.

18. We will allow the use of a removable personal blind within the immediate mowed area around field blind #13.

* * * * *

C. Big Game Hunting. * * *

* * * * *

2. We will allow archery hunting in the Waterfowl Hunt Area in September except during the youth waterfowl hunt weekend. We will allow archery hunting on Mondays and Thursdays in the Waterfowl Hunting Area during waterfowl hunting season.

* * * * *

■ 17. Amend §32.47 Nevada by:

■ a. Removing Stillwater Wildlife Management Area; and

■ b. Revising paragraph A.5. and adding paragraphs B.3. and B.4. of Stillwater National Wildlife Refuge to read as follows:

§ 32.47 Nevada.

* * * * *

Stillwater National Wildlife Refuge

A. Migratory Game Bird Hunting. * * *

* * * * *

5. We prohibit boating outside of the waterfowl and youth waterfowl hunting season except in Willow Lake where we allow nonmotorized boating all year.

* * * * *

B. Upland Game Hunting. * * *

* * * * *

3. We prohibit the use or possession of lead shot (see §32.2(k)).

4. We prohibit hunting after legal sunset.

* * * * *

■ 18. Amend §32.48 New Hampshire by revising the introductory text of paragraph A. and revising paragraph A.5. of Silvio O. Conte National Fish and Wildlife Refuge to read as follows:

§ 32.48 New Hampshire.

* * * * *

Silvio O. Conte National Fish and Wildlife Refuge

A. Migratory Game Bird Hunting. We allow hunting of duck, goose, common snipe, and American woodcock on the Pondicherry Division of the refuge in accordance with State regulations subject to the following conditions:

* * * * *

C. Big Game Hunting. * * *

* * * * *

5. Conditions A4 and A5 apply.

* * * * *

■ 19. Amend §32.49 New Jersey by revising the introductory text of paragraph C., revising paragraphs C.1. and C.2., and removing paragraphs C.3. through C.5. of Supawna Meadows National Wildlife Refuge to read as follows:

§ 32.49 New Jersey.

* * * * *

Supawna Meadows National Wildlife Refuge

* * * * *

C. Big Game Hunting. We allow hunting of white-tailed deer on designated areas of the refuge in accordance with State regulations subject to the following conditions:

1. We allow only bow hunting on the refuge.

2. We require a State permit for the appropriate State Deer Management Zone.

* * * * *

■ 20. Amend §32.50 New Mexico by revising paragraphs A.1., A.4., and A.5., adding paragraphs A.6. and A.7., and revising paragraphs B.2., B.3., C.1., and C.2. of Bitter Lake National Wildlife Refuge to read as follows:

§ 32.50 New Mexico.

* * * * *

Bitter Lake National Wildlife Refuge

A. Migratory Game Bird Hunting. * * *

1. On the North Tract (including Salt Creek Wilderness Area and the portion of the refuge located north of U.S. Highway 70) all hunting must be in accordance with State seasons and regulations. On the Middle Tract (the portion of the refuge located between U.S. Highway 70 and U.S. Highway 380), we restrict hunting to goose, duck, sandhill crane, and American coot (no dove):

i. In the designated public hunting area;

ii. In the southern portion of the Tract that never approaches closer than 100 yards (90 m) to the public auto tour route;

iii. In the southern portion of the Tract only, we limit hunting to Tuesdays, Thursdays, and Saturdays during the period when the State seasons for that area are open simultaneously for most of these species;

iv. All hunting must cease at 1 p.m. (local time) on each hunt day; and

v. On the South Tract (the portion of the refuge located south of U.S. Highway 380), we allow hunting only during Special hunts (youth hunters age 17 and younger and/or physically impaired) as per State seasons and regulations.

* * * * *

4. Hunters must directly attend all personal property at all times (see §27.93 of this chapter).

5. We allow unleashed hunting/retrieving dogs on the refuge when hunters are legally present in areas where we allow hunters, only if the dogs are under the immediate control of hunters at all times (see §26.21(b) of this chapter), and only to pursue species legally in season at that time.

6. We prohibit hunters and their dogs from entering closed areas for retrieval of game.

7. We do not require refuge or other special hunt permits other than those required by the State (e.g., sandhill crane permits).

B. Upland Game Hunting. * * *

* * * * *

2. Conditions A2 and A4 through A7 apply.

3. We prohibit the use of archery equipment at any time on the refuge except when hunting deer and hogs.

C. Big Game Hunting. * * *

1. We restrict all hunting to the North Tract (including Salt Creek Wilderness Area and the portion of the refuge located north of U.S. highway 70) in accordance with State seasons and

regulations with the specification that we only allow the take of feral hog (no bag limit) while legally hunting deer and only with the weapon legal for taking deer on that day.

2. Conditions A4 and A7 apply.

* * * * *

■ 21. Amend §32.51 New York by:

■ a. Revising paragraphs A., C., and D. of Montezuma National Wildlife Refuge; and

■ b. Revising paragraph C. of Wertheim National Wildlife Refuge to read as follows:

§ 32.51 New York.

* * * * *

Montezuma National Wildlife Refuge

A. Migratory Game Bird Hunting. We allow waterfowl hunting on designated areas of the refuge in accordance with State regulations subject to the following conditions:

1. We require daily refuge permits and reservations. You must possess and carry refuge permits while in the field and present them upon request to any law enforcement officer.

2. We allow hunting only on Tuesdays, Thursdays, and Saturdays during the established refuge season set within the State western zone season.

3. Except for opening day, we take telephone reservations from 8:30 a.m. to 9:00 a.m. on Tuesdays, Thursdays, and Saturdays for the next hunt day.

4. We take opening day reservations between 8:30 a.m. and 9:00 a.m. on a day set by the refuge manager or designee at least 1 week before the season opener.

5. The reservation telephone number is 315-568-4136.

6. All telephone reservations are on a first-come, first-served basis.

7. If you have a reservation for Tschache Pool, you may bring one companion; we will determine party limits for other areas annually.

8. You may request the parking area of your choice when making reservations.

9. Parking signs and blinds should not be moved except by refuge personnel.

10. All hunters with reservations and their hunting companions must check-in at the Route 89 Hunter Creek Station area at least 1 hour before legal shooting time or forfeit their reservation.

11. Hunters must set up in their chosen hunting spot before legal shooting time.

12. Forfeited reservations become available on a first-come, first-served basis to standby hunters at the Route 89 Hunter Check Station.

13. We require a fee of $10 per reservation. If you have a Golden Age or Access Passport, the fee is $5 per reservation.

14. In Tschache Pool, hunters must use motorless boats to hunt, and we limit hunters to one boat per reservation.

15. In Tschache Pool, you must not shoot from the dike or within 50 feet (15 m) of the dike or road, or from within 500 feet (150 m) of the observation tower. We do not limit hunting to specific blind sites.

16. We will announce selection procedures for hunting sites on other areas annually.

17. You may possess a maximum of 15 nontoxic shot shells while in the field (see §32.2(k)).

18. You must stop hunting at 12 p.m. (noon), and you must check out by 1 p.m.

19. We require proof of successful completion of the New York State Waterfowl Identification Course, the Montezuma Nonresident Waterfowl Identification Course, or a suitable nonresident State Waterfowl Identification Course to hunt the refuge; all hunters must show proof each time they hunt.

* * * * *

C. Big Game Hunting. We allow hunting of white-tailed deer on designated areas of the refuge in accordance with State regulations subject to the following conditions:

1. We allow hunting of white-tailed deer only on designated areas of the refuge using archery, firearms (see §27.42 of this chapter), or muzzleloaders during established refuge seasons set within the general State white-tailed deer season.

2. We prohibit hunting on Sunday.

3. You must possess, carry, and present upon request to any law enforcement officer a valid daily hunt permit card. We will also require you to return the daily hunt permit card at the end of hunting or at the end of the day.

4. Daily hunt permits are available at the Route 89 Hunter Check Station on a first-come, first-served basis, issued by refuge personnel or available on a self-service basis; hunters must come to the Route 89 Hunter Check Station to obtain a permit each day they hunt.

5. We issue a maximum of 300 archery and 150 firearms hunt permit cards each day on a first-come, first-served basis.

6. Hunters must fill out Part A of the daily hunt permit card at check-in and leave it with refuge personnel or deposit it in the Part A box at the Route 89 Hunter Check Station.

7. Hunters must carry Part B of the daily hunt permit card while hunting the refuge.

8. Hunters must complete Part B and deposit it in the Part B box at the Route 89 Hunter Check Station by the end of the hunt day.

9. Successful hunters must bring their deer to the Route 89 Hunter Check Station on days designated by the refuge manager.

10. Firearms hunters must wear in a visible manner on the head, chest, and back a minimum of 400 square inches (2,600 cm^2) of solid, blaze orange.

11. We only allow shotguns, muzzleloaders, and bows during the firearms season (see §27.42 of this chapter); successful harvest with a bow during firearms season requires use of a firearms season tag.

12. You must disassemble, lock, or case all bows after legal sunset and before legal sunrise.

13. We prohibit advance scouting of the refuge prior to hunting season.

14. We prohibit boats and canoes on refuge pools and hunting on the open-water portions of the refuge pools.

15. We prohibit ATVs (see §27.31(f) of this chapter).

16. Hunters may only use portable tree stands and must remove them (see §27.93 of this chapter) from the refuge each day.

17. We prohibit screw-in tree steps, nails, and any object used to puncture the bark of a tree; we do allow climbing tree stands that grip the tree (see §32.2(i)).

18. We allow firearms hunters to be on the refuge during the period that begins 1 hour before legal sunrise and ends 1 hour after legal sunset.

19. We allow archery hunters to be on the refuge during the period that begins 1 hour before legal sunrise (except for opening day) and ends 1 hour after legal sunset.

20. On opening day of both archery and firearms seasons, we allow hunters on the refuge during the period that begins 2 hours before legal sunrise and ends 1 hour after legal sunset.

21. We prohibit parking along the Wildlife Drive unless otherwise posted by refuge personnel.

D. Sport Fishing. Anglers may access the New York State Barge Canal System Waters at only two sites on the refuge: The Seneca River Fishing Access Site and the May's Point Fishing Area. You may either bank fish or boat fish in accordance with State regulations.

* * * * *

Wertheim National Wildlife Refuge

* * * * *

C. Big Game Hunting. We allow hunting of white-tailed deer within designated areas of the refuge in

accordance with State regulations subject to the following conditions:

1. We allow archery and shotgun hunting of white-tailed deer within portions of the refuge during specific days between October 1 and January 31.

2. We require refuge permits. We limit the number of deer hunters permitted to hunt on the refuge. We will issue permits by random selection.

3. You must take the specified number of antlerless deer as noted in the refuge hunting regulations before taking an antlered deer.

4. You must have all applicable and valid hunting licenses, permits, stamps, and a photographic identification in your possession while hunting on the refuge.

5. You must limit driving to designated access roads and park only in designated areas. We prohibit use of motorized vehicles on the refuge to retrieve white-tailed deer.

6. You must display refuge parking permits face up on the vehicle dashboard while hunting.

7. We allow hunters to enter the refuge 1 hour before legal hunting hours, and they must leave the refuge no later than 1 hour after legal hunting hours.

8. We prohibit the use of dogs to hunt or pursue game. We prohibit driving deer by any means.

9. We prohibit shooting directly into the 500-foot (150-m) ''No Hunt Buffer.''

10. We prohibit the killing or crippling of any deer without the hunter making reasonable effort to retrieve the deer and retain it in his or her custody.

11. If assigned to Unit 5, hunters must hunt from portable tree stands and must direct aim away from public roads and private dwellings.

12. We allow only shotgun shells loaded with slugs during the firearms season.

13. Hunters must wear a minimum of 400 square inches (2,600 cm^2) of solid-orange clothing, visible on head, chest, and back during the firearms season. Camouflage orange does not qualify because it is not solid.

14. We prohibit construction or use of any type of structure while hunting. We prohibit driving nails, spikes, screws, or other metal objects into any tree or hunting from any tree into which a nail, spike, screw, or other object has been driven (see §32.2(i)).

15. We allow use of temporary or portable tree stands while hunting deer. You must clearly print your name and address on the stand. You must remove all stands or any blinds at the end of each hunt session (see §27.93 of this chapter).

16. You must report all serious accidents and injuries to refuge personnel as soon as possible and before leaving the refuge.

17. Failure to comply with Federal, State, or refuge regulations may lead to dismissal from the refuge and elimination of participation in future hunts.

18. Hunters must abide by all rules and regulations listed on the hunting permit.

19. We prohibit the use of any bait, salt, or enticement (see §32.2(h)).

20. A nonhunting adult possessing a valid New York State hunting license must accompany junior hunters (ages 14 and 15).

21. We prohibit the marking of any tree, trail, or other refuge feature with flagging, paint, reflective material, or any other substance.

22. You must use a safety harness and belt while hunting from a tree stand.

23. We allow scouting of hunting areas on the refuge only during designated times and days. We allow only permitted hunters to scout. We prohibit the use of dogs during scouting.

24. We prohibit the use of electronic calls during any hunting season.

25. We prohibit the trimming or cutting of branches larger than the diameter of a quarter.

* * * * *

■ 22. Amend §32.53 North Dakota by:

■ a. Revising paragraphs B. and C. of Lostwood National Wildlife Refuge; and

■ b. Revising paragraph D.3. and adding paragraph D.14. of Upper Souris National Wildlife Refuge to read as follows:

§ 32.53 North Dakota.

* * * * *

Lostwood National Wildlife Refuge

* * * * *

B. Upland Game Hunting. We allow hunting of sharp-tailed grouse and grey partridge on designated areas of the refuge in accordance with State regulations subject to the following conditions:

1. We prohibit hunting on the portion of the refuge south of Highway 50 during the State gun season.

2. We allow hunting only on the portion of the refuge north of Highway 50 beginning the day following the close of the State deer gun season through the end of the State season.

3. You may possess only approved nontoxic shot while in the field (see §32.2(k)).

4. We prohibit the use of horses during all hunting seasons.

C. Big Game Hunting. We allow hunting of deer on designated areas of the refuge in accordance with State regulations subject to the following conditions:

1. The refuge gun, muzzleloader, and bow deer hunting seasons open and close according to State regulations.

2. We prohibit entry to the refuge before 12 p.m. (noon) on the first day of the archery, gun, or muzzleloader deer hunting season.

3. We will allow only preseason scouting in public use areas and hiking trails.

4. We allow only portable tree stands. You must remove all tree stands at the end of each day (see §§27.93 and 27.94 of this chapter).

5. Hunters may enter the refuge only on foot.

6. Condition B4 applies.

* * * * *

Upper Souris National Wildlife Refuge

* * * * *

D. Sport Fishing. * * *

* * * * *

3. We prohibit the use of bow, spear, or underwater spearing equipment to take fish during open-water periods.

* * * * *

14. We allow dark-house spear fishing from December 1 through the last day of February of each fishing year in conjunction with North Dakota Game and Fish Department regulations.

* * * * *

■ 23. Amend §32.55 Oklahoma by revising paragraph A.1., adding paragraph A.9., revising paragraph B.1., and adding paragraph C.4. of Sequoyah National Wildlife Refuge to read as follows:

§ 32.55 Oklahoma.

* * * * *

Sequoyah National Wildlife Refuge

A. Migratory Game Bird Hunting. * * *

1. We require an annual refuge permit for all hunting. The hunter must possess and carry the signed permit while hunting. We require hunters to abide by all terms and conditions listed on the permit (see §26.43 of this chapter).

* * * * *

9. We prohibit hunters from using refuge boat ramps to access hunting areas outside the refuge boundary on days when we close the refuge for hunting certain species or for any species not hunted on the refuge.

B. Upland Game Hunting. * * *

1. Conditions A1 and A7 through A9 apply.

* * * * *

C. Big Game Hunting. * * *

* * * * *

4. Condition A9 applies.

* * * * *

■ 24. Amend §32.60 South Carolina by:
■ a. Revising Cape Romain National Wildlife Refuge;
■ b. Revising Santee National Wildlife Refuge; and
■ c. Revising paragraphs C.3., C.5, and C.6. of Savannah National Wildlife Refuge to read as follows:

§ 32.60 South Carolina.

* * * * *

Cape Romain National Wildlife Refuge

A. Migratory Game Bird Hunting. We allow hunting of marsh hen/rail only on designated areas of the refuge in accordance with State regulations subject to the following conditions:

1. We require each hunter to carry at all times while hunting a signed, current refuge hunt permit and a government-issued picture ID. The hunt permit is invalid until signed by the hunter.
2. We prohibit hunting on Sundays.
3. You may possess only approved nontoxic shot while hunting on the refuge (see §32.2(k)).
4. We prohibit discharge of weapons for any purpose other than to take or attempt to take legal game during the established hunting season.
5. Each hunter under age 16 must remain within sight and normal voice contact of an adult age 21 or older. Youth hunters must have successfully completed a State-approved hunter education course.
6. We allow use of retrieving dogs only while hunting in designated hunting areas for marsh hen/rail. Otherwise we prohibit dogs on the refuge.
7. We prohibit taking or attempting to take any wildlife from an area unless that area is officially opened for hunting/fishing.

B. Upland Game Hunting. We allow hunting of raccoon on designated areas of the refuge in accordance with State regulations subject to the following conditions:

1. Conditions A1, A2, A4, A5, and A7 apply.
2. We allow hunting only on days designated annually by the refuge within the State season.
3. Hunters must enter and exit through the designated camping area to access any hunting areas on the refuge.
4. We prohibit crossbows, muzzleloaders, shotguns, rifles, pistols, and any other firearms or illegal means designated by the State to take while-tailed deer during the designated refuge archery hunt.
5. The refuge designates daily limits for raccoon.
6. For all raccoons harvested, hunters must check-in the raccoon tail at the refuge check station.
7. We prohibit hunting within 100 feet (30 m) of the Walking Trail (interpretive foot trail) and Beach Road.
8. Each archery hunter must check-in at the camping site on Bulls Island before setting up camp or before starting to hunt. We require each hunter to record his or her name and address in the available register.
9. Hunters may camp in the designated camping areas on Bulls Island during the archery white-tailed deer hunts from 9 a.m. on the day preceding the hunt until 12 p.m. (noon) on the day following the hunt.
10. We restrict hunters to the camping area from 7 p.m. until 4:30 a.m.
11. We prohibit camping on the refuge except for designated archery hunters on Bulls Island and individuals obtaining a special use permit from the refuge manager.
12. We prohibit fires except designated campfires in designated areas during the archery hunt (see §27.95(a) of this chapter).
13. Except for boat motors being operated in salt water, we prohibit motorized equipment on the refuge islands or in refuge inholdings.
14. We prohibit private boats in the refuge boat basins at Garris Landing and Bulls Island. We clearly mark these areas with Closed Area signs.
15. We prohibit overnight parking at Garris Landing except for archery hunters during the designated refuge archery white-tailed deer season and individuals obtaining a special use permit from the refuge manager.
16. Hunters must hunt from a tree stand or the ground. We prohibit stalking, driving, corralling, or any other cooperative form of hunting.

C. Big Game Hunting. We allow the hunting of white-tailed deer on designated areas of the refuge in accordance with State regulations subject to the following conditions:

1. Conditions A1, A2, A4, A5, A7, B2 through B4, and B7 through B16 apply.
2. The refuge designates daily limits for white-tailed deer.
3. Hunters much check all white-tailed deer at the refuge check station prior to removal from Bulls Island.

D. Sport Fishing. We allow the possession, taking, and transportation of: fish, crabs, shellfish, shrimp, and other saltwater species on designated areas of the refuge in accordance with State regulations subject to the following conditions:

1. Conditions A7 and B10 through B14 apply.
2. We prohibit fishing inside the refuge boat basins at Garris Landing and Bulls Island.
3. We prohibit cast nets on the pier at Garris Landing.
4. We prohibit fishing, crabbing, shell fishing, and the taking of other saltwater species on Bulls Island ponds and managed wetlands (Jacks Creek, Lower and Upper Summerhouse Ponds).
5. We close Marsh Island, White Banks, and Sandy Point to public entry from February 15 through September 15 to protect nesting birds. This closed area extends from the low mean water mark to the highest elevation on these islands.
6. We prohibit entering into any area ''Closed to Public Entry'' due to turtle/bird nesting areas.
7. All refuge islands are ''Closed to Public Entry'' or occupancy from 1 hour after legal sunset to 1 hour before legal sunrise, except during a scheduled refuge big game hunt.
8. We prohibit anglers or visitors taking, possessing, or transporting more than one 3-quart plastic bag of sea shells per person per day from the refuge.
9. We prohibit anglers or visitors taking, possessing, or transporting any sea shells containing living organisms from the refuge, except those shellfish allowed by the State according to a recreational or commercial saltwater fishing license and permit.
10. We prohibit the taking of sea shells from the refuge for commercial purposes or monetary gain.
11. We prohibit the commercial transport of passengers to any refuge island for any purpose without a Special Use Permit from the refuge manager.
12. We prohibit feeding or harassing porpoises in any manner.
13. We prohibit mooring or anchoring of boats more than 72 hours within the refuge boundary.

* * * * *

Santee National Wildlife Refuge

A. Migratory Game Bird Hunting. We allow hunting of mourning dove on designated areas of the Cuddo Unit of the refuge in accordance with State regulations subject to the following conditions:

1. All hunters must possess and carry a signed refuge hunting permit and a government-issued picture ID. The hunt permit is invalid until signed by the hunter.
2. We require all hunters to sign in and out at the check station located at the Cuddo entrance gate and report all game taken.
3. We prohibit discharge of weapons (see §27.42 of this chapter) within, into, or across a ''No Hunting Zone'' or ''Closed Area.'' We prohibit entering or crossing a ''No Hunting Zone'' or ''Closed Area'' to access areas open to hunting. We require consent from refuge personnel to enter a ''No Hunting Zone'' or ''Closed Area'' for the purpose of

tracking and/or retrieving legally taken game animals.

4. Each youth hunter (age 16 or younger) must remain within sight and normal voice contact and under the direct supervision of an adult age 21 or older with a valid license and applicable permit. Each adult may supervise no more than two youth hunters. Each youth hunter must possess and carry evidence of successful completion of a State-approved hunter education course.

5. Legal shooting hours for designated refuge dove hunts are in accordance with State law and the times the refuge is open for general public access.

6. We allow scouting for dove 1 week prior to the designated refuge hunting season. Anyone scouting may be on the refuge only during the times the refuge is open for general public access.

7. You may possess only approved nontoxic shot (see §32.2(k) while in the field if hunting with a shotgun or muzzleloader using shot as a delivery device to take mourning doves.

8. Hunters must possess shotguns with shot no larger than No. 5.

9. We allow use of dogs for the retrieving of mourning doves while hunting. The dog must wear a collar displaying the owner's name, address, and phone number.

10. We prohibit discharge of weapons for any purpose other than to take or attempt to take legal game animals during established hunting seasons.

11. We prohibit entering any area posted as ''Closed'' or ''No Hunting Zone.'' We prohibit hunting any species not listed in the introductory paragraphs A, B, or C on any unit.

B. Upland Game Hunting. We allow hunting of raccoon and opossum on designated areas of the refuge in accordance with State regulations subject to the following conditions:

1. Conditions A1 through A4, A10, and A11 apply.

2. We allow hunting only on areas, days, and times designated annually by the refuge within the State season.

3. We require dogs for hunting raccoon and opossum. All dogs must wear a collar displaying the owner's name, address, and phone number.

4. You may possess only approved nontoxic shot (see §32.2(k)) while in the field if hunting with a shotgun using shot as a delivery device to take game.

5. We prohibit crossbows.

C. Big Game Hunting. We allow hunting of white-tailed deer on designated areas of the refuge in accordance with State regulations subject to the following conditions:

1. Conditions A1 through A4, A10, and A11 apply.

2. We allow hunting for white-tailed deer only as described in the refuge hunt brochure.

D. Sport Fishing. We allow fishing on the refuge in accordance with State regulations subject to the following conditions:

1. We allow fishing year-round, 24 hours a day, except in areas posted as ''Closed Areas'' or in areas seasonally closed for migratory bird management in Cantey Bay, Black Bottom, Savannah Branch, and refuge ponds and impoundments.

2. We allow fishing only in Cantey Bay, Black Bottom, Savannah Branch, and refuge ponds and impoundments from March 1 through October 31.

3. We prohibit fishing or boating within 100 feet (30 m) of any nesting birds or bird rookeries within the refuge boundaries.

4. We allow fishing on the inland ponds only during the times the refuge units are open for general public access or as posted.

5. You must possess and carry a signed refuge fishing permit at all times while fishing on the refuge.

6. We prohibit the use of air-thrust boats, hovercraft, airboats, and personal watercraft.

Savannah National Wildlife Refuge

* * * * *

C. Big Game Hunting. * * *

* * * * *

3. We authorize bows only for deer/hog hunting during the archery hunt. We prohibit crossbows (see §27.43 of this chapter).

* * * * *

5. You may take five deer, no more than three antlerless and two antlered. There is no bag limit on feral hogs.

6. You must remove hunt stands daily (see §27.93 of this chapter).

* * * * *

■ 25. Amend §32.62 Tennessee by:

■ a. Revising paragraphs A.1., B.1., removing paragraph B.2. and redesignating paragraphs B.3. through B.9. as paragraphs B.2. through B.8., and revising paragraph D.1. of Cross Creeks National Wildlife Refuge; and

■ b. Revising paragraph A.1., adding paragraph A.12., and revising paragraphs B.1., C.2., and D.4. of Tennessee National Wildlife Refuge to read as follows:

§ 32.62 Tennessee.

* * * * *

Cross Creeks National Wildlife Refuge

A. Migratory Game Bird Hunting. * * *

1. The refuge is open daily from ½ hour before legal sunrise to ½ hour after legal sunset, with the exception of legal hunting and/or fishing activities.

* * * * *

B. Upland Game Hunting. * * *

1. Conditions A1 and A2 apply.

* * * * *

D. Sport Fishing. * * *

1. We allow fishing on refuge pools and reservoirs from March 16 through November 14 from ½ hour before legal sunrise to ½ hour after legal sunset.

* * * * *

Tennessee National Wildlife Refuge

A. Migratory Game Bird Hunting. * * *

1. The refuge is open daily from ½ hour before legal sunrise to ½ hour after legal sunset, with the exception of legal hunting/fishing activities.

* * * * *

12. We restrict the Duck River Bottoms unit to a quota goose hunt only. You may only participate in the quota hunt with a special quota permit issued through random drawing. Information for permit application is available at the refuge headquarters.

B. Upland Game Hunting. * * *

1. Condition A1 applies.

* * * * *

C. Big Game Hunting. * * *

* * * * *

2. You may only participate in the refuge quota deer hunts with a special quota permit issued through random drawing. Information for permit applications is available at the refuge headquarters. You must possess and carry a valid refuge permit while hunting on the refuge.

D. Sport Fishing. * * *

* * * * *

4. We allow fishing on interior refuge impoundments from ½ hour before legal sunrise to ½ hour after legal sunset.

* * * * *

■ 26. Amend §32.63 Texas by:

■ a. Revising paragraphs C.6. and C.7. of Aransas National Wildlife Refuge;

■ b. Revising the introductory text of paragraph A., revising paragraphs A.1., A.4., and A.6., revising the introductory text of paragraph B., revising paragraphs B.1., B.6., and B.8., and adding paragraphs B.9. and B.10. of Balcones Canyonlands National Wildlife Refuge;

■ c. Redesignating paragraphs A.1. through A.5. as paragraphs A.2. through A.6. and adding a new paragraph A.1. of Brazoria National Wildlife Refuge; and

■ d. Revising paragraph A.3. of San Bernard National Wildlife Refuge to read as follows:

§ 32.63 Texas.

* * * * *

Aransas National Wildlife Refuge

* * * * *

C. Big Game Hunting. * * *

* * * * *

6. We allow archery hunting within the deer season for the county on specified days listed in the refuge hunt brochure.

7. We allow firearm hunting within the deer season for the county on specified days listed in the refuge hunt brochure.

* * * * *

Balcones Canyonlands National Wildlife Refuge

A. Migratory Game Bird Hunting. We allow hunting of mourning, white-wing, rock, and Eurasian-collared doves on designated areas of the refuge in accordance with State regulations subject to the following conditions:

1. We allow hunting on the refuge during limited periods of the State-designated hunting season. We publish these dates in the annual refuge hunting brochure.

* * * * *

4. We require all hunters to obtain and possess a refuge permit and pay a hunt fee.

* * * * *

6. All hunters must be age 12 or older. An adult age 21 or older must supervise hunters ages 12-17 (inclusive).

* * * * *

B. Upland Game Hunting. We allow hunting of turkey on designated areas of the refuge in accordance with State regulations subject to the following conditions:

1. Conditions A1, A3, A4, A7, and A8 apply.

* * * * *

6. We annually establish bag limits for turkey and publish these bag limits in the annual hunt brochure.

* * * * *

8. We require that hunters check-in all harvested game at the refuge check station on the day of the hunt.

9. We allow use of portable hunting stands. They may be set up during scouting week, but must be removed when a hunter's permit expires (see §27.93 of this chapter). We prohibit hunters from driving nails, spikes, or other objects into trees or hunting from stands secured with objects driven into trees (see §27.61 of this chapter).

10. We prohibit hunting within 50 yards (45 m) of adjoining private property lines or from a road open to vehicular traffic and/or within 200 yards (180 m) of a building.

* * * * *

Brazoria National Wildlife Refuge

A. Migratory Game Bird Hunting. * * *

1. We require permits and payment of fees for the Otter Slough Permit Waterfowl Hunt. Hunters must abide by all terms and conditions set forth by the permit.

* * * * *

San Bernard National Wildlife Refuge

A. Migratory Game Bird Hunting. * * *

* * * * *

3. We require permits and payment of fees for the Sargent Permit Waterfowl Hunt and Light Goose Conservation Order Season Permit Hunt Area. Hunters must abide by all terms and conditions set by the permits.

* * * * *

■ 27. Amend §32.66 Virginia by:

■ a. Revising paragraphs C. and D.1., D.5., D.6., D.7.iv., and D.7.v. of Back Bay National Wildlife Refuge;

■ b. Revising paragraph C.1.i. of Chincoteague National Wildlife Refuge;

■ c. Revising the introductory text of paragraph C., paragraphs C.1. through C.5., and C.8. through C.11. of Great Dismal Swamp National Wildlife Refuge;

■ d. Revising paragraph C. of James River National Wildlife Refuge;

■ e. Revising paragraph A. of Plum Tree Island National Wildlife Refuge;

■ f. Revising paragraph C. of Presquile National Wildlife Refuge; and

■ g. Revising paragraph C. and D. of Rappahannock River Valley National Wildlife Refuge to read as follows:

§ 32.66 Virginia.

* * * * *

Back Bay National Wildlife Refuge

* * * * *

C. Big Game Hunting. We allow hunting of white-tailed deer and feral hogs on designated areas of the refuge in accordance with State regulations subject to the following conditions:

1. The State determines hunting seasons annually, usually beginning October 1 and ending in early January. We conduct the deer and hog hunt on the barrier spit of the refuge for a minimum of 7 days in October. We will close the refuge for all other public uses on those days.

2. Hunters must present their Hunter Safety Education Certification and required licenses at check-in.

3. Hunters must register on each hunt day. We will issue a Special Use Hunting Permit, which hunters must sign and carry on their person while hunting.

4. The hunt lottery system (run through a contractor) may be accessed through Back Bay National Wildlife Refuge, Virginia Department of Conservation & Recreation, and The Virginia Game and Inland Fisheries website. Selected hunters will receive a ''Successful Hunter Selection Packet'' from the contractor by mail.

5. All selected and standby applicants must enter the refuge between 4 a.m. and 5 a.m. on each hunt day. We may issue standby hunters permits to fill vacant slots by lottery. All hunters must check out at the Check Station no later than 6 p.m.

6. Hunters must sign in and out on each hunt day.

7. We prohibit use of dogs.

8. We prohibit possession of alcoholic beverages (see §32.2(j)).

9. You must be at least age 18 to hunt without an accompanying, qualified adult. Youths between ages 12 and 18 may hunt only when accompanied by a licensed hunter who is age 21 or older.

10. Each hunter must visibly wear a minimum of 400 square inches (2,600 cm^2) of solid-colored, blaze-orange material on his or her head, chest, and back. This is the equivalent of a hat and vest for each hunter.

11. Hunting Zone 5 is for use by nonambulatory hunters. A nonambulatory hunter is someone who can provide medical documentation from a doctor that he or she is unable to walk.

12. We allow scouting one week prior to the first day of the refuge hunt. Hunters may enter the hunt zones by foot or bicycle only. Scouts must wear 400 square inches (2,600 cm^2) of visible blaze orange. We require hunters to sign in and out on each day of scouting.

13. Hunters may go to Hunt Zone 1 (Long Island) only by hand-launched watercraft (canoe, punt, rowboat, etc.) from the canoe launch at refuge headquarters. Your boat must meet Coast Guard safety requirements. We prohibit use of boats on trailers.

14. A Safety Zone runs from the Check Station to north of the headquarters parking lot. We prohibit hunting or discharging of firearms within the Safety Zone. We prohibit retrieval of crippled game from a ''No Hunting Area'' or ''Safety Zone'' without the consent of the refuge employee on duty at the Check Station.

15. We prohibit use of tree stands.

16. We prohibit use of the ''Hacking Tower'' in Hunt Zone 4.

D. Sport Fishing. * * *

1. We close all areas within the hunting zones, as well as the oceanfront, to fishing, crabbing, and clamming during the annual refuge white-tailed deer and feral hog hunt.

* * * * *

5. Anglers may access the refuge for sport fishing, crabbing, and clamming from the refuge headquarters parking lot only by foot, bicycle, and nontrailered boats.

6. Anglers may surf fish, crab, and clam south of the refuge's beach access ramp.

7. * * *

iv. Anglers must catch and release smallmouth bass, largemouth bass, and pickerel. The daily creel limit for D Pool for other species is a maximum combination of any 10 fish.

v. Parking for nonambulatory visitors is available adjacent to the dock at D Pool. All other visitors must hike in or bicycle in.

Chincoteague National Wildlife Refuge

* * * * *

C. Big Game Hunting. * * *

1. General hunt information:

i. You must possess and carry a refuge permit. Hunting brochures containing hunting application procedures, seasons, bag limits, methods of hunting, maps depicting areas open to hunting, and the terms and conditions under which we issue hunting permits are available from the refuge administration office.

* * * * *

Great Dismal Swamp National Wildlife Refuge

* * * * *

C. Big Game Hunting. We allow hunting of white-tailed deer and bear on designated areas of the refuge in accordance with State regulations subject to the following conditions:

1. You must possess and carry a refuge permit and compass.

2. We allow shotguns, 20 gauge or larger, loaded with buckshot or rifled slugs, and bows and arrows, and crossbows. For the bear hunt in Virginia, we allow only shotguns, 20 gauge or larger, with slugs.

3. We prohibit dogs.

4. You must wear 400 square inches (2,600 cm^2) of solid-colored, hunter-orange clothing or material in a visible manner during firearms big game season.

5. You must sign in and out each time you enter and leave the refuge.

* * * * *

8. We prohibit shooting from, onto, or across refuge roads, including roads closed to vehicles.

9. You must check-in all harvested bears at the refuge official check station.

10. We prohibit baiting or hunting over bait (see §32.2(h)).

11. We prohibit possession of alcoholic beverages (see §32.2(j)).

* * * * *

James River National Wildlife Refuge

* * * * *

C. Big Game Hunting. We allow hunting of white-tailed deer on designated areas of the refuge in accordance with State regulations subject to the following conditions:

1. We require firearm hunters to purchase a refuge hunt permit at the Refuge Hunter Check Station on the morning of each hunt on a first-come, first-served basis. The permit must be in the possession of the hunter while on refuge property.

2. We require archery hunters to purchase a refuge hunt permit by mail, by the designated application deadline. Archery hunters must contact the Charles City Office at (804) 829-9020 to apply for a permit. You must possess the permit while on refuge property.

3. You must follow all conditions of the hunting permit.

4. We allow the use of shotguns (20-gauge or larger, loaded with buckshot only), muzzleloaders, archery, and crossbows on designated refuge hunt days.

5. We allow the take of two deer of either sex per day.

6. We prohibit dogs.

7. We allow only portable tree stands that hunters must remove at the end of each hunt day.

8. During firearm seasons, hunters must wear in a visible manner on head, chest, and back a minimum of 400 square inches (2,600 cm^2) of solid-colored, hunter-orange clothing or material.

9. During archery-only season, hunters must wear in a visible manner a solid-colored, hunter-orange hat or cap while moving to and from their stand.

10. We require that firearm hunters remain within 25 feet (7.5 m) of their assigned stand unless tracking or retrieving a wounded deer.

11. Hunters may retrieve wounded deer from closed areas with prior consent from a refuge employee.

12. We prohibit the discharge of firearm or archery equipment across or within refuge roads, including roads closed to vehicles.

13. You must be at least age 18 to hunt without an accompanying, qualified adult. Youth hunters between ages 12 and 17 may hunt only when accompanied by an adult age 21 or older who must also possess and carry a valid hunting license. The minimum age for hunters is 12.

* * * * *

Plum Tree Island National Wildlife Refuge

A. Migratory Game Bird Hunting. We allow hunting of waterfowl, gallinule, and coot on designated areas of the refuge in accordance with State regulations subject to the following conditions:

1. You must possess and carry a signed Special Use Hunting Permit while hunting migratory game birds on the refuge. We open only the Cow Island area of the refuge to migratory game bird hunting. We close all other areas of the refuge to all public entry. You may obtain permit application information by contacting the Charles City Office at (804) 829-9020.

2. We will determine hunting locations, dates, and times by lottery. We will designate them on hunting permits.

3. We prohibit jump-shooting by foot or boat. We allow hunting from a blind only as determined by hunting permit.

4. You must follow all conditions of your hunt permit.

5. We prohibit any activity that disturbs the bottom, including landing boats, anchoring, driving posts, etc., within the refuge boundary and within the U.S. Army Corps of Engineers-designated Danger Zone around Plum Tree Island.

* * * * *

Presquile National Wildlife Refuge

* * * * *

C. Big Game Hunting. We allow hunting of white-tailed deer on designated areas of the refuge in accordance with State regulations subject to the following conditions:

1. We require you to purchase a refuge hunt permit. You may obtain permit information by contacting the Charles City Office at (804) 829-9020. You must possess the permit while on refuge property.

2. You must follow all conditions of the hunting permit.

3. We allow the use of shotguns (20-gauge or larger, loaded with buckshot or rifled slugs).

4. We allow the take of two deer of either sex per day.

5. We prohibit dogs.

6. We allow only portable tree stands that hunters must remove at the end of each hunt day.

7. We require hunters to wear in a conspicuous manner on head, chest, and back a minimum of 400 square inches (2,600 cm^2) of solid-colored, hunter-orange clothing or material.

8. You must be at least age 18 to hunt without an accompanying, qualified adult. Youth hunters between ages 12 and 17 may hunt only when accompanied by an adult age 21 or older who must also possess and carry a valid hunting license. The minimum age for hunters is 12.

* * * * *

Rappahannock River Valley National Wildlife Refuge

* * * * *

C. Big Game Hunting. We allow hunting of white-tailed deer on designated areas of the refuge in accordance with State regulations subject to the following conditions:

1. We require hunters to purchase a refuge hunt permit. You may obtain permit application information by contacting Refuge Headquarters at (804) 333-1470. You must possess the permit while on refuge property.

2. You must follow all conditions of the hunting permit.

3. We allow shotgun, muzzleloader, and archery hunting on designated refuge hunt days.

4. We allow the take of two deer per day. We will determine the sex of the deer on the hunting permit.

5. We prohibit dogs.

6. We allow only portable tree stands that hunters must remove at the end of each hunt day.

7. We require firearm hunters to wear in a conspicuous manner on head, chest, and back a minimum of 400 square inches (2,600 cm^2) of solid-colored, hunter-orange clothing or material.

8. During archery-only season, hunters must wear in a visible manner a solid-colored, hunter-orange hat or cap while moving to and from their stand.

9. We prohibit the discharge of firearm or archery equipment across or within refuge roads, including roads closed to vehicles.

10. Hunters may retrieve wounded deer from closed areas only with prior consent from a refuge employee.

11. You must be at least age 18 to hunt without an accompanying, qualified adult. Youth hunters between ages 12 and 17 may hunt only when accompanied by an adult age 21 or older who must also possess and carry a valid hunting license. The minimum age for hunters is 12.

D. Sport Fishing. We allow fishing on designated areas of Wilna Pond in Richmond County in accordance with State regulations subject to the following conditions:

1. We allow fishing access from legal sunrise to legal sunset.

2. We allow fishing from the Wilna Pond pier, banks of the dam, and watercraft. We prohibit fishing from the aluminum catwalk.

3. All Virginia boating laws apply on Wilna Pond, including personal flotation device (PFD) requirements and State motor boat registration for vessels under power.

4. During the period when we open the Wilna Tract for deer hunting, we will close it to all other uses, including fishing.

5. We prohibit fishing by any means other than by use of one or more attended poles with hook and line attached.

6. We prohibit the use of lead sinkers.

7. We require catch and release fishing only for largemouth bass. You may take other finfish species in accordance with State regulations.

8. We prohibit the take of any reptile, amphibian, or invertebrate species for use as bait or for any other purpose.

9. We prohibit the use of live minnows as bait.

10. We prohibit the use of boats propelled by gasoline motors, sail, or mechanically operated paddle wheel. We allow only car-top boats, and we prohibit trailers.

11. We will give prescheduled environmental education field trips priority over other uses, including sport fishing, on the Wilna Pond pier at all times.

* * * * *

■ 28. Amend §32.67 Washington by adding paragraphs A.3. through A.16. of Ridgefield National Wildlife Refuge to read as follows:

§ 32.67 Washington.

* * * * *

Ridgefield National Wildlife Refuge

A. Migratory Game Bird Hunting. * * *

* * * * *

3. We prohibit hunting of dusky Canada goose. The State defines dusky Canada goose as a dark goose, as determined by a Munsell color chart 10 YR, 5 or less, with a culmen length of 40 to 50 millimeters (1.6 to 2 inches). Hunting of dusky goose will result in invalidation of the refuge hunting permit and loss of refuge hunting privileges for the remainder of the waterfowl hunting season.

4. We allow hunting on designated portions of the River ''S'' Unit on Tuesdays, Thursdays, and Saturdays, excluding Federal holidays, during the regular State waterfowl hunting season.

5. Prior to entering the hunt area, you must pay a recreation user fee, obtain a blind assignment, and obtain a check-out card. You must carry the check-out card while hunting as proof of user fee payment.

6. We allow access to the refuge check station 2 hours before legal shooting time. We require hunters to depart the refuge no later than 1 hour after legal shooting time.

7. We allow entry to the hunt area during hunt days for the purpose of hunting only. We prohibit entry to the hunt area for scouting, sight-seeing, or other purposes.

8. We allow hunting only from designated permanent blinds. We prohibit all hunting outside the designated blinds, including hunting from temporary blinds or jump shooting.

9. We allow a maximum of three persons per hunting blind.

10. We prohibit additional hunters to join a hunt party after the party has checked in.

11. You may possess only approved nontoxic shotshells (see §32.2(k)) in quantities of 25 or less per day.

12. Hunters must leash all dogs except when hunting at the designated blind (see §26.21(b) of this chapter).

13. Hunters must complete an accurate check-out card and submit it to the check station before leaving the refuge.

14. We require all hunters switching blinds to first report to the refuge check station, complete a check-out card for the blind being vacated, and obtain a new check-out card for the new blind.

15. We reserve Blind 1A for exclusive use by hunters with permanent disabilities who possess a valid State Disabled Hunter Permit and who qualify under WAC 232-12-282. Blind 1A may also be occupied by nonhunters who are assisting the disabled hunters.

16. We allow vehicles only on designated routes of travel and require hunters to park in designated parking areas (see §27.31 of this chapter). We prohibit off-road vehicle travel, and all use of ATVs (see §27.31(f) of this chapter).

* * * * *

■ 29. Amend §32.68 West Virginia by revising paragraph A.1., revising the introductory text of paragraph C. and adding paragraph D.4. of Ohio River Islands National Wildlife Refuge to read as follows:

§ 32.68 West Virginia.

* * * * *

Ohio River Islands National Wildlife Refuge

A. Migratory Game Bird Hunting. * * *

1. We require each hunter to possess and carry a refuge hunting permit, State hunting license, and valid driver's license (or other photo identification card) at all times when hunting on the refuge. The refuge hunting permit is free, and you may obtain it at the refuge headquarters.

* * * * *

C. Big Game Hunting. We allow archery hunting of white-tailed deer on designated areas of the refuge (Pennsylvania: Phillis Island, Georgetown Island; West Virginia: Paden Island, Captina Island, Captina Mainland, Fish Creek Island, Williamson Island, Witten Towhead, Wells Island, Mill Creek Island, Grandview Island, Grape/Bat Island, zoned area of Middle Island, Broadback Island, Buckley Island, Buckley Mainland, Muskingum Island, Neal Island, Buffington Island, Letart Island; and Kentucky: Manchester 1 Island, Manchester 2 Island) in accordance with State regulations subject to the following conditions:

* * * * *

D. Sport Fishing. * * *

* * * * *

4. We prohibit trotlines (setlines) and turtle lines.

Dated: August 20, 2009.

Will Shafroth

Acting Assistant Secretary for Fish and Wildlife and Parks

[FR Doc. E9–21027 Filed 9–2– 09; 8:45 am]

4310–55–S

Federal Register

Thursday,
September 3, 2009

Part III

Consumer Product Safety Commission

16 CFR Parts 1215, 1216, and 1500

Safety Standard for Infant Walkers; Revocation of Regulation Banning Certain Baby-Walkers, Walker-Jumpers, and Similar Products; Safety Standard for Infant Bath Seats; Infant Bath Seats: Termination of Rulemaking; Proposed Rules

CONSUMER PRODUCT SAFETY COMMISSION

16 CFR Part 1216

[CPSC Docket No. CPSC–2009–0065]

Safety Standard for Infant Walkers

AGENCY: Consumer Product Safety Commission.

ACTION: Notice of proposed rulemaking.

SUMMARY: Section 104(b) of the Consumer Product Safety Improvement Act of 2008 (''CPSIA'') requires the United States Consumer Product Safety Commission (''CPSC'' or ''Commission'') to promulgate consumer product safety standards for durable infant or toddler products. These standards are to be ''substantially the same as'' applicable voluntary standards or more stringent than the voluntary standard if the Commission concludes that more stringent requirements would further reduce the risk of injury associated with the product. The Commission is proposing a safety standard for infant walkers in response to the direction under section 104(b) of the CPSIA.

DATES: Written comments must be received by November 17, 2009.

ADDRESSES: You may submit comments, identified by Docket No. CPSC–2009–0065, by any of the following methods:

Electronic Submissions

Submit electronic comments in the following way:

Federal eRulemaking Portal: http://www.regulations.gov. Follow the instructions for submitting comments. To ensure timely processing of comments, the Commission is no longer accepting comments submitted by electronic mail (e-mail) except through *http://www.regulations.gov.*

Written Submissions

Submit written submissions in the following way:

Mail/Hand delivery/Courier (for paper, disk, or CD–ROM submissions), preferably in five copies, to: Office of the Secretary, Consumer Product Safety Commission, Room 502, 4330 East West Highway, Bethesda, MD 20814; telephone (301) 504–7923.

Instructions: All submissions received must include the agency name and docket number for this rulemaking. All comments received may be posted without change, including any personal identifiers, contact information, or other personal information provided, to *http://www.regulations.gov.* Do not submit confidential business information, trade secret information, or other sensitive or protected information electronically. Such information should be submitted in writing.

Docket: For access to the docket to read background documents or comments received, go to *http://www.regulations.gov.*

FOR FURTHER INFORMATION CONTACT: Patricia Edwards, Project Manager, Directorate for Engineering Sciences, Consumer Product Safety Commission, 4330 East West Highway, Bethesda, MD 20814; telephone (301) 504–7577; *pedwards@cpsc.gov.*

SUPPLEMENTARY INFORMATION:

A. Background and Statutory Authority

1. The Consumer Product Safety Improvement Act

The Consumer Product Safety Improvement Act of 2008 (''CPSIA'', Pub. L. 110–314) was enacted on August 14, 2008. Section 104(b) of the CPSIA requires the Commission to promulgate consumer product safety standards for durable infant or toddler products. These standards are to be ''substantially the same as'' applicable voluntary standards or more stringent than the voluntary standard if the Commission concludes that more stringent requirements would further reduce the risk of injury associated with the product. Section 104(b)(2) of the CPSIA directs the Commission to begin rulemaking for two standards by August 14, 2009. In this document, the Commission proposes a safety standard for infant walkers. The proposed standard is substantially the same as a voluntary standard developed by the American Society for Testing and Materials, ASTM F 977–07 *Standard Consumer Safety Specification for Infant Walkers,* but with several modifications that strengthen the standard.

2. Existing Mandatory Regulations for Walkers

The Commission currently has regulations for infant walkers, originally issued in 1971 by the Food and Drug Administration, at 16 CFR 1500.18(a)(6) and 16 CFR 1500.86(a)(4). These regulations apply to items known as baby bouncers, walker-jumpers, and baby walkers. The regulations declare as a banned hazardous substance such an item ''which because of its design has any exposed parts capable of causing amputation, crushing, lacerations, fractures, hematomas, bruises, or other injuries to fingers, toes, or other parts of the anatomy of young children.'' 16 CFR 1500.18(a)(6). The regulations set out mechanical, labeling, and recordkeeping requirements with which such items must comply in order to be exempt from the ban. 16 CFR 1500.86(a)(4). These specifically address such hazards as scissoring, shearing or pinching; exposed coil springs in which a child could become caught; holes in plates or tubes; and accidental collapse of the item.

These regulations do not address hazards associated with falls down stairs, structural integrity, occupant retention, or loading/stability issues. The ASTM F 977–07 standard contains provisions that the mandatory regulations lack or requirements that are more stringent than the mandatory standard.

Elsewhere in this issue of the **Federal Register**, the Commission is proposing to revoke the existing CPSC regulations for walkers. As explained in the proposed revocation notice, the existing regulations are based on incomplete and outdated anthropometric data. Revoking the existing regulations will also avoid confusion about what requirements apply to infant walkers. The Commission is concerned, however, that the existing mandatory regulations may cover products not covered by the ASTM F 977–07 standard (or other voluntary standards) and that revocation of the mandatory requirements may leave a gap in regulation. The Commission's proposal to revoke the existing CPSC regulations for walkers invites comments on this issue.

3. Previous Rulemaking Concerning Stair Fall Hazard

In August 1994, the Commission published an advance notice of proposed rulemaking (''ANPR'') in the **Federal Register** (59 FR 39306) initiating a rulemaking proceeding on infant walkers under the Federal Hazardous Substances Act (''FHSA''). The Commission stated at that time that it had reason to believe that walkers presented an unreasonable risk of injury due to the hazard of walkers falling down steps or stairs. After the ANPR was published, CPSC staff worked with ASTM to develop new requirements that could be added to the existing voluntary standard to address the stair-fall hazard. A revised ASTM standard including such provisions was published in early 1997 as ASTM F 977–07. In May 2002, the Commission voted to terminate the FHSA walker rulemaking because it could not make the findings necessary to issue a mandatory rule in light of the revised voluntary standard. 67 FR 31165 (May 9, 2002).

B. The Product

Infant walkers are used to support very young children before they are

walking (usually 6 to 15 months old). ASTM F 977–07 defines ''walker'' as ''a mobile unit that enables a child to move on a horizontal surface when propelled by the child sitting or standing within the walker, and that is in the manufacturer's recommended use position.'' Children may use walkers to sit, recline, bounce, jump, and use their feet to move around. Walkers typically consist of fabric seats attached to rigid trays. The trays are fastened to bases that have wheels or casters to make them mobile.

Currently, there are at least seven manufacturers or importers supplying walkers to the United States market (four domestic manufacturers, two foreign manufacturers with divisions in the United States, and one domestic importer).

All known suppliers of infant walkers are members of the Juvenile Products Manufacturers Association (JPMA), the major United States trade association that represents juvenile product manufacturers and importers. Each supplies a variety of children's products, of which walkers are only a small proportion. Infant walkers are available in many countries besides the United States, including China, the United Kingdom, and Australia. Therefore, any foreign manufacturer is a potential supplier to the United States market, either directly or indirectly through an importer.

Infant walkers made by all of the domestic manufacturers supplying baby walkers to the United States market are JPMA certified as compliant with the current ASTM voluntary standard. Based on limited CPSC staff testing, CPSC staff does not believe that the two foreign manufacturers and the domestic importer are making walkers that are compliant with the current voluntary standard.

Sales of infant walkers peaked in the early 1990s at less than 2 million annually. By 2005, however, annual walker sales had fallen to around 600,000. Following a similar pattern, walkers in use (the number of walkers estimated to still be in use, regardless of when sold) peaked in the mid-1990s, but have since fallen sharply as well (by 55 percent between 1996 and 2005). As of 2005, the estimated number of walkers in use was probably less than 2 million.

C. Incident Data

1. Injury Estimates

There were an estimated total of 14,900 (an annual average of 3,000) infant walker-related injuries among children under the age of 15 months that were treated in hospital emergency departments in the United States over the five-year period 2004–2008.[1] (This estimate has been adjusted to exclude jumpers from the walker code.) No deaths were reported through NEISS. There was no statistically significant increase or decrease observed in the estimated injuries from one year to the next, nor was there any statistically significant trend observed over the 2004–2008 period. For the emergency department-treated injuries related to infant walkers, the following characteristics occurred most frequently based on an annual average:

- Hazard—falls either out of the walker or down stairs/to a lower level while in the walker (62%)
- Injured body part—head (45%) and face (27%)
- Injury type—contusions/abrasions (37%) and internal organ injury (28%)
- Disposition—treated and released (90%) and hospitalized (5%).

For approximately 72 percent of the injuries reported, the walker was directly involved in the incident (such as the walker falling down stairs, tipping over, collapsing). However, many (nearly 20 percent) of the emergency department-treated injuries were not necessarily caused by failures of the walkers.

The stair-fall protection provisions in the ASTM standard have dramatically affected walker-related incidents. From 1994 to 2008 there has been an 88% decrease in estimated walker-related incidents treated in emergency rooms (from 24,000 to 2,800). Nevertheless, the stair fall hazard is the most prevalent hazard in walker-related incidents. Some of these incidents involve non-compliant walkers, damaged or worn walkers, or children who are strong enough to lift the walker and defeat the stair-fall protection.

2. Fatalities

CPSC staff has reports of eight fatal incidents involving an infant in a walker during the five year period 2004 to 2008.[2] One of these appears to involve a stair fall incident. The walker involved did not conform to the ASTM walker standard's stair fall performance requirements and had been under recall at the time of the death (due to the lack of stair fall protection). There were three deaths that resulted from accidental drowning when the child moved in a walker into a residential pool or spa. Two of these three deaths involved walkers that were certified to the JPMA standard, though pictures showed that one of the walkers was missing a wheel. The physical condition of the other walker is unknown. The circumstances of the remaining four deaths varied and involved non-fall related circumstances (*i.e.,* a slow cooker overturned on an infant in a walker who pulled the cord of the cooker, an infant pulled a heavy dining chair on himself, an infant rolled down a driveway and struck a moving vehicle, and an infant aspirated a screw while seated in a walker).

3. Non-Fatal Injuries

A total of 78 non-fatal injuries were reported to have occurred between 2004 and 2008. All of these injuries occurred when the infant was seated in a walker. The leading cause of injury (about 42% of the injuries) was falls down the stairs or to a lower level. The next major cause of injury was product failure, either structural or mechanical failure of the walker, and these accounted for another 37% of the incidents. The attached toys, toy bars, or toy trays on the walker caused another 17% of the injuries, such as lacerations, abrasions, pinching, etc. Three percent of the non-fatal reported injuries were serious burn injuries resulting from infants pulling cords of small cooking appliances and spilling hot liquids onto themselves. Finally, one percent of the reported incidents did not specify the injury.

D. ASTM Voluntary Standard

ASTM F 977 *Standard Consumer Safety Specification for Infant Walkers* was first published in 1986. As mentioned above in part A.3 of the preamble, it was revised in 1997 to address the stair-fall hazard.

JPMA provides certification programs for juvenile products, including walkers. Manufacturers submit their products to an independent test laboratory to test the product for conformance to the ASTM standard. Currently walkers from five manufacturers are JPMA certified as being in compliance with the ASTM standard.

The current ASTM standard includes performance requirements specific to walkers, general performance requirements, and labeling requirements. The key provisions of the current ASTM walker standard include the following:

- Prevention of falls down stairs—intended to ensure that a walker will

[1] The source of injury estimates is the National Electronic Injury Surveillance System (''NEISS''), a statistically valid injury surveillance system based on data gathered from emergency departments of hospitals selected as a probability sample of all the United States hospitals with emergency departments.

[2] The reported fatalities and non-fatalities are neither a complete count of all incidents that occurred during the period nor a sample of known probability of selection.

not fall over when facing front, back, and sideways.

- Tipping resistance—intended to ensure that walkers are stable and do not tip over when on a flat surface; includes tests for forward and rear tip resistance, as well as for the occupant leaning over the front.
- Dynamic and static load testing on seating area—intended to ensure that the child remains fully supported while stationary and while bouncing/jumping.
- Occupant retention—intended to prevent entrapment by setting requirements for leg openings.

The current ASTM standard also includes: (1) Torque and tension tests to assure that components cannot be removed; (2) requirements for several walker features to prevent entrapment and cuts (minimum and maximum opening size, accessible coil springs, leg openings, and edges that can scissor, shear, or pinch); (3) latching/locking mechanism requirements to assure that walkers do not accidentally fold while in use; (4) requirements for the permanency and adhesion of labels; and (5) requirements for instructional literature.

The Commission believes that the ASTM standard's performance tests for evaluating the stability and structural integrity of infant walkers are adequate. However, the Commission believes that changes to the stair fall requirement are needed to better control testing variability and consistency. As discussed below, the Commission also is proposing to add a 30° incline plane test and a parking brake test from the European standard for walkers (EN 1273: 2005), and making editorial text changes to ASTM F 977–07 to clarify several provisions.

E. Assessment of Voluntary Standard ASTM F 977–07

1. Section 104(b) of the CPSIA: Consultation and CPSC Staff Review

Section 104(b) of the CPSIA requires the Commission to assess the effectiveness of the voluntary standard in consultation with representatives of consumer groups, juvenile product manufacturers, and other experts. This consultation process began in October 2008 during the ASTM subcommittee meeting regarding the ASTM infant walker voluntary standard. Consultations between Commission staff and members of this subcommittee have continued and are still ongoing.

To evaluate the ASTM infant walker standard and develop recommendations for changes to it, CPSC staff conducted testing on JPMA-certified walkers. The testing focused on the stair fall test in the current ASTM standard, a stability performance requirement, and a parking brake requirement (the latter two both taken from a European standard on walkers, EN 1273:2005).

2. Current Stair Fall Requirement in ASTM F 977–07

The stair fall requirement is the key provision in the ASTM standard. For this test, a walker with a Civil Aeromedical Institute infant dummy (Mark II) (subsequently referred to as ''CAMI dummy'') is placed in the walker's seat which is propelled with a horizontal dynamic force by means of a pulley, rope, and a falling 8 lb weight on a hardwood floor surface. The walker passes the test if it stays on the hardwood floor table surface. It fails the test if the walker completely falls off the table surface.

The current ASTM standard is based on the assumption that an average walker weighs 8 pounds. However, the average weight of recent model walkers is greater than 8 pounds, the typical weight of earlier models. CPSC staff weighed five 2008 to 2009 model walkers. The weight values ranged from 11 to 14 pounds. Computing the launching distance d as described in section 7.6 of ASTM F 977–07 depends on the weight of the walker, the weight of the CAMI dummy, the weight of the CAMI vest, the coefficient of friction between the walker wheels and the test table surface, and the maximum velocity at the edge of the test table platform (4 ft/sec or 2 ft/sec). According to section 7.6 of ASTM F 977–07, the d value for the forward and rearward directions with only the CAMI dummy seated in the walker is 14.6 inches. The d value for the forward and rearward directions with the CAMI dummy fitted with the 11-pound vest seated in the walker is 21.2 inches. The values of 14.6 inches and 21.2 inches were based on the assumption that the walker weight is 8 pounds.

In the current ASTM standard, most of the hardware and test apparatus components are not specified. Variability in the type and size of the pulley, rope type, test table flexure etc. can lead to different test results. Two different labs could test the same model walker and obtain different results.

CPSC staff participated in various round robin tests and conducted its own tests to evaluate the effects of test apparatus components and test conditions related to the stair fall test requirement. As a result of this testing, the Commission is proposing changes to the current ASTM test procedure to reduce test variability. These proposed changes are discussed in part F of this preamble.

CPSC staff also performed a modified version of the stair fall performance test on the decking of various residential pools to assess if any changes to the ASTM standard were necessary to address the two fatal incidents involving children using JPMA-certified walkers that fell into residential pools. The test results indicated that JPMA-certified walkers passed (*i.e.,* did not fall in the pool) when tested to the same conditions as the ASTM standard (terminal velocity of 4 ft/sec, CAMI dummy fitted with the 11 pound vest seated in the walker). CPSC staff did not recommend any changes to the ASTM standard as a result of this testing at pools, and the Commission is not proposing any.

3. European Standard EN 1273:2005

CPSC staff evaluated another existing standard related to infant walkers to determine if any aspects of that standard should be considered for the future CPSC safety standard. The EN 1273:2005 European Standard contains two performance tests that are currently not in the ASTM F 977–07: the 30° incline plane stability test and the parking devices test.

The 30° incline plane test is a standard stability test which is common in several EN children's product safety standards. The walker, occupied by a 26.4 lb (12 kg) test mass is placed on a sloping platform inclined at 30° to the horizontal with a stop on the lower edge of the slope. The walker must not tip over.

The parking device test is only applicable to walkers that are equipped with a parking brake. It essentially requires conducting a semi-static version of the stair fall test, but with the parking device engaged. The walker must not move more than 1.97 inches (50 mm) in order to pass.

Available incident data does not clearly demonstrate whether inclusion of these two performance tests would improve the safety of walkers. CPSC staff tested selected walkers that currently pass the ASTM standard to these additional tests. The walkers also passed these tests. As discussed further in part F of this preamble, however, based on our sound engineering judgment, inclusion of these provisions may provide some additional safety.

F. Description of Proposed Changes to ASTM F 977–07

As discussed at part E.2 of this preamble, CPSC staff conducted tests and evaluations of infant walkers to determine any modification that might

be needed to the ASTM standard. Based on this assessment and consultations with others, the Commission proposes as a consumer product safety standard for infant walkers the ASTM F 977–07 standard with the following modifications.

To best understand the proposed standard it is helpful to view the current ASTM F 977–07 standard for walkers at the same time as the Commission's proposed modifications. The ASTM standard is available for viewing for this purpose during the comment period through this link: *http://www.astm.org/cpsc.htm*.

1. Changes to the Stair Step Fall Test

Specification of equipment and procedures. Currently, the ASTM stair fall test lacks numerous details. This allows for variability in testing that could result in different test results. The Commission is proposing to specify the equipment and procedure needed for the test (e.g., type of rope and pulley to be used, orientation of wood grain in the floor).

Additionally, the Commission proposes to modify the test procedure language in several provisions, such as specifying a tolerance for the term ''horizontal'' (0° ± 0.5°). These modifications would make the proposed standard more stringent than the ASTM standard if, due to the lack of clarity in the ASTM standard, some test laboratories are currently passing some walkers that do not in fact comply with the standard. In addition, minimizing friction in the test apparatus and flexure in the test table would maximize the transfer of dynamic energy to the walker and CAMI dummy, hence creating more stringent performance requirements.

Calculation of launching distance. The Commission is also proposing a change in the calculation of the launching distance used in the stair fall test. The Commission proposes weighing the walker and computing the appropriate launching distances using the equations below.

$$d_{CAMI} = \frac{\left(V_f^2 - V_o^2\right) * \left(W_{CAMI} + W_{walker} + W_{drop\ weight}\right)}{2_g\left(W_{drop\ weight} - \mu_k N_{CAMI}\right)}$$

$$d_{CAMI\ w/vest} = \frac{\left(V_f^2 - V_o^2\right) * \left(W_{CAMI\ w/vest} + W_{walker} + W_{drop\ weight}\right)}{2_g\left(W_{drop\ weight} - \mu_k N_{CAMI\ w/vest}\right)}$$

Where:

V_f = Maximum velocity of walker at edge of platform = 4 ft/sec (for forward and rearward directions); 2 ft/sec (for sideward direction)

V_o = Initial velocity = 0

W_{CAMI} = Weight of CAMI dummy = 17 lb

$W_{CAMI\ w/vest}$ = Weight of CAMI dummy with 11 lb vest = 28 lbs

W_{walker} = Weight of the walker

$W_{drop\ weight}$ = 8 lb

μ_k = Dynamic coefficient of friction = 0.05

N_{CAMI} = Normal force (for CAMI dummy scenario) = weight of CAMI dummy and walker

$N_{CAMI\ w/vest}$ = Normal force (for CAMI dummy fitted with 11 lb vest scenario) = weight of CAMI dummy + vest + walker

g = Acceleration of gravity = 32.2 ft/sec^2

The launching distances may vary depending on the weight of the walker and the maximum velocity of the walker at the edge of the platform (4 ft/sec or 2 ft/sec). The appropriate launching distances need to be computed for each walker model, in each direction, with and without the 11 pound vest. CPSC staff believes that if the walker weight is not appropriately accounted for, then it is possible the target maximum velocity cannot be achieved. For example, if the scenario involved computing distance d where the walker is tested in the forward direction with the CAMI dummy and the walker weight is 14 pounds, distance d would equal 18.0 inches (instead of 14.6 inches if the walker weight value is 8 pounds). The longer distance is needed to achieve the target velocity of 4 ft/sec. If a 14-pound walker is launched from 14.6 inches, the walker may not achieve the maximum velocity of 4 ft/sec. The proposed change will mean that each walker will be subjected to the same target maximum velocity even if the weight of the walkers varies. This proposed change may create more stringent performance requirements.

2. Addition of 30° Incline Plane Test and Parking Brake Test

As discussed above in part E.3 of this preamble, the Commission is proposing to add to the ASTM standard two provisions currently in the European Standard EN 1273:2005 for walkers.

The 30° incline plane test. Under this test, as explained above, a walker with a 26.4 pound (12 kg) test mass is placed on a sloping platform that is inclined at 30 degrees to the horizontal with a stop on the lower edge of the slope. In order to pass, the walker must not tip over. The current ASTM standard contains a provision to address children leaning out over the edge of the walker. The ASTM provision concerning leaning over the edge of the walker requires a cantilevered 17-pound force with approximately a 6 to 7 inch moment arm on a level surface. The 30° test uses a 26.4-pound test mass seated on a (up to) 14-pound walker on an incline plane. In certain scenarios, the 30° test may be more stringent.

The parking brake test. The parking brake test would apply to walkers that have parking brakes. It would not require walkers to have parking brakes. Under this test, the walker is set up to run a quasi-static version of the stair fall performance test, but with the parking device activated. If the walker moves a distance greater than 1.97 inches (50 mm), the walker fails the requirement. The parking brake test will ensure that, if a walker has a parking brake, it will work effectively. This could affect safety because, if a parking brake is present, caregivers may rely on it to temporarily stop the walker.

3. Summary of Proposed Changes to ASTM F 977–07

The more substantive proposed modifications to the ASTM standard for walkers have been discussed above in parts F.1 and F.2 of this preamble. A summary of these proposed changes and the other, more editorial/technical changes the Commission is proposing follows:

- Update the illustration of types of models of walkers in Figure 1 of the ASTM standard to include an open back design (proposed § 1216.2(b)(1)).
- Revise equipment specifications in section 4.6 of ASTM standard to eliminate brand and model of force gauge and provide performance

specification instead (proposed § 1216.2(b)(2) through (5)).

- Revise Figure 10 of the ASTM standard to show specific rope, other equipment and procedures for stair step test (proposed § 1216.2(b)(17)).
- In stair step test procedures, add a calculation (discussed above) to determine launching distance rather than assuming an 8-pound walker. (proposed § 1216.2(b)(7), (8), (11), (13), (15), (18), (20)).
- In stair step test procedures, specify the position for walker wheels (proposed § 1216.2(b)(7), (13), (18)).
- In stair step test procedures, specify the position for CAMI dummy. (proposed § 1216.2(b)(9)).
- In stair step test procedures, specify rope type, pulley type, and force to be applied. (proposed § 1216.2(b)(6), (10), (14), (19)).
- In stair step test procedures, require each aspect of test (forward, sideward, and rearward) three times to make it consistent with the European Standard EN 1273:2005 and allow more confidence in the test results. (proposed § 1216.2(b)(12), (16), (21)).
- Add the following warning concerning the parking brake if a walker has a parking brake: ''WARNING: Parking brake use does not totally prevent walker movement. Always keep child in view when in the walker, even when using the parking brakes.'' (proposed § 1216.2(b)(22)).
- Revise the stair hazard warning to state: ''Block stairs/steps securely before using walker, even when using parking brake.'' (proposed § 1216.2(b)(23)).
- Add 30° incline plane test (proposed § 1216.2(c)).
- Add parking device test (proposed § 1216.2(d)).

G. Request for Comments

This NPR begins a rulemaking proceeding under section 104(b) of the CPSIA to issue a consumer product safety standard for walkers. All interested persons are invited to submit their comments to the Commission on any aspect of the proposed rule. Comments should be submitted in accordance with the instructions in the **ADDRESSES** section at the beginning of this notice.

H. Effective Date

The Administrative Procedure Act (''APA'') generally requires that the effective date of a rule be at least 30 days after publication of the final rule. *Id.* 553(d). To allow time for infant walkers to come into compliance the Commission proposes that the standard would become effective 6 months after publication of a final rule.

I. Paperwork Reduction Act

The Commission is not proposing any collections of information in this regulation. Therefore, the Paperwork Reduction Act, 44 U.S.C. 3501–3520, does not apply.

J. Regulatory Flexibility Act

The Regulatory Flexibility Act (''RFA'') generally requires that agencies review proposed rules for their potential economic impact on small entities, including small businesses. 5 U.S.C. 603.

1. The Market

As mentioned above, there are currently at least seven manufacturers or importers supplying infant walkers to the U.S. market (four domestic manufacturers, two foreign manufacturers with divisions in the United States, and one domestic importer). Under Small Business Administration (SBA) guidelines, a manufacturer of infant walkers is small if it has 500 or fewer employees and an importer is considered small if it has 100 or fewer employees. Two domestic manufacturers (a third small manufacturer also sells baby walkers, but based on their current product list is no longer manufacturing them) and one domestic importer known to be supplying the United States market qualify as small businesses under these guidelines. However, CPSC staff believes that there are probably other unknown small importers operating in the United States market as well.

As noted above, all domestic manufacturers supplying infant walkers to the United States market certify their products as compliant with the current ASTM voluntary standard through the JPMA certification program. Based on limited CPSC staff testing, the two foreign manufacturers and the domestic importer are not believed to be complying with the current voluntary standard.

2. Impact of the Proposal

As stated above, the proposed changes to the existing stair fall test requirements would reduce variability across manufacturers. Also, because the specific test modifications have been selected to minimize the friction associated with the test procedure, they may effectively add stringency to the tests. It is unknown the extent (if any) to which the proposed modification in the existing stair fall requirements of the voluntary standard will affect walkers that now comply with the current voluntary standard. However, initial testing shows that the proposed requirements impact the test results of a few walkers. Therefore, it is possible that some manufacturers might need to make walker modifications to comply. Based on staff estimates of the costs of complying with the 1997 stair fall requirements, this cost is unlikely to exceed more than several dollars per unit.

Infant walkers are not currently required to have parking brakes, nor would they be required to have them under the proposed standard. However, the Commission proposes including a test of parking brakes if a walker has them to assure that they work properly. Initial testing finds that existing walkers have no difficulty in passing this requirement. Therefore, the Commission does not expect it to represent a burden to current manufacturers. However, its inclusion would minimize the risk of walkers with ineffective brakes entering the United States market in the future.

The 30° incline plane test that the Commission proposes adding to the ASTM standard is comparable to, and may be duplicative of, the ''Occupant Leaning Outward Over Edge Test'' in the current voluntary standard. Like the existing requirement, it tests walker vulnerability to tip-over. The safety impact of this inclusion is unclear, but may provide additional safety to walkers over and above the existing requirement. Based on limited testing, it appears that several walkers would pass these added tests without modifications.

As noted before, of the seven firms currently known to be marketing infant walkers in the United States, three are small firms—two small domestic manufacturers and a small domestic importer. Below is a discussion of the possible impact of the proposal on these entities.

Small manufacturers. The two small domestic manufacturers (which are JPMA certified as compliant with the voluntary standard) may not need to make product modifications. If they do, it will most likely be due to changes needed to comply with the proposed modifications to the stair fall requirements. The costs to these manufacturers are not likely to be substantial, but may increase by as much as several dollars per unit.

Small importers. The only known small domestic importer is not believed to be compliant with the current voluntary standard; therefore, at least some product modifications would be necessary. The impact of the proposed infant walker requirements on this importer is unclear, because little is known about the walkers sold by this company. However, the impact is unlikely to be large. Even if the company responded to the rule by

discontinuing the import of its non-complying walkers, either replacing them with a complying product or another juvenile product, deciding to import an alternative product would be a reasonable and realistic way to offset any lost revenue from walker sales.

There also may be importers of walkers that we have been unable to identify. However, the impacts of the proposed rule on these firms, if any, are unknown.

3. Alternatives

Under section 104 of the CPSIA, the primary alternative that would reduce the impact on small entities is to make the voluntary standard mandatory with no modifications. Because the two small domestic manufacturers already meet the requirements of the voluntary standard, adopting the standard without modifications may reduce their costs, but only marginally. Similarly, limiting the requirements of the standard to those already contained in the voluntary standard would probably have little beneficial impact on small importers that do not currently meet the requirements of the voluntary standard. This is because, to these firms, most of the infant walker cost increases would be associated with meeting the requirements of the current voluntary standard, rather than the minor add-ons associated with the proposed standard.

4. Conclusion of initial regulatory flexibility analysis

It is not expected that the proposed standard will have a substantial effect on a large number of small firms. In some cases, small firms may not need to make *any* product modifications to achieve compliance. Even if modifications were necessary, and the cost of developing a compliant product proved to be a barrier for individual firms, the loss of infant walkers as a product category is expected to be minor and would likely be mitigated by increased sales of competing products, such as activity centers, or entirely different juvenile products.

K. Environmental Considerations

The Commission's regulations provide a categorical exemption for the Commission's rules from any requirement to prepare an environmental assessment or an environmental impact statement as they ''have little or no potential for affecting the human environment.'' 16 CFR 1021.5(c)(2). This proposed rule falls within the categorical exemption.

List of Subjects in 16 CFR Part 1216

Consumer protection, Imports, infants and children, Labeling, Law enforcement, and Toys.

Therefore, the Commission proposes to amend Title 16 of the Code of Federal Regulations by adding part 1216 to read as follows:

PART 1216—SAFETY STANDARD FOR INFANT WALKERS

Sec.

1216.1 Scope, application and effective date.
1216.2 Requirements for infant walkers.

Authority: The Consumer Product Safety Improvement Act of 2008, Pub. L. 110–314, 104, 122 Stat. 3016 (August 14, 2008).

§ 1216.1 Scope, application and effective date.

This part 1216 establishes a consumer product safety standard for infant walkers manufactured or imported on or after March 3, 2010.

§ 1216.2 Requirements for infant walkers.

(a) Except as provided in paragraphs (b), (c) and (d) of this section, each infant walker shall comply with all applicable provisions of ASTM F 977–07, Standard Consumer Safety Specification for Infant Walkers, approved April 1, 2007. The Director of the Federal Register approves this incorporation by reference in accordance with 5 U.S.C. 552(a) and 1 CFR part 51. You may obtain a copy from ASTM International, 100 Bar Harbor Drive, PO Box 0700, West Conshohocken, PA 19428; *http://www.astm.org.* You may inspect a copy at the Office of the Secretary, U.S. Consumer Product Safety Commission, Room 502, 4330 East West Highway, Bethesda, MD 20814, telephone 301–504–7923, or at the National Archives and Records Administration (NARA). For information on the availability of this material at NARA, call 202–741–6030, or go to: *http://www.archives.gov/federal_register/code_of_federal_regulations/ibr_locations.html.*

(b) The following provisions replace, or are added to, the indicated sections of the ASTM F 977–07 standard.

(1) Instead of Figure 1:

BILLING CODE 6355–01–P

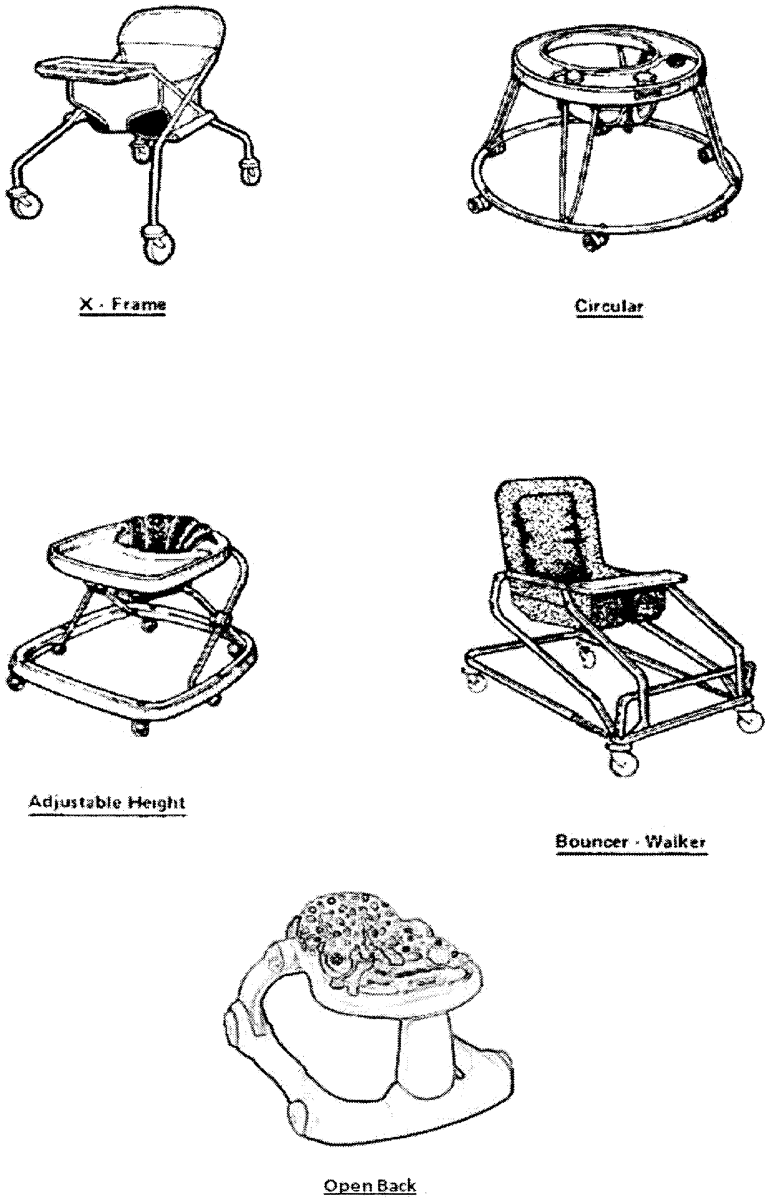

Figure 1 Illustration of Types of Infant Walkers

BILLING CODE 6355–01–C

(2) Instead of section 4.6.1: ''Equipment—Force gauge with a range of 0 to 25 lbf (110 N), tolerance of ± 1 Div., and a calibration interval of 1 year.''

(3) Delete sections 4.6.2 through 4.6.4.

(4) Instead of section 4.6.5: ''Equipment—Force gauge with a range 0 to 100 lbf (500 N) tolerance of ± 1 Div., and a calibration interval of 1 year.''

(5) Delete sections 4.6.6 through 4.6.8.

(6) Instead of section 7.6.1.2: ''The dummy may be secured to the tray to maintain contact during the test. Raise the dummy's legs just enough so its feet do not touch the platform during the performance of the test and position using the rope specified in Figure 10.''

(7) Instead of section 7.6.3.1: ''Center the walker on the test platform facing forward so that Plane A is perpendicular to the front edge of the platform and the walker is distance d from the center of the most forward wheel(s) to the edge of the test platform,

$$d_{CAMI} = \frac{\left(V_f^2 - V_o^2\right) * \left(W_{CAMI} + W_{walker} + W_{drop\ weight}\right)}{2_g\left(W_{drop\ weight} - \mu_k N_{CAMI}\right)}$$

Where:

V_f = Maximum velocity of walker at edge of platform = 4 ft/sec
V_o = Initial velocity = 0
W_{CAMI} = Weight of CAMI dummy = 17 lb
W_{walker} = Weight of the walker
$W_{drop\ weight}$ = Drop weight = 8 lb
μ_k = Dynamic coefficient of friction = 0.05
N_{CAMI} = Normal force (for CAMI dummy scenario) = weight of CAMI dummy and walker
g = acceleration of gravity = 32.2 ft/sec^2

Position the swivel wheels in such a way that the walker moves forward in a straight line parallel to Plane A.''

(8) Instead of Table 1 Summary of Step(s) Tests:

TABLE 1—SUMMARY OF STEP(S) TESTS

Section No.	Facing direction of walker	Weight of CAMI dummy, lb	Simulated speed, ft/s	Apply tipover test
7.6.3	forward	17	4	yes.
7.6.3.6	forward	28 (vest)	4	yes.
7.6.4	sideward	17	2	yes.
7.6.4.6	sideward	28 (vest)	2	yes.
7.6.5	rearward	17	4	no.
7.6.5.5	rearward	28 (vest)	4	no.

(9) Instead of section 7.6.3.2: ''Place a CAMI infant dummy Mark II in the walker and position it as shown in Fig. 11 with the torso contacting the front of the occupant seating area and arms placed on the walker tray.''

(10) Instead of section 7.6.3.3: ''While holding the walker stationary, attach an 8 lb (3.6 kg) weight to the front of the walker base at Plane A by means of a 7-strand military rope with 550 lb tensile strength (e.g., paracord 550) and a stainless steel ball bearing pulley with an outside diameter of 1.25 in (32mm) and adjust the pulley so that the force is applied horizontally (0 ± 0.5° with respect to the table surface).''

(11) Instead of section 7.6.3.6: ''Repeat 7.6.3.1–7.6.3.5 using the CAMI dummy with the weighted vest (see Fig. 12) and with distance *d*, computed using the following equation:

$$d_{CAMI\ w/vest} = \frac{\left(V_f^2 - V_o^2\right) * \left(W_{CAMI\ w/vest} + W_{walker} + W_{drop\ weight}\right)}{2_g\left(W_{drop\ weight} - \mu_k N_{CAMI\ w/vest}\right)}$$

Where:

V_f = Maximum velocity of walker at edge of platform = 4 ft/sec
V_o = Initial velocity = 0
$W_{CAMI\ w/vest}$ = Weight of CAMI dummy with 11 lb vest = 28 lbs
W_{walker} = Weight of the walker
$W_{drop\ weight}$ = Drop weight = 8 lb
μ_k = Dynamic coefficient of friction = 0.05
$N_{CAMI\ w/vest}$ = Normal force (for CAMI dummy fitted with 11 lb vest scenario) = weight of CAMI dummy + vest weight + walker weight
g = acceleration of gravity = 32.2 ft/sec^2

(12) After section 7.6.3.6, add a new section 7.6.3.7: ''Repeat tests in the following sequence: section 7.6.3.4, section 7.6.3.5, and section 7.6.3.6 two additional times.''

(13) Instead of 7.6.4.1: ''Center the walker on the test platform facing sideways so that Plane B is perpendicular to the front edge of the platform and the walker is distance *d* from the center of the most sideward wheel(s) to the edge of the test platform,

$$d_{CAMI} = \frac{\left(V_f^2 - V_o^2\right) * \left(W_{CAMI} + W_{walker} + W_{drop\ weight}\right)}{2_g\left(W_{drop\ weight} - \mu_k N_{CAMI}\right)}$$

Where:

V_f = Maximum velocity of walker at edge of platform = 2 ft/sec
V_o = Initial velocity = 0
W_{CAMI} = Weight of CAMI dummy =17 lb
W_{walker} = Weight of the walker
$W_{drop\ weight}$ = Drop weight = 8 lb
μ_k = Dynamic coefficient of friction = 0.05
N_{CAMI} = Normal force (for CAMI dummy scenario) = weight of CAMI dummy and walker
g = acceleration of gravity = 32.2 ft/sec^2

Position the swivel wheels in such a way that the walker moves sideward in a straight line parallel to Plane A.''

(14) Instead of section 7.6.4.3: ''While holding the walker stationary, attach an 8 lb (3.6 kg) weight to the side of the walker base at Plane B by means of a rope (as specified in 7.6.3.3) and a pulley (as specified in 7.6.3.3) and adjust the pulley so that the force is applied horizontally (0 ± 0.5° with respect to the table surface).''

(15) Instead of section 7.6.4.6: ''Repeat 7.6.4.1 through 7.6.4.5 using the CAMI dummy with the weighted vest (see Fig. 12) and with distance *d*, computed using the following equation:

$$d_{CAMI} = \frac{\left(V_f^2 - V_o^2\right) * \left(W_{CAMI} + W_{walker} + W_{drop\ weight}\right)}{2_g\left(W_{drop\ weight} - \mu_k N_{CAMI}\right)}$$

Where:

V_f = Maximum velocity of walker at edge of platform = 2 ft/sec

V_o = Initial velocity = 0

$W_{CAMI\ w/vest}$ = Weight of CAMI dummy with 11 lb vest = 28 lbs

W_{walker} = Weight of the walker

$W_{drop\ weight}$ = Drop weight = 8 lb

μ_k = Dynamic coefficient of friction = 0.05

$N_{CAMI\ w/vest}$ = Normal force (for CAMI dummy fitted with 11 lb vest scenario) = weight of CAMI dummy + vest weight + walker weight

g = acceleration of gravity = 32.2 ft/sec^2''

(16) After section 7.6.4.6, add a new section 7.6.4.7: ''Repeat tests in the following sequence: section 7.6.4.4, section 7.6.4.5, and section 7.6.4.6 two additional times.''

(17) Instead of Figure 10:

BILLING CODE 6355–01–P

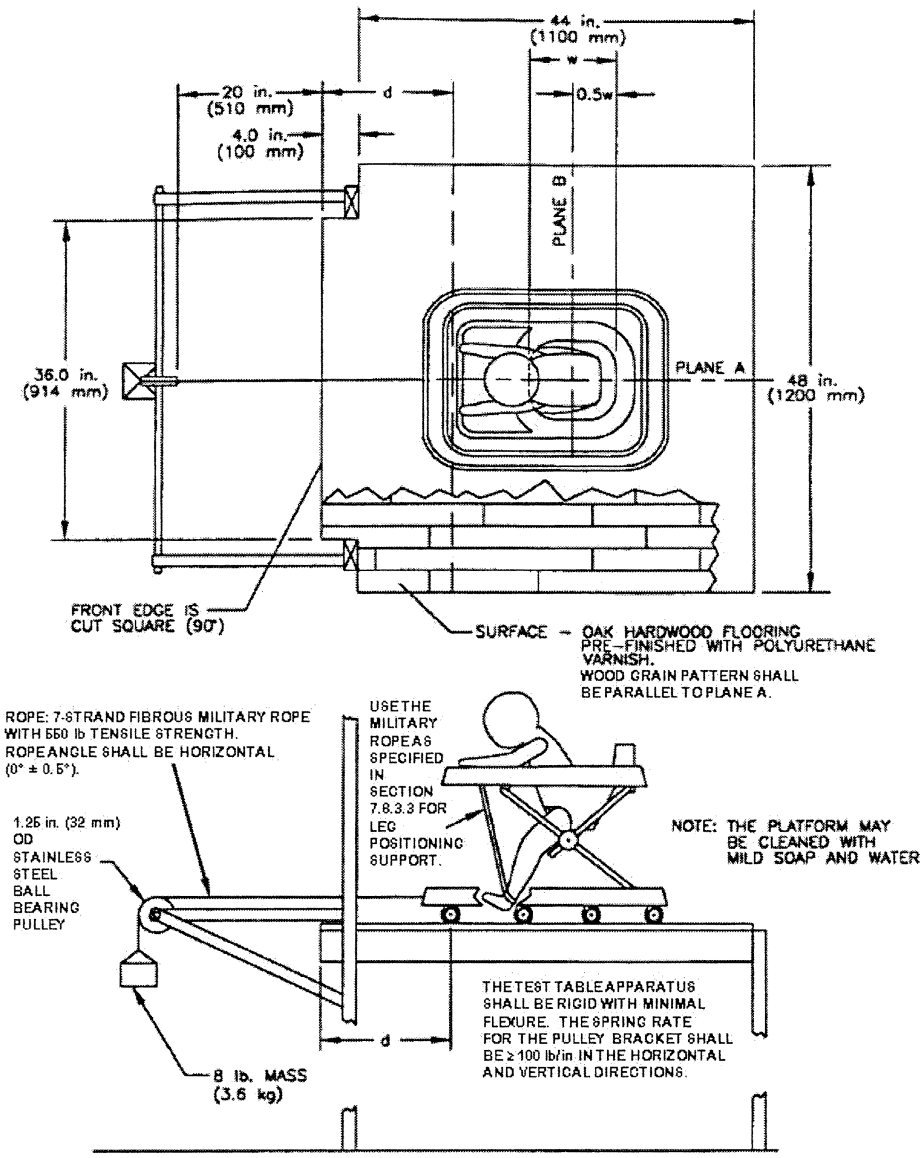

Figure 10 Test Platform Specifications

BILLING CODE 6355–01–C

(18) Instead of section 7.6.5.1: ''Center the walker on the test platform facing rearward so that Plane A is perpendicular to the front edge of the platform and the walker is distance d from the center of the most rearward wheel(s) to the edge of the test platform,

$$d_{CAMI} = \frac{\left(V_f^2 - V_o^2\right) * \left(W_{CAMI} + W_{walker} + W_{drop\ weight}\right)}{2_g\left(W_{drop\ weight} - \mu_k N_{CAMI}\right)}$$

Where:

V_f = Maximum velocity of walker at edge of platform = 4 ft/sec
V_o = Initial velocity = 0
W_{CAMI} = Weight of CAMI dummy = 17 lb
W_{walker} = Weight of the walker
$W_{drop\ weight}$ = Drop weight = 8 lb
μ_k = Dynamic coefficient of friction = 0.05
N_{CAMI} = Normal force (for CAMI dummy scenario) = weight of CAMI dummy and walker
g = acceleration of gravity = 32.2 ft/sec^2

Position the swivel wheels in such a way that the walker moves rearward in a straight line parallel to Plane A. If the walker has an open back design, attach the 1 in aluminum angle used in 7.3.4 to span the back frame.''

(19) Instead of section 7.6.5.3: ''While holding the walker stationary, attach an 8 lb (3.6 kg) weight to the rear of the walker base at Plane A by means of a rope (as specified in 7.6.3.3) and a pulley (as specified in 7.6.3.3) and adjust the pulley so that the force is applied horizontally (0 ± 0.5° with respect to the table surface).''

(20) Instead of section 7.6.5.5: ''Repeat 7.6.5.1 through 7.6.5.4 using the CAMI dummy with the weighted vest (see Fig. 12) and with distance d, computed using the following equation:

$$d_{CAMI\ w/vest} = \frac{\left(V_f^2 - V_o^2\right) * \left(W_{CAMI\ w/vest} + W_{walker} + W_{drop\ weight}\right)}{2_g\left(W_{drop\ weight} - \mu_k N_{CAMI\ w/vest}\right)}$$

Where:

V_f = Maximum velocity of walker at edge of platform = 4 ft/sec
V_o = Initial velocity = 0
$W_{CAMI\ w/vest}$ = Weight of CAMI dummy with 11 lb vest = 28 lbs
W_{walker} = Weight of the walker
$W_{drop\ weight}$ = Drop weight = 8 lb
μ_k = Dynamic coefficient of friction = 0.05
$N_{CAMI\ w/vest}$ = Normal force (for CAMI dummy fitted with 11 lb vest scenario) = weight of CAMI dummy + vest weight + walker weight
g = acceleration of gravity = 32.2 ft/sec^2

(21) After section 7.6.5.5, add a new section 7.6.5.6: ''Repeat tests in the following sequence: section 7.6.5.3, and section 7.6.5.5 two additional times.''

(22) Between section 8.2.3.2 and section 8.2.4, add a new section 8.2.3.3: ''A warning statement shall address the following: *Warning:* Parking brake use does not totally prevent walker movement. Always keep child in view when in the walker, even when using the parking brakes.''

(23) Instead of section 8.2.4.2: ''The stairs warning shall be stated exactly as follows:

```
⚠ WARNING - STAIR HAZARD
Avoid serious injury or death
Block stairs/steps securely before using walker, even
when using parking brake."
```

(c) *Static stability 30° incline plane test*—

(1) *Requirement.* When tested to the procedure described in paragraph (c)(3) of this section, the infant walker shall not overturn.

(2) *Test equipment.* (i) A sloping platform inclined at 30° to the horizontal with a stop fitted to the lower edge of the slope. The height of the stop shall be 3.94 in (100 mm). See Figure 15.

(ii) Test Mass A: A rigid cylinder 6.30 in ± 0.04 in (160 mm ± 1 mm) in diameter, 11.02 in ± 0.04 in (280 mm ± 1 mm) in height with a mass of 26.4 lb (12 kg), with its center of gravity in the center of the cylinder. All edges shall have a radius of 0.79 in ± 0.04 in (20 mm ± 1mm).

(iii) Test Mass B: A rigid cylinder 6.30 in ± 0.04 in (160 mm ± 1 mm) in diameter, 11.02 in ± 0.04 in (280 mm ± 1 mm) in height with a mass of 16.8 lb (7.65 kg), with its center of gravity in the center of the cylinder.

(3) *Test method.* (i) Adjustable seats shall be adjusted to their highest position. Place Test Mass A vertically in the center of the walker seat. To restrict movement of the test mass, packing of negligible mass may be used. Position the castors or wheels in their most onerous position. Place the walker on the slope against the stop. Carry out the test in the forward, sideward, and rearward directions.

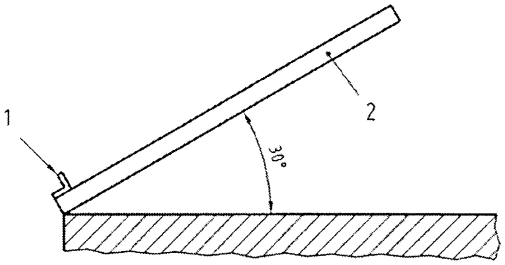

FIGURE 15

(d) *Parking device test (applicable to walkers equipped with parking brakes)*—

(1) Requirement. When tested to the procedures in paragraph (d) of this section, the infant walker shall have a maximum displacement of 1.97 inches (50 mm) for each test in each direction (forward, rearward, and sideward).

(2) *Test equipment.* (i) A test platform as specified in Figure 10 with a hardwood floor pre-finished with polyurethane.

(ii) Test Mass A and Test Mass B as specified in paragraph (c)(2)(ii) and (iii) of this section.

(3) *Test method. (i) Preparation and procedure.*

(A) Adjust the walker seat to the highest position (if applicable). Place Test Mass A vertically in the walker seat. Set any manual speed control to the fastest position (if applicable). Establish a vertical plane A that passes through the center of the seating area and is parallel to the direction the child faces. Establish a vertical plane B that is perpendicular to plane A and passes through the center of the seating area.

(B) Perform the parking device test in the forward, sideward, and rearward directions.

(ii) *Forward facing test of parking devices.*

(A) Position the walker including Test Mass B facing forward so that plane A is perpendicular to the front edge of the platform and passes through the center of the pulley. Engage all parking devices in accordance with the manufacturer's instructions.

(B) Within one minute of placing the walker with Test Mass B on the platform, attach an 8 lb weight gradually within 5 seconds to the walker frame base at plane A by means of a rope and a pulley per the test apparatus specifications in the step test procedure, adjusted so that the force is applied horizontally (rope angle shall be 0 ± 0.5°). Remove the 8 lb weight after 1 minute. Measure the displacement.

(iii) *Sideward facing test of parking devices.*

(A) Position the walker including Test Mass B facing sideward so that plane B is perpendicular to the front edge of the platform and passes through the center of the pulley. Engage all parking devices in accordance with the manufacturer's instructions.

(B) Within one minute of placing the walker with Test Mass B on the platform, attach an 8 lb weight gradually within 5 seconds to the walker frame base at plane B by means of a rope and a pulley per the test apparatus specifications in the step test procedure, adjusted so that the force is applied horizontally (rope angle shall be 0 ± 0.5°). Remove the 8 lb weight after 1 minute. Measure the displacement.

(iv) *Rearward facing test of parking devices.*

(A) Position the walker including Test Mass B facing rearward so that plane A is perpendicular to the front edge of the platform and passes through the center of the pulley. Engage all parking devices in accordance with the manufacturers' instructions.

(B) Within one minute of placing the walker with Test Mass B on the platform, attach an 8 lb weight gradually within 5 seconds to the walker frame base at plane A by means of a rope and a pulley per the test apparatus specifications in the step test procedure, adjusted so that the force is applied horizontally (rope angle shall be 0 ± 0.5°). Remove the 8 lb weight after 1 minute. Measure the displacement.

Dated: August 25, 2009.

Todd Stevenson,

Secretary, U.S. Consumer Product Safety Commission.

[FR Doc. E9–20946 Filed 9–2–09; 8:45 am]

BILLING CODE 6355–01–P

CONSUMER PRODUCT SAFETY COMMISSION

16 CFR Part 1500

[CPSC Docket No. CPSC–2009–0066]

Revocation of Regulation Banning Certain Baby-Walkers, Walker-Jumpers, and Similar Products

AGENCY: Consumer Product Safety Commission.

ACTION: Proposed rule.

SUMMARY: The Consumer Product Safety Commission (''CPSC'' or ''Commission'') is proposing to revoke certain regulations pertaining to baby-bouncers, walker-jumpers, baby-walkers, and similar products. CPSC is taking this action because the regulations, which originally were issued in 1971, are outdated and do not provide the degree of safety that is provided by currently manufactured baby-walkers that comply with a more effective voluntary standard. This action also will eliminate confusion about whether manufacturers should certify that their products comply with these regulations or with a new mandatory safety standard for baby-walkers proposed elsewhere in this issue of the **Federal Register**.

DATES: Submit comments by November 2, 2009.

ADDRESSES: To ensure timely processing of comments, the Commission is no longer directly accepting comments submitted by electronic mail (e-mail). The Commission encourages you to submit electronic comments by using the Federal eRulemaking Portal, as described below in paragraph 1, ''Electronic Submissions.''

You may submit comments, identified by Docket No. CPSC–2009–0066, by any of the following methods:

1. Electronic Submissions.

Submit electronic comments to the Federal eRulemaking Portal: *http://frwebgate.access.gpo.gov/cgi-bin/leaving.cgi?from=leavingFR.html&log=linklog&to=http://www.regulations.gov.*

Follow the instructions for submitting comments.

2. Written Submissions.

Submit written submissions in the following ways:

FAX: 301–504–0127.

Mail/Hand delivery/Courier (for paper, disk, or CD–ROM submissions): Office of the Secretary, Consumer Product Safety Commission, Room 502, 4330 East West Highway, Bethesda, MD 20814.

Instructions: All submissions received must include the agency name and docket number for this rulemaking. All comments received, including any personal information provided, may be posted without change to *http://frwebgate.access.gpo.gov/cgi-bin/leaving.cgi?from=leavingFR.html&log=linklog&to=http://www.regulations.gov*. Accordingly, we recommend that you not submit confidential business information, trade secret information, or other sensitive information that you do not want to be available to the public. For additional information on comments, see part E of the **SUPPLEMENTARY INFORMATION** section of this document.

Docket: For access to the docket to read background documents or comments received, go to *http://frwebgate.access.gpo.gov/cgi-bin/leaving.cgi?from=leavingFR.html&log=linklog&to=http://www.regulations.gov* and insert the docket number, found in brackets in the heading of this document, into the ''Search'' box and follow the prompts.

FOR FURTHER INFORMATION CONTACT:

Technical information. Patricia Edwards, Division of Mechanical Engineering, Consumer Product Safety Commission, 4330 East West Highway, Bethesda, MD 20814, 301–504–7577, *pedwards@cpsc.gov*.

Legal information. Harleigh Ewell, Office of the General Counsel, Consumer Product Safety Commission, 4330 East West Highway, Bethesda, MD 20814, 301–504–7683, *hewell@cpsc.gov*.

SUPPLEMENTARY INFORMATION:

A. Background

1. *The CPSC's regulation for baby-walkers.* CPSC regulations at 16 CFR 1500.18(a)(6) and 1500.86(a) ban any '' 'baby-bouncer,' 'walker-jumper', or 'baby-walker' and any other similar article'' (referred to below as ''baby-walkers'') that does not meet specified safety criteria. These regulations were issued in 1971 by the Food and Drug Administration (''FDA'') under the Federal Hazardous Substances Act (''FHSA''), 15 U.S.C. 1261–1278 (available at *http://www.cpsc.gov/businfo/fhsa.pdf*). 36 FR 21809 (Nov. 16, 1971). On May 14, 1973, the functions under the FHSA were transferred to the then newly-created CPSC.

Specifically, 16 CFR 1500.18(a)(6) bans baby-walkers and ''any other similar article'' that is intended to support very young children while ''sitting, walking, bouncing, jumping, and/or reclining,'' and which, because of its design, has any exposed parts capable of causing amputation, crushing, lacerations, fractures, hematomas, bruises, or other injuries to fingers, toes, or other parts of the anatomy of young children. The regulation describes the hazardous design features of such articles warranting the ban as including, but not being limited to, one or more of the following:

- Areas about the point on each side of the article where the frame components are joined together to form an X-shape capable of producing a scissoring, shearing, or pinching effect;
- Other areas where two or more parts are joined in such a manner as to permit rotational movement capable of exerting a scissoring, shearing, or pinching effect;
- Exposed coil springs which may expand sufficiently to allow an infant's finger, toe, or other body part to be inserted, in whole or in part, and injured by being caught between the coils of the spring or between the spring and another part of the article;
- Holes in plates or tubes which also provide the possibility of insertion of a finger, toe, or other part of the anatomy that could then be injured by the movement of another part of the article; or
- A design and construction that permits accidental collapse while in use.

Exemptions to the ban can be found at 16 CFR 1500.86(a)(4). These include any baby-walker where:

- The frames are designed and constructed in a manner to prevent injury from any scissoring, shearing, or pinching when the members of the frame or other components rotate about a common axis or fastening point or otherwise move relative to one another; and
- Any coil springs which expand when the article is subjected to a force that will extend the spring to its maximum distance so that a space between successive coils is greater than one-eighth inch (0.125 inch) are covered or otherwise designed to prevent injuries; and
- All holes larger than one-eighth inch (0.125 inch) in diameter, and slots, cracks, or hinged components in any portion of the article through which a child could insert, in whole or in part, a finger, toe, or any other part of the anatomy, are guarded or otherwise designed to prevent injuries; and
- The articles are designed and constructed to prevent accidental collapse while in use; and
- The articles are designed and constructed in a manner that eliminates from any portion of the article the possibility of presenting a mechanical hazard through pinching, bruising, lacerating, crushing, breaking, amputating, or otherwise injuring portions of the human body when in normal use or when subjected to reasonably foreseeable damage or abuse; and
- Any article which is introduced into interstate commerce after the effective date of [the regulation] is labeled:

—With a conspicuous statement of the name and address of the manufacturer, packer, distributor, or seller; and

—With a code mark on the article itself and on the package containing the article or on the shipping container, in addition to the invoice(s) or shipping document(s), which code mark will permit future identification by the manufacturer of any given model (the manufacturer shall change the model number whenever the article undergoes a significant structural or design modification); and

- The manufacturer or importer of the article shall make, keep, and maintain for 3 years records of sale, distribution, and results of inspections and tests conducted in accordance with this subparagraph and shall make such records available at all reasonable hours upon request by any officer or employee of the Consumer Product Safety Commission and shall permit such officer or employee to inspect and copy such records, to make such stock inventories as such person deems necessary, and to otherwise check the correctness of such records.

The existing regulations do not include any requirements specifically pertaining to hazards associated with falls down stairs, structural integrity, occupant retention, or loading/stability issues.

As discussed earlier in this part A.1 of this preamble, the regulations at 16 CFR 1500.18(a)(6) and 1500.86(a) apply to any ''baby-bouncer,'' ''walker-jumper,'' ''baby-walker,'' and ''any other similar article.'' The regulations do not define those terms, and when FDA promulgated those regulations in 1971,

it expressly rejected comments that sought a description of the regulated articles. In the preamble to its final rule that appeared in the **Federal Register** of November 16, 1971 (36 FR 21809), FDA stated that the terms ''baby-bouncers'' and ''baby-walkers'' are ''used both by industry and the general public'' and revised the phrase, ''and similar articles,'' to ''and any other similar article'' to clarify the regulations' purpose ''to include within their scope all articles conforming to the descriptions in the regulations whether or not they are called by those specific names.''

2. *The voluntary standard for infant-walkers.* The current voluntary standard for Infant Walkers, *The Standard Consumer Safety Specification for Infant Walkers* (ASTM F977–07) is published by the American Society for Testing and Materials (now ASTM International, or ASTM) (Memorandum from P. Edwards, Project Manager, to the Commission dated Aug. 14, 2009). The ASTM voluntary standard defines an infant walker as ''a mobile unit that enables a child to move on a horizontal surface when propelled by the child sitting or standing within the walker, and that is in the manufacturer's recommended use position.'' This standard has provisions to address the following:

- Latching or Locking Mechanisms;
- Openings;
- Scissoring, Shearing, and Pinching;
- Exposed Coil Springs;
- Labeling;
- Protective Components;
- Stability;
- Structural Integrity;
- Occupant Retention; and
- Prevention of Falls Down Step(s).

ASTM F977–07 contains provisions pertaining to scissoring, shearing, pinching, and accidental collapse that are stricter, or more conservative, than the existing CPSC regulation. With regard to exposed coil springs and openings, the ASTM voluntary standard differs somewhat from the existing CPSC regulation. The specifications in ASTM F977–07 for coil springs and openings (holes) are similar in concept to those in the mandatory regulation, but are less restrictive as to allowable dimensions. For instance, the voluntary standard prohibits any hole or slot between 0.210″ and 0.375″ in size that extends entirely through a wall section of any rigid material less than 0.375″ thick. The existing regulation bans any baby-walker that contains a hole larger than 0.125″ in diameter, and it does not contain a depth requirement.

The rationale for the ASTM standard was based on anthropometric data developed for the CPSC by the University of Michigan in 1975. (Snyder, R. G., Spencer, M. L., Owings, C. L. & Schneider, L. W. (1975), *Physical Characteristics of Children As Related to Death and Injury for Consumer Product Design and Use, Prepared for the Consumer Product Safety Commission (UM–HSRI–BI–75–5 Final Report Contract FDA–72–70 May 1975)*, Highway Safety Research Institute, The University of Michigan, May 31, 1975.) This data set sampled body measurements of children from 2 weeks to 13 years of age. The measurements relevant here are the little finger diameter and middle finger diameter. The intent of the ASTM standard is to prevent entrapments by making openings either too small for the smallest user to penetrate with their smallest finger or larger than the largest user's biggest finger (thereby allowing the finger to be withdrawn without entrapment). The existing CPSC regulations were never revised nor updated to take this data into consideration. Thus, the requirements in the CPSC regulations are outdated in this respect.

The University of Michigan study is also the basis for the specifications for allowable openings that are in other ASTM juvenile-product standards. In addition to the study's validity, the standards use this data because the less restrictive dimensional specification allows for products to be made from thinner materials with reinforced ribbing, such as injection molded plastics. When the existing CPSC regulations were published, baby-walkers were typically made with metal tube frames. Molded plastics are used more predominately today in juvenile products, and, when manufactured in accordance with the ASTM specifications for openings, these materials have not been shown to create finger or toe entrapment or pinch hazards.

The inclusion of the terms ''baby-bouncers'' and ''walker-jumpers'' in the regulations may be because some baby-walkers had spring-like devices, and the occupant could bounce or jump while also moving horizontally.

A bouncer seat, as currently defined by ASTM, is a freestanding product intended to support an occupant in a reclined position to facilitate bouncing by the occupant. Intended occupants are infants who have not developed the ability to sit up unassisted (approximately 0 to 6 months of age). These products are covered by ASTM voluntary standard F2167, *Standard Consumer Safety Specification for Infant Bouncer Seats.*

Jumpers are not defined in any ASTM standard, but there are some juvenile products known as jumpers. These include seats suspended from door frames that facilitate jumping. Although these jumpers are not covered by a voluntary standard, the Commission's staff is not aware of any recent incidents involving these products that would have been prevented by the regulations. Apparently, these products do not currently present the hazards addressed by the regulations.

There also are jumpers mounted on a dedicated freestanding frame. These jumpers are covered under ASTM voluntary standard F2012, *Standard Consumer Safety Performance Specifications for Stationary Activity Centers.*

3. *Incident data.* The known baby-walker incidents from the year 2000 to the present uncovered no incidents where fingers were pinched, stuck, or entrapped and the specific circumstances were known. From the information available, it appears that the causes of most incidents are outside the scope of CPSC's regulations. CPSC staff did not find any incidents that would be directly impacted if the Commission were to revoke the regulations. Most baby-walker incidents resulting in injuries or deaths are a result of the product falling down steps, a hazard that is not addressed by the existing regulations but that is covered under ASTM's voluntary standard.

4. *Compliance/Recall Information.* The Commission's Office of Compliance reviewed the recalls and cases opened on baby-walkers over the last 20 years. The Compliance staff did not find any recalls associated with openings or coil springs. One case occurred where the regulation's requirements for openings and coil springs were not met. This case was found when a baby-walker was intercepted at the port of entry. The primary hazard associated with this product was lack of stair fall protection. Compliance staff also is not aware of any recalls for finger entrapment hazards in any other juvenile products that conform to ASTM's specifications for openings. This indicates that the voluntary standards are adequate to address the openings hazard.

B. Future Mandatory Regulation of Baby-Walkers

The Consumer Product Safety Improvement Act of 2008 (''CPSIA''), Public Law 110–314, 122 Stat. 3016 (available at *http://www.cpsc.gov/cpsia.pdf*), was enacted on August 14, 2008. The CPSIA contains some requirements with broad applicability, as well as some product-specific

provisions. Section 104 of the CPSIA directs the Commission to take a number of actions concerning ''durable infant or toddler products.'' Section 104(f) of the CPSIA defines a durable infant or toddler product as a durable product intended for use, or that may be reasonably expected to be used, by children under the age of 5 years. This includes cribs, toddler beds, high chairs, booster chairs, hook-on chairs, bath seats, gates and other enclosures for confining a child, play yards, stationary activity centers, infant carriers, strollers, walkers, swings, bassinets, and cradles. Section 104(b) of the CPSIA provides, in part, that the Commission shall, in consultation with representatives of consumer groups, juvenile product manufacturers, and independent child product engineers and experts, examine and assess the effectiveness of any voluntary consumer product safety standards for durable infant or toddler products. The Commission is also directed to promulgate consumer product safety standards that are substantially the same as such voluntary standards or that are more stringent than such voluntary standards, if the Commission determines that more stringent standards would further reduce the risk of injury associated with the products.

Section 104(b) of the CPSIA also specifies that these new mandatory standards for durable infant or toddler products shall be issued on a compressed schedule. The statute directs the Commission to begin the rulemaking for these standards by August 14, 2009, and to promulgate standards for no fewer than two categories of durable infant or toddler products every six months thereafter, beginning with the product categories that the Commission determines to be of highest priority. This process will continue until the Commission has promulgated standards for all such product categories.

Baby-walkers are one of the first two products addressed in these rulemakings. Elsewhere in this issue of the **Federal Register**, the Commission is proposing a safety standard for baby-walkers. Thus, the Commission expects that there will be an updated, more effective mandatory standard for baby walkers issued by February 14, 2010. The Commission expects that the requirements of that mandatory standard will be based largely on the provisions of the current ASTM voluntary standard, discussed earlier in part A.2 of this preamble.

To illustrate how a new regulation might use concepts currently seen in the ASTM voluntary standard, the current regulations at 16 CFR 1500.18(a)(6) and 1500.86(a) do not contain requirements to protect against falls down stairs. The voluntary ASTM standard, however, does contain a stair-fall protection provision for baby walkers that provides that a walker must either stop at the edge of a step or be too wide to fit through a standard-size doorway. There have been numerous incidents and deaths associated with baby walkers that do not contain stoppers or brakes to prevent walkers from falling down stairs. CPSC's Compliance staff has conducted numerous recalls involving baby walkers due to the lack of stair-fall protection. If the CPSC were to promulgate regulations to address stair-fall protection and make any walker that does not contain stair-fall protection a banned product, a number of future incidents and deaths from stair falls would be prevented.

C. Required Accredited Third Party Testing and Certification for Baby-Walkers

Section 14(a)(2) of the Consumer Product Safety Act (''CPSA''), 15 U.S.C. 2063(a)(2) (available at *http://www.cpsc.gov/cpsia.pdf*), as amended by section 102 of the CPSIA, requires manufacturers and private labelers of children's products (such as baby-walkers) that are subject to a children's product safety rule to submit sufficient samples of the children's product, or samples that are identical in all material respects to the product, to an accredited third party conformity assessment body to be tested for compliance with any applicable children's product safety rule. (''Children's product safety rule'' is defined at 15 U.S.C. 2063(f)(1). See also 15 U.S.C. 2052(a)(5), 2052(a)(6).) For the purposes of the CPSA, the term ''manufacturer'' includes an importer. 15 U.S.C. 2052(a)(11).

The Commission has issued regulations at 16 CFR part 1110 concerning the content of certificates of compliance and limiting the parties who must issue such certificates to the United States importer and, in the case of domestically produced products, the United States manufacturer. Based on such testing, the manufacturer and private labeler must issue a certificate stating that such children's product complies with the children's product safety rule based on the assessment of a third party conformity assessment body accredited to conduct such tests. (Products, other than children's products, that are subject to a consumer product safety rule also are subject to testing and certification requirements. 15 U.S.C. 2063(a)(1).) The certification also must be based on a reasonable testing program or a test of each product. For these products, however, the tests are not required to be conducted by an accredited third party conformity assessment body.

Unless stayed by the Commission, these requirements apply to any such children's product that is manufactured more than 90 days after the Commission has established and published a notice of the requirements for accreditation of third party conformity assessment bodies to assess conformity with any children's product safety rule to which such children's product is subject. Section 14(a)(3) of the CPSA, 15 U.S.C. 2063(a)(3).

Section 14(a)(3) of the CPSA also provides a schedule for the dates by which the Commission must publish the notices of the requirements for accreditation of third party conformity assessment bodies for various children's products. For ''baby bouncers, walkers, and jumpers,'' the statute specified that the Commission publish a notice of the requirements for accreditation of third party conformity assessment bodies ''to assess conformity with parts 1500.18(a)(6) and 1500.86(a)'' and that such publication occur not later than 210 days after the date of enactment of the CPSIA, or March 12, 2009. The proposed rule, if finalized, would revoke 16 CFR 1500.18(a)(6) and 1500.86(a) and, as a result, make it unproductive to issue a notice of requirements that references those regulations. Furthermore, the requirement for the testing and certification of many products, including baby-walkers, has been stayed by the Commission until Feb. 10, 2010, at which time the Commission will vote on whether to terminate the stay. 74 FR 6396 (Feb. 9, 2009). By then, as noted above in part B of this preamble, the Commission intends to develop an up-to-date mandatory standard to which baby walkers can be tested and certified.

D. Discussion

As can be seen from the information presented above in part A.2 of this preamble, the Commission's current requirements for baby-walkers are outdated and are not based on the most recent anthropometric data. This unduly restricts the design choices available to the manufacturers of baby walkers without providing any additional safety. Furthermore, the current voluntary standard not only deals adequately with the hazards addressed by the Commission's regulation but also covers other major hazards, such as falls down stairs, associated with the product.

CPSC staff reviewed the existing baby-walker regulation in 2006 as part of the

Program for Systematic Review of Commission Regulations and recommended that a project be undertaken to consider revoking the regulations on baby-walkers. (Memorandum to Jacqueline Elder, Assistant Executive Director, Office of Hazard Identification and Reduction, from Patricia Hackett, Division of Mechanical Engineering, dated April, 24, 2007.)

As discussed above in part B of this preamble, the Commission intends to issue a new mandatory standard for baby walkers in the next year. The new standard is likely to address the stair-fall hazard and be largely based on the current voluntary standard. As noted in part C of this preamble, after the current stay of testing and certification requirements for many products, including baby walkers, is terminated (on or after Feb. 10, 2010), children's products subject to a mandatory standard will have to be tested by a third party conformity assessment body and certified as complying with the standard. The anticipated new mandatory standard probably will not issue until shortly before or even after Feb. 10, 2010. As that date approaches, notwithstanding the absence of a notice of requirements for baby walkers, if the current mandatory standard is still in place and a rule to revoke it has not been issued, the manufacturers of baby walkers may be uncertain as to what requirements they should certify to after the stay is terminated. To avoid this uncertainty and any associated expense to the industry or conformity assessment bodies, the Commission is proposing to revoke its regulations pertaining to baby-walkers and proposing that any final rule revoking those regulations will become effective on the date of termination of the stay of the testing and certification requirements for baby walkers or upon the effective date of the new mandatory standard to be developed, whichever occurs first. In the meantime, CPSC's staff will encourage baby walker manufacturers to comply with the voluntary standard.

E. Questions Pertaining to the Products Covered by 16 CFR 1500.18(a)(6) and 1500.86(a) and ASTM's Standards

The Commission notes that there may be some question as to whether there are products that arguably fall within 16 CFR 1500.18(a)(6) and 1500.86(a), but not within any ASTM standard. A possible example of this might be jumpers that affix to door frames, as discussed earlier in part A.2 of this preamble.

Additionally, there may be some question about whether the regulations afford some protections that the ASTM standards do not. For example, if one concluded that certain jumpers are covered by the regulations, but not by ASTM standards, one might assert that the regulations need to be retained to cover such products.

Therefore, the Commission specifically invites comments on: (1) Whether there are products that are covered by 16 CFR 1500.18(a)(6) and 1500.86(a), but not by any ASTM voluntary standard; (2) whether retention of CPSC's current regulations for those specific products is warranted; and (3) whether there are specific requirements in 16 CFR 1500.18(a)(6) and 1500.86(a), but not in any ASTM standard, that warrant retention. Identification of the specific product(s) and requirement(s) would be particularly helpful.

F. Paperwork Reduction Act

This proposed rule would not impose any information collection requirements. Accordingly, this rule is not subject to the Paperwork Reduction Act, 44 U.S.C. 3501–3520.

G. Environmental Considerations

This proposed rule falls within the scope of the Commission's environmental review regulation at 16 CFR 1021.5(c)(1), which provides a categorical exclusion from any requirement for the agency to prepare an environmental assessment or environmental impact statement for rules that revoke product safety standards.

H. Effective Date

The Commission proposes that a final rule to revoke 16 CFR 1500.18(a)(6) and 1500.86(a) become effective on the date of termination of the stay of the testing and certification requirements originally announced in the **Federal Register** of February 9, 2009 (74 FR 6396), or upon the effective date of the new mandatory standard to be developed, whichever occurs first. If necessary, the revocation could become effective immediately upon its date of publication in the **Federal Register**. Section 553(d) of the Administrative Procedure Act (''APA'') excludes certain final rules from the otherwise applicable APA requirement that the effective date of a rule be at least 30 days after the rule is published. 5 U.S.C. 553(d). One such exclusion is for a rule that relieves a restriction. Because the proposed rule would, if finalized, relieve certain restrictions for baby-bouncers, walker-jumpers, and baby-walkers, a delayed effective date would not be necessary.

I. References

1. ASTM voluntary standard F977–07, *Standard Consumer Safety Specification for Infant Walkers.*
2. Memorandum from P. Edwards, Project Manager, to the Commission, ''Notice of Proposed Rulemaking—Recommending the Revocation of CPSC Regulation for Baby Bouncers, Walker-Jumpers, and Baby-Walkers, 16 CFR 1500.18(a)(6) and 1500.86(a)(4),'' dated Aug. 14, 2009.
3. Snyder, R. G., Spencer, M. L., Owings, C. L. & Schneider, L. W. (1975), *Physical Characteristics of Children As Related to Death and Injury for Consumer Product Design and Use, Prepared for the Consumer Product Safety Commission (UM–HSRI–BI–75–5 Final Report Contract FDA–72–70 May 1975),* Highway Safety Research Institute, The University of Michigan, May 31, 1975 ''available on the Internet at *http://www.itl.nist.gov/iaui/ovrt/projects/anthrokids/*''.
4. ASTM voluntary standard F2012, *Standard Consumer Safety Performance Specifications for Stationary Activity Centers.*
5. ASTM voluntary standard F2167, *Standard Consumer Safety Specification for Infant Bouncer Seats.*
6. Memorandum to Jacqueline Elder, Assistant Executive Director, Office of Hazard Identification and Reduction, from Patricia Hackett, Division of Mechanical Engineering, ''Regulatory Review of CPSC Regulation for Baby Bouncers, Walker-Jumpers, and Baby-Walkers, 16 CFR 1500.18(a)(6) and 1500.86(a)(4),'' dated April, 24, 2007.
7. 36 FR 7255–56 (April 16, 1971).
8. 36 FR 21809–10 (Nov. 16, 1971).
9. 73 FR 68328 (Nov. 18, 2008).
10. 74 FR 6396 (Feb. 9, 2009).

List of Subjects in 16 CFR Part 1500

Consumer protection, Hazardous substances, Imports, Infants and children, Labeling, Law enforcement, Reporting and recordkeeping requirements, Toys.

For the reasons stated above, and under the authority of 15 U.S.C. 1261–1262 and 5 U.S.C. 553, the Consumer Product Safety Commission proposes to amend 16 CFR part 1500 as follows:

PART 1500—HAZARDOUS SUBSTANCES AND ARTICLES; ADMINISTRATION AND ENFORCEMENT REGULATIONS

1. The authority citation for 16 CFR part 1500 continues to read as follows:

Authority: 15 U.S.C. 1261–1278.

§ 1500.18 [Amended]

2. Section 1500.18 is amended by removing and reserving paragraph (a)(6).

§ 1500.86 [Amended]

3. Section 1500.86 is amended by removing and reserving paragraph (a)(4).

Dated: August 25, 2009.

Todd Stevenson,

Secretary, U.S. Consumer Product Safety Commission.

[FR Doc. E9–20945 Filed 9–2–09; 8:45 am]

BILLING CODE 6355–01–P

CONSUMER PRODUCT SAFETY COMMISSION

16 CFR Part 1215

[CPSC Docket No. CPSC–2009–0064]

Safety Standard for Infant Bath Seats

AGENCY: Consumer Product Safety Commission.

ACTION: Notice of proposed rulemaking.

SUMMARY: Section 104(b) of the Consumer Product Safety Improvement Act of 2008 (''CPSIA'') requires the United States Consumer Product Safety Commission (''Commission'') to promulgate consumer product safety standards for durable infant or toddler products. These standards are to be ''substantially the same as'' applicable voluntary standards or more stringent than the voluntary standard if the Commission concludes that more stringent requirements would further reduce the risk of injury associated with the product. The Commission is proposing a safety standard for infant bath seats in response to the direction under section 104(b) of the CPSIA.

DATES: Written comments must be received by November 17, 2009.

ADDRESSES: You may submit comments, identified by Docket No. CPSC–2009–0064, by any of the following methods:

Electronic Submissions

Submit electronic comments in the following way:

Federal eRulemaking Portal: http://www.regulations.gov. Follow the instructions for submitting comments. To ensure timely processing of comments, the Commission is no longer accepting comments submitted by electronic mail (e-mail) except through *http://www.regulations.gov.*

Written Submissions

Submit written submissions in the following way:

Mail/Hand delivery/Courier (for paper, disk, or CD–ROM submissions), preferably in five copies, to: Office of the Secretary, Consumer Product Safety Commission, Room 502, 4330 East West Highway, Bethesda, MD 20814; telephone (301) 504–7923.

Instructions: All submissions received must include the agency name and docket number for this rulemaking. All comments received may be posted without change, including any personal identifiers, contact information, or other personal information provided, to *http://www.regulations.gov.* Do not submit confidential business information, trade secret information, or other sensitive or protected information electronically. Such information should be submitted in writing.

Docket: For access to the docket to read background documents or comments received, go to *http://www.regulations.gov.*

FOR FURTHER INFORMATION CONTACT: Patricia Edwards, Project Manager, Directorate for Engineering Sciences, Consumer Product Safety Commission, 4330 East West Highway, Bethesda, MD 20814; telephone (301) 504–7577; *pedwards@cpsc.gov.*

SUPPLEMENTARY INFORMATION:

A. Background and Statutory Authority

1. The Consumer Product Safety Improvement Act

The Consumer Product Safety Improvement Act of 2008 (''CPSIA,'' Pub. L. 110–314) was enacted on August 14, 2008. Section 104(b) of the CPSIA requires the Commission to promulgate consumer product safety standards for durable infant or toddler products. These standards are to be ''substantially the same as'' applicable voluntary standards or more stringent than the voluntary standard if the Commission concludes that more stringent requirements would further reduce the risk of injury associated with the product. Section 104(b)(2) of the CPSIA directs the Commission to begin rulemaking for two standards by August 14, 2009. In this document the Commission proposes a safety standard for bath seats. The proposed standard is substantially the same as a voluntary standard developed by ASTM International (formerly known as the American Society for Testing and Materials), ASTM F 1967–08a, ''Standard Consumer Safety Specifications for Infant Bath Seats,'' but the Commission is proposing some modifications to strengthen the standard.

2. Previous Commission Rulemaking Concerning Bath Seats

The Commission has been engaged in regulatory efforts for infant bath seats for several years. In July 2000, several consumer organizations petitioned the Commission to ban bath seats under the Federal Hazardous Substances Act (''FHSA''). The consumer organizations asserted that bath seats presented an unreasonable risk of injury and death due to drowning. On August 1, 2001, the Commission published an advance notice of proposed rulemaking (''ANPR'') in the **Federal Register** initiating a rulemaking proceeding on bath seats (66 FR 39692). The Commission issued a notice of proposed rulemaking that was published in the **Federal Register** on December 29, 2003 (68 FR 74878) proposing requirements for stability, leg openings, and warnings. Elsewhere in this issue of the **Federal Register**, the Commission has issued a notice that the Commission has terminated the bath seat rulemaking proceeding that it began under the FHSA because it has been superseded by this rulemaking required under section 104(b) of the CPSIA.

B. The Product

Infant bath seats are used in a tub or sink to support a seated infant while he or she is being bathed. They are marketed for use with infants between the age of approximately 5 months (the time at which infants can sit up unassisted) to the age of approximately 10 months (the time at which infants begin pulling themselves up to a standing position). Currently, there are three manufacturers and one importer of bath seats active in the United States. All are members of the Juvenile Products Manufacturers Association (''JPMA''), which is the major United States trade association representing juvenile product manufacturers and importers. All produce a variety of children's products in addition to bath seats.

The exact number of bath seats currently sold or in use is not known. A 2005 survey by the American Baby Group indicated annual sales of bath seats of about 1.5 million and about 1.7 million bath seats in use. In 2000, JPMA estimated annual sales of bath seats at about one million and estimated up to 2 million bath seats in use for infants under one year of age.

C. ASTM Voluntary Standard

ASTM F 1967, *Standard Consumer Safety Specification for Infant Bath Seats,* was first published in 1999. Between 2003 and 2007, the ASTM standard was subsequently revised several times to include requirements that the Commission proposed in its 2003 NPR and to exclude tub-like products.

In response to changes in the ASTM standard, product design changed significantly. The new designs use an arm that clamps onto the side of the

bath tub rather than relying on suction cups for stability. The current voluntary standard for bath seats, ASTM F 1967–08a, was published in December 2008. The current version contains the same labeling, stability and leg opening requirements as the 2007 version.

JPMA provides certification programs for juvenile products, including bath seats. Manufacturers submit their products to an independent test laboratory to test the product for conformance to the ASTM standard. Currently only one bath seat model is certified to ASTM F 1967–08a.

The current ASTM standard includes performance requirements specific to bath seats to address the hazards of the bath seat tipping over or the child becoming entrapped and/or submerged in the leg openings. The standard also contains labeling requirements to address the child coming out of the bath seat.

General requirements in the current ASTM standard, none of which the Commission is proposing to modify, include:

- Requiring compliance with CPSC's standards concerning sharp points and edges, small parts, and lead paint (16 CFR parts 1303, 1500.48, 1500.49, 1500.50, 1500.51, and 1501);
- Requirements for latching and locking mechanisms;
- Requirements to prevent scissoring, shearing and pinching;
- Entrapment testing for accessible holes and openings;
- Torque/tension test for graspable components; and
- A requirement that warning labels be permanent.

The ASTM Standard's requirements specifically related to hazards posed by bath seats (some of which the Commission is proposing to modify as discussed in part E of this preamble) include:

- Test for stability performed on a test platform containing both a slip resistant surface and a smooth surface to test whether the bath seat may tip over during use;
- Requirements for restraint systems requiring passive crotch restraint to prevent a child from sliding through front or sides of the seat;
- Static load test to test whether the bath seat may break or become damaged during use;
- A requirement that suction cups (if used) adhere to the bath seat and the surface;
- A leg opening requirement to prevent children from sliding through these openings;
- A leg opening requirement restricting the expansiveness of the seating area to prevent the child from slumping and becoming entrapped in a reclined position; and
- Requirements for warning labels and instruction manual.

D. Incident Data

From 1983 through 2008, there were 295 non-fatal bath seat incidents reported to CPSC staff. A submersion hazard was identified in 151 of these non-fatal incidents of which 116 were actual submersion incidents. (Submersion is defined as the act of placing, or the condition of being, under water. A submersion hazard indicates that submersion is possible, as a direct result of the incident. An actual submersion is when the victim actually became submerged as a result of the incident.) The remaining 143 reports were non-submersion hazards such as lacerations, limb entrapments, etc. There have been 171 reported fatalities involving bath seats for this same time frame, although more fatalities may have occurred because fatality reporting is not considered to be complete for 2006, 2007, and 2008. All of these fatalities were submersions. None of the identifiable products involved in the fatal bath seat incidents were certified to meet ASTM F 1967–08a or its predecessor, ASTM F 1967–07. Two of the non-fatal incidents involved products certified to ASTM F 1967–07, neither of which were submersion hazards, thus were not life threatening.

Of the 171 fatal incidents, 20 involved products that were identified as being certified to the 2004 version of the ASTM standard. Two of the 20 were due to the arm of the bath seat disengaging from the bath tub and 17 were due to other causes such as the child slumped over the side of the bath seat (four incidents), children found out of the bath seat in the water (seven incidents), miscellaneous causes, such as consumers not attaching the clamp to the tub side (four incidents), and overflowing bathtubs (two incidents). There was also an unknown cause for one incident.

Fifty-one of the non-fatal incidents involved bath seats certified to the 2004 version of the ASTM voluntary standard. Fifteen of these non-fatal incidents involved a bath seat that was the subject of a safety alert issued in 2005 due to component failures occurring when the bath seat was installed on non-traditional tubs. Of the remaining 36 incidents, five were considered submersion hazards, and thus could have resulted in a fatality had a caregiver not been present. These five include three arm disengagements, one entrapment where the child's torso slipped completely into one leg opening, and one case where a child was found out of the bath seat in the water. In addition, there has been another recent torso entrapment incident reported to CPSC staff in 2009.

E. Assessment of Voluntary Standard ASTM F 1967–08a and Description of Proposed Changes and the Proposed Rule

1. Section 104(b) of the CPSIA: Consultation and CPSC Staff Review

Section 104(b) of the CPSIA requires the Commission to assess the effectiveness of the voluntary standard in consultation with representatives of consumer groups, juvenile product manufacturers and other experts. This consultation process began in October 2008 during the ASTM subcommittee meeting regarding the ASTM infant bath seat voluntary standard. Consultations between Commission staff and members of this subcommittee are still ongoing.

The Commission has reviewed the incident data and the ASTM F 1967–08a standard and conducted testing on bath seats to assess the ASTM standard. CPSC staff tested three products to the current version of ASTM F 1967–08a: Two bath seats that use only suction cups to provide stability and a third that primarily uses a clamping mechanism located on an arm that secures the bath seat to the side of the tub. The bath seat with the arm was labeled as being certified by JPMA to the ASTM standard.

Initial testing results indicated that all three products failed the stability test requirements in ASTM F 1967–08a. The two non-certified seats that use only suction cups for stability could not affix themselves to the slip-resistant surface, and thus failed.

During the testing of the JPMA certified bath seat, the arm rest of the clamping mechanism lifted up from the top surface of the side of the tub. The clamp did not disengage from the tub, but the arm rest contact points were no longer in contact with the tub surface. The bath seat remained in a tilted position from the installed and presumed ''manufacturer's intended use position.'' A strict interpretation of the pass-fail criteria suggests that this bath seat, as tested by CPSC staff, also does not meet the standard, but the clamp, while not in the initial position, remained clamped to the side of the bath tub. Thus, one could assert that, because the product did not tip over and did not disengage from the platform, the product complied with the standard. This result indicates that the pass/fail criteria are ambiguous and could result

in passing a bath seat that could nevertheless pose a stability hazard to an infant.

The current ASTM standard requires that a soapy test solution ''thoroughly saturate the coverage area'' which is defined in the ASTM standard as any internal surface of the tub well or tub bottom that makes contact with the product. Staff found that spraying the soap solution on the top and outer surface contact points as well as the interior surfaces affected the final position of the bath seat and therefore could affect the results of the test.

Consistent with section 104(b) of the CPSIA, the Commission, through this proposed rule, would establish a new 16 CFR part 1215, ''Safety Standard for Bath Seats.'' The new part would incorporate by reference the requirements for bath seats in ASTM F 1967–08a with certain changes to specific provisions to strengthen the ASTM standard as discussed below.

2. Proposed Changes to the ASTM Standard's Requirements

While most of the requirements of the current ASTM standard are sufficient to reduce the risk of injury posed by bath seats, the Commission concludes that several provisions should be modified to make them more stringent and further reduce the risk of injury and to clarify the test procedures.

To best understand the proposed standard, it is helpful to view the current ASTM F 1967–08a standard for bath seats at the same time as the Commission's proposed modifications. The ASTM standard is available for viewing for this purpose during the comment period through this link: *http://www.astm.org/cpsc.htm*.

a. Definition of Bath Seat (Proposed § 1215.2(b)(1))

The Commission's 2003 NPR defined a bath seat as an article that is used in a bath tub, sink, or similar bathing enclosure and that provides support, at a minimum, to the front and back of a seated infant during bathing by a caregiver. The Commission believes that this definition is preferable to that used by ASTM which does not define the type of support because the proposed definition better clarifies what is (or is not) a bath seat.

b. Stability Requirement

Limiting the tilt of the bath seat (proposed § 1215.2(b)(2), (6) and (7)). As discussed above, during testing the Commission staff found that the clamping mechanism on one bath seat lifted from the side of the tub and continued to tip backward when force was applied, but it did not tip over. To prevent possible misinterpretation of the ASTM standard's pass/fail criteria, the Commission proposes a requirement that limits the allowable tilt angle of the bath seat during the stability test. This proposed modification would be added to sections 6.1, between sections 7.4.2.2 and 7.4.2.3, and between sections 7.4.2.3 and 7.4.2.4 of the ASTM standard. The Commission proposes that a bath seat capable of tilting 12 degrees or more during testing be considered a failure. This limit was determined after measuring, and allowing for the flexibility of, current products. Staff also considered other ASTM standards such as those for infant bouncer seats and toys. These use a 10 degree table or tilt when testing stability. The Commission is proposing a tilt angle just above that level.

Test solution application (proposed § 1215.2(b)(4)). The Commission recognizes that the outside of a tub may become wet, and this may affect the ability of a bath seat's attachment arm to remain stable. Thus, the Commission proposes that a test solution be applied to all areas where the product may make contact while in use.

Measuring water levels (proposed § 1215.2(b)(5)). When testing the stability of bath seats, Commission staff noted that it can be difficult to obtain accurate water level measurements because the unoccupied bath seat may float when the test platform is flooded. To address this, the Commission proposes to add a clarifying statement: ''For the purpose of measuring the water level, the product's seating surface can be temporarily weighed down to prevent the seat from floating.''

c. Leg opening requirement (Proposed § 1215.2(b)(8) through (10))

In recent incident reports, children have fit both legs and their hips through a single leg hole of a bath seat that complies with the current ASTM standard. The torso probe specified in the current ASTM standard used to test the size of the leg openings is not sufficiently analogous to the human infant. This has resulted in a child's torso fitting through a leg hole when the ASTM torso probe does not. Because modeling the pliable features of a child's torso is not practical, the Commission proposes decreasing the size of the current rigid wood torso probe specified in the ASTM standard and specifying a larger radius on the corners. The proposal would decrease the length of the vertical and horizontal axes of the current probe by approximately 5% and round the corners more resulting in a 1.45″ radius rather than the current 1″ radius. This proposed change is accomplished through modifications to Figure 4 in the ASTM standard that shows the torso probe. The Commission believes that changes in the test probe would not restrict the utility of the product, but would still allow many possible designs for bath seats, even that which would accommodate large children.

An additional proposed change (at proposed § 1215.2(b)(8) and (9)) related to the torso probe concerns the ASTM standard's instruction in section 7.7.1 and 7.7.2 of the ASTM standard to insert the test probe ''* * * in the most adverse orientation into each opening.'' This language is open to interpretation as it may not always be intuitive what 'the most' adverse position is. Therefore, the Commission proposes changing this wording to say that the probe needs to be inserted ''in all orientations to determine if any position can create a slip through and/or entrapment hazard.''

d. Editorial and clarifying changes (proposed § 1215.2(b)(3) and (5))

Other proposed changes clarify the order of steps to be performed when conducting the stability test. For clarification of testing procedures, the Commission proposes re-ordering the steps specified in the ASTM standard for preparing the test surface and installing the bath seat. This change would clarify that the test platform should be flooded before installing the bath seat.

F. Request for Comments

The issuance of this proposed rule begins a rulemaking proceeding under section 104(b) of the CPSIA to issue a consumer product safety standard for infant bath seats. All interested persons are invited to submit comments on any aspect of the proposed rule. Comments should be submitted in accordance with the instructions in the **ADDRESSES** section at the beginning of this notice.

G. Effective Date

The Administrative Procedure Act (''APA'') generally requires that the effective date of a rule be at least 30 days after publication of the final rule. *Id.* 553(d). To allow time for bath seats to come into compliance, the Commission proposes that the standard would become effective six months after publication of a final rule.

H. Regulatory Flexibility Act

The Regulatory Flexibility Act (''RFA'') generally requires that agencies review proposed rules for their potential economic impact on small entities,

including small businesses. 5 U.S.C. 603.

Four firms currently market infant bath seats in the United States: A large domestic manufacturer, a small foreign manufacturer, a small domestic manufacturer, and a small domestic importer. All of these companies' bath seats are expected to require modifications to meet the proposed standard.

Modifying existing bath seats to meet the proposed standard would result in one-time product development costs and possible increased costs of production that could amount to approximately $5 to $10 per bath seat. A price increase associated with these modifications will likely reduce the quantity of bath seats demanded and hence unit sales. Alternatively, it is possible that manufacturers may not be able to (or may choose not to) produce a commercially viable bath seat that meets the proposed standard. For the small domestic manufacturer, the impact of discontinuing baby bath seat production is unlikely to be large since bath seats make up only a small portion of its juvenile products.

Since importers do not manufacture bath seats, the effect of the regulation on them would be felt indirectly, requiring a shift in suppliers rather than the design and production of a different product. The impact on the small domestic importer is expected to be small. The small domestic importer would most likely respond by discontinuing the import of its non-complying bath seat, either replacing the bath seat with a complying product or another juvenile product.

Hence, even if the cost of developing a compliant product proves to be a barrier for individual small firms, the loss of bath seats as a product category is expected to be minor and would likely be mitigated by increased sales of competing products, such as multi-stage infant bathtubs, or entirely different juvenile products.

I. Environmental Considerations

The Commission's regulations provide a categorical exemption for the Commission's rules from any requirement to prepare an environmental assessment or an environmental impact statement as they ''have little or no potential for affecting the human environment.'' 16 CFR 1021.5(c)(2). This proposed rule falls within the categorical exemption.

J. Paperwork Reduction Act

The Commission is not proposing any collections of information in this rulemaking. Therefore, the Paperwork Reduction Act, 44 U.S.C. 3501–3520, does not apply.

List of Subjects in 16 CFR Part 1215

Consumer protection, Imports, infants and children, Labeling, Law enforcement, and Toys.

Therefore, the Commission proposes to amend Title 16 of the Code of Federal Regulations by adding part 1215 to read as follows:

PART 1215—SAFETY STANDARD FOR BATH SEATS

Sec.

1215.1 Scope, application and effective date.
1215.2 Requirements for bath seats.

Authority: The Consumer Product Safety Improvement Act of 2008, Pub. L. 110–314, 104, 122 Stat. 3016 (August 14, 2008).

§ 1215.1 Scope.

This part 1215 establishes a consumer product safety standard for bath seats manufactured or imported on or after (date 6 months after date of publication of a final rule in the **Federal Register**).

§ 1215.2 Requirements for bath seats.

(a) Except as provided in paragraph (b) of this section, each bath seat shall comply with all applicable provisions of ASTM F 1967–08a, Standard Consumer Safety Specification for Infant Bath Seats, approved November 1, 2008. The Director of the Federal Register approves this incorporation by reference in accordance with 5 U.S.C. 552(a) and 1 CFR part 51. You may obtain a copy from ASTM International, 100 Bar Harbor Drive, P.O. Box 0700, West Conshohocken, PA 19428; *http://www.astm.org.* You may inspect a copy at the Office of the Secretary, U.S. Consumer Product Safety Commission, Room 502, 4330 East West Highway, Bethesda, MD 20814, telephone 301–504–7923, or at the National Archives and Records Administration (NARA). For information on the availability of this material at NARA, call 202–741–6030, or go to: *http://www.archives.gov/federal_register/code_of_federal_regulations/ibr_locations.html.*

(b) The following provisions replace, or are added to, the indicated sections of the ASTM F 1967–08a standard.

(1) *Instead of section 3.1.1:* ''*Bath seat, n*—an article that is used in a bath tub, sink, or similar bathing enclosure and that provides support, at a minimum, to the front and back of a seated infant during bathing by a caregiver. This does not include products that are designed or intended to retain water for bathing.''

(2) *Instead of section 6.1:* ''*Stability*—For bath seats which provide support for an occupant's back and support for the sides or front of the occupant, or both, the geometry and construction of the product shall not allow for any parts of the product to become separated from it, shall not sustain permanent damage, and shall not allow the product to tip over after being tested in accordance with 7.4. In addition, if any attachment point disengages from (is no longer in contact with) the test platform and then fails to return to its manufacturer's intended use position after being tested in accordance with 7.4, it fails the requirement. This test shall be conducted after the Mechanisms Durability test in 7.1.3. If any time during the application of force, the seat is no longer in the initial 'intended use position' and is tilted at an angle of 12 degrees or more from its initial starting position, it shall be considered a failure.''

(3) *Instead of section 7.4.1.2:* ''Prepare the test surface as follows:''

(4) *Instead of section 7.4.1.4:* ''Using a spray bottle containing a 1:25 mixture of test solution (*see* table Z) to distilled water, immediately before each test run, thoroughly saturate all test platform surfaces above the water line where the product makes contact and where contact might be expected.''

(5) *Instead of section 7.4.1.5:* ''Flood the test platform with clear water that is at an initial temperature of 100 to 105° F (37.8 to 10.6°C) and a depth of 2 in. (51 mm) above the highest point of the occupant seating surface. Install the product according to the manufacturer's instructions onto the test platform specified in 7.4.3. For the purpose of measuring the water level, the product's seating surface can be temporarily weighed down to prevent the seat from floating.''

(6) *Between section 7.4.2.2 and section 7.4.2.3:* ''Rigidly install an inclinometer to the test bar above the location where force is to be applied. The weight of the inclinometer and the fastening method shall be less than or equal to 2.2 pounds. The inclinometer shall have a measurement tolerance of less than or equal to 0.5 degrees. Measure and record the pre-test angle of the test bar.''

(7) *Between section 7.4.2.3 and section 7.4.2.4:* ''Measure and record the maximum angle of the test bar during the application of the 17.0 lbf load. Calculate the absolute value of the Change in Angle in degrees. Change in Angle = (Angle measured during test)—(Angle measured pre-test).''

(8) *Instead of section 7.7.1:* ''With the bath seat in each of the manufacturer's recommended use position(s), insert the tapered end of the Bath Seat Torso

Probe (*see* Fig. 4a) in all orientations into each opening. The probe should be inserted from the direction of the occupant seating surface. Gradually apply a force of 15 lbf (67 N) in the direction of the major axis of the probe within a period of 5s. Maintain this force for an additional 10s (*see* Fig. 5).''

(9) *Instead of section 7.7.2:* ''With the bath seat in each of the manufacturer's recommended use position(s), insert the tapered end of the Bath Seat Shoulder Probe (*see* Fig. 6) in all orientations into each opening. The probe should be inserted from the direction of the occupant seating surface. Gradually apply a force of 15 lbf (67 N) in the direction of the major axis of the probe within a period of 5s. Maintain this force for an additional 10s (*see* Fig. 7). Release and apply a force of 10 lbf (44 N) to the top 1.0-in. (25-mm) perimeter of the probe in a direction vertically downward toward the seating surface over a period of 5s. Maintain this force for an additional 10s (*see* Fig. 8).''

(10) *Instead of Figure 4:*

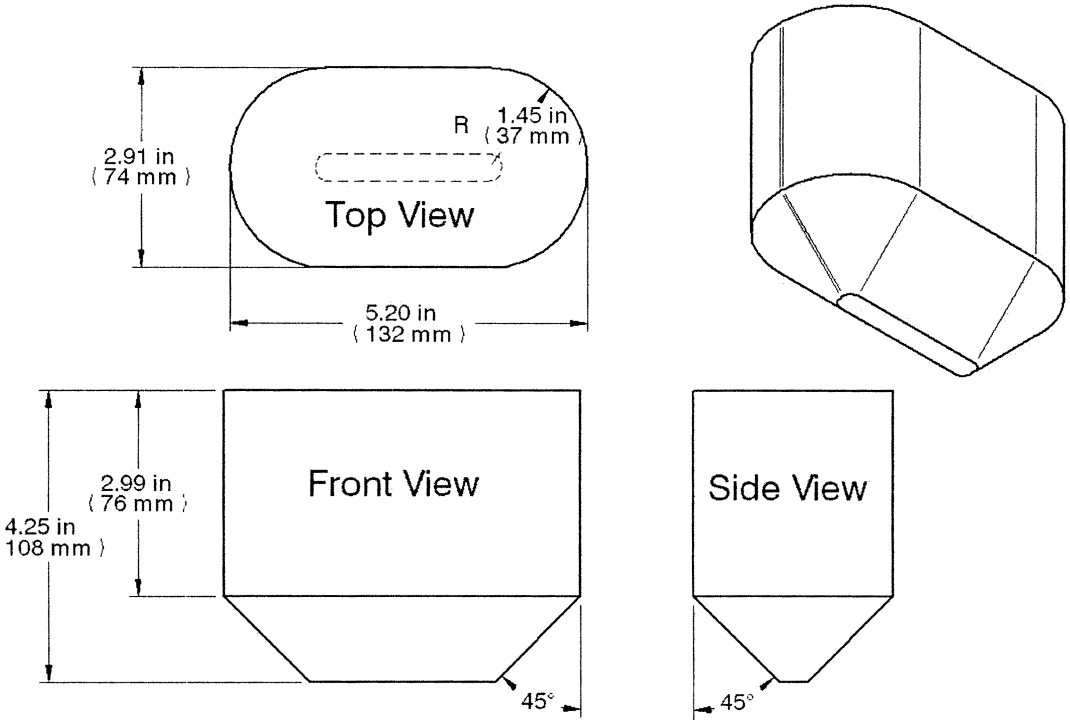

Figure 4a: Modified Bath Seat Torso Probe

Dated: August 25, 2009.

Todd Stevenson,

Secretary, U.S. Consumer Product Safety Commission.

[FR Doc. E9–20948 Filed 9–2–09; 8:45 am]

BILLING CODE 6355–01–P

CONSUMER PRODUCT SAFETY COMMISSION

16 CFR Part 1500

Infant Bath Seats: Termination of Rulemaking

AGENCY: Consumer Product Safety Commission.

ACTION: Termination of rulemaking.

SUMMARY: In the **Federal Register** of December 29, 2003 (68 FR 74878), the Consumer Product Safety Commission (''Commission'') published a notice of proposed rulemaking under the Federal Hazardous Substances Act (''FHSA'') to reduce the unreasonable risk of injury associated with bath seats. On August 14, 2008, the Consumer Product Safety Improvement Act of 2008 (''CPSIA'') was enacted. Section 104(b) of the CPSIA requires the Commission to promulgate consumer product safety standards for durable infant or toddler products, which are to be ''substantially the same as'' applicable voluntary standards (or more stringent requirements if they would further reduce the risk of injury associated with the product). Elsewhere in this issue of the **Federal Register,** the Commission is proposing a safety standard for infant bath seats in response to section 104(b) of the CPSIA. The rulemaking initiated under the FHSA is superseded by section 104(b) of the CPSIA. Accordingly, the Commission has terminated the infant bath seat rulemaking initiated under the FHSA.

FOR FURTHER INFORMATION CONTACT: Patricia Edwards, Project Manager, Directorate for Engineering Sciences, Consumer Product Safety Commission, 4330 East West Highway, Bethesda, MD 20814; telephone (301) 504–7577; *pedwards@cpsc.gov*.

SUPPLEMENTARY INFORMATION:

A. The Product

Infant bath seats are used in a tub or sink to support a seated infant while he or she is being bathed. They are marketed for use with infants from the time they can sit up unassisted (about 5 months) to the time they begin pulling themselves up to a standing position (about 10 months).

B. Rulemaking Pursuant to the Federal Hazardous Substances Act (FHSA)

In response to a petition from the Consumer Federation of America and others in 2000, in the **Federal Register**

of August 1, 2001, the Commission published an advance notice of proposed rulemaking (''ANPR'') (66 FR 39692) to begin a rulemaking proceeding concerning infant bath seats under the Federal Hazardous Substances Act (''FHSA''). On December 29, 2003, the Commission published a notice of proposed rulemaking (''NPR'') (68 FR 74878) proposing that bath seats meet specified requirements for stability, leg openings and labeling.

C. The Consumer Product Safety Improvement Act

The Consumer Product Safety Improvement Act of 2008 (''CPSIA'', Pub. L. 110–314) was enacted on August 14, 2008. Section 104(b) of the CPSIA requires the Commission to promulgate consumer product safety standards for durable infant or toddler products. These standards are to be ''substantially the same as'' applicable voluntary standards or more stringent than the voluntary standard if the Commission concludes that more stringent requirements would further reduce the risk of injury associated with the product. Section 104(b)(2) of the CPSIA directs the Commission to begin rulemaking for two standards by August 14, 2009. Elsewhere in this issue of the **Federal Register**, the Commission is issuing a proposed rule that would establish a safety standard for bath seats that is substantially the same as a voluntary standard developed by the American Society for Testing and Materials and designated as ASTM F 1967–08a, ''Standard Consumer Safety Specification for Infant Bath Seats,'' with some modifications to strengthen the ASTM standard.

D. Termination of the FHSA Rulemaking

The direction in section 104(b) of the CPSIA to the Commission to begin rulemaking for durable infant or toddler products, including bath seats, supersedes the bath seat rulemaking that the Commission began under the FHSA. Therefore, the Commission is terminating the FHSA bath seat proceeding that began on August 1, 2001 with the issuance of an ANPR.

Dated: August 25, 2009.

Todd Stevenson,

Secretary, U.S. Consumer Product Safety Commission.

[FR Doc. E9–20947 Filed 9–2–09; 8:45 am]

BILLING CODE 6355–01–P

Federal Register

Thursday,
September 3, 2009

Part IV

The President

Proclamation 8407—National Ovarian Cancer Awareness Month, 2009

Proclamation 8408—National Prostate Cancer Awareness Month, 2009

Federal Register
Vol. 74, No. 170
Thursday, September 3, 2009

Presidential Documents

Title 3—

The President

Proclamation 8407 of August 31, 2009

National Ovarian Cancer Awareness Month, 2009

By the President of the United States of America

A Proclamation

Ovarian cancer remains the leading cause of death from gynecologic cancer among women in the United States. Every year, thousands are diagnosed and go on to fight the disease with grace and dignity. National Ovarian Cancer Awareness Month honors all those affected by this cancer and renews our commitment to fighting an illness that takes the lives of too many in our Nation.

Women are often diagnosed with ovarian cancer when it is already at an advanced stage. This problem can be attributed to a lack of effective early detection technologies and minimal or no specific symptoms associated with the disease. By learning more about risk factors and maintaining regular physician consultations, women have their best chance of early detection of ovarian cancer.

Science continues to expand our knowledge about this illness, promising hope to those who, years ago, would be without it. Through dedicated research, treatment outcomes have improved for many, and we are building a foundation for the development of evidence-based screening, which can help diagnose the disease at the earliest possible stage when the likelihood of cure is high.

This month we recommit to supporting the women who continue to battle valiantly against this malady as well as all families who are affected. National Ovarian Cancer Awareness Month helps educate women and men about the importance of knowing common signs and symptoms, scheduling routine doctor visits, and continuing robust scientific research. As a Nation, we are united in our resolve to reduce incidence and improve the lives of all those affected.

NOW, THEREFORE, I, BARACK OBAMA, President of the United States of America, by virtue of the authority vested in me by the Constitution and laws of the United States, do hereby proclaim September 2009 as National Ovarian Cancer Awareness Month. I encourage citizens, Government agencies, private businesses, nonprofit organizations, and other interested groups to join in activities that will increase awareness of what Americans can do to prevent and control ovarian cancer.

IN WITNESS WHEREOF, I have hereunto set my hand this thirty-first day of August, in the year of our Lord two thousand nine, and of the Independence of the United States of America the two hundred and thirty-fourth.

[FR Doc. E9–21501
Filed 9–2–09; 11:15 am]
Billing code 3195–W9–P

Presidential Documents

Proclamation 8408 of August 31, 2009

National Prostate Cancer Awareness Month, 2009

By the President of the United States of America

A Proclamation

As a Nation, we have made significant progress in the fight against prostate cancer. Over the last decade, prostate cancer mortality rates have fallen substantially. Yet, despite this progress, among men in the United States prostate cancer remains the most commonly diagnosed cancer and the second leading cause of cancer deaths. One in six men in this country will be diagnosed with prostate cancer. National Prostate Cancer Awareness Month is an opportunity to renew our commitment to find better ways to prevent, detect, and control this disease.

Prostate cancer affects both those stricken with the disease and their families, often occurring when they least expect it. The cancer does not discriminate among husbands, fathers, brothers, and sons, and it does not differentiate on race, age, or income. Americans of every background know its dangers. Families share in the struggles of prostate cancer, bearing the emotional and financial concerns along with the afflicted.

My Administration supports prevention efforts and research to develop better screening tests, uncover more effective treatments, and ensure quality care for all who are diagnosed with this illness. We must ensure that more men are educated about all aspects of the disease including prevention, early detection and possible treatment options. To expand our knowledge of this cancer, the National Institutes of Health, the Department of Defense, and the Centers for Disease Control and Prevention are playing leading roles in research. Their work is helping to reduce the burden of prostate cancer and save lives for generations to come.

This month, we remember the lives we have lost, and we recommit ourselves to supporting those currently battling against the disease. National Prostate Cancer Awareness Month also highlights the great medical advancements we have made and reminds us there is still much work to be done. As a Nation, we are united in our resolve to reduce incidence of prostate cancer and improve the lives of all those affected.

NOW, THEREFORE, I, BARACK OBAMA, President of the United States of America, by virtue of the authority vested in me by the Constitution and laws of the United States, do hereby proclaim September 2009 as National Prostate Cancer Awareness Month. I encourage citizens, Government agencies, private businesses, nonprofit organizations, and other interested groups to join in activities that will increase awareness of what Americans can do to prevent and control prostate cancer.

IN WITNESS WHEREOF, I have hereunto set my hand this thirty-first day of August, in the year of our Lord two thousand nine, and of the Independence of the United States of America the two hundred and thirty-fourth.

[FR Doc. E9–21502
Filed 9–2–09; 11:15 am]
Billing code 3195–W9–P

Reader Aids

Federal Register

Vol. 74, No. 170

Thursday, September 3, 2009

CUSTOMER SERVICE AND INFORMATION

Federal Register/Code of Federal Regulations	
General Information, indexes and other finding aids	**202–741–6000**
Laws	**741–6000**
Presidential Documents	
Executive orders and proclamations	**741–6000**
The United States Government Manual	**741–6000**
Other Services	
Electronic and on-line services (voice)	**741–6020**
Privacy Act Compilation	**741–6064**
Public Laws Update Service (numbers, dates, etc.)	**741–6043**
TTY for the deaf-and-hard-of-hearing	**741–6086**

ELECTRONIC RESEARCH

World Wide Web

Full text of the daily Federal Register, CFR and other publications is located at: **http://www.gpoaccess.gov/nara/index.html**

Federal Register information and research tools, including Public Inspection List, indexes, and links to GPO Access are located at: **http://www.archives.gov/federal__register**

E-mail

FEDREGTOC-L (Federal Register Table of Contents LISTSERV) is an open e-mail service that provides subscribers with a digital form of the Federal Register Table of Contents. The digital form of the Federal Register Table of Contents includes HTML and PDF links to the full text of each document.

To join or leave, go to **http://listserv.access.gpo.gov** and select *Online mailing list archives, FEDREGTOC-L, Join or leave the list (or change settings);* then follow the instructions.

PENS (Public Law Electronic Notification Service) is an e-mail service that notifies subscribers of recently enacted laws.

To subscribe, go to **http://listserv.gsa.gov/archives/publaws-l.html** and select *Join or leave the list (or change settings);* then follow the instructions.

FEDREGTOC-L and **PENS** are mailing lists only. We cannot respond to specific inquiries.

Reference questions. Send questions and comments about the Federal Register system to: **fedreg.info@nara.gov**

The Federal Register staff cannot interpret specific documents or regulations.

Reminders. Effective January 1, 2009, the Reminders, including Rules Going Into Effect and Comments Due Next Week, no longer appear in the Reader Aids section of the Federal Register. This information can be found online at **http://www.regulations.gov.**

CFR Checklist. Effective January 1, 2009, the CFR Checklist no longer appears in the Federal Register. This information can be found online at **http://bookstore.gpo.gov/.**

FEDERAL REGISTER PAGES AND DATE, SEPTEMBER

45093–45304 1
45305–45534 2
45535–45730 3

CFR PARTS AFFECTED DURING SEPTEMBER

At the end of each month, the Office of the Federal Register publishes separately a List of CFR Sections Affected (LSA), which lists parts and sections affected by documents published since the revision date of each title.

3 CFR

Proclamations:
8404 45527
8405 45529
8406 45535
8407 45727
8408 45729
Administrative Orders:
Memorandums:
Memorandum of August 31, 2009 45533

7 CFR

210 45305
220 45305
402 45537
407 45537
457 45537
Proposed Rules:
970 45565

10 CFR

55 45544
76 45544

12 CFR

370 45093

14 CFR

1 45307
23 45100
25 45546
33 45307
39 ..... 45311, 45550
71 ..... 45553, 45554
Proposed Rules:
23 45133
39 ..... 45135, 45139, 45381
71 ..... 45142, 45574, 45575

15 CFR

909 45555
Proposed Rules:
806 45383

16 CFR

1119 45101
Proposed Rules:
1119 45133
1215 45719
1216 45704
1500 ..... 45714, 45723

18 CFR

Proposed Rules:
284 45576

20 CFR

655 45560

22 CFR

Proposed Rules:
62 45385

24 CFR

206 45311

29 CFR

1956 45107

30 CFR

944 45116

33 CFR

151 45555
165 ..... 45120, 45318, 45323

39 CFR

111 45325
3020 45327

40 CFR

52 45561
180 45330
300 45335
Proposed Rules:
52 ..... 45387, 45578
81 45387

44 CFR

64 45122

47 CFR

73 45126
74 45126

48 CFR

Proposed Rules:
8 45394
9 45579
12 ..... 45394, 45579
15 45394
42 45394
49 45394
52 45579

49 CFR

234 45336
Proposed Rules:
367 45583
571 45143

50 CFR

20 45343
32 45674
226 45353
648 45131
679 ..... 45131, 45378, 45379, 45564
Proposed Rules:
17 45396
648 45597

LIST OF PUBLIC LAWS

This is a continuing list of public bills from the current session of Congress which have become Federal laws. It may be used in conjunction with ''P L U S'' (Public Laws Update Service) on 202–741–6043. This list is also available online at *http://www.archives.gov/federal-register/laws.html*.

The text of laws is not published in the **Federal Register** but may be ordered in ''slip law'' (individual pamphlet) form from the Superintendent of Documents, U.S. Government Printing Office, Washington, DC 20402 (phone, 202–512–1808). The text will also be made available on the Internet from GPO Access at *http://www.gpoaccess.gov/plaws/index.html*. Some laws may not yet be available.

H.R. 774/P.L. 111–50

To designate the facility of the United States Postal Service located at 46-02 21st Street in Long Island City, New York, as the ''Geraldine Ferraro Post Office Building''. (Aug. 19, 2009; 123 Stat. 1979)

H.R. 987/P.L. 111–51

To designate the facility of the United States Postal Service located at 601 8th Street in Freedom, Pennsylvania, as the ''John Scott Challis, Jr. Post Office''. (Aug. 19, 2009; 123 Stat. 1980)

H.R. 1271/P.L. 111–52

To designate the facility of the United States Postal Service located at 2351 West Atlantic Boulevard in Pompano Beach, Florida, as the ''Elijah Pat Larkins Post Office Building''. (Aug. 19, 2009; 123 Stat. 1981)

H.R. 1275/P.L. 111–53

Utah Recreational Land Exchange Act of 2009 (Aug. 19, 2009; 123 Stat. 1982)

H.R. 1397/P.L. 111–54

To designate the facility of the United States Postal Service located at 41 Purdy Avenue in Rye, New York, as the ''Caroline O'Day Post Office Building''. (Aug. 19, 2009; 123 Stat. 1989)

H.R. 2090/P.L. 111–55

To designate the facility of the United States Postal Service located at 431 State Street in Ogdensburg, New York, as the ''Frederic Remington Post Office Building''. (Aug. 19, 2009; 123 Stat. 1990)

H.R. 2162/P.L. 111–56

To designate the facility of the United States Postal Service located at 123 11th Avenue South in Nampa, Idaho, as the ''Herbert A Littleton Postal Station''. (Aug. 19, 2009; 123 Stat. 1991)

H.R. 2325/P.L. 111–57

To designate the facility of the United States Postal Service located at 1300 Matamoros Street in Laredo, Texas, as the ''Laredo Veterans Post Office''. (Aug. 19, 2009; 123 Stat. 1992)

H.R. 2422/P.L. 111–58

To designate the facility of the United States Postal Service located at 2300 Scenic Drive in Georgetown, Texas, as the ''Kile G. West Post Office Building''. (Aug. 19, 2009; 123 Stat. 1993)

H.R. 2470/P.L. 111–59

To designate the facility of the United States Postal Service located at 19190 Cochran Boulevard FRNT in Port Charlotte, Florida, as the ''Lieutenant Commander Roy H. Boehm Post Office Building''. (Aug. 19, 2009; 123 Stat. 1994)

H.R. 2938/P.L. 111–60

To extend the deadline for commencement of construction of a hydroelectric project. (Aug. 19, 2009; 123 Stat. 1995)

H.J. Res. 44/P.L. 111–61

Recognizing the service, sacrifice, honor, and professionalism of the Noncommissioned Officers of the United States Army. (Aug. 19, 2009; 123 Stat. 1996)

S.J. Res. 19/P.L. 111–62

Granting the consent and approval of Congress to amendments made by the State of Maryland, the Commonwealth of Virginia, and the District of Columbia to the Washington Metropolitan Area Transit Regulation Compact. (Aug. 19, 2009; 123 Stat. 1998)

Last List August 14, 2009

Public Laws Electronic Notification Service (PENS)

PENS is a free electronic mail notification service of newly enacted public laws. To subscribe, go to *http://listserv.gsa.gov/archives/publaws-l.html*

Note: This service is strictly for E-mail notification of new laws. The text of laws is not available through this service. **PENS** cannot respond to specific inquiries sent to this address.