Federal Register

2–5–10 Friday
Vol. 75 No. 24 Feb. 5, 2010

Pages 5877–6088

The **FEDERAL REGISTER** (ISSN 0097–6326) is published daily, Monday through Friday, except official holidays, by the Office of the Federal Register, National Archives and Records Administration, Washington, DC 20408, under the Federal Register Act (44 U.S.C. Ch. 15) and the regulations of the Administrative Committee of the Federal Register (1 CFR Ch. I). The Superintendent of Documents, U.S. Government Printing Office, Washington, DC 20402 is the exclusive distributor of the official edition. Periodicals postage is paid at Washington, DC.

The **FEDERAL REGISTER** provides a uniform system for making available to the public regulations and legal notices issued by Federal agencies. These include Presidential proclamations and Executive Orders, Federal agency documents having general applicability and legal effect, documents required to be published by act of Congress, and other Federal agency documents of public interest.

Documents are on file for public inspection in the Office of the Federal Register the day before they are published, unless the issuing agency requests earlier filing. For a list of documents currently on file for public inspection, see *www.federalregister.gov.*

The seal of the National Archives and Records Administration authenticates the Federal Register as the official serial publication established under the Federal Register Act. Under 44 U.S.C. 1507, the contents of the **Federal Register** shall be judicially noticed.

The **Federal Register** is published in paper and on 24x microfiche. It is also available online at no charge as one of the databases on GPO Access, a service of the U.S. Government Printing Office.

The online edition of the **Federal Register**, *www.gpoaccess.gov/nara,* available through GPO Access, is issued under the authority of the Administrative Committee of the Federal Register as the official legal equivalent of the paper and microfiche editions (44 U.S.C. 4101 and 1 CFR 5.10). It is updated by 6 a.m. each day the **Federal Register** is published and includes both text and graphics from Volume 59, Number 1 (January 2, 1994) forward.

For more information about GPO Access, contact the GPO Access User Support Team, call toll free 1-888-293-6498; DC area 202-512-1530; fax at 202-512-1262; or via e-mail at *gpoaccess@gpo.gov.* The Support Team is available between 7:00 a.m. and 9:00 p.m. Eastern Time, Monday–Friday, except official holidays.

The annual subscription price for the **Federal Register** paper edition is $749 plus postage, or $808, plus postage, for a combined **Federal Register, Federal Register** Index and List of CFR Sections Affected (LSA) subscription; the microfiche edition of the **Federal Register** including the **Federal Register** Index and LSA is $165, plus postage. Six month subscriptions are available for one-half the annual rate. The prevailing postal rates will be applied to orders according to the delivery method requested. The price of a single copy of the daily **Federal Register,** including postage, is based on the number of pages: $11 for an issue containing less than 200 pages; $22 for an issue containing 200 to 400 pages; and $33 for an issue containing more than 400 pages. Single issues of the microfiche edition may be purchased for $3 per copy, including postage. Remit check or money order, made payable to the Superintendent of Documents, or charge to your GPO Deposit Account, VISA, MasterCard, American Express, or Discover. Mail to: U.S. Government Printing Office—New Orders, P.O. Box 979050, St. Louis, MO 63197-9000; or call toll free 1-866-512-1800, DC area 202-512-1800; or go to the U.S. Government Online Bookstore site, see *bookstore.gpo.gov.*

There are no restrictions on the republication of material appearing in the **Federal Register.**

How To Cite This Publication: Use the volume number and the page number. Example: 75 FR 12345.

Postmaster: Send address changes to the Superintendent of Documents, Federal Register, U.S. Government Printing Office, Washington, DC 20402, along with the entire mailing label from the last issue received.

SUBSCRIPTIONS AND COPIES

PUBLIC	
Subscriptions:	
Paper or fiche	**202–512–1800**
Assistance with public subscriptions	**202–512–1806**
General online information	**202–512–1530; 1–888–293–6498**
Single copies/back copies:	
Paper or fiche	**202–512–1800**
Assistance with public single copies	**1–866–512–1800 (Toll-Free)**
FEDERAL AGENCIES	
Subscriptions:	
Paper or fiche	**202–741–6005**
Assistance with Federal agency subscriptions	**202–741–6005**

Printed on recycled paper.

Contents

Federal Register

Vol. 75, No. 24

Friday, February 5, 2010

Agricultural Marketing Service
RULES
Change in Regulatory Periods:
Grapes Grown in a Designated Area of Southeastern California and Imported Table Grapes, 5879–5886
PROPOSED RULES
Changes to Reporting Dates:
Cranberries Grown in the States of MA, RI, CT, NJ, WI, MI, MN, OR, WA, and Long Island, NY, 5898–5899
Revised Nomination and Balloting Procedures:
Cranberries Grown in the States of MA, RI, CT, NJ, WI, MI, MN, OR, WA, and Long Island, NY, 5900–5901
NOTICES
Agency Information Collection Activities; Proposals, Submissions, and Approvals, 5940–5941

Agriculture Department
See Agricultural Marketing Service
See Food and Nutrition Service
See Forest Service
See Rural Utilities Service
NOTICES
Establishment of Wildlife and Hunting Heritage Conservation Council, 6056

Air Force Department
NOTICES
Agency Information Collection Activities; Proposals, Submissions, and Approvals, 6002–6003
Privacy Act; Systems of Records, 6005–6006

Army Department
See Engineers Corps
NOTICES
Agency Information Collection Activities; Proposals, Submissions, and Approvals, 6002–6003
Environmental Impact Statements; Availability, etc.:
Stationing and Operation of Joint High Speed Vessels (JHSVs), 6003–6004

Blind or Severely Disabled, Committee for Purchase From People Who Are
See Committee for Purchase From People Who Are Blind or Severely Disabled

Bonneville Power Administration
NOTICES
Availability of Records of Decisions:
Electrical Interconnection of Lower Snake River Wind Energy Project, 6020

Civil Rights Commission
NOTICES
Meetings:
Utah Advisory Committee, 5943–5944
Wyoming Advisory Committee, 5944

Coast Guard
PROPOSED RULES
Safety Zone:
Dive Platform; Pago Pago Harbor, American Samoa, 5907–5909

Commerce Department
See Industry and Security Bureau
See International Trade Administration
See National Oceanic and Atmospheric Administration
NOTICES
Agency Information Collection Activities; Proposals, Submissions, and Approvals, 5944–5945

Committee for Purchase From People Who Are Blind or Severely Disabled
NOTICES
Procurement List; Additions and Deletions, 5967–5971

Defense Department
See Air Force Department
See Army Department
See Engineers Corps
NOTICES
36(b)(1) Arms Sales Notification, 5971–5993
Agency Information Collection Activities; Proposals, Submissions, and Approvals, 5994–5997
Privacy Act; Systems of Records, 5997–6002

Drug Enforcement Administration
NOTICES
Importers of Controlled Substances:
Application, 6062
Registration, 6061–6062
Manufacturers of Controlled Substances:
Registration, 6062

Education Department
NOTICES
Applications for Funding:
Cooperative Civic Education and Economic Education Exchange Program; Correction, 6006–6007
School Leadership Grant Program, 6007–6012
National Assessment of Educational Progress (NAEP) in Reading, 6012–6013

Energy Department
See Bonneville Power Administration
See Federal Energy Regulatory Commission
NOTICES
Decisions and Orders:
Energy Conservation Program for Consumer Products; Granting Waiver to Hallowell International, etc., 6013–6018
Meetings:
Environmental Management Site-Specific Advisory Board, Hanford, 6018

Engineers Corps
NOTICES
Environmental Impact Statements; Availability, etc.:
Dam Safety Assurance Program Modification Report for the Isabella Dam Project, Kern County, CA, 6004–6005

Environmental Protection Agency
NOTICES
Agency Information Collection Activities; Proposals, Submissions, and Approvals, 6022–6025

Environmental Impact Statements; Availability, etc.:
Availability of EPA Comments, 6025–6026
Weekly Receipt, 6026–6027
Pesticide Experimental Use Permits:
Receipt of Application; Comment Request, 6027–6028
Project Waiver of Section 1605 Buy American Requirement of the American Recovery and Reinvestment Act of 2009 to the City of LaSalle, IL, 6028–6030
Request for Nominations of Experts for the SAB Lead Pb Review Panel, 6030–6031
Revised Risk Assessment Methods for Workers, Children of Workers in Agricultural Fields, etc., 6031

Executive Office of the President
See Presidential Documents

Federal Aviation Administration
PROPOSED RULES
Proposed Amendments of Class E Airspace:
Claremore, OK, 5905–5907
Magnolia, AR, 5904–5905

Federal Communications Commission
NOTICES
Meetings:
Advisory Committee on Diversity for Communications in the Digital Age, 6031–6032

Federal Emergency Management Agency
RULES
Final Flood Elevation Determinations, 5894–5897
Suspension of Community Eligibility, 5890–5893
Suspension of Community Eligibility for Failure to Maintain Adequate Floodplain Management Regulations, 5893–5894
PROPOSED RULES
Proposed Flood Elevation Determinations, 5909–5929
Proposed Flood Elevation Determinations; Correction, 5929–5931
NOTICES
Emergency and Related Determinations:
Arizona, 6046–6047

Federal Energy Regulatory Commission
NOTICES
Applications for Amendments of Licenses and Soliciting Comments, Motions to Intervene, and Protests:
Boyce Hydro Power, LLC, 6018–6019
Applications for Transfers of Licenses and Soliciting Comments and Motions to Intervene:
NewPage Wisconsin System Inc.; Kaukauna Utilities, 6019
Attendance at NYISO Meetings, 6019–6020
Competing Preliminary Permit Applications Accepted for Filing and Soliciting Comments, etc.:
Brookfield Power United States; Generation Development, LLC; Robertson Energy Group, LLC, 6020–6021
Petitions for Rate Approval:
Arkansas Oklahoma Gas Corp., 6021
Withdrawals of Staff Protests to Proposed Blanket Certificate Activities:
Florida Gas Transmission Co., LLC, 6021

Federal Maritime Commission
NOTICES
Agreements Filed, 6032

Fish and Wildlife Service
NOTICES
Environmental Impact Statements; Availability, etc.:
Federal Sport Fish Restoration; California Department of Fish and Game Fish Hatchery and Stocking Program, 6058–6060

Food and Drug Administration
RULES
Listing of Color Additives Exempt From Certification:
Astaxanthin Dimethyldisuccinate; Confirmation of Effective Date, 5887
Paracoccus Pigment; Confirmation of Effective Date, 5887
New Animal Drugs for Use in Animal Feeds:
Ractopamine; Monensin, 5887–5888
NOTICES
Agency Information Collection Activities; Proposals, Submissions, and Approvals, 6034–6039

Food and Nutrition Service
RULES
Commodity Supplemental Food Program:
Amendment Removing Priority Given to Women, Infants, and Children before the Elderly in Program Participation, 5877–5879

Forest Service
NOTICES
Environmental Impact Statements; Availability, etc.:
Umatilla National Forest, Walla Walla Ranger District, Walla Walla, Washington Cobbler II Timber Sale and Fuels Reduction Project, 5941–5943

General Services Administration
NOTICES
Agency Information Collection Activities; Proposals, Submissions, and Approvals, 6032
Bulletins:
FMR B–25; Property Obtained through Use of Charge Cards, 6032–6033

Health and Human Services Department
See Food and Drug Administration
See National Institutes of Health
NOTICES
Agency Information Collection Activities; Proposals, Submissions, and Approvals, 6033
Meetings:
President's Advisory Council on Faith-Based and Neighborhood Partnerships, 6033–6034

Homeland Security Department
See Coast Guard
See Federal Emergency Management Agency

Housing and Urban Development Department
RULES
Federal Manufactured Home Construction and Safety Standards and Other Orders:
HUD Statements that are Subject to Consensus Committee Processes, 5888–5890
NOTICES
Federal Property Suitable as Facilities to Assist the Homeless, 6047
Funding Awards for Fiscal Year 2009 for the Housing Choice Voucher Program, 6047–6056

Industry and Security Bureau
NOTICES
Meetings:
Emerging Technology and Research Advisory Committee, 5952

Interior Department
See Fish and Wildlife Service
See Land Management Bureau
NOTICES
Establishment of Wildlife and Hunting Heritage Conservation Council, 6056
Renewal of National Geospatial Advisory Committee, 6056–6057
Terminating the Sporting Conservation Council, 6057

International Trade Administration
NOTICES
Extension of Time Limit for the Preliminary Results:
First Antidumping Duty Administrative Review of Sodium Hexametaphosphate from the People's Republic of China, 5946–5947
Final Results and Rescission in Part of Antidumping Duty Administrative Review:
Stainless Steel Sheet and Strip in Coils from Taiwan, 5947–5950
Preliminary Results of Antidumping Duty Administrative Review and Intent to Rescind Review in Part:
Wooden Bedroom Furniture from the People's Republic of China, 5952–5964
Preliminary Results of Antidumping Duty Administrative Review:
Certain Polyester Staple Fiber from Taiwan, 5964–5967

International Trade Commission
NOTICES
Meetings; Sunshine Act, 6060

Justice Department
See Drug Enforcement Administration
NOTICES
Lodging of Consent Decrees under Clean Air Act, 6060–6061

Land Management Bureau
NOTICES
Environmental Impact Statements; Availability, etc.:
Proposed Chevron Energy Solutions Lucerne Valley Solar Project, San Bernardino County, CA, 6057–6058
Meetings:
Southwest Colorado Resource Advisory Council, 6060

Marine Mammal Commission
NOTICES
Meetings, 6062–6063

National Highway Traffic Safety Administration
PROPOSED RULES
Anthropomorphic Test Devices:
Hybrid III Test Dummy, ES–2re Side Impact Crash Test Dummy, 5931–5939

National Institutes of Health
NOTICES
Meetings:
Center for Scientific Review, 6039–6041, 6044–6046
National Cancer Institute, 6040–6041, 6043–6044
National Center for Complementary and Alternative Medicine, 6039, 6041–6042
National Institute of Allergy and Infectious Diseases, 6043
National Institute of Arthritis and Musculoskeletal and Skin Diseases, 6046
National Institute of Biomedical Imaging and Bioengineering, 6039
National Institute of Diabetes and Digestive and Kidney Diseases, 6042–6043
National Institute of Environmental Health Sciences, 6044
National Institute on Aging, 6042
National Institute on Drug Abuse, 6042
National Library of Medicines, 6042

National Oceanic and Atmospheric Administration
NOTICES
Agency Information Collection Activities; Proposals, Submissions, and Approvals:
Alaska Cooperatives in the Bering Sea and Aleutian Islands, 5945–5946
Pacific Coast Groundfish, Rationalization Sociocultural Study, 5945
Fisheries of the Caribbean, Gulf of Mexico, and South Atlantic:
Reef Fish Fishery of the Gulf of Mexico, 5951–5952
Snapper and Grouper Off the Southern Atlantic States, 5950–5951

National Science Foundation
NOTICES
Meetings:
Committee on Equal Opportunities in Science and Engineering, 6063

Nuclear Regulatory Commission
NOTICES
Availability of NRC Open Government Website, 6063–6064
Draft Emergency Action Level Frequently Asked Questions, 6064
Environmental Impact Statements; Availability, etc.:
Creek In-Situ Recovery Project in Sweetwater County, Wyoming, 6068–6069
Dominion Energy Kewaunee, Inc; Kewaunee Power Station, 6065
License Amendment for Revised Groundwater Protection Standards, Western Nuclear, Inc., Jeffrey City, Wyoming, 6067–6068
Moore Ranch In-Situ Recovery Project in Campbell County, Wyoming, 6065–6066
Nichols Ranch In-Situ Recovery Project in Campbell and Johnson Counties, Wyoming, 6066–6067
Establishment of Atomic Safety and LIcensing Board:
Idaho State University, 6069–6070
Meetings:
International Atomic Energy Agency Basic Safety Standards Version 3.0, Draft Safety Requirements DS379, 6070–6071
Withdrawal of Application for Amendment to Facility Operating License:
Exelon Generation Company, Llc, PSEG Nuclear, Llc; Peach Bottom Atomic Power Station Units 2 and 3, 6071

Presidential Documents
PROCLAMATIONS
Special Observances:
American Heart Month (Proc. 8477), 6085–6086

National African American History Month (Proc. 8476), 6081–6084
ADMINISTRATIVE ORDERS
Carbon Capture and Storage; Federal Strategy (Memorandum of February 3, 2010), 6087–6088

Rural Utilities Service
PROPOSED RULES
Guarantees for Bonds and Notes Issued for Electrification or Telephone Purposes, 5902–5904

Securities and Exchange Commission
NOTICES
Meetings:
Investor Advisory Committee, 6071–6072
Self-Regulatory Organizations; Proposed Rule Changes:
NASDAQ Stock Market LLC, 6072–6079

State Department
NOTICES
Culturally Significant Objects Imported for Exhibition Determinations:
Compass and Rule; Architecture as Mathematical Practice in England (1500–1750), 6079

Transportation Department
See Federal Aviation Administration
See National Highway Traffic Safety Administration

Separate Parts In This Issue

Part II
Presidential Documents, 6081–6088

Reader Aids
Consult the Reader Aids section at the end of this page for phone numbers, online resources, finding aids, reminders, and notice of recently enacted public laws.

To subscribe to the Federal Register Table of Contents LISTSERV electronic mailing list, go to http://listserv.access.gpo.gov and select Online mailing list archives, FEDREGTOC-L, Join or leave the list (or change settings); then follow the instructions.

CFR PARTS AFFECTED IN THIS ISSUE

A cumulative list of the parts affected this month can be found in the Reader Aids section at the end of this issue.

3 CFR

Proclamations:

8476 6083
8477 6085

Administrative Orders:

Memorandums:
Memorandum of February 3, 2010 6087

7 CFR

247 5877
925 5879
944 5879

Proposed Rules:

929 (2 documents) 5898, 5900
1720 5902

14 CFR

Proposed Rules:

71 (2 documents) 5904, 5905

21 CFR

73 (2 documents) 5887
558 5887

24 CFR

3280 5888
3282 5888

33 CFR

Proposed Rules:

165 5907

44 CFR

64 (2 documents) 5890, 5893
67 5894

Proposed Rules:

67 (4 documents) ... 5909, 5925, 5929, 5930

49 CFR

Proposed Rules:

572 5931

Rules and Regulations

Federal Register
Vol. 75, No. 24
Friday, February 5, 2010

This section of the FEDERAL REGISTER contains regulatory documents having general applicability and legal effect, most of which are keyed to and codified in the Code of Federal Regulations, which is published under 50 titles pursuant to 44 U.S.C. 1510.

The Code of Federal Regulations is sold by the Superintendent of Documents. Prices of new books are listed in the first FEDERAL REGISTER issue of each week.

DEPARTMENT OF AGRICULTURE

Food and Nutrition Service

7 CFR Part 247

[FNS–2009–0015]

RIN 0584–AD93

Commodity Supplemental Food Program (CSFP): Amendment Removing Priority Given to Women, Infants, and Children Before the Elderly in Program Participation

AGENCY: Food and Nutrition Service, USDA (FNS)

ACTION: Final rule.

SUMMARY: This final rule amends the regulations for the Commodity Supplemental Food Program (CSFP) by removing the priority given to women, infants, and children before the elderly in program participation, in accordance with the amendment made by the Food, Conservation, and Energy Act of 2008 (the 2008 Farm Bill). As a result of this amendment, local agencies are no longer required to prioritize benefit issuance based on population group. All CSFP applicants may be treated equally when caseload slots become available, provided all eligibility requirements are met.

DATES: *Effective Date:* This rule will become effective on March 8, 2010, without further notice.

FOR FURTHER INFORMATION CONTACT: Michelle Waters, Program Analyst, at Policy Branch, Food Distribution Division, Food and Nutrition Service, U.S. Department of Agriculture, Room 500, 3101 Park Center Drive, Alexandria, Virginia 22302–1594 or by telephone at (703) 305–2662.

SUPPLEMENTARY INFORMATION:

I. Background

The Food and Nutrition (FNS) is amending CSFP regulations at 7 CFR part 247 to incorporate the requirements of the Food, Conservation, and Energy Act of 2008, Public Law 110–246 (the 2008 Farm Bill). Before the 2008 Farm Bill, the Agriculture and Consumer Protection Act of 1973, 7 U.S.C. 612c note, required that low-income elderly persons could only be served by CSFP if funds were available after all women, infants, and children were first served. Section 4221 of the 2008 Farm Bill eliminated the priority status given to women, infants, and children effective October 1, 2008. Following enactment of the 2008 Farm Bill, on July 16, 2008, FNS issued a policy memorandum implementing Section 4221, which became effective on October 1, 2008. As a result of the memorandum, FNS has not required local agencies to prioritize women, infant, and children applicants over elderly applicants for participation in CSFP since the effective date.

The proportion of elderly individuals participating in CSFP has increased significantly in a relatively short amount of time. In fiscal year (FY) 1998, about two-thirds, or 66 percent, of all CSFP participants were elderly. Elderly participation increased to 93 percent by FY 2008. During the same time period, Special Supplemental Nutrition Program for Women, Infants, and Children (WIC) participation increased by over 1.3 million. The change in the CSFP participant population is due primarily to the prevalence of the WIC program. Because of greater accessibility of health care and nutrition education where it is available, WIC is more appropriate for women, infants, and children who are categorically eligible.

The 2008 Farm Bill provision recognizes the participation trend and the fact that most women, infants, and children who are eligible to participate in CSFP could alternatively participate in WIC, which provides nutrition services to eligible pregnant, post-partum and breastfeeding women, infants, and children up to the age of five, while low-income elderly do not enjoy a choice between the two programs. WIC operates in all areas that CSFP serves and provides food, as well as nutrition education and health referrals. Furthermore, WIC has the capability to serve all CSFP participants who are eligible for WIC.

II. Discussion of the Final Rule Provisions

A. Applicants Exceed Caseload Levels, 7 CFR Part 247.11

In this final rule, we remove the requirement in 7 CFR 247.11(a) that local agencies identify the population group of each CSFP applicant on its waiting list. This rule provides that CSFP local agencies have the discretion to continue to collect this information, if needed for food package planning purposes. In 7 CFR 247.11(b), we remove the requirement that local agencies provide benefits to eligible individuals on the CSFP waiting list in order of priority by specified population group. The 2008 Farm Bill removed the priority given to women, infants, and children, thus eliminating the need for this regulatory provision. In the revised 7 CFR 247.11(b), a local agency must certify eligible individuals consistent with civil rights requirements at 7 CFR 247.37. Furthermore, we specify in the revised 7 CFR 247.11(b) that local agencies may certify eligible individuals from the waiting list based on the date of their application, on a first-come, first-served basis.

B. Certification Period, 7 CFR Part 247.16

In 7 CFR 247.16(a)(2)(iii), we remove the requirement that State agencies may only allow local agencies to extend the certification period for elderly persons without a formal review only if no eligible women, infants, or children are waiting to be served. However, the local agency must continue to verify the elderly person's address and continued interest in receiving CSFP benefits, and the local agency must have sufficient reason to believe the person still meets income eligibility standards. This change brings CSFP regulations into compliance with Section 4221 of the 2008 Farm Bill.

C. Caseload Assignment, 7 CFR Part 247.21

In the introductory text to 7 CFR 247.21(a)(2), for additional caseload requests from State agencies, we eliminate the FNS priority consideration given to requests to increase service to women, infants, and children over requests to increase service to the elderly. In 7 CFR 247.21(a)(2)(iii)(A), we remove previous year program participation of women, infants, and

children, and the elderly in a State as a factor of consideration for determining the amount of additional caseload States should receive. Likewise, in 7 CFR 247.21(a)(3) we eliminate program participant categories as a factor of consideration in the FNS assignment of caseload to State agencies which have approved State Plans and begin to participate in CSFP. These three changes bring CSFP regulations into compliance with Section 4221 of the 2008 Farm Bill.

III. Procedural Matters

A. Executive Order 12866

This rule has been determined to be not significant and was not reviewed by the Office of Management and Budget (OMB) under Executive Order 12866.

B. Regulatory Flexibility Act

This rule has been reviewed with regard to the requirements of the Regulatory Flexibility Act (5 U.S.C. 601–612). It has been certified that this action will not have a significant impact on a substantial number of small entities. Although State and local agencies administering CSFP will be affected by this rulemaking, the economic effect will not be significant.

C. Unfunded Mandates Reform Act

Title II of the Unfunded Mandates Reform Act of 1995 (UMRA), Public Law 104–4, establishes requirements for Federal agencies to assess the effects of their regulatory actions on State, local, and tribal governments and the private sector. Under Section 202 of the UMRA, FNS generally must prepare a written statement, including a cost-benefit analysis, for proposed and final rules with "Federal mandates" that may result in expenditures to State, local, or tribal governments, in the aggregate, or to the private sector, of $100 million or more in any one year. When such a statement is needed for a rule, Section 205 of the UMRA generally requires FNS to identify and consider a reasonable number of regulatory alternatives and adopt the least costly, more cost-effective, or least burdensome alternative that achieves the objectives of the rule. This rule contains no Federal mandates (under the regulatory provisions of Title II of the UMRA) for State, local, and tribal governments or the private sector of $100 million or more in any one year. This rule is, therefore, not subject to the requirements of Sections 202 and 205 of the UMRA.

D. Executive Order 12372

CSFP is listed in the Catalog of Federal Domestic Assistance under 10.565. For the reasons set forth in the final rule in 7 CFR part 3015, Subpart V and related Notice (48 FR 29114, June 24, 1983), the donation of foods in such programs is included in the scope of Executive Order 12372, which requires intergovernmental consultation with State and local officials.

E. Federalism Summary Impact Statement

Executive Order 13132 requires Federal agencies to consider the impact of their regulatory actions on State and local governments. Where such actions have federalism implications, agencies are directed to provide a statement for inclusion in the preamble to the regulations describing the agency's considerations in terms of the three categories called for under Section (6)(b)(2)(B) of Executive Order 13132. FNS has considered the impact of this rule on State and local governments and has determined that this rule does not have federalism implications.

F. Executive Order 12988

This rule has been reviewed under Executive Order 12988, Civil Justice Reform. This rule is intended to have a preemptive effect with respect to any State or local laws, regulations, or policies which conflict with its provisions or which would otherwise impede its full implementation. This rule is not intended to have retroactive effect. Prior to any judicial challenge to the provisions of this rule or the application of its provisions, all applicable administrative procedures must be exhausted.

G. Civil Rights Impact Analysis (CRIA)

The Office of Civil Rights (OCR) has assessed civil rights implications and impacts of eligibility criteria, methods of administration, and other requirements associated with this rule, including strategies to eliminate, alleviate, or mitigate adverse and any disproportionate civil rights impacts identified in the CRIA. Based on a thorough review of this regulation, OCR has determined:

- This change will bring CSFP regulations into compliance with the 2008 Farm Bill;
- It is important to closely monitor changes in CSFP participation rates;
- CSFP policy has directed local agencies to refer women, infants, and children to WIC or other appropriate programs; and
- OCR will incorporate implementation of this rule change into Civil Rights Compliance Reviews to assess longitudinal trends.

H. Paperwork Reduction Act

The Paperwork Reduction Act of 1995 (44 U.S.C. Chap. 35; see 5 CFR part 1320) requires that OMB approve all collections of information by a Federal agency from the public before they can be implemented. Respondents are not required to respond to any collection of information unless it displays a current valid OMB control number. This rule does not contain any new information collection requirements that are subject to review and approval by OMB.

I. E-Government Act Compliance

FNS is committed to compliance with the E-Government Act to promote the use of the Internet and other information technologies to provide increased opportunities for citizen access to Government information and services, and for other purposes.

J. Good Cause Determination

This action is being finalized without prior notice or public comment under authority of 5 U.S.C. 553(b)(3). Section 4221 of the 2008 Farm Bill amends Section 5 of the Agriculture and Consumer Protection Act of 1973 (7 U.S.C. 612c note, 87 Stat. 249) by eliminating the requirement that all eligible women, infants, and children are to be served before elderly persons in CSFP. The 2008 Farm Bill language is clear and mandatory, leaving no room for discretion. CSFP regulations are therefore inconsistent with Section 5 of the Agriculture and Consumer Protection Act of 1973. Thus, the Department has determined in accordance with 5 U.S.C. 553(b) that Notice of Proposed Rulemaking and Opportunity for Public Comments is unnecessary and contrary to the public interest and, in accordance with 5 U.S.C. 553(d), finds that good cause exists for making this action effective without prior public comment.

List of Subjects in 7 CFR Part 247

Education, Food assistance programs, Grant programs—health, Grant programs—social programs, Indians, Infants and children, Investigations, Maternal and child health, Nutrition, Reporting and recordkeeping requirements, Surplus agricultural commodities, Women.

■ Accordingly, 7 CFR part 247 is amended as follows:

PART 247—COMMODITY SUPPLEMENTAL FOOD PROGRAM

1. The authority citation for 7 CFR part 247 is revised to read as follows:

Authority: Sec. 5, Pub. L. 93–86, 87 Stat. 249, as added by Sec. 1304(b)(2), Pub. L. 95–

113, 91 Stat. 980 (7 U.S.C. 612c note); sec. 1335, Pub. L. 97–98, 95 Stat. 1293 (7 U.S.C. 612c note); sec. 209, Pub. L. 98–8, 97 Stat. 35 (7 U.S.C. 612c note); sec. 2(8), Pub. L. 98–92, 97 Stat. 611 (7 U.S.C. 612c note); sec. 1562, Pub. L. 99–198, 99 Stat. 1590 (7 U.S.C. 612c note); sec. 101(k), Pub. L. 100–202; sec. 1771(a), Pub. L. 101–624, 101 Stat. 3806 (7 U.S.C. 612c note); sec 402(a), Pub. L. 104–127, 110 Stat. 1028 (7 U.S.C. 612c note); sec. 4201, Pub. L. 107–171, 116 Stat. 134 (7 U.S.C. 7901 note); sec. 4221, Pub. L. 110–246, 122 Stat. 1886 (7 U.S.C. 612c note).

2. Section 247.11 is amended by revising the second sentence in paragraph (a) and by revising paragraph (b) to read as follows:

§ 247.11 Applicants exceed caseload levels.

(a) * * * In establishing the waiting list, the local agency must include the date of application and information necessary to allow the local agency to contact the applicant when caseload space becomes available. * * *

(b) *What are the requirements for serving individuals on the waiting list once caseload slots become available?* The local agency must certify eligible individuals from the waiting list consistent with civil rights requirements at § 247.37. For example, a local agency may certify eligible individuals from the waiting list based on the date the application was received on a first-come, first-served basis.

§ 247.16 [Amended]

■ 3. Section 247.16 is amended in paragraph (a)(2)(i) by adding the word "and" after the semi-colon; paragraph (a)(2)(ii) by removing "; and", and adding a period at the end of the sentence; and by removing paragraph (a)(2)(iii).

■ 4. In § 247.21:

■ a. Revise the introductory text of paragraph (a)(2);

■ b. Remove paragraph (a)(2)(iii)(A);

■ c. Redesignate paragraphs (a)(2)(iii)(B) through (a)(2)(iii)(D) as paragraphs (a)(2)(iii)(A) through (a)(2)(iii)(C), respectively; and

■ d. Remove the second sentence of paragraph (a)(3).

The revision reads as follows:

§ 247.21 Caseload assignment.

(a) * * *

(2) *Additional caseload.* Each participating State agency may request additional caseload to increase program participation. Eligibility for and assignment of additional caseload are determined in the following manner:

* * * * *

Dated: January 27, 2010.

Julia Paradis,

Administrator, Food, Nutrition, and Consumer Services.

[FR Doc. 2010–2594 Filed 2–4–10; 8:45 am]

BILLING CODE 3410–30–P

DEPARTMENT OF AGRICULTURE

Agricultural Marketing Service

7 CFR Parts 925 and 944

[Doc. No. AMS–FV–06–0184; FV03–925–1 FIR]

Grapes Grown in a Designated Area of Southeastern California and Imported Table Grapes; Change in Regulatory Periods

AGENCY: Agricultural Marketing Service, USDA.

ACTION: Final rule.

SUMMARY: The Department of Agriculture (USDA) is adopting, as a final rule, without change, an interim final rule revising the regulatory period when minimum grade, size, quality, and maturity requirements apply to southeastern California grapes under Marketing Order No. 925 (order), and to imported grapes under the table grape import regulation, from April 20 through August 15 of each year to April 10 through July 10 of each year. The order regulates the handling of grapes grown in a designated area of southeastern California and is administered locally by the California Desert Grape Administrative Committee (Committee). The change to the regulatory period beginning date is needed to help ensure that imported table grapes marketed in competition with domestic grapes are subject to the grade, size, quality, and maturity requirements of the order. Section 8e of the Agricultural Marketing Agreement Act of 1937 (Act) provides authority for such change. The change to the regulatory period ending date is needed to realign the regulatory period with current shipping trends for grapes in the order's production area. This rule also continues in effect the action that clarified the maturity (soluble solids) requirements for southeastern California and imported Flame Seedless variety grapes.

DATES: *Effective Date:* February 8, 2010.

FOR FURTHER INFORMATION CONTACT: Barry Broadbent, Northwest Marketing Field Office, Marketing Order Administration Branch, Fruit and Vegetable Programs, AMS, USDA, 1220 SW. Third Avenue, Suite 385, Portland, Oregon 97204; Telephone: (503) 326–2724, Fax: (503) 326–7440, or E-mail: *Barry.Broadbent@ams.usda.gov;* or Kurt Kimmel, California Marketing Field Office, Marketing Order Administration Branch, Fruit and Vegetable Programs, AMS, USDA, 2202 Monterey Street, Suite 102B, Fresno, California 93721; Telephone: (559) 487–5901, Fax: (559) 487–5906, or E-mail: *Kurt.Kimmel@ams.usda.gov.*

Small businesses may request information on complying with this regulation by contacting Jay Guerber, Marketing Order Administration Branch, Fruit and Vegetable Programs, AMS, USDA, 1400 Independence Avenue, SW., STOP 0237, Washington, DC 20250–0237; Telephone: (202) 720–2491, Fax: (202) 720–8938, or E-mail: *Jay.Guerber@ams.usda.gov.*

SUPPLEMENTARY INFORMATION: This rule is issued under Marketing Agreement and Order No. 925 (7 CFR part 925), regulating the handling of grapes grown in a designated area of southeastern California, hereinafter referred to as the "order." The order is effective under the Agricultural Marketing Agreement Act of 1937, as amended (7 U.S.C. 601–674), hereinafter referred to as the "Act."

This rule is also issued under section 8e of the Act, which provides that whenever certain specified commodities, including table grapes, are regulated under a Federal marketing order, imports of these commodities into the United States are prohibited unless they meet the same or comparable grade, size, quality, or maturity requirements as those in effect for the domestically produced commodities. The table grape import regulation is specified in § 944.503 (7 CFR part 944.503).

USDA is issuing this rule in conformance with Executive Order 12866.

This rule has been reviewed under Executive Order 12988, Civil Justice Reform. This action is not intended to have retroactive effect.

The Act provides that administrative proceedings must be exhausted before parties may file suit in court. Under section 608c(15)(A) of the Act, any handler subject to an order may file with USDA a petition stating that the order, any provision of the order, or any obligation imposed in connection with the order is not in accordance with law and request a modification of the order or to be exempted therefrom. A handler is afforded the opportunity for a hearing on the petition. After the hearing, USDA would rule on the petition. The Act provides that the district court of the United States in any district in which

the handler is an inhabitant, or has his or her principal place of business, has jurisdiction to review USDA's ruling on the petition, provided an action is filed not later than 20 days after the date of the entry of the ruling.

There are no administrative procedures that must be exhausted prior to any judicial challenge to the provisions of import regulations issued under section 8e of the Act.

Introduction

This rule finalizes the interim final rule published in the **Federal Register** on January 21, 2009 (74 FR 3412), that revised the beginning and ending dates of the regulatory period when minimum grade, size, quality, and maturity requirements apply to southeastern California grapes under Marketing Order No. 925, and to imported grapes under the table grape import regulation. The revised regulatory period also applies to pack and container requirements issued under the order. This final rule continues in effect the changes made by the interim final rule. The previous regulatory period for both domestic and imported grapes was April 20 through August 15 of each year.

The Committee, which locally administers the order, unanimously recommended changing the date when the order's requirements expire to July 10 of each year, because few grapes are normally shipped after that date. Additionally, the Desert Grape Growers League of California (League) requested that USDA change the beginning date of the regulatory period for imported table grapes from April 20 to April 1. The League requested this change to ensure that grapes imported prior to the beginning of the regulatory period, but marketed during the regulatory period in competition with domestically produced grapes, meet the California grape order's grade, size, quality, and maturity requirements. After much consideration, USDA has determined that a beginning regulatory period date of April 10 adequately addresses the League's concerns and is consistent with the provisions of the Act.

This rule also finalizes the clarification to the maturity (soluble solids) requirements for southeastern California and imported Flame Seedless variety grapes.

Section 925.52(a)(2) of the grape marketing order provides authority to limit the handling of any grade, size, quality, maturity, or pack of grapes differently for different varieties, or any combination of the foregoing during any period or periods. Section 925.55 provides for mandatory inspection for all grapes handled pursuant to § 925.52 of the order. Section 925.304 of the order's administrative rules and regulations prescribes the period during which grapes are handled pursuant to regulation.

Current regulations under the order require grapes shipped during the regulatory period to be at least U.S. No. 1 Table, as set forth in the United States Standards for Grades of Table Grapes (European or Vinifera type) (7 CFR 51.880 through 51.914) (Standards), or meet the requirements of the U.S. No. 1 Institutional grade, except for the tolerance percentage for bunch size. The tolerance is 33 percent instead of 4 percent as is required to meet the U.S. No. 1 Institutional grade.

Grapes meeting the institutional quality requirements may be marked "DGAC No. 1 Institutional" but shall not be marked "Institutional Pack." Grapes of the Flame Seedless and Perlette varieties are required to meet the "other varieties" standard for berry size (ten-sixteenths of an inch).

In addition, fresh shipments of grapes from the marketing order area are required to meet the minimum maturity requirements for table grapes as specified in the California Code of Regulations (3 CCR 1436.12). Grapes of the Flame Seedless variety shall be considered mature if the juice meets or exceeds 16.5 percent soluble solids, or contains not less than 15 percent soluble solids and the soluble solids are equal to or in excess of 20 parts to every part acid contained in the juice in accordance with applicable sampling and testing procedures specified in the California Code of Regulations.

Prior to the interim final rule in this rulemaking, the regulatory period for imported grapes began April 20 and extended through August 15 of each year, the same as the period delineated in the marketing order for domestic grapes. This rule finalizes the revised regulatory period established in the import regulations for imported grapes to April 10 through July 10 of each year. This period mirrors the period set by the marketing order for domestic regulation.

The ending date of the regulatory period was changed from August 15 to July 10 to more accurately reflect the production season of grapes produced within the marketing order production area. Recent production history shows the majority of the grapes produced in the production area are shipped prior to July 10. Regulating after that date is unjustified, both economically and logistically, for the small quantity of grapes that are produced.

Additionally, the beginning date of the regulatory period was changed from April 20 to April 10 of each year to respond to the marketing and technology changes that have occurred within the imported grape industry. Improvements in cold storage technology have enabled large quantities of imported grapes to be imported prior to the beginning of the marketing order regulatory period, when the order requirements come into effect, and subsequently be held in cold storage for long periods of time. This can potentially allow the stored product to be marketed after the start of the regulatory period in competition with regulated, domestically produced grapes. Establishing the earlier beginning regulatory period date for the marketing order helps ensure that imported table grapes marketed in competition with domestically produced table grapes meet the minimum marketing order quality standards.

Marketing order regulation is intended to protect the interests of both the producers and consumers of agricultural commodities covered under the Act. A USDA/ERS report discussed the purposes and benefits of quality and condition standards (USDA, Economic Research Service, Agricultural Economic Report Number 707, "Federal Marketing Orders and Federal Research and Promotion Programs, Background for 1995 Farm Legislation", by Steven A. Neff and Gerald E. Plato, May 1995). The basic rationale for such standards is that only satisfied customers are repeat customers. Thus, quality standards help ensure that consumers are presented a product that is of a consistent quality, helps create buyer confidence, and contributes to stable market conditions. When consumers purchase satisfactory quality grapes, they are likely to purchase grapes again, and inspection helps ensure a quality product. It is anticipated that this action will improve the orderly marketing of grapes and benefit producers and consumers of grapes.

Changing the Date When Domestic and Imported Table Grape Regulations Expire

Prior to the interim final rule, § 925.304 of the order specified a regulatory period of April 20 through August 15 when minimum grade, size, quality, and maturity requirements apply to grapes grown in southeastern California. A final rule published on March 20, 1987, (52 FR 8865) established the regulatory period to promote the orderly marketing of grapes.

The Committee met on November 14, 2002, and unanimously recommended modifying § 925.304 to change the date

when minimum grade, size, quality, and maturity requirements expire to July 10, rather than August 15. The Committee met again on December 12, 2002, and clarified that the proposed regulatory period should also apply to pack and container requirements under the order.

Since 1987, the amount of grapes handled in the production area after July 10 has generally decreased as older vineyards, which typically produce late season varieties, have been removed. For the years 2000–2008, almost 99 percent of the approximately 7.3 million 18-pound lugs of grapes grown annually in the production area were handled during the period April 20 to July 10. On average, just over one percent of these grapes were harvested and marketed during the period July 11 to August 15. The Committee believes that ending the regulatory requirements on July 10 will benefit handlers and producers by reducing the costs associated with mandatory inspection.

Under section 8e of the Act, minimum grade, size, quality, and maturity requirements for table grapes imported into the United States are established under Table Grape Import Regulation 4 (7 CFR 944.503) (import regulation). Section 944.503(a)(3) of the import regulation specifies the regulatory period when imported grapes are subject to minimum requirements. The change to the order's regulatory period expiration date required a corresponding change to expiration date of the regulatory period for imported table grapes.

It is expected that the earlier end to the regulatory period for domestic and imported grapes will benefit handlers, producers, and importers, because the regulatory burden on these entities will be reduced.

Changing the Beginning of the Regulatory Period for Domestic and Imported Table Grapes

In January 2003, the League requested that USDA change the beginning date of the regulatory period for imported table grapes from April 20 to April 1, and provided information in support of that request. The League contended that, in prior years, grapes not subject to marketing order requirements were imported prior to the start of the regulatory period and were subsequently marketed during the regulatory period in competition with domestically produced grapes subject to the California grape order's grade, size, maturity, and quality requirements. The League further contended that there would be no adverse effect on the availability and prices of grapes if the beginning of the regulatory period for imports were changed to April 1.

After much consideration, including the League's proposal and comments received by USDA concerning the proposed change, USDA established, through an interim final rule, an April 10 beginning date of the regulatory period for imported grapes. This final rule continues in effect the action that revised the beginning regulatory period date to April 10.

USDA is authorized by Section 608e(b)(1) of the Act to extend marketing order requirements for a period, not to exceed 35 days, during which the order requirements would be effective for an imported commodity during any year, if USDA determines that the additional period of time is necessary to effectuate the purposes of the Act and to ensure that imports marketed during the regulatory period meet the grade, size, quality, or maturity requirements of the marketing order applicable to domestic production. Further, section 608e(b)(2) of the Act provides that in making such a determination, USDA shall consider, through notice and comment procedures:

(A) To what extent, during the previous year, imports of a commodity that did not meet the requirements of a marketing order applicable to such commodity were marketed in the United States during the period that such marketing order requirements were in effect for available domestic commodities (or would have been marketed during such time if not for any additional period established by the Secretary);

(B) If the importation into the United States of such commodity did, or was likely to, avoid the grade, size, quality, or maturity standards of a seasonal marketing order applicable to such commodity produced in the United States; and

(C) The availability and price of commodities of the variety covered by the marketing order during any additional period the marketing order requirements are to be in effect.

In its request, the League presented arguments and data that support the claim that unregulated imported grapes have been and likely will continue to be in the market in competition with grapes subject to regulation, that the presence of such grapes may result in an avoidance of the marketing order requirements, and that expanding the marketing order regulatory period to ensure that imported and domestic grapes marketed during the regulatory period meet minimum marketing order quality standards will have minimal impact on the price and availability of grapes.

Current market mechanisms for imported grapes dictate that product is either immediately shipped directly to retail markets or diverted for holding in cold storage facilities. Improved cold storage technology allows importers to divert imported grapes from normal marketing channels for up to 60 days after their arrival at a U.S. port. The practice of importing grapes into the U.S. prior to the beginning of the regulatory period, holding them in cold storage, and subsequently releasing them into the market after the regulatory period has begun may result in the avoidance of the marketing order regulation. Revising the start of the regulatory period to April 10 reduces the likelihood that uninspected grapes that are imported prior to the start of regulation are marketed during the regulatory period.

Exporting countries ship many high quality grapes to the U.S. prior to April 20. Those same countries have the capability of exporting grapes which consistently meet the minimum requirements of the import regulation. There is no expectation that the earlier beginning date of regulation will cause a shortage of grapes in the market. The earlier beginning date helps ensure that grapes being imported and marketed during the regulatory period meet minimum requirements prior to being allowed to be marketed in the U.S.

It is expected that uniform high quality product consistently in the market will encourage repeat purchases of imported and domestic grapes, which should benefit producers, handlers, importers, and consumers of grapes.

The U.S. Census Bureau indicates that on average for the years 2000–2008, 68 million 18-pound lugs of grapes were imported into the United States. The two main countries exporting to the United States were Chile, with average exports of 51 million 18-pound lugs (76 percent of the total), and Mexico, with 14 million 18-pound lugs (21 percent of the total). The remaining three percent came from various other countries.

Total grape imports for the February through April period in the years 2000–2008 averaged 44 million 18-pound lugs. Of this amount, 97 percent came from Chile and the remaining percentage came from various other countries.

Information from USDA's Market News Service (Market News) for 2000–2008 shows that the Port of Philadelphia (where historically the greatest percentage of Chilean table grapes enter the United States) received an average of 20 million 18-pound lugs of imported

Chilean grapes during the February 1 to April 19 period, with approximately 30 percent (6 million) of these 20 million 18-pound lugs arriving between April 1 and April 19. Market News import statistics for the 2008 shipping season show that 18.82 million lugs of grapes were imported from Chile into Philadelphia from February 1 to April 19, with 28 percent (5.26 million) arriving between April 1 and April 19. After the April 20 start of the regulatory period, shipments dropped off dramatically and ended completely by June 4.

Fresh grapes imported prior to the beginning of the regulatory period are not subject to mandatory inspection but may be inspected on a voluntary basis. USDA's Fresh Products Branch, Fruit and Vegetable Programs (Fresh Products), is responsible for the performance of those voluntary inspections and compiles the inspection results data. Approximately 10 percent of the table grapes imported during the period April 1–19, 2008, were voluntarily inspected.

The grapes that are voluntarily inspected and fail to meet the Standards are not prohibited from entering into the channels of commerce in the U.S. By contrast, imported grapes that fail import quality requirements during the regulatory period must be reworked to meet the minimum requirements before being marketed in the U.S. Otherwise, failing product must be exported, destroyed, or utilized in processed products.

Under normal marketing conditions, imported grapes move directly through distribution channels into retail markets. However, when the supply of imported product exceeds demand, the imported grapes can be put into cold storage until the market is ready to absorb them. The length of time the grapes remain in storage likely has a negative effect on the quality of the grapes.

Studies of table grape importer storage behavior performed by SURRES, a division of the Applied Technology Corporation, and the College of Business and Management, University of Maryland, indicate that importers use their storage capability extensively during the March–April timeframes and that storage periods in the 30 to 60 day range are not uncommon at this time of year. Thus, the utilization of cold storage facilities in this manner creates a mechanism whereby grapes imported prior to the April 20 start of the regulatory period (product which is not subject to the marketing order requirements) may be held over in cold storage and subsequently enter the market after April 20, in competition with grapes that have passed inspection and met or exceeded the marketing order and import requirements.

Market News reports of commodity movement for the years 2000–2008 show that grape imports decrease dramatically soon after the start of the regulatory period. The amount of grapes imported during the regulatory period cannot account for the substantial quantity of imported grapes consistently present in the market in May and, sometimes, into June. Since few grapes are imported early in the regulatory period, many of the imported grapes available during the regulatory period have entered the country prior to the beginning of the regulatory period and have been held in cold storage and marketed during the regulatory period.

The Market News terminal market reports generally indicate that marginal quality and condition grapes command dramatically reduced prices in the market. In addition, those same reports indicate that grapes of better quality and condition tend to receive higher prices.

The April 10 regulatory period beginning date was implemented to ensure that imported and domestic grapes marketed during the regulatory period meet the minimum marketing order quality standards. This action is expected to reduce the quantity of unregulated imported grapes marketed during the regulatory period and to provide consumers with higher quality grapes on a more consistent basis. Experience has shown that an improvement in product quality results in increased acceptance in the marketplace and translates into more frequent purchases. USDA expects domestic producers and handlers of southeastern California grapes, as well as exporters and importers of foreign-produced grapes, to benefit from this action through stabilized marketing conditions and prices. The regulatory period change is anticipated to benefit the producers and marketers of both domestic and imported grapes, as well as grape consumers.

Clarification of Maturity Requirements

This rule also finalizes the modifications to § 944.503(a)(1)(ii) to clarify that imported Flame Seedless variety grapes shall be considered mature if the juice meets or exceeds 16.5 percent soluble solids, or contains not less than 15 percent soluble solids and the soluble solids are equal to or in excess of 20 parts to every part acid contained in the juice in accordance with applicable sampling and testing procedures specified in the California Code of Regulations (3 CCR 1436.3, 1436.5, 1463.6, 1436.7, 1436.12, and 1436.17). Prior to the implementation of the interim final rule, this subparagraph did not include the 16.5 percent option for meeting maturity requirements. In addition, obsolete language specifically regarding requirements in effect only in 1998 has been removed from paragraph (a)(1). These requirements are already in effect for grapes shipped from southeastern California under Marketing Order No. 925.

Final Regulatory Flexibility Impact Analysis

Pursuant to requirements set forth in the Regulatory Flexibility Act (RFA) (5 U.S.C. 601–612), the Agricultural Marketing Service (AMS) has considered the economic impact of this rule on small entities. Accordingly, AMS has prepared this final regulatory flexibility analysis.

The purpose of the RFA is to fit regulatory actions to the scale of business subject to such actions in order that small businesses will not be unduly or disproportionately burdened. Marketing orders issued pursuant to the Act, and the rules issued thereunder, are unique in that they are brought about through group action of essentially small entities acting on their own behalf. Thus, both statutes have small entity orientation and compatibility. Import regulations issued under the Act are comparable to those established under Federal marketing orders.

There are approximately 14 handlers of southeastern California grapes subject to regulation under the order and about 50 grape producers in the production area. In addition, there are approximately 123 importers of grapes. Small agricultural service firms are defined by the Small Business Administration (13 CFR 121.201) as those having annual receipts of less than $7,000,000, and small agricultural producers are defined as those whose annual receipts are less than $750,000. Nine of the 14 handlers subject to regulation have annual grape sales of less than $7 million. Based on data from the National Agricultural Statistics Service (NASS) and the Committee, the average crop value for 2008 is about $53,040,000. Dividing this figure by the number of producers (50) yields an average annual producer revenue estimate of about $1,060,800, which is above the SBA threshold of $750,000. Based on the foregoing, it may be concluded that a majority of grape handlers and none of the producers may be classified as small entities. The average importer receives $2,800,000 in revenue from the sale of grapes. Therefore, we believe that the majority

of these importers may also be classified as small entities.

Summary of Changes

This rule continues in effect the interim final rule published in the **Federal Register** on January 21, 2009 (74 FR 3412), that revised the regulatory periods when minimum grade, size, quality, and maturity requirements apply to grapes grown in southeastern California under the order, and to imported grapes under the table grape import regulation. The revised regulatory period also applies to pack and container requirements issued under the order. Prior to the action, the regulatory period for both domestic and imported grapes was April 20 through August 15 of each year.

The California Desert Grape Administrative Committee, which locally administers the order for grapes grown in a designated area of southeastern California, unanimously recommended changing the date when these requirements end for grapes grown in California to July 10. Moving the ending date of the regulatory period forward is in the interest of table grape handlers and producers. The Desert Grape Growers League of California requested that the beginning date of the regulatory period for imported grapes be changed from April 20 to April 1 and provided information to support its request. The League proposed this regulatory period change to reduce the quantity of unregulated imported grapes that are marketed during the regulatory period in competition with regulated grapes. The League believes that regulating product quality to meet minimum standards will result in increased acceptance of grapes in the marketplace, and is expected to translate into more frequent purchases on the part of the consumer.

After publishing a proposed rule and receiving comments, USDA subsequently determined that changing the beginning date of the regulatory period to April 10, as opposed to the April 1 date requested by the League, adequately addressed the League's concerns and was consistent with the provisions of the Act.

In addition, this finalizes the interim final rule that revised regulatory language in the grape import regulations to clarify maturity requirements on imported Flame Seedless variety grapes. Prior to the interim final rule, the regulation did not include the 16.5 percent option for meeting maturity requirements that has been in effect for grapes shipped from southeastern California under the order.

Changing the Ending of the Regulatory Period for Domestic and Imported Grapes

Section 925.52(a)(2) of the grape order provides authority to limit the handling of any grade, size, quality, maturity or pack of grapes differently for different varieties, or any combination of the foregoing during any period or periods.

Section 925.304 of the order's administrative rules and regulations stipulates the regulatory period when minimum grade, size, quality, and maturity requirements apply to grapes grown in southeastern California under the order. A final rule published on March 20, 1987 (52 FR 8865), established the original regulatory period to promote the orderly marketing of grapes.

Grape handlers in the production area shipped and marketed an average of 7.3 million 18-pound lugs of grapes annually from 2000–2008. Approximately 99 percent of those grapes were shipped and marketed during the period April 20 to July 10. At least 14 varieties are grown in the production area regulated under the order and marketed in major U.S. market areas. The four major varieties are Flame Seedless, Perlettes, Thompson Seedless, and Sugraone.

Since 1987, the amount of grapes handled after July 10 has decreased, and, in the period 2000–2008, the amount of grapes handled after July 10 constituted just slightly more than 1 percent of the grapes produced in the production area. The Committee met on November 14, 2002, and unanimously recommended modifying § 925.304 of the order's administrative rules and regulations to advance the date when minimum grade, size, quality, and maturity requirements expire to July 10, rather than August 15. The Committee met again on December 12, 2002, and clarified that the proposed regulatory period should also apply to pack and container requirements under the order.

The amount of grapes handled in the production area after July 10 of each year has generally decreased as older vineyards, which typically produce late season varieties, have been removed. During the past 3 years, approximately 99 percent of the grapes grown in the production area were handled during the period April 20 through July 10.

Grapes handled after July 10 tend to bring much lower prices than early season grapes. For example, in the 2003 season that followed the Committee recommendation, FOB prices for early season Flame Seedless grapes ranged from $13.85 to $23.85, while end-of-season Flame Seedless grape FOB prices ranged from $11.85 to $12.85 per 18-pound lug. In 2008, early season Flame Seedless prices ranged from $22.95 to $28.95 while the late season prices averaged $11.95 per 18-pound lug.

Additionally, inspection costs for grapes handled after July 10 are higher, as inspection fees are proportionate to the volume of grapes inspected. Thus, a shortened regulatory period is expected to benefit handlers and producers.

The Committee considered other regulatory period alternatives that would more adequately reflect the end of the harvest for the domestic production area but still ensure shipments of higher quality grapes. For example, one suggestion was to change the ending date of the regulatory period for grapes grown in the designated area of southeastern California to July 1 or July 5. This suggestion was not adopted because the Committee believes that July 10 is more reflective of the end of the season. Approximately one percent of grapes are shipped from the production area after July 10, but the industry felt that commercial quantities of grapes may still be shipped before that date and was not supportive of an earlier ending date.

Section 8e of the Act specifies that whenever certain specified commodities, including table grapes, are regulated under a Federal marketing order, imports of that commodity into the United States are prohibited unless they meet the same or comparable grade, size, quality, and maturity requirements as those in effect for the domestically produced commodity. Minimum grade, size, quality, and maturity requirements for table grapes imported into the United States are established under Table Grape Import Regulation 4 (7 CFR 944.503).

Section 944.503(a)(3) of the import regulation specifies the regulatory period during which imported grapes are subject to regulation. Prior to the interim final rule, the regulatory period was April 20 to August 15 of each year. Since that action changed the ending date of the regulatory period for the California production area to July 10, a corresponding change to the regulatory period for imported table grapes was required under section 8e of the Act.

Changing the Beginning of the Regulatory Period for Imported Grapes

The U.S. Census Bureau indicates that on average, for the years 2000–2008, 68 million 18-pound lugs of grapes were imported into the United States. The majority of these grapes are imported prior to April 20. Only grapes imported during the regulatory period are required to be inspected and to comply

with the same minimum grade, size, quality, and maturity requirements as the domestic marketing order.

The League requested that the beginning date of the regulatory period for imported grapes be advanced from April 20 to April 1, and submitted information to support its request to USDA for review and evaluation. After much consideration, USDA determined that changing the beginning date of the regulatory period to April 10 adequately addressed the League's concerns and was consistent with the provisions of the Act. The beginning date of the marketing order regulatory period was also changed to keep the import and domestic regulatory period dates the same.

The authority for changing the beginning date of the regulatory period for imports is specified in section 608e(b) of the Act. These provisions allow the Secretary to extend import requirements for a period, not to exceed 35 days, during which the import requirements would be effective for the imported commodity. To change the beginning date, USDA must consider the following: (1) For the prior year, whether imports of grapes that did not meet import requirements were marketed in the United States during the period that such import requirements were in effect; (2) whether imported grapes did or were likely to avoid such import requirements; and (3) whether there would be any adverse effect on the availability and prices of grapes if the regulatory period for imports was changed.

The League contends that such an action is needed to ensure that grapes imported into the United States prior to the beginning of the regulatory period, but marketed when the regulation is in effect, meet marketing order grade, size, quality, and maturity requirements.

Grape importers use cold storage extensively during the months of March and April. Storage periods in the 30–60 day range are not uncommon at this time of year. Much of the imported product available in the market during the regulatory period is believed to have been shipped prior to the beginning of the regulatory period and held in such facilities before shipping to terminal markets.

On average, 68.0 million 18-pound lugs of grapes were imported into the United States at all ports during each of the years 2000 to 2008. During each of those years, there was a significant decrease in imports after the April 20 beginning of the regulatory period. Approximately 3 million 18-pound lugs of imported grapes arrive each week of the shipping season prior to the April 20 beginning date of regulation. After April 20, shipments drop dramatically and usually cease altogether by May 31.

Market News reports show that shipments of imported Chilean grapes in 2008 mirror the pattern of previous years. An average of 3.25 million 18-pound lugs of grapes were imported each week of the season leading up to the April 20 start of regulation. For the week following the April 20 start date, shipments dropped to approximately 750,000 lugs per week. In the weeks that followed, shipments were 430,000 lugs, 372,000 lugs, and 78,000 lugs. Shipments continued to decrease to statistically insignificant quantities, ceasing completely after June 4, 2008.

Fresh Products data indicates that from 2004–2007, less than one percent of imported Chilean grapes were subject to inspection during the regulatory period, confirming that only limited quantities of Chilean grapes are imported after the import regulation takes effect. The majority of imports from Mexico are imported during the May-July period of each year subject to the import regulation requirements.

Market News terminal market reports for grapes for the years 2000–2008 indicate that imported table grapes are in the domestic market during May and June and that they compete with regulated grapes that are required to be inspected and certified as meeting minimum quality requirements. Given the small quantity of grapes imported during the early part of the regulatory period, it is presumed that the imported grapes available in the market during that time were imported prior to the start of the regulatory period and held over in cold storage.

USDA's Economic Research Service (ERS) studies indicate that low quality commodities can adversely affect the market for shippers of acceptable quality products. Quality requirements are typically used to cultivate a positive image of a consistent and reliable supplier of high-quality product. This results in consumer goodwill that strengthens demand and boosts producer prices. (USDA, Economic Research Service, Agricultural Economic Report Number 629, "Federal Marketing Orders for Fruits, Vegetables, Nuts, and Specialty Crops" by Nicholas J. Powers, March 1990; USDA, Economic Research Service, "Criteria for Evaluating Federal Marketing Orders: Fruits, Vegetables, Nuts, and Specialty Commodities" by Leo C. Polopolus, Hoy F. Carman, Edward V. Jesse, and James D. Shaffer, December 1986).

The presence of lower quality product in the marketplace, from any source, weakens demand for all products of that type. Market research and experience shows that consumers often purchase other commodities in place of the commodity with which they have had a bad quality experience. Decreasing demand ultimately has a negative effect on grower, handler, exporter, and importer returns.

The ERS report also discusses the purposes of quality standards. The basic rationale for such standards is that only satisfied customers are repeat customers. When consumers have a good quality experience, they make repeat purchases. Thus, quality standards help ensure that consumers are presented product that is of a known level of quality. It is in the interest of the grape industry to maintain consumer confidence by consistently offering high-quality product.

According to the League, countries that export table grapes to the European Union and Canada must meet minimum inspection requirements on a year-round basis. A number of these countries are the same as those who also export table grapes to the United States. Hence, a change in the effective date to April 10 should not dramatically adversely affect the availability of imported table grapes in the U.S. market, as the exporting countries have the ability to supply high-quality table grapes during this same time period. As an example, during the period April 1–19, 2004, FOB prices for imported grapes in U.S. markets ranged from $8 to $26 per package, depending on the date, condition, and size of the grapes. During the same period, Canadian FOB prices for imported grapes ranged from $12.03 to $33.98 and European Union prices ranged from $8 to $22 depending on the date, condition, and size of the grapes.

Better quality grapes tend to command higher prices. The increase in revenue could offset the added inspection costs of 3.8 cents per box for imported grapes checked at dockside. In 2000–2008, less than 1 percent of Chilean grapes required mandatory inspection. However, if inspection in these years had been mandatory as of April 10, about 7 percent would have been required to be inspected. It is anticipated that grape prices will be slightly higher as the quality level of grapes offered to consumers is increased.

Inspection fees will now be applicable to grapes imported during the April 10–19 period. These fees vary, depending on such factors as the location of the inspection, the size of the load to be inspected, and whether there are multiple commodities to be inspected. Current inspection fees for imported

grapes are 3.8 cents per package when inspected at dockside. When the inspection is performed at a location other than dockside, the fees range from $69 to $151 per car lot (approximately 45,000 pounds), depending on the number of packages in the load. (See *http://www.ams.usda.gov/AMSv1.0/getfile?dDocName=STELPRDC5065795* for inspection fee information.)

With prices for imported grapes ranging from $6 to mostly $44 per package, depending on the month, condition, and size of the grapes, inspection fees are anticipated to be less than 1 percent of the value of the grapes imported during this period of time.

The benefits and costs associated with changing the dates when grade, size, quality, and maturity requirements apply to grapes grown in a designated area of southeastern California and to imported grapes under the grape import regulation are not expected to be disproportionately larger or smaller for small importers than for large importers, nor for small handlers or producers than for larger entities.

A number of alternatives to an April 10 regulatory period start date were considered prior to the implementation of the interim final rule, including leaving the April 20 beginning date of the regulatory period unchanged, and setting an earlier beginning date (April 1 per the League's request).

There is clear evidence that the April 20 start date has allowed unregulated imported grapes to compete in the marketplace with regulated grapes, negatively impacting domestic producers and handlers. Maintaining the status quo in relation to the regulatory period start date was not deemed to be a viable option.

An April 1 regulatory period start date, as originally proposed by the League, would certainly have addressed the problem, but may have also created some unintended consequences. The imported grape industry felt that an April 1 start date would have created undue economic hardship for the industry and may have ultimately resulted in curtailed shipments.

The April 10 regulatory period start date addressed the concerns of the domestic grape industry, while not excessively burdening the imported grape industry. An April 10 beginning date is expected to improve the quality of imported and domestic grapes available to consumers, lessen the chances of unregulated imported grapes being in the market during the regulatory period in competition with regulated grapes, and, ultimately, be in the best interest of all grape handlers, producers, importers, and consumers.

AMS is committed to compliance with the E-Government Act, to promote the use of the Internet and other information technologies to provide increased opportunities for citizen access to Government information and services, and for other purposes.

This rule will not impose any additional reporting or recordkeeping requirements on either small or large grape handlers or importers. As with all Federal marketing order programs, reports and forms are periodically reviewed to reduce information requirements and duplication by industry and public sector agencies. In addition, USDA has not identified any relevant Federal rules that duplicate, overlap, or conflict with this final rule.

The Committee's meetings were widely publicized throughout the grape industry and all interested persons were invited to attend the meetings and participate in Committee deliberations. Like all Committee meetings, the November 14, 2002, and the December 12, 2002, meetings were public meetings and all entities, both large and small, were able to express their views on changing the marketing order regulatory period. Also, the World Trade Organization, the Chilean Technical Barriers to Trade (TBT) inquiry point for notifications under the U.S.-Chile Free Trade Agreement, the embassies of Argentina, Brazil, Canada, Chile, Italy, Mexico, Peru, and South Africa, and known grape importers were notified of the proposed and interim final rules. Finally, interested persons were invited to submit comments on the interim final rule, including the regulatory and informational impacts of this action on small businesses.

An interim final rule was published in the **Federal Register** on January 21, 2009 (74 FR 3412). Copies of the rule were mailed by the Board's staff to all Committee members and grape handlers. In addition, the rule was made available through the Internet by USDA and the Office of the Federal Register. A 60-day comment period ending March 23, 2009, was provided to allow interested persons to respond to the rule.

Previously Published Proposed Rule

In addition, prior to the publication of the interim final rule, a proposed rule concerning this action was published in the **Federal Register** on May 25, 2005 (70 FR 30001). That proposed rule was subsequently reopened five times for further comments on July 25, 2005 (70 FR 42513), on September 27, 2005 (70 FR 56378), on July 11, 2006 (71 FR 39019), on October 25, 2007 (72 FR 60588), and on December 13, 2007 (72 FR 70811). Copies of the rule were mailed or sent via facsimile to all Committee members and grape handlers, and the rule was made available through the Internet at *http://www.regulations.gov.*

A total of seven comment periods (five 60-day comment periods, a 30-day comment period, and a 15-day comment period) have been provided to allow interested persons to respond to the proposed action. The last comment period ended March 23, 2009.

In total, USDA received 161 comments related to the proposed rule. Comments were broken down as follows: 20 comments were in support of the proposal and 141 in opposition; 112 of the comments originated from foreign sources and 49 from domestic sources. Fifteen of the comments were in relation to extending the comment period or requests for additional information. The comments received were primarily directed towards discussion of the proposed change to the beginning date of the regulatory period. There were no comments in opposition to the proposed change to the ending date of the regulatory period or to the proposed change of the maturity requirements in the import regulation.

Twenty comments were submitted in full support of the proposed changes during the proposed rule comment period. The comments were submitted by domestic grape producers and handlers, associations related to the domestic grape industry, domestic agricultural service firms, and members of the U.S. Congress.

USDA received a total of 141 comments in opposition to the proposal during the proposed rule comment period and subsequent five reopenings. Fourteen of the comments were in relation to extending the comment period or requests for additional information, 106 were so similar in style and content as to be considered form letters, and the remaining 21 were unique submissions. The commenters represented foreign grape producers, foreign grape producer associations, shippers, importers, exporters, and maritime affiliates that are directly involved in the importation of foreign produced grapes into the U.S.

The opposition comments that had material bearing on the previously published proposed rule may be summarized into the following four categories: (1) The proposed change in the beginning effective date contravenes the mandates set forth in the Act; (2) the proposed rule fails to supply a reasoned analysis to rescind the 1987 finding that a change of the beginning effective date

for Marketing Order 925 and Import Regulation 4 to a date before April 20 would constitute an unnecessary regulation of imports at a time when domestic shipments would appear to be remote; (3) the proposed beginning effective date of April 1 is contrary to the declared administrative policy of the AMS/USDA; and (4) the proposed rule imposes marketing order standards on Chilean supplies when no domestic varieties are available, and therefore allegedly constitutes a non-tariff barrier contrary to the terms of WTO Agreements and the U.S.-Chile Free Trade Agreement and assesses inspection fees starting April 1 when no domestic supplies are being so charged, thereby allegedly violating Article III and Article VIII of GATT 1994. These comments were addressed in the interim final rule.

Interim Final Rule

The interim final rule was published in the **Federal Register** on January 21, 2009. This rule revised the regulatory period when minimum grade, size, quality, and maturity requirements apply to southeastern California grapes under the order and to imported grapes under the table grape import regulations, from April 20 through August 15 of each year to April 10 through July 10 of each year. The action also clarified the maturity requirement for southeastern California and imported Flame Seedless variety grapes. A 60-day comment period was provided to allow interested persons to respond to the interim final rule.

Five comments were received during the comment period—one in support of the action and four in opposition. The one comment in support of the action was received from an organization representing domestic grape producers. The commenter agreed with the determinations made by USDA and was in full support of finalization of the interim final rule.

Four comments were received in opposition to the action taken in the interim final rule. The opposition comments were received from a domestic consumer, a grape importer, a domestic maritime trade association, and a foreign association of importers. Except for the domestic consumer who objected to marketing orders in general, including the grape marketing order, the opposition comments were received from persons who had commented previously concerning the proposed rule. These commenters raised issues that were the same or substantially the same as those raised in their earlier comments on the proposed rule.

As in their previous comments, the commenters in opposition to the interim final rule maintained that the action violated the criteria set forth in the Act for such action and lacked the required statistical evidence from "the previous year." The commenters also charged that there was deficient or irrelevant evidence in support of the action, rebutted allegations of poor quality of grape imports being imported immediately prior to the regulatory period, and asserted that grape imports would be curtailed. Virtually all of the commenters in opposition stated that the imported grape industry would suffer negative economic impacts as a result of such action. In addition, opposition commenters asserted that the action violated previous rulemaking findings, that the action contravenes departmental policy determinations dating back to 1982, and that the action constituted a breach of various trade agreements entered into by the U.S. Government.

USDA disagrees with the contentions raised in the opposition comments. Further, USDA believes that this rulemaking action fully adheres to the requirements of the Act to take such action. USDA has sought to collect, present, analyze, and consider evidence that is both current and relevant, as is required by the Act. The proposed rule, the reopening of the comment period to present updated statistical data, and the interim final rule presented appropriate statistical justification for this action and are in compliance with the governing statures. In addition, USDA rejects the opposition commenters' contention that any statutory or procedural errors were committed during the course of this rulemaking process. USDA believes that all statutes, policies, and procedures of the federal government have been strictly adhered to.

Likewise, USDA believes that this action is not contrary to any previous actions, decision, agreements, or treaties binding on the U.S. Government. Accordingly, no changes will be made in the finalization of the interim final rule.

Finally, one opposition commenter raised concern regarding the issue of grape varieties subject to exemption under the marketing order regulations. However, the issue of exempt varieties requires separate review and consideration.

A small business guide on complying with fruit, vegetable, and specialty crop marketing agreements and orders may be viewed at: *http://www.ams.usda.gov/AMSv1.0/ams.fetchTemplateData.do?template=TemplateN&page=MarketingOrdersSmallBusinessGuide.* Any questions about the compliance guide should be sent to Jay Guerber at the previously mentioned address in the **FOR FURTHER INFORMATION CONTACT** section.

In accordance with section 8e of the Act, USTR has concurred with the issuance of this final rule.

After consideration of all relevant material presented, including the information and recommendation submitted by the Committee and other available information, it is hereby found that finalizing the interim final rule, without change, as published in the **Federal Register** (74 FR 3412, January 21, 2009) will tend to effectuate the declared policy of the Act. Pursuant to 5 U.S.C. 553, it is also found and determined that good cause exists for not postponing the effective date of this action until 30 days after publication in the **Federal Register** because: (1) The immediate implementation of this rule is necessary for importers to make marketing decisions and to contract in advance for shipping; (2) handlers and importers are aware of this rule; (3) an interim final rule was published in the **Federal Register** on January 21, 2009 (74 FR 3412); and (4) the interim final rule is finalized without change.

List of Subjects

7 CFR Part 925

Grapes, Marketing agreements, Reporting and recordkeeping requirements.

7 CFR Part 944

Avocados, Food grades and standards, Grapefruit, Grapes, Imports, Kiwifruit, Limes, Olives, Oranges.

PART 925—GRAPES GROWN IN A DESIGNATED AREA OF SOUTHEASTERN CALIFORNIA

■ Accordingly, the interim final rule amending 7 CFR part 925 which was published at 74 FR 3412 on January 21, 2009, is adopted as a final rule without change.

PART 944—FRUITS; IMPORT REGULATIONS

■ Accordingly, the interim final rule amending 7 CFR part 944 which was published at 74 FR 3412 on January 21, 2009, is adopted as a final rule without change.

Dated: February 2, 2010.

Rayne Pegg,

Administrator, Agricultural Marketing Service.

[FR Doc. 2010–2542 Filed 2–4–10; 8:45 am]

BILLING CODE P

DEPARTMENT OF HEALTH AND HUMAN SERVICES

Food and Drug Administration

21 CFR Part 73

[Docket No. FDA–2007–C–0456] (formerly Docket No. 2007C–0245)

Listing of Color Additives Exempt From Certification; Paracoccus Pigment; Confirmation of Effective Date

AGENCY: Food and Drug Administration, HHS.

ACTION: Final rule; confirmation of effective date.

SUMMARY: The Food and Drug Administration (FDA) is confirming the effective date of December 17, 2009, for the final rule that appeared in the **Federal Register** of November 16, 2009. The final rule amended the color additive regulations to provide for the safe use of paracoccus pigment as a color additive in the feed of salmonid fish to enhance the color of their flesh.

DATES: The effective date for the final rule that published in the **Federal Register** on November 16, 2009 (74 FR 58843) is confirmed as December 17, 2009.

FOR FURTHER INFORMATION CONTACT: Mical E. Honigfort, Center for Food Safety and Applied Nutrition (HFS–265), Food and Drug Administration, 5100 Paint Branch Pkwy., College Park, MD 20740–3835, 301–436–1278.

SUPPLEMENTARY INFORMATION: In the **Federal Register** of November 16, 2009 (74 FR 58843), FDA amended the color additive regulations to add 21 CFR 73.352 to provide for the safe use of paracoccus pigment as a color additive in the feed of salmonid fish to enhance the color of their flesh.

FDA gave interested persons until December 16, 2009, to file objections or requests for a hearing. The agency received no objections or requests for a hearing on the final rule. Therefore, FDA finds that the effective date of the final rule that published in the **Federal Register** of November 16, 2009, should be confirmed.

List of Subjects in 21 CFR Part 73

Color additives, Cosmetics, Drugs, Medical devices.

■ Therefore, under the Federal Food, Drug, and Cosmetic Act (21 U.S.C. 321, 341, 342, 343, 348, 351, 352, 355, 361, 362, 371, 379e) and under authority delegated to the Commissioner of Food and Drugs, and redelegated to the Director, Office of Food Additive Safety, notice is given that no objections or requests for a hearing were filed in response to the November 16, 2009, final rule. Accordingly, the amendments issued thereby became effective December 17, 2009.

Dated: January 22, 2010.

Mitchell A. Cheeseman,

Acting Director, Office of Food Additive Safety, Center for Food Safety and Applied Nutrition.

[FR Doc. 2010–2521 Filed 2–4–10; 8:45 am]

BILLING CODE 4160–01–S

DEPARTMENT OF HEALTH AND HUMAN SERVICES

Food and Drug Administration

21 CFR Part 73

[Docket No. FDA–2007–C–0044] (formerly Docket No. 2007C–0474)

Listing of Color Additives Exempt From Certification; Astaxanthin Dimethyldisuccinate; Confirmation of Effective Date

AGENCY: Food and Drug Administration, HHS.

ACTION: Final rule; confirmation of effective date.

SUMMARY: The Food and Drug Administration (FDA) is confirming the effective date of December 8, 2009, for the final rule that appeared in the **Federal Register** of November 5, 2009. The final rule amended the color additive regulations to provide for the safe use of astaxanthin dimethyldisuccinate as a color additive in the feed of salmonid fish to enhance the color of their flesh.

DATES: The effective date for the final rule published in the **Federal Register** of November 5, 2009 (74 FR 57248) is confirmed as December 8, 2009.

FOR FURTHER INFORMATION CONTACT: Felicia M. Ellison, Center for Food Safety and Applied Nutrition (HFS–265), Food and Drug Administration, 5100 Paint Branch Pkwy., College Park, MD 20740–3835, 301–436–1264.

SUPPLEMENTARY INFORMATION: In the **Federal Register** of November 5, 2009 (74 FR 57248), FDA amended the color additive regulations to add § 73.37 (21 CFR 73.37) to provide for the safe use of astaxanthin dimethyldisuccinate as a color additive in the feed of salmonid fish to enhance the color of their flesh.

FDA gave interested persons until December 7, 2009, to file objections or requests for a hearing. The agency received no objections or requests for a hearing on the final rule. Therefore, FDA finds that the effective date of the final rule that published in the **Federal Register** of November 5, 2009, should be confirmed.

List of Subjects in 21 CFR Part 73

Color additives, Cosmetics, Drugs, Medical devices.

■ Therefore, under the Federal Food, Drug, and Cosmetic Act (21 U.S.C. 321, 341, 342, 343, 348, 351, 352, 355, 361, 362, 371, 379e) and under authority delegated to the Commissioner of Food and Drugs, and redelegated to the Director, Office of Food Additive Safety, notice is given that no objections or requests for a hearing were filed in response to the November 5, 2009, final rule. Accordingly, the amendments issued thereby became effective December 8, 2009.

Dated: January 22, 2010.

Mitchell A. Cheeseman,

Acting Director, Office of Food Additive Safety, Center for Food Safety and Applied Nutrition.

[FR Doc. 2010–2522 Filed 2–4–10; 8:45 am]

BILLING CODE 4160–01–S

DEPARTMENT OF HEALTH AND HUMAN SERVICES

Food and Drug Administration

21 CFR Part 558

[Docket No. FDA–2010–N–0002]

New Animal Drugs for Use in Animal Feeds; Ractopamine; Monensin

AGENCY: Food and Drug Administration, HHS.

ACTION: Final rule.

SUMMARY: The Food and Drug Administration (FDA) is amending the animal drug regulations to reflect approval of an original new animal drug application (NADA) filed by Elanco Animal Health, A Division of Eli Lilly & Co. The NADA provides for use of single-ingredient Type A medicated articles containing ractopamine hydrochloride and monensin to formulate two-way combination Type C medicated feeds for finishing hen and tom turkeys.

DATES: This rule is effective February 5, 2010.

FOR FURTHER INFORMATION CONTACT: Linda M. Wilmot, Center for Veterinary Medicine (HFV–120), Food and Drug Administration, 7500 Standish Pl., Rockville, MD 20855, 240–276–8101, e-mail: *linda.wilmot@fda.hhs.gov*.

SUPPLEMENTARY INFORMATION: Elanco Animal Health, A Division of Eli Lilly

& Co., Lilly Corporate Center, Indianapolis, IN 46285, filed NADA 141–301 for use of TOPMAX (ractopamine hydrochloride) and COBAN (monensin, USP) single-ingredient Type A medicated articles to formulate two-way combination Type C medicated feeds for finishing hen and tom turkeys. The NADA is approved as of December 11, 2009, and the regulations in 21 CFR 558.500 are amended to reflect the approval.

In accordance with the freedom of information provisions of 21 CFR part 20 and 21 CFR 514.11(e)(2)(ii), a summary of safety and effectiveness data and information submitted to support approval of this application may be seen in the Division of Dockets Management (HFA–305), Food and Drug Administration, 5630 Fishers Lane, rm. 1061, Rockville, MD 20852, between 9 a.m. and 4 p.m., Monday through Friday.

The agency has determined under 21 CFR 25.33 that this action is of a type that does not individually or cumulatively have a significant effect on the human environment. Therefore, neither an environmental assessment nor an environmental impact statement is required.

This rule does not meet the definition of "rule" in 5 U.S.C. 804(3)(A) because it is a rule of "particular applicability." Therefore, it is not subject to the congressional review requirements in 5 U.S.C. 801–808.

List of Subjects in 21 CFR Part 558

Animal drugs, Animal feeds.

■ Therefore, under the Federal Food, Drug, and Cosmetic Act and under the authority delegated to the Commissioner of Food and Drugs and redelegated to the Center for Veterinary Medicine, 21 CFR part 558 is amended as follows:

PART 558—NEW ANIMAL DRUGS FOR USE IN ANIMAL FEEDS

■ 1. The authority citation for 21 CFR part 558 continues to read as follows:

Authority: 21 U.S.C. 360b, 371.

■ 2. In § 558.500, add paragraphs (e)(3)(iii) and (e)(3)(iv) to read as follows:

§ 558.500 Ractopamine.

* * * * *

(e) * * *

(3) * * *

Ractopamine in grams/ton	Combination in grams/ton	Indications for use	Limitations	Sponsor
*	*	*	*	*
(iii) 4.6 to 11.8 (5 to 13 ppm)	Monensin 54 to 90	Finishing hen turkeys: As in paragraph (e)(3)(i) of this section; and for the prevention of coccidiosis in growing turkeys caused by *Eimeria adenoeides*, *E. meleagrimitis* and *E. gallopavonis*.	Feed continuously as sole ration during the last 7 to 14 days prior to slaughter. See § 558.355(d).	000986
(iv) 4.6 to 11.8 (5 to 13 ppm)	Monensin 54 to 90	Finishing tom turkeys: As in paragraph (e)(3)(ii) of this section; and for the prevention of coccidiosis in growing turkeys caused by *Eimeria adenoeides*, *E. meleagrimitis* and *E. gallopavonis*.	Feed continuously as sole ration during the last 14 days prior to slaughter. Feeding ractopamine to tom turkeys during periods of excessive heat can result in increased mortality. See § 558.355(d).	000986

Dated: February 1, 2010.

Bernadette Dunham,

Director, Center for Veterinary Medicine.

[FR Doc. 2010–2427 Filed 2–4–10; 8:45 am]

BILLING CODE 4160–01–S

DEPARTMENT OF HOUSING AND URBAN DEVELOPMENT

24 CFR Parts 3280 and 3282

[Docket No. FR–5343–IN–01]

RIN 2502–AI77

Federal Manufactured Home Construction and Safety Standards and Other Orders: HUD Statements That Are Subject to Consensus Committee Processes

AGENCY: Office of the Assistant Secretary for Housing—Federal Housing Commissioner, HUD.

ACTION: Interpretive rule.

SUMMARY: The National Manufactured Housing Construction and Safety Standards Act of 1974 provides that certain classes of statements by HUD relating to manufactured housing requirements are subject to proposal, review, and comment processes involving a consensus committee. The consensus committee includes representatives of manufactured housing producers and users, as well as general interest and public officials. This rule interprets the statutory requirement to clarify the types of statements that are subject to the proposal, review, and comment processes.

DATES: *Effective Date:* February 5, 2010.

FOR FURTHER INFORMATION CONTACT: William W. Matchneer III, Associate Deputy Assistant Secretary for Regulatory Affairs and Manufactured Housing, Office of Manufactured Housing Programs, Department of Housing and Urban Development, 451 Seventh Street, SW., Room 9164, Washington, DC 20410; telephone number 202–708–6401 (this is not a toll-free number). Persons with hearing or speech impairments may access this number via TTY by calling the toll-free Federal Information Relay Service at 1–800–877–8339.

SUPPLEMENTARY INFORMATION:

I. Background

The National Manufactured Housing Construction and Safety Standards Act of 1974 (42 U.S.C. 5401–5426) ("the Act"), as amended by the Manufactured Housing Improvement Act of 2000 (Title VI, Pub. L. 106–659), provides for the establishment and revision of Federal construction and safety standards for manufactured housing, as well as for procedural and enforcement regulations and interpretive bulletins related to implementation of these standards.

Section 604(a) of the Act provides, among other things, the process for the development, proposal, and issuance of revisions of Federal construction and safety standards, which govern the construction, design, and performance of a manufactured home. Section 604(a) establishes a consensus committee, which is comprised of representatives of manufactured housing producers and

users, as well as general interest and public officials. Section 604(a)(3)(A) provides that the consensus committee shall:

(i) Provide periodic recommendations to the Secretary to adopt, revise, and interpret the Federal manufactured housing construction and safety standards in accordance with this subsection;

(ii) Provide periodic recommendations to the Secretary to adopt, revise, and interpret the procedural and enforcement regulations, including regulations specifying the permissible scope and conduct of monitoring in accordance with subsection (b) of this section;

(iii) Be organized and carry out its business in a manner that guarantees a fair opportunity for the expression and consideration of various positions and for public participation; and

(iv) Be deemed to be an advisory committee not composed of Federal employees. HUD has by regulation expanded the role of the consensus committee beyond that required under the Act. Although the Act provided that the consensus committee was to develop the original proposed model installation standards for manufactured housing, HUD has provided in 24 CFR 3285.1(c) that whenever HUD proposes to revise the model installation standards, it will also seek input and comment from the consensus committee. Similarly, HUD has provided in 24 CFR 3288.305 that it will seek input from the consensus committee whenever it proposes to revise the manufactured housing dispute resolution regulations.

In accordance with section 604(a) of the Act, the consensus committee may submit to HUD proposals to revise the Federal construction and safety standards, and HUD may either publish recommended standards for notice and public comment, or publish a standard along with its reasons for rejecting the standard. Upon consideration of any public comments, the consensus committee must provide HUD with any proposed revised standards, which HUD must in turn publish with either a description of the circumstances under which the proposed revised standard could become effective or, alternatively, HUD's reasons for rejecting the proposed revised standard. HUD must then adopt, modify, or reject any proposed standards through procedures and within the time frames specified in subsection 604(a).

Section 604(b) of the Act provides, among other things, the process for issuance of "other orders," which consist of procedural and enforcement regulations and interpretive bulletins. Interpretive bulletins clarify the meaning of Federal manufactured home construction and safety standards, procedural regulations, and enforcement regulations. Before HUD issues a procedural regulation, enforcement regulation, or interpretive bulletin, it must submit its proposed regulation or interpretive bulletin to the consensus committee for review and comment. HUD may accept or reject any consensus committee comments, but upon doing so, it must publish for public notice and comment the proposed regulation or interpretive bulletin, along with the consensus committee's comments and HUD's responses to the consensus committee's comments. The consensus committee may also submit its own proposed procedural regulations, enforcement regulations, and interpretive bulletins to HUD. Upon receiving such a proposal from the consensus committee, HUD must either approve the proposal and publish it for public notice and comment, or reject the proposal and publish it along with its reasons for the rejection and any recommended modifications.

Section 604(b)(6) of the Act is entitled "Changes" and reads in its entirety as follows:

> Any statement of policies, practices, or procedures relating to construction and safety standards, regulations, inspections, monitoring, or other enforcement activities that constitutes a statement of general or particular applicability to implement, interpret, or prescribe law or policy by the Secretary is subject to [section 604(a)] or this [section 604(b)]. Any change adopted in violation of [section 604(a)] or this [section 604(b)] is void.

Some questions have arisen within the consensus committee over what statements by HUD fall within the scope of section 604(b)(6). For example, some have asserted that the consensus committee has broad jurisdiction and authority over all aspects of HUD's manufactured housing program, such that HUD's internal budgets, contract decisions, and determinations whether to take enforcement action must be made or approved in advance by the consensus committee. HUD is concerned that such assertions may lead to confusion among members of the public, which is routinely invited to attend consensus committee meetings, with regard to the consensus committee's role. Accordingly, HUD is issuing this interpretive rule to clarify the scope of section 604(b)(6)'s coverage.

II. This Interpretive Rule

This rule interprets the scope of section 604(b)(6) to clarify the types of statements by HUD to which the section applies. HUD notes that in specifying which statements "relating to construction and safety standards, regulations, inspections, monitoring, or other enforcement activities" are subject to section 604(a) or (b), section 604(b)(6) uses language that is nearly identical to that found in the Administrative Procedure Act's (5 U.S.C. 551 *et seq.*) (the APA) definition of a "rule." The APA definition states, in pertinent part:

> "Rule" means the whole or a part of an agency statement of general or particular applicability and future effect designed to implement, interpret, or prescribe law or policy or describing the organization, procedure, or practice requirements of an agency." (5 U.S.C. 551(4))

Over the 63 years since enactment of the APA, courts have developed extensive case law interpreting the APA's definition of a rule. (*See, e.g.,* Jeffery S. Lubbers, *A Guide to Federal Agency Rulemaking,* 4th ed., (2006), pp. 49–126.) HUD will not attempt to summarize this case law in this interpretive rule, but views section 604(b)(6) as demonstrating Congress's intent to incorporate the APA's definition of a rule as developed by the courts, except to the extent that section 604(b)(6) deviates substantively from the APA definition. HUD notes that the only substantive difference between the scope of section 604(b)(6) and the APA's definition of a rule is that section 604(b)(6) excludes from coverage statements describing agency organization. Although section 604(b)(6) does not repeat the APA definition's express provision that the statement be one "of future effect," HUD does not interpret this difference as a substantive one, since virtually any statement that "implements, interprets, or prescribes law or policy" is necessarily a statement of future effect. Finally, the scope of section 604(b)(6) is limited by its own terms to statements relating to manufactured housing "construction and safety standards, regulations, inspections, monitoring, or other enforcement activities" that amount to a "change." Statements relating to other matters, including interpretation of other matters covered by the Act, statements that merely summarize or repeat the substance of prior statements or practices, and statements that merely provide guidance, are beyond the scope of section 604(b)(6).

Accordingly, HUD interprets the scope of section 604(b)(6) to include only statements by HUD that:

(1) Relate to manufactured housing construction and safety standards, regulations, inspections, monitoring, or other enforcement activities;

(2) Meet the definition of a "rule" under the APA and applicable case law, except that statements describing agency organization are not included; and

(3) Constitute a change from prior HUD statements or practice on the same subject matter.

III. Findings and Certifications

Environmental Impact

This final rule does not direct, provide for assistance or loan and mortgage insurance for, or otherwise govern or regulate real property acquisition, disposition, leasing, rehabilitation, alteration, demolition, or new construction; or establish, revise, or provide for standards for construction or construction materials, manufactured housing, or occupancy. Accordingly, under 24 CFR 50.19(c)(1), this rule is categorically excluded from environmental review under the National Environmental Policy Act of 1969 (42 U.S.C. 4321).

List of Subjects

24 CFR Part 3280

Fire prevention, Housing standards.

24 CFR Part 3282

Administrative practice and procedure, Consumer protection, Intergovernmental relations, Investigations, Manufactured homes, Reporting and recordkeeping requirements.

Dated: January 27, 2010.

David H. Stevens,

Assistant Secretary for Housing—Federal Housing Commissioner.

[FR Doc. 2010–2571 Filed 2–4–10; 8:45 am]

BILLING CODE 4210–67–P

DEPARTMENT OF HOMELAND SECURITY

Federal Emergency Management Agency

44 CFR Part 64

[Docket ID FEMA–2010–0003; Internal Agency Docket No. FEMA–8115]

Suspension of Community Eligibility

AGENCY: Federal Emergency Management Agency, DHS.

ACTION: Final rule.

SUMMARY: This rule identifies communities, where the sale of flood insurance has been authorized under the National Flood Insurance Program (NFIP), that are scheduled for suspension on the effective dates listed within this rule because of noncompliance with the floodplain management requirements of the program. If the Federal Emergency Management Agency (FEMA) receives documentation that the community has adopted the required floodplain management measures prior to the effective suspension date given in this rule, the suspension will not occur and a notice of this will be provided by publication in the **Federal Register** on a subsequent date.

DATES: *Effective Dates:* The effective date of each community's scheduled suspension is the third date ("Susp.") listed in the third column of the following tables.

FOR FURTHER INFORMATION CONTACT: If you want to determine whether a particular community was suspended on the suspension date or for further information, contact David Stearrett, Mitigation Directorate, Federal Emergency Management Agency, 500 C Street, SW., Washington, DC 20472, (202) 646–2953.

SUPPLEMENTARY INFORMATION: The NFIP enables property owners to purchase flood insurance which is generally not otherwise available. In return, communities agree to adopt and administer local floodplain management aimed at protecting lives and new construction from future flooding. Section 1315 of the National Flood Insurance Act of 1968, as amended, 42 U.S.C. 4022, prohibits flood insurance coverage as authorized under the NFIP, 42 U.S.C. 4001 *et seq.;* unless an appropriate public body adopts adequate floodplain management measures with effective enforcement measures. The communities listed in this document no longer meet that statutory requirement for compliance with program regulations, 44 CFR part 59. Accordingly, the communities will be suspended on the effective date in the third column. As of that date, flood insurance will no longer be available in the community. However, some of these communities may adopt and submit the required documentation of legally enforceable floodplain management measures after this rule is published but prior to the actual suspension date. These communities will not be suspended and will continue their eligibility for the sale of insurance. A notice withdrawing the suspension of the communities will be published in the **Federal Register.**

In addition, FEMA has identified the Special Flood Hazard Areas (SFHAs) in these communities by publishing a Flood Insurance Rate Map (FIRM). The date of the FIRM, if one has been published, is indicated in the fourth column of the table. No direct Federal financial assistance (except assistance pursuant to the Robert T. Stafford Disaster Relief and Emergency Assistance Act not in connection with a flood) may legally be provided for construction or acquisition of buildings in identified SFHAs for communities not participating in the NFIP and identified for more than a year, on FEMA's initial flood insurance map of the community as having flood-prone areas (section 202(a) of the Flood Disaster Protection Act of 1973, 42 U.S.C. 4106(a), as amended). This prohibition against certain types of Federal assistance becomes effective for the communities listed on the date shown in the last column. The Administrator finds that notice and public comment under 5 U.S.C. 553(b) are impracticable and unnecessary because communities listed in this final rule have been adequately notified.

Each community receives 6-month, 90-day, and 30-day notification letters addressed to the Chief Executive Officer stating that the community will be suspended unless the required floodplain management measures are met prior to the effective suspension date. Since these notifications were made, this final rule may take effect within less than 30 days.

National Environmental Policy Act. This rule is categorically excluded from the requirements of 44 CFR part 10, Environmental Considerations. No environmental impact assessment has been prepared.

Regulatory Flexibility Act. The Administrator has determined that this rule is exempt from the requirements of the Regulatory Flexibility Act because the National Flood Insurance Act of 1968, as amended, 42 U.S.C. 4022, prohibits flood insurance coverage unless an appropriate public body adopts adequate floodplain management measures with effective enforcement measures. The communities listed no longer comply with the statutory requirements, and after the effective date, flood insurance will no longer be available in the communities unless remedial action takes place.

Regulatory Classification. This final rule is not a significant regulatory action under the criteria of section 3(f) of Executive Order 12866 of September 30, 1993, Regulatory Planning and Review, 58 FR 51735.

Executive Order 13132, Federalism. This rule involves no policies that have federalism implications under Executive Order 13132.

Executive Order 12988, Civil Justice Reform. This rule meets the applicable standards of Executive Order 12988.

Paperwork Reduction Act. This rule does not involve any collection of information for purposes of the Paperwork Reduction Act, 44 U.S.C. 3501 *et seq.*

List of Subjects in 44 CFR Part 64

Flood insurance, Floodplains.

■ Accordingly, 44 CFR part 64 is amended as follows:

PART 64—[AMENDED]

■ 1. The authority citation for part 64 continues to read as follows:

Authority: 42 U.S.C. 4001 *et seq.;* Reorganization Plan No. 3 of 1978, 3 CFR, 1978 Comp.; p. 329; E.O. 12127, 44 FR 19367, 3 CFR, 1979 Comp.; p. 376.

§ 64.6 [Amended]

■ 2. The tables published under the authority of § 64.6 are amended as follows:

State and location	Community No.	Effective date authorization/cancellation of sale of flood insurance in community	Current effective map date	Date certain federal assistance no longer available in SFHAs
Region IV				
Alabama:				
Cherokee, City of, Colbert County	010208	January 17, 1974, Emerg; September 28, 1979, Reg; February 17, 2010, Susp.	Apr. 17, 2010	Apr. 17, 2010.
Colbert County, Unincorporated Areas	010318	July 9, 1981, Emerg; July 9, 1981, Reg; February 17, 2010, Susp.	do*	Do.
Dallas County, Unincorporated Areas	010063	April 11, 1975, Emerg; September 29, 1986, Reg; February 17, 2010, Susp.	do	Do.
Leighton, City of, Colbert County	010046	January 17, 1974, Emerg; August 19, 1985, Reg; February 17, 2010, Susp.	do	Do.
Littleville, Town of, Colbert County	010330	October 25, 1977, Emerg; November 24, 1978, Reg; February 17, 2010, Susp.	do	Do.
Muscle Shoals, City of, Colbert County	010047	January 30, 1974, Emerg; December 15, 1977, Reg; February 17, 2010, Susp.	do	Do.
Selma, City of, Dallas County	010065	May 7, 1974, Emerg; March 4, 1986, Reg; February 17, 2010, Susp.	do	Do.
Sheffield, City of, Colbert County	010048	January 10, 1974, Emerg; December 15, 1977, Reg; February 17, 2010, Susp.	do	Do.
Tuscumbia, City of, Colbert County	010049	November 27, 1973, Emerg; December 1, 1977, Reg; February 17, 2010, Susp.	do	Do.
Valley Grande, City of, Dallas County	010312	N/A, Emerg; June 8, 2004, Reg; February 17, 2010, Susp.	do	Do.
Kentucky:				
Clay City, City of, Powell County	210195	March 22, 1976, Emerg; September 6, 1989, Reg; February 17, 2010, Susp.	do	Do.
Powell County, Unincorporated Areas	210194	November 1, 1976, Emerg; September 27, 1985, Reg; February 17, 2010, Susp.	do	Do.
Springfield, City of, Washington County	210220	June 4, 1975, Emerg; July 17, 1986, Reg; February 17, 2010, Susp.	do	Do.
Stanton, City of, Powell County	210196	July 7, 1975, Emerg; January 16, 1987, Reg; February 17, 2010, Susp.	do	Do.
Mississippi:				
Oktibbeha County, Unincorporated Areas.	280277	April 23, 1979, Emerg; June 19, 1989, Reg; February 17, 2010, Susp.	do	Do.
Starkville, City of, Oktibbeha County	280124	December 10, 1974, Emerg; February 18, 1981, Reg; February 17, 2010, Susp.	do	Do.
Region V				
Michigan:				
Augusta, Village of, Kalamazoo County	260312	May 20, 1975, Emerg; March 15, 1982, Reg; February 17, 2010, Susp.	do	Do.
Comstock, Township of, Kalamazoo County.	260427	January 18, 1977, Emerg; November 17, 1982, Reg; February 17, 2010, Susp.	do	Do.
Cooper, Township of, Kalamazoo County.	260428	May 6, 1977, Emerg; September 28, 1979, Reg; February 17, 2010, Susp.	do	Do.
Kalamazoo, City of, Kalamazoo County	260315	December 26, 1974, Emerg; May 1, 1985, Reg; February 17, 2010, Susp.	do	Do.
Oshtemo, Charter Township of, Kalamazoo County.	260736	May 12, 1983, Emerg; May 25, 1984, Reg; February 17, 2010, Susp.	do	Do.
Portage, City of, Kalamazoo County	260577	May 20, 1976, Emerg; May 16, 1983, Reg; February 17, 2010, Susp.	do	Do.
Richland, Township of, Kalamazoo County.	260885	March 31, 1992, Emerg; May 19, 1992, Reg; February 17, 2010, Susp.	do	Do.
Ross, Township of, Kalamazoo County	260624	July 24, 1975, Emerg; March 15, 1982, Reg; February 17, 2010, Susp.	do	Do.
Vicksburg, Village of, Kalamazoo County.	260578	November 10, 1976, Emerg; July 2, 1987, Reg; February 17, 2010, Susp.	do	Do.
Ohio:				

State and location	Community No.	Effective date authorization/cancellation of sale of flood insurance in community	Current effective map date	Date certain federal assistance no longer available in SFHAs
Cincinnati, City of, Hamilton County	390210	June 27, 1973, Emerg; October 15, 1982, Reg; February 17, 2010, Susp.	.....do	Do.
Greenhills, Village of, Hamilton County	390219	May 6, 1975, Emerg; September 1, 1993, Reg; February 17, 2010, Susp.	.....do	Do.
Milford, City of, Hamilton, Clermont Counties.	390227	April 15, 1975, Emerg; January 16, 1981, Reg; February 17, 2010, Susp.	.....do	Do.
North Hampton, Village of, Clark County.	390679	July 3, 1978, Emerg; September 24, 1984, Reg; February 17, 2010, Susp.	.....do	Do.
Wisconsin:				
Biron, Village of, Wood County	555545	April 2, 1971, Emerg; May 25, 1973, Reg; February 17, 2010, Susp.	.....do	Do.
Marshfield, City of, Wood, Marathon Counties.	550515	February 18, 1975, Emerg; October 6, 2009, Reg; February 17, 2010, Susp.	.....do	Do.
Nekoosa, City of, Wood County	550516	May 16, 1975, Emerg; July 16, 1987, Reg; February 17, 2010, Susp.	.....do	Do.
Pittsville, City of, Wood County	550517	March 10, 1975, Emerg; November 6, 1991, Reg; February 17, 2010, Susp.	.....do	Do.
Port Edwards, Village of, Wood County	555572	July 2, 1971, Emerg; April 13, 1973, Reg; February 17, 2010, Susp.	.....do	Do.
Region VI				
New Mexico:				
Gallup, City of, McKinley County	350042	August 6, 1973, Emerg; March 1, 1978, Reg; February 17, 2010, Susp.	.....do	Do.
McKinley County, Unincorporated Areas	350039	May 9, 2007, Emerg; N/A, Reg; February 17, 2010, Susp.	.....do	Do.
Zuni, Pueblo of, McKinley, Cibola, Catron Counties.	350143	December 21, 1978, Emerg; September 4, 1987, Reg; February 17, 2010, Susp.	.....do	Do.
Texas:				
Copperas Cove, City of, Coryell, Bell, Lampasas Counties.	480155	July 3, 1975, Emerg; November 21, 1978, Reg; February 17, 2010, Susp.	.....do	Do.
Gatesville, City of, Coryell County	480156	December 18, 1974, Emerg; September 30, 1981, Reg; February 17, 2010, Susp.	.....do	Do.
McGregor, City of, Coryell County	480459	April 7, 1975, Emerg; February 1, 1979, Reg; February 17, 2010, Susp.	.....do	Do.
Oglesby, City of, Coryell County	480769	February 5, 2001, Emerg; November 1, 2007, Reg; February 17, 2010, Susp.	.....do	Do.
Region VIII				
Wyoming:				
Bear River, Town of, Uinta County	560103	N/A, Emerg; October 12, 2001, Reg; February 17, 2010, Susp.	.....do	Do.
Evanston, City of, Uinta County	560054	March 23, 1977, Emerg; January 15, 1988, Reg; February 17, 2010, Susp.	.....do	Do.
Mountain View, Town of, Uinta County	560092	August 25, 1977, Emerg; July 4, 1989, Reg; February 17, 2010, Susp.	.....do	Do.
Uinta County, Unincorporated Areas	560053	January 2, 1976, Emerg; December 15, 1978, Reg; February 17, 2010, Susp.	.....do	Do.
Region X				
Oregon:				
Douglas County, Unincorporated Areas	410059	December 3, 1971, Emerg; December 15, 1978, Reg; February 17, 2010, Susp.	.....do	Do.
Drain, City of, Douglas County	410061	August 1, 1975, Emerg; August 1, 1979, Reg; February 17, 2010, Susp.	.....do	Do.
Elkton, City of, Douglas County	410062	January 14, 1976, Emerg; September 5, 1979, Reg; February 17, 2010, Susp.	.....do	Do.
Glendale, City of, Douglas County	410063	February 18, 1975, Emerg; September 29, 1978, Reg; February 17, 2010, Susp.	.....do	Do.
Myrtle Creek, City of, Douglas County	410064	January 14, 1972, Emerg; February 15, 1978, Reg; February 17, 2010, Susp.	.....do	Do.
Oakland, City of, Douglas County	410271	November 1, 1976, Emerg; June 19, 1985, Reg; February 17, 2010, Susp.	.....do	Do.
Reedsport, City of, Douglas County	410065	May 13, 1975, Emerg; April 3, 1984, Reg; February 17, 2010, Susp.	.....do	Do.
Riddle, City of, Douglas County	410066	July 22, 1975, Emerg; August 1, 1979, Reg; February 17, 2010, Susp.	.....do	Do.
Roseburg, City of, Douglas County	410067	December 23, 1971, Emerg; June 1, 1977, Reg; February 17, 2010, Susp.	.....do	Do.
Sutherlin, City of, Douglas County	410275	N/A, Emerg; May 21, 1997, Reg; February 17, 2010, Susp.	.....do	Do.

State and location	Community No.	Effective date authorization/cancellation of sale of flood insurance in community	Current effective map date	Date certain federal assistance no longer available in SFHAs
Yoncalla, City of, Douglas County	410069	July 21, 1975, Emerg; August 21, 1978, Reg; February 17, 2010, Susp.	.....do	Do.

*do = Ditto.
Code for reading third column: Emerg.—Emergency; Reg.—Regular; Susp.—Suspension.

Dated: January 27, 2010.

Sandra K. Knight,

Deputy Assistant Administrator for Mitigation, Department of Homeland Security, Federal Emergency Management Agency.

[FR Doc. 2010–2487 Filed 2–4–10; 8:45 am]

BILLING CODE 9110–12–P

DEPARTMENT OF HOMELAND SECURITY

Federal Emergency Management Agency

44 CFR Part 64

[Docket ID FEMA–2010–0003; Internal Agency Docket No. FEMA–8117]

Suspension of Community Eligibility for Failure To Maintain Adequate Floodplain Management Regulations

AGENCY: Federal Emergency Management Agency, DHS.

ACTION: Final rule.

SUMMARY: FEMA is suspending one community because of its failure to maintain floodplain management regulations meeting minimum requirements under the National Flood Insurance Program (NFIP). If documentation is received from the community before the effective suspension date, indicating they have brought their floodplain management regulations into compliance with the NFIP requirements, FEMA will withdraw the suspension by publication in the **Federal Register** on a subsequent date.

DATES: *Effective Dates:* The effective date of the community's scheduled suspension is the date listed in the fourth column of the following table.

FOR FURTHER INFORMATION CONTACT: David Stearrett, Mitigation Directorate, 1800 South Bell Street, Arlington, VA 20598–3072, (202) 646–2953.

SUPPLEMENTARY INFORMATION: The National Flood Insurance Program (NFIP) enables property owners to purchase flood insurance that is generally not otherwise available. In return, communities agree to adopt and implement local floodplain management regulations that contribute to protecting lives and reducing the risk of property damage from future flooding. Section 1315 of the National Flood Insurance Act of 1968, as amended (42 U.S.C. 4022), prohibits flood insurance coverage authorized under the National Flood Insurance Program (42 U.S.C. 4001–4128) unless an appropriate public body adopts adequate floodplain management measures with effective administration and enforcement processes.

The community listed in this notice no longer complies with the NFIP requirements set forth at 44 CFR part 59 *et seq.* Under 44 CFR 59.24(d), a community will be suspended from the NFIP for failing to maintain adequate floodplain management regulations. Accordingly, FEMA is suspending the City of Brentwood, Tennessee, ("the City") on the effective date in the fourth column of the table. As of that date, the purchase of new flood insurance policies or the renewal of existing flood insurance policies under the NFIP will no longer be available.

FEMA will not suspend the City; however, if the community submits the documentation required under 44 CFR 59.24(d) to show that they have corrected the deficiencies in their flood damage prevention ordinance identified in previous letters to the community to the maximum extent possible. This documentation must be received by FEMA before the actual suspension date. If the City successfully demonstrates its compliance with NFIP regulations, FEMA will continue its eligibility for the sale of NFIP insurance. FEMA will then publish in the **Federal Register** a notice withdrawing the suspension of the community. In the interim, if you wish to determine whether FEMA has suspended the City on the suspension date, please contact the FEMA Region IV office at (770) 220–5414. Additional information may also be found at *http://www.fema.gov/plan/prevent/floodplain/nfipkeywords/suspension.shtm.*

FEMA identified the special flood hazard areas (SFHAs) in this community by publishing a Flood Insurance Rate Map. The effective date of this map is indicated in the last column of the table. By law, no Federally regulated entity may provide financial assistance for acquisition or construction purposes for property located in a SFHA unless the community in which the property is located is participating in the NFIP (42 U.S.C. 4106(a)). The prohibition against certain types of Federal disaster assistance also becomes effective for the City of Brentwood, Tennessee, on the date shown in the fourth column (42 U.S.C. 4106(b)).

The Administrator finds that notice and public comment procedure under 5 U.S.C. 553(b) are impracticable and unnecessary because the communities listed in this final rule have been adequately notified. FEMA addressed these notifications to the Chief Executive Officer of the City of Brentwood indicating that we will suspend the City unless they take the required corrective actions and remedial measures before the effective suspension date. Because we have made these notifications, this final rule may take effect within less than 30 days.

National Environmental Policy Act. This rule is categorically excluded from the requirements of 44 CFR part 10, Environmental Considerations. No environmental impact assessment has been prepared.

Regulatory Flexibility Act. The Administrator has determined that this rule is exempt from the requirements of the Regulatory Flexibility Act because the National Flood Insurance Act of 1968, as amended, 42 U.S.C. 4022, prohibits flood insurance coverage unless an appropriate public body adopts adequate floodplain management measures with effective enforcement measures. The communities listed no longer comply with the statutory requirements, and after the effective date, flood insurance will no longer be available in the community unless remedial action takes place.

Regulatory Classification. This final rule is not a significant regulatory action under the criteria of section 3(f) of Executive Order 12866 of September 30, 1993, Regulatory Planning and Review, 58 FR 51735.

Executive Order 13132, Federalism. This rule involves no policies that have

federalism implications under Executive Order 13132.

Executive Order 12988, Civil Justice Reform. This rule meets the applicable standards of Executive Order 12988.

Paperwork Reduction Act. This rule does not involve any collection of information for purposes of the Paperwork Reduction Act, 44 U.S.C. 3501 *et seq.*

List of Subjects in 44 CFR Part 64

Flood insurance, Floodplains.

■ Accordingly, 44 CFR Part 64 is amended as follows:

PART 64—[AMENDED]

■ 1. The authority citation for Part 64 continues to read as follows:

Authority: 42 U.S.C. 4001 *et seq.,* Reorganization Plan No. 3 of 1978, 3 CFR, 1978 Comp., p. 329; E.O. 12127, 44 FR 19367, 3 CFR, 1979 Comp., p. 376.

§ 64.6 [Amended]

The tables published under the authority of § 64.6 are amended as follows:

State	Location	Community No.	Date certain Federal assistance no longer available in special flood hazard area and the sale of flood insurance no longer available in the community	Current effective map date
Region IV				
Tennessee	Brentwood, City of	470205	February 17, 2010	September 29, 2006.

(Catalog of Federal Domestic Assistance No. 83.100, "Flood Insurance.")

Dated: January 21, 2010.

Sandra K. Knight,

Deputy Assistant Administrator for Mitigation, Mitigation Directorate, Federal Emergency Management Agency, Department of Homeland Security.

[FR Doc. 2010–2479 Filed 2–4–10; 8:45 am]

BILLING CODE 9110–12–P

DEPARTMENT OF HOMELAND SECURITY

Federal Emergency Management Agency

44 CFR Part 67

[Docket ID FEMA–2010–0003]

Final Flood Elevation Determinations

AGENCY: Federal Emergency Management Agency, DHS.

ACTION: Final rule.

SUMMARY: Base (1% annual-chance) Flood Elevations (BFEs) and modified BFEs are made final for the communities listed below. The BFEs and modified BFEs are the basis for the floodplain management measures that each community is required either to adopt or to show evidence of being already in effect in order to qualify or remain qualified for participation in the National Flood Insurance Program (NFIP).

DATES: The date of issuance of the Flood Insurance Rate Map (FIRM) showing BFEs and modified BFEs for each community. This date may be obtained by contacting the office where the maps are available for inspection as indicated in the table below.

ADDRESSES: The final BFEs for each community are available for inspection at the office of the Chief Executive Officer of each community. The respective addresses are listed in the table below.

FOR FURTHER INFORMATION CONTACT: Kevin C. Long, Acting Chief, Engineering Management Branch, Mitigation Directorate, Federal Emergency Management Agency, 500 C Street, SW., Washington, DC 20472, (202) 646–2820, or (e-mail) *kevin.long@dhs.gov.*

SUPPLEMENTARY INFORMATION: The Federal Emergency Management Agency (FEMA) makes the final determinations listed below for the modified BFEs for each community listed. These modified elevations have been published in newspapers of local circulation and ninety (90) days have elapsed since that publication. The Assistant Administrator for Mitigation has resolved any appeals resulting from this notification.

This final rule is issued in accordance with section 110 of the Flood Disaster Protection Act of 1973, 42 U.S.C. 4104, and 44 CFR part 67. FEMA has developed criteria for floodplain management in floodprone areas in accordance with 44 CFR part 60.

Interested lessees and owners of real property are encouraged to review the proof Flood Insurance Study and FIRM available at the address cited below for each community. The BFEs and modified BFEs are made final in the communities listed below. Elevations at selected locations in each community are shown.

National Environmental Policy Act. This final rule is categorically excluded from the requirements of 44 CFR part 10, Environmental Consideration. An environmental impact assessment has not been prepared.

Regulatory Flexibility Act. As flood elevation determinations are not within the scope of the Regulatory Flexibility Act, 5 U.S.C. 601–612, a regulatory flexibility analysis is not required.

Regulatory Classification. This final rule is not a significant regulatory action under the criteria of section 3(f) of Executive Order 12866 of September 30, 1993, Regulatory Planning and Review, 58 FR 51735.

Executive Order 13132, Federalism. This final rule involves no policies that have federalism implications under Executive Order 13132.

Executive Order 12988, Civil Justice Reform. This final rule meets the applicable standards of Executive Order 12988.

List of Subjects in 44 CFR Part 67

Administrative practice and procedure, Flood insurance, Reporting and recordkeeping requirements.

■ Accordingly, 44 CFR part 67 is amended as follows:

PART 67—[AMENDED]

■ 1. The authority citation for part 67 continues to read as follows:

Authority: 42 U.S.C. 4001 *et seq.;* Reorganization Plan No. 3 of 1978, 3 CFR, 1978 Comp., p. 329; E.O. 12127, 44 FR 19367, 3 CFR, 1979 Comp., p. 376.

§ 67.11 [Amended]

■ 2. The tables published under the authority of § 67.11 are amended as follows:

Flooding source(s)	Location of referenced elevation	* Elevation in feet (NGVD) + Elevation in feet (NAVD) # Depth in feet above ground ∧ Elevation in meters (MSL) Modified	Communities affected
Colbert County, Alabama, and Incorporated Areas Docket No.: FEMA–B–1010			
Pond Creek	At Wilson Dam Highway	+514	City of Muscle Shoals, Unincorporated Areas of Colbert County.
	0.5 mile downstream of Pepi Drive	+515	
Sink Hole 10	South of 6th Street, between Elledge Lane and Industrial Drive.	+493	City of Muscle Shoals.
Sink Hole 10A	At Oak Villa Drive, approximately 550 feet west of Elledge Lane.	+494	City of Muscle Shoals.
Sink Hole 10B	Bordered by Oak Villa Lane to the south, Oak Villa Drive to the east, and Cypress Street to the north.	+494	City of Muscle Shoals.
Sink Hole 11	North of 6th Street, between Laurel Oak Drive and Brooke Drive.	+498	City of Muscle Shoals.
Tennessee River	At the U.S. 72 crossing	+431	Unincorporated Areas of Colbert County.
	At the border between Lauderdale, Colbert, and Lawrence Counties.	+509	

* National Geodetic Vertical Datum.
+ North American Vertical Datum.
# Depth in feet above ground.
∧ Mean Sea Level, rounded to the nearest 0.1 meter.

ADDRESSES

City of Muscle Shoals

Maps are available for inspection at 2010 East Avalon Avenue, Muscle Shoals, AL 35662.

Unincorporated Areas of Colbert County

Maps are available for inspection at 201 North Main Street, Tuscumbia, AL 35674.

Powell County, Kentucky, and Incorporated Areas Docket No.: FEMA–B–1025			
Red River (at City of Stanton)	Approximately 800 feet downstream of Judy Creek	+641	Unincorporated Areas of Powell County.
	Approximately 5,400 feet upstream of Hatcher Creek	+651	
Red River (at Clay City)	Approximately 3,900 feet downstream of Bert T. Combs Mountain Parkway.	+623	Unincorporated Areas of Powell County.
	Approximately 5,800 feet downstream of Hatton Creek	+632	

* National Geodetic Vertical Datum.
+ North American Vertical Datum.
# Depth in feet above ground.
∧ Mean Sea Level, rounded to the nearest 0.1 meter.

ADDRESSES

Unincorporated Areas of Powell County

Maps are available for inspection at 525 Washington Street, Stanton, KY 40380.

Kalamazoo County, Michigan (All Jurisdictions) Docket No.: FEMA–B–7749			
Flowerfield Creek	Approximately 0.6 mile downstream of West YZ Avenue	+843	Township of Prairie Ronde.
	Approximately 25 feet upstream of 22nd Street	+890	
Flowerfield Creek East Tributary.	Confluence with Flowerfield Creek	+858	Township of Prairie Ronde.
	Approximately 100 feet upstream of West W Avenue	+878	
Flowerfield Creek West Tributary.	Confluence with Flowerfield Creek	+873	Township of Prairie Ronde.
	Approximately 100 feet upstream of West W Avenue	+886	
Gourdneck Lake	Entire shoreline	+853	Township of Schoolcraft.
Grass Lake	Entire shoreline	+879	Township of Richland.
Gull Lake	Entire shoreline	+882	Township of Richland, Township of Ross.
Kalamazoo River	Approximately 75 feet from the upstream side of South 35th Street.	+779	City of Galesburg.
	Approximately 150 feet upstream of Climax Drive	+786	

Flooding source(s)	Location of referenced elevation	* Elevation in feet (NGVD) + Elevation in feet (NAVD) # Depth in feet above ground ∧ Elevation in meters (MSL) Modified	Communities affected
Kalamazoo River	Approximately 600 feet east of the intersection of West G Avenue and North Pitcher Street, at the City of Parchment/Charter Township of Cooper corporate limits.	+755	City of Parchment.
	Approximately 25 feet downstream of East Mosel Avenue	+759	
Little Sugarloaf Lake	Entire shoreline	+860	City of Portage, Township of Schoolcraft.
Spring Creek	Approximately 0.9 mile downstream of South 15th Street	+834	Township of Schoolcraft.
	Approximately 400 feet upstream of South 14th Street	+855	
Sugarloaf (Lower) Lake	Entire shoreline	+859	Township of Schoolcraft.
Sugarloaf (Upper) Lake	Entire shoreline	+861	Township of Schoolcraft.
Weeds Lake	Entire shoreline	+882	Charter Township of Texas.

* National Geodetic Vertical Datum.
+ North American Vertical Datum.
# Depth in feet above ground.
∧ Mean Sea Level, rounded to the nearest 0.1 meter.

ADDRESSES

Charter Township of Texas
Maps are available for inspection at 7110 West Q Avenue, Kalamazoo, MI 49009.

City of Galesburg
Maps are available for inspection at 200 East Michigan Avenue, Galesburg≤

City of Parchment
Maps are available for inspection at 650 South Riverview Drive, Parchment, MI 49004.

City of Portage
Maps are available for inspection at 7900 South Westnedge Avenue, Portage, MI 49002.

Township of Prairie Ronde
Maps are available for inspection at 8140 West W Avenue, Schoolcraft, MI 49087.

Township of Richland
Maps are available for inspection at 7401 North 32nd Street, Richland, MI 49083.

Township of Ross
Maps are available for inspection at 12086 East M–89, Richland, MI 49083.

Township of Schoolcraft
Maps are available for inspection at 50 East VW Avenue, Vicksburg, MI 49097.

McKinley County, New Mexico, and Incorporated Areas
Docket No.: FEMA–B–1017

Little Puerco Wash	Approximately 211 feet upstream of the intersection of Mesa Avenue and Little Puerco Wash.	+6543	City of Gallup, Unincorporated Areas of McKinley County.
	Approximately 3,696 feet upstream of the intersection of Mesa Avenue and Little Puerco Wash.	+6606	
Puerco River	Approximately 2,904 feet upstream of the intersection of Interstate 40 and State Highway 66.	+6469	City of Gallup, Unincorporated Areas of McKinley County.
	Approximately 1,320 feet upstream of the intersection of Ford Drive and the Puerco River.	+6523	
Zuni River	Approximately 5,700 feet upstream from Indian Service Route 40.	+6259	Pueblo of Zuni.
	Approximately 5,016 feet downstream of the Black Rock Lake Reservoir Dam.	+6327	

* National Geodetic Vertical Datum.
+ North American Vertical Datum.
# Depth in feet above ground.
∧ Mean Sea Level, rounded to the nearest 0.1 meter.

ADDRESSES

City of Gallup
Maps are available for inspection at 110 West Aztec Avenue, Gallup, NM 87301.

Unincorporated Areas of McKinley County
Maps are available for inspection at the Office of the County Manager, 207 West Hill Avenue, Gallup, NM 87301.

Pueblo of Zuni
Maps are available for inspection at the Tribal Court, 1203B State Highway 53, Zuni, NM 87327.

Flooding source(s)	Location of referenced elevation	* Elevation in feet (NGVD) + Elevation in feet (NAVD) # Depth in feet above ground ∧ Elevation in meters (MSL) Modified	Communities affected
Clark County, Ohio, and Incorporated Areas Docket No.: FEMA–B–1018			
Chapman Creek	3,300 feet upstream from the confluence with the Mad River.	+950	Unincorporated Areas of Clark County.
	5,200 feet upstream from the confluence with the Mad River.	+959	

* National Geodetic Vertical Datum.
+ North American Vertical Datum.
# Depth in feet above ground.
∧ Mean Sea Level, rounded to the nearest 0.1 meter.

ADDRESSES

Unincorporated Areas of Clark County

Maps are available for inspection at the Government Center, 3130 East Main Street, Springfield, OH 45505.

Hamilton County, Ohio, and Incorporated Areas Docket No.: FEMA–B–1012			
Little Miami River	65 feet upstream of the Norfolk and Western railroad crossing.	+501	Unincorporated Areas of Hamilton County, Village of Fairfax, Village of Mariemont.
	665 feet downstream of Harvard Street in the Village of Mariemont.	+501	

* National Geodetic Vertical Datum.
+ North American Vertical Datum.
# Depth in feet above ground.
∧ Mean Sea Level, rounded to the nearest 0.1 meter.

ADDRESSES

Unincorporated Areas of Hamilton County

Maps are available for inspection at the County Department of Public Works, 138 East Court Street, Room 800, Cincinnati, OH 45202.

Village of Fairfax

Maps are available for inspection at the Municipal Building, 5902 Hawhorn Avenue, Fairfax, OH 45227.

Village of Mariemont

Maps are available for inspection at the Municipal Building, 6907 Wooster Pike, Mariemont, OH 45227.

(Catalog of Federal Domestic Assistance No. 97.022, "Flood Insurance.")

Sandra K. Knight,

Deputy Assistant Administrator for Mitigation, Department of Homeland Security, Federal Emergency Management Agency.

[FR Doc. 2010–2477 Filed 2–4–10; 8:45 am]

BILLING CODE 9110–12–P

Proposed Rules

Federal Register
Vol. 75, No. 24
Friday, February 5, 2010

This section of the FEDERAL REGISTER contains notices to the public of the proposed issuance of rules and regulations. The purpose of these notices is to give interested persons an opportunity to participate in the rule making prior to the adoption of the final rules.

DEPARTMENT OF AGRICULTURE

Agricultural Marketing Service

7 CFR Part 929

[Doc. No. AMS–FV–09–0073; FV10–929–1 PR]

Cranberries Grown in the States of Massachusetts, Rhode Island, Connecticut, New Jersey, Wisconsin, Michigan, Minnesota, Oregon, Washington, and Long Island in the State of New York; Changes to Reporting Dates

AGENCY: Agricultural Marketing Service, USDA.

ACTION: Proposed rule.

SUMMARY: This rule invites comments on proposed changes to the reporting dates prescribed under the marketing order that regulates the handling of cranberries grown in the States of Massachusetts, Rhode Island, Connecticut, New Jersey, Wisconsin, Michigan, Minnesota, Oregon, Washington, and Long Island in the State of New York. The order is administered locally by the Cranberry Marketing Committee (Committee). This rule would revise the due dates of handler reports to provide more time for handlers to file their reports with the Committee, and would improve handler compliance with the order's reporting regulations.

DATES: Comments must be received by March 8, 2010.

ADDRESSES: Interested persons are invited to submit written comments concerning this proposal. Comments must be sent to the Docket Clerk, Marketing Order Administration Branch, Fruit and Vegetable Programs, AMS, USDA, 1400 Independence Avenue, SW., STOP 0237, Washington, DC 20250–0237; Fax: (202) 720–8938; or Internet: *http://www.regulations.gov.* All comments should reference the document number and the date and page number of this issue of the **Federal Register** and will be made available for public inspection in the Office of the Docket Clerk during regular business hours, or can be viewed at: *http://www.regulations.gov.* All comments submitted in response to this rule will be included in the record and will be made available to the public. Please be advised that the identity of the individuals or entities submitting the comments will be made public on the Internet at the address provided above.

FOR FURTHER INFORMATION CONTACT: Patricia A. Petrella, Marketing Specialist or Kenneth G. Johnson, Regional Manager, DC Marketing Field Office, Marketing Order Administration Branch, Fruit and Vegetable Programs, AMS, USDA; Telephone: (301) 734–5243, Fax: (301) 734–5275, or E-mail: *Patricia.Petrella@ams.usda.gov* or *Kenneth.Johnson@ams.usda.gov.*

Small businesses may request information on complying with this regulation by contacting Antoinette Carter, Marketing Order Administration Branch, Fruit and Vegetable Programs, AMS, USDA, 1400 Independence Avenue, SW., STOP 0237, Washington, DC 20250–0237; Telephone: (202) 720–2491, Fax: (202) 720–8938, or E-mail: *Antoinette.Carter@ams.usda.gov.*

SUPPLEMENTARY INFORMATION: This proposal is issued under Marketing Agreement and Order No. 929, both as amended (7 CFR part 929), regulating the handling of cranberries produced in States of Massachusetts, Rhode Island, Connecticut, New Jersey, Wisconsin, Michigan, Minnesota, Oregon, Washington, and Long Island in the State of New York, hereinafter referred to as the "order." The order is effective under the Agricultural Marketing Agreement Act of 1937, as amended (7 U.S.C. 601–674), hereinafter referred to as the "Act."

The Department of Agriculture (USDA) is issuing this rule in conformance with Executive Order 12866.

This proposal has been reviewed under Executive Order 12988, Civil Justice Reform. This rule is not intended to have retroactive effect.

The Act provides that administrative proceedings must be exhausted before parties may file suit in court. Under section 608c(15)(A) of the Act, any handler subject to an order may file with USDA a petition stating that the order, any provision of the order, or any obligation imposed in connection with the order is not in accordance with law and request a modification of the order or to be exempted therefrom. A handler is afforded the opportunity for a hearing on the petition. After the hearing, USDA would rule on the petition. The Act provides that the district court of the United States in any district in which the handler is an inhabitant, or has his or her principal place of business, has jurisdiction to review USDA's ruling on the petition, provided an action is filed not later than 20 days after the date of the entry of the ruling.

This proposal invites comments on revising the due dates of handler reports from January 5, May 5, and August 5 of each fiscal period and September 5 of the succeeding fiscal period to January 20, May 20, and August 20 of each fiscal period and September 20 of the succeeding period, respectively. The proposed dates would provide more time for handlers to file their reports. It has become more difficult for handlers to meet the current filing deadlines due to the demands of growing domestic and international markets and the larger volumes of cranberries handled.

Currently, § 929.62(d) of the order provides that each handler shall, upon request of the Committee, file promptly with the Committee a certified report as to the quantity of cranberries handled during any designated period or periods. Further, § 929.105 provides that certified reports shall be filed with the Committee, on a form provided by the Committee, by each handler not later than January 5, May 5, and August 5 of each fiscal period and by September 5 of the succeeding fiscal period. These reports must show the total quantity of cranberries acquired and the total quantity of cranberries and *Vaccinium oxycoccus* cranberries the handler handled from the beginning of the reporting period indicated through December 31, April 30, July 31, and August 31, respectively. The reports must also show the total quantity of cranberries and *Vaccinium oxycoccus* cranberries as well as cranberry products and *Vaccinium oxycoccus* cranberry products held by the handler on January 1, May 1, August 1, and August 31 of each fiscal period. Information to be submitted to the Committee on the handler reports would not be changed by this action.

The Committee recommended that the order's reporting regulations be changed

to allow handlers additional time to submit these reports. Over time, the amount of cranberries being grown and handled has increased, and the greater demands associated with expanding markets have made it increasingly difficult for handlers to gather the information required for the reports before the filing deadline.

Initial Regulatory Flexibility Analysis

Pursuant to requirements set forth in the Regulatory Flexibility Act (RFA) (5 U.S.C. 601–612), the Agricultural Marketing Service (AMS) has considered the economic impact of this action on small entities. Accordingly, AMS has prepared this initial regulatory flexibility analysis.

The purpose of the RFA is to fit regulatory actions to the scale of business subject to such actions in order that small businesses will not be unduly or disproportionately burdened. Marketing orders issued pursuant to the Act, and rules issued thereunder, are unique in that they are brought about through group action of essentially small entities acting on their own behalf.

There are approximately 80 handlers of cranberries who are subject to regulation under the marketing order and approximately 1,200 cranberry growers in the regulated area. Small agricultural service firms are defined by the Small Business Administration (SBA) (13 CFR 121.201) as those having annual receipts of less than $7,000,000, and small agricultural producers are defined as those having annual receipts of less than $750,000. Based on information maintained by the Committee, the majority of growers and handlers of cranberries under the order would be considered small entities under SBA's standards.

Under the order, handlers are required to submit acquisition, handling, and inventory reports to the Committee four times per year. Such information is used by the Committee in the administration of the order. The currently prescribed due dates follow the end of each respective reporting period by five days. Handlers indicated that it has become difficult to comply with the current reporting deadlines because five days is not enough time to compile the information required for the reports.

This proposal invites comments on revising the due dates of mandatory handler reports from January 5, May 5, and August 5 of each fiscal period; and September 5 of the succeeding fiscal period to January 20, May 20, and August 20 of each fiscal period; and September 20 of the succeeding period, respectively. The proposed dates would provide more time for handlers to file their reports.

At its August 21, 2009, meeting, the Committee discussed whether the current due dates needed to be changed to allow more time for handlers to comply with the reporting requirements. The Committee staff indicated that compliance with the order's reporting requirements would improve if handlers were given additional time to file the reports.

The Committee discussed alternatives to this change, including not making the change at all. However, the Committee believes that this change is necessary to ensure that handlers have adequate time to comply with the order's requirements.

This rule is not expected to have any economic impact on growers or handlers of any size. The benefits of this rule are not expected to be disproportionately greater or less for small handlers or growers than for larger entities.

This proposed rule would not impose any additional reporting or recordkeeping requirements on either small or large cranberry handlers. As with all Federal marketing order programs, reports and forms are periodically reviewed to reduce information requirements and duplication by industry and public sector agencies.

AMS is committed to complying with the E-Government Act, to promote the use of the Internet and other information technologies to provide increased opportunities for citizen access to Government information and services, and for other purposes.

USDA has not identified any relevant Federal rules that duplicate, overlap or conflict with this proposed rule.

In addition, the Committee's meeting was widely publicized throughout the cranberry industry and all interested persons were invited to attend the meeting and participate in Committee deliberations on all issues. Like all Committee meetings, the August 21, 2009, meeting was a public meeting and all entities, both large and small, were able to express views on this issue. Finally, interested persons are invited to submit comments on this proposed rule, including the regulatory and informational impacts of this action on small businesses.

A small business guide on complying with fruit, vegetable, and specialty crop marketing agreements and orders may be viewed at: *http://www.ams.usda.gov.* Any questions about the compliance guide should be sent to Antoinette Carter at the previously mentioned address in the **FOR FURTHER INFORMATION CONTACT** section.

A 30-day comment period is provided to allow interested persons to respond to this proposal. Thirty days is deemed appropriate because this rule, if adopted, should be in place as soon as possible to inform handlers of the new reporting deadline in May of 2010. All written comments timely received will be considered before a final determination is made on this matter.

List of Subjects in 7 CFR Part 987

Marketing agreements, Reporting and recordkeeping requirements, Cranberries.

For the reasons set forth in the preamble, 7 CFR part 929 is proposed to be amended as follows:

PART 929—CRANBERRIES GROWN IN THE STATES OF MASSACHUSETTS, RHODE ISLAND, CONNECTICUT, NEW JERSEY, WISCONSIN, MICHIGAN, MINNESOTA, OREGON, WASHINGTON, AND LONG ISLAND IN THE STATE OF NEW YORK

1. The authority citation for 7 CFR part 929 continues to read as follows:

Authority: 7 U.S.C. 601–674.

2. In § 929.105, the introductory text of paragraph (b) is revised to read as follows:

§ 929.105 Reporting.

* * * * *

(b) Certified reports shall be filed with the committee, on a form provided by the committee, by each handler not later than January 20, May 20, and August 20 of each fiscal period and by September 20 of the succeeding fiscal period showing:

* * * * *

Dated: February 2, 2010.

Rayne Pegg,

Administrator, Agricultural Marketing Service.

[FR Doc. 2010–2546 Filed 2–4–10; 8:45 am]

BILLING CODE 3410–02–P

DEPARTMENT OF AGRICULTURE

Agricultural Marketing Service

7 CFR Part 929

[Doc. No. AMS–FV–09–0070; FV09–929–1 PR]

Cranberries Grown in the States of Massachusetts, Rhode Island, Connecticut, New Jersey, Wisconsin, Michigan, Minnesota, Oregon, Washington, and Long Island in the State of New York; Revised Nomination and Balloting Procedures

AGENCY: Agricultural Marketing Service, USDA.

ACTION: Proposed rule.

SUMMARY: This rule invites comments on revisions to the nomination and balloting procedures for independent growers on the Cranberry Marketing Committee (Committee). The order regulates the handling of cranberries produced in the States of Massachusetts, Rhode Island, Connecticut, New Jersey, Wisconsin, Michigan, Minnesota, Oregon, Washington, and Long Island in the State of New York, and is administered locally by the Committee. This rule would revise the nomination and balloting procedures for independent growers to allow them to participate in the election process for either a member or alternate member on the Committee. The current procedures do not provide for an election process for each position separately.

DATES: Comments must be received by March 8, 2010.

ADDRESSES: Interested persons are invited to submit written comments concerning this proposal. Comments must be sent to the Docket Clerk, Marketing Order Administration Branch, Fruit and Vegetable Programs, AMS, USDA, 1400 Independence Avenue, SW., STOP 0237, Washington, DC 20250–0237; *Fax:* (202) 720–8938; or *Internet: http://www.regulations.gov.* All comments should reference the document number and the date and page number of this issue of the **Federal Register** and will be made available for public inspection in the Office of the Docket Clerk during regular business hours, or can be viewed at: *http://www.regulations.gov.* All comments submitted in response to this rule will be included in the record and will be made available to the public. Please be advised that the identity of the individuals or entities submitting the comments will be made public on the Internet at the address provided above.

FOR FURTHER INFORMATION CONTACT: Patricia A. Petrella, Marketing Specialist or Kenneth G. Johnson, Regional Manager, DC Marketing Field Office, Marketing Order Administration Branch, Fruit and Vegetable Programs, AMS, USDA; *Telephone:* (301) 734–5243, *Fax:* (301) 734–5275, or *E-mail: Patricia.Petrella@ams.usda.gov* or *Kenneth.Johnson@ams.usda.gov.*

Small businesses may request information on complying with this regulation by contacting Antoinette Carter, Marketing Order Administration Branch, Fruit and Vegetable Programs, AMS, USDA, 1400 Independence Avenue, SW., STOP 0237, Washington, DC 20250–0237; *Telephone:* (202) 720–2491, *Fax:* (202) 720–8938, or *E-mail: Antoinette.Carter@ams.usda.gov.*

SUPPLEMENTARY INFORMATION: This proposal is issued under Marketing Agreement and Order No. 929, both as amended (7 CFR part 929), regulating the handling of cranberries produced in the States of Massachusetts, Rhode Island, Connecticut, New Jersey, Wisconsin, Michigan, Minnesota, Oregon, Washington, and Long Island in the State of New York, hereinafter referred to as the "order." The order is effective under the Agricultural Marketing Agreement Act of 1937, as amended (7 U.S.C. 601–674), hereinafter referred to as the "Act."

The Department of Agriculture (USDA) is issuing this rule in conformance with Executive Order 12866.

This proposal has been reviewed under Executive Order 12988, Civil Justice Reform. This rule is not intended to have retroactive effect.

The Act provides that administrative proceedings must be exhausted before parties may file suit in court. Under section 608c(15)(A) of the Act, any handler subject to an order may file with USDA a petition stating that the order, any provision of the order, or any obligation imposed in connection with the order is not in accordance with law and request a modification of the order or to be exempted therefrom. A handler is afforded the opportunity for a hearing on the petition. After the hearing, USDA would rule on the petition. The Act provides that the district court of the United States in any district in which the handler is an inhabitant, or has his or her principal place of business, has jurisdiction to review USDA's ruling on the petition, provided an action is filed not later than 20 days after the date of the entry of the ruling.

This proposal invites comments on revisions to the nomination and balloting procedures for independent growers on the Committee. This rule would revise the procedures for independent growers to allow them to participate in the election process for either a member or alternate member on the Committee. The current procedures do not provide for an election process for each position separately.

Section 929.22(e) of the order specifies the nomination procedures for nominees representing entities other than the major cooperative marketing organization (independent growers). That section specifies that the names of all eligible nominees from each district received by the Committee, by such date and in such form as recommended by the Committee and approved by the Secretary, will appear on the nomination ballot for that district. It also specifies that the nominee that receives the highest number of votes cast shall be the member and the nominee receiving the second highest number votes cast shall be the alternate. Section 929.22(i) provides that the Committee, with the approval of the Secretary, may issue rules and regulations to carry out the provisions or to change the procedures of this section.

The Committee recommended that rules and regulations be established to change the procedures for independent grower nominations. The Committee recommended these changes because candidates are less willing to participate in the nomination process when they are not able to specify whether they are seeking a member or alternate member position on the Committee. Candidates considering to be nominated to the Committee have indicated that they would be more willing to serve if they could initially be nominated as the alternate member. Becoming an alternate member first allows them to gain knowledge of the marketing order and Committee operations without having the responsibility of casting votes. After gaining this knowledge, alternate members can then be nominated to run as the member on the Committee if they so desire.

This action would require a slight change in the nomination and balloting process. It would provide candidates the opportunity to indicate what position (member or alternate) they are seeking. Following the deadline for filing nomination petitions the names of those candidates running for member and the names of those candidates running for alternate member would be placed on the ballot and sent, via U.S. Postal Service, to qualified growers in the marketing order districts.

The candidate receiving the highest number of votes in the member category and the candidate receiving the highest number of votes in the alternate member

category in each marketing order district would be declared nominees and their names forwarded to the Secretary for selection.

This change to the nomination procedures would only effect the independent grower nominations for the Committee. The major cooperative marketing organization nominees are selected by that organization and submitted to the Secretary for consideration.

Initial Regulatory Flexibility Analysis

Pursuant to requirements set forth in the Regulatory Flexibility Act (RFA) (5 U.S.C. 601–612), the Agricultural Marketing Service (AMS) has considered the economic impact of this action on small entities. Accordingly, AMS has prepared this initial regulatory flexibility analysis.

The purpose of the RFA is to fit regulatory actions to the scale of business subject to such actions in order that small businesses will not be unduly or disproportionately burdened. Marketing orders issued pursuant to the Act, and rules issued thereunder, are unique in that they are brought about through group action of essentially small entities acting on their own behalf.

There are approximately 80 handlers of cranberries who are subject to regulation under the marketing order and approximately 1,200 cranberry producers in the regulated area. Small agricultural service firms are defined by the Small Business Administration (SBA) (13 CFR 121.201) as those having annual receipts of less than $7,000,000, and small agricultural producers are defined as those having annual receipts of less than $750,000. Based on information maintained by the Committee, the majority of producers and handlers of cranberries under the order are considered small entities under SBA's standards.

This rule would revise the nomination procedures for independent growers to allow them to participate in the election process for either a member or alternate member on the Committee. The current nomination process does not permit an election process for each position. Authority for this action is provided in § 929.22(i).

At the meeting where this issue was considered, the Committee discussed that the nomination procedures needed to be changed to encourage more participation in the nomination process and to encourage more diverse candidates on the Committee. The independent grower members and alternate members on the Committee indicated that this change would improve the nomination process by generating participation and providing the opportunity for more diverse candidates to run for a position on the Committee.

There are no anticipated economic impacts on either small or large producers or handlers that would result from this rule, as it pertains only to Committee nomination and balloting procedures.

The benefits for this rule are not expected to be disproportionately greater or less for small handlers or producers than for larger entities.

The Committee discussed alternatives to this change, including not making the change at all. If this change is not made the Committee believes that the number of new candidates who want to be considered for nomination on the Committee will continue to decline.

This proposed rule would not impose any additional reporting or recordkeeping requirements on either small or large cranberry handlers. As with all Federal marketing order programs, reports and forms are periodically reviewed to reduce information requirements and duplication by industry and public sector agencies.

AMS is committed to complying with the E-Government Act, to promote the use of the Internet and other information technologies to provide increased opportunities for citizen access to Government information and services, and for other purposes.

USDA has not identified any relevant Federal rules that duplicate, overlap or conflict with this proposed rule.

In addition, the Committee's meeting was widely publicized throughout the cranberry industry and all interested persons were invited to attend the meeting and participate in Committee deliberations on all issues. Like all Committee meetings, the August 21, 2009, meeting was a public meeting and all entities, both large and small, were able to express views on this issue. Finally, interested persons are invited to submit comments on this proposed rule, including the regulatory and informational impacts of this action on small businesses.

A small business guide on complying with fruit, vegetable, and specialty crop marketing agreements and orders may be viewed at: *http://www.ams.usda.gov.* Any questions about the compliance guide should be sent to Antoinette Carter at the previously mentioned address in the **FOR FURTHER INFORMATION CONTACT** section.

A 30-day comment period is provided to allow interested persons to respond to this proposal. Thirty days is deemed appropriate because this rule would need to be in place prior to the next nomination process which begins in June 2010. The term of office begins on August 1 of each even numbered year. All written comments timely received will be considered before a final determination is made on this matter.

List of Subjects in 7 CFR Part 987

Marketing agreements, Reporting and recordkeeping requirements, Cranberries.

For the reasons set forth in the preamble, 7 CFR part 929 is proposed to be amended as follows:

PART 929—CRANBERRIES GROWN IN THE STATES OF MASSACHUSETTS, RHODE ISLAND, CONNECTICUT, NEW JERSEY, WISCONSIN, MICHIGAN, MINNESOTA, OREGON, WASHINGTON, AND LONG ISLAND IN THE STATE OF NEW YORK

1. The authority citation for 7 CFR part 929 continues to read as follows:

Authority: 7 U.S.C. 601–674.

2. A new section 929.161 is added to read as follows:

§ 929.161 Nomination and balloting procedures for candidates other than the major cooperative marketing organization.

(a) During the nomination process, each eligible candidate shall indicate if he/she is seeking a position on the Committee as a member or alternate member.

(b) Ballots provided by the Committee shall include the names of those candidates seeking member positions on the Committee and those seeking alternate member positions.

(c) All ballots shall be received by a date designated by the Committee office staff. Votes for member positions and alternate member positions shall be tabulated separately. In districts entitled to one member, the successful candidate shall be the person receiving the highest number of votes as a member or alternate member. In districts entitled to two members, the successful candidates shall be those receiving the highest and second highest number of votes as members or alternate members. Those names shall then be forwarded to the Secretary for selection.

Dated: February 2, 2010.

Rayne Pegg,

Administrator, Agricultural Marketing Service.

[FR Doc. 2010–2549 Filed 2–4–10; 8:45 am]

BILLING CODE 3410–02–P

DEPARTMENT OF AGRICULTURE

Rural Utilities Service

7 CFR Part 1720

RIN–0572–ZA06

Guarantees for Bonds and Notes Issued for Electrification or Telephone Purposes

AGENCY: Rural Utilities Service, USDA.

ACTION: Proposed rule.

SUMMARY: The Rural Utilities Service (RUS) proposes to amend its regulations for the guarantee program for cooperative and other not-for-profit lenders that make loans for eligible electric and telephone purposes. These proposed amendments implement changes adapted in the Food, Conservation, and Energy Act of 2008. The intended effect is to update agency regulations to reflect current statutory authority.

DATES: Written comments on this proposed action must be received by RUS no later than April 6, 2010.

ADDRESSES: Submit comments by either of the following methods:

- *Federal eRulemaking Portal:* Go to *http://www.regulations.gov*. In the "Search Documents" box, enter RUS–09–Electric–0005, check the box under the Search box labeled "Select to find documents accepting comments or submissions," and click on the GO>> key. To submit a comment, choose "Send a comment or submission," under the Docket Title. In order to submit your comment, the information requested on the "Public Comment and Submission Form," must be completed. (If you click on the hyperlink of the docket when the search returns it, you will see the docket details. Click on the yellow balloon to receive the "Public Comment and Submission Form.") Information on using Regulations.gov, including instructions for accessing documents, submitting comments, and viewing the docket after the close of the comment period, is available through the site's "How to Use this Site" link.
- *Postal Mail/Commercial Delivery:* Please send your comments addressed to Michele Brooks, Director, Program Development and Regulatory Analysis, USDA Rural Development, STOP 1522, Room 5162, 1400 Independence Avenue, SW., Washington, DC 20250–1522. Please state that your comment refers to Docket No. RUS–09–Electric–0005.

Other Information: Additional information about RUS and its programs is available at *http://www.rurdev.usda.gov/index.html*.

FOR FURTHER INFORMATION CONTACT: Karen L. Larsen, Policy Analysis and Loan Management Staff, Office of the Assistant Administrator, Electric Programs, Rural Utilities Service, United States Department of Agriculture, 1400 Independence Avenue, SW., Room 5165–S, Washington, DC 20250–1560. Telephone (202) 720–9545; e-mail: *karen.larsen@wdc.usda.gov*.

SUPPLEMENTARY INFORMATION:

Executive Order 12866

This proposed rule has been determined to be not significant for purposes of Executive Order 12866 and, therefore, has not been reviewed by the Office of Management and Budget.

Catalog of Federal Domestic Assistance

The Catalog of Federal Domestic Assistance (CFDA) number assigned to the Electric Loan and Loan Guarantee program is 10.850 Rural Electrification Loans and Loan Guarantees. The catalog is available on the Internet and the General Services Administration's (GSA) free CFDA Web site at *http://www.cfda.gov*. The CFDA Web site also contains a PDF file version of the Catalog that, when printed, has the same layout as the printed document that the Government Printing Office (GPO) provides. GPO prints and sells the CFDA to interested buyers. For information about purchasing the Catalog of Federal Domestic Assistance from GPO, call the Superintendent of Documents at 202–512–1800 or toll free at 866–512–1800, or access GPO's on-line bookstore at *http://bookstore.gpo.gov*.

Executive Order 12372

This proposed rule is excluded from the scope of Executive Order 12372, Intergovernmental Consultation, which may require consultation with State and local officials. See the final rule related notice entitled, "Department Programs and Activities Excluded from Executive Order 12372" (50 FR 47034) advising that RUS loans and loan guarantees were not covered by Executive Order 12372.

Information Collection and Recordkeeping Requirements

This rule contains no new reporting or recordkeeping burdens under the Office of Management and Budget (OMB) that would require approval under the Paperwork Reduction Act of 1995 (44 U.S.C. Chapter 35).

National Environmental Policy Act Certification

The Administrator of RUS has determined that this proposed rule will not significantly affect the quality of the human environment as defined by the National Environmental Policy Act of 1969 (42 U.S.C. 4321 *et seq.*). Therefore, this action does not require an environmental impact statement or assessment.

Regulatory Flexibility Act Certification

It has been determined that the Regulatory Flexibility Act is not applicable to this proposed rule since the Agency is not required by 5 U.S.C. 551 *et seq.* or any other provision of law to publish a notice of proposed rulemaking with respect to the subject matter of this rule.

Executive Order 12988

This proposed rule has been reviewed under Executive Order 12988, Civil Justice Reform. The Agency has determined that this proposed rule meets the applicable standards in section 3 of the Executive Order.

Unfunded Mandates

This rule contains no Federal mandates (under the regulatory provisions of Title II of the Unfunded Mandates Reform Act of 1995) for State, local, and tribal governments for the private sector. Thus, this rule is not subject to the requirements of section 202 and 205 of the Unfunded Mandates Reform Act of 1995.

Executive Order 13132, Federalism

The policies contained in this proposed rule do not have any substantial direct effect on States, on the relationship between the national government and the States, or on the distribution of power and responsibilities among the various levels of government. Nor does this rule impose substantial direct compliance costs on State and local governments. Therefore, consultation with the States is not required.

Executive Order 13211

This proposed rule does not have any adverse effects on energy supply, distribution, or use should the proposal be implemented. The Agency has determined that the preparation of Statement of Energy Effects under Executive Oder 13211 is not required.

E-Government Act Compliance

The Agency is committed to complying with the E-Government Act, to promote the use of the Internet and other information technologies to

provide increased opportunities for citizen access to Government information and services, and for other purposes.

Background

The Rural Electrification Act of 1936 (the "RE Act") (7 U.S.C. 901 *et seq.*) authorizes the Secretary to guarantee and make loans to persons, corporations, States, territories, municipalities, and cooperative, non-profit, or limited-dividend associations for the purpose of furnishing or improving electric and telephone service in rural areas. Responsibility for administering electrification and telecommunications loan and guarantee programs along with other functions the Secretary deemed appropriate have been assigned to RUS under the Department of Agriculture Reorganization Act of 1994 (7 U.S.C. 6941 *et seq.*). The Administrator of RUS has been delegated responsibility for administering the programs and activities of RUS, see 7 CFR 1700.25.

Section 6101 of the Farm Security and Rural Investment Act of 2002 (Pub. L. 107–171) (FSRIA) amended the RE Act to add section 313A entitled "Guarantees for Bonds and Notes Issued for Electrification or Telephone Purposes." This section created a new loan guarantee program. Final regulations implementing the program were published in the **Federal Register** on October 29, 2004, 69 FR 63045.

Section 6106(a)(1)(A) of the Food, Conservation, and Energy Act of 2008 (Pub. L. 110–246) amended section 313A of the RE Act extending the program authorization from September 30, 2007, to September 30, 2012, expanding eligible loan purposes, and setting an annual limit of $1,000,000,000 on the total amount of guarantees approved by the Secretary during a fiscal year, subject to the availability of funds. Prior to the 2008 amendment the total amount of a lender's bonds and notes that could be guaranteed under section 313A was limited to the total amount of loans made by the lender concurrently with a loan approved by the Secretary under the RE Act.

Section 6106(a)(1)(B) further amended section 313A of the RE Act by removing the provision prohibiting the recipient from using any amount obtained from the reduction in funding costs as a result of a guarantee under section 313A to reduce the interest rate charged on a new or concurrent loan. New loan guarantees will not be subject to this limitation.

The proposed amendments to part 1720 revise the current regulations to implement the changes made by the 2008 Farm Bill and to clarify existing provisions.

List of Subjects in 7 CFR Part 1720

Electric power, Electric utilities, Loan programs—energy, Reporting and recordkeeping requirements, Rural areas.

For reasons set out in the preamble, RUS proposes to amend chapter XVII of title 7 of the Code of Federal Regulations by amending part 1720 as follows:

PART 1720—GUARANTEES FOR BONDS AND NOTES ISSUED FOR ELECTRIFICATION OR TELEPHONE PURPOSES

1. The authority citation for part 1720 continues to read as follows:

Authority: 7 U.S.C. 901 *et seq.;* 7 U.S.C. 940c–1.

2. Revise § 1720.2 to read as follows:

§ 1720.2 Background.

The Rural Electrification Act of 1936 (the "RE Act") (7 U.S.C. 901 *et seq.*) authorizes the Secretary to guarantee and make loans to persons, corporations, States, territories, municipalities, and cooperative, non-profit, or limited-dividend associations for the purpose of furnishing or improving electric and telephone service in rural areas. Responsibility for administering electrification and telecommunications loan and guarantee programs along with other functions the Secretary deemed appropriate have been assigned to RUS under the Department of Agriculture Reorganization Act of 1994 (7 U.S.C. 6941 *et seq.*). The Administrator of RUS has been delegated responsibility for administering the programs and activities of RUS, see 7 CFR 1700.25. Section 6101 of the Farm Security and Rural Investment Act of 2002 (Pub. L. 107–171) (FSRIA) amended the RE Act to include a new program under section 313A entitled Guarantees for Bonds and Notes Issued for Electrification or Telephone Purposes. This measure directed the Secretary of Agriculture to promulgate regulations that carry out the Program. The Secretary published the regulations for the program in the **Federal Register** as a final rule on October 29, 2004, adding Part 1720 to Title 7 of the Code of Federal Regulations. Section 6106(a)(1)(A) of the Food, Conservation, and Energy Act of 2008 (Pub. L. 110–246) amended section 313A of the RE Act by replacing the level of "concurrent loans" as a factor limiting the amount of bonds and notes that could be guaranteed and inserted "for eligible electrification or telephone purposes" as the limitation on the amount of bonds and notes that can be guaranteed under section 313A up to an annual program limit of $1,000,000,000, subject to availability of funds. Section 6106(a)(1)(B) further amended section 313A of the RE Act by removing the prohibition against the recipient using an amount obtained from the reduction in funding costs as a result of a new guarantee under section 313A to reduce the interest rate charged on a new or concurrent loan.

3. Amend § 1720.3 by adding the definition of "Eligible Loan" to read as follows:

§ 1720.3 Definitions.

* * * * *

Eligible Loan means a loan that a guaranteed lender extends to a borrower for up to 100 percent of the cost of eligible electrification or telephone purposes consistent with the RE Act.

* * * * *

4. Amend § 1720.4 by revising paragraphs (a)(2), (3), (4), and (b)(2) to read as follows:

§ 1720.4 General standards.

(a) * * *

(2) At the time the guarantee is executed, the total principal amount of guaranteed bonds outstanding would not exceed the principal amount of outstanding eligible loans previously made by the guaranteed lender;

(3) The proceeds of the guaranteed bonds will not be used directly or indirectly to fund projects for the generation of electricity; and

(4) The guaranteed lender will not use any amounts obtained from the reduction in funding costs provided by a loan guarantee issued prior to June 18, 2008, to reduce the interest rates borrowers are paying on new or outstanding loans, other than new concurrent loans as provided in 7 CFR part 1710, of this chapter.

(b) * * *

(2) Maintain sufficient collateral equal to the principal amount outstanding, for guaranteed lenders having a credit rating below "A−" on its senior secured debt without regard to the guarantee, or in the case of a lender that does not have senior secured debt, a corporate (counterparty) credit rating below "A−" without regard to the guarantee. Collateral shall be in the form of specific and identifiable unpledged securities equal to the value of the guaranteed amount. In the case of a guaranteed lender's default, the U.S. government claim shall not be subordinated to the claims of other creditors, and the indenture must provide that in the event

of default, the government has first rights on the asset. Upon application and throughout the term of the guarantee, guaranteed lenders not subject to collateral pledging requirements shall identify, with the concurrence of the Secretary, specific assets to be held as collateral should the credit rating of its senior secured debt, or its corporate credit rating, as applicable, without regard to the guarantee fall below "A – ." The Secretary has discretion to require collateral at any time should circumstances warrant.

* * * * *

5. Amend § 1720.5 by revising paragraphs (a)(1) and (b)(1) to read as follows:

§ 1720.5 Eligibility criteria.

(a) * * *

(1) A bank or other lending institution organized as a private, not-for-profit cooperative association, or otherwise organized on a non-profit basis; and

* * * * *

(b) * * *

(1) The guaranteed lender must furnish the Secretary with a certified list of the principal balances of eligible loans then outstanding and certify that such aggregate balance is at least equal to the sum of the proposed principal amount of guaranteed bonds to be issued, and any previously issued guaranteed bonds outstanding; and

* * * * *

6. Amend § 1720.6 by revising paragraph (a)(7) to read as follows:

§ 1720.6 Application process.

(a) * * *

(7) Evidence of a credit rating, from a Rating Agency, on its senior secured debt or its corporate credit rating, as applicable, without regard to the government guarantee and satisfactory to the Secretary; and

* * * * *

7. Amend § 1720.7 by revising paragraphs (b)(3) and (4), adding new paragraphs (b)(5) and (6), and revising paragraph (d) to read as follows:

§ 1720.7 Application evaluation.

* * * * *

(b) * * *

(3) The applicant's demonstrated performance of financially sound business practices as evidenced by reports of regulators, auditors and credit rating agencies;

(4) The extent to which the applicant is subject to supervision, examination, and safety and soundness regulation by an independent federal agency;

(5) The extent of concentration of financial risk that RUS may have resulting from previous guarantees made under Section 313A of the RE Act; and

(6) The extent to which providing the guarantee to the applicant will help reduce the cost and/or increase the supply of credit to rural America, or generate other economic benefits, including the amount of fee income available to be deposited into the Rural Economic Development Subaccount, maintained under section 313(b)(2)(A) of the RE Act (7 U.S.C. 940c(b)(2)(A)), after payment of the subsidy amount.

* * * * *

(d) *Decisions by the Secretary.* The Secretary shall approve or deny applications in a timely manner as such applications are received; provided, however, that in order to facilitate competitive evaluation of applications, the Secretary may from time to time defer a decision until more than one application is pending. The Secretary may limit the number of guarantees made to a maximum of five per year, to ensure a sufficient examination is conducted of applicant requests. RUS shall notify the applicant in writing of the Secretary's approval or denial of an application. Approvals for guarantees shall be conditioned upon compliance with 7 CFR 1720.4 and 1720.6 of this part. The Secretary reserves the discretion to approve an application for an amount less than that requested.

8. Amend § 1720.8 by revising paragraphs (a)(3), (4), and (8) to read as follows:

§ 1720.8 Issuance of the guarantee.

(a) * * *

(3) Prior to the issuance of the guarantee, the applicant must certify to the Secretary that the proceeds from the guaranteed bonds will be applied to fund new eligible loans under the RE Act, to refinance concurrent loans, or to refinance existing debt instruments of the guaranteed lender used to fund eligible loans;

(4) The applicant provides a certified list of eligible loans and their outstanding balances as of the date the guarantee is to be issued;

* * * * *

(8) The applicant shall provide evidence of a credit rating on its senior secured debt or its corporate credit rating, as applicable, without regard to the guarantee and satisfactory to the Secretary; and

* * * * *

9. Amend § 1720.12 by revising paragraph (a)(5) to read as follows:

§ 1720.12 Reporting requirements.

(a) * * *

(5) Credit rating, by a Rating Agency, on its senior secured debt or its corporate credit rating, as applicable, without regard to the guarantee and satisfactory to the Secretary; and

* * * * *

10. Revise § 1720.13 to read as follows:

§ 1720.13 Limitations on guarantees.

In a given year the maximum amount of guaranteed bonds that the Secretary may approve will be subject to budget authority, together with receipts authority from projected fee collections from guaranteed lenders, the principal amount of outstanding eligible loans made by the guaranteed lender, and Congressionally-mandated ceilings on the total amount of credit. The Secretary may also impose other limitations as appropriate to administer this guarantee program.

Dated: January 8, 2010.

Jonathan Adelstein,

Administrator, Rural Utilities Service.

[FR Doc. 2010–2402 Filed 2–4–10; 8:45 am]

BILLING CODE 3410–15–P

DEPARTMENT OF TRANSPORTATION

Federal Aviation Administration

14 CFR Part 71

[Docket No. FAA–2009–1179; Airspace Docket No. 09–ASW–35]

Proposed Amendment of Class E Airspace; Magnolia, AR

AGENCY: Federal Aviation Administration (FAA), DOT.

ACTION: Notice of proposed rulemaking (NPRM).

SUMMARY: This action proposes to amend Class E airspace at Magnolia, AR. Decommissioning of the Magnolia non-directional beacon (NDB) at Magnolia Municipal Airport, Magnolia, AR, has made this action necessary for the safety and management of Instrument Flight Rules (IFR) operations at Magnolia Municipal Airport.

DATES: Comments must be received on or before March 22, 2010.

ADDRESSES: Send comments on this proposal to the U.S. Department of Transportation, Docket Operations, 1200 New Jersey Avenue, SE., West Building Ground Floor, Room W12–140, Washington, DC 20590–0001. You must identify the docket number FAA–2009–1179/Airspace Docket No. 09–ASW–35, at the beginning of your comments. You may also submit comments through the Internet at *http://www.regulations.gov.*

You may review the public docket containing the proposal, any comments received, and any final disposition in person in the Dockets Office between 9 a.m. and 5 p.m., Monday through Friday, except Federal holidays. The Docket Office (telephone 1–800–647–5527), is on the ground floor of the building at the above address.

FOR FURTHER INFORMATION CONTACT: Scott Enander, Central Service Center, Operations Support Group, Federal Aviation Administration, Southwest Region, 2601 Meacham Blvd., Fort Worth, TX 76137; telephone: (817) 321–7716.

SUPPLEMENTARY INFORMATION:

Comments Invited

Interested parties are invited to participate in this proposed rulemaking by submitting such written data, views, or arguments, as they may desire. Comments that provide the factual basis supporting the views and suggestions presented are particularly helpful in developing reasoned regulatory decisions on the proposal. Comments are specifically invited on the overall regulatory, aeronautical, economic, environmental, and energy-related aspects of the proposal. Communications should identify both docket numbers and be submitted in triplicate to the address listed above. Commenters wishing the FAA to acknowledge receipt of their comments on this notice must submit with those comments a self-addressed, stamped postcard on which the following statement is made: "Comments to Docket No. FAA–2009–1179/Airspace Docket No. 09–ASW–35." The postcard will be date/time stamped and returned to the commenter.

Availability of NPRMs

An electronic copy of this document may be downloaded through the Internet at *http://www.regulations.gov.* Recently published rulemaking documents can also be accessed through the FAA's Web page at *http://www.faa.gov/airports_airtraffic/air_traffic/publications/airspace_amendments/.*

Additionally, any person may obtain a copy of this notice by submitting a request to the Federal Aviation Administration (FAA), Office of Air Traffic Airspace Management, ATA–400, 800 Independence Avenue, SW., Washington, DC 20591, or by calling (202) 267–8783. Communications must identify both docket numbers for this notice. Persons interested in being placed on a mailing list for future NPRMs should contact the FAA's Office of Rulemaking (202) 267–9677, to request a copy of Advisory Circular No. 11–2A, Notice of Proposed Rulemaking Distribution System, which describes the application procedure.

The Proposal

This action proposes to amend Title 14, Code of Federal Regulations (14 CFR), Part 71 by amending Class E airspace extending upward from 700 feet above the surface for standard instrument approach procedures at Magnolia Municipal Airport, Magnolia, AR. Airspace reconfiguration is necessary due to the decommissioning of the Magnolia NDB and the cancellation of the NDB approach. Adjustment to the geographic coordinates would be made in accordance with the FAAs National Aeronautical Charting Office. Controlled airspace is needed for the safety and management of IFR operations at the airport.

Class E airspace areas are published in Paragraph 6005 of FAA Order 7400.9T, dated August 27, 2009, and effective September 15, 2009, which is incorporated by reference in 14 CFR 71.1. The Class E airspace designation listed in this document would be published subsequently in the Order.

The FAA has determined that this proposed regulation only involves an established body of technical regulations for which frequent and routine amendments are necessary to keep them operationally current. It, therefore, (1) Is not a "significant regulatory action" under Executive Order 12866; (2) is not a "significant rule" under DOT Regulatory Policies and Procedures (44 FR 11034; February 26, 1979); and (3) does not warrant preparation of a Regulatory Evaluation as the anticipated impact is so minimal. Since this is a routine matter that will only affect air traffic procedures and air navigation, it is certified that this rule, when promulgated, will not have a significant economic impact on a substantial number of small entities under the criteria of the Regulatory Flexibility Act.

The FAA's authority to issue rules regarding aviation safety is found in Title 49 of the U.S. Code. Subtitle 1, Section 106 describes the authority of the FAA Administrator. Subtitle VII, Aviation Programs, describes in more detail the scope of the agency's authority. This rulemaking is promulgated under the authority described in Subtitle VII, Part A, Subpart I, Section 40103. Under that section, the FAA is charged with prescribing regulations to assign the use of airspace necessary to ensure the safety of aircraft and the efficient use of airspace. This regulation is within the scope of that authority as it would amend controlled airspace at Magnolia Municipal Airport, Magnolia, AR.

List of Subjects in 14 CFR Part 71

Airspace, Incorporation by reference, Navigation (Air).

The Proposed Amendment

In consideration of the foregoing, the Federal Aviation Administration proposes to amend 14 CFR Part 71 as follows:

PART 71—DESIGNATION OF CLASS A, B, C, D, AND E AIRSPACE AREAS; AIR TRAFFIC SERVICE ROUTES; AND REPORTING POINTS

1. The authority citation for part 71 continues to read as follows:

Authority: 49 U.S.C. 106(g); 40103, 40113, 40120; E.O. 10854, 24 FR 9565, 3 CFR, 1959–1963 Comp., p. 389.

§ 71.1 [Amended]

2. The incorporation by reference in 14 CFR 71.1 of FAA Order 7400.9T, Airspace Designations and Reporting Points, signed August 27, 2009, and effective September 15, 2009, is amended as follows:

Paragraph 6005 Class E Airspace areas extending upward from 700 feet or more above the surface of the earth.

* * * * *

ASW AR E5 Magnolia, AR [Amended]

Magnolia Municipal Airport, AR
(Lat. 33°13′39″ N., long. 93°13′01″ W.)

That airspace extending upward from 700 feet above the surface within a 6.4-mile radius of Magnolia Municipal Airport.

* * * * *

Issued in Fort Worth, TX, on January 26, 2010.

Ronnie Uhlenhaker,

Acting Manager, Operations Support Group, ATO Central Service Center.

[FR Doc. 2010–2544 Filed 2–4–10; 8:45 am]

BILLING CODE 4901–13–P

DEPARTMENT OF TRANSPORTATION

Federal Aviation Administration

14 CFR Part 71

[Docket No. FAA–2009–0538; Airspace Docket No. 09–ASW–15]

Proposed Amendment of Class E Airspace; Claremore, OK

AGENCY: Federal Aviation Administration (FAA), DOT.

ACTION: Notice of proposed rulemaking (NPRM).

SUMMARY: This action proposes to amend Class E airspace at Claremore, OK. Additional controlled airspace is necessary to accommodate new Standard Instrument Approach Procedures (SIAPs) at Claremore Regional Airport, Claremore, OK. The FAA is taking this action to enhance the safety and management of Instrument Flight Rules (IFR) operations for SIAPs at the airport.

DATES: Comments must be received on or before March 22, 2010.

ADDRESSES: Send comments on this proposal to the U.S. Department of Transportation, Docket Operations, 1200 New Jersey Avenue, SE., West Building Ground Floor, Room W12–140, Washington, DC 20590–0001. You must identify the docket number FAA–2009–0538/Airspace Docket No. 09–ASW–15, at the beginning of your comments. You may also submit comments through the Internet at *http://www.regulations.gov.* You may review the public docket containing the proposal, any comments received, and any final disposition in person in the Dockets Office between 9 a.m. and 5 p.m., Monday through Friday, except Federal holidays. The Docket Office (telephone 1–800–647–5527), is on the ground floor of the building at the above address.

FOR FURTHER INFORMATION CONTACT: Scott Enander, Central Service Center, Operations Support Group, Federal Aviation Administration, Southwest Region, 2601 Meacham Blvd., Fort Worth, TX 76137; telephone: (817) 321–7716.

SUPPLEMENTARY INFORMATION:

Comments Invited

Interested parties are invited to participate in this proposed rulemaking by submitting such written data, views, or arguments, as they may desire. Comments that provide the factual basis supporting the views and suggestions presented are particularly helpful in developing reasoned regulatory decisions on the proposal. Comments are specifically invited on the overall regulatory, aeronautical, economic, environmental, and energy-related aspects of the proposal. Communications should identify both docket numbers and be submitted in triplicate to the address listed above. Commenters wishing the FAA to acknowledge receipt of their comments on this notice must submit with those comments a self-addressed, stamped postcard on which the following statement is made: "Comments to Docket No. FAA–2009–0538/Airspace Docket No. 09–ASW–15." The postcard will be date/time stamped and returned to the commenter.

Availability of NPRMs

An electronic copy of this document may be downloaded through the Internet at *http://www.regulations.gov.* Recently published rulemaking documents can also be accessed through the FAA's Web page at *http://www.faa.gov/airports_airtraffic/air_traffic/publications/airspace_amendments/.*

Additionally, any person may obtain a copy of this notice by submitting a request to the Federal Aviation Administration (FAA), Office of Air Traffic Airspace Management, ATA–400, 800 Independence Avenue, SW., Washington, DC 20591, or by calling (202) 267–8783. Communications must identify both docket numbers for this notice. Persons interested in being placed on a mailing list for future NPRMs should contact the FAA's Office of Rulemaking (202) 267–9677, to request a copy of Advisory Circular No. 11–2A, Notice of Proposed Rulemaking Distribution System, which describes the application procedure.

The Proposal

This action proposes to amend Title 14, Code of Federal Regulations (14 CFR), Part 71 by adding additional Class E airspace extending upward from 700 feet above the surface for SIAPs operations at Claremore Regional Airport, Claremore, OK. Controlled airspace is needed for the safety and management of IFR operations at the airport.

Class E airspace areas are published in Paragraph 6005 of FAA Order 7400.9T, dated August 27, 2009, and effective September 15, 2009, which is incorporated by reference in 14 CFR 71.1. The Class E airspace designation listed in this document would be published subsequently in the Order.

The FAA has determined that this proposed regulation only involves an established body of technical regulations for which frequent and routine amendments are necessary to keep them operationally current. It, therefore, (1) is not a "significant regulatory action" under Executive Order 12866; (2) is not a "significant rule" under DOT Regulatory Policies and Procedures (44 FR 11034; February 26, 1979); and (3) does not warrant preparation of a Regulatory Evaluation as the anticipated impact is so minimal. Since this is a routine matter that will only affect air traffic procedures and air navigation, it is certified that this rule, when promulgated, will not have a significant economic impact on a substantial number of small entities under the criteria of the Regulatory Flexibility Act.

The FAA's authority to issue rules regarding aviation safety is found in Title 49 of the U.S. Code. Subtitle 1, Section 106 describes the authority of the FAA Administrator. Subtitle VII, Aviation Programs, describes in more detail the scope of the agency's authority. This rulemaking is promulgated under the authority described in Subtitle VII, Part A, Subpart I, Section 40103. Under that section, the FAA is charged with prescribing regulations to assign the use of airspace necessary to ensure the safety of aircraft and the efficient use of airspace. This regulation is within the scope of that authority as it would add additional controlled airspace at Claremore Regional Airport, Claremore, OK.

List of Subjects in 14 CFR Part 71

Airspace, Incorporation by reference, Navigation (air).

The Proposed Amendment

In consideration of the foregoing, the Federal Aviation Administration proposes to amend 14 CFR Part 71 as follows:

PART 71—DESIGNATION OF CLASS A, B, C, D, AND E AIRSPACE AREAS; AIR TRAFFIC SERVICE ROUTES; AND REPORTING POINTS

1. The authority citation for part 71 continues to read as follows:

Authority: 49 U.S.C. 106(g); 40103, 40113, 40120; E.O. 10854, 24 FR 9565, 3 CFR, 1959–1963 Comp., p. 389.

§ 71.1 [Amended]

2. The incorporation by reference in 14 CFR 71.1 of FAA Order 7400.9T, Airspace Designations and Reporting Points, signed August 27, 2009, and effective September 15, 2009, is amended as follows:

Paragraph 6005 Class E Airspace areas extending upward from 700 feet or more above the surface of the earth.

* * * * *

ASW OK E5 Claremore, OK [Amended]

Claremore Regional Airport, OK
(Lat. 36°17′34″ N., long. 95°28′27″ W.)
Claremore Regional Hospital Heliport, OK
Point In Space Coordinates
(Lat. 36°18′23″ N., long. 95°38′26″ W.)

That airspace extending upward from 700 feet above the surface within a 6.4-mile radius of Claremore Regional Airport and that airspace within a 6-mile radius of the

Point In Space serving Claremore Regional Hospital Heliport.

* * * * *

Issued in Fort Worth, TX, on January 26, 2010.

Ronnie Uhlenhaker,

Acting Manager, Operations Support Group, ATO Central Service Center.

[FR Doc. 2010–2531 Filed 2–4–10; 8:45 am]

BILLING CODE 4910–13–P

DEPARTMENT OF HOMELAND SECURITY

Coast Guard

33 CFR Part 165

[Docket No. USCG–2010–0002]

RIN 1625–AA00

Safety Zone; Dive Platform, Pago Pago Harbor, American Samoa

AGENCY: Coast Guard, DHS.

ACTION: Notice of proposed rulemaking.

SUMMARY: The Coast Guard proposes a temporary safety zone around a dive platform vessel in Pago Pago Harbor, American Samoa, while diving operations are under way in and around the CHEHALIS wreck. The safety zone is necessary to protect other vessels and the general public from hazards associated with dive operations. Entry into or remaining in the safety zone during the effective period would be prohibited unless authorized by the Coast Guard Captain of the Port Honolulu.

DATES: Comments and related material must be received by the Coast Guard on or before March 8, 2010.

ADDRESSES: You may submit comments identified by docket number USCG–2010–0002 using any one of the following methods:

(1) *Federal eRulemaking Portal: http://www.regulations.gov.*

(2) *Fax:* 202–493–2251.

(3) *Mail:* Docket Management Facility (M–30), U.S. Department of Transportation, West Building Ground Floor, Room W12–140, 1200 New Jersey Avenue, SE., Washington, DC 20590–0001.

(4) *Hand Delivery:* Same as mail address above between 9 a.m. and 5 p.m., Monday through Friday, except Federal holidays. The telephone number is 202–366–9329.

To avoid duplication, please use only one of these four methods. See the "Public Participation and Request for Comments" portion of the **SUPPLEMENTARY INFORMATION** section below for instructions on submitting comments.

FOR FURTHER INFORMATION CONTACT: If you have questions on this proposed rule, call or e-mail Lieutenant Commander Marcella Granquist, Waterways Management Division, U.S. Coast Guard Sector Honolulu, telephone 808–522–8266, extention 352, e-mail *Marcella.A.Granquist@uscg.mil.* If you have questions on viewing or submitting material to the docket, call Renee V. Wright, Program Manager, Docket Operations, telephone 202–366–9826.

SUPPLEMENTARY INFORMATION:

Public Participation and Request for Comments

We encourage you to participate in this rulemaking by submitting comments and related materials. All comments received will be posted without change to *http://www.regulations.gov* and will include any personal information you have provided.

Submitting Comments

If you submit a comment, please include the docket number for this rulemaking (USCG–2010–0002), indicate the specific section of this document to which each comment applies, and provide a reason for each suggestion or recommendation. You may submit your comments and material online (via *http://www.regulations.gov*) or by fax, mail, or hand delivery, but please use only one of these means. If you submit a comment online via *http://www.regulations.gov,* it will be considered received by the Coast Guard when you successfully transmit the comment. If you fax, hand deliver, or mail your comment, it will be considered as having been received by the Coast Guard when it is received at the Docket Management Facility. We recommend that you include your name and a mailing address, an e-mail address, or a telephone number in the body of your document so that we can contact you if we have questions regarding your submission.

To submit your comment online, go to *http://www.regulations.gov,* click on the "submit a comment" box, which will then become highlighted in blue. In the "Document Type" drop down menu select "Proposed Rule" and insert "USCG–2010–0002" in the "Keyword" box. Click "Search" then click on the balloon shape in the "Actions" column. If you submit your comments by mail or hand delivery, submit them in an unbound format, no larger than 8½ by 11 inches, suitable for copying and electronic filing. If you submit comments by mail and would like to know that they reached the Facility, please enclose a stamped, self-addressed postcard or envelope. We will consider all comments and material received during the comment period and may change the rule based on your comments.

Viewing Comments and Documents

To view comments, as well as documents mentioned in this preamble as being available in the docket, go to *http://www.regulations.gov,* click on the "read comments" box, which will then become highlighted in blue. In the "Keyword" box insert "USCG–2010–0002" and click "Search." Click the "Open Docket Folder" in the "Actions" column. You may also visit the Docket Management Facility in Room W12–140 on the ground floor of the Department of Transportation West Building, 1200 New Jersey Avenue, SE., Washington, DC 20590, between 9 a.m. and 5 p.m., Monday through Friday, except Federal holidays. We have an agreement with the Department of Transportation to use the Docket Management Facility.

Privacy Act

Anyone can search the electronic form of comments received into any of our dockets by the name of the individual submitting the comment (or signing the comment, if submitted on behalf of an association, business, labor union, *etc.*). You may review a Privacy Act notice regarding our public dockets in the January 17, 2008, issue of the **Federal Register** (73 FR 3316).

Public Meeting

We do not now plan to hold a public meeting. But you may submit a request for one using one of the four methods specified under **ADDRESSES.** Please explain why you believe a public meeting would be beneficial. If we determine that one would aid this rulemaking, we will hold one at a time and place announced by a later notice in the **Federal Register.**

Background and Purpose

On October 7, 1949 the 4,130-ton gasoline tanker CHEHALIS sank in Pago Pago Inner Harbor, in an estimated 160 feet of water, approximately 350-feet from the fuel dock located near Goat Island Point, Pago Pago, American Samoa. Today, the CHEHALIS wreck remains a potential pollution threat to the environment. The U.S. Coast Guard is scheduled to conduct dive operations to mitigate the wreck's potential pollution threat to the area from March 29, 2010 through April 17, 2010.

Discussion of Proposed Rule

The proposed rule would establish a temporary safety zone extending 200 feet (67 meters) in radius around the wreck CHEHALIS, and from the surface of the water to the ocean floor. The wreck's approximate position is 14°16.52′ S, 170°40.56′ W, and approximately 350 feet north of the fuel dock in Pago Pago Harbor, American Samoa. This safety zone would be effective from 6 a.m. on March 29, 2010 through 8 p.m. on April 17, 2010 (local American Samoa Time). Entry into or remaining in the safety zone during the effective period would be prohibited unless authorized by the Coast Guard Captain of the Port Honolulu.

Regulatory Analyses

We developed this proposed rule after considering numerous statutes and executive orders related to rulemaking. Below we summarize our analyses based on 13 of these statutes or executive orders.

Regulatory Planning and Review

This proposed rule is not a significant regulatory action under section 3(f) of Executive Order 12866, Regulatory Planning and Review, and does not require an assessment of potential costs and benefits under section 6(a)(3) of that Order. The Office of Management and Budget has not reviewed it under that Order.

We expect the economic impact of this rule to be so minimal that a full Regulatory Evaluation is unnecessary. Vessels will be able to transit around the zone, and Sector Honolulu Captain of the Port may allow vessels in the zone on a case-by-case basis.

Small Entities

Under the Regulatory Flexibility Act (5 U.S.C. 601–612), we have considered whether this proposed rule would have a significant economic impact on a substantial number of small entities. The term "small entities" comprises small businesses, not-for-profit organizations that are independently owned and operated and are not dominant in their fields, and governmental jurisdictions with populations of less than 50,000.

The Coast Guard certifies under 5 U.S.C. 605(b) that this proposed rule would not have a significant economic impact on a substantial number of small entities. Vessels will be allowed to transit around the 200-foot temporary Safety Zone that will be centered over the CHEHALIS wreck at approximately 350 feet from the fuel dock in Pago Pago Inner Harbor, American Samoa. If you think that your business, organization, or governmental jurisdiction qualifies as a small entity and that this proposed rule would have a significant economic impact on it, please submit a comment (see **ADDRESSES**) explaining why you think it qualifies and how and to what degree this rule would economically affect it.

Assistance for Small Entities

Under section 213(a) of the Small Business Regulatory Enforcement Fairness Act of 1996 (Pub. L. 104–121), we want to assist small entities in understanding this proposed rule so that they can better evaluate its effects on them and participate in the rulemaking. If the rule would affect your small business, organization, or governmental jurisdiction and you have questions concerning its provisions or options for compliance, please contact Lieutenant Commander Marcella Granquist, Waterways Management Division, U.S. Coast Guard Sector Honolulu, telephone 808–842–2600, e-mail *Marcella.A.Granquist@uscg.mil.* If you wish to comment on actions by employees of the Coast Guard, call 1–888–REG–FAIR (1–888–734–3247). The Coast Guard will not retaliate against small entities that question or complain about this proposed rule or any policy or action of the Coast Guard.

Collection of Information

This proposed rule would call for no new collection of information under the Paperwork Reduction Act of 1995 (44 U.S.C. 3501–3520).

Federalism

A rule has implications for federalism under Executive Order 13132, Federalism, if it has a substantial direct effect on State or local governments and would either preempt State law or impose a substantial direct cost of compliance on them. We have analyzed this proposed rule under that Order and have determined that it does not have implications for federalism.

Unfunded Mandates Reform Act

The Unfunded Mandates Reform Act of 1995 (2 U.S.C. 1531–1538) requires Federal agencies to assess the effects of their discretionary regulatory actions. In particular, the Act addresses actions that may result in the expenditure by a State, local, or tribal government, in the aggregate, or by the private sector of $100,000,000 or more in any one year. Though this proposed rule would not result in such an expenditure, we do discuss the effects of this rule elsewhere in this preamble.

Taking of Private Property

This proposed rule would not effect a taking of private property or otherwise have taking implications under Executive Order 12630, Governmental Actions and Interference with Constitutionally Protected Property Rights.

Civil Justice Reform

This proposed rule meets applicable standards in sections 3(a) and 3(b)(2) of Executive Order 12988, Civil Justice Reform, to minimize litigation, eliminate ambiguity, and reduce burden.

Protection of Children

We have analyzed this proposed rule under Executive Order 13045, Protection of Children from Environmental Health Risks and Safety Risks. This rule is not an economically significant rule and would not create an environmental risk to health or risk to safety that might disproportionately affect children.

Indian Tribal Governments

This proposed rule does not have tribal implications under Executive Order 13175, Consultation and Coordination with Indian Tribal Governments, because it would not have a substantial direct effect on one or more Indian tribes, on the relationship between the Federal Government and Indian tribes, or on the distribution of power and responsibilities between the Federal Government and Indian tribes.

Energy Effects

We have analyzed this proposed rule under Executive Order 13211, Actions Concerning Regulations That Significantly Affect Energy Supply, Distribution, or Use. We have determined that it is not a "significant energy action" under that order because it is not a "significant regulatory action" under Executive Order 12866 and is not likely to have a significant adverse effect on the supply, distribution, or use of energy. The Administrator of the Office of Information and Regulatory Affairs has not designated it as a significant energy action. Therefore, it does not require a Statement of Energy Effects under Executive Order 13211.

Technical Standards

The National Technology Transfer and Advancement Act (NTTAA) (15 U.S.C. 272 note) directs agencies to use voluntary consensus standards in their regulatory activities unless the agency provides Congress, through the Office of Management and Budget, with an explanation of why using these

standards would be inconsistent with applicable law or otherwise impractical. Voluntary consensus standards are technical standards (e.g., specifications of materials, performance, design, or operation; test methods; sampling procedures; and related management systems practices) that are developed or adopted by voluntary consensus standards bodies.

This proposed rule does not use technical standards. Therefore, we did not consider the use of voluntary consensus standards.

Environment

We have analyzed this proposed rule under Department of Homeland Security Management Directive 023–01 and Commandant Instruction M16475.lD, which guide the Coast Guard in complying with the National Environmental Policy Act of 1969 (NEPA) (42 U.S.C. 4321–4370f), and have made a preliminary determination that this action is one of a category of actions which do not individually or cumulatively have a significant effect on the human environment. A preliminary environmental analysis checklist supporting this determination is available in the docket where indicated under **ADDRESSES.** This rule would be categorically excluded, under figure 2–1, paragraph (34)(g), of the Instruction because it would establish a safety zone. We seek any comments or information that may lead to the discovery of a significant environmental impact from this proposed rule.

List of Subjects in 33 CFR Part 165

Harbors, Marine safety, Navigation (water), Reporting and recordkeeping requirements, Security measures, Waterways.

For the reasons discussed in the preamble, the Coast Guard proposes to amend 33 CFR part 165 as follows:

PART 165—REGULATED NAVIGATION AREAS AND LIMITED ACCESS AREAS

1. The authority citation for part 165 continues to read as follows:

Authority: 33 U.S.C. 1226, 1231; 46 U.S.C. Chapter 701, 3306, 3703; 50 U.S.C. 191, 195; 33 CFR 1.05–1, 6.04–1, 6.04–6, and 160.5; Pub. L. 107–295, 116 Stat. 2064; Department of Homeland Security Delegation No. 0170.1.

2. Add § 165.T14–199 to read as follows:

§ 165.T14–199 Safety Zone; Dive Platform Vessel, Pago Pago Harbor, American Samoa.

(a) *Location.* The following area is a temporary safety zone: All waters within a 200 foot (67 meter) radius around the dive platform vessel while it is performing dive operations in and around the CHEHALIS wreck. This safety zone extends from the surface of the water to the ocean floor. The wreck's approximate position is 14°16.52′ S, 170°40.56′ W, which is approximately 350 feet north of the fuel dock in Pago Pago Harbor, American Samoa. These coordinates are based upon the National Oceanic and Atmospheric Administration Coast Survey, Pacific Ocean, Samoa Islands, chart 83484.

(b) *Prohibited activities.* (1) Entry into or remaining in the safety zone described in paragraph (a) of this section is prohibited unless authorized by the Coast Guard Captain of the Port Honolulu.

(2) Persons desiring to transit the safety zone may contact the Captain of the Port at telephone number 1–808–842–2600, the U.S. Coast Guard Marine Safety Detachment American Samoa at telephone number 1–684–633–2299, or the dive platform vessel on VHF channel 16 (156.800 MHz) or VHF channel 13 (156.650 MHz) to seek permission to transit the area. If permission is granted, all persons and vessels must comply with the instructions of the Captain of the Port or his designated representative.

(c) *Effective period.* This rule is effective from 6 a.m. local American Samoa time on March 29, 2010 through 8 p.m. local American Samoa time on April 17, 2010.

(d) *Regulations.* In accordance with the general regulations in 33 CFR part 165, subpart C, no person or vessel may enter or remain in the zone except for support vessels/aircraft and support personnel, or other vessels authorized by the Captain of the Port or his designated representatives.

(e) *Penalties.* Vessels or persons violating this rule would be subject to the penalties set forth in 33 U.S.C. 1232 and 50 U.S.C. 192.

Dated: January 11, 2010.

B.A. Compagnoni,

Captain, U.S. Coast Guard, Captain of the Port Honolulu.

[FR Doc. 2010–2470 Filed 2–4–10; 8:45 am]

BILLING CODE 9110–04–P

DEPARTMENT OF HOMELAND SECURITY

Federal Emergency Management Agency

44 CFR Part 67

[Docket ID FEMA–2010–0003; Internal Agency Docket No. FEMA–B–1085]

Proposed Flood Elevation Determinations

AGENCY: Federal Emergency Management Agency, DHS.

ACTION: Proposed rule.

SUMMARY: Comments are requested on the proposed Base (1% annual-chance) Flood Elevations (BFEs) and proposed BFE modifications for the communities listed in the table below. The purpose of this notice is to seek general information and comment regarding the proposed regulatory flood elevations for the reach described by the downstream and upstream locations in the table below. The BFEs and modified BFEs are a part of the floodplain management measures that the community is required either to adopt or show evidence of having in effect in order to qualify or remain qualified for participation in the National Flood Insurance Program (NFIP). In addition, these elevations, once finalized, will be used by insurance agents, and others to calculate appropriate flood insurance premium rates for new buildings and the contents in those buildings.

DATES: Comments are to be submitted on or before May 6, 2010.

ADDRESSES: The corresponding preliminary Flood Insurance Rate Map (FIRM) for the proposed BFEs for each community is available for inspection at the community's map repository. The respective addresses are listed in the table below.

You may submit comments, identified by Docket No. FEMA–B–1085, to Kevin C. Long, Acting Chief, Engineering Management Branch, Mitigation Directorate, Federal Emergency Management Agency, 500 C Street, SW., Washington, DC 20472, (202) 646–2820, or (e-mail) *kevin.long@dhs.gov.*

FOR FURTHER INFORMATION CONTACT: Kevin C. Long, Acting Chief, Engineering Management Branch, Mitigation Directorate, Federal Emergency Management Agency, 500 C Street, SW., Washington, DC 20472, (202) 646–2820, or (e-mail) *kevin.long@dhs.gov.*

SUPPLEMENTARY INFORMATION: The Federal Emergency Management Agency (FEMA) proposes to make

determinations of BFEs and modified BFEs for each community listed below, in accordance with section 110 of the Flood Disaster Protection Act of 1973, 42 U.S.C. 4104, and 44 CFR 67.4(a).

These proposed BFEs and modified BFEs, together with the floodplain management criteria required by 44 CFR 60.3, are the minimum that are required. They should not be construed to mean that the community must change any existing ordinances that are more stringent in their floodplain management requirements. The community may at any time enact stricter requirements of its own, or pursuant to policies established by other Federal, State, or regional entities. These proposed elevations are used to meet the floodplain management requirements of the NFIP and are also used to calculate the appropriate flood insurance premium rates for new buildings built after these elevations are made final, and for the contents in these buildings.

Comments on any aspect of the Flood Insurance Study and FIRM, other than the proposed BFEs, will be considered. A letter acknowledging receipt of any comments will not be sent.

National Environmental Policy Act. This proposed rule is categorically excluded from the requirements of 44 CFR part 10, Environmental Consideration. An environmental impact assessment has not been prepared.

Regulatory Flexibility Act. As flood elevation determinations are not within the scope of the Regulatory Flexibility Act, 5 U.S.C. 601–612, a regulatory flexibility analysis is not required.

Executive Order 12866, Regulatory Planning and Review. This proposed rule is not a significant regulatory action under the criteria of section 3(f) of Executive Order 12866, as amended.

Executive Order 13132, Federalism. This proposed rule involves no policies that have federalism implications under Executive Order 13132.

Executive Order 12988, Civil Justice Reform. This proposed rule meets the applicable standards of Executive Order 12988.

List of Subjects in 44 CFR Part 67

Administrative practice and procedure, Flood insurance, Reporting and recordkeeping requirements.

Accordingly, 44 CFR part 67 is proposed to be amended as follows:

PART 67—[AMENDED]

1. The authority citation for part 67 continues to read as follows:

Authority: 42 U.S.C. 4001 *et seq.;* Reorganization Plan No. 3 of 1978, 3 CFR, 1978 Comp., p. 329; E.O. 12127, 44 FR 19367, 3 CFR, 1979 Comp., p. 376.

§ 67.4 [Amended]

2. The tables published under the authority of § 67.4 are proposed to be amended as follows:

State	City/town/county	Source of flooding	Location **	* Elevation in feet (NGVD) + Elevation in feet (NAVD) # Depth in feet above ground ∧ Elevation in meters (MSL)	
				Existing	Modified
Village of Yellow Springs, Ohio					
Ohio	Village of Yellow Springs.	Yellow Springs Creek	Approximately 0.8 mile upstream of Grinnell Road.	None	+886
			Approximately 0.7 mile downstream of Fairfield Road.	None	+905

* National Geodetic Vertical Datum.
+ North American Vertical Datum.
# Depth in feet above ground.
∧ Mean Sea Level, rounded to the nearest 0.1 meter.

** BFEs to be changed include the listed downstream and upstream BFEs, and include BFEs located on the stream reach between the referenced locations above. Please refer to the revised Flood Insurance Rate Map located at the community map repository (see below) for exact locations of all BFEs to be changed.

Send comments to Kevin C. Long, Acting Chief, Engineering Management Branch, Mitigation Directorate, Federal Emergency Management Agency, 500 C Street, SW., Washington, DC 20472.

ADDRESSES

Village of Yellow Springs
Maps are available for inspection at 100 Dayton Street, Yellow Springs, OH 45387.

Flooding source(s)	Location of referenced elevation **	* Elevation in feet (NGVD) + Elevation in feet (NAVD) # Depth in feet above ground ∧ Elevation in meters (MSL)		Communities affected
		Effective	Modified	
Chambers County, Alabama, and Incorporated Areas				
Hardley Creek (Backwater effects from Chattahoochee River).	From the confluence with the Chattahoochee River to approximately 0.53 mile upstream of Stateline Road.	+580	+579	Unincorporated Areas of Chambers County.
Oseligee Creek	Approximately 1.5 mile downstream of Fredonia Highway.	+577	+576	Unincorporated Areas of Chambers County.
	Just downstream of Fredonia Highway	+578	+576	

Flooding source(s)	Location of referenced elevation **	* Elevation in feet (NGVD) + Elevation in feet (NAVD) # Depth in feet above ground ∧ Elevation in meters (MSL)		Communities affected
		Effective	Modified	

* National Geodetic Vertical Datum.
+ North American Vertical Datum.
# Depth in feet above ground.
∧ Mean Sea Level, rounded to the nearest 0.1 meter.
** BFEs to be changed include the listed downstream and upstream BFEs, and include BFEs located on the stream reach between the referenced locations above. Please refer to the revised Flood Insurance Rate Map located at the community map repository (see below) for exact locations of all BFEs to be changed.

Send comments to Kevin C. Long, Acting Chief, Engineering Management Branch, Mitigation Directorate, Federal Emergency Management Agency, 500 C Street, SW., Washington, DC 20472.

ADDRESSES

Unincorporated Areas of Chambers County

Maps are available for inspection at 2 South LaFayette Street, Alabama, AL 36862.

Ashley County, Arkansas, and Incorporated Areas

Snake Creek	Approximately 1,400 feet downstream of Main Street	None	+131	City of Crossett.
	Approximately 1,200 feet downstream of Main Street	None	+131	

* National Geodetic Vertical Datum.
+ North American Vertical Datum.
# Depth in feet above ground.
∧ Mean Sea Level, rounded to the nearest 0.1 meter.
** BFEs to be changed include the listed downstream and upstream BFEs, and include BFEs located on the stream reach between the referenced locations above. Please refer to the revised Flood Insurance Rate Map located at the community map repository (see below) for exact locations of all BFEs to be changed.

Send comments to Kevin C. Long, Acting Chief, Engineering Management Branch, Mitigation Directorate, Federal Emergency Management Agency, 500 C Street, SW., Washington, DC 20472.

ADDRESSES

City of Crossett

Maps are available for inspection at City Hall, Main Street, Crossett, AR 71635.

Hempstead County, Arkansas, and Incorporated Areas

Black Branch	Approximately 0.60 mile downstream of County Highway 118.	None	+318	Unincorporated Areas of Hempstead County.
	Approximately 1,850 feet upstream of Patmos Road	None	+364	
North Tributary to Caney Creek.	Approximately 1,200 feet downstream of Interstate Highway 30.	None	+288	Unincorporated Areas of Hempstead County.
	Approximately 1,700 feet upstream of Interstate Highway 30.	None	+302	
Pate Creek	Approximately 0.62 mile downstream of South Phillips Drive.	None	+278	Unincorporated Areas of Hempstead County.
	Just upstream of County Highway 248	None	+311	
Tributary to Caney Creek	Approximately 0.41 mile downstream of West 3rd Street.	None	+285	Unincorporated Areas of Hempstead County.
	Approximately 1,800 feet upstream of West 3rd Street	None	+299	
Tributary to Pate Creek	At the confluence with Pate Creek	None	+301	Unincorporated Areas of Hempstead County.
	Approximately 700 feet downstream of Bill Clinton Drive.	None	+319	

* National Geodetic Vertical Datum.
+ North American Vertical Datum.
# Depth in feet above ground.
∧ Mean Sea Level, rounded to the nearest 0.1 meter.
** BFEs to be changed include the listed downstream and upstream BFEs, and include BFEs located on the stream reach between the referenced locations above. Please refer to the revised Flood Insurance Rate Map located at the community map repository (see below) for exact locations of all BFEs to be changed.

Send comments to Kevin C. Long, Acting Chief, Engineering Management Branch, Mitigation Directorate, Federal Emergency Management Agency, 500 C Street, SW., Washington, DC 20472.

ADDRESSES

Unincorporated Areas of Hempstead County

Maps are available for inspection at the County Courthouse, 400 South Washington Street, Hope, AR 71801.

Flooding source(s)	Location of referenced elevation **	* Elevation in feet (NGVD) + Elevation in feet (NAVD) # Depth in feet above ground ∧ Elevation in meters (MSL)		Communities affected
		Effective	Modified	
Cumberland County, Illinois, and Incorporated Areas				
Embarras River	Approximately 600 feet downstream of River Road extended.	None	+517	Village of Jewett.
	Approximately 1,150 feet upstream of River Road extended.	None	+518	

* National Geodetic Vertical Datum.
+ North American Vertical Datum.
# Depth in feet above ground.
∧ Mean Sea Level, rounded to the nearest 0.1 meter.
** BFEs to be changed include the listed downstream and upstream BFEs, and include BFEs located on the stream reach between the referenced locations above. Please refer to the revised Flood Insurance Rate Map located at the community map repository (see below) for exact locations of all BFEs to be changed.

Send comments to Kevin C. Long, Acting Chief, Engineering Management Branch, Mitigation Directorate, Federal Emergency Management Agency, 500 C Street, SW., Washington, DC 20472.

ADDRESSES

Village of Jewett
Maps are available for inspection at the Village Hall, 2 North 12th Avenue, Jewett, IL 62436.

Fulton County, Illinois, and Incorporated Areas				
Copperas Creek	Approximately 0.52 mile downstream of U.S. Highway 24.	+455	+454	Unincorporated Areas of Fulton County, Village of Banner.
	Approximately 0.51 mile upstream of U.S. Highway 24.	+455	+454	
Illinois River	Approximately 0.88 mile downstream of County Highway 9 extended.	+454	+453	Unincorporated Areas of Fulton County, Village of Banner, Village of Liverpool.
	Approximately 1.09 mile upstream of Marsh Road extended.	+455	+454	

* National Geodetic Vertical Datum.
+ North American Vertical Datum.
# Depth in feet above ground.
∧ Mean Sea Level, rounded to the nearest 0.1 meter.
** BFEs to be changed include the listed downstream and upstream BFEs, and include BFEs located on the stream reach between the referenced locations above. Please refer to the revised Flood Insurance Rate Map located at the community map repository (see below) for exact locations of all BFEs to be changed.

Send comments to Kevin C. Long, Acting Chief, Engineering Management Branch, Mitigation Directorate, Federal Emergency Management Agency, 500 C Street, SW., Washington, DC 20472.

ADDRESSES

Unincorporated Areas of Fulton County
Maps are available for inspection at the County Courthouse, Supervisor's Office, 100 North Main Street, Lewistown, IL 61542.

Village of Banner
Maps are available for inspection at the Village Hall, 396 South Fulton Street, Banner, IL 61520.

Village of Liverpool
Maps are available for inspection at the Village Hall, 116 South State Street, Liverpool, IL 61543.

Putnam County, Illinois, and Incorporated Areas				
Illinois River	Approximately 0.83 mile downstream of the I–180 bridge.	+463	+462	Unincorporated Areas of Putnam County, Village of Hennepin.
	Approximately 1.93 mile upstream of the IL–89 bridge	+466	+463	

* National Geodetic Vertical Datum.
+ North American Vertical Datum.
# Depth in feet above ground.
∧ Mean Sea Level, rounded to the nearest 0.1 meter.
** BFEs to be changed include the listed downstream and upstream BFEs, and include BFEs located on the stream reach between the referenced locations above. Please refer to the revised Flood Insurance Rate Map located at the community map repository (see below) for exact locations of all BFEs to be changed.

Flooding source(s)	Location of referenced elevation **	* Elevation in feet (NGVD) + Elevation in feet (NAVD) # Depth in feet above ground ∧ Elevation in meters (MSL)		Communities affected
		Effective	Modified	

Send comments to Kevin C. Long, Acting Chief, Engineering Management Branch, Mitigation Directorate, Federal Emergency Management Agency, 500 C Street, SW., Washington, DC 20472.

ADDRESSES

Unincorporated Areas of Putnam County

Maps are available for inspection at the County Courthouse, 120 North 4th Street, Hennepin, IL 61327.

Village of Hennepin

Maps are available for inspection at the Village Hall, 627 East High Street, Hennepin, IL 61327.

Ballard County, Kentucky, and Incorporated Areas

Cane Creek (Backwater effects from Mississippi River).	From the confluence with Shawnee Creek Slough to approximately 2.3 miles upstream of the confluence with Shawnee Creek Slough.	+331	+330	Unincorporated Areas of Ballard County.
Hazel Creek (Backwater effects from Ohio River).	From the confluence with Brushy Pond Creek to approximately 3.2 miles upstream of the confluence with Brushy Pond Creek.	+332	+331	Unincorporated Areas of Ballard County.
Humphrey Creek (Backwater effects from Ohio River).	From the confluence with Lucy Creek to approximately 2,007 feet upstream of the confluence with Lucy Creek.	+332	+331	Unincorporated Areas of Ballard County.
Humphrey Creek Tributary 9 (Backwater effects from Ohio River).	From the confluence with Humphrey Creek to approximately 1,320 feet upstream of the confluence with Humphrey Creek.	+332	+331	Unincorporated Areas of Ballard County.
Lucy Creek (Backwater effects from Ohio River).	From the confluence with Humphrey Creek to approximately 0.45 mile upstream of the confluence with Humphrey Creek.	+332	+331	Unincorporated Areas of Ballard County.
Mississippi River	Approximately 3.5 miles downstream of the confluence with the Ohio River.	+330	+329	Unincorporated Areas of Ballard County.
	Approximately 0.5 mile upstream of the confluence with the Ohio River.	+331	+330	
Ohio River	Approximately 3.0 miles upstream of the confluence with the Mississippi River.	+331	+330	Unincorporated Areas of Ballard County.
	Approximately 6.3 miles upstream of Lock and Dam 53.	+335	+334	
Stovall Creek (Backwater effects from Mississippi River).	From the confluence with the Mississippi River to approximately 1 mile upstream of Mayfield Road.	+330	+329	Unincorporated Areas of Ballard County.

* National Geodetic Vertical Datum.

+ North American Vertical Datum.

Depth in feet above ground.

∧ Mean Sea Level, rounded to the nearest 0.1 meter.

** BFEs to be changed include the listed downstream and upstream BFEs, and include BFEs located on the stream reach between the referenced locations above. Please refer to the revised Flood Insurance Rate Map located at the community map repository (see below) for exact locations of all BFEs to be changed.

Send comments to Kevin C. Long, Acting Chief, Engineering Management Branch, Mitigation Directorate, Federal Emergency Management Agency, 500 C Street, SW., Washington, DC 20472.

ADDRESSES

Unincorporated Areas of Ballard County

Maps are available for inspection at 134 North 4th Street, Wickliffe, KY 42087.

Hickman County, Kentucky, and Incorporated Areas

Bayou de Chien (Backwater effects from Mississippi River).	From the confluence with Bayou de Chien Tributary 12 to approximately 0.52 mile upstream of the confluence with Bayou de Chien Tributary 12.	None	+321	Unincorporated Areas of Hickman County.
Bayou de Chien Tributary 12 (Backwater effects from Mississippi River).	From the confluence with Bayou de Chien to approximately 1,900 feet upstream of the confluence with Bayou de Chien.	None	+321	Unincorporated Areas of Hickman County.
Bowles Creek (Backwater effects from Mississippi River).	From the confluence with Obion Creek to approximately 1.1 mile upstream of the confluence with Obion Creek.	None	+322	Unincorporated Areas of Hickman County.
Cane Creek (Backwater effects from Mississippi River).	From the confluence with Obion Creek to approximately 3.1 miles upstream of the confluence with Obion Creek.	None	+322	Unincorporated Areas of Hickman County.

Flooding source(s)	Location of referenced elevation **	* Elevation in feet (NGVD) + Elevation in feet (NAVD) # Depth in feet above ground ∧ Elevation in meters (MSL)		Communities affected
		Effective	Modified	
Cane Creek II (Backwater effects from Mississippi River).	From the confluence with Bayou de Chien to approximately 0.8 mile upstream of the confluence with Bayou de Chien.	None	+321	Unincorporated Areas of Hickman County.
Cane Creek II Tributary 1.3 (Backwater effects from Mississippi River).	From the confluence with Cane Creek II to approximately 0.6 mile upstream of the confluence with Cane Creek II.	None	+321	Unincorporated Areas of Hickman County.
Hollingsworth Creek (Backwater effects from Mississippi River).	From the confluence with Obion Creek to approximately 1.4 mile upstream of the confluence with Obion Creek.	None	+322	Unincorporated Areas of Hickman County.
Hurricane Branch (Backwater effects from Mississippi River).	From the confluence with Bayou de Chien to approximately 1.1 miles upstream of the confluence with Bayou de Chien.	None	+321	Unincorporated Areas of Hickman County.
Mississippi River	Approximately 6.3 miles upstream of the confluence of Obion Creek in Fulton County.	None	+322	Unincorporated Areas of Hickman County.
	Approximately 0.5 mile upstream of the confluence with Sandy Branch.	None	+325	
Obion Creek (Backwater effects from Mississippi River).	Approximately 1.2 mile downstream of the confluence with Whayne Branch.	None	+322	Unincorporated Areas of Hickman County.
Obion Creek Tributary 18 (Backwater effects from Mississippi River).	From the confluence with Obion Creek to approximately 1.9 mile upstream of the confluence with Obion Creek.	None	+322	Unincorporated Areas of Hickman County.
Whayne Branch (Backwater effects from Mississippi River).	From the confluence with Obion Creek to approximately 5.2 miles upstream of the confluence with Obion Creek.	None	+322	Unincorporated Areas of Hickman County.

* National Geodetic Vertical Datum.
+ North American Vertical Datum.
# Depth in feet above ground.
∧ Mean Sea Level, rounded to the nearest 0.1 meter.
** BFEs to be changed include the listed downstream and upstream BFEs, and include BFEs located on the stream reach between the referenced locations above. Please refer to the revised Flood Insurance Rate Map located at the community map repository (see below) for exact locations of all BFEs to be changed.

Send comments to Kevin C. Long, Acting Chief, Engineering Management Branch, Mitigation Directorate, Federal Emergency Management Agency, 500 C Street, SW., Washington, DC 20472.

ADDRESSES

Unincorporated Areas of Hickman County

Maps are available for inspection at 110 East Clay Street, Clinton, KY 42031.

Webster County, Kentucky, and Incorporated Areas

Bailey Ditch (Backwater effects from Green River).	From the confluence with Knoblick Creek to approximately 0.93 mile upstream of the confluence with Knoblick Creek.	None	+387	Unincorporated Areas of Webster County.
Deer Creek (Backwater effects from Green River).	From the confluence with East Fork Deer Creek to approximately 1.5 mile upstream of the confluence with East Fork Deer Creek.	None	+387	Unincorporated Areas of Webster County.
East Fork Deer Creek Tributary 1 (Backwater effects from Green River).	From the confluence with Deer Creek to approximately 2.7 miles upstream of the confluence with Deer Creek.	None	+387	Unincorporated Areas of Webster County.
Green River	At approximately 1.5 mile downstream of the confluence with Groves Creek.	None	+386	Unincorporated Areas of Webster County.
	At approximately 5.2 miles upstream of the confluence with Deer Creek.	None	+388	
Green River Tributary 219 (Backwater effects from Green River).	From the confluence with the Green River to approximately 1.5 mile upstream of the confluence with the Green River.	None	+387	Unincorporated Areas of Webster County.
Groves Creek (Backwater effects from Green River).	From the confluence with the Green River to approximately 5.9 miles upstream of the confluence with the Green River.	None	+386	Unincorporated Areas of Webster County.
Knoblick Creek (Backwater effects from Green River).	From the confluence with Deer Creek to approximately 2.8 miles upstream of the confluence with Deer Creek.	None	+387	Unincorporated Areas of Webster County.
Mock Roy Creek (Backwater effects from Green River).	From the confluence with the Green River to approximately 2.5 miles upstream of the confluence with the Green River.	None	+386	Unincorporated Areas of Webster County.

Flooding source(s)	Location of referenced elevation **	* Elevation in feet (NGVD) + Elevation in feet (NAVD) # Depth in feet above ground ∧ Elevation in meters (MSL)		Communities affected
		Effective	Modified	
Pitman Creek (Backwater effects from Green River).	Approximately 1,690 feet upstream of State Highway KY–370.	None	+388	Unincorporated Areas of Webster County.
	At approximately 3.8 miles upstream of the confluence with the Green River.	None	+388	

* National Geodetic Vertical Datum.
+ North American Vertical Datum.
# Depth in feet above ground.
∧ Mean Sea Level, rounded to the nearest 0.1 meter.
** BFEs to be changed include the listed downstream and upstream BFEs, and include BFEs located on the stream reach between the referenced locations above. Please refer to the revised Flood Insurance Rate Map located at the community map repository (see below) for exact locations of all BFEs to be changed.

Send comments to Kevin C. Long, Acting Chief, Engineering Management Branch, Mitigation Directorate, Federal Emergency Management Agency, 500 C Street, SW., Washington, DC 20472.

ADDRESSES

Unincorporated Areas of Webster County

Maps are available for inspection at 35 South U.S. 41A, Dixon, KY 42409.

Assumption Parish, Louisiana, and Incorporated Areas

Flooding Effects of Lake Verret.	Approximately 1.14 mile south of the intersection of 69 State Highway and 70 State Highway.	+6	+3	Unincorporated Areas of Assumption Parish.
	Approximately 2.46 miles south of the intersection of 182 State Highway and 662 State Highway.	+6	+8	
Lake Verret	At the intersection of U.S. Highway 90 and State Highway 662.	None	+3	Unincorporated Areas of Assumption Parish.
	Along shoreline 2.5 miles east of State Highway 70 ...	None	+8	

* National Geodetic Vertical Datum.
+ North American Vertical Datum.
# Depth in feet above ground.
∧ Mean Sea Level, rounded to the nearest 0.1 meter.
** BFEs to be changed include the listed downstream and upstream BFEs, and include BFEs located on the stream reach between the referenced locations above. Please refer to the revised Flood Insurance Rate Map located at the community map repository (see below) for exact locations of all BFEs to be changed.

Send comments to Kevin C. Long, Acting Chief, Engineering Management Branch, Mitigation Directorate, Federal Emergency Management Agency, 500 C Street, SW., Washington, DC 20472.

ADDRESSES

Unincorporated Areas of Assumption Parish

Maps are available for inspection at the Assumption Parish Hall, 4813 Highway 1, Napoleonville, LA 70390.

East Feliciana Parish, Louisiana, and Incorporated Areas

Amite River	Approximately 2.0 miles downstream of State Highway 37.	None	+110	Unincorporated Areas of East Feliciana Parish.
	Just downstream from the northeast corner of the county line.	None	+205	
Pretty Creek	Flooding effects from Pretty Creek extending 1.0 mile west and 1.0 mile east from the confluence with the Comite River.	None	+170	Unincorporated Areas of East Feliciana Parish.
	Flooding effects from Pretty Creek extending 1.5 mile west from State Highway 10.	None	+183	

* National Geodetic Vertical Datum.
+ North American Vertical Datum.
# Depth in feet above ground.
∧ Mean Sea Level, rounded to the nearest 0.1 meter.
** BFEs to be changed include the listed downstream and upstream BFEs, and include BFEs located on the stream reach between the referenced locations above. Please refer to the revised Flood Insurance Rate Map located at the community map repository (see below) for exact locations of all BFEs to be changed.

Send comments to Kevin C. Long, Acting Chief, Engineering Management Branch, Mitigation Directorate, Federal Emergency Management Agency, 500 C Street, SW., Washington, DC 20472.

Flooding source(s)	Location of referenced elevation**	* Elevation in feet (NGVD) + Elevation in feet (NAVD) # Depth in feet above ground ∧ Elevation in meters (MSL)		Communities affected
		Effective	Modified	
ADDRESSES				
Unincorporated Areas of East Feliciana Parish				
Maps are available for inspection at 12064 Marston Street, Clinton, LA 70722.				
Wicomico County, Maryland, and Incorporated Areas				
Andrews Branch	Approximately 50 feet upstream of Gordy Mill Road	None	+42	Unincorporated Areas of Wicomico County.
	Approximately 350 feet upstream of Gordy Mill Road	None	+42	
Beaglin Branch	Just upstream of Mount Hermon Road	None	+34	Unincorporated Areas of Wicomico County, City of Salisbury.
	Just upstream of Tilghman Road	None	+35	
Brewington Branch	Just upstream of Conrail	+28	+31	Unincorporated Areas of Wicomico County, City of Salisbury.
	Approximately 1,000 feet upstream of Salisbury Bypass (U.S. Routes 50 and 13).	None	+34	
Coty Cox Branch	Approximately 100 feet upstream of Jersey Road	None	+29	Unincorporated Areas of Wicomico County.
	Approximately 1,700 feet upstream of Jersey Road	None	+30	
Mayer Branch	Just upstream of Gordy Mill Road	None	+40	Unincorporated Areas of Wicomico County, Town of Delmar.
	Approximately 1,480 feet upstream of Gordy Mill Road.	None	+43	
Middle Neck Branch	Approximately 200 feet upstream of the confluence with Johnson Pond.	+13	+15	Unincorporated Areas of Wicomico County, City of Salisbury.
	Approximately 2,000 feet upstream of Salisbury Bypass (U.S. Routes 50 and 13).	None	+37	
Morris Prong	At Jackson Road	+34	+38	Unincorporated Areas of Wicomico County.
	Approximately 200 feet upstream of Jackson Road	None	+38	
Owens Branch	Just upstream of Private Drive (located approximately 700 feet upstream of Nanticoke Road).	None	+13	Unincorporated Areas of Wicomico County.
	Approximately 2,100 feet upstream of Private Drive (located approximately 700 feet upstream of Nanticoke Road).	None	+16	
Peggy Branch	At the confluence with Middle Neck Branch	+30	+32	Unincorporated Areas of Wicomico County, City of Salisbury.
	Just downstream of Aydelotte Road	+30	+32	
Slab Bridge Creek	Just upstream of Division Street	+21	+22	Unincorporated Areas of Wicomico County, City of Fruitland.
	Just downstream of Salisbury Bypass (U.S. Routes 13 and 50).	+23	+25	
Tonytank Creek	Just downstream of Riverside Drive	+7	+9	Unincorporated Areas of Wicomico County.
	At Nutters Cross Road	+35	+40	
Tuxents Branch	At the confluence with Tonytank Creek	+7	+9	Unincorporated Areas of Wicomico County, City of Fruitland.
	Approximately 700 feet upstream of Camden Avenue	None	+19	
Unnamed Tributary to Beaglin Branch.	At Mount Hermon Road	+30	+36	Unincorporated Areas of Wicomico County, City of Salisbury.
	Approximately 100 feet upstream of Mount Hermon Road.	None	+36	
White Marsh Creek	Just upstream of Nutters Cross Road	None	+40	Unincorporated Areas of Wicomico County.
	Approximately 600 feet upstream of Nutters Cross Road.	None	+40	

* National Geodetic Vertical Datum.
+ North American Vertical Datum.
# Depth in feet above ground.

Flooding source(s)	Location of referenced elevation **	* Elevation in feet (NGVD) + Elevation in feet (NAVD) # Depth in feet above ground ∧ Elevation in meters (MSL)		Communities affected
		Effective	Modified	

∧ Mean Sea Level, rounded to the nearest 0.1 meter.

** BFEs to be changed include the listed downstream and upstream BFEs, and include BFEs located on the stream reach between the referenced locations above. Please refer to the revised Flood Insurance Rate Map located at the community map repository (see below) for exact locations of all BFEs to be changed.

Send comments to Kevin C. Long, Acting Chief, Engineering Management Branch, Mitigation Directorate, Federal Emergency Management Agency, 500 C Street, SW., Washington, DC 20472.

ADDRESSES

City of Fruitland
Maps are available for inspection at City Hall, 20 Shady Lane, Fruitland, MD 21826.

City of Salisbury
Maps are available for inspection at City Hall, 125 North Division Street, Salisbury, MD 21801.

Town of Delmar
Maps are available for inspection at the Town Hall, East Saint Penn Avenue, Delmar, MD 21875.

Unincorporated Areas of Wicomico County
Maps are available for inspection at the Government Office Building, 125 North Division Street, Room 203, Salisbury, MD 21803.

Calhoun County, Michigan, and Incorporated Areas

Duck Lake	Entire shoreline	None	+930	Township of Clarence.
Kalamazoo River	Approximately 705 feet downstream of 20th Street	None	+807	City of Springfield.
	Approximately 0.33 mile upstream of Angell Street	None	+808	
Kalamazoo River	Approximately 5 miles upstream of Interstate 69 North	None	+881	Township of Marshall.
	Approximately 200 feet downstream of Kalamazoo Avenue.	None	+885	
Kalamazoo River	Approximately 1.08 mile upstream of 23 Mile Road	None	+919	Township of Sheridan.
	Approximately 1.1 mile upstream of 23 Mile Road	None	+919	
	Approximately 1.08 mile downstream of Albion Street	None	+929	
	Approximately 0.7 mile downstream of Albion Street	None	+930	
Lyon Lake	Entire shoreline	None	+941	Township of Frendonia.
North Branch Kalamazoo River.	Approximately 225 feet upstream of 29½ Mile Road	None	+947	Township of Sheridan.
	Approximately 0.75 mile upstream of 29½ Mile Road	None	+947	

* National Geodetic Vertical Datum.
+ North American Vertical Datum.
# Depth in feet above ground.
∧ Mean Sea Level, rounded to the nearest 0.1 meter.

** BFEs to be changed include the listed downstream and upstream BFEs, and include BFEs located on the stream reach between the referenced locations above. Please refer to the revised Flood Insurance Rate Map located at the community map repository (see below) for exact locations of all BFEs to be changed.

Send comments to Kevin C. Long, Acting Chief, Engineering Management Branch, Mitigation Directorate, Federal Emergency Management Agency, 500 C Street, SW., Washington, DC 20472.

ADDRESSES

City of Springfield
Maps are available for inspection at 601 Avenue A, Springfield, MI 49037.

Township of Clarence
Maps are available for inspection at 27052 R Drive North, Albion, MI 49224.

Township of Frendonia
Maps are available for inspection at 8803 17 Mile Road, Marshall, MI 49068.

Township of Marshall
Maps are available for inspection at 13551 Myron Avery Drive, Marshall, MI 49068.

Township of Sheridan
Maps are available for inspection at 13355 29th Mile Road, Albion, MI 49224.

Fulton County, Ohio, and Incorporated Areas

Bad Creek	Approximately 1,200 feet downstream of State Highway 109.	None	+694	Village of Delta.
	Approximately 50 feet downstream of State Highway 109.	None	+697	
Brush Creek	Approximately 0.5 mile upstream of County Highway 24.	None	+713	Village of Archbold.
	Approximately 100 feet upstream of County Highway 22.	None	+724	

Flooding source(s)	Location of referenced elevation**	* Elevation in feet (NGVD) + Elevation in feet (NAVD) # Depth in feet above ground ∧ Elevation in meters (MSL)		Communities affected
		Effective	Modified	
North Turkeyfoot Creek	Approximately 0.7 mile upstream of County Highway 13.	None	+742	City of Wauseon.
	Approximately 0.8 mile upstream of County Highway 13.	None	+743	

* National Geodetic Vertical Datum.
+ North American Vertical Datum.
# Depth in feet above ground.
∧ Mean Sea Level, rounded to the nearest 0.1 meter.
** BFEs to be changed include the listed downstream and upstream BFEs, and include BFEs located on the stream reach between the referenced locations above. Please refer to the revised Flood Insurance Rate Map located at the community map repository (see below) for exact locations of all BFEs to be changed.

Send comments to Kevin C. Long, Acting Chief, Engineering Management Branch, Mitigation Directorate, Federal Emergency Management Agency, 500 C Street, SW., Washington, DC 20472.

ADDRESSES

City of Wauseon
Maps are available for inspection at City Hall, 230 Clinton Street, Wauseon, OH 43567.

Village of Archbold
Maps are available for inspection at the Municipal Building, 300 North Defiance Street, Archbold, OH 43502.

Village of Delta
Maps are available for inspection at Memorial Hall, 401 Main Street, Delta, OH 43515.

Highland County, Ohio, and Incorporated Areas

.				
Clear Creek	Approximately 1.4 mile upstream of State Route 138	None	+938	City of Hillsboro, Unincorporated Areas of Highland County.
	Approximately 2.0 miles upstream of State Route 138	None	+943	
Turtle Creek	At the confluence with East Fork Little Miami River	None	+985	Unincorporated Areas of Highland County.
	Just downstream of Sycamore Street	None	+991	
	Approximately 1,840 feet upstream of Sycamore Street.	None	+996	
	Approximately 0.4 mile upstream of Sycamore Street	None	+996	

* National Geodetic Vertical Datum.
+ North American Vertical Datum.
# Depth in feet above ground.
∧ Mean Sea Level, rounded to the nearest 0.1 meter.
** BFEs to be changed include the listed downstream and upstream BFEs, and include BFEs located on the stream reach between the referenced locations above. Please refer to the revised Flood Insurance Rate Map located at the community map repository (see below) for exact locations of all BFEs to be changed.

Send comments to Kevin C. Long, Acting Chief, Engineering Management Branch, Mitigation Directorate, Federal Emergency Management Agency, 500 C Street, SW., Washington, DC 20472.

ADDRESSES

City of Hillsboro
Maps are available for inspection at City Hall, 130 North High Street, Hillsboro, OH 45133.

Unincorporated Areas of Highland County
Maps are available for inspection at 119 Governor Forraker Place, Second Floor, Suite 206, Highland, OH 45133.

Perry County, Ohio, and Incorporated Areas

Black Fork (Backwater effects from Moxahala Creek).	Upstream side of Ceramic Road	None	+755	Unincorporated Areas of Perry County.
	Confluence with Moxahala Creek	None	+755	
Brehm Run	Confluence with Center Branch Rush Creek	None	+824	Unincorporated Areas of Perry County.
	Approximately 1,640 feet upstream of Toll Gate Road	None	+838	
Buckeye Lake	Entire shoreline	None	+893	Unincorporated Areas of Perry County.
Center Branch Rush Creek ..	Confluence with Rush Creek	+812	+811	Unincorporated Areas of Perry County.
	Approximately 0.9 mile upstream of State Route 668	None	+856	

Flooding source(s)	Location of referenced elevation**	* Elevation in feet (NGVD) + Elevation in feet (NAVD) # Depth in feet above ground ∧ Elevation in meters (MSL)		Communities affected
		Effective	Modified	
Clark Run	Approximately 0.7 mile downstream of the confluence with Salem Run.	None	+805	Unincorporated Areas of Perry County.
	Approximately 0.9 mile upstream of Mainesville Road	None	+819	
Jonathan Creek	Approximately 900 feet downstream of Main Street in the Village of Glenford.	None	+843	Unincorporated Areas of Perry County.
	Approximately 830 feet upstream of State Route 204	None	+847	
Lideys Run	Confluence with Center Branch Rush Creek	None	+813	Unincorporated Areas of Perry County.
	Approximately 220 feet upstream of Pen Road	None	+817	
Moxahala Creek	Confluence with Black Fork	None	+755	Unincorporated Areas of Perry County, Village of Crooksville.
	Approximately 1,380 feet upstream of State Route 669.	None	+760	
Rush Creek	Approximately 1.0 mile downstream of Flagdale Road	+806	+805	Unincorporated Areas of Perry County.
	Approximately 240 feet downstream of the confluence with Center Branch Rush Creek.	+811	+810	
Salem Run	Confluence with Clark Run	None	+806	Unincorporated Areas of Perry County.
	Approximately 0.6 mile upstream of Flagdale Road	None	+824	
Sunday Creek	Approximately 0.8 mile downstream of Main Street in the Village of Corning.	None	+724	Unincorporated Areas of Perry County, Village of Corning.
	Approximately 890 feet upstream of Adams Street in the Village of Corning.	None	+735	
West Branch Sunday Creek	Approximately 1,760 feet downstream of Main Street in the Village of Hemlock.	None	+760	Unincorporated Areas of Perry County, Village of Hemlock.
	Approximately 1,700 feet upstream of Main Street in the Village of Hemlock.	None	+767	

* National Geodetic Vertical Datum.
+ North American Vertical Datum.
# Depth in feet above ground.
∧ Mean Sea Level, rounded to the nearest 0.1 meter.
** BFEs to be changed include the listed downstream and upstream BFEs, and include BFEs located on the stream reach between the referenced locations above. Please refer to the revised Flood Insurance Rate Map located at the community map repository (see below) for exact locations of all BFEs to be changed.

Send comments to Kevin C. Long, Acting Chief, Engineering Management Branch, Mitigation Directorate, Federal Emergency Management Agency, 500 C Street, SW., Washington, DC 20472.

ADDRESSES

Unincorporated Areas of Perry County

Maps are available for inspection at 109–A East Gay Street, Somerset, OH 43783.

Village of Corning

Maps are available for inspection at 115 South Corning Avenue, Corning, OH 43730.

Village of Crooksville

Maps are available for inspection at 98 South Buckeye Street, Crooksville, OH 43731.

Village of Hemlock

Maps are available for inspection at 8810 Main Street Southeast, Hemlock, OH 43730.

Sandusky County, Ohio, and Incorporated Areas

Flag Run	Approximately 0.4 mile downstream of North Broadway Street.	None	+669	Unincorporated Areas of Sandusky County, Village of Green Springs.
	Approximately 1,700 feet downstream of North Broadway Street.	None	+670	
Portage River	Approximately 0.7 mile downstream of railroad	None	+625	Unincorporated Areas of Sandusky County.
	Approximately 1,800 feet downstream of railroad	None	+626	
	Approximately 1,300 feet upstream of South Cherry Street.	None	+631	
	Approximately 0.5 mile upstream of South Cherry Street.	None	+632	
Sandusky River	Approximately 1,800 feet upstream of U.S. Route 20	None	+586	City of Fremont.

Flooding source(s)	Location of referenced elevation**	* Elevation in feet (NGVD) + Elevation in feet (NAVD) # Depth in feet above ground ∧ Elevation in meters (MSL)		Communities affected
		Effective	Modified	
Victoria Creek	Approximately 0.4 mile downstream of Tiffin Road	None	+596	Village of Woodville.
	Approximately 200 feet upstream of Fort Findlay Road.	+630	+629	
	Approximately 100 feet downstream of Grand Avenue	+630	+629	

* National Geodetic Vertical Datum.
+ North American Vertical Datum.
# Depth in feet above ground.
∧ Mean Sea Level, rounded to the nearest 0.1 meter.
** BFEs to be changed include the listed downstream and upstream BFEs, and include BFEs located on the stream reach between the referenced locations above. Please refer to the revised Flood Insurance Rate Map located at the community map repository (see below) for exact locations of all BFEs to be changed.

Send comments to Kevin C. Long, Acting Chief, Engineering Management Branch, Mitigation Directorate, Federal Emergency Management Agency, 500 C Street, SW., Washington, DC 20472.

ADDRESSES

City of Fremont
Maps are available for inspection at 323 South Front Street, Fremont, OH 43420.

Unincorporated Areas of Sandusky County
Maps are available for inspection at 606 West State Street, Fremont, OH 43420.

Village of Green Springs
Maps are available for inspection at 120 Catherine Street, Green Springs, OH 44836.

Village of Woodville
Maps are available for inspection at 219 West Main Street, Woodville, OH 43469.

Scioto County, Ohio, and Incorporated Areas

Bonser Run (Backwater effects from Ohio River).	Approximately 1,240 feet upstream of Milldale Road	None	+538	Unincorporated Areas of Scioto County.
	Approximately 620 feet upstream of Elliot Hill Road	None	+538	
Candy Run (Backwater effects from Scioto River).	Confluence with the Scioto River	None	+535	Unincorporated Areas of Scioto County.
	Approximately 0.5 mile upstream of Huston Hollow-Long Run Road.	None	+535	
Duck Run (Backwater effects from Scioto River).	Approximately 547 feet upstream of Duck Run-Otway Road.	None	+535	Unincorporated Areas of Scioto County.
	Just downstream of McDermott Pond Creek Road	None	+535	
Lick Run (Backwater effects from Ohio River).	Approximately 0.5 mile upstream of State Route 522	None	+538	Unincorporated Areas of Scioto County.
	Confluence with Pine Creek	None	+538	
Little Scioto River (Backwater effects from Ohio River).	Approximately 4.6 miles upstream of Dixon Mill Road	None	+538	Unincorporated Areas of Scioto County.
	Approximately 447 feet upstream of Slocum Avenue	None	+538	
Little Scioto River Tributary 3 (Backwater effects from Ohio River).	Confluence with the Little Scioto River	None	+538	Unincorporated Areas of Scioto County.
	Approximately 680 feet upstream of Chesapeake-Ohio Railway.	None	+538	
Munn Run	Just upstream of U.S. 52 Westbound (Gallia Street)	None	+536	City of Portsmouth, Village of New Boston.
	Approximately 860 feet upstream of Valley Street	None	+551	
Oven Lick Run (Backwater effects from Ohio River).	Approximately 0.4 mile upstream of State Route 140	None	+538	Unincorporated Areas of Scioto County.
	Confluence with Wards Run	None	+538	
Scioto Brush Creek (Backwater effects from Scioto River).	Approximately 840 feet downstream of McDermott Pond Creek Road.	None	+535	Unincorporated Areas of Scioto County.
	Approximately 0.5 mile downstream of State Route 104.	None	+535	
Swaugar Valley Run (Backwater effects from Ohio River).	Approximately 1,250 feet downstream of Elliot Hill Road.	None	+538	Unincorporated Areas of Scioto County.
	Approximately 1,200 feet upstream of Elliot Hill Road	None	+538	
Swaugar Valley Run Tributary 1 (Backwater effects from Ohio River).	Confluence with Swaugar Valley Run	None	+538	Unincorporated Areas of Scioto County.

Flooding source(s)	Location of referenced elevation**	* Elevation in feet (NGVD) + Elevation in feet (NAVD) # Depth in feet above ground ∧ Elevation in meters (MSL)		Communities affected
		Effective	Modified	
Wards Run (Backwater effects from Ohio River).	Approximately 600 feet upstream of Swaugar Valley Road.	None	+538	Unincorporated Areas of Scioto County.
	Confluence with the Little Scioto River	None	+538	
	Approximately 0.7 mile upstream of State Route 140	None	+538	

* National Geodetic Vertical Datum.
+ North American Vertical Datum.
# Depth in feet above ground.
∧ Mean Sea Level, rounded to the nearest 0.1 meter.
** BFEs to be changed include the listed downstream and upstream BFEs, and include BFEs located on the stream reach between the referenced locations above. Please refer to the revised Flood Insurance Rate Map located at the community map repository (see below) for exact locations of all BFEs to be changed.

Send comments to Kevin C. Long, Acting Chief, Engineering Management Branch, Mitigation Directorate, Federal Emergency Management Agency, 500 C Street, SW., Washington, DC 20472.

ADDRESSES

City of Portsmouth
Maps are available for inspection at 728 2nd Street, Portsmouth, OH 45662.

Unincorporated Areas of Scioto County
Maps are available for inspection at 617 Court Street, Portsmouth, OH 45662.

Village of New Boston
Maps are available for inspection at 3980 Rhodes Avenue, New Boston, OH 45662.

Seneca County, Ohio, and Incorporated Areas

Morrison Creek (Backwater from Sandusky River).	At the confluence with the Sandusky River	None	+717	Unincorporated Areas of Seneca County.
	Approximately 700 feet upstream of the confluence with the Sandusky River.	None	+717	
Sandusky River	Approximately 1.0 mile downstream of Huss Street	None	+709	City of Tiffin, Unincorporated Areas of Seneca County.
	Approximately 1,600 feet downstream of U.S. Route 224.	None	+745	

* National Geodetic Vertical Datum.
+ North American Vertical Datum.
# Depth in feet above ground.
∧ Mean Sea Level, rounded to the nearest 0.1 meter.
** BFEs to be changed include the listed downstream and upstream BFEs, and include BFEs located on the stream reach between the referenced locations above. Please refer to the revised Flood Insurance Rate Map located at the community map repository (see below) for exact locations of all BFEs to be changed.

Send comments to Kevin C. Long, Acting Chief, Engineering Management Branch, Mitigation Directorate, Federal Emergency Management Agency, 500 C Street, SW., Washington, DC 20472.

ADDRESSES

City of Tiffin
Maps are available for inspection at 51 East Market Street, Tiffin, OH 44883.

Unincorporated Areas of Seneca County
Maps are available for inspection at 109 South Washington Street, Suite 2002, Tiffin, OH 44883.

Grady County, Oklahoma, and Incorporated Areas

Congo Creek	At the confluence with Washita River	+1,077	+1,078	City of Chickasha, Unincorporated Areas of Grady County.
	Just upstream of Grand Avenue	+1,115	+1,117	
Line Creek	At the confluence with Washita River	None	+1,085	City of Chickasha, Unincorporated Areas of Grady County.
	Just downstream of Highway 62	+1,097	+1,099	
Line Creek Split	Just upstream of Burlington Northern Railroad	None	+1,093	City of Chickasha, Unincorporated Areas of Grady County.
	At the confluence with Line Creek	None	+1,099	

Flooding source(s)	Location of referenced elevation**	* Elevation in feet (NGVD) + Elevation in feet (NAVD) # Depth in feet above ground ∧ Elevation in meters (MSL)		Communities affected
		Effective	Modified	
Washita River	Approximately 1.98 mile downstream of confluence with Congo River.	None	+1,078	City of Chickasha, Unincorporated Areas of Grady County.
	Approximately 0.81 mile upstream of N2840	None	+1,095	

* National Geodetic Vertical Datum.
+ North American Vertical Datum.
# Depth in feet above ground.
∧ Mean Sea Level, rounded to the nearest 0.1 meter.
** BFEs to be changed include the listed downstream and upstream BFEs, and include BFEs located on the stream reach between the referenced locations above. Please refer to the revised Flood Insurance Rate Map located at the community map repository (see below) for exact locations of all BFEs to be changed.

Send comments to Kevin C. Long, Acting Chief, Engineering Management Branch, Mitigation Directorate, Federal Emergency Management Agency, 500 C Street, SW., Washington, DC 20472.

ADDRESSES

City of Chickasha

Maps are available for inspection at City Hall, 101 North 6th Street, Chickasha, OK 73018.

Unincorporated Areas of Grady County

Maps are available for inspection at the Grady County Floodplain Management Board, 315 West Pennsylvania Avenue, Chickasha, OK 73092.

Jackson County, Oregon, and Incorporated Areas

Daisy Creek	At the confluence with Griffin Creek	None	+1,274	Unincorporated Areas of Jackson County, City of Central Point.
	Just upstream of Beall Lane	None	+1,299	
Elk Creek	At the confluence with Bear Creek	None	+1,271	Unincorporated Areas of Jackson County, City of Central Point.
	Just upstream of Beall Lane	None	+1,297	
Griffin Creek	At the confluence with Bear Creek	None	+1,214	Unincorporated Areas of Jackson County, City of Central Point.
	Just downstream of Taylor Road	+1,265	+1,267	
	Just upstream of Beall Lane	*1,297	+1,301	
Horn Creek	At the confluence with Jackson Creek	None	+1,264	Unincorporated Areas of Jackson County, City of Central Point.
	Just downstream of Mendolia Way	None	+1,281	
	Just upstream of Grant Road	None	+1,290	
Jackson Creek	Just downstream of Scenic Avenue	None	+1,235	Unincorporated Areas of Jackson County, City of Central Point.
	Just downstream of Taylor Road	None	+1,266	
	Just upstream of Beall Lane	None	+1,301	
Jackson Creek Overbank	At the confluence with Jackson Creek	None	+1,238	Unincorporated Areas of Jackson County, City of Central Point.
	At the divergence from Griffin Creek	None	+1,258	
Mingus Creek	Just downstream of Pine Street	None	+1,261	Unincorporated Areas of Jackson County, City of Central Point.
	Just upstream of Highway 99	None	+1,295	
Rouge River	Approximately 500 feet upstream of Savage Rapids Dam.	+978	+975	Unincorporated Areas of Jackson County.
	Approximately 1.02 mile upstream of the confluence with Little Savage Creek.	+992	+987	

* National Geodetic Vertical Datum.
+ North American Vertical Datum.
# Depth in feet above ground.
∧ Mean Sea Level, rounded to the nearest 0.1 meter.
** BFEs to be changed include the listed downstream and upstream BFEs, and include BFEs located on the stream reach between the referenced locations above. Please refer to the revised Flood Insurance Rate Map located at the community map repository (see below) for exact locations of all BFEs to be changed.

Flooding source(s)	Location of referenced elevation **	* Elevation in feet (NGVD) + Elevation in feet (NAVD) # Depth in feet above ground ∧ Elevation in meters (MSL)		Communities affected
		Effective	Modified	

Send comments to Kevin C. Long, Acting Chief, Engineering Management Branch, Mitigation Directorate, Federal Emergency Management Agency, 500 C Street, SW., Washington, DC 20472.

ADDRESSES

City of Central Point

Maps are available for inspection at City Hall, 140 South 3rd Street, Central Point, OR 97502.

Unincorporated Areas of Jackson County

Maps are available for inspection at City Hall, 10 South Oakdale, Room 200, Medford, OR 97501.

Abbeville County, South Carolina, and Incorporated Areas

Blue Hill Creek	Approximately 1,546 feet downstream of South Main Street.	+468	+462	City of Abbeville.
	Approximately 1,484 feet upstream of Vienna Street	+500	+501	
Blue Hill Creek Tributary	Approximately 315 feet upstream of the confluence with Blue Hill Creek.	+493	+494	City of Abbeville.
	Approximately 100 feet upstream of Haigler Street Extended.	+556	+559	

* National Geodetic Vertical Datum.
+ North American Vertical Datum.
# Depth in feet above ground.
∧ Mean Sea Level, rounded to the nearest 0.1 meter.
** BFEs to be changed include the listed downstream and upstream BFEs, and include BFEs located on the stream reach between the referenced locations above. Please refer to the revised Flood Insurance Rate Map located at the community map repository (see below) for exact locations of all BFEs to be changed.

Send comments to Kevin C. Long, Acting Chief, Engineering Management Branch, Mitigation Directorate, Federal Emergency Management Agency, 500 C Street, SW., Washington, DC 20472.

ADDRESSES

City of Abbeville

Maps are available for inspection at the Fire Department, 102 South Main Street, Abbeville, SC 29620.

Edgefield County, South Carolina, and Incorporated Areas

Stevens Creek	Approximately 200 feet downstream of Woodland Road.	None	+191	Unincorporated Areas of Edgefield County.
	At the confluence with the Savannah River	None	+191	

* National Geodetic Vertical Datum.
+ North American Vertical Datum.
# Depth in feet above ground.
∧ Mean Sea Level, rounded to the nearest 0.1 meter.
** BFEs to be changed include the listed downstream and upstream BFEs, and include BFEs located on the stream reach between the referenced locations above. Please refer to the revised Flood Insurance Rate Map located at the community map repository (see below) for exact locations of all BFEs to be changed.

Send comments to Kevin C. Long, Acting Chief, Engineering Management Branch, Mitigation Directorate, Federal Emergency Management Agency, 500 C Street, SW., Washington, DC 20472.

ADDRESSES

Unincorporated Areas of Edgefield County

Maps are available for inspection at the County Courthouse, 124 Courthouse Square, Edgefield, SC 29824.

Brazos County, Texas, and Incorporated Areas

Bee Creek Tributary B	Approximately 1,700 feet downstream of Christine Lane.	None	+286	City of College Station.
	Just downstream of Southwest Parkway	None	+292	
Lick Creek	Approximately 1,000 feet downstream of Mission Hills Drive.	+219	+216	City of College Station.
	Approximately 1.0 mile upstream of William D. Fitch Parkway.	None	+253	
South Fork of Turkey Creek	At the confluence with Turkey Creek	None	+262	City of Bryan.
	Approximately 650 feet downstream of Farm-to-Market 2818.	None	+282	
Turkey Creek	Approximately 2 miles downstream from Jones Road	None	+226	City of Bryan, Unincorporated Areas of Brazos County.

Flooding source(s)	Location of referenced elevation**	* Elevation in feet (NGVD) + Elevation in feet (NAVD) # Depth in feet above ground ∧ Elevation in meters (MSL)		Communities affected
		Effective	Modified	
	Just downstream of Farm-to-Market 1688	None	+333	
Turkey Creek Tributary B	At the confluence with Turkey Creek	None	+250	City of Bryan.
	Approximately 0.6 mile upstream of the confluence with Turkey Creek Tributary B1.	None	+292	
Turkey Creek Tributary B1	At the confluence with Turkey Creek Tributary B	None	+268	City of Bryan.
	Approximately 0.5 mile upstream of the confluence with Turkey Creek Tributary B.	None	+290	
Turkey Creek Tributary C	At the confluence with Turkey Creek	None	+240	City of Bryan.
	Approximately 0.5 mile upstream of Villa Maria Road	None	+260	
Turkey Creek Tributary D	At the confluence with Turkey Creek	None	+239	City of Bryan.
	Just downstream of Traditions Drive	None	+273	
Turkey Creek Tributary D1	At the confluence with Turkey Creek Tributary D	None	+252	City of Bryan.
	Approximately 1,950 feet upstream of the confluence with Turkey Creek Tributary D.	None	+276	
Unnamed Tributary to Bee Creek Tributary B.	At the confluence with Bee Creek Tributary B	None	+291	City of College Station.
	Approximately 613 feet upstream of the confluence with Bee Creek Tributary B.	None	+293	
Unnamed Tributary to White Creek.	Approximately 573 feet upstream of the confluence with Unnamed Tributary to White Creek Tributary 3.	None	+277	City of College Station.
	Approximately 1,800 feet downstream of the confluence with White Creek Tributary 1.	None	+302	
Unnamed Tributary to White Creek Tributary 1.	At the confluence with Unnamed Tributary to White Creek.	None	+289	City of College Station.
	Approximately 1,180 feet upstream of the confluence with Unnamed Tributary to White Creek.	None	+300	
Unnamed Tributary to White Creek Tributary 2.	At the confluence with Unnamed Tributary to White Creek.	None	+295	City of College Station.
	Approximately 600 feet upstream of Farm-to-Market 2818.	None	+308	
Unnamed Tributary to White Creek Tributary 3.	At the confluence with Unnamed Tributary to White Creek.	None	+300	City of College Station.
	Approximately 280 feet upstream of the confluence with Unnamed Tributary to White Creek.	None	+303	
Wickson Creek Tributary 23	At the confluence with Wickson Creek	None	+267	Unincorporated Areas of Brazos County.
	Approximately 284 feet downstream of Old Reliance Road.	None	+268	

* National Geodetic Vertical Datum.
+ North American Vertical Datum.
# Depth in feet above ground.
∧ Mean Sea Level, rounded to the nearest 0.1 meter.

** BFEs to be changed include the listed downstream and upstream BFEs, and include BFEs located on the stream reach between the referenced locations above. Please refer to the revised Flood Insurance Rate Map located at the community map repository (see below) for exact locations of all BFEs to be changed.

Send comments to Kevin C. Long, Acting Chief, Engineering Management Branch, Mitigation Directorate, Federal Emergency Management Agency, 500 C Street, SW., Washington, DC 20472.

ADDRESSES

City of Bryan

Maps are available for inspection at 300 South Texas Avenue, 1st Floor, Engineering Services Department, Bryan, TX 77803.

City of College Station

Maps are available for inspection at 1101 Texas Avenue, Development Engineering Division, College Station, TX 77842.

Unincorporated Areas of Brazos County

Maps are available for inspection at 2617 Highway 21 West, Brazos County Road and Bridge Department, Bryan, TX 77803.

Llano County, Texas, and Incorporated Areas

Colorado River	Just upstream of the confluence with Spring Branch Creek.	+831	+830	Unincorporated Areas of Llano County, City of Sunrise Beach Village.
	Approximately 1.2 mile upstream of County Highway 222.	+1,029	+1,025	
Dry Creek	At the confluence with the Llano River	+857	+858	Unincorporated Areas of Llano County.

Flooding source(s)	Location of referenced elevation **	* Elevation in feet (NGVD) + Elevation in feet (NAVD) # Depth in feet above ground ∧ Elevation in meters (MSL)		Communities affected
		Effective	Modified	
	Just downstream of County Highway 3404	None	+860	

* National Geodetic Vertical Datum.
+ North American Vertical Datum.
# Depth in feet above ground.
∧ Mean Sea Level, rounded to the nearest 0.1 meter.
** BFEs to be changed include the listed downstream and upstream BFEs, and include BFEs located on the stream reach between the referenced locations above. Please refer to the revised Flood Insurance Rate Map located at the community map repository (see below) for exact locations of all BFEs to be changed.

Send comments to Kevin C. Long, Acting Chief, Engineering Management Branch, Mitigation Directorate, Federal Emergency Management Agency, 500 C Street, SW., Washington, DC 20472.

ADDRESSES

City of Sunrise Beach Village
Maps are available for inspection at 124 Sunrise Drive, Sunrise Beach Village, TX 78643.

Unincorporated Areas of Llano County
Maps are available for inspection at 801 Ford Street, Llano, TX 78643.

Maverick County, Texas, and Incorporated Areas

Tributary to Seco Creek	Approximately 115 feet downstream of U.S. Highway 277.	+736	+737	City of Eagle Pass, Unincorporated Areas of Maverick County.
	Approximately 200 feet upstream of U.S. Highway 277.	+739	+740	
Unnamed Tributary of Rio Grande.	Approximately 200 feet upstream of Laura Street	+736	+737	Unincorporated Areas of Maverick County.
	Just downstream of Montemayor Street	None	+749	

* National Geodetic Vertical Datum.
+ North American Vertical Datum.
# Depth in feet above ground.
∧ Mean Sea Level, rounded to the nearest 0.1 meter.
** BFEs to be changed include the listed downstream and upstream BFEs, and include BFEs located on the stream reach between the referenced locations above. Please refer to the revised Flood Insurance Rate Map located at the community map repository (see below) for exact locations of all BFEs to be changed.

Send comments to Kevin C. Long, Acting Chief, Engineering Management Branch, Mitigation Directorate, Federal Emergency Management Agency, 500 C Street, SW., Washington, DC 20472.

ADDRESSES

City of Eagle Pass
Maps are available for inspection at 500 Quarry Street, Suite 3, Eagle Pass, TX 78852.

Unincorporated Areas of Maverick County
Maps are available for inspection at 100 South Monroe Street, Eagle Pass, TX 78852.

(Catalog of Federal Domestic Assistance No. 97.022, "Flood Insurance.")

Sandra K. Knight,

Deputy Assistant Administrator for Mitigation, Department of Homeland Security, Federal Emergency Management Agency.

[FR Doc. 2010–2478 Filed 2–4–10; 8:45 am]

BILLING CODE 9110–12–P

DEPARTMENT OF HOMELAND SECURITY

Federal Emergency Management Agency

44 CFR Part 67

[Docket ID FEMA–2010–0003; Internal Agency Docket No. FEMA–B–1091]

Proposed Flood Elevation Determinations

AGENCY: Federal Emergency Management Agency, DHS.

ACTION: Proposed rule.

SUMMARY: Comments are requested on the proposed Base (1% annual-chance) Flood Elevations (BFEs) and proposed BFE modifications for the communities listed in the table below. The purpose of this notice is to seek general information and comment regarding the proposed regulatory flood elevations for the reach described by the downstream and upstream locations in the table below. The BFEs and modified BFEs are a part of the floodplain management measures that the community is required either to adopt or show evidence of having in effect in order to qualify or remain qualified for participation in the National Flood Insurance Program (NFIP). In addition, these elevations, once finalized, will be used by insurance agents, and others to

calculate appropriate flood insurance premium rates for new buildings and the contents in those buildings.

DATES: Comments are to be submitted on or before May 6, 2010.

ADDRESSES: The corresponding preliminary Flood Insurance Rate Map (FIRM) for the proposed BFEs for each community is available for inspection at the community's map repository. The respective addresses are listed in the table below.

You may submit comments, identified by Docket No. FEMA–B–1091, to Kevin C. Long, Acting Chief, Engineering Management Branch, Mitigation Directorate, Federal Emergency Management Agency, 500 C Street, SW., Washington, DC 20472, (202) 646–2820, or (e-mail) *kevin.long@dhs.gov.*

FOR FURTHER INFORMATION CONTACT: Kevin C. Long, Acting Chief, Engineering Management Branch, Mitigation Directorate, Federal Emergency Management Agency, 500 C Street, SW., Washington, DC 20472, (202) 646–2820, or (e-mail) *kevin.long@dhs.gov.*

SUPPLEMENTARY INFORMATION: The Federal Emergency Management Agency (FEMA) proposes to make determinations of BFEs and modified BFEs for each community listed below, in accordance with section 110 of the Flood Disaster Protection Act of 1973, 42 U.S.C. 4104, and 44 CFR 67.4(a).

These proposed BFEs and modified BFEs, together with the floodplain management criteria required by 44 CFR 60.3, are the minimum that are required. They should not be construed to mean that the community must change any existing ordinances that are more stringent in their floodplain management requirements. The community may at any time enact stricter requirements of its own, or pursuant to policies established by other Federal, State, or regional entities. These proposed elevations are used to meet the floodplain management requirements of the NFIP and are also used to calculate the appropriate flood insurance premium rates for new buildings built after these elevations are made final, and for the contents in these buildings.

Comments on any aspect of the Flood Insurance Study and FIRM, other than the proposed BFEs, will be considered. A letter acknowledging receipt of any comments will not be sent.

National Environmental Policy Act. This proposed rule is categorically excluded from the requirements of 44 CFR part 10, Environmental Consideration. An environmental impact assessment has not been prepared.

Regulatory Flexibility Act. As flood elevation determinations are not within the scope of the Regulatory Flexibility Act, 5 U.S.C. 601–612, a regulatory flexibility analysis is not required.

Executive Order 12866, Regulatory Planning and Review. This proposed rule is not a significant regulatory action under the criteria of section 3(f) of Executive Order 12866, as amended.

Executive Order 13132, Federalism. This proposed rule involves no policies that have federalism implications under Executive Order 13132.

Executive Order 12988, Civil Justice Reform. This proposed rule meets the applicable standards of Executive Order 12988.

List of Subjects in 44 CFR Part 67

Administrative practice and procedure, Flood insurance, Reporting and recordkeeping requirements.

Accordingly, 44 CFR part 67 is proposed to be amended as follows:

PART 67—[AMENDED]

1. The authority citation for part 67 continues to read as follows:

Authority: 42 U.S.C. 4001 *et seq.;* Reorganization Plan No. 3 of 1978, 3 CFR, 1978 Comp., p. 329; E.O. 12127, 44 FR 19367, 3 CFR, 1979 Comp., p. 376.

§ 67.4 [Amended]

2. The tables published under the authority of § 67.4 are proposed to be amended as follows:

Flooding source(s)	Location of referenced elevation **	* Elevation in feet (NGVD) + Elevation in feet (NAVD) # Depth in feet above ground ∧ Elevation in meters (MSL)		Communities affected
		Effective	Modified	
Hot Spring County, Arkansas, and Incorporated Areas				
Chatman Creek	Approximately 900 feet downstream of Grigsby Ford Road.	None	+254	Unincorporated Areas of Hot Spring County.
	Just upstream of State Highway 9	None	+307	
Rockport Creek	Approximately 2,300 feet downstream of Martin Luther King Boulevard.	None	+260	Unincorporated Areas of Hot Spring County.
	Approximately 1,300 feet downstream of Martin Luther King Boulevard.	None	+263	
Town Creek	Approximately 2,300 feet downstream of Walco Road.	None	+253	Unincorporated Areas of Hot Spring County.
	Just downstream of Mount Willow Road	None	+298	

* National Geodetic Vertical Datum.

+ North American Vertical Datum.

Depth in feet above ground.

∧ Mean Sea Level, rounded to the nearest 0.1 meter.

** BFEs to be changed include the listed downstream and upstream BFEs, and include BFEs located on the stream reach between the referenced locations above. Please refer to the revised Flood Insurance Rate Map located at the community map repository (see below) for exact locations of all BFEs to be changed.

Send comments to Kevin C. Long, Acting Chief, Engineering Management Branch, Mitigation Directorate, Federal Emergency Management Agency, 500 C Street, SW., Washington, DC 20472.

Flooding source(s)	Location of referenced elevation **	* Elevation in feet (NGVD) + Elevation in feet (NAVD) # Depth in feet above ground ∧ Elevation in meters (MSL)		Communities affected
		Effective	Modified	
ADDRESSES				
Unincorporated Areas of Hot Spring County				
Maps are available for inspection at 210 Locust Street, Malvern, AR 72104.				
Logan County, Arkansas, and Incorporated Areas				
Arkansas River	Just upstream of State Highway 109	None	+351	Town of Morrison Bluff.
Booneville Creek	Approximately 0.75 mile upstream of confluence with Petit Jean River.	None	+443	City of Booneville.
Booneville Creek Tributary No. 1.	Just upstream of the City of Booneville/Logan County southeast boundary.	None	+446	City of Booneville.
Cane Creek	Flooding effects near 5th Street and the Tributary of Cane Creek.	None	+352	Town of Scranton.
	Flooding effects just southeast of 5th and Cherry Streets, near the Town of Scranton's southeast boundary.	None	+355	
Petit Jean River	Just upstream of the City of Booneville/Logan County southeast boundary.	None	+443	City of Booneville.
Short Mountain Creek Tributary.	Just upstream of confluence with Short Mountain Creek.	None	+375	Unincorporated Areas of Logan County.
	Just upstream of Cherry Street	None	+425	
	Approximately 1,800 feet upstream of Cherry Street	None	+432	

* National Geodetic Vertical Datum.
+ North American Vertical Datum.
# Depth in feet above ground.
∧ Mean Sea Level, rounded to the nearest 0.1 meter.
** BFEs to be changed include the listed downstream and upstream BFEs, and include BFEs located on the stream reach between the referenced locations above. Please refer to the revised Flood Insurance Rate Map located at the community map repository (see below) for exact locations of all BFEs to be changed.

Send comments to Kevin C. Long, Acting Chief, Engineering Management Branch, Mitigation Directorate, Federal Emergency Management Agency, 500 C Street, SW., Washington, DC 20472.

ADDRESSES

City of Booneville
Maps are available for inspection at 497 East Main Street, Suite A, Booneville, AR 72927.

Town of Morrison Bluff
Maps are available for inspection at 22189 North Highway 109, Scranton, AR 72863.

Town of Scranton
Maps are available for inspection at 203 Park Avenue, Scranton, AR 72863.

Unincorporated Areas of Logan County
Maps are available for inspection at the OEM Training Center, 205 East Maple Street, Paris, AR 72855.

St. James Parish, Louisiana, and Incorporated Areas				
Mississippi River	Approximately 0.9 mile downstream of State Highway 3213.	None	+27	Unincorporated Areas of St. James Parish, Town of Gramercy, Town of Lutcher.
	Approximately 1.2 mile upstream of State Highway 3213.	None	+28	
Storage Areas from the Gulf (D2G model).	Approximately 1,079 feet south of State Highway 643.	None	+1	Unincorporated Areas of St. James Parish.
	Approximately 60 feet south of the intersection of Sidney Road and Missouri Pacific Railroad, along the east side of the rail line.	None	+14	

* National Geodetic Vertical Datum.
+ North American Vertical Datum.
# Depth in feet above ground.
∧ Mean Sea Level, rounded to the nearest 0.1 meter.
** BFEs to be changed include the listed downstream and upstream BFEs, and include BFEs located on the stream reach between the referenced locations above. Please refer to the revised Flood Insurance Rate Map located at the community map repository (see below) for exact locations of all BFEs to be changed.

Send comments to Kevin C. Long, Acting Chief, Engineering Management Branch, Mitigation Directorate, Federal Emergency Management Agency, 500 C Street, SW., Washington, DC 20472.

Flooding source(s)	Location of referenced elevation **	* Elevation in feet (NGVD) + Elevation in feet (NAVD) # Depth in feet above ground ∧ Elevation in meters (MSL)		Communities affected
		Effective	Modified	

ADDRESSES

Town of Gramercy
Maps are available for inspection at 120 North Montz Avenue, Gramercy, LA 70052.

Town of Lutcher
Maps are available for inspection at 2500 Louisiana Avenue, Lutcher, LA 70071.

Unincorporated Areas of St. James Parish
Maps are available for inspection at 5800 Highway 44, Convent, LA 70723.

Caddo County, Oklahoma, and Incorporated Areas

Deer Creek East Tributary ..	Approximately 250 feet upstream of N2480 Road ...	+1,486	+1,484	Unincorporated Areas of Caddo County.
	Approximately 1,700 feet upstream of N2480 Road	+1,501	+1,503	

* National Geodetic Vertical Datum.
+ North American Vertical Datum.
# Depth in feet above ground.
∧ Mean Sea Level, rounded to the nearest 0.1 meter.
** BFEs to be changed include the listed downstream and upstream BFEs, and include BFEs located on the stream reach between the referenced locations above. Please refer to the revised Flood Insurance Rate Map located at the community map repository (see below) for exact locations of all BFEs to be changed.

Send comments to Kevin C. Long, Acting Chief, Engineering Management Branch, Mitigation Directorate, Federal Emergency Management Agency, 500 C Street, SW., Washington, DC 20472.

ADDRESSES

Unincorporated Areas of Caddo County
Maps are available for inspection at the County Courthouse, 201 West Oklahoma Avenue, Room 11, Anadarko, OK 73005.

Hopkins County, Texas, and Incorporated Areas

Coleman Creek	Approximately 0.56 mile upstream of State Highway 19.	None	+437	Unincorporated Areas of Hopkins County.
	Approximately 600 feet upstream of State Highway 19.	None	+445	
Gena Creek	Just upstream of FM Road 1870	None	+440	Unincorporated Areas of Hopkins County.
	Approximately 1.04 mile upstream of FM Road 1870.	None	+457	
Rock Creek	Just downstream of unnamed railroad	None	+421	Unincorporated Areas of Hopkins County.
	Approximately 500 feet upstream of Holiday Drive	None	+476	
Turtle Creek	Just upstream of State Highway 11	None	+481	Unincorporated Areas of Hopkins County.
	Just upstream of unnamed railroad	None	+494	

* National Geodetic Vertical Datum.
+ North American Vertical Datum.
# Depth in feet above ground.
∧ Mean Sea Level, rounded to the nearest 0.1 meter.
** BFEs to be changed include the listed downstream and upstream BFEs, and include BFEs located on the stream reach between the referenced locations above. Please refer to the revised Flood Insurance Rate Map located at the community map repository (see below) for exact locations of all BFEs to be changed.

Send comments to Kevin C. Long, Acting Chief, Engineering Management Branch, Mitigation Directorate, Federal Emergency Management Agency, 500 C Street, SW., Washington, DC 20472.

ADDRESSES

Unincorporated Areas of Hopkins County
Maps are available for inspection at the County Courthouse, 118 Church Street, Sulphur Springs, TX 75483.

Robertson County, Texas, and Incorporated Areas

Little Brazos River	At the confluence with Lost Creek	None	+268	Unincorporated Areas of Robertson County.
	Just downstream of Gifford Hill Road	None	+276	
Lost Creek	At the confluence with the Little Brazos River	None	+268	Unincorporated Areas of Robertson County.
	Just downstream of Union Pacific Railroad	None	+272	

Flooding source(s)	Location of referenced elevation **	* Elevation in feet (NGVD) + Elevation in feet (NAVD) # Depth in feet above ground ∧ Elevation in meters (MSL)		Communities affected
		Effective	Modified	
	Approximately 1,900 feet downstream of Black Jack Road.	None	+305	
	Approximately 800 feet upstream of Old Henry Prairie Road.	None	+338	
Sandy Creek	At the confluence with the Little Brazos River	None	+274	Unincorporated Areas of Robertson County.
	Just downstream of Vaughn Lane	None	+287	
	Just upstream of the Union Pacific Railroad	None	+302	
	Approximately 1,970 feet upstream of the confluence with Sandy Creek Tributary 3.	None	+320	
Sandy Creek Tributary 2	At the confluence with Sandy Creek	None	+312	Unincorporated Areas of Robertson County.
	Approximately 1,400 feet upstream of the confluence with Sandy Creek.	None	+314	

* National Geodetic Vertical Datum.
+ North American Vertical Datum.
# Depth in feet above ground.
∧ Mean Sea Level, rounded to the nearest 0.1 meter.
** BFEs to be changed include the listed downstream and upstream BFEs, and include BFEs located on the stream reach between the referenced locations above. Please refer to the revised Flood Insurance Rate Map located at the community map repository (see below) for exact locations of all BFEs to be changed.

Send comments to Kevin C. Long, Acting Chief, Engineering Management Branch, Mitigation Directorate, Federal Emergency Management Agency, 500 C Street, SW., Washington, DC 20472.

ADDRESSES

Unincorporated Areas of Robertson County

Maps are available for inspection at P.O. Box 427, Franklin, TX 77856.

(Catalog of Federal Domestic Assistance No. 97.022, "Flood Insurance.")

Sandra K. Knight,

Deputy Assistant Administrator for Mitigation, Department of Homeland Security, Federal Emergency Management Agency.

[FR Doc. 2010–2493 Filed 2–4–10; 8:45 am]

BILLING CODE 9110–12–P

DEPARTMENT OF HOMELAND SECURITY

Federal Emergency Management Agency

44 CFR Part 67

[Docket ID FEMA–2010–0003; Internal Agency Docket No. FEMA–B–1066]

Proposed Flood Elevation Determinations

AGENCY: Federal Emergency Management Agency, DHS.

ACTION: Proposed rule; correction.

SUMMARY: FEMA is correcting a table for Carroll County, Arkansas, and Incorporated Areas.

FOR FURTHER INFORMATION CONTACT: Kevin C. Long, Acting Chief, Engineering Management Branch, Mitigation Directorate, Federal Emergency Management Agency, 500 C Street, SW., Washington, DC 20472, (202) 646–2820 or (e-mail) *kevin.long@dhs.gov.*

SUPPLEMENTARY INFORMATION: The Federal Emergency Management Agency (FEMA) proposes determinations of Base (1% annual-chance) Flood Elevations (BFEs) and modified BFEs for communities participating in the National Flood Insurance Program (NFIP), in accordance with section 110 of the Flood Disaster Protection Act of 1973, 42 U.S.C. 4104, and 44 CFR 67.4(a). These proposed BFEs and modified BFEs, together with the floodplain management criteria required by 44 CFR 60.3, are minimum requirements. They should not be construed to mean that the community must change any existing ordinances that are more stringent in their floodplain management requirements. The community may at any time enact stricter requirements of its own, or pursuant to policies established by other Federal, State, or regional entities. These proposed elevations are used to meet the floodplain management requirements of the NFIP and are also used to calculate the appropriate flood insurance premium rates for new buildings built after these elevations are made final, and for the contents in these buildings.

Correction

FEMA is correcting a table in a proposed rule which published on September 8, 2009, at 74 FR 46047. The table for Carroll County, Arkansas, and Incorporated Areas contained incorrect information for the flooding source "Leatherwood Creek."

The September 8, 2009, proposed rule contained a table entitled "Carroll County, Arkansas, and Incorporated Areas," which contained errors. For flooding source "Leatherwood Creek," the table contained inaccurate information as to the communities affected. FEMA is now publishing a revised table for Carroll County, Arkansas, and Incorporated Areas, containing the accurate information, to address these prior errors. The information provided in the table below should be used in lieu of the table published on September 8, 2009.

Flooding source(s)	Location of referenced elevation **	* Elevation in feet (NGVD) + Elevation in feet (NAVD) # Depth in feet above ground ∧ Elevation in meters (MSL)		Communities affected
		Effective	Modified	
Carroll County, Arkansas, and Incorporated Areas				
Leatherwood Creek	Approximately 0.61 miles upstream of Magnetic Road	None	+1,109	City of Eureka Springs, Unincorporated Areas of Carroll County.
	Approximately 1,250 feet upstream of Magnetic Road	None	+1,131	

* National Geodetic Vertical Datum.
+ North American Vertical Datum.
# Depth in feet above ground.
∧ Mean Sea Level, rounded to the nearest 0.1 meter.
** BFEs to be changed include the listed downstream and upstream BFEs, and include BFEs located on the stream reach between the referenced locations above. Please refer to the revised Flood Insurance Rate Map located at the community map repository (see below) for exact locations of all BFEs to be changed.
Send comments to Kevin C. Long, Acting Chief, Engineering Management Branch, Mitigation Directorate, Federal Emergency Management Agency, 500 C Street, SW., Washington, DC 20472.

ADDRESSES

City of Eureka Springs
Maps are available for inspection at City Hall, 44 South Main Street, Eureka Springs, AR 72632.

Unincorporated Areas of Carroll County
Maps are available for inspection at the County Courthouse, 210 West Church Street, Berryville, AR 72616.

(Catalog of Federal Domestic Assistance No. 97.022, "Flood Insurance.")

Sandra K. Knight,
Deputy Assistant Administrator for Mitigation, Department of Homeland Security Federal Emergency Management Agency.

[FR Doc. 2010–2490 Filed 2–4–10; 8:45 am]
BILLING CODE 9110–12–P

DEPARTMENT OF HOMELAND SECURITY

Federal Emergency Management Agency

44 CFR Part 67

[Docket ID FEMA–2010–0003; [Internal Agency Docket No. FEMA–B–1053]

Proposed Flood Elevation Determinations

AGENCY: Federal Emergency Management Agency, DHS.

ACTION: Proposed rule; correction.

SUMMARY: FEMA is correcting a table for Ransom County, North Dakota, and Incorporated Areas.

FOR FURTHER INFORMATION CONTACT: Kevin C. Long, Acting Chief, Engineering Management Branch, Mitigation Directorate, Federal Emergency Management Agency, 500 C Street, SW., Washington, DC 20472, (202) 646–2820 or (e-mail) *kevin.long@dhs.gov.*

SUPPLEMENTARY INFORMATION: The Federal Emergency Management Agency (FEMA) proposes determinations of Base (1% annual-chance) Flood Elevations (BFEs) and modified BFEs for communities participating in the National Flood Insurance Program (NFIP), in accordance with section 110 of the Flood Disaster Protection Act of 1973, 42 U.S.C. 4104, and 44 CFR 67.4(a). These proposed BFEs and modified BFEs, together with the floodplain management criteria required by 44 CFR 60.3, are minimum requirements. They should not be construed to mean that the community must change any existing ordinances that are more stringent in their floodplain management requirements. The community may at any time enact stricter requirements of its own, or pursuant to policies established by other Federal, State, or regional entities. These proposed elevations are used to meet the floodplain management requirements of the NFIP and are also used to calculate the appropriate flood insurance premium rates for new buildings built after these elevations are made final, and for the contents in these buildings.

Correction

FEMA is correcting a table in a proposed rule which published on May 26, 2009, at 74 FR 24729. The table for Ransom County, North Dakota, and Incorporated Areas contained incorrect information for the flooding source "Sheyenne River."

The May 26, 2009, proposed rule contained a table entitled "Ransom County, North Dakota, and Incorporated Areas," which contained errors. For flooding source "Sheyenne River," the table contained inaccurate information as to the communities affected. FEMA is now publishing a revised table for Ransom County, North Dakota, and Incorporated Areas, containing the accurate information, to address these prior errors. The information provided in the table below should be used in lieu of the table published on May 26, 2009.

Flooding source(s)	Location of referenced elevation **	* Elevation in feet (NGVD) + Elevation in feet (NAVD) # Depth in feet above ground ∧ Elevation in meters (MSL)		Communities affected
		Effective	Modified	
Ransom County, North Dakota, and Incorporated Areas				
Sheyenne River	Approximately 1,064 feet upstream of Richland County boundary.	None	+990	City of Fort Ransom, City of Lisbon, Unincorporated Areas of Ransom County.
	Approximately 7,465 feet downstream of State Highway 46.	None	+1,160	

* National Geodetic Vertical Datum.
# Depth in feet above ground.
+ North American Vertical Datum.
∧ Mean Sea Level, rounded to the nearest 0.1 meter.
** BFEs to be changed include the listed downstream and upstream BFEs, and include BFEs located on the stream reach between the referenced locations above. Please refer to the revised Flood Insurance Rate Map located at the community map repository (see below) for exact locations of all BFEs to be changed.

Send comments to Kevin C. Long, Acting Chief, Engineering Management Branch, Mitigation Directorate, Federal Emergency Management Agency, 500 C Street, SW., Washington, DC 20472.

ADDRESSES

City of Fort Ransom
Maps are available for inspection at P.O. Box 17, Fort Ransom, ND 58033.

City of Lisbon
Maps are available for inspection at P.O. Box 1079, Lisbon, ND 58054.

Unincorporated Areas of Ransom County
Maps are available for inspection at 204 5th Avenue West, Lisbon, ND 58054–4115.

(Catalog of Federal Domestic Assistance No. 97.022, "Flood Insurance.")

Sandra K. Knight,
Deputy Assistant Administrator for Mitigation, Department of Homeland Security, Federal Emergency Management Agency.

[FR Doc. 2010–2491 Filed 2–4–10; 8:45 am]

BILLING CODE 9110–12–P

DEPARTMENT OF TRANSPORTATION

National Highway Traffic Safety Administration

49 CFR Part 572

[Docket No. NHTSA–2009–0194]

RIN 2127–AK64

Anthropomorphic Test Devices; Hybrid III Test Dummy, ES–2re Side Impact Crash Test Dummy

AGENCY: National Highway Traffic Safety Administration (NHTSA), Department of Transportation.

ACTION: Notice of proposed rulemaking (NPRM).

SUMMARY: This document proposes corrections or minor changes to some of the drawings incorporated by reference by a final rule, published on June 16, 2008, that responded to petitions for reconsideration of a December 2006 final rule that had adopted specifications and qualification requirements for a new crash test dummy called the "ES–2re" test dummy. The ES–2re is a 50th percentile adult male side impact crash test dummy that will be used in an upgraded Federal motor vehicle safety standard on side impact protection and in the agency's New Car Assessment Program. This NPRM responds to requests from test dummy manufacturers First Technology Safety Systems (FTSS) and Denton ATD (Denton) to correct or make minor adjustments to the drawings of the ES–2re. This NPRM would also correct dimensional errors in Figure 22 of 49 CFR part 572, subpart E, which depicts the pendulum used in the neck qualification tests of several of the crash test dummies, including the Hybrid III and ES–2re test dummies.

DATES: You should submit your comments early enough to ensure that they are received not later than April 6, 2010.

ADDRESSES: You may submit comments (identified by the Docket ID Number above) by any of the following methods:

- *Federal eRulemaking Portal:* Go to *http://www.regulations.gov.* Follow the online instructions for submitting comments.
- *Mail:* Docket Management Facility: U.S. Department of Transportation, 1200 New Jersey Avenue, SE., West Building Ground Floor, Room W12–140, Washington, DC 20590–0001.
- *Hand Delivery or Courier:* West Building Ground Floor, Room W12–140, 1200 New Jersey Avenue, SE., between 9 a.m. and 5 p.m. ET, Monday through Friday, except Federal holidays.
- *Fax:* 202–493–2251.

Instructions: For detailed instructions on submitting comments and additional information on the rulemaking process, see the Public Participation heading of the **SUPPLEMENTARY INFORMATION** section of this document. Note that all comments received will be posted without change to *http://www.regulations.gov*, including any personal information provided. Please see the Privacy Act heading below.

Privacy Act: Anyone is able to search the electronic form of all comments received into any of our dockets by the name of the individual submitting the comment (or signing the comment, if submitted on behalf of an association, business, labor union, *etc.*). You may review DOT's complete Privacy Act

Statement in the **Federal Register** published on April 11, 2000 (65 FR 19477–78).

Docket: For access to the docket to read background documents or comments received, go to *http://www.regulations.gov* or the street address listed above. Follow the online instructions for accessing the dockets.

FOR FURTHER INFORMATION CONTACT: For non-legal issues, you may call Mr. Peter Martin, NHTSA Office of Crashworthiness Standards (telephone 202–366–5668) (fax 202–493–2990). For legal issues, you may call Ms. Deirdre Fujita, NHTSA Office of Chief Counsel (telephone 202–366–2992) (fax 202–366–3820). You may send mail to these officials at the National Highway Traffic Safety Administration, 1200 New Jersey Avenue, SE., Washington, DC 20590.

SUPPLEMENTARY INFORMATION:

I. Background

NHTSA published a final rule on June 16, 2008 (73 FR 33903, Docket No. NHTSA–08–0111) that responded to various petitions for reconsideration of its previous rule [1] incorporating a new mid-size adult male crash test dummy, called the "ES–2re" test dummy, into 49 CFR part 572. The ES–2re will be used in an upgraded Federal Motor Vehicle Safety Standard No. 214, "Side impact protection," and in the agency's New Car Assessment Program beginning with vehicle model year 2010. The June 16, 2008 final rule incorporated by reference a drawing package, parts list, and user's manual, all dated February 2008.

After publication of the June 16, 2008 final rule, NHTSA received requests from dummy manufacturers FTSS and Denton to correct errors in and make minor changes to the ES–2re drawing package. Many of these requested changes were wholly corrective, while others, although minor, were more substantive and notice of such changes appeared beneficial. Rather than respond to the requested changes piecemeal, the agency has decided to address all the requested changes with this NPRM. Accordingly, we are issuing this NPRM to correct the ES–2re drawing package and to make corresponding changes to the parts list. In addition, we are also proposing to clarify the inclusion of load sensors and to correct dimensional errors we found in Figure 22 of 49 CFR part 572, which is a figure illustrating the pendulum used in the neck qualification test for the ES–2re and other adult crash test dummies (*e.g.*, the Hybrid III 50th percentile adult male).

II. FTSS Requested Changes

FTSS requested the following 18 changes to the ES–2re drawing package. The petitioner's requests are set forth verbatim in the list below, and following each request is NHTSA's tentative decision on the request. Comments are requested on the agency's responses.

1. "Drawing 175–1011, Top Plate UNLC Blank. Fix typographical errors for dimensions, MØ5.0, MØ6.0, MØ6, and MØ2.5. Eliminate the Ø symbol." NHTSA agrees and would remove the Ø symbol from the dimensions listed by FTSS.

2. "Drawing 175–3502, Pivot Stop Plate, Left. Fix typographical error on Note #4. Replace RH with LH since this is a left hand part." NHTSA agrees with this correction.

3. "Drawing 175–6006, Pubic Symphysis Structural Replacement. There is a Part Mark located at the center of the part. This Part Mark is not defined. FTSS recommends that the Part Mark be clarified or removed altogether from the drawing." NHTSA agrees that the part mark is unnecessary and should be removed from the drawing.

4. FTSS states:

> Drawing 175–6012, Hip Pivot Pin. FTSS believes that dimension "16.994 +0.000/−0.011" is a typographical error and should be dimensioned as "16.990 +0.000/−0.011". The Hip Pivot Pin mates to part number 5000110 (Ball Bearing)—which has an ID dimension of 17.000 +0.000/−0.008 (vendor specification). The bearing at a nominal dimension of 16.992 would not allow a Hip Pivot Pin at its maximum diameter of 16.994 to fit within the bearing.

NHTSA agrees that with the currently specified dimensions, the pin may not fit within the bearing as described by FTSS. Therefore, we agree with FTSS's request.

5. FTSS states:

> Drawing 175–6010, Iliac Wing Assembly, Left. Fix typographical error for drawing dimension "17.0556". This dimension should be "17" since it is not reasonable to control and measure this molded part to four decimal places and "17" also matches the same dimension as the Iliac Wing Assembly, Right (NHTSA Drawing 175–6002). FTSS also recommends that the drawing dimension "Ø20.03" be replaced with "Ø20.03 ± 0.10" since this dimension cannot be controlled to a tolerance of ± 0.05. We also recommend the addition of dimension "R0.5" to better define this location for easier machining of this particular section of the part and to prevent breakage due to concentrated stresses.

NHTSA agrees that dimensions on this drawing should be consistent with those on Drawing 175–6002, Iliac Wing Assembly, Right. Therefore, we have tentatively determined that the dimension 17.0556 should be changed to (17), a reference dimension. Also, the suggested R0.5 dimension appears to be acceptable and would eliminate any sharp corners in this area. However, we do not agree that the ±0.05 tolerance on the "Ø20.03" dimension is restrictive. The tolerance is necessary in order to avoid a potential interference problem with the mating part, 175–6001, Bushing. In the course of investigating this comment, we determined that the current "Ø20.03 ± 0.05" dimension could also lead to interference, so we have changed it to "Ø20.05 ± 0.05." Apart from FTSS's comments, we noticed that the material reference block was mistakenly left blank. We therefore propose to specify the material to be "PU Resin" (polyurethane) which matches the material callout on for the right iliac wing, drawing 175–6002.

6. FTSS states:

> Drawing 175–6063, Femur Bearing Plate, Left. Fix typographical errors for drawing dimensions "17.5000 ± 0.0001" and "48.3000 ± 0.0001". The tolerances are too tight to reasonably achieve at four decimal places and would add unnecessary expense when making the part. FTSS recommends that these dimensions should be specified as "17.5 ± 0.5" and "48.3". These recommended dimensions would also match the existing dimensions on the Femur Bearing Plate, Right (NHTSA Drawing 175–6068).

NHTSA agrees with FTSS and proposes to change the "48.3000 ± 0.0001" dimension to "48.3." The 17.5000 dimension for hole depth in zone C–2 has been changed to (17.5) to indicate a reference since the depth is already called out in the hole size dimension in zone D–2. Also, NHTSA has fixed a typo in zone D–1 by eliminating an extra "R" in the R23.5 dimension.

7. "Drawing 175–6068, Femur Bearing Plate, Right. Fix typographical errors by removing the parenthesis from around dimensions '(48.3)' and '(17.5 ± 0.5)'. This will maintain consistency between NHTSA Drawings 175–6068 and 175–6063."

NHTSA agrees with FTSS that the 48.3 dimension should not be a reference dimension, and the parentheses indicating this is a reference dimension should be removed. However, NHTSA does not agree that the parentheses should be removed from '(17.5 ± 0.5)'. This should remain a reference dimension since the depth is already called out in the hole size dimension in zone D–2.

8. FTSS states:

> Drawing 175–6002, Iliac Wing Assembly, Right. FTSS recommends that the drawing

[1] That final rule adopting the ES–2re into 49 CFR part 572 was published December 14, 2006 (71 FR 75303, Docket No. NHTSA–04–25441).

dimension "Ø20.03" be replaced with "Ø20.03 ± 0.10" since this dimension cannot be controlled to ± 0.05. We also recommend the addition of dimension "R0.5" to better define this location for easier machining of this particular section of the part and to prevent breakage due to concentrated stresses.

As discussed in item 5 above, NHTSA agrees that defining a radius of 0.5 mm as suggested would be beneficial, but we do not agree that the tolerance of the Ø20.03 dimension should be increased to ±0.10. Furthermore, we have changed the dimension to "Ø20.05 ± 0.05" for the reasons cited in response to item 5.

9. FTSS states:

Drawing 175–2003, Plate, Neck Head & Torso Interface. FTSS recommends that NHTSA part number 5000049 Helicoil, M6 x 1 x 6, be replaced with part number 5000729 Helicoil M6 x 1 x 4.5 because the 5000049 Helicoil is too long and may not sit below the machined surface due to stack up tolerance of parts. FTSS also suggests the addition of dimension "4X R3.2 to the Surface" on Detail Z in order to clarify the dimension.

NHTSA concurs that, with regard to the Helicoil, Section C–C of the drawing shows that the thickness of the part in that section is 5 mm and thus the M6 x 1 x 6 helicoil (which is 6 mm in length) would be too long. We agree this part should be changed to "Helicoil, M6 x 1 x 4.5." In accordance with this change, part 5000729, Helicoil, M6 x 1 x 4.5, should replace part 5000049, Helicoil M6 x 1 x 6 on the parts/drawings list. With regard to the "4 x R3.2 to the Surface" note, we agree that this note is acceptable, as it defines a clearance space for the fastener.

10. FTSS states:

Drawing 175–3000, Shoulder Assembly. FTSS recommends that NHTSA part number 5000014 SHCS, M6 x 1 x 35, be replaced with part number 5000008 SHCS, M6 x 1 x 30 because the 5000014 SHCS is too long to properly secure the assembled parts. The M6 x 1 x 35 SHCS is supposed to secure the Shoulder Top Plate (175–3008) to the Shoulder Spacer Block (175–3002). However, the Shoulder Top Plate has a material thickness of 8 mm and the Shoulder Spacer Block has a material thickness of 25.5 mm. Together, the overall thickness of the combined parts is 33.5 mm—which is 1.5 mm shallower than the length of the 35 mm long SHCS. This will create a condition where the 35 mm SHCS will not clamp the parts properly. A M6 x 1 x 30 SHCS will provide a 3.5 mm clearance to the bottom of the threaded holes on the Shoulder Spacer Block and is therefore an appropriate fastener for this application.

NHTSA is denying this request. In determining that the 35 mm bolt specified in Item 17 is too long, FTSS apparently failed to recognize that the Neck Bracket (175–2501) also sits on top of the Shoulder Top Plate and the bolt in question passes through the flange of the Neck Bracket, which is 12 mm thick. Thus, the total stack height is 45.5 mm. This includes the Neck Bracket (12 mm), the Shoulder Top Plate (8 mm), and the Shoulder Spacer Block (25.5 mm). Thus, the 35 mm bolt is not too long, as FTSS suggests. We note that a 30 mm bolt, which FTSS recommends, would work for this application. However, the 35 mm bolt is a better choice because it provides more thread engagement with the Shoulder Spacer Block.

11. "Drawing 175–3011, CAM Buffer Pad. FTSS has noted that the current dimensions for this part have tolerances that are too tight to accurately control a molded part. We recommend that the NHTSA drawing dimensions: "Ø5.0", "90.0", "5.0", and "21.2 ± 0.2" be replaced with these dimensions: "Ø5", "90", "5", "21.2 ± 0.3"."

NHTSA agrees to the changes. Although this part is essentially a protection device for the shoulder cam clavicle, it does not need to be manufactured to exact tolerances. There are no critical fit issues with any of the dimensions listed in the request.

12. "Drawing 175–7058, Friction Plate Retaining Stud. FTSS believes that the Datum A tolerance of ".0003" for the perpendicular surfaces is unnecessarily tight at four decimal places. FTSS stated, "We recommend a tolerance of '.003' because the NHTSA tolerance is too tight to be reasonably measured and therefore accurately controlled. Furthermore, at tolerance of '.0003' would add unnecessary cost to the part."

The agency agrees that the tolerance is unnecessarily restrictive and can be changed to 0.003 in for the reasons listed by FTSS.

13. "Drawing 175–7085–1, Knee Flesh, Left. There is a note on the drawing that states: ¼″ OVER WIDTH "A" FOR 180°. But, "A" is not defined on the drawing. However, "A" is defined on the corresponding drawing 175–7085–2, Knee Flesh, Right. FTSS recommends that drawing 175–7085–1 be corrected to add a definition for "A" to match drawing 175–7085–2—which specifies that "A = 1¾″."

NHTSA agrees that the Knee Flesh Left and Right drawings should be consistent and therefore "A" be defined on Drawing 175–7085–1 as it is on 175–7085–2.

14. "Drawing 175–7090–1, Thigh Molded, Left. Fix typographical errors for drawing dimensions "(2x ØØ24)" and "(2x Ø14)". These dimensions should be listed as "(2x Ø24)" and "(2x14)". Removal of extra or redundant Ø symbol is required. This would also make this part consistent with the Thigh Molded, Right drawing (NHTSA Drawing 175–7090–2)."

NHTSA agrees that the (2x ØØ24) dimension should be changed to (2x Ø24) and that (2x Ø14) should be changed to (2x14).

15. "Drawing 175–9013, Bearing. The drawing has a reference to Note #2 in the revision record (REV B), but the note is missing from the "NOTES" field. FTSS recommends that the note be added to the note field, or the note reference be eliminated from the revision record."

NHTSA believes that revision record B is incorrect, and should be corrected to read "ADDED REF. TO MATERIAL SPECIFICATION".

16. "Drawing 175–9014, Pin Machined. Correct typographical error for missing revision indicator for REV B on the Material Reference. The revision record states "ADDED REF. TO MATERIAL SPECIFICATION"; however no revision reference bubble was added."

NHTSA agrees that a reference indicator for revision "B" should be added next to the material specification.

17. FTSS states:

Drawing 175–9027, Lower Mounting Base. FTSS recommends that the following NHTSA dimensions "92.5 +0/− 0.2", "66.5 +0/−0.2", and "4 x 6 x 45°" be replaced with "91.4 +0/−0.2", "66.0 +0/−0.2", and "4 x 9.7 x 45°" respectively. We recommend these changes due to the wider tolerances associated with typical product dimensions specified for the 3″ x 4″ tubular steel beam that the Lower Mounting Base fits into. These tolerances are typically ± 0.030 for the tubular beam so our recommended dimensional changes for the Lower Mounting Base is necessary to guarantee that the Lower Mounting Base will fit into the wide variety of pendulums beams in the marketplace.

Our decision at this point is not to agree with the requested dimensional changes. The parts presently owned by NHTSA, which were purchased from FTSS, do not meet the requested dimensions. They do, however, fall within the tolerances of the dimensions currently specified on the drawing. We have tentatively decided not to make the suggested change to this drawing.

18. FTSS states:

Drawing SA572–S71–1, Lower Neck Load Cell Assembly. FTSS recommends that specification of the part weight be correct[ed] to include the weight of the two connector/cable assemblies. The weight currently specified for this part in the NHTSA drawing is "0.8 lb./0.36 kg MAX." However, this weight does not include the weight of the electrical connector/cable assemblies. Since the cables are hard wired to the load cell, they need to be included in the total weight. Therefore, we request that the assembly weight be listed as "0.93 lb./0.42 kg MAX" to include the two cable assemblies.

We have some concerns about this recommendation. We concur that the currently specified weight, 0.8 lb/0.36 kg, is the nominal weight of the lower neck load cell only. It does not include the mass of the cable assemblies or the bracket. However, the critical mass is that of the entire assembly—not the load cell alone—as it should match the corresponding mass of the structural replacement (drawing 175–2501). Drawing SA572–S71–1 is aimed to allow some amount of design flexibility to accommodate load cells from different manufacturers. As long as the entire bracket assembly duplicates the geometry of the structural replacement, slight variations among load cell models are acceptable. With this consideration in mind, we propose making the specification for load cell weight a reference. This will allow load cell manufacturers to know the target weight for the load cell, but will not require that the weight be measured and verified by end users. We also note that the drawing would indicate that the reference weight specification applies to item 1 (the lower neck load cell) only, and not the entire assembly.

III. Denton Requested Changes

Denton requested the following 6 changes to the ES–2re drawing package. The petitioner's requests are set forth verbatim in the list below, and following each request is NHTSA's tentative decision on the request.

1. Denton states:

Drawing No. 175–1001: NHTSA drawing specifies the distance between the upper 2 holes to be 71.2 mm apart. The ES–2re skull dimensions are derived from the Hybrid III 50th dimensions. This dimension in the Hybrid III 50th drawing package is 2.800 inches, which converts to 71.1 mm. Additionally, the distance between the holes on the mating part (175–1003) is 71.12. Therefore, we would like to request that the dimension on the above referenced drawing be changed to 71.1.

NHTSA agrees that 71.1 mm is the correct dimension. Given the tolerances of the hole sizes, this will allow the skull and skull cap to match each other in assembly.

2. "Drawing No. 175–3017: NHTSA drawing specifies the material for this part to be "Moulded Ureol 100". This is a material manufactured by a single supplier. We would like to request that the specification for the material be more generic or add "Or Equivalent" to the specification."

We are denying the request as redundant. Because the drawing already indicates that this material is a reference for material selection and thus another equivalent material can be used, it is unnecessary to add "or equivalent."

3. "Drawing No. 175–4006: NHTSA drawing specifies 'Screw, SHCS M3 x .5 x 8' for item no. 18. We would like to request that the specification be changed to 'Screw, BHCS M3 x .5 x 8['] as a button head screw has more surface area under the head thus providing better clamping force and less distortion to part no. 175–4031."

NHTSA believes that the current socket head cap screw (SHCS) will work sufficiently, but agrees that a button head cap screw (BHCS) would also be acceptable. Therefore, we are keeping the part as a SHCS, but are adding an option to the drawing that allows use of the BHCS M3 x .5 x 8.

4. "Drawing No. 175–4012: NHTSA drawing calls out 4X M3 x .5 ISO—H Tap x 6.0 Deep. We would like to request that these tapped holes be made optional as they serve no purpose in the assembly of the dummy."

NHTSA agrees that these holes are not required for any functional purpose and should be specified as optional.

5. "Drawing Nos. 175–4040, 175–4041 & 175–4042: NHTSA drawing specifies that the free length tolerance should be +/− 1 mm. According to the Spring Manufacturers Institute (SMI), the normal commercial tolerance for the length should be +/−3 mm when the spring index, length and number of coils are considered for these specific springs. Therefore, we would like to request that the free length tolerance be changed to +/−3 mm."

NHTSA does not agree with this request. Increasing the tolerance of the free spring length could create problems with variation in dummy thoracic response, since these springs are part of the ES–2re rib modules. For example, if the free spring length is too long, this could lead to a large preload in the spring and greater resistance to compression. Conversely, if the free spring length is too short, the spring will offer less resistance to compression. Therefore, we are denying the request and are maintaining a spring length tolerance of +/− 1 mm.

6. Denton states:

Drawing Nos. 175–7053–1, 175–7053–3 & 175–7055: NHTSA drawing specifies [a] through hole diameter of .373 +.0005/−.0000. We believe the hole diameter is too small and the tolerance is unnecessarily tight. At minimum diameter condition of the hole, a ⅜ diameter shoulder bolt may not go through. At the maximum diameter condition of the hole, assembly of the knee is still very difficult as there still may only be .0005 in. clearance. Therefore, we would like to request the hole diameter tolerance be changed to +.005/−.000 on these three drawings.

NHTSA is denying this request. The ES–2re knee design is a carry-over from the Hybrid II dummy, Part 572 Subpart B. The design is also incorporated into the knee of the SID dummy, Subpart F. The knee plates are designed to provide a very tight fit, and careful selection of the bolt will allow the knee assembly to function properly. The SID has had many years of use, and we know of no reports of problems assembling the knee. Furthermore, Denton has not provided evidence that its request to allow a loose fit will not result in any performance degradation.

IV. Corrections to Figure 22

NHTSA observed that Figure 22, "Pendulum Specifications," of 49 CFR part 572 has several dimensional errors that need correction. This pendulum is used in neck qualification tests for the ES–2re as well as other adult crash test dummies, including the Hybrid III 50th percentile male and 5th percentile female frontal crash test dummies, the SID–IIsD 5th percentile female side impact dummy, and the SID and SID/HIII side impact crash test dummies. The dimensional corrections that should be made to this figure are listed below and shown in Figure 1 of this preamble, below:

- The 8.28 millimeter (mm) (32.6 inch (in)) dimension should be 828 mm (32.6 in);
- The 4.8 mm (188 in) dimension should be 4.8 mm (0.188 in);
- The 198.6 mm (7.75 in) dimension should be 196.8 mm (7.75 in).

BILLING CODE 4910–59–P

FIGURE 22

PENDULUM SPECIFICATIONS

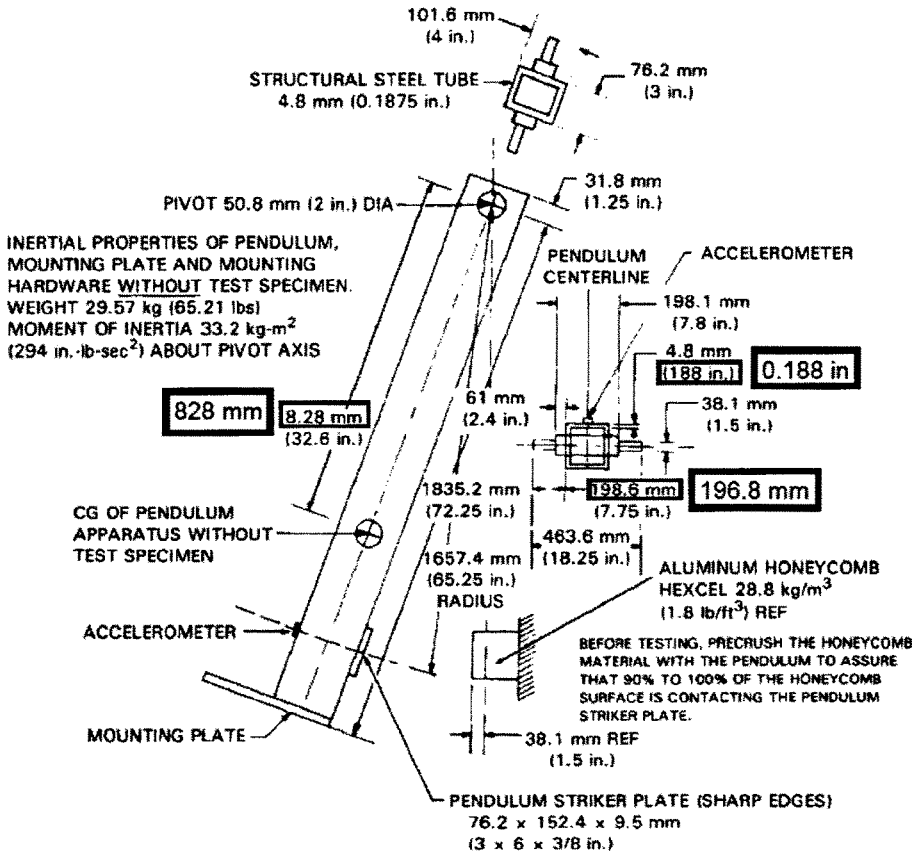

Figure 1: Corrections to pendulum dimensions in Figure 22 of Section 572.33(c)(3)

BILLING CODE 4910–59–C

V. Rulemaking Analyses and Notices

Executive Order 12866 and DOT Regulatory Policies and Procedures

Executive Order 12866, "Regulatory Planning and Review" (58 FR 51735, October 4, 1993), provides for making determinations whether a regulatory action is "significant" and therefore subject to Office of Management and Budget (OMB) review and to the requirements of the Executive Order. This proposed rulemaking action was not considered a significant regulatory action under Executive Order 12866. This proposed rulemaking action was also determined not to be significant under the Department of Transportation's (DOT's) regulatory policies and procedures (44 FR 11034, February 26, 1979). This proposed rule would only correct or make slight changes to some of the drawings of the ES–2re test dummy. These changes would not affect the cost of the dummy. Because the economic impacts of this proposal are so minimal, no further regulatory evaluation is necessary.

Regulatory Flexibility Act

Pursuant to the Regulatory Flexibility Act (5 U.S.C. 601 *et seq.*, as amended by the Small Business Regulatory Enforcement Fairness Act (SBREFA) of 1996), whenever an agency is required to publish a proposed or final rule, it must prepare and make available for public comment a regulatory flexibility analysis that describes the effect of the rule on small entities (*i.e.,* small businesses, small organizations, and small governmental jurisdictions), unless the head of the agency certifies the rule will not have a significant economic impact on a substantial number of small entities. The Small Business Administration's regulations at 13 CFR part 121 define a small business, in part, as a business entity "which operates primarily within the United States." (13 CFR 121.105(a)).

We have considered the effects of this rulemaking under the Regulatory Flexibility Act. I hereby certify that the proposed rulemaking action would not have a significant economic impact on a substantial number of small entities. This action would not have a significant economic impact on a substantial number of small entities because correcting or making minor changes to the drawings would not impose any

requirements on anyone. NHTSA would not require anyone to manufacture or redesign the dummy.

National Environmental Policy Act

NHTSA has analyzed this proposal for the purposes of the National Environmental Policy Act and determined that it will not have any significant impact on the quality of the human environment.

Executive Order 13132 (Federalism)

NHTSA has examined today's proposed rule pursuant to Executive Order 13132 (64 FR 43255, August 10, 1999) and concluded that no additional consultation with States, local governments or their representatives is mandated beyond the rulemaking process. The agency has concluded that the proposed rule does not have federalism implications because the proposed rule does not have "substantial direct effects on the States, on the relationship between the national government and the States, or on the distribution of power and responsibilities among the various levels of government." This proposed rule would not impose any requirements on anyone. Businesses would be affected only if they choose to manufacture or test with the dummy.

Further, no consultation is needed to discuss the preemptive effect of today's proposed rule. NHTSA's safety standards can have preemptive effect in at least two ways. This proposed rule would amend 49 CFR part 572 and is not a safety standard.[2] If this proposed Part 572 rule becomes final, it would not impose any requirements on anyone.

Civil Justice Reform

This proposed rule would not have any retroactive effect. Under 49 U.S.C. 30103, whenever a Federal motor vehicle safety standard is in effect, a State may not adopt or maintain a safety standard applicable to the same aspect of performance which is not identical to the Federal standard, except to the extent that the State requirement imposes a higher level of performance and applies only to vehicles procured for the State's use. 49 U.S.C. 30161 sets forth a procedure for judicial review of final rules establishing, amending, or revoking Federal motor vehicle safety standards. That section does not require submission of a petition for reconsideration or other administrative proceedings before parties may file suit in court.

Paperwork Reduction Act

Under the Paperwork Reduction Act of 1995, a person is not required to respond to a collection of information by a Federal agency unless the collection displays a valid control number from the Office of Management and Budget (OMB). This proposed rule would not have any requirements that are considered to be information collection requirements as defined by the OMB in 5 CFR part 1320.

National Technology Transfer and Advancement Act

Section 12(d) of the National Technology Transfer and Advancement Act of 1995 (NTTAA), Public Law 104–113, section 12(d) (15 U.S.C. 272) directs NHTSA to use voluntary consensus standards in its regulatory activities unless doing so would be inconsistent with applicable law or otherwise impractical. Voluntary consensus standards are technical standards (*e.g.,* materials specifications, test methods, sampling procedures, and business practices) that are developed or adopted by voluntary consensus standards bodies. The NTTAA directs NHTSA to provide Congress, through OMB, explanations when the agency decides not to use available and applicable voluntary consensus standards. There are no voluntary consensus standards relevant to this proposed rule.

Unfunded Mandates Reform Act

Section 202 of the Unfunded Mandates Reform Act of 1995 (UMRA), Public Law 104–4, Federal requires agencies to prepare a written assessment of the costs, benefits, and other effects of proposed or final rules that include a Federal mandate likely to result in the expenditure by State, local, or Tribal governments, in the aggregate, or by the private sector, of more than $100 million annually (adjusted for inflation with base year of 1995). Before promulgating an NHTSA rule for which a written statement is needed, section 205 of the UMRA generally requires the agency to identify and consider a reasonable number of regulatory alternatives and adopt the least costly, most cost-effective, or least burdensome alternative that achieves the objectives of the rule.

This proposed rule would not impose any unfunded mandates under the UMRA. This proposed rule would not meet the definition of a Federal mandate because it would not impose requirements on anyone. It would amend 49 CFR part 572 by correcting or making minor changes to some of the drawings for a test dummy that the agency uses. If this proposed rule becomes final, it would affect, in a small manner, only those businesses that choose to manufacture or test with the dummy. It would not result in costs of $100 million or more to either State, local, or Tribal governments, in the aggregate, or to the private sector.

Plain Language

Executive Order 12866 requires each agency to write all rules in plain language. Application of the principles of plain language includes consideration of the following questions:

—Has the agency organized the material to suit the public's needs?
—Are the requirements in the rule clearly stated?
—Does the rule contain technical language or jargon that is not clear?
—Would a different format (grouping and order of sections, use of headings, paragraphing) make the rule easier to understand?
—Would more (but shorter) sections be better?
—Could the agency improve clarity by adding tables, lists, or diagrams?
—What else could the agency do to make this rulemaking easier to understand?

If you have any responses to these questions, please include them in your comments on this NPRM.

Regulation Identifier Number

The Department of Transportation assigns a regulation identifier number (RIN) to each regulatory action listed in the Unified Agenda of Federal Regulations. The Regulatory Information Service Center publishes the Unified Agenda in April and October of each year. You may use the RIN contained in the heading at the beginning of this document to find this action in the Unified Agenda.

VI. Public Participation

How Do I Prepare and Submit Comments?

Your comments must be written and in English. To ensure that your

[2] With respect to the safety standards, the National Traffic and Motor Vehicle Safety Act contains an express preemptive provision: "When a motor vehicle safety standard is in effect under this chapter, a State or a political subdivision of a State may prescribe or continue in effect a standard applicable to the same aspect of performance of a motor vehicle or motor vehicle equipment only if the standard is identical to the standard prescribed under this chapter." 49 U.S.C. 30103(b)(1). Second, the Supreme Court has recognized the possibility of implied preemption: State requirements imposed on motor vehicle manufacturers, including sanctions imposed by State tort law, can stand as an obstacle to the accomplishment and execution of an NHTSA safety standard. When such a conflict is discerned, the Supremacy Clause of the Constitution makes their State requirements unenforceable. *See Geier* v. *American Honda Motor Co.,* 529 U.S. 861 (2000).

comments are correctly filed in the Docket, please include the docket number of this document in your comments.

Your comments must not be more than 15 pages long. (49 CFR 553.21). We established this limit to encourage you to write your primary comments in a concise fashion. However, you may attach necessary additional documents to your comments. There is no limit on the length of the attachments.

Please submit your comments by any of the methods provided above under **ADDRESSES**.

Please note that pursuant to the Data Quality Act, in order for substantive data to be relied upon and used by the agency, it must meet the information quality standards set forth in the OMB and DOT Data Quality Act guidelines. Accordingly, we encourage you to consult the guidelines in preparing your comments.

Further, note that anyone is able to search the electronic form of all comments received into any of our dockets by the name of the individual submitting the comment (or signing the comment, if submitted on behalf of an association, business, labor union, *etc.*). You may review DOT's complete Privacy Act Statement in the **Federal Register** published on April 11, 2000 (65 FR 19477–78).

How Do I Submit Confidential Business Information?

If you wish to submit any information under a claim of confidentiality, you should submit three copies of your complete submission, including the information you claim to be confidential business information, to the Chief Counsel, NHTSA, at the address given above under **FOR FURTHER INFORMATION CONTACT**. In addition, you should submit a copy from which you have deleted the claimed confidential business information to the Docket using any of the methods given above under **ADDRESSES**. When you send a comment containing information claimed to be confidential business information, you should include a cover letter setting forth the information specified in our confidential business information regulation. (49 CFR part 512.)

Will the Agency Consider Late Comments?

We will consider all comments that the Docket receives before the close of business on the comment closing date indicated above under **DATES**. To the extent possible, we will also consider comments that the Docket receives after that date. If the Docket receives a comment too late for us to consider in developing a final rule (assuming that one is issued), we will consider that comment as an informal suggestion for future rulemaking action.

How Can I Read the Comments Submitted by Other People?

You may read the comments received by the Docket at the address given above under **ADDRESSES**. The hours of the Docket are indicated above in the same location. You may also see the comments on the Internet. To read the comments on the Internet, go to *http://www.regulations.gov*. Follow the online instructions for accessing the dockets.

Please note that even after the comment closing date, we will continue to file relevant information in the Docket as it becomes available. Further, some people may submit late comments. Accordingly, we recommend that you periodically check the Docket for new material.

List of Subjects in 49 CFR Part 572

Motor vehicle safety, Incorporation by reference.

In consideration of the foregoing, NHTSA is proposing to amend 49 CFR part 572 as follows:

PART 572—ANTHROPOMORPHIC TEST DEVICES

1. The authority citation for part 572 continues to read as follows:

Authority: 49 U.S.C. 322, 30111, 30115, 30117 and 30166; delegation of authority at 49 CFR 1.50.

Subpart E—Hybrid III Test Dummy

2. In § 572.33, revise Figure 22 following paragraph (c)(3) to read as follows:

§ 572.33 Neck.

* * * * *

(c) * * *

(3) * * *

FIGURE 22

PENDULUM SPECIFICATIONS

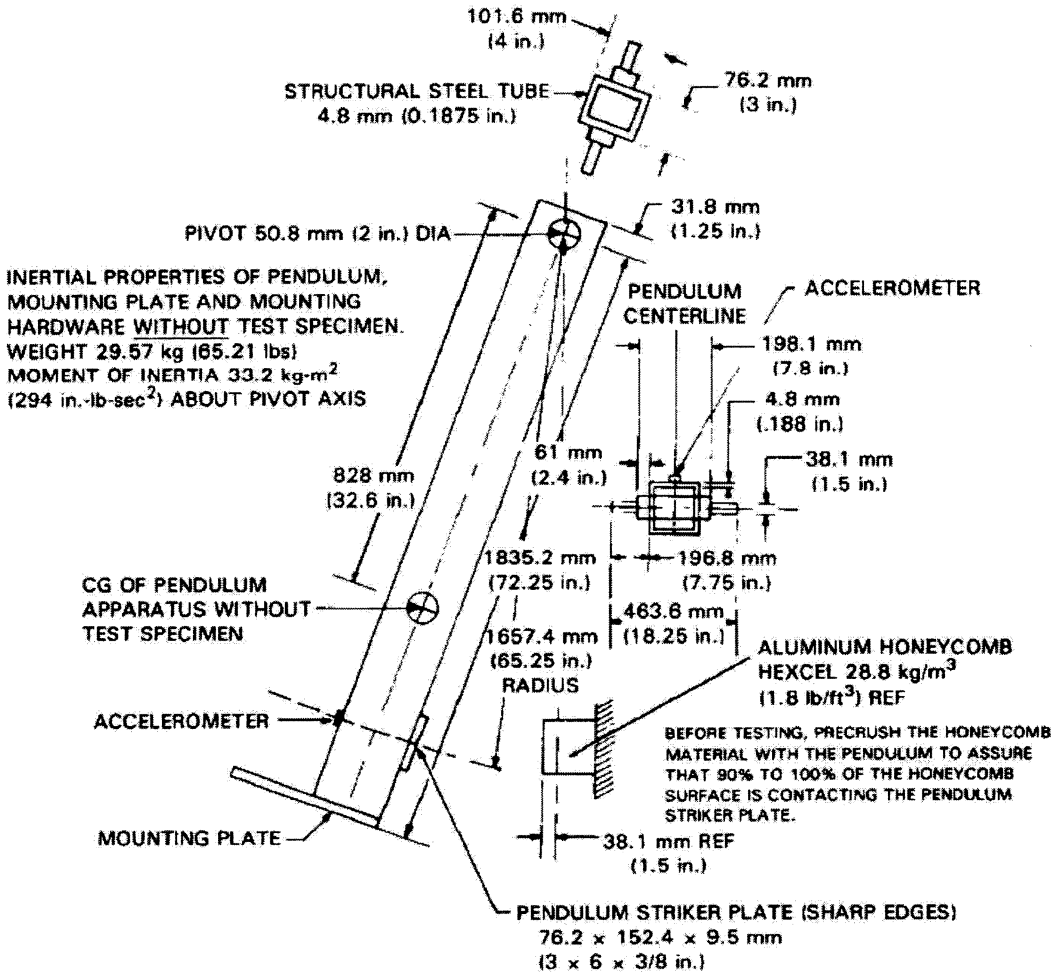

BILLING CODE 4910–59–C

* * * * *

Subpart U—ES–2re Side Impact Crash Test Dummy, 50th Percentile Adult Male

3. Section 572.180 is amended by revising paragraph (a)(1), the introductory text of paragraph (a)(2), and paragraph (c)(1), to read as follows:

§ 572.180 Incorporated materials.

(a) * * *

(1) A parts/drawing list entitled, "Parts/Drawings List, Part 572 Subpart U, Eurosid 2 with Rib Extensions (ES2re), September 2009,"

(2) A drawings and inspection package entitled "Parts List and Drawings, Part 572 Subpart U, Eurosid 2 with Rib Extensions (ES–2re, Alpha Version), September 2009," consisting of:

* * * * *

(c) * * *

(1) The Parts/Drawings List, Part 572 Subpart U, Eurosid 2 with Rib Extensions (ES2re) referred to in paragraph (a)(1) of this section, the Parts List and Drawings, Part 572 Subpart U, Eurosid 2 with Rib Extensions (ES–2re, Alpha Version) referred to in paragraph (a)(2) of this section, and the PADI document referred to in paragraph (a)(3) of this section, are available in electronic format through Regulations.gov and in paper format from Leet-Melbrook, Division of New RT, 18810 Woodfield Road, Gaithersburg, MD 20879, telephone (301) 670–0090.

* * * * *

4. Section 572.181 is amended by revising paragraphs (a), (b), and (c) to read as follows:

§ 572.181 General description.

(a) The ES–2re Side Impact Crash Test Dummy, 50th Percentile Adult Male, is defined by:

(1) The drawings and specifications contained in the "Parts List and Drawings, Part 572 Subpart U, Eurosid 2 with Rib Extensions (ES–2re, Alpha Version), September 2009," incorporated by reference in § 572.180, which includes the technical drawings and specifications described in Drawing 175–0000, the titles of which are listed in Table A;

TABLE A

Component assembly	Drawing No.
Head Assembly	175–1000
Neck Assembly Test/Cert	175–2000
Neck Bracket Including Lifting Eyebolt	175–2500
Shoulder Assembly	175–3000
Arm Assembly-Left	175–3500
Arm Assembly-Right	175–3800
Thorax Assembly with Rib Extensions	175–4000
Abdominal Assembly	175–5000
Lumbar Spine Assembly	175–5500
Pelvis Assembly	175–6000
Leg Assembly, Left	175–7000–1
Leg Assembly, Right	175–7000–2
Neoprene Body Suit	175–8000

(2) "Parts/Drawings List, Part 572 Subpart U, Eurosid 2 with Rib Extensions (ES2re), September 2009," containing 9 pages, incorporated by reference in § 572.180,

(3) A listing of available transducers-crash test sensors for the ES–2re Crash Test Dummy is shown in drawing 175–0000 sheet 4 of 6, dated February 2008, incorporated by reference in § 572.180,

(4) Procedures for Assembly, Disassembly and Inspection (PADI) of the ES–2re Side Impact Crash Test Dummy, February 2008, incorporated by reference in § 572.180,

(5) Sign convention for signal outputs reference document SAE J1733 Information Report, titled "Sign Convention for Vehicle Crash Testing" dated December 1994, incorporated by reference in § 572.180.

(b) Exterior dimensions of ES–2re test dummy are shown in drawing 175–0000 sheet 3 of 6, dated February 2008.

(c) Weights of body segments (head, neck, upper and lower torso, arms and upper and lower segments) and the center of gravity location of the head are shown in drawing 175–0000 sheet 2 of 6, dated February 2008.

* * * * *

Issued: January 29, 2010.

Stephen R. Kratzke,

Associate Administrator for Rulemaking.

[FR Doc. 2010–2308 Filed 2–4–10; 8:45 am]

BILLING CODE 4910–59–P

Notices

Federal Register

Vol. 75, No. 24

Friday, February 5, 2010

This section of the FEDERAL REGISTER contains documents other than rules or proposed rules that are applicable to the public. Notices of hearings and investigations, committee meetings, agency decisions and rulings, delegations of authority, filing of petitions and applications and agency statements of organization and functions are examples of documents appearing in this section.

DEPARTMENT OF AGRICULTURE

Agricultural Marketing Service

[Docket No. AMS–TM–09–0080; TM–09–10]

Notice of Request for Extension and Revision of a Currently Approved Information Collection

AGENCY: Agricultural Marketing Service, USDA.

ACTION: Notice and request for comments.

SUMMARY: In accordance with the Paperwork Reduction Act of 1995 (44 U.S.C. Chapter 35), this notice announces the Agricultural Marketing Service's (AMS) intention to request approval, from the Office of Management and Budget, for an extension of and revision to the currently approved information collection, Federal-State Marketing Improvement Program (FSMIP).

DATES: Comments on this notice must be received by April 6, 2010 to be assured of consideration.

Additional Information or Comments: Contact Janise Zygmont, Staff Officer, Federal-State Marketing Improvement Program, Transportation and Marketing Program, Agricultural Marketing Service, U.S. Department of Agriculture, 1800 M Street, NW., Room 3002–South Tower, Washington, DC 20036, telephone: 202–694–4002; fax: 202–694–5950.

SUPPLEMENTARY INFORMATION: FSMIP is authorized under Section 204(b) of the Agricultural Marketing Act of 1946 (7 U.S.C. 1621 *et seq.*). FSMIP provides matching grants on a competitive basis to enable States to explore new market opportunities for U.S. food and agricultural products and to encourage research and innovation aimed at improving the efficiency and performance of the U.S. marketing system.

Title: Federal-State Marketing Improvement Program (FSMIP).

OMB Number: 0581–0240.

Type of Request: Extension and revision of a currently approved information collection.

Expiration Date of Approval: August 31, 2010.

Abstract: The primary objective of FSMIP is to enable States to explore new market opportunities for U.S. food and agricultural products and to encourage research and innovation aimed at improving the efficiency and performance of the U.S. marketing system. Eligible entities under this program include State departments of agriculture, State agricultural experiment stations, and other appropriate State Agencies.

AMS has established guidelines that contain full details about FSMIP and the application process. The guidelines and application forms are available from the FSMIP Staff Officer by calling 202/694–4002, faxing-202/694–5950, or e-mailing to *janise.zygmont@ams.usda.gov*. This information is also available at the FSMIP Web site: *http://www.ams.usda.gov/FSMIP*. FSMIP applicants must complete Form SF–424, "Application for Federal Assistance," (approved under OMB #4040–0004) for each application. Form SF–424A, "Budget Information—Non-Construction Programs," (approved under OMB #4040–0006) also must be completed for each application to show the project's budget breakdown, both with regard to expense categories and the division between Federal and matching non-Federal sources, as applicable. A Proposal Narrative is also required for each application.

AMS needs to receive the information contained in this collection of information to select the projects that will best meet and fulfill FSMIP program objectives. The selection process is competitive and AMS must ensure that limited funds are used for the intended purpose.

Estimate of Burden: The public reporting burden for completing the SF–424, SF–424A, and the Proposal Narrative is estimated to average 12.25 hours per response.

Respondents: State departments of agriculture, State agricultural experiment stations, and other appropriate State Agencies.

Estimated Number of Respondents: 75.

Estimated Total Annual Responses: 450.

Estimated Number of Responses per Respondent: 6.

Estimated Total Annual Burden on Respondents: 5,513 hours.

After approval of the grant application and before grant funds are dispersed, grantees must complete the following forms to certify compliance with applicable Federal regulations: Form SF–424B, "Assurances—Non-Construction Programs," (approved under OMB #4040–0007); AD–1047, Certification Regarding Debarment, Suspension, and Other Responsibility Matters—Primary Covered Transactions; AD–1048, Certification Regarding Debarment, Suspension, Ineligibility and Voluntary Exclusion—Lower Tier Covered Transactions; and AD–1049, Certification Regarding Drug-Free Workplace Requirements (Grants) Alternative 1-for Grantees Other Than Individuals.

In addition, two copies of the Grant Agreement must be signed with an original signature and dated once by grantees after their proposals have been approved and before grant funds are dispersed. In the past, grantees were required to sign four copies of the Grant Agreement. AMS has determined that having grantees sign four original Grant Agreements was not necessary. This decision has no impact on the public reporting burden. The information will be used to affirm the award amount, time frame, objectives and work plan agreed upon by the grantee and USDA/AMS. The Grant Agreement also outlines responsibilities of both parties with regard to the grant.

Standard Form 270, Request for Advance or Reimbursement (approved under OMB #0348–0004), is completed whenever the grantee requests an advance or reimbursement of grant funds. The information will be used to keep track of grant disbursements and the level of matching funds expended by the grantee during the grant period. We expect that grantees will submit a total of three SF–270 forms during the grant period.

Estimate of Burden: The public reporting burden for completing the SF–424B, AD–1047, AD–1048, AD–1049, the Grant Agreement, and three SF–270 forms is estimated to average 3.23 hours per response.

Respondents: State departments of agriculture, State agricultural experiment stations, and other appropriate State Agencies.

Estimated Number of Respondents: 25.

Estimated Total Annual Responses: 200.

Estimated Number of Responses per Respondent: 8.

Estimated Total Annual Burden on Respondents: 646 hours.

Progress Reports are required at the midpoint of projects approved for one year and at six-month intervals for projects of longer duration. Progress Reports should (1) briefly summarize activities performed and milestones achieved for each objective or sub-element of the narrative; (2) note unexpected delays or impediments as well as favorable or unusual developments; (3) outline work to be performed during the succeeding period; and (4) indicate the amount of grant and matching funds expended to date. We expect that grantees will submit a total of two Progress Reports during the grant period.

Estimate of Burden: The public reporting burden for two Progress Reports is estimated to average 14 hours per response.

Respondents: State departments of agriculture, State agricultural experiment stations, and other appropriate State Agencies.

Estimated Number of Respondents: 25.

Estimated Total Annual Responses: 50.

Estimated Annual Number of Responses per Respondent: 2.

Estimated Total Annual Burden on Respondents: 700 hours.

Not later than 90 days following the ending date of the Grant Agreement the grantee must submit Standard Form 425, Federal Financial Report (approved under OMB #0348–0061), to document the final financial status of the grant project and to indicate that the one-to-one matching requirement has been met. In the past, grantees used Standard Form 269A (or Standard Form 269 if the grant involved program income) to document the final financial activity of the grant. Standard Forms 269A and 269 were discontinued by OMB as of October 1, 2009. AMS has determined that a new form, Standard Form 425 (OMB Approval Number 0348–0061), is an acceptable replacement that will allow grantees to report the final financial activity of the grant. The public reporting burden for Standard Form 425 is estimated to average 1.5 hours per response, which is the same as the reporting burden for Standard Form 269A.

The grantee must also submit a Final Report of results and accomplishments within 90 days following the grant ending date. The Final Report will include:

- An outline of the issue or problem.
- A description of how the issue or problem was approached via the project.
- A description of the contribution of public or private agency cooperators.
- A description of results, conclusions and lessons learned.
- A summary of current or future benefits to be derived from the project.
- Additional information available (publications, Web sites).
- Recommendations for future research needed, if applicable.
- A description of the project beneficiaries.
- The contact person for the project with telephone number and e-mail address.

Estimate of Burden: The public reporting burden for completing Standard Form 425 and the Final Report is estimated to average 16.78 hours per response.

Respondents: State departments of agriculture, State agricultural experiment stations, and other appropriate State agencies.

Estimated Number of Respondents: 25.

Estimated Total Annual Responses: 50.

Estimated Number of Responses per Respondent: 2.

Estimated Total Annual Burden on Respondents: 838 hours.

In accordance with 7 CFR 3016.42, grantees are required to maintain all financial and programmatic records, supporting documents, statistical records, and other records of grantees or sub-grantees for a period of three years from the day the grantee submits the final financial report.

Estimate of Burden: The public reporting burden for maintaining required records relating to the grant is estimated to average 1 hour per response.

Respondents: State departments of agriculture, State agricultural experiment stations, and other appropriate State agencies.

Estimated Number of Respondents: 25.

Estimated Total Annual Responses: 25.

Estimated Number of Responses per Respondent: 1.

Estimated Total Annual Burden on Respondents: 25 hours.

Comments are invited on: (1) Whether the proposed collection of information is necessary for the proper performance of the functions of the agency, including whether the information will have practical utility; (2) the accuracy of the agency's estimate of the burden of the proposed collection of information including the validity of the methodology and assumptions used; (3) ways to enhance the quality, utility, and clarity of the information to be collected; and (4) ways to minimize the burden of the collection of information on those who are to respond, including the use of appropriate automated, electronic, mechanical, or other technological collection techniques or other forms of information technology. Comments may be sent to Janise Zygmont, FSMIP Staff Officer, USDA, AMS, 1800 M Street, NW., Room 3002–South Tower, Washington, DC 20036. All comments received will be available for public inspection during regular business hours at the same address.

All responses to this notice will be summarized and included in the request for OMB approval. All comments will become a matter of public record.

Dated: February 2, 2010.

Rayne Pegg,

Administrator, Agricultural Marketing Service.

[FR Doc. 2010–2543 Filed 2–4–10; 8:45 am]

BILLING CODE 3410–02–P

DEPARTMENT OF AGRICULTURE

Forest Service

Umatilla National Forest, Walla Walla Ranger District, Walla Walla, WA; Cobbler II Timber Sale and Fuels Reduction Project

AGENCY: Forest Service, USDA.

ACTION: Notice of intent to prepare an environmental impact statement.

SUMMARY: The USDA Forest Service will prepare an environmental impact statement (EIS) to disclose environmental effects on proposed resource management actions in Cobbler II project planning area. This project would improve the health, vigor, and resilience to fire, insects, and disease in upland forest stands that are outside their historical pre-fire conditions for species composition, structural diversity, stocking densities, and fuel loads. The project planning area is approximately 34,000 acres in size. Proposed project activities consist of commercial timber harvest, including treatment of activity and natural fuels within harvest units, temporary road construction (that will be decommissioned after project use), new road construction, danger tree removal along haul routes, non-commercial thinning, hardwood restoration, meadow restoration, and landscape prescribed burning.

DATES: Comments concerning the scope of the analysis must be received by February 26, 2010. The draft environmental impact statement is expected to be available in April 2010 and the final environmental impact statement in July 2010.

ADDRESSES: Send written comments to Mike Rassbach, District Ranger, Walla Walla Ranger District, 1415 West Rose Street, Walla Walla, WA 99362. Comments may also be sent via e-mail to *comments-pacificnorthwest-umatilla-wallawalla@fs.fed.us* or via facsimile to (509) 522–6000. Comments may be hand delivered to the Walla Walla Ranger District office between the hours of 8 a.m. and 4:30 p.m., Monday through Friday, excluding Federal holidays. Individuals who use telecommunication devices for the deaf (TDD) may call the Federal Information Relay Service (FIRS) at 1–800–877–8339 between 8 a.m. and 8 p.m., Eastern Time, Monday through Friday.

FOR FURTHER INFORMATION CONTACT: Betsy Kaiser, Project Team Leader, Walla Walla Ranger District, telephone (509) 522–6290 or e-mail *bkaiser@fs.fed.us.*

SUPPLEMENTARY INFORMATION:

Background Information—An environmental assessment (EA) for Cobbler Timber Sale and Fuels Reduction Project was prepared by the Forest Service and issued to the public in May 2009. A decision notice and finding of no significant impact for the May 2009 EA was signed by the responsible official, Kevin Martin, Umatilla National Forest Supervisor, on May 18, 2009. This decision was appealed, and on July 29, 2009, Supervisor Martin sent a memo to the Regional Forester to withdraw his May 18th decision.

After the withdrawal of the decision, the Forest Service decided to initiate the Cobbler II Timber Sale and Fuels Reduction Project environmental assessment (EA) and scoped with a letter dated November 20, 2009, and comment letters were received. Since that scoping letter was mailed, the Forest Service has decided to issue an environmental impact statement (EIS) for this project. The project file for the May 2009 EA and the Cobbler II EA will be incorporated in the Cobbler II EIS. Information regarding the May 2009 Cobbler EA documents and the Cobbler II EA scoping letter are available for review at the following Web site address: *http://www.fs.fed.us/r6/uma/projects/readroom/.*

Project Information—Cobbler II project planning area is primarily located in Wallowa County and a small portion in Union County, Oregon within portions of T. 4N., R. 40E., sections 1, 2, 3, 4, 10, 11, 12, 14, and 15; T.5 N., R.40 E., sections 1, 12, 13, 14, 23, 24, 25, 26, 34, 27, 33, 34, 35, and 36; T. 4N., R. 41E., sections 5, 6, 7, and 18; T. 5N., R. 41E., sections 1 to 34; T. 5N., R. 42E., sections 4, 5, 6, and 7; T. 6N., R. 41E., sections 25, 26, 27, 33, 34, 35, and 36; and T. 6N., R. 42E., sections 29, 30, 31, 32, 33, and 34. It is in the Lower Grande Ronde subbasin, within the Grande Ronde River and Wenaha Watersheds.

Cobbler II project planning area is bounded by the Wenaha-Tucannon Wilderness to the north and west and the Grande Ronde River to the southeast. Grande Ronde River has been designated as a Wild and Scenic River by the Omnibus Oregon Wild and Scenic Rivers Act of 1988, and the segment bordering the project planning area has been designated as wild. The town of Elgin, Oregon, is approximately 20 miles to the southwest. Troy and Eden Bench Wildland Urban Interface (WUI) areas are approximately 5 miles east of the project planning area, and are identified in the Wallowa County Community Wildfire Protection Plan (CWPP). A portion (approximately 7,700 acres) of the Grande Ronde inventoried roadless area (IRA) is within the project planning area.

Purpose and Need for Action—The purpose and need for action in this project is to improve health, vigor, and resilience to fire, insects, and disease in upland forests that are outside their historical pre-fire suppression conditions for species composition, structural diversity, stocking densities, and fuel loads. Additionally, there is a need to provide sawlogs and wood fiber products for utilization by regional and local industry.

Forest stands in the project planning area have been altered from historical conditions due to fire suppression and past forest management practices. A majority of current forest stands originated as a result of fire disturbances occurring over one hundred years ago, and they have not experienced fire since then. There have been repeated insect defoliation episodes followed by salvage harvest. Lodgepole pine stands have been harvested, and the remaining mature stands in the project planning area are at the age to be highly susceptible to mountain pine beetle, which is currently experiencing an increasing population. Late seral tree species have become dominant after long periods without disturbance and generally are more susceptible to disturbance-caused mortality than early seral species. Forest stands have become overstocked and are above recommended stocking levels that would maintain stand growth and vigor. Timber stands of seral tree species such as western larch and ponderosa pine are infilling with grand fir.

Findings from the historical range of variability (HRV) analysis for Eastside Screens show that old forest structure is within historical range for moist forest biophysical group, but outside of historical range for dry forest biophysical group in old forest single stratum (OFSS) structural stage.

Proposed Action—Following are brief descriptions of activities proposed for implementation, along with associated activities that would occur concurrently.

Timber Harvest—Commercially harvest approximately 2,500 acres. In some treatment units timber harvest would include the removal of sawlogs and small diameter trees in the 3–9 inch diameter at breast height (DBH) range which would be used as a woody biomass product. In some treatment units only biomass products would be removed with incidental removal of sawlogs. Commercial thinning is the primary silviculture prescription with some shelterwood and seed-tree prescriptions used in decadent stands where thinning would not restore growth or vigor. Harvest objectives would vary by stand condition and fuel management objectives. Treatments would tend to favor early seral tree species such as ponderosa pine and western larch. Harvest methods would include conventional ground based (approximately 380 acres) logging, using a harvester/forwarder (approximately 1,830 acres), and skyline logging (approximately 230 acres).

Fuel Treatments (activity and natural)—Activity fuels and existing natural fuels would be treated in harvest units. Treatments would include mechanical mastication, grapple piling, hand piling, jackpot burning, and yarding with tops attached depending on slash loads and the amount of fire sensitive species remaining after harvest. Mastication would be used to treat both activity fuels and remaining ladder fuels when small diameter understory is removed for woody biomass products (3–9 inch DBH) and a high density of understory trees still remains. Hand piling would be used in portions of units where visual quality is a concern, mainly along Forest Road (FR) 62.

Road Management—To accomplish implementation of proposed activities, approximately 50 miles of open system roads, about 40 miles of closed system roads, and 1.5 miles of seasonally open roads would be used as haul routes. Of

the open system roads approximately 14 miles are outside of the project planning area and represent haul routes to county roads. Closed system roads used for project activities would not be opened to the public. All system roads would remain the same after project implementation; open roads would remain opened, closed roads would continue to be closed, and seasonally open roads would continue with that designation. Approximately 0.25 miles of new road construction would occur to access an activity unit and be used for future access for vegetation and fuels treatments. This new construction would become a closed system road after project use. Approximately 0.20 miles of temporary road construction would occur and would be decommissioned after project activity use. Normal routine road maintenance would occur.

Danger Tree Removal—Danger trees would be felled and removed along all previously described haul routes used for timber sale activity. If considered economically feasible, they would be sold as part of a timber sale. Danger trees within Riparian Habitat Conservation Areas (RHCAs) would not be removed; they would be cut and left to provide additional coarse woody debris.

Landscape Prescribed Fire—Landscape prescribed fire would occur across approximately 8,000 acres within the Grande Ronde River canyon. No timber harvest or mechanical fuel treatments would occur in these canyons. This treatment would reintroduce fire to a fire-dependent ecosystem blackening about 60 percent of the area to lessen the impact of a future uncharacteristic wildfire and improve forage quality for big game. In the majority of the project area, fire intensities would be kept low by keeping fire out of the overstory and burning mainly surface fuels. This activity would occur in almost all of the acres of the Grande Ronde inventoried roadless area (IRA) that are within the project planning area.

Hardwood Restoration—Twenty-three hardwood sites (aspen, black cottonwood, and mountain mahogany) totaling about 115 acres are proposed for treatment that includes release from conifers and fencing of these sites. Reduction of conifer competition in some aspen stands would be achieved by girdling trees or cutting and leaving the trees on site. Most of these stands have only mature or over-mature hardwood trees with little or no regeneration, or regeneration that is being severely browsed. Fencing would occur at these 23 hardwood sites.

Meadow Restoration—An estimated 275 acres of dry meadows would be treated to reduce conifer encroachment. Trees less than or equal to 6 inches DBH would be cut by hand followed by a prescribed underburn through the grass.

Non-commercial Thinning—This activity would cut excess trees that are less than 6 inches DBH on approximately 1,900 acres. Some units may have special conditions where trees up to 9 inches DBH would be cut. Either manual or mechanical methods would be use.

Forest Plan Amendment—In order to manage aspen stands in the project planning area, the Forest Plan would be amended to reallocate acres in management area allocations of D2–Research Natural Area, E2–Timber and Big Game, and A9–Special Interest Area. Elk Flats Meadow (D2), which is currently a proposed candidate for designation as a Research Natural Area (RNA), would be reallocated to management area A9–Special Interest Area in order to allow vegetation management, including cutting of trees, to maintain or enhance existing aspen and encourage aspen regeneration. In summary, approximately 70 acres of management area D2 (Elk Flats Meadow) would become management area A9; approximately 30 acres of management area E2 would become management area A9, and approximately 10 acres of management area D2 would become management area E2. This amendment would remain in effect until the current Forest Plan is revised.

Possible Alternatives—An alternative that would have fewer impacts on elk cover and/or old forest habitat was identified for this project. Commercial harvest would occur on approximately 1,300 acres using the same silviculture prescriptions and harvest methods. No timber harvest would occur in old forest stands or in areas of satisfactory cover. All other activities would remain the same but would occur on fewer acres. Another alternative identified would be to take no action at this time in the project planning area.

Responsible Official

Kevin Martin, Forest Supervisor, Umatilla National Forest, 2517 S.W. Hailey Avenue, Pendleton, Oregon 97801.

Nature of Decision To Be Made

The decision to be made is whether to approve the proposed action or any alternative way to achieve the desired outcome. A Forest Plan amendment is proposed.

Scoping Process

This notice of intent initiates the development of an EIS for the Cobbler II project and seeks any additional scoping comments not previously submitted. The comment period begins on the date of publication of this notice of intent and ends on February 26, 2010. It is important that reviewers provide their comments at such times and in such a manner that they are useful to the agency's preparation of the environmental impact statement. Therefore, comments should be provided prior to the close of the comment period and should clearly articulate the reviewer's concerns and comments. The submission of timely and specific comments can affect a reviewer's ability to participate in subsequent administrative appeal or judicial review.

Comments received in response to this solicitation, including names and addresses of those who comment will be part of the public record for this proposed action. Comments submitted anonymously will be accepted and considered; however, anonymous comments will not provide the respondent with standing to participate in subsequent administrative appeal or judicial review.

Dated: February 1, 2010.

Kevin Martin,

Forest Supervisor.

[FR Doc. 2010–2505 Filed 2–4–10; 8:45 am]

BILLING CODE 3410–11–P

COMMISSION ON CIVIL RIGHTS

Agenda and Notice of Public Meeting of the Utah Advisory Committee

Notice is hereby given, pursuant to the provisions of the rules and regulations of the U.S. Commission on Civil Rights and the regulations of the Federal Advisory Committee Act (FACA), that a meeting of the Utah Advisory Committee will convene at 5:30 p.m. and adjourn at 8 p.m. (MST) on Thursday, February 25, 2010 at the 451 South State Street, Salt Lake City, UT 84111. The purpose of the meeting is for the committee to discuss recent Commission and regional activities, discuss current civil rights issues in the state and plan future activities. The Committee will also be briefed on education issues affecting minority students as it prepares to select a project topic.

Members of the public are entitled to submit written comments; the comments must be received in the regional office by March 25, 2010. The

address is Rocky Mountain Regional Office, 1961 Stout Street, Suite 240, Denver, CO 80294. Persons wishing to e-mail their comments, or who desire additional information should contact Malee Craft, Regional Director, at 303–866–1040 or by e-mail to: *mcraft@usccr.gov.*

Hearing-impaired persons who will attend the meeting and require the services of a sign language interpreter should contact the Regional Office at least ten (10) working days before the scheduled date of the meeting.

The meeting will be conducted pursuant to the provisions of the rules and regulations of the Commission and FACA.

Dated in Washington, DC, February 2, 2010.

Peter Minarik,

Acting Chief, Regional Programs Coordination Unit.

[FR Doc. 2010–2525 Filed 2–4–10; 8:45 am]

BILLING CODE 6335–01–P

COMMISSION ON CIVIL RIGHTS

Agenda and Notice of Public Meeting of the Wyoming Advisory Committee

Notice is hereby given, pursuant to the provisions of the rules and regulations of the U.S. Commission on Civil Rights (Commission), and the regulations of the Federal Advisory Committee Act (FACA), that a meeting of the Wyoming Advisory Committee will convene at 10 a.m. and adjourn at 12 p.m. (MST) on Saturday, February 27, 2010, at Holland Hart LLP, 2515 Warren Avenue, Suite 450, Cheyenne, WY 82003.

The purpose of the meeting is to brief the committee on civil rights issues and the state of civil rights in Wyoming. Briefings will be conducted by a professor in the education department of the University of Wyoming and the president of the NAACP–Cheyenne Chapter. The committee will discuss recent Commission and regional activities, and plan future activities.

Members of the public are entitled to submit written comments; the comments must be received in the Rocky Mountain Regional Office by March 27, 2010. The address is 1961 Stout Street, Suite 240, Denver, CO 80294. Persons wishing to email their comments, or to present their comments verbally at the meeting, or who desire additional information should contact the regional office at (303) 866–1040 or *ebohor@usccr.gov.*

Hearing-impaired persons who will attend the meeting and require the services of a sign language interpreter should contact the Regional Office at least ten (10) working days before the scheduled date of the meeting.

Records generated from this meeting may be inspected and reproduced at the Rocky Mountain Regional Office, as they become available, both before and after the meeting. Persons interested in the work of this advisory committee are advised to go to the Commission's Web site, *http://www.usccr.gov,* or to contact the Rocky Mountain Regional Office at the above email or street address.

The meeting will be conducted pursuant to the provisions of the rules and regulations of the Commission and FACA.

Dated at Washington, DC, February 2, 2010.

Peter Minarik,

Acting Chief, Regional Programs Coordination Unit.

[FR Doc. 2010–2526 Filed 2–4–10; 8:45 am]

BILLING CODE 6335–02–P

DEPARTMENT OF COMMERCE

Submission for OMB Review; Comment Request

The Department of Commerce will submit to the Office of Management and Budget (OMB) for clearance the following proposal for collection of information under the provisions of the Paperwork Reduction Act (44 U.S.C. Chapter 35).

Agency: International Trade Administration.

Title: Procedures for Importation of Supplies for Use in Emergency Relief Work.

Form Number(s): N/A.

OMB Control Number: 0625–0256.

Type of Request: Regular submission.

Burden Hours: 10.

Number of Respondents: 5.

Average Hours per Response: 2.

Needs and Uses: The regulations (19 CFR 358.101–104) provide procedures for requesting the Secretary of Commerce to permit the importation of supplies, such as food, clothing, medical, surgical, and other supplies (such as building materials), for use in emergency relief work free of antidumping and countervailing duties.

Affected Public: Business or other for-profit organizations.

Frequency: On occasion.

Respondent's Obligation: Voluntary.

OMB Desk Officer: Wendy Liberante, (202) 395–3647.

Copies of the above information collection proposal can be obtained by calling or writing Diana Hynek, Departmental Paperwork Clearance Officer, (202) 482–0266, Department of Commerce, Room 6625, 14th and Constitution Avenue, NW., Washington, DC 20230 (or via the Internet at *dHynek@doc.gov.*

Written comments and recommendations for the proposed information collection should be sent within 30 days of publication of this notice to Wendy Liberante, OMB Desk Officer, Fax number (202) 395–5167 or via the Internet at *Wendy_L._Liberante@omb.eop.gov.*

Dated: February 2, 2010.

Gwellnar Banks,

Management Analyst, Office of the Chief Information Officer.

[FR Doc. 2010–2512 Filed 2–4–10; 8:45 am]

BILLING CODE 3510–DS–P

DEPARTMENT OF COMMERCE

Submission for OMB Review; Comment Request

The Department of Commerce will submit to the Office of Management and Budget (OMB) for clearance the following proposal for collection of information under the provisions of the Paperwork Reduction Act (44 U.S.C. Chapter 35).

Agency: National Institute of Standards and Technology (NIST).

Title: Malcolm Baldrige National Quality Award and Examiner Applications.

OMB Control Number: 0693–0006.

Form Number(s): None.

Type of Request: Regular submission.

Number of Respondents: 900 (100—Awards; 800—Examiners).

Average Hours per Response: Award application, 74 hours; Examiner Application, 1 hour.

Burden Hours: 8,200.

Needs and Uses: Public Law 100–107, the Malcolm Baldrige Quality Improvement Act of 1987, established an annual U.S. National Quality Award. The Secretary of Commerce leads, and NIST develops and manages the Award in corporation with the private sector. The purposes of the Award are to promote competitiveness and quality awareness, recognize the performance achievements of the U.S. companies, and to share successful strategies and practices. The law explicitly states that "An origination may qualify for an award only if it permits a rigorous evaluation of the way in which its business and other operations have contributed to improvements in quality." The collection of the information required of the Award and Examiner applicants make it possible for NIST to evaluate the applications,

grant the Awards, select Examiners, and comply with statutory responsibilities.

Affected Public: Business or other for-profit organizations; not-for-profit institutions; government entities. Individuals with expertise in the business, education, health care, and/or nonprofit fields are eligible to apply as a member to the Board of Examiners.

Frequency: Annually.

Respondent's Obligation: Voluntary.

OMB Desk Officer: Jasmeet Seehra, (202) 395–3123.

Copies of the above information collection proposal can be obtained by calling or writing Diana Hynek, Departmental Paperwork Clearance Officer, (202) 482–0266, Department of Commerce, Room 6625, 14th and Constitution Avenue, NW., Washington, DC 20230 (or via the Internet at *dHynek@doc.gov*).

Written comments and recommendations for the proposed information collection should be sent within 30 days of publication of this notice to Jasmeet Seehra, OMB Desk Officer, FAX number (202) 395–5167 or via the Internet at *Jasmeet_K_Seehra@omb.eop.gov.*

Dated: February 2, 2010.

Gwellnar Banks,

Management Analyst, Office of the Chief Information Officer.

[FR Doc. 2010–2513 Filed 2–4–10; 8:45 am]

BILLING CODE 3510–13–P

DEPARTMENT OF COMMERCE

National Oceanic and Atmospheric Administration

Proposed Information Collection; Comment Request; Pacific Coast Groundfish, Rationalization Sociocultural Study

AGENCY: National Oceanic and Atmospheric Administration (NOAA), Commerce.

ACTION: Notice.

SUMMARY: The Department of Commerce, as part of its continuing effort to reduce paperwork and respondent burden, invites the general public and other Federal agencies to take this opportunity to comment on proposed and/or continuing information collections, as required by the Paperwork Reduction Act of 1995.

DATES: Written comments must be submitted on or before April 6, 2010.

ADDRESSES: Direct all written comments to Diana Hynek, Departmental Paperwork Clearance Officer, Department of Commerce, Room 6625, 14th and Constitution Avenue, NW., Washington, DC 20230 (or via the Internet at *dHynek@doc.gov).*

FOR FURTHER INFORMATION CONTACT: Requests for additional information or copies of the information collection instrument and instructions should be directed to Suzanne Russell (206) 860–3274, *suzanne.russell@noaa.gov.*

SUPPLEMENTARY INFORMATION:

I. Abstract

Historically, changes in fisheries management regulations have been shown to result in impacts to individuals within the fishery. An understanding of social impacts in fisheries—achieved through the collection of data on fishing communities, as well as on individuals who fish—is a requirement under several federal laws. Laws such as the National Environmental Protection Act and the Magnuson Stevens Fishery Conservation Act (as amended 2007) describe such requirements. The collection of this data not only helps to inform legal requirements for the existing management actions, but will inform future management actions requiring equivalent information.

Fisheries rationalization programs have an impact on those individuals participating in the affected fishery. The Pacific Fisheries Management Council is on track to implement a new rationalization program for the Pacific Coast Groundfish limited entry trawl fishery in January 2011. This research aims to study the individuals in the affected fishery both prior to and after the implementation of the rationalization program. The data collected will provide a baseline description of the industry as well as allow for analysis of changes the rationalization program may create for individuals in the fishery. The measurement of these changes will lead to a greater understanding of the social impacts the management measure may have on the individuals in the fishery. To achieve these goals it is critical to collect the necessary data prior to the implementation of the rationalization program for comparison to data collected after the management program has been implemented. This study will be inclusive of both a Phase 1 pre-implementation data collection effort, as well as a Phase 2, post-implementation data collection effort to achieve the stated objectives.

II. Method of Collection

Literature reviews, secondary sources including Internet sources, United States Census data, key informants, focus groups, paper surveys, electronic surveys, and in-person interviews will be utilized in combination to obtain the greatest breadth of information as possible.

III. Data

OMB Control Number: None.

Form Number: None.

Type of Review: Regular submission.

Affected Public: Individuals or households; business or other for-profit organizations; not-for-profit institutions.

Estimated Number of Respondents: 800.

Estimated Time per Response: 1 hour 30 minutes.

Estimated Total Annual Burden Hours: 1,200.

Estimated Total Annual Cost to Public: $1,000 in recordkeeping/reporting costs.

IV. Request for Comments

Comments are invited on: (a) Whether the proposed collection of information is necessary for the proper performance of the functions of the agency, including whether the information shall have practical utility; (b) the accuracy of the agency's estimate of the burden (including hours and cost) of the proposed collection of information; (c) ways to enhance the quality, utility, and clarity of the information to be collected; and (d) ways to minimize the burden of the collection of information on respondents, including through the use of automated collection techniques or other forms of information technology.

Comments submitted in response to this notice will be summarized and/or included in the request for OMB approval of this information collection; they also will become a matter of public record.

Dated: February 2, 2010.

Gwellnar Banks,

Management Analyst, Office of the Chief Information Officer.

[FR Doc. 2010–2504 Filed 2–4–10; 8:45 am]

BILLING CODE 3510–22–P

DEPARTMENT OF COMMERCE

National Oceanic and Atmospheric Administration

Proposed Information Collection; Comment Request; Alaska Cooperatives in the Bering Sea and Aleutian Islands

AGENCY: National Oceanic and Atmospheric Administration (NOAA), Commerce.

ACTION: Notice.

SUMMARY: The Department of Commerce, as part of its continuing effort to reduce paperwork and respondent burden, invites the general public and other Federal agencies to take this opportunity to comment on proposed and/or continuing information collections, as required by the Paperwork Reduction Act of 1995.

DATES: Written comments must be submitted on or before April 6, 2010.

ADDRESSES: Direct all written comments to Diana Hynek, Departmental Paperwork Clearance Officer, Department of Commerce, Room 6625, 14th and Constitution Avenue, NW., Washington, DC 20230 (or via the Internet at *dHynek@doc.gov).*

FOR FURTHER INFORMATION CONTACT: Requests for additional information or copies of the information collection instrument and instructions should be directed to Patsy A. Bearden, at (907) 586–7008 or *patsy.bearden@noaa.gov*.

SUPPLEMENTARY INFORMATION:

I. Abstract

The American Fisheries Act (AFA) was signed into law in October of 1998. The AFA established an allocation program for the pollock fishery of the Bering Sea and Aleutian Islands Management Area (BSAI). The AFA established a limited access program for the inshore sector of the BSAI pollock fishery that is based on the formation of fishery cooperatives around each inshore pollock processor. Implementing regulations are found at 50 CFR part 679, subpart F.

The original purposes of the AFA were to tighten United States ownership standards that had been exploited under the Anti-reflagging Act, to provide Alaska's BSAI pollock fleet the opportunity to conduct their fishery in a more rational manner, and to protect non-AFA participants in other fisheries. In addition, a voluntary civil agreement among pollock cooperatives, Western Alaska Community Development Quota (CDQ) groups, and western Alaska subsistence salmon user groups is intended to coordinate the pollock fishery in a manner that reduces incidental catch rates of salmon.

Reduced bycatch, higher utilization rates, increased economic returns, and improved safety are among the direct benefits of the AFA. The flexibility provided by cooperatives and by individual vessel allocations of pollock and other species has allowed the BSAI pollock fleet to spread their fishing effort in time and space. The cooperative management structure has shifted more of the monitoring and enforcement burden to the cooperatives and their members, allowing NMFS to manage the fishery more precisely. The AFA cooperative annual reports are required to provide information about how the cooperative allocated pollock, other groundfish species, and prohibited species among the vessels in the cooperative; the catch of these species by area for each vessel in the cooperative; information about how the cooperative monitored fishing by its members; and a description of any actions taken by the cooperative to penalize vessels that exceeded the catch and bycatch allocations made to the vessel by the cooperative.

II. Method of Collection

For those items not connected with a scale, respondents have a choice of either electronic or paper forms. Methods of submittal include e-mail of electronic forms, and mail and facsimile transmission of paper forms.

III. Data

OMB Control Number: 0648–0401.

Form Number: None.

Type of Review: Regular submission.

Affected Public: Individuals or households; business or other for-profit organizations.

Estimated Number of Respondents: 11.

Estimated Time per Response: 12 hours for AFA Annual Report; 30 minutes for Nonmember vessel contract fishing application; 5 minutes for Inshore catcher vessel cooperative pollock catch report; 5 minutes for Agent for service of process; 40 hours for Salmon Bycatch Reduction Inter-Cooperative Agreement (ICA); and 4 hours for ICA appeals.

Estimated Total Annual Burden Hours: 470.

Estimated Total Annual Cost to Public: $225.

IV. Request for Comments

Comments are invited on: (a) Whether the proposed collection of information is necessary for the proper performance of the functions of the agency, including whether the information shall have practical utility; (b) the accuracy of the agency's estimate of the burden (including hours and cost) of the proposed collection of information; (c) ways to enhance the quality, utility, and clarity of the information to be collected; and (d) ways to minimize the burden of the collection of information on respondents, including through the use of automated collection techniques or other forms of information technology.

Comments submitted in response to this notice will be summarized and/or included in the request for OMB approval of this information collection; they also will become a matter of public record.

Dated: February 2, 2010.

Gwellnar Banks,

Management Analyst, Office of the Chief Information Officer.

[FR Doc. 2010–2503 Filed 2–4–10; 8:45 am]

BILLING CODE 3510–22–P

DEPARTMENT OF COMMERCE

International Trade Administration

[A–570–908]

First Antidumping Duty Administrative Review of Sodium Hexametaphosphate from the People's Republic of China: Extension of Time Limit for the Preliminary Results

AGENCY: Import Administration, International Trade Administration, Department of Commerce.

EFFECTIVE DATE: February 5, 2010.

FOR FURTHER INFORMATION CONTACT: Paul Walker, AD/CVD Operations, Office 9, Import Administration, International Trade Administration, U.S. Department of Commerce, 14th Street and Constitution Avenue, NW, Washington, DC 20230; telephone: (202) 482–0413.

SUPPLEMENTARY INFORMATION:

Background

On April 27, 2009, the Department of Commerce ("Department") published in the **Federal Register** a notice of initiation of an administrative review of sodium hexametaphosphate from the People's Republic of China ("PRC"), covering the period September 14, 2007 February 28, 2009. *See Initiation of Antidumping and Countervailing Duty Administrative Reviews and Request for Revocation in Part*, 74 FR 19042 (April 27, 2009). From May 26, 2009 to October 28, 2009, the respondent in this review, Hubei Xingfa Chemical Group Co., Ltd. ("Hubei Xingfa"), submitted responses to the Department's antidumping duty questionnaires. From November 9–13, 2009, the Department conducted verification of Hubei Xingfa. On November 25, 2009, the Department extended the time period for issuing the preliminary results of review until January 30, 2010. *See First Antidumping Duty Administrative Review of Sodium Hexametaphosphate from the People's Republic of China: Extension of Time Limit for the Preliminary Results*, 74 FR 61656 (November 25, 2009).

Extension of Time Limit for the Preliminary Results

Section 751(a)(3)(A) of the Tariff Act of 1930, as amended ("the Act"), requires the Department to issue the preliminary results of an administrative review within 245 days after the last day of the anniversary month of an order for which a review is requested. If it is not practicable to complete the review within the time period, section 751(a)(3)(A) of the Act allows the Department to extend this deadline to a maximum of 365 days.

The Department determines that completion of the preliminary results of this review within the statutory time period is not practicable, given the extraordinarily complicated nature of the proceeding. The Department requires additional time to analyze the information gathered at verification concerning Hubei Xingfa's corporate structure and ownership, sales practices, manufacturing methods, and to issue the verification report. Therefore, given the number and complexity of issues in this case, and in accordance with section 751(a)(3)(A) of the Act, we are extending the time period for issuing the preliminary results of review by 41 days until March 12, 2010. The final results continue to be due 120 days after the publication of the preliminary results.

This notice is published pursuant to sections 751(a)(3)(A) and 777(i)(1) of the Act and 19 CFR 351.213(h)(2).

Dated: January 26, 2010.

John M. Andersen.

Acting Deputy Assistant Secretary for Antidumping and Countervailing Duty Operations.

[FR Doc. 2010–2589 Filed 2–4–10; 8:45 am]

BILLING CODE 3510–DS–S

DEPARTMENT OF COMMERCE

International Trade Administration

[A–583–831]

Stainless Steel Sheet and Strip in Coils from Taiwan: Final Results and Rescission in Part of Antidumping Duty Administrative Review

AGENCY: Import Administration, International Trade Administration, Department of Commerce.

SUMMARY: On August 5, 2009, the Department of Commerce (the Department) published the preliminary results of the administrative review of the antidumping duty order on stainless steel sheet and strip in coils (SSSSC) from Taiwan. This review covers one producer/exporter of the subject merchandise to the United States. The period of review (POR) is July 1, 2007, through June 30, 2008. We are rescinding the review with respect to two companies because these companies had no shipments of subject merchandise during the POR.

Based on our analysis of the comments received, we have made no changes in the margin calculation. Therefore, the final results do not differ from the preliminary results. The final weighted–average dumping margin for the reviewed firm is listed below in the section entitled "Final Results of Review."

EFFECTIVE DATE: February 5, 2010.

FOR FURTHER INFORMATION CONTACT: Henry Almond, AD/CVD Operations, Office 2, Import Administration, International Trade Administration, U.S. Department of Commerce, 14th Street and Constitution Avenue, NW, Washington, DC, 20230; telephone (202) 482–0049.

SUPPLEMENTARY INFORMATION:

Background

This review covers three producers/exporters: Chia Far Industrial Factory Co., Ltd. (Chia Far), Yieh United Steel Corporation (YUSCO), and Ta Chen Stainless Pipe Co., Ltd. (Ta Chen). Chia Far is the only company participating in this review, and we are rescinding the review with respect to YUSCO and Ta Chen.

On August 5, 2009, the Department published in the **Federal Register** the preliminary results of administrative review of the antidumping duty order on SSSSC from Taiwan. *See Stainless Steel Sheet and Strip in Coils from Taiwan: Preliminary Results and Preliminary Rescission in Part of Antidumping Duty Administrative Review*, 74 FR 39055 (Aug. 5, 2009) (*Preliminary Results*).

We invited parties to comment on our preliminary results of review. In September 2008, we received a case brief from the petitioners[1] and a rebuttal brief from Ta Chen. At the request of the petitioners, we held a hearing on September 29, 2009. On November 23, 2009, we postponed the deadline for the final results under section 751(a)(3)(A) the Tariff Act of 1930, as amended (the Act). *See Stainless Steel Sheet and Strip in Coils From Taiwan: Notice of Extension of Time Limit for the Final Results of the 2007–2008 Administrative Review*, 74 FR 61107 (Nov. 23, 2009).

The Department has conducted this administrative review in accordance with section 751 of the Act.

Scope of the Order

The products covered by the order are certain stainless steel sheet and strip in coils. Stainless steel is an alloy steel containing, by weight, 1.2 percent or less of carbon and 10.5 percent or more of chromium, with or without other elements. The subject sheet and strip is a flat–rolled product in coils that is greater than 9.5 mm in width and less than 4.75 mm in thickness, and that is annealed or otherwise heat treated and pickled or otherwise descaled. The subject sheet and strip may also be further processed (*e.g.*, cold–rolled, polished, aluminized, coated, *etc.*) provided that it maintains the specific dimensions of sheet and strip following such processing.

The merchandise subject to the order is classified in the Harmonized Tariff Schedule of the United States (HTSUS) at subheadings: 7219.13.00.31, 7219.13.00.51, 7219.13.00.71, 7219.13.00.81, 7219.14.00.30, 7219.14.00.65, 7219.14.00.90, 7219.32.00.05, 7219.32.00.20, 7219.32.00.25, 7219.32.00.35, 7219.32.00.36, 7219.32.00.38, 7219.32.00.42, 7219.32.00.44, 7219.33.00.05, 7219.33.00.20, 7219.33.00.25, 7219.33.00.35, 7219.33.00.36, 7219.33.00.38, 7219.33.00.42, 7219.33.00.44, 7219.34.00.05, 7219.34.00.20, 7219.34.00.25, 7219.34.00.30, 7219.34.00.35, 7219.35.00.05, 7219.35.00.15, 7219.35.00.30, 7219.35.00.35, 7219.90.00.10, 7219.90.00.20, 7219.90.00.25, 7219.90.00.60, 7219.90.00.80, 7220.12.10.00, 7220.12.50.00, 7220.20.10.10, 7220.20.10.15, 7220.20.10.60, 7220.20.10.80, 7220.20.60.05, 7220.20.60.10, 7220.20.60.15, 7220.20.60.60, 7220.20.60.80, 7220.20.70.05, 7220.20.70.10, 7220.20.70.15, 7220.20.70.60, 7220.20.70.80, 7220.20.80.00, 7220.20.90.30, 7220.20.90.60, 7220.90.00.10, 7220.90.00.15, 7220.90.00.60, and 7220.90.00.80. Although the HTSUS subheadings are provided for convenience and customs purposes, the Department's written description of the merchandise under the order is dispositive.

Excluded from the scope of the order are the following: 1) sheet and strip that is not annealed or otherwise heat treated and pickled or otherwise descaled, 2) sheet and strip that is cut to length, 3)

[1] The petitioners are Allegheny Ludlum Corporation, AK Steel Corporation, United Auto Workers Local 3303, United Steelworkers of America, AFL-CIO/CLC, and Zanesville Armco Independent Organization.

plate (*i.e.*, flat–rolled stainless steel products of a thickness of 4.75 mm or more), 4) flat wire (*i.e.*, cold–rolled sections, with a prepared edge, rectangular in shape, of a width of not more than 9.5 mm), and 5) razor blade steel. Razor blade steel is a flat–rolled product of stainless steel, not further worked than cold–rolled (cold–reduced), in coils, of a width of not more than 23 mm and a thickness of 0.266 mm or less, containing, by weight, 12.5 to 14.5 percent chromium, and certified at the time of entry to be used in the manufacture of razor blades. *See* Chapter 72 of the HTSUS, "Additional U.S. Note" 1(d).

Also excluded from the scope of the order are certain specialty stainless steel products described below. Flapper valve steel is defined as stainless steel strip in coils containing, by weight, between 0.37 and 0.43 percent carbon, between 1.15 and 1.35 percent molybdenum, and between 0.20 and 0.80 percent manganese. This steel also contains, by weight, phosphorus of 0.025 percent or less, silicon of between 0.20 and 0.50 percent, and sulfur of 0.020 percent or less. The product is manufactured by means of vacuum arc remelting, with inclusion controls for sulphide of no more than 0.04 percent and for oxide of no more than 0.05 percent. Flapper valve steel has a tensile strength of between 210 and 300 ksi, yield strength of between 170 and 270 ksi, plus or minus 8 ksi, and a hardness (Hv) of between 460 and 590. Flapper valve steel is most commonly used to produce specialty flapper valves in compressors.

Also excluded is a product referred to as suspension foil, a specialty steel product used in the manufacture of suspension assemblies for computer disk drives. Suspension foil is described as 302/304 grade or 202 grade stainless steel of a thickness between 14 and 127 microns, with a thickness tolerance of plus–or-minus 2.01 microns, and surface glossiness of 200 to 700 percent Gs. Suspension foil must be supplied in coil widths of not more than 407 mm, and with a mass of 225 kg or less. Roll marks may only be visible on one side, with no scratches of measurable depth. The material must exhibit residual stresses of 2 mm maximum deflection, and flatness of 1.6 mm over 685 mm length.

Certain stainless steel foil for automotive catalytic converters is also excluded from the scope of the order. This stainless steel strip in coils is a specialty foil with a thickness of between 20 and 110 microns used to produce a metallic substrate with a honeycomb structure for use in automotive catalytic converters. The steel contains, by weight, carbon of no more than 0.030 percent, silicon of no more than 1.0 percent, manganese of no more than 1.0 percent, chromium of between 19 and 22 percent, aluminum of no less than 5.0 percent, phosphorus of no more than 0.045 percent, sulfur of no more than 0.03 percent, lanthanum of less than 0.002 or greater than 0.05 percent, and total rare earth elements of more than 0.06 percent, with the balance iron.

Permanent magnet iron–chromium-cobalt alloy stainless strip is also excluded from the scope of the order. This ductile stainless steel strip contains, by weight, 26 to 30 percent chromium, and 7 to 10 percent cobalt, with the remainder of iron, in widths 228.6 mm or less, and a thickness between 0.127 and 1.270 mm. It exhibits magnetic remanence between 9,000 and 12,000 gauss, and a coercivity of between 50 and 300 oersteds. This product is most commonly used in electronic sensors and is currently available under proprietary trade names such as Arnokrome III.[2]

Certain electrical resistance alloy steel is also excluded from the scope of the order. This product is defined as a non–magnetic stainless steel manufactured to American Society of Testing and Materials specification B344 and containing, by weight, 36 percent nickel, 18 percent chromium, and 46 percent iron, and is most notable for its resistance to high temperature corrosion. It has a melting point of 1390 degrees Celsius and displays a creep rupture limit of 4 kilograms per square millimeter at 1000 degrees Celsius. This steel is most commonly used in the production of heating ribbons for circuit breakers and industrial furnaces, and in rheostats for railway locomotives. The product is currently available under proprietary trade names such as Gilphy 36.[3]

Certain martensitic precipitation–hardenable stainless steel is also excluded from the scope of the order. This high–strength, ductile stainless steel product is designated under the Unified Numbering System as S45500–grade steel, and contains, by weight, 11 to 13 percent chromium, and 7 to 10 percent nickel. Carbon, manganese, silicon and molybdenum each comprise, by weight, 0.05 percent or less, with phosphorus and sulfur each comprising, by weight, 0.03 percent or less. This steel has copper, niobium, and titanium added to achieve aging, and will exhibit yield strengths as high as 1700 Mpa and ultimate tensile strengths as high as 1750 Mpa after aging, with elongation percentages of 3 percent or less in 50 mm. It is generally provided in thicknesses between 0.635 and 0.787 mm, and in widths of 25.4 mm. This product is most commonly used in the manufacture of television tubes and is currently available under proprietary trade names such as Durphynox 17.[4]

Finally, three specialty stainless steels typically used in certain industrial blades and surgical and medical instruments are also excluded from the scope of the order. These include stainless steel strip in coils used in the production of textile cutting tools (*e.g.*, carpet knives).[5] This steel is similar to AISI grade 420 but containing, by weight, 0.5 to 0.7 percent of molybdenum. The steel also contains, by weight, carbon of between 1.0 and 1.1 percent, sulfur of 0.020 percent or less, and includes between 0.20 and 0.30 percent copper and between 0.20 and 0.50 percent cobalt. This steel is sold under proprietary names such as GIN4 Mo. The second excluded stainless steel strip in coils is similar to AISI 420–J2 and contains, by weight, carbon of between 0.62 and 0.70 percent, silicon of between 0.20 and 0.50 percent, manganese of between 0.45 and 0.80 percent, phosphorus of no more than 0.025 percent and sulfur of no more than 0.020 percent. This steel has a carbide density on average of 100 carbide particles per 100 square microns. An example of this product is GIN5 steel. The third specialty steel has a chemical composition similar to AISI 420 F, with carbon of between 0.37 and 0.43 percent, molybdenum of between 1.15 and 1.35 percent, but lower manganese of between 0.20 and 0.80 percent, phosphorus of no more than 0.025 percent, silicon of between 0.20 and 0.50 percent, and sulfur of no more than 0.020 percent. This product is supplied with a hardness of more than Hv 500 guaranteed after customer processing, and is supplied as, for example, GIN6.[6]

Period of Review

The POR is July 1, 2007, through June 30, 2008.

Partial Rescission of Review

As noted in the "Background" section above, we are rescinding the review with respect to two respondents, Ta Chen and YUSCO. As noted in the *Preliminary Results*, both Ta Chen and

[2] Arnokrome III is a trademark of the Arnold Engineering Company.

[3] Gilphy 36 is a trademark of Imphy, S.A.

[4] Durphynox 17 is a trademark of Imphy, S.A.

[5] This list of uses is illustrated and provided for descriptive purposes only.

[6] GIN4 Mo, GIN5 and GIN6 are the proprietary grades of Hitachi Metals America, Ltd.

YUSCO certified to the Department that they had no shipments/entries of subject merchandise into the United States during the POR. The Department subsequently confirmed with U.S. Customs and Border Protection (CBP) the no–shipment claim made by YUSCO. *See* the November 13, 2008, Memorandum to the File from Henry Almond, Analyst, entitled, "2007–2008 Administrative Review of Stainless Steel Sheet and Strips in Coils from Taiwan: Entry Information from U.S. Customs and Border Protection (CBP)." *See also Preliminary Results*, 74 FR at 39057.

Since the preliminary results, no party to this proceeding has commented on our preliminary rescission for YUSCO. As a result, we are rescinding the review with respect to this company, in accordance with 19 CFR 351.213(d)(3) and the Department's practice. *See, e.g., Chia Far Indus. Factory Co., Ltd. v. United States*, 343 F. Supp. 2d 1344, 1374 (2004); *Certain Steel Concrete Reinforcing Bars From Turkey; Final Results, Rescission of Antidumping Duty Administrative Review in Part, and Determination To Revoke in Part*, 70 FR 67665, 67666 (Nov. 8, 2005); and *Notice of Final Results and Partial Rescission of Antidumping Duty Administrative Review: Certain Welded Carbon Steel Pipe and Tube from Turkey*, 63 FR 35190, 35191 (June 29, 1998).

Regarding Ta Chen, this company also indicated that it had no shipments; however its U.S. affiliate imported SSSSC from Taiwan manufactured and exported by Tung Mung Development Co. (Tung Mung), whose SSSSC is excluded from the antidumping duty order. Subsequently, the petitioners alleged that such shipments should be subject to a middleman dumping inquiry. As discussed in the *Preliminary Results*, we preliminarily found that Ta Chen did not act as a middleman with respect to re–sales of imports by its U.S. affiliate, Ta Chen International (TCI), and we also preliminarily rescinded the review with respect to Ta Chen. *See Preliminary Results*, 74 FR at 39057–58. Since the time of the preliminary results, we received a case brief from the petitioners and a rebuttal brief from Ta Chen addressing this issue. After fully considering the interested parties' comments, we continue to find that these direct sales of SSSSC from Tung Mung to TCI are not subject to a middleman dumping inquiry. Therefore, we are rescinding the review with respect to Ta Chen. For further discussion, see the Issues and Decision Memorandum (Decision Memo), accompanying this notice.

Cost of Production

As discussed in the *Preliminary Results*, we conducted an investigation to determine whether Chia Far made home market sales of the foreign like product during the POR at prices below its cost of production (COP) within the meaning of section 773(b) of the Act. *See Preliminary Results*, 73 FR at 45398–99. For these final results, we made no changes to the cost test performed in the *Preliminary Results*.

We found that more than 20 percent of Chia Far's sales of a given product during the reporting period were at prices less than the weighted–average COP for this period. Thus, we continue to determine that these below–cost sales were made in "substantial quantities" within an extended period of time and at prices which did not permit the recovery of all costs within a reasonable period of time in the normal course of trade. *See* sections 773(b)(2)(B) - (D) of the Act.

Therefore, for purposes of these final results, we continue to find that Chia Far made below–cost sales not in the ordinary course of trade. Consequently, we disregarded the below–cost sales and used the remaining sales as the basis for determining normal value pursuant to section 773(b)(1) of the Act.

Analysis of Comments Received

All issues raised in the case briefs by parties to this administrative review, and to which we have responded, are listed in the Appendix to this notice and addressed in the Decision Memo, which is adopted by this notice. Parties can find a complete discussion of all issues raised in this review and the corresponding recommendations in this public memorandum, which is on file in the Central Records Unit, room 1117, of the main Department building.

In addition, a complete version of the Decision Memo can be accessed directly on the Web at *http://ia.ita.doc.gov/frn/*. The paper copy and electronic version of the Decision Memo are identical in content.

Changes Since the Preliminary Results

Based on our analysis of the comments received, we have made no changes in the margin calculations for Chia Far.

Final Results of Review

We determine that the following weighted–average margin percentage exists for the period July 1, 2007, through June 30, 2008:

Manufacturer/Producer/Exporter	Margin Percentage
Chia Far Industrial Factory Co., Ltd.	4.30

Assessment

The Department shall determine, and CBP shall assess, antidumping duties on all appropriate entries. The Department intends to issue assessment instructions to CBP 15 days after the date of publication of these final results of review.

Pursuant to 19 CFR 351.212(b)(1), we calculated importer–specific *ad valorem* duty assessment rates for Chia Far based on the ratio of the total amount of antidumping duties calculated for the examined sales to the total entered value of those sales. Pursuant to 19 CFR 351.106(c)(2), we will instruct CBP to liquidate without regard to antidumping duties any entries for which the assessment rate is *de minimis* (*i.e.*, less than 0.50 percent).

The Department clarified its "automatic assessment" regulation on May 6, 2003. *See Antidumping and Countervailing Duty Proceedings: Assessment of Antidumping Duties*, 68 FR 23954 (May 6, 2003). This clarification will apply to entries of subject merchandise during the POR produced Chia Far for which Chia Far did not know its merchandise was destined for the United States. This clarification will also apply to POR entries of subject merchandise produced by companies for which we are rescinding the review based on certifications of no shipments, because these companies certified that they made no POR shipments of subject merchandise for which they had knowledge of U.S. destination. In such instances, we will instruct CBP to liquidate unreviewed entries at the all–others rate established in the less–than-fair–value (LTFV) investigation if there is no rate for the intermediate company(ies) involved in the transaction.

Cash Deposit Requirements

Further, the following deposit requirements will be effective for all shipments of SSSSC from Taiwan entered, or withdrawn from warehouse, for consumption on or after the publication date of the final results of this administrative review, as provided for by section 751(a)(2)(C) of the Act: 1) the cash deposit rate for the reviewed company will be the rate shown above, except if the rate is less than 0.50 percent, *de minimis* within the meaning of 19 CFR 351.106(c)(1), the cash

deposit will be zero; 2) for previously investigated companies not listed above, the cash deposit rate will continue to be the company–specific rate published for the most recent period; 3) if the exporter is not a firm covered in this review, or the LTFV investigation, but the manufacturer is, the cash deposit rate will be the rate established for the most recent period for the manufacturer of the merchandise; and 4) the cash deposit rate for all other manufacturers or exporters will continue to be 12.61 percent, the "All Others" rate made effective by the LTFV investigation. *See Notice of Antidumping Duty Order; Stainless Steel Sheet and Strip in Coils From United Kingdom, Taiwan, and South Korea*, 64 FR 40555, 40557 (July 27, 1999). These deposit requirements, when imposed, shall remain in effect until further notice.

Notification to Importers

This notice serves as a final reminder to importers of their responsibility, under 19 CFR 351.402(f)(2), to file a certificate regarding the reimbursement of antidumping duties prior to liquidation of the relevant entries during this review period. Failure to comply with this requirement could result in the Secretary's presumption that reimbursement of antidumping duties occurred and the subsequent assessment of double antidumping duties.

Notification to Interested Parties

This notice serves as the only reminder to parties subject to administrative protective order (APO) of their responsibility concerning the disposition of proprietary information disclosed under APO in accordance with 19 CFR 351.305(a)(3). Timely written notification of return/destruction of APO materials or conversion to judicial protective order is hereby requested. Failure to comply with the regulations and the terms of an APO is a sanctionable violation.

We are issuing and publishing these results of review in accordance with sections 751(a)(1) and 777(i)(1) of the Act.

Dated: February 1, 2010.

Carole A. Showers,

Acting Deputy Assistant Secretary for Policy and Negotiations.

Appendix–Issues in the Decision Memorandum

1. Middleman Dumping

[FR Doc. 2010–2592 Filed 2–4–10; 8:45 am]

BILLING CODE 3510–DS–S

DEPARTMENT OF COMMERCE

National Oceanic and Atmospheric Administration

RIN 0648–XT84

Fisheries of the Caribbean, Gulf of Mexico, and South Atlantic; Snapper and Grouper Off the Southern Atlantic States

AGENCY: National Marine Fisheries Service (NMFS), National Oceanic and Atmospheric Administration (NOAA), Commerce.

ACTION: Notice of receipt of an application for an exempted fishing permit; request for comments.

SUMMARY: NMFS announces the receipt of an application for an exempted fishing permit (EFP) from the Gulf and South Atlantic Fisheries Foundation, Inc. If granted, the EFP would authorize the applicants, with certain conditions, to collect and retain limited numbers of specimens that would otherwise be prohibited from possession and retention. This study, to be conducted in the exclusive economic zone (EEZ) of the South Atlantic and Gulf of Mexico waters, is intended to characterize catch and bycatch within the southeastern shrimp fishery.

DATES: Comments must be received no later than 5 p.m., eastern time, on March 8, 2010.

ADDRESSES: You may submit comments on the application by any of the following methods:

- E-mail: *Steve.Branstetter@noaa.gov.* Include in the subject line of the e-mail comment the following document identifier: "FND_EFP".
- Mail: Steve Branstetter, Southeast Regional Office, NMFS, 263 13th Avenue South, St. Petersburg, FL 33701.
- Fax: 727–824–5308.

The application and related documents are available for review upon written request to any of the above addresses.

FOR FURTHER INFORMATION CONTACT: Steve Branstetter, 727–824–5305; fax: 727–824–5308; e-mail: *Steve.Branstetter@noaa.gov.*

SUPPLEMENTARY INFORMATION: The EFP is requested under the authority of the Magnuson-Stevens Fishery Conservation and Management Act (16 U.S.C. 1801 *et seq.*), and regulations at 50 CFR 600.745(b) concerning exempted fishing.

The described research is part of two Cooperative Agreements (No. NA08NMF4330406 and No. NA09 NMF4540135). The research is intended to involve commercial fishermen in the collection of fundamental fisheries information. Resource collection efforts support the development and evaluation of fisheries management and regulatory options.

The proposed collection for scientific research involves activities otherwise prohibited by regulations at 50 CFR 622, as they affect fish and invertebrates managed by the Gulf of Mexico and South Atlantic Fishery Management Councils (Councils). The EFP covers these Council-managed species that may be taken in association with the commercial shrimp fishery of the southeast United States. This would include reef fish, red drum, coastal migratory pelagics, stone crab, and lobsters in the Gulf of Mexico, and snapper-grouper, coastal migratory pelagics, dolphin and wahoo, and lobsters in the South Atlantic. The EFP exempts personnel from the Gulf and South Atlantic Fisheries Foundation, Inc. (Foundation) from bag limits, size limits, quotas, seasonal restrictions, and gear authorizations, when possessing Council-managed species as part of scientific research activities during the period from March 1, 2010, through July 31, 2011. Specimens would be collected from Federal waters of the South Atlantic and Gulf of Mexico regions. Sampling would occur during normal fishing operations of the commercial penaeid shrimp fishery. Sampling would occur year-round, collecting as many as 500 fish during the course of the sampling. These fish would be retained only in the event of the need for subsequent shore-side identification or as documentation of quality assurance in the data collection process. Data collections for this study would support improved information about the catch, bycatch, discards, and the ability to reduce such bycatch for species taken by the shrimp fishery. These data would provide insight on a stock's resilience to fishing, and would help refine estimates of long-term biological productivity of the stocks. Currently, these data are unavailable, and it is anticipated project results will yield valuable data within this fishery.

NMFS finds this application warrants further consideration. Conditions the agency will impose on this permit, if it is indeed granted, include but are not limited to, a prohibition of conducting research within marine protected areas, marine sanctuaries, or special management zones, without additional authorization. Additionally, NMFS will prohibit the possession of Nassau or goliath grouper, and require any sea turtles taken incidentally during the course of fishing or scientific research

activities to be be handled with due care to prevent injury to live specimens, observed for activity, and returned to the water. All Foundation-associated personnel who conduct onboard sampling activities have undergone formal sea turtle handling training through NMFS, and are considered NMFS-designated agents while conducting work under the identified Cooperative Agreements.

A final decision on issuance of the EFP will depend on a NMFS review of public comments received on the application, consultations with the affected states, the Gulf of Mexico and South Atlantic Fishery Management Councils, and the U.S. Coast Guard, and a determination that it is consistent with all applicable laws.

Authority: 16 U.S.C. 1801 *et seq.*

Dated: February 1, 2010.

Emily H. Menashes,

Acting Director, Office of Sustainable Fisheries, National Marine Fisheries Service.

[FR Doc. 2010–2428 Filed 2–4–10; 8:45 am]

BILLING CODE 3510–22–S

DEPARTMENT OF COMMERCE

National Oceanic and Atmospheric Administration

RIN 0648–XT85

Fisheries of the Caribbean, Gulf of Mexico, and South Atlantic; Reef Fish Fishery of the Gulf of Mexico

AGENCY: National Marine Fisheries Service (NMFS), National Oceanic and Atmospheric Administration (NOAA), Commerce.

ACTION: Notice of receipt of an application for an exempted fishing permit; request for comments.

SUMMARY: NMFS announces the receipt of an application for an exempted fishing permit (EFP) from Mr. Thomas Haugen. If granted, the EFP would authorize the applicant, with certain conditions, to harvest legal-sized fish with unauthorized fishing gear under his commercial reef fish permit and individual fishing quota allocation for one year when testing his size-selective fishing gear called an excluding fishing device (EFD). This study is intended to provide detailed information and disposition of reef fish caught by Mr. Haugen's size-selective fishing device and its affect on minimizing bycatch.

DATES: Comments must be received no later than 5 p.m., eastern time, on March 8, 2010.

ADDRESSES: You may submit comments on the application by any of the following methods:

- E-mail: *Peter.Hood@noaa.gov.* Include in the subject line of the e-mail comment the following document identifier: "Haugen__EFP".
- Mail: Peter Hood, Southeast Regional Office, NMFS, 263 13th Avenue South, St. Petersburg, FL 33701.
- Fax: 727–824–5308.

The application and related documents are available for review upon written request to any of the above addresses.

FOR FURTHER INFORMATION CONTACT: Peter Hood, 727–824–5305; fax: 727–824–5308; e-mail: *Peter.Hood@noaa.gov.*

SUPPLEMENTARY INFORMATION: The EFP is requested under the authority of the Magnuson-Stevens Fishery Conservation and Management Act (16 U.S.C. 1801 *et seq.*), and regulations at 50 CFR 600.745(b) concerning exempted fishing.

The proposed gear testing involves activities otherwise prohibited by regulations implementing the Fishery Management Plan for the Reef Fish Resources of the Gulf of Mexico. The applicant requires authorization to harvest fish with unauthorized fishing gear under his commercial reef fish permit and individual fishing quota (IFQ) allocation for one year while testing his EFD. Testing would occur in Federal waters off the west coast of Florida, in two geographical areas. The northern area is bounded by rhumb lines connecting, in order, the following points:

Point	North latitude	West longitude
A	29°05'00"	84°47'00"
B	28°42'30"	84°24'50"
C	28°42'30"	84°16'20"
D	28°11'00"	84°00'00"
E	28°10'00"	83°45'00"
F	28°10'00"	83°14'00"
G	29°37'00"	84°00'00"
H	29°35'00"	84°38'00"

The southern area is bounded by rhumb lines connecting, in order, the following points:

Point	North latitude	West longitude
A	26°26'00"	82°59'00"
B	26°26'00"	82°29'00"
C	25°15'00"	82°02'00"
D	24°48'00"	82°06'00"
E	24°45'00"	82°42'00"
F	24°48'00"	82°48'00"
G	25°07'30"	82°34'00"
H	26°26'00"	82°59'00"

The gear proposed to be tested is similar to a fish trap but has an adjustable entrance and exit. It would be tested under an experimental design developed with input from NMFS' Southeast Fisheries Science Center. The gear initially would be fished in conjunction with traditional fish traps to determine the size selectivity and bycatch reduction offered by EFD. If shown effective, the EFDs would be used exclusively for the remainder of the year to test what affect further modifications to the gear would have on catch.

Bycatch and regulatory discards are persistent problems in the Gulf of Mexico reef fish fishery. This is particularly important for grouper caught by the commercial sector as stated by the Gulf of Mexico Fishery Management Council in their Amendment 32 to the Fishery Management Plan for the Reef Fish Resources of the Gulf of Mexico. Even though grouper are managed under an IFQ program, potential reductions in the gag allowable biological catch could impinge upon the harvest of red grouper due to gag bycatch. Providing fishermen with a method to target one species over another would allow them to maximize their economic return from fishing while reducing bycatch and regulatory discards.

NMFS finds this application warrants further consideration. Conditions the agency will impose on this permit, if it is indeed granted, include but are not limited to, a prohibition of conducting research within marine protected areas, marine sanctuaries, or special management zones without additional authorization. Additionally, NMFS requires any sea turtles taken incidentally during the course of fishing or scientific research activities to be handled with due care to prevent injury to live specimens, observed for activity, and returned to the water.

A final decision on issuance of the EFP will depend on a NMFS review of public comments received on the

application, consultations with the affected states, the Gulf of Mexico Fishery Management Council, and the U.S. Coast Guard, and a determination that it is consistent with all applicable laws.

Authority: 16 U.S.C. 1801 *et seq.*

Dated: February 1, 2010.

Emily H. Menashes,

Acting Director, Office of Sustainable Fisheries, National Marine Fisheries Service.

[FR Doc. 2010–2429 Filed 2–4–10; 8:45 am]

BILLING CODE 3510–22–S

DEPARTMENT OF COMMERCE

Bureau of Industry and Security

Emerging Technology and Research Advisory Committee; Notice of Partially Closed Meeting

The Emerging Technology and Research Advisory Committee (ETRAC) will meet on February 18 and 19, 2010, 8:30 a.m., Room 3884, at the Herbert C. Hoover Building, 14th Street between Pennsylvania and Constitution Avenues, NW., Washington, DC. The Committee advises the Office of the Assistant Secretary for Export Administration on emerging technology and research activities, including those related to deemed exports.

Agenda

Thursday, February 18

Open Session

1. Opening Remarks.
2. Is Deemed Export Regulation Broken?
3. Discussion with the Bureau of Industry and Security on Process.
4. Deemed Export Control Methodology.
5. Public Comments.

Closed Session

6. Discussion of matters determined to be exempt from the provisions relating to public meetings found in 5 U.S.C. app. 2 §§ 10(a)(1) and 10(a)(3).

Friday, February 19

Open Session

1. NSC Interagency Policy Committee on Export Controls.
2. Corporate Views on BIS Deemed Export Controls.
3. Deemed Export Control Methodology.
4. Discussion of Next TASK.
5. Public Comments.

The open session will be accessible via teleconference to 20 participants on a first come, first serve basis. To join the conference, submit inquiries to Ms. Yvette Springer at *Yspringer@bis.doc.gov* no later than February 10, 2010.

A limited number of seats will be available for the public session. Reservations are not accepted. To the extent that time permits, members of the public may present oral statements to the Committee. The public may submit written statements at any time before or after the meeting. However, to facilitate the distribution of public presentation materials to the Committee members, the Committee suggests that presenters forward the public presentation materials prior to the meeting to Ms. Springer via e-mail.

The Assistant Secretary for Administration, with the concurrence of the delegate of the General Counsel, formally determined on January 26, 2010, pursuant to Section 10(d) of the Federal Advisory Committee Act, as amended (5 U.S.C. app. 2 (10)(d)), that the portion of the meeting dealing with matters the disclosure of portion of the meeting dealing with matters the disclosure of which would be likely to frustrate significantly implementation of an agency action as described in 5 U.S.C. 552b(c)(9)(B) shall be exempt from the provisions relating to public meetings found in 5 U.S.C. app. 2 10(a)1 and 10(a)(3). The remaining portions of the meeting will be open to the public.

For more information, call Yvette Springer at (202) 482–2813.

Dated: January 29, 2010.

Yvette Springer,

Committee Liaison Officer.

[FR Doc. 2010–2502 Filed 2–4–10; 8:45 am]

BILLING CODE 3510–JT–P

DEPARTMENT OF COMMERCE

International Trade Administration

[A–570–890]

Wooden Bedroom Furniture From the People's Republic of China: Preliminary Results of Antidumping Duty Administrative Review and Intent To Rescind Review in Part

AGENCY: Import Administration, International Trade Administration, Department of Commerce.

SUMMARY: In response to requests from interested parties, the Department of Commerce (Department) is conducting an administrative review of the antidumping duty order on wooden bedroom furniture (WBF) from the People's Republic of China (PRC). The period of review (POR) is January 1, 2008 through December 31, 2008. This administrative review covers multiple exporters of the subject merchandise, two of which are being individually examined as mandatory respondents.

We have preliminarily determined that one of the mandatory respondents made sales in the United States at prices below normal value (NV), one mandatory respondent and two separate rate applicants did not demonstrate that they are entitled to a separate rate, and thus have been treated as part of the PRC-wide entity, and 12 separate rate applicants demonstrated that they are entitled to a separate rate and have been assigned the dumping margin calculated for the one fully participating mandatory respondent. If these preliminary results are adopted in our final results of review, we will instruct U.S. Customs and Border Protection (CBP) to assess antidumping duties on entries of subject merchandise during the POR for which the importer-specific assessment rates are above *de minimis.*

We invite interested parties to comment on these preliminary results. Parties who submit comments are requested to submit with each argument a statement of the issue and a brief summary of the argument. We intend to issue the final results of this review no later than 120 days from the date of publication of this notice.

FOR FURTHER INFORMATION CONTACT: Jeff Pedersen or David Edmiston, AD/CVD Operations, Office 4, Import Administration, International Trade Administration, U.S. Department of Commerce, 14th Street and Constitution Avenue, NW., Washington, DC 20230; telephone: (202) 482–2769, and (202) 482–0989 respectively.

SUPPLEMENTARY INFORMATION: On January 4, 2005, the Department published in the **Federal Register** the antidumping duty order on WBF from the PRC. *See Notice of Amended Final Determination of Sales at Less Than Fair Value and Antidumping Duty Order: Wooden Bedroom Furniture from the People's Republic of China,* 70 FR 329 (January 4, 2005) (*Order*). On January 5, 2009, the Department notified interested parties of their opportunity to request an administrative review of orders, finding, or suspended investigations with anniversaries in January 2009, including the antidumping duty order on WBF from the PRC. *See Antidumping or Countervailing Duty Order, Finding, or Suspended Investigation; Opportunity to Request Administrative Review,* 74 FR 265 (January 5, 2009). In January 2009, the American Furniture Manufacturers Committee for Legal Trade and Vaughan-Bassett Furniture Company, Inc., (AFMC/Vaughan-Bassett) (petitioners), Kimball

International, Inc., Kimball Furniture Group, Inc. and Kimball Hospitality Inc., and the domestic interested party American of Martinsville, and certain foreign exporters requested that the Department conduct an administrative review of certain companies. In total, administrative reviews were requested for 200 companies. On February 26, 2009, the Department published in the **Federal Register** a notice initiating an antidumping duty administrative review of WBF from the PRC covering 200 companies and the period January 1, 2008 through December 31, 2008. *See Initiation of Antidumping Duty Administrative Review,* 74 FR 8776 (February 26, 2009) (*Initiation Notice*).

In the *Initiation Notice,* parties were notified that if the Department limited the number of respondents selected for individual examination, it would select respondents based on export/shipment data provided in response to the Department's quantity and value (Q&V) questionnaire. *See Initiation Notice* 74 FR at 8776–77. The *Initiation Notice* also notified parties that they must timely submit Q&V questionnaire responses and separate rate applications or separate rate certifications in order to qualify for a separate rate. *See Id.*

On February 26, 2009, the Department issued Q&V questionnaires to all companies subject to the review, and requested that the companies report the Q&V of their POR exports and/or shipments of WBF to the United States. The Department received Q&V questionnaire responses and separate rate certifications and applications in March and April 2009.[1]

On March 27, 2009, petitioners requested that the Department determine whether certain companies for which it requested a review had absorbed antidumping duties for U.S. sales of WBF made during the POR, pursuant to section 751(a)(4) of the Tariff Act of 1930, as amended (the Act).

In March and April 2009, interested parties submitted comments on respondent selection.[2] Given its limited resources, and the fact that an administrative review was requested for 200 companies/company groupings, using Q&V data the Department limited the number of companies to be individually examined to: (1) Dalian Huafeng Furniture Co., Ltd., (Huafeng) (2) Guangdong Yihua Timber Industry Co., Ltd., (Yihua) and (3) Shanghai Aosen Furniture Co., Ltd. (Aosen) as mandatory respondents.[3]

On April 20 and 21, 2009, the Department issued the antidumping questionnaire to Huafeng, Yihua, Aosen, and made the questionnaire available to the voluntary respondents, which included the group Dongguan Sunrise Furniture Co., Taicang Sunrise Wood Industry Co., Ltd., and Fairmont Designs.[4] After all parties withdrew their review requests for Huafeng and Yihua,[5] the Department issued an amendment to the Respondent Selection Memorandum on May 29, 2009, naming the group Dongguan Sunrise Furniture Co., Taicang Sunrise Wood Industry Co., Ltd., and Fairmont Designs as an additional mandatory respondent.[6]

Between April 2009 and January 2010, Fairmont[7] responded to the Department's questionnaire and supplemental questionnaires and the petitioners commented on Fairmont's responses. After partially responding to section A of the antidumping questionnaire, on June 3, 2009, Aosen notified the Department that it would no longer be participating in the review, except with respect to demonstrating its eligibility to receive a separate rate, briefing, and any hearing that may be held in the review.[8]

After considering comments from interested parties, the Department accepted American of Martinsville's February 2, 2009, request for an administrative review of Guangzhou Maria Yee Furnishings Ltd., PYLA HK Ltd., and Maria Yee, Inc.[9] The Department also determined that Xilinmen Group Co. Ltd. does not currently have separate rate status;[10] decided it was inappropriate to apply Woodworth Wooden Industries (Dong Guan) Co., Ltd.'s separate rate to Woodworth International Corp. (HK);[11] and found that Yeh Brothers World Trade, Inc. had no sales of subject merchandise for export to the United States during the instant POR.[12]

In response to the Department's June 22, 2009, letter providing parties with an opportunity to submit comments regarding surrogate country and surrogate value selection,[13] Fairmont and AFMC/Vaughan Bassett filed surrogate country and surrogate value comments from July 2009 through January 2010.

During March, April, and May 2009, a number of interested parties withdrew their review requests. On September 2, 2009, the Department published a notice rescinding the review with respect to 125 entities for which all review requests had been withdrawn. *See Wooden Bedroom Furniture from the People's Republic of China: Notice of Partial Rescission of Antidumping Duty Administrative Review,* 74 FR 45424 (September 2, 2009).[14]

On September 18, 2009, the Department extended the deadline for

[1] The Department did not receive Q&V questionnaire responses from all 200 of the companies for which the instant review was initiated. *See* the "Non-responsive Companies" section of this notice below for a detailed discussion of these companies. In addition to the mandatory respondents, the Department received separate rate certifications and applications from 12 companies for which all review requests have not been withdrawn.

[2] *See* memorandum to Abdelali Elouaradia regarding "Respondent Selection in the Antidumping Duty Administrative Review of Wooden Bedroom Furniture from the People's Republic of China" dated April 20, 2009 (Respondent Selection Memorandum).

[3] *See* Respondent Selection Memorandum.

[4] Dongguan Sunrise Furniture Co., Taicang Sunrise Wood Industry Co., Ltd., Fairmont Designs, Shanghai Sunrise Furniture Co., Ltd., Fine Furniture (Shanghai) Ltd. and Meikangchi (Nantong) Furniture Company Ltd. requested to be treated as voluntary respondents. *See* Fairmont's Quantity and Value submission of January 29, 2009.

[5] All review requests were withdrawn for Huafeng and Yihua prior to the due date for them to respond to section A of the questionnaire.

[6] *See* memorandum to Abdelali Elouaradia regarding "Amendment to Respondent Selection in the Antidumping Duty Administrative Review of Wooden Bedroom Furniture from the People's Republic of China" dated May 29, 2009.

[7] Fairmont refers to the following companies which the Department has treated as a single entity: Dongguan Sunrise Furniture Co., Ltd., Taicang Sunrise Wood Industry Co., Ltd., Taicang Fairmount Designs Furniture Co., Ltd., and Meizhou Sunrise Furniture Co., Ltd. (Fairmont). *See* memorandum to John M. Andersen regarding "Affiliation and Single Entity Status of Dongguan Sunrise Furniture Co., Ltd., Taicang Sunrise Wood Industry Co., Ltd., Taicang Fairmount Designs Furniture Co., Ltd., and Meizhou Sunrise Furniture Co., Ltd." dated October 8, 2009.

[8] *See* Aosen's Withdrawal of Section A Questionnaire Response, dated June 3, 2009; also *see* the section of this notice entitled "Aosen" below.

[9] *See* April 13, 2009, memorandum entitled "Requests for Review of Maria Yee by American Furniture Manufacturers Committee for Legal Trade and American of Martinsville in the Antidumping Duty Administrative Review of Wooden Bedroom Furniture from the People's Republic of China."

[10] *See* May 8, 2009, memorandum entitled "Xilinmen Group Co. Ltd.'s Separate Rate Status in the Antidumping Duty Proceeding Involving Wooden Bedroom Furniture from the People's Republic of China."

[11] *See* September 15, 2009, memorandum entitled "Woodworth Wooden Industries (Dong Guan) Co., Ltd.'s Request in the Fourth Antidumping Duty Administrative Review of Wooden Bedroom Furniture from the People's Republic of China."

[12] *See* the November 13, 2009, memorandum entitled "2008 Antidumping Duty Administrative Review of Wooden Bedroom Furniture from the People's Republic of China (PRC): Whether to Rescind the Review with Respect to Yeh Brothers World Trade, Inc."

[13] *See* Letter from Howard Smith, Program Manager, Office 4, to All Interested Parties, "Antidumping Duty Administrative Review of Wooden Bedroom Furniture from the People's Republic of China (PRC)," dated June 22, 2009.

[14] Six companies (Ningbo Hengrun Furniture Co. Ltd, Ningbo Furniture Industries Limited, Ningbo Fubang Furniture Industries Limited, Techniwood Industries Ltd., Techniwood (Macao Commercial Offshore) Limited, Ningbo Techniwood Furniture Industries Limited) listed as one company in the initiation were itemized as 4 companies in the rescission notice.

the issuance of the preliminary results of the administrative review until February 1, 2010. *See Wooden Bedroom Furniture from the People's Republic of China: Extension of Time Limits for the Preliminary Results of the Antidumping Duty Administrative Review,* 74 FR 47919 (September 18, 2009).

In October and November, 2009, the Department verified the questionnaire and supplemental questionnaire responses of Fairmont and the separate rate respondent, Longrange Furniture Co. Ltd. (Longrange).[15]

Scope of the Order

The product covered by the order is wooden bedroom furniture. Wooden bedroom furniture is generally, but not exclusively, designed, manufactured, and offered for sale in coordinated groups, or bedrooms, in which all of the individual pieces are of approximately the same style and approximately the same material and/or finish. The subject merchandise is made substantially of wood products, including both solid wood and also engineered wood products made from wood particles, fibers, or other wooden materials such as plywood, strand board, particle board, and fiberboard, with or without wood veneers, wood overlays, or laminates, with or without non-wood components or trim such as metal, marble, leather, glass, plastic, or other resins, and whether or not assembled, completed, or finished.

The subject merchandise includes the following items: (1) Wooden beds such as loft beds, bunk beds, and other beds; (2) wooden headboards for beds (whether stand-alone or attached to side rails), wooden footboards for beds, wooden side rails for beds, and wooden canopies for beds; (3) night tables, night stands, dressers, commodes, bureaus, mule chests, gentlemen's chests, bachelor's chests, lingerie chests, wardrobes, vanities, chessers, chifforobes, and wardrobe-type cabinets; (4) dressers with framed glass mirrors that are attached to, incorporated in, sit on, or hang over the dresser; (5) chests-on-chests,[16] highboys,[17] lowboys,[18] chests of drawers,[19] chests,[20] door chests,[21] chiffoniers,[22] hutches,[23] and armoires;[24] (6) desks, computer stands, filing cabinets, book cases, or writing tables that are attached to or incorporated in the subject merchandise; and (7) other bedroom furniture consistent with the above list.

The scope of the order excludes the following items: (1) Seats, chairs, benches, couches, sofas, sofa beds, stools, and other seating furniture; (2) mattresses, mattress supports (including box springs), infant cribs, water beds, and futon frames; (3) office furniture, such as desks, stand-up desks, computer cabinets, filing cabinets, credenzas, and bookcases; (4) dining room or kitchen furniture such as dining tables, chairs, servers, sideboards, buffets, corner cabinets, china cabinets, and china hutches; (5) other non-bedroom furniture, such as television cabinets, cocktail tables, end tables, occasional tables, wall systems, book cases, and entertainment systems; (6) bedroom furniture made primarily of wicker, cane, osier, bamboo or rattan; (7) side rails for beds made of metal if sold separately from the headboard and footboard; (8) bedroom furniture in which bentwood parts predominate;[25] (9) jewelry armories;[26] (10) cheval mirrors;[27] (11) certain metal parts;[28] (12) mirrors that do not attach to, incorporate in, sit on, or hang over a dresser if they are not designed and marketed to be sold in conjunction with a dresser as part of a dresser-mirror set; (13) upholstered beds[29] and (14) toy boxes.[30]

[15] *See* the separate December 30, 2009, memoranda regarding verification in the 4th Antidumping Duty Administrative Review of Wooden Bedroom Furniture from the People's Republic of China covering Longrange, Dongguan Sunrise Furniture Co., Ltd., Fairmont International Co., Ltd., Cambium Business Group, Inc. (d.b.a. Fairmont), FDUSA, and Taicang Sunrise Wood Industry Co., Ltd. (referred to collectively as the 4th Review Verification Reports).

[16] A chest-on-chest is typically a tall chest-of-drawers in two or more sections (or appearing to be in two or more sections), with one or two sections mounted (or appearing to be mounted) on a slightly larger chest; also known as a tallboy.

[17] A highboy is typically a tall chest of drawers usually composed of a base and a top section with drawers, and supported on four legs or a small chest (often 15 inches or more in height).

[18] A lowboy is typically a short chest of drawers, not more than four feet high, normally set on short legs.

[19] A chest of drawers is typically a case containing drawers for storing clothing.

[20] A chest is typically a case piece taller than it is wide featuring a series of drawers and with or without one or more doors for storing clothing. The piece can either include drawers or be designed as a large box incorporating a lid.

[21] A door chest is typically a chest with hinged doors to store clothing, whether or not containing drawers. The piece may also include shelves for televisions and other entertainment electronics.

[22] A chiffonier is typically a tall and narrow chest of drawers normally used for storing undergarments and lingerie, often with mirror(s) attached.

[23] A hutch is typically an open case of furniture with shelves that typically sits on another piece of furniture and provides storage for clothes.

[24] An armoire is typically a tall cabinet or wardrobe (typically 50 inches or taller), with doors, and with one or more drawers (either exterior below or above the doors or interior behind the doors), shelves, and/or garment rods or other apparatus for storing clothes. Bedroom armoires may also be used to hold television receivers and/or other audio-visual entertainment systems.

[25] As used herein, bentwood means solid wood made pliable. Bentwood is wood that is brought to a curved shape by bending it while made pliable with moist heat or other agency and then set by cooling or drying. *See* Customs' Headquarters' Ruling Letter 043859, dated May 17, 1976.

[26] Any armoire, cabinet or other accent item for the purpose of storing jewelry, not to exceed 24 in width, 18 in depth, and 49 in height, including a minimum of 5 lined drawers lined with felt or felt-like material, at least one side door (whether or not the door is lined with felt or felt-like material), with necklace hangers, and a flip-top lid with inset mirror. *See* Issues and Decision Memorandum from Laurel LaCivita to Laurie Parkhill, Office Director, Concerning Jewelry Armoires and Cheval Mirrors in the Antidumping Duty Investigation of Wooden Bedroom Furniture from the People's Republic of China, dated August 31, 2004. *See also Wooden Bedroom Furniture from the People's Republic of China: Notice of Final Results of Changed Circumstances Review and Revocation in Part,* 71 FR 38621 (July 7, 2006).

[27] Cheval mirrors are any framed, tiltable mirror with a height in excess of 50 that is mounted on a floor-standing, hinged base. Additionally, the scope of the order excludes combination cheval mirror/jewelry cabinets. The excluded merchandise is an integrated piece consisting of a cheval mirror, *i.e.,* a framed tiltable mirror with a height in excess of 50 inches, mounted on a floor-standing, hinged base, the cheval mirror serving as a door to a cabinet back that is integral to the structure of the mirror and which constitutes a jewelry cabinet line with fabric, having necklace and bracelet hooks, mountings for rings and shelves, with or without a working lock and key to secure the contents of the jewelry cabinet back to the cheval mirror, and no drawers anywhere on the integrated piece. The fully assembled piece must be at least 50 inches in height, 14.5 inches in width, and 3 inches in depth. *See Wooden Bedroom Furniture From the People's Republic of China: Final Results of Changed Circumstances Review and Determination to Revoke Order in Part,* 72 FR 948 (January 9, 2007).

[28] Metal furniture parts and unfinished furniture parts made of wood products (as defined above) that are not otherwise specifically named in this scope (*i.e.,* wooden headboards for beds, wooden footboards for beds, wooden side rails for beds, and wooden canopies for beds) and that do not possess the essential character of wooden bedroom furniture in an unassembled, incomplete, or unfinished form. Such parts are usually classified under the Harmonized Tariff Schedule of the United States ("HTSUS") subheading 9403.90.7000.

[29] Upholstered beds that are completely upholstered, *i.e.,* containing filling material and completely covered in sewn genuine leather, synthetic leather, or natural or synthetic decorative fabric. To be excluded, the entire bed (headboards, footboards, and side rails) must be upholstered except for bed feet, which may be of wood, metal, or any other material and which are no more than nine inches in height from the floor. *See Wooden Bedroom Furniture from the People's Republic of China: Final Results of Changed Circumstances Review and Determination to Revoke Order in Part,* 72 FR 7013 (February 14, 2007).

[30] To be excluded the toy box must: (1) Be wider than it is tall; (2) have dimensions within 16 inches to 27 inches in height, 15 inches to 18 inches in depth, and 21 inches to 30 inches in width; (3) have a hinged lid that encompasses the entire top of the box; (4) not incorporate any doors or drawers; (5) have slow-closing safety hinges; (6) have air vents; (7) have no locking mechanism; and (8) comply with American Society for Testing and Materials (ASTM) standard F963–03. Toy boxes are boxes

Imports of subject merchandise are classified under subheading 9403.50.9040 of the HTSUS as "wooden * * * beds" and under subheading 9403.50.9080 of the HTSUS as "other * * * wooden furniture of a kind used in the bedroom." In addition, wooden headboards for beds, wooden footboards for beds, wooden side rails for beds, and wooden canopies for beds may also be entered under subheading 9403.50.9040 of the HTSUS as "parts of wood" and framed glass mirrors may also be entered under subheading 7009.92.5000 of the HTSUS as "glass mirrors * * * framed." This order covers all WBF meeting the above description, regardless of tariff classification. Although the HTSUS subheadings are provided for convenience and customs purposes, our written description of the scope of this proceeding is dispositive.

Verification

As provided in section 782(i) of the Act, we have verified information provided by Fairmont and Longrange using standard verification procedures including on-site inspection of the manufacturer's facilities and the examination of relevant sales and financial records. Our verification results are outlined in the verification reports, the public versions of which are available in the Central Records Unit, Room 1117 of the main Department building.[31]

Duty Absorption

Section 751(a)(4) of the Act provides for the Department, if requested, to determine during an administrative review initiated two or four years after publication of the order, whether antidumping duties have been absorbed by a foreign producer or exporter, if the subject merchandise is sold in the United States through an affiliated importer. *See also,* 19 CFR 351.213(j). On March 27, 2009, the petitioners requested that the Department determine whether the mandatory respondents and separate-rate respondents had absorbed antidumping duties for U.S. sales of WBF made during the POR. Since the instant review was initiated four years after publication of the WBF order, we have conducted a duty absorption analysis.

In determining whether the antidumping duties have been absorbed by the respondent, we presume the duties will be absorbed for those sales that have been made at less than NV. This presumption can be rebutted with evidence (*e.g.,* an agreement between the affiliated importer and unaffiliated purchaser) that the unaffiliated purchaser will pay the full duty ultimately assessed on the subject merchandise. *See, e.g., Certain Stainless Steel Butt-Weld Pipe Fittings From Taiwan: Preliminary Results of Antidumping Duty Administrative Review and Notice of Intent to Rescind in Part,* 70 FR 39735, 39737 (July 11, 2005), (unchanged in final results) *Notice of Final Results and Final Rescission in Part of Antidumping Duty Administrative Review: Certain Stainless Steel Butt-Weld Pipe Fittings From Taiwan,* 70 FR 73727, 73728 (December 13, 2005). The Department requested that Fairmont provide evidence that its unaffiliated U.S. purchaser will pay any antidumping duties ultimately assessed on entries of subject merchandise.[32] Fairmont did not provide any evidence in response to the Department's request.[33] Accordingly, based on the information on the record, we cannot conclude that the unaffiliated purchasers in the United States will ultimately pay assessed duties. Since Fairmont did not rebut the duty-absorption presumption with evidence that its unaffiliated U.S. purchasers will pay the full duty ultimately assessed on the subject merchandise, we preliminarily find that antidumping duties have been absorbed by Fairmont on all U.S. sales made through its affiliated importer.

The separate-rate respondents were only requested to provide information on their separate-rate status. Thus, we do not have the information necessary to assess whether the separate-rate respondents absorbed antidumping duties. Accordingly, we cannot make duty absorption determinations with respect to these companies. As explained below, Aosen did not fully participate in this review and has been treated as part of the PRC entity.

Intent To Rescind the 2008 Administrative Review, in Part

In response to the Department's Q&V questionnaire, 27 companies reported that they made no shipments of subject merchandise to the United States during the POR. To test these claims the Department ran a CBP data query, issued no-shipment inquiries to CBP asking it to provide any information that contradicted the no shipment claims, and obtained entry documents from CBP.[34] After examining record information, we have preliminarily determined that one of the 27 companies, Inni Furniture, did have shipments of subject merchandise that entered the United States during the POR.[35] In addition, we found that there was insufficient evidence on the record to preliminarily rescind the review with respect to another company, Nanjing Nanmu Furniture Co., Ltd. (Nanjing Nanmu). We intend to obtain additional information regarding Nanjing Nanmu's no shipments claim and to continue examining the claim.

Since record evidence did not contradict the no shipment claims of the following companies, the Department has preliminarily rescinded this administrative review with respect to these companies pursuant to 19 CFR 351.213(d)(3):

- Dalian Pretty Home Furniture
- Dongguan Dihao Furniture Co., Ltd.
- Dongguan Mingsheng Furniture Co., Ltd.
- Dongguan Mu Si Furniture Co., Ltd.
- Dongguan Sunshine Furniture Co., Ltd.
- Fortune Furniture Ltd., Dongguan Fortune Furniture Ltd.
- Foshan Guanqiu Furniture Co., Ltd.
- Fujian Lianfu Forestry Co., Ltd., a.k.a. Fujian Wonder Pacific Inc. (Dare Group)
- Fuzhou Huan Mei Furniture Co., Ltd. (Dare Group)

generally designed for the purpose of storing children's items such as toys, books, and playthings. *See Wooden Bedroom Furniture from the People's Republic of China: Final Results of Changed Circumstances Review and Determination to Revoke Order in Part,* 74 FR 8506 (February 25, 2009). Further, as determined in the scope ruling memorandum "Wooden Bedroom Furniture from the People's Republic of China: Scope Ruling on a White Toy Box," dated July 6, 2009, the dimensional ranges used to identify the toy boxes that are excluded from the wooden bedroom furniture order apply to the box itself rather than the lid.

[31] *See* the February 1, 2010, memoranda titled "Verification of the Sales and Separate Rate Questionnaire Responses of Longrange Furniture Co., Ltd in the 4th Antidumping Duty Administrative Review of Wooden Bedroom Furniture from the People's Republic of China (PRC)," "Verification at Dongguan Sunrise Furniture Co., Ltd. in the 4th Antidumping Duty Administrative Review of Wooden Bedroom Furniture from the People's Republic of China," "Verification at Fairmont International Co., Ltd. in the 4th Antidumping Duty Administrative Review of Wooden Bedroom Furniture from the People's Republic of China," "Verification at Cambium Business Group, Inc. (d.b.a. Fairmont) in the 4th Antidumping Duty Administrative Review of Wooden Bedroom Furniture from the People's Republic of China," and "Verification at Taicang Sunrise Wood Industry Co., Ltd. in the 4th Antidumping Duty Administrative Review of Wooden Bedroom Furniture from the People's Republic of China," (collectively referred to as the 4th Review Verification Reports).

[32] *See* the Department's June 10, 2009, supplemental questionnaire sent to Fairmont at question 146.

[33] *See* Fairmont's July 2, 2009, supplemental questionnaire response.

[34] *See* memorandum to Abdelali Elouaradia Director Office 4 regarding "Intent to Rescind the Review of Respondents Claiming No Sales/Shipments" dated February 1, 2010.

[35] *See Id; see also* the "Separate Rates" section of this notice below for further information regarding the treatment of Inni.

- Gaomi Yatai Wooden Ware Co., Ltd., Team Prospect International Ltd., Money Gain International Co.
- Golden Well International (HK), Ltd.
- Guangdong New Four Seas Furniture Manufacturing Ltd.
- Guangzhou Lucky Furniture Co. Ltd.
- Jiangsu Dare Furniture Co., Ltd. (Dare Group)
- Macau Youcheng Trading Co., Zhongshan Youcheng Wooden Arts & Crafts Co., Ltd.
- Nantong Yangzi Furniture Co., Ltd.
- Po Ying Industrial Co.
- Qingdao Beiyuan-Shengli Furniture Co., Ltd., Qingdao Beiyuan Industry Trading Co. Ltd.
- Qingdao Shengchang Wooden Co., Ltd
- Shanghai Fangjia Industry Co., Ltd.[36]
- Shenzhen Shen Long Hang Industry Co., Ltd.
- Tianjin First Wood Co., Ltd.
- Winmost Enterprises Limited
- Yeh Brothers World Trade, Inc.[37]
- Zhangzhou XYM Furniture Product Co., Ltd.

Non-Market Economy Country Status

In every case conducted by the Department involving the PRC, the PRC has been treated as a non-market economy (NME) country. In accordance with section 771(18)(C)(i) of the Act, any determination that a foreign country is an NME country shall remain in effect until revoked by the administering authority. None of the parties to this proceeding have contested such treatment. Accordingly, the Department calculated NV in accordance with section 773(c) of the Act, which applies to NME countries.

Selection of a Surrogate Country

When the Department conducts an antidumping duty administrative review of imports from a NME country, section 773(c)(1) of the Act directs the Department to base NV, in most cases, on the NME producer's factors of production (FOP) valued in a surrogate market-economy country or countries considered appropriate by the Department. In accordance with section 773(c)(4) of the Act, the Department will value FOP using "to the extent possible, the prices or costs of factors of production in one or more market economy countries that are—(A) At a level of economic development comparable to that of the NME country, and (B) significant producers of comparable merchandise." Further, pursuant to 19 CFR 351.408(c)(2), the Department will normally value all FOP in a single country, except for labor.

In the instant review, the Department identified India, Indonesia, the Philippines, Colombia, Thailand, and Peru as being at a level of economic development comparable to the PRC.[38] On July 20, 2009, the petitioners and Fairmont provided information regarding the selection of a surrogate country.[39] On August 11, 2009, the Department received rebuttal surrogate country comments from Fairmont.[40] Although AFMC/Vaughan Bassett asserts that India is the appropriate surrogate country in the instant review, they recognize that in the two most recent segments of this proceeding, the Department selected the Philippines as the surrogate country and therefore, they submitted surrogate value information from the Philippines.[41] Fairmont asserts that the Philippines should be selected as the surrogate country.[42] No other interested parties commented on the selection of a surrogate country.

Based on the information on the record, we find that the Philippines is a significant producer of comparable merchandise. Specifically, *The Furniture Industry in the Philippines* report indicates that in 2006, Philippine manufacturers produced furniture valued at $813 million and the Philippines exported furniture valued at $279 million.[43] The *State of the Sector Report on Philippine Furniture 2006* indicates that wooden furniture has replaced rattan as the most commonly used material and accounted for 51% of all Philippine furniture exports.[44] In addition, both *The Furniture Industry in the Philippines* and *State of the Sector Report on Philippine Furniture 2006* describe the furniture sector as comprised of approximately 15,000 manufacturers and 800,000 workers.[45] Thus, record evidence shows that the Philippines is a significant producer of merchandise that is comparable to the merchandise under review.

With respect to data considerations in selecting a surrogate country, AFMC/Vaughan Bassett and Fairmont have submitted publicly-available Philippine data for valuing Fairmont's FOP. In addition, the Department used the Philippines as the primary surrogate country in the second and third administrative reviews of this proceeding.[46] Therefore, based on its experience, the Department finds that reliable, publicly available data for valuing FOPs exists for the Philippines.

Thus, the Department has preliminarily selected the Philippines as the surrogate country because the record shows that the Philippines is at a level of economic development comparable to that of the PRC and is a significant producer of merchandise comparable to subject merchandise. Moreover, the record indicates that sufficient, contemporaneous, public Philippine data are readily-available.[47] Accordingly, we have selected the Philippines as the surrogate country and we have calculated NV using Philippine prices to value Fairmont's FOP.[48] In accordance with 19 CFR 351.301(c)(3)(ii), interested parties may submit publicly-available information to value FOP until 20 days after the date of publication of the preliminary results.[49]

[36] Shanghai Fangjia's only sales made during the POR were covered by a new shipper review covering the period January 1, 2008, through June 30, 2008 and thus are not subject to this review. *See Wooden Bedroom Furniture From the People's Republic of China: Final Results of New Shipper Review,* 74 FR 48905 (September 25, 2009).

[37] *See* the memorandum to Abdelali Elouaradia Director, Office 4 regarding the "2008 Antidumping Duty Administrative Review of Wooden Bedroom Furniture from the People's Republic of China (PRC): Whether to Rescind the Review with Respect to Yeh Brothers World Trade, Inc." dated November 13, 2009 in which the Department indicated that it intended to rescind the instant review with respect to Yeh Brothers.

[38] *See* memorandum entitled, "Request for a List of Surrogate Countries for an Administrative Review of the Antidumping Duty Order on Wooden Bedroom Furniture ("WBF") from the People's Republic of China ("PRC")," dated April 24, 2009 (Policy Memorandum).

[39] *See* Letter from petitioners regarding, "Wooden Bedroom Furniture From the People's Republic of China: Surrogate Country Comments," dated July 20, 2009, ("Petitioners' Surrogate Country Comments") and Letter from Fairmont regarding, "Wooden Bedroom Furniture From the People's Republic of China, A–570–890: Comments on Surrogate Country Selection," July 20, 2009 (Fairmont's Surrogate Country Comments").

[40] *See* Letter from Fairmont regarding, "Wooden Bedroom Furniture From the People's Republic of China, A–570–890: Rebuttal to Petitioners Surrogate Country and Surrogate Value Comments of July 20, 2009, " dated August 11, 2009.

[41] *See* Petitioners' Surrogate Country Comments at 2.

[42] *See* Fairmont's Surrogate Country Comments at 1–2.

[43] *See Id.* at Exhibit 4.

[44] *See Id.*

[45] *See Id.* at Exhibits 2 and 4.

[46] *See Wooden Bedroom Furniture from the People's Republic of China: Preliminary Results of Antidumping Duty Administrative Review, Preliminary Results of New Shipper Review and Partial Rescission of Administrative Review,* 73 FR 8273, 8277–78 (February 13, 2008) (unchanged in the final results) and *Wooden Bedroom Furniture from the People's Republic of China: Preliminary Results of Antidumping Duty Administrative and New Shipper Reviews and Partial Rescission of Review,* 74 FR 6372, 6376 (February 9, 2009) (unchanged in the final results).

[47] *See* February 1, 2010 memorandum entitled "Fairmont Designs Factor Valuation Memorandum" (Factor Valuation Memorandum).

[48] *See Id.*

[49] In accordance with 19 CFR 351.301(c)(1), for the final results of this administrative review, interested parties may submit factual information to rebut, clarify, or correct factual information submitted by an interested party less than ten days before, on, or after, the applicable deadline for submission of such factual information. However, the Department notes that 19 CFR 351.301(c)(1)

Separate Rates

In proceedings involving NME countries, the Department has a rebuttable presumption that all companies within the country are subject to government control and thus should be assessed a single antidumping duty rate. It is the Department's policy to assign all exporters of subject merchandise in a NME country this single rate unless an exporter can demonstrate that it is sufficiently independent so as to be entitled to a separate rate. Exporters can demonstrate this independence through the absence of both *de jure* and *de facto* governmental control over export activities. The Department analyzes each entity exporting the subject merchandise under a test arising from the *Notice of Final Determination of Sales at Less Than Fair Value: Sparklers from the People's Republic of China,* 56 FR 20588 (May 6, 1991) (*Sparklers*), as further developed in *Notice of Final Determination of Sales at Less Than Fair Value: Silicon Carbide from the People's Republic of China,* 59 FR 22585, 22586–87 (May 2, 1994) (*Silicon Carbide*). However, if the Department determines that a company is wholly foreign-owned or located in a market economy, then a separate rate analysis is not necessary to determine whether it is independent from government control. *See Notice of Final Determination of Sales at Less Than Fair Value: Creatine Monohydrate from the People's Republic of China,* 64 FR 71104, 71105 (December 20, 1999) (where the respondent was wholly foreign-owned, and thus, qualified for a separate rate).

A. Separate Rate Recipients

1. Wholly Foreign-Owned

Certain companies reported they are wholly owned by individuals or companies located in a market economy (collectively "Foreign-owned SR Applicants"). The record indicates that these companies are wholly foreign-owned and the Department has no evidence indicating that they are under the control of the PRC government. Accordingly, the Department has preliminarily granted a separate rate to these Foreign-owned SR Applicants. *See Preliminary Results of Review* section below for companies marked with a "^" designating these companies as wholly foreign-owned.

2. Joint Ventures Between Chinese and Foreign Companies or Wholly Chinese-Owned Companies

For all separate-rate applicants that reported that they are either joint ventures between Chinese and foreign companies or are wholly Chinese-owned companies (collectively PRC SR Applicants), the Department has analyzed whether each PRC SR Applicant has demonstrated the absence of *de jure* and *de facto* governmental control over its respective export activities.

a. Absence of *De Jure* Control

The Department considers the following *de jure* criteria in determining whether an individual company may be granted a separate rate: (1) An absence of restrictive stipulations associated with an individual exporter's business and export license; (2) legislative enactments decentralizing control of companies; and (3) other formal measures by the government decentralizing control of companies. *See Sparklers,* 56 FR at 20589.

The evidence provided by the PRC SR Applicants supports a preliminary finding of *de jure* absence of governmental control based on the following: (1) An absence of restrictive stipulations associated with the individual exporters' business and export licenses; (2) applicable legislative enactments decentralizing control of PRC companies; and (3) formal measures by the government decentralizing control of PRC companies.

b. Absence of *De Facto* Control

The Department considers four factors in evaluating whether each respondent is subject to *de facto* governmental control of its export functions: (1) Whether the export prices are set by or are subject to the approval of a governmental agency; (2) whether the respondent has authority to negotiate and sign contracts and other agreements; (3) whether the respondent has autonomy from the government in making decisions regarding the selection of management; and (4) whether the respondent retains the proceeds of its export sales and makes independent decisions regarding disposition of profits or financing of losses. *See Silicon Carbide,* 59 FR at 22586–87; *see also Notice of Final Determination of Sales at Less Than Fair Value: Furfuryl Alcohol From the People's Republic of China,* 60 FR 22544, 22545 (May 8, 1995). The Department has determined that an analysis of *de facto* control is critical in determining whether respondents are, in fact, subject to a degree of governmental control which would preclude the Department from assigning separate rates.

The evidence provided by the SR Applicants supports a preliminary finding of *de facto* absence of governmental control based on the following: (1) An absence of restrictive governmental control on the PRC SR Applicants' export prices; (2) a showing of the PRC SR Applicants' authority to negotiate and sign contracts and other agreements; (3) a showing that the PRC SR Applicants maintain autonomy from the government in making decisions regarding the selection of management; and (4) a showing that the PRC SR Applicants retain the proceeds of their respective export sales and make independent decisions regarding disposition of profits or financing of losses.

The evidence placed on the record by the PRC SR Applicants demonstrates an absence of *de jure* and *de facto* government control, in accordance with the criteria identified in *Sparklers* and *Silicon Carbide.* Accordingly, the Department has preliminarily granted a separate rate to the PRC SR Applicants. *See* "Preliminary Results of Review" section below for companies marked with an "*" designating these companies as joint ventures between Chinese and foreign companies or wholly Chinese-owned companies.

B. Margins for Separate Rate Recipients Not Individually Examined

Consistent with our normal practice, we based the weighted-average dumping margin for the separate rate recipients not individually examined on the weighted average dumping margin calculated for Fairmont, the one mandatory respondent that fully participated in this review. The entities receiving this rate are identified by name in the "Preliminary Results of Review" section of this notice.

C. Nanjing Nanmu

Nanjing Nanmu, which had been granted a separate rate in the most recently completed review in which it was a respondent, did not file a separate rate application or separate rate certification in the instant review. Instead, Nanjing Nanmu reported that it made no shipments of subject merchandise to the United States during the POR. When record evidence does not call into question the no shipments claim of a respondent with a separate

permits new information only insofar as it rebuts, clarifies, or corrects information placed on the record. The Department generally will not accept the submission of additional, previously absent-from-the-record alternative surrogate value information pursuant to 19 CFR 351.301(c)(1). *See Glycine from the People's Republic of China: Final Results of Antidumping Duty Administrative Review and Final Rescission, in Part,* 72 FR 58809 (October 17, 2007) and accompanying Issues and Decision Memorandum at Comment 2.

rate, the Department generally will rescind the review in which the respondent claimed no shipments and the respondent will retain its separate rate. However, as noted above, the Department has not preliminarily rescinded the review with respect to Nanjing Nanmu; rather it intends to obtain additional information regarding Nanjing Nanmu's no shipments claim and to continue examining the claim. As Nanjing Nanmu has not applied for separate rate status in this administrative review, and we have not preliminarily rescinded the review with respect to Nanjing Nanmu, we have considered Nanjing Nanmu to be part of the PRC-wide entity for purposes of these preliminary results. The Department intends to make a preliminary determination regarding whether Nanjing Nanmu shipped subject merchandise during the POR at a later date.

D. Companies Not Receiving a Separate Rate

The following 34 companies for which the Department initiated the instant review did not provide a separate rate certification or application:

- Best King International Ltd.
- Brother Furniture Manufacture Co., Ltd.
- BNBM Co., Ltd. (aka Beijing New Materials Co., Ltd.)
- Classic Furniture Global Co., Ltd.
- Der Cheng Wooden Works of Factory
- Dong Guan Golden Fortune Houseware Co., Ltd.
- Dongguan Chunsan Wood Products Co., Ltd., Trendex Industries Ltd.
- Dongguan Hua Ban Furniture Co., Ltd.
- Dongguan New Technology Import & Export Co., Ltd.
- Dongguan Sunpower Enterprise Co., Ltd.
- Ever Spring Furniture Co. Ltd., S.Y.C Family Enterprise Co., Ltd.
- Furnmart Ltd.
- Green River Wood (Dongguan) Ltd.
- Guangming Group Wumahe Furniture Co., Ltd.
- Hamilton & Spill Ltd.
- Hung Fai Wood Products Factory, Ltd.
- Hwang Ho International Holdings Limited
- Kalanter (Hong Kong) Furniture Company Limited
- King Kei Furniture Factory, King Kei Trading Co., Ltd., Jiu Ching Trading Co., Ltd.
- King Wood Furniture Co., Ltd.
- King's Way Furniture Industries Co., Ltd., Kingsyear Ltd.
- Profit Force Ltd.
- Shenyang Kunyu Wood Industry Co., Ltd.
- Shenzhen Dafuhao Industrial Development Co., Ltd.
- Sino Concord International Corporation
- Starwood Furniture Manufacturing Co. Ltd.
- Top Goal Development Co.
- Union Friend International Trade Co., Ltd.
- Wan Bao Chen Group Hong Kong Co. Ltd.
- Xingli Arts & Crafts Factory of Yangchun
- Yangchen Hengli Co., Ltd.
- Yichun Guangming Furniture Co., Ltd.
- Yongxin Industrial (Holdings) Limited
- Zhong Cheng Furniture Co., Ltd.

In addition, with the exception of Brother Furniture Manufacture Co., Ltd., none of the above companies responded to the Department's Q&V questionnaire.

The companies listed above, which were named in the *Initiation Notice,* were notified in that notice that they must timely submit Q&V questionnaire responses and separate rate applications or separate rate certifications in order to qualify for a separate rate. Additionally, the *Initiation Notice* identified the Web site address where the separate rate certification, the separate rate application, and the Q&V questionnaire could be found. Further, the Department sent Q&V questionnaires to each of the above companies.[50] Since each of the companies listed above did not provide separate rate information, they have failed to demonstrate their eligibility for separate-rate status. As a result, the Department is treating these PRC exporters as part of the PRC-wide entity.

Also, Inni Furniture, which the Department found to have made shipments of subject merchandise during the POR, despite its claims to the contrary, did not file a separate rate certification or application. Since this company did not provide separate rate information, it has failed to demonstrate its eligibility for separate-rate status. As a result, the Department is treating this company as part of the PRC-wide entity.

Aosen

After examining Aosen's response to section A of the Department's antidumping duty questionnaire, the Department determined that the response was incomplete (Aosen did not respond to questions in Appendix X of the questionnaire), and that it required additional information, including information related to Aosen's eligibility for a separate rate. On June 3, 2009, the Department issued a supplemental questionnaire to Aosen. On that same day, Aosen notified the Department that it would no longer participate in the instant review, except with respect to demonstrating its eligibility for a separate rate.[51] Aosen did not respond to sections C or D of the antidumping questionnaire, nor did it respond to the section A supplemental questionnaire. On June 30, 2009, the Department issued a letter notifying Aosen that "it requires mandatory respondents to fully participate in a proceeding in order to qualify for separate rate status."[52] In that letter, the Department provided Aosen with additional time to complete Appendix X of the questionnaire and the section A supplemental questionnaire and explained that, once selected as a mandatory respondent, a respondent cannot decide to participate in a review only for purposes of establishing its separate rate status. Aosen did not submit a response to either Appendix X or the supplemental questionnaire, but instead it submitted a letter stating that it was no longer participating in the instant review "except with respect to demonstrating the evidence it has already placed on the record is correct, submitting comments on the Department's preliminary and final results, and participating in any hearing in this review."[53]

We preliminarily determine that Aosen has withheld requested information and, contrary to its assertions, that Aosen has not demonstrated its eligibility for separate-rate status in this administrative review. Although Aosen provided a response to the separate rate portion of section A of the questionnaire, it failed to respond to the section A supplemental questionnaire which contained several questions and requests relating to its separate rate status. For example, Aosen failed to respond to requests in the supplemental section A questionnaire asking it to provide documents memorializing the making or approving of pricing decisions, a complete set of written price negotiations for sales

[50] The Department was able to confirm delivery of the Q&V questionnaire to all of the companies listed above except the following companies: Yongxin Industrial (Holdings) Limited, Ever Spring Furniture Co. Ltd., S.Y.C Family Enterprise Co., Ltd., King's Way Furniture Industries Co., Ltd., Kingsyear Ltd., Yichun Guangming Furniture Co., Ltd. *See* memorandum to the File regarding "Delivery Documentation for Quantity and Value Questionnaires Sent to Nonresponsive Companies" dated August 5, 2009; *see also* memorandum to the File regarding "Quantity and Value Questionnaires That Could Not Be Delivered" dated December 9, 2009. In issuing Q&V questionnaires, the Department relied upon the addresses provided by the petitioners and attempted to obtain new addresses from the petitioners and to resend the Q&V questionnaire to companies to which the first Q&V questionnaire issued could not be delivered.

[51] *See* Aosen's letter regarding "Wooden Bedroom Furniture from the People's Republic of China; Withdrawal of Shanghai Aosen Section A Questionnaire Response" dated June 3, 2009.

[52] *See* letter to Shanghai Aosen Furniture Co., Ltd. regarding "Antidumping Duty Administrative Review of Wooden Bedroom Furniture from the People's Republic of China ("PRC") for the Period January 1, 2008, through December 31, 2008, dated June 30, 2009.

[53] *See* Aosen's letter regarding "Wooden Bedroom Furniture from the People's Republic of China; Withdrawal of Shanghai Aosen Furniture Co., Ltd." (July 13, 2009) at 1.

during the period of review, and written evidence supporting claims regarding the selection of management. Moreover, Aosen did not respond to the supplemental questions asking how the general manager was selected and who was authorized to sign sales contracts, nor did it respond to requests in the section A supplemental questionnaire regarding its business license and capital verification report. Since Aosen failed to provide information requested by the Department that is necessary to analyze whether it qualified for a separate rate, Aosen has failed to rebut the presumption of PRC government control. Therefore, we have preliminarily determined that Aosen does not qualify for a separate rate, but rather should be treated as part of the PRC-wide entity. Furthermore, as noted in the Department's June 30, 2009 letter, once selected as a mandatory respondent, a company may not chose to participate in an administrative review solely for purposes of demonstrating its eligibility for a separate rate. It must fully participate in the review as a mandatory respondent in order to qualify for separate rate status.

Use of Facts Available and Adverse Facts Available (AFA)

Section 776(a) of the Act provides that the Department shall apply "facts otherwise available" if: (1) Necessary information is not on the record, or (2) an interested party or any other person (A) withholds information that has been requested, (B) fails to provide information within the deadlines established, or in the form and manner requested by the Department, subject to subsections (c)(1) and (e) of section 782 of the Act, (C) significantly impedes a proceeding, or (D) provides information that cannot be verified as provided by section 782(i) of the Act.

Where the Department determines that a response to a request for information does not comply with the request, section 782(d) of the Act provides that the Department will so inform the party submitting the response and will, to the extent practicable, provide that party the opportunity to remedy or explain the deficiency. If the party fails to remedy the deficiency within the applicable time limits and subject to section 782(e) of the Act, the Department may disregard all or part of the original and subsequent responses, as appropriate.

Section 782(e) of the Act provides that the Department "shall not decline to consider information that is submitted by an interested party and is necessary to the determination but does not meet all applicable requirements established by the administering authority" if the information is timely, can be verified, is not so incomplete that it cannot be used, and if the interested party acted to the best of its ability in providing the information. Where all of these conditions are met, the statute requires the Department to use the information supplied if it can do so without undue difficulties.

Section 776(b) of the Act further provides that the Department may use an adverse inference in applying the facts otherwise available when a party has failed to cooperate by not acting to the best of its ability to comply with a request for information. Such an adverse inference may include reliance on information derived from the petition, the final determination, a previous administrative review, or other information placed on the record.

A. Application of Total Adverse Facts Available to the PRC-Wide Entity

In the *Initiation Notice,* the Department stated that if one of the companies for which this review has been initiated "does not qualify for a separate rate, all other exporters of wooden bedroom furniture from the PRC that have not qualified for a separate rate are deemed to be covered by this review as part of a single PRC entity * * *." As noted above, not all of the companies for which this review was initiated have qualified for a separate rate; as a result, the PRC-wide entity is now under review.

With the exception of Brother Furniture Manufacture Co., Ltd., the companies which we are treating as part of the PRC-wide entity either did not provide shipment information in response to the Department's request for Q&V data, or, in Aosen's case, did not fully respond to the Department's antidumping duty questionnaire. Thus, we preliminarily determine that these companies withheld information requested by the Department. Furthermore, these companies' refusal to participate in the review significantly impeded the proceeding. For example, the Department selected Aosen as a mandatory respondent for which it would have calculated a company-specific dumping margin. Moreover, Aosen's dumping margin would have been averaged with the margin of the other mandatory respondent to calculate the dumping margin assigned to the separate rate respondents. Aosen's refusal to respond to section C and D of the questionnaire prevented the Department from determining its dumping margin. In addition, the other companies' failure to provide shipment information precluded the Department from determining whether or not these companies should be selected as mandatory respondents for which individual dumping margins would be calculated.

Thus, pursuant to section 776(a)(2)(A) and (C) of the Act (withholds requested information and significantly impedes a proceeding), the Department has preliminarily based the dumping margin of the PRC-wide entity on the facts otherwise available on the record. Furthermore, the PRC-wide entity's refusal to provide the requested information constitutes circumstances under which it is reasonable to conclude that less than full cooperation has been shown. *See Nippon Steel Corporation* v. *United States,* 337 F.3d 1373, 1383 (Fed. Cir. 2003) (*Nippon Steel*) where the Court of Appeals for the Federal Circuit provided an explanation of the "failure to act to the best of its ability" standard noting that the Department need not show intentional conduct existed on the part of the respondent, but merely that a "failure to cooperate to the best of a respondent's ability" existed (*i.e.,* information was not provided "under circumstances in which it is reasonable to conclude that less than full cooperation has been shown"). Hence, pursuant to section 776(b) of the Act, the Department has determined that, when selecting from among the facts otherwise available, an adverse inference is warranted with respect to the PRC-wide entity.

B. Application of Partial Adverse Facts Available for Fairmont

At verification we discovered that Fairmont failed to report sales of 24 different models of Hospitality division products that appeared to be sales of subject merchandise.[54] We later confirmed that the sales in question were sales of subject merchandise by examining the engineering diagram for each product.[55] Since Fairmont did not report these sales and the related sales adjustments and did not provide information that would allow the Department to determine normal value for these products as requested by the Department, the information necessary to calculate a dumping margin for these sales is not on the record. Thus, the Department has based the dumping margin for the unreported sales on facts

[54] *See* FDUSA Verification Report.

[55] *See* the Fairmont Analysis Memorandum entitled, "Wooden Bedroom Furniture from the People's Republic of China: Analysis of the Preliminary Results Margin Calculation for Fairmont Designs" (Fairmont Analysis Memorandum), dated February 1, 2010.

available pursuant to section 776(a)(2)(A) of the Act.

Moreover, the Department finds that in not reporting these sales, Fairmont has failed to cooperate by not acting to the best of its ability to comply with a request for information and thus it is appropriate to use an inference that is adverse to Fairmont's interests in selecting from among the facts otherwise available in accordance with section 776(b) of the Act. The Department requested that Fairmont report all U.S. sales and FOP information for subject merchandise sold during the POR.[56] In preparing a response to an inquiry from the Department, it is presumed that a respondent is familiar with its own records.[57] At verification, the verifiers readily identified these unreported sales in Fairmont's records.[58] Moreover, Fairmont acknowledges that most of these sales should have been reported.[59] This indicates that Fairmont did not act to the full extent of its abilities in investigating its records for sales of subject merchandise. Thus, Fairmont failed to act to the best of its ability to comply with the Department's repeated requests for information regarding all of its sales and FOP information for subject merchandise. Therefore, the Department has preliminarily determined to apply AFA to these unreported sales, pursuant to section 776(b) of the Act.

Selection of AFA Rates

A. Total AFA Rate for the PRC-Wide Entity

In deciding which facts to use as AFA, section 776(b) of the Act and 19 CFR 351.308(c)(1) provide that the Department may rely on information derived from (1) the petition, (2) a final determination in the investigation, (3) any previous review or determination, or (4) any information placed on the record. The Department's practice is to select an AFA rate that is sufficiently adverse "as to effectuate the purpose of the facts available rule to induce respondents to provide the Department with complete and accurate information in a timely manner" and that ensures "that the party does not obtain a more favorable result by failing to cooperate than if it had cooperated fully."[60] Specifically, the Department's practice in reviews, in selecting a rate as total AFA, is to use the highest rate on the record of the proceeding which, to the extent practicable, can be corroborated (assuming the rate is based on secondary information).[61] The Court of International Trade (CIT) and the Court of Appeals for the Federal Circuit (Federal Circuit) have affirmed decisions to select the highest margin from any prior segment of the proceeding as the AFA rate on numerous occasions.[62] Therefore, as AFA, the Department has preliminarily assigned the PRC-wide entity a dumping margin of 216.01 percent. This margin, which is from the 2004–2005 new shipper reviews of WBF from the PRC, is the highest dumping margin on the record of any segment of this proceeding.[63]

B. Partial AFA for Fairmont's Unreported Sales

With respect to partial AFA, the Department's practice in reviews, in selecting a rate as partial AFA is to use the highest transaction-specific margin calculated for the respondent in question on a non-aberrational sale subject to the instant review.[64] In this case, we note that Fairmont's U.S. sales database contains an extremely high volume of transactions involving a wide and complex variety of products/models and types of sales. For example, Fairmont sold products as diverse as spare parts of bedroom furniture, armoires, wardrobes, and mirrors. Further, the types of sales are quite varied including sales to retail establishments and hotels. As a result, we believe under these particular circumstances that it is not feasible to apply our traditional methodology. Instead we assigned as partial AFA for the unreported sales the PRC-wide entity a dumping margin of 216.01 percent.

Corroboration of Secondary Information

Section 776(c) of the Act provides that, when the Department relies on secondary information rather than on information obtained in the course of an investigation or review, it shall, to the extent practicable, corroborate that information from independent sources that are reasonably at its disposal. Secondary information is defined as information derived from the petition that gave rise to the investigation or review, the final determination concerning the subject merchandise, or any previous review under section 751 concerning the subject merchandise.[65] Corroborate means that the Department will satisfy itself that the secondary information to be used has probative value.[66] To corroborate secondary information, the Department will, to the extent practicable, examine the reliability and relevance of the information to be used.[67] Independent sources used to corroborate such evidence may include, for example, published price lists, official import statistics and customs data, and information obtained from interested

[56] *See, e.g.,* the Department's letter dated April 20, 2009, at C–1 and D–1.

[57] *See Nippon Steel,* 337 F.3d 1373,1383.

[58] *See* December 30, 2009, memoranda entitled "Verification at Cambium Business Group, Inc. (d.b.a. Fairmont Designs) in the 4th Antidumping Duty Administrative Review of Wooden Bedroom Furniture from the People's Rebublic of China" at 9.

[59] *See* Fairmont's December 4, 2009, submission at 4–8 and Fairmont's December 30, 2009, submission at 3.

[60] *See Notice of Final Determination of Sales at Less than Fair Value: Static Random Access Memory Semiconductors From Taiwan,* 63 FR 8909, 8911 (February 23, 1998); *see also Brake Rotors From the People's Republic of China: Final Results and Partial Rescission of the Seventh Administrative Review; Final Results of the Eleventh New Shipper Review,* 70 FR 69937, 69939 (November 18, 2005) and the SAA at 870.

[61] *See Glycine from the People's Republic of China: Preliminary Results of Antidumping Duty Administrative Review,* 74 FR 15930, 15934 (April 8, 2009) unchanged in *Glycine from the People's Republic of China: Final Results of Antidumping Duty Administrative Review,* 74 FR 41121 (August 14, 2009); *see also Fujian Lianfu Forestry Co., Ltd., a.k.a. Fujian Wonder Pacific Inc., et al.* v. *United States,* 638 F.Supp.2d 1325, 1336 (CIT August 10, 2009) ("Commerce may, of course, begin its total AFA selection process by defaulting to the highest rate in any segment of the proceeding, but that selection must then be corroborated, to the extent practicable.").

[62] *See e.g. NSK Ltd.* v. *United States,* 346 F. Supp. 2d 1312, 1335 (Ct. Int'l Trade 2004) (affirming a 73.55 percent total AFA rate, the highest available dumping margin from a different respondent in the investigation); *Kompass Food Trading International* v. *United States,* 24 CIT 678, 683–84 (2000) (affirming a 51.16 percent total AFA rate, the highest available dumping margin from a different, fully cooperative respondent); and *Shanghai Taoen International Trading Co., Ltd.* v. *United States,* 360 F. Supp. 2d 1339, 1348 (Ct. Int'l Trade 2005) (affirming a 223.01 percent total AFA rate, the highest available dumping margin from a different respondent in a previous administrative review).

[63] *See Wooden Bedroom Furniture from the People's Republic of China: Final Results of the 2004–2005 Semi-Annual New Shipper Reviews,* 71 FR 70739, 70741 (December 6, 2006) (*2004–2005 New Shipper Review*).

[64] *See Ta Chen Stainless Steel Pipe, Inc.* v. *United States,* 24 CIT 841, 846 2000 WL 1225799 (August 25, 2000) and *Ta Chen Stainless Steel Pipe, Inc.* v. *United States,* 298 F. 3d 1330, 1338.

[65] *See SAA* at 870.

[66] *See Id.*

[67] *See Tapered Roller Bearings and Parts Thereof, Finished and Unfinished from Japan, and Tapered Roller Bearings Four Inches or Less in Outside Diameter, and Components Thereof, from Japan: Preliminary Results of Antidumping Duty Administrative Reviews and Partial Termination of Administrative Reviews,* 61 FR 57391, 57392 (November 6, 1996) (unchanged in the final determination); *Final Results of Antidumping Duty Administrative Reviews and Termination in Part: Tapered Roller Bearings and Parts Thereof, Finished and Unfinished from Japan, and Tapered Roller Bearings Four Inches or Less in Outside Diameter, and Components Thereof, from Japan,* 62 FR 11825 (March 13, 1997).

parties during the particular investigation.[68]

The 216.01 AFA rate that the Department is using in this review is a company-specific rate calculated in the *2004–2005 New Shipper Review* of the WBF order.[69] No additional information has been presented in the current review which calls into question the reliability of the information. Thus we have determined this information continues to be reliable.

With respect to the relevance aspect of corroboration, the Department will consider information reasonably at its disposal to determine whether a margin continues to have relevance. Where circumstances indicate that the selected margin is not appropriate as AFA, the Department will disregard the margin and determine an appropriate margin. *See Fresh Cut Flowers from Mexico: Final Results of Antidumping Administrative Review,* 61 FR 6812, 6814 (February 22, 1996) (where the Department disregarded the highest margin in that case as adverse best information available (the predecessor to facts available) because the margin was based on another company's uncharacteristic business expense resulting in an unusually high margin). Similarly, the Department does not apply a margin that has been discredited. *See D&L Supply Co.* v. *United States,* 113 F.3d 1220, 1221 (Fed. Cir. 1997) (ruling that the Department will not use a margin that has been judicially invalidated). To assess the relevancy of the rate used, the Department compared the transaction-specific margins calculated for Fairmont in the instant administrative review with the 216.01 percent rate calculated in the *2004–2005 New Shipper Review.* The Department found that the 216.01 percent margin was within the range of the margins calculated on the record of the instant administrative review. Since the 216.01 percent margin is within the range of transaction-specific margins on the record of this administrative review, the Department has determined that the 216.01 percent margin continues to be relevant for use as an AFA rate for the PRC-wide entity in this administrative review. Also, because this rate is within the range of Fairmont's transaction-specific margins in this review, we preliminarily find the rate relevant as applied to Fairmont's unreported sales.

As the adverse margin is both reliable and relevant, the Department has determined that it has probative value. Accordingly, the Department has determined that this rate meets the corroboration criterion established in section 776(c) of the Act.

Fair Value Comparisons

In accordance with section 777A(d)(2) of the Act, to determine whether Fairmont, a mandatory respondent, sold WBF to the United States at less than NV, we compared the weighted-average export and constructed export price of the WBF to the NV of the WBF, as described in the "U.S. Price," and "Normal Value" sections of this notice.

Export Price

The Department considered the U.S. prices of certain sales by Fairmont to be export prices (EPs) in accordance with section 772(a) of the Act, because these were the prices at which the subject merchandise was first sold before the date of importation by the producer/exporter of the subject merchandise outside of the United States to an unaffiliated purchaser in the United States or to an unaffiliated purchaser for exportation to the United States.

We calculated EPs based on prices to unaffiliated purchaser(s) in the United States. We deducted movement expenses from the gross unit U.S. sales price in accordance with section 772(c)(2)(A) of the Act. These movement expenses include foreign inland freight-plant/warehouse to port of exit, and foreign brokerage and handling. For a detailed description of all adjustments, *see* Fairmont Analysis Memorandum, dated February 1, 2010.

Constructed Export Price

In accordance with section 772(b) of the Act, constructed export price (CEP) is the price at which the subject merchandise is first sold (or agreed to be sold) in the United States before or after the date of importation by or for the account of the producer or exporter of such merchandise or by a seller affiliated with the producer or exporter, to a purchaser not affiliated with the producer or exporter, as adjusted under sections 772(c) and (d) of the Act. We considered sales made by Fairmont's U.S. affiliate in the United States to be CEP sales.

We calculated CEP based on prices to unaffiliated purchasers in the United States. In accordance with section 772(c)(2)(A) and 772(d)(1) and of the Act, where applicable, we made deductions from the starting price for billing adjustments, discounts and rebates, movement expenses, and commissions, credit expenses, inventory carrying costs, factoring expense, warranty expense, and indirect selling expenses which relate to commercial activity in the United States. Movement expenses included, where applicable, foreign inland freight from plant to the port of exportation, foreign brokerage and handling, ocean freight, marine insurance, U.S. inland freight from port to the warehouse, U.S. freight from warehouse to customer, U.S. customs duty, and other U.S. transportation costs. Where applicable, we reduced movement expenses by freight revenue. In addition, we deducted CEP profit from U.S. price in accordance with sections 772(d)(3) and 772(f) of the Act. As a CEP adjustment and in accordance with section 773(a) of the Act, we calculated Fairmont's credit expenses and inventory carrying costs based on the company's short-term interest rate. For a detailed description of all adjustments, *see* Fairmont Analysis Memorandum, dated February 1, 2010.

Normal Value

Section 773(c)(1) of the Act provides that the Department shall determine the NV using an FOP methodology if: (1) The merchandise is exported from an NME country; and (2) the information does not permit the calculation of NV using home-market prices, third-country prices, or constructed value under section 773(e) of the Act. When determining NV in an NME context, the Department will base NV on FOP, because the presence of government controls on various aspects of these economies renders price comparisons and the calculation of production costs invalid under our normal methodologies. Under section 773(c)(3) of the Act, FOP include, but are not limited to: (1) Hours of labor required; (2) quantities of raw materials employed; (3) amounts of energy and other utilities consumed; and (4) representative capital costs. The Department based NV on FOP reported by the respondent for materials, energy, labor and packing.

In accordance with 19 CFR 351.408(c)(1), the Department will normally use publicly-available surrogates to value FOP, but when a producer sources an input from a market economy and pays for it in market economy currency, the Department will normally value the factor using the actual price paid for the input. However, when the Department has reason to believe or suspect that

[68] *See Notice of Preliminary Determination of Sales at Less Than Fair Value: High and Ultra-High Voltage Ceramic Station Post Insulators from Japan,* 68 FR 35627, 35629 (June 16, 2003) (unchanged in final determination); *Notice of Final Determination of Sales at Less Than Fair Value: High and Ultra High Voltage Ceramic Station Post Insulators from Japan,* 68 FR 62560 (November 5, 2003); and *Notice of Final Determination of Sales at Less Than Fair Value: Live Swine From Canada,* 70 FR 12181, 12183–84 (March 11, 2005).

[69] *See 2004–2005 New Shipper Review,* 71 FR at 70741.

such prices may be distorted by subsidies, the Department will disregard the market economy purchase prices and use SVs to determine the NV.[70] Where the facts developed in either U.S. or third-country countervailing duty findings include the existence of subsidies that appear to be used generally (in particular, broadly available, non-industry specific export subsidies), the Department will have reason to believe or suspect that prices of the inputs from the country granting the subsidies may be subsidized.[71]

In avoiding the use of prices that may be subsidized, the Department does not conduct a formal investigation to ensure that such prices are not subsidized, but rather relies on information that is generally available at the time of its determination.[72]

Factor Valuations

In accordance with section 773(c) of the Act, we calculated NV based on FOP reported by respondents for the POR. To calculate NV, the Department multiplied the reported per-unit factor quantities by publicly-available Philippine SVs (except as noted below). In selecting the SV, the Department considered the quality, specificity, and contemporaneity of the data. As appropriate, the Department adjusted input prices by including freight costs to make them delivered prices. Specifically, the Department added to Philippine import SVs a surrogate freight cost using the shorter of the reported distance from the domestic supplier to the respondent's factory or the distance from the nearest seaport to the respondent's factory where appropriate (*i.e.,* where the sales terms for the market-economy inputs were not delivered to the factory). This adjustment is in accordance with the decision of the Federal Circuit in *Sigma Corp.* v. *United States,* 117 F.3d 1401, 1407–08 (Fed. Cir. 1997). Due to the extensive number of SVs it was necessary to assign in this administrative review, we present only a brief discussion of the main factors in this notice. For a detailed description of all SVs used to value the respondents reported FOP, *see* Factor Valuation Memorandum.

Fairmont reported that certain of its reported raw material inputs were sourced from a market-economy country and paid for in market-economy currencies. Pursuant to 19 CFR 351.408(c)(1), when a mandatory respondent sources inputs from a market-economy supplier in meaningful quantities (*i.e.,* not insignificant quantities), we use the actual price paid by respondents for those inputs, except when prices may have been distorted by findings of dumping by the PRC and/or subsidies.[73] Fairmont reported information demonstrating that the quantities of certain raw materials purchased from market-economy suppliers are significant. Where we found market-economy purchases of inputs to be in significant quantities, in accordance with our statement of policy as outlined in *Antidumping Methodologies: Market Economy Inputs,* we have used the actual purchases of these inputs to value the inputs.[74]

Where market-economy purchases of inputs were not made in significant quantities, we used import values for the POR from the Philippines National Statistics Office (Philippines NSO) reported in U.S. dollars on a cost, insurance, and freight (CIF) basis to value the following inputs: processed woods (*e.g.,* particleboard, *etc.*), adhesives and finishing materials (*e.g.,* glue, paints, sealer, lacquer, *etc.*), hardware (*e.g.,* nails, staples, screws, bolts, knobs, pulls, drawer slides, hinges, clasps, *etc.*), other materials (*e.g.,* mirrors, glass, leather, cloth, sponge, *etc.*), and packing materials (*e.g.,* cardboard, cartons, plastic film, labels, tape, *etc.*). The Philippines NSO is the only data source on the record that provides data on a net weight basis, which is the same basis as reported by the respondent in reporting its FOP. For a complete listing of all the inputs and the valuation for each *see* Factor Valuation Memorandum.

Where we could only obtain surrogate values that were not contemporaneous with the POI, we inflated (or deflated) the surrogate values using the Philippine Wholesale Price Index (WPI) as published in the International Financial Statistics of the International Monetary Fund.

Consistent with 19 CFR 351.408(c)(3), we valued labor using the PRC regression-based wage rate as reported on Import Administration's home page, Import Library, Expected Wages of Selected NME Countries, revised in December 2009, available at *http://ia.ita.doc.gov/wages/index.html.* Because this regression-based wage rate does not separate the labor rates into different skill levels or types of labor, we have applied the same wage rate to all skill levels and types of labor reported by the respondent. If the NME wage rates are updated by the Department prior to issuance of the final results, we will use the updated wage rate in the final results. *See* Factor Valuation Memorandum.

We valued electricity using contemporaneous Philippine data from *The Cost of Doing Business in Camarines Sur* available at the Philippine government's Web site for the province: *http://www.camarinessur.gov.ph.* This data pertained only to industrial consumption. *See* Factor Valuation Memorandum.

We calculated the value of domestic brokerage and handling using Philippine data cited in a report compiled and released by the World Bank Group, entitled "Trading Across Borders" and available at *http://www.doingbusiness.org/ExploreTopics/TradingAcrossBorders/Details.aspx?economyid=153.* This was the only surrogate value for brokerage and handling on the record that specifically stated that its costs included amounts for both brokerage and handling.

We calculated the surrogate value for truck freight using Philippine data from two sources: (1) *The Cost of Doing Business in Camarines Sur,* available at the Philippine government's Web site for the province: *http://www.camarinessur.gov.ph;* and (2) a news article from the *Manila Times* entitled "Government Mulls Cut in Export Target."

We calculated the surrogate value for diesel fuel using Philippine data from a Web site entitled Philippine Business available at *http://www.philippinebusiness.com.ph/economic_stats/utilities.htm.*

We calculated the surrogate value for water using Philippine data based on two water utility companies providing service to the Manila metropolitan area: Manila Water (*http://*

[70] *See Tapered Roller Bearings and Parts Thereof, Finished and Unfinished, From the People's Republic of China; Final Results of the 1998–1999 Administrative Review, Partial Rescission of Review, and Determination Not to Revoke Order in Part,* 66 FR 1953 (January 10, 2001) (*TRBs 1998–1999*), and accompanying Issues and Decision Memorandum at Comment 1.

[71] *See TRBs 1998–1999* at Comment 1; *see also Tapered Roller Bearings and Parts Thereof, Finished and Unfinished, From the People's Republic of China; Final Results of 1999–2000 Administrative Review, Partial Rescission of Review, and Determination Not To Revoke Order in Part,* 66 FR 57420 (November 15, 2001), and accompanying Issues and Decision Memorandum at Comment 1; *see also China National Machinery Imp. & Exp. Corp.* v. *United States,* 293 F. Supp. 2d 1334, 1338–39 (Ct. Int'l Trade 2003).

[72] *See* H.R. Rep. 100–576, at 590 (1988), reprinted in 1988 U.S.C.C.A.N. 1547, 1623–24.

[73] *See Antidumping Duties; Countervailing Duties; Final Rule,* 62 FR 27296, 27366 (May 19, 1997).

[74] *See Antidumping Methodologies: Market Economy Inputs, Expected Non-Market Economy Wages, Duty Drawback; and Request for Comments,* 71 FR 61716, 61717 (October 19, 2006) (*Antidumping Methodologies: Market Economy Inputs*); *See also* Fairmont Analysis Memorandum.

www.manilawater.com/downloads/tariff08.pdf) and Maynilad Water Services, Inc. (*http://www.mayniladwater.comph/files/Tariff_effective_Jan012008.pdf*); and also data based on a water utility company covering all of the Philippines outside of Manila: Philippines Local Water Utilities Administration (LUWUA). We averaged all data from the "Manila" service providers and the "outside of Manila" service providers separately and based the surrogate value on an average of the two figures.

We valued factory overhead, selling, general, and administrative expenses (SG&A), and profit, using the audited financial statements for the fiscal year ending December 31, 2008, from the following producers: Tequesta International Inc.; Insular Rattan and Native Products Corp.; Horizon International Manufacturing, Inc.; Arkane International Corporation; and Casa Cebuana Incorada, which are the only Philippine producers of merchandise identical to subject merchandise, received no countervailable subsidies, and earned a before tax profit in 2008 for which we have financial information. From this information, we were able to determine factory overhead as a percentage of the total raw materials, labor and energy (ML&E) costs; SG&A as a percentage of ML&E plus overhead (*i.e.,* cost of manufacture); and the profit rate as a percentage of the cost of manufacture plus SG&A. For further discussion, *see* Factor Valuation Memorandum.

Currency Conversion

We made currency conversions into U.S. dollars, in accordance with section 773A(a) of the Act, based on the exchange rates in effect on the dates of the U.S. sales as certified by the Federal Reserve Bank.

Preliminary Results of Review

We preliminarily determine that the following weighted-average dumping margins exist for the period January 1, 2008 through December 31, 2008:

Exporter	Antidumping duty percent margin
Dongguan Sunrise Furniture Co., Ltd., Taicang Sunrise Wood Industry Co., Ltd., Taicang Fairmount Designs Furniture Co., Ltd., and Meizhou Sunrise Furniture Co., Ltd.*	20.36
Longrange Furniture Co., Ltd.*	20.36
Langfang Tiancheng Furniture Co., Ltd.*	20.36
Shun Feng Furniture Co., Ltd.^	20.36
COE Ltd.^	20.36
Tianjin Fortune Furniture Co., Ltd.*	20.36
Transworld (Zhangzhou) Furniture Co., Ltd.^	20.36
Decca Furniture Ltd., aka Decca^	20.36
Dongguan Landmark Furniture Products, Ltd.^	20.36
Winny Overseas, Ltd.^	20.36
Dongguan Yihaiwei Furniture Limited^	20.36
Baigou Crafts Factory of Fengkai*	20.36
Zhongshan Gainwell Furniture Co., Ltd.*	20.36
PRC-Wide Entity [75]	216.01

Disclosure

The Department will disclose calculations performed for these preliminary results to the parties within five days of the date of publication of this notice in accordance with 19 CFR 351.224(b).

Comments

Interested parties may submit written comments no later than 30 days after the date of publication of these preliminary results of review. *See* 19 CFR 351.309(c)(1)(ii). Rebuttal comments must be limited to the issues raised in the written comments and may be filed no later than 35 days after the date of publication. *See* 19 CFR 351.309(d). Parties submitting written comments or rebuttal are requested to provide the Department with an additional copy of those comments on diskette. Any interested party may request a hearing within 30 days of publication of these preliminary results. *See* 19 CFR 351.310(c). Any hearing, if requested, ordinarily will be held two days after the scheduled date for submission of rebuttal briefs. *See* 19 CFR 351.310(d). Parties should confirm by telephone the date, time, and location of the hearing two days before the scheduled date.

The Department will issue the final results of the administrative review, which will include the results of its analysis of issues raised in the briefs, within 120 days of publication of these preliminary results, in accordance with 19 CFR 351.213(h)(1) unless the time limit is extended.

Assessment Rates

Pursuant to 19 CFR 351.212, the Department will determine, and CBP shall assess, antidumping duties on all appropriate entries of subject merchandise in accordance with the final results of this review. For assessment purposes, the Department calculated exporter/importer- (or customer) -specific assessment rates for merchandise subject to this review. Where appropriate, the Department calculated an *ad valorem* rate for each importer (or customer) by dividing the total dumping margins for reviewed sales to that party by the total entered values associated with those transactions. For duty-assessment rates calculated on this basis, the Department will direct CBP to assess the resulting *ad valorem* rate against the entered customs values for the subject merchandise. Where appropriate, the Department calculated a per-unit rate for each importer (or customer) by dividing the total dumping margins for reviewed sales to that party by the total sales quantity associated with those transactions. For duty-assessment rates calculated on this basis, the Department will direct CBP to assess the resulting per-unit rate against the entered quantity of the subject merchandise. Where an importer- (or customer) -specific assessment rate is *de minimis* (*i.e.,* less than 0.50 percent), the Department will instruct CBP to assess that importer (or customer's) entries of subject merchandise without regard to antidumping duties. The Department intends to instruct CBP to liquidate entries containing subject merchandise exported by the PRC-wide entity at the PRC-wide rate we determine in the final results of this review. The Department intends to issue appropriate assessment

[75] The mandatory respondent Aosen is part of the PRC-wide entity.

instructions directly to CBP 15 days after publication of the final results of this review.

Cash Deposit Requirements

The following cash deposit requirements will be effective upon publication of the final results of these reviews for shipments of subject merchandise from the PRC entered, or withdrawn from warehouse, for consumption on or after the publication date, as provided by sections 751(a)(1) and (a)(2)(C) of the Act: (1) For all respondents receiving a separate rate, the cash deposit rate will be that established in the final results of these reviews; (2) for previously investigated or reviewed PRC and non-PRC exporters not listed above that have separate rates, the cash deposit rate will continue to be the exporter-specific rate published for the most recent period; (3) for all PRC exporters of subject merchandise that have not been found to be entitled to a separate rate, the cash deposit rate will be the PRC-wide rate of 216.01 percent; and (4) for all non-PRC exporters of subject merchandise which have not received their own rate, the cash deposit rate will be the rate applicable to the PRC exporters that supplied that non-PRC exporter. These deposit requirements, when imposed, shall remain in effect until further notice.

Notification to Importers

This notice also serves as a preliminary reminder to importers of their responsibility under 19 CFR 351.402(f) to file a certificate regarding the reimbursement of antidumping duties prior to liquidation of the relevant entries during this review period. Failure to comply with this requirement could result in the Secretary's presumption that reimbursement of antidumping duties occurred and the subsequent assessment of double antidumping duties.

The Department is issuing and publishing these preliminary results of administrative review in accordance with section 777(i)(1) of the Act, and 19 CFR 351.221(b)(4).

Dated: February 1, 2010.

Carole Showers,

Acting Deputy Assistant Secretary for Policy and Negotiations.

[FR Doc. 2010–2590 Filed 2–4–10; 8:45 am]

BILLING CODE 3510–DS–P

DEPARTMENT OF COMMERCE

International Trade Administration

[A–583–833]

Certain Polyester Staple Fiber From Taiwan: Preliminary Results of Antidumping Duty Administrative Review

AGENCY: Import Administration, International Trade Administration, Department of Commerce

SUMMARY: The Department of Commerce (the Department) is conducting an administrative review of the antidumping duty order on certain polyester staple fiber (PSF) from Taiwan. The period of review is May 1, 2008, through April 30, 2009. This review covers imports of certain polyester staple fiber from one producer/exporter. We have preliminarily found that sales of the subject merchandise have been made below normal value. If these preliminary results are adopted in our final results, we will instruct U.S. Customs and Border Protection (CBP) to assess antidumping duties on all appropriate entries. Interested parties are invited to comment on these preliminary results. We will issue the final results not later than 120 days after the date of publication of this notice.

EFFECTIVE DATE: February 5, 2010.

FOR FURTHER INFORMATION CONTACT: Michael A. Romani or Richard Rimlinger, AD/CVD Operations, Office 5, Import Administration, International Trade Administration, U.S. Department of Commerce, 14th Street and Constitution Avenue, NW, Washington DC 20230; telephone (202) 482–0198 or (202) 482–4477, respectively.

SUPPLEMENTARY INFORMATION:

Background

On June 24, 2009, the Department published a notice initiating an administrative review of the antidumping duty order on certain PSF from Taiwan covering the respondents Far Eastern Textiles Ltd. (FET) and Nan Ya Plastics Corporation (Nan Ya). *See Initiation of Antidumping and Countervailing Duty Administrative Reviews and Requests for Revocation in Part*, 74 FR 30052 (June 24, 2009). We have rescinded the review with respect to Nan Ya. *See Polyester Staple Fiber from Taiwan: Rescission of Antidumping Duty Administrative Review in Part*, 74 FR 41684 (August 18, 2009).

Scope of the Order

The product covered by the order is PSF. PSF is defined as synthetic staple fibers, not carded, combed or otherwise processed for spinning, of polyesters measuring 3.3 decitex (3 denier, inclusive) or more in diameter. This merchandise is cut to lengths varying from one inch (25 mm) to five inches (127 mm). The merchandise subject to the order may be coated, usually with a silicon or other finish, or not coated. PSF is generally used as stuffing in sleeping bags, mattresses, ski jackets, comforters, cushions, pillows, and furniture. Merchandise of less than 3.3 decitex (less than 3 denier) currently classifiable in the *Harmonized Tariff Schedule of the United States* (HTSUS) at subheading 5503.20.00.20 is specifically excluded from the order. Also specifically excluded from the order are polyester staple fibers of 10 to 18 denier that are cut to lengths of 6 to 8 inches (fibers used in the manufacture of carpeting). In addition, low–melt PSF is excluded from this order. Low–melt PSF is defined as a bi–component fiber with an outer sheath that melts at a significantly lower temperature than its inner core.

The merchandise subject to this order is currently classifiable in the HTSUS at subheadings 5503.20.00.45 and 5503.20.00.65. Although the HTSUS subheadings are provided for convenience and customs purposes, the written description of the merchandise subject to the order is dispositive.

Fair–Value Comparisons

To determine whether FET's sales of PSF to the United States were made at less than normal value, we compared export price to normal value as described in the "Export Price" and "Normal Value" sections of this notice.

Pursuant to section 777A(d)(2) of the Tariff Act of 1930, as amended (the Act), we compared the export price of individual U.S. transactions to the monthly weighted–average normal value of the foreign like product where there were sales made in the ordinary course of trade, as discussed in the "Cost of Production" section below.

Product Comparisons

We compared U.S. sales to monthly weighted–average prices of contemporaneous sales made in the home market. We found contemporaneous sales of identical merchandise in the home market for all U.S. sales in accordance with section 771(16) of the Act.

Date of Sale

Section 351.401(i) of the Department's regulations states that the Department normally will use the date of invoice, as recorded in the producer's or exporter's

records kept in the ordinary course of business, as the date of sale. The regulation provides further that the Department may use a date other than the date of the invoice if the Secretary is satisfied that a different date better reflects the date on which the material terms of sale are established. The Department has a long–standing practice of finding that, where shipment date precedes invoice date, shipment date better reflects the date on which the material terms of sale are established. *See Notice of Final Determination of Sales at Less Than Fair Value and Negative Final Determination of Critical Circumstances: Certain Frozen and Canned Warmwater Shrimp From Thailand*, 69 FR 76918 (December 23, 2004), and accompanying Issues and Decision Memorandum at Comment 10; see also *Notice of Final Determination of Sales at Less Than Fair Value: Structural Steel Beams From Germany*, 67 FR 35497 (May 20, 2002), and accompanying Issues and Decision Memorandum at Comment 2.

With respect to FET's U.S. market sales, shipment date occurs on or before the date of invoice. The date of invoice is the date on which the Government Uniform Invoice is issued. Further, based on record evidence, all material terms of sale are established at the time of shipment and do not change in the subsequent time prior to the issuance of the invoice. Therefore, we used the date of shipment as the date of sale in accordance with our practice.

With respect to most of FET's home–market sales, shipment date occurs on or before the invoice date. Further, based on record evidence, all material terms of sale are established at the time of shipment and do not change in the subsequent time prior to the issuance of the invoice. We note that FET had some home–market sales in which invoice dates preceded shipment dates; for these home–market sales, we used the invoice date as the date of sale in accordance with our practice. For all other home–market sales, we used shipment date as date of sale.

Export Price

For sales to the United States, we calculated export price in accordance with section 772(a) of the Act because the merchandise was sold prior to importation by the exporter or producer outside the United States to the first unaffiliated purchaser in the United States and because constructed export–price methodology was not otherwise warranted. We calculated export price based on the free–on-board price to unaffiliated purchasers in the United States. Where appropriate, we made deductions, consistent with section 772(c)(2)(A) of the Act, for the following movement expenses: inland freight from the plant to the port of exportation, inland insurance in Taiwan, brokerage and handling, harbor service fees, trade promotion fees, and containerization expenses. No other adjustments were claimed or allowed.

Normal Value

Selection of Comparison Market

To determine whether there was a sufficient volume of sales of PSF in the home market to serve as a viable basis for calculating normal value, we compared the volume of the respondent's home–market sales of the foreign like product to its volume of U.S. sales of the subject merchandise in accordance with section 773(a) of the Act. Pursuant to section 773(a)(1)(B) of the Act, because the respondent's aggregate volume of home–market sales of the foreign like product was greater than five percent of its aggregate volume of U.S. sales of the subject merchandise, we determined that the home market was viable for comparison purposes.

Cost of Production

We disregarded below–cost sales by FET in the last administrative review of the order completed prior to the initiation of this review. See *Certain Polyester Staple Fiber From Taiwan: Final Results of Antidumping Duty Administrative Review*, 74 FR 18348 (April 22, 2009); see also *Certain Polyester Staple Fiber From Taiwan: Preliminary Results of Antidumping Duty Administrative Review*, 74 FR 6136, 6137–38 (February 5, 2009). Therefore, pursuant to section 773(b)(2)(A)(ii) of the Act, there were reasonable grounds to believe or suspect that the respondent made sales of the foreign like product in its comparison market at prices below the cost of production within the meaning of section 773(b) of the Act.

We calculated the cost of production on a product–specific basis, based on the sum of the respondent's costs of materials and fabrication for the foreign like product plus amounts for general and administrative expenses, interest expenses, and the costs of all expenses incidental to preparing the foreign like product for shipment in accordance with section 773(b)(3) of the Act.

We relied on cost–of-production information FET submitted in its response to our cost questionnaire except we adjusted FET's reported cost of manufacturing to account for purchases of purified terephthalic acid and monoethylene glycol from affiliated parties at non–arm's–length prices in accordance with the major–input rule of section 773(f)(3) of the Act.

On a product–specific basis, we compared the adjusted weighted–average cost–of-production figures for the period of review to the home–market sales of the foreign like product, as required under section 773(b) of the Act, to determine whether these sales were made at prices below the cost of production. The prices were exclusive of any applicable movement charges, packing expenses, warranties, and indirect selling expenses. In determining whether to disregard home–market sales made at prices below their cost of production and in accordance with sections 773(b)(2)(B), (C), and (D) of the Act, we examined whether such sales were made within an extended period of time in substantial quantities and at prices which permitted the recovery of all costs within a reasonable period of time.

We found that, for certain products, more than 20 percent of the respondent's home–market sales were at prices below the cost of production and, in addition, the below–cost sales were made within an extended period of time in substantial quantities. In addition, these sales were made at prices that did not permit the recovery of costs within a reasonable period of time. Therefore, we disregarded these sales and used the remaining sales of the same product as the basis for determining normal value in accordance with section 773(b)(1) of the Act.

Calculation of Normal Value

We calculated normal value based on the price FET reported for home–market sales to unaffiliated customers which we determined were within the ordinary course of trade. We made adjustments for differences in domestic and export packing expenses in accordance with sections 773(a)(6)(A) and 773(a)(6)(B)(i) of the Act. We also made adjustments, consistent with section 773(a)(6)(B)(ii) of the Act, for inland–freight expenses from the plant to the customer and expenses associated with loading the merchandise onto the truck to be shipped. In addition, we made adjustments for differences in circumstances of sale in accordance with section 773(a)(6)(C)(iii) of the Act and 19 CFR 351.410. We made these adjustments, where appropriate, by deducting direct selling expenses incurred on home–market sales (*i.e.*, imputed credit expenses and warranties) and adding U.S. direct selling expenses (*i.e.*, imputed credit expenses and bank charges).

In addition, FET reported one transaction in its home–market sales database for which it acknowledged it had reason to know would be exported to the People's Republic of China. See FET's December 23, 2009, response to our supplemental questionnaire. Because FET knew or had reason to know at the time of sale that this transaction was destined for export, we removed it from our calculation of normal value in accordance with section 773(a)(1)(C) of the Act.

Level of Trade

In accordance with section 773(a)(1)(B) of the Act, to the extent practicable, we determine normal value based on sales in the comparison market at the same level of trade as the export price. Pursuant to 19 CFR 351.412(c)(1), the normal–value level of trade is based on the starting price of the sales in the comparison market or, when normal value is based on constructed value, the starting price of the sales from which we derive selling, general, and administrative expenses and profit. For export–price sales, the U.S. level of trade is based on the starting price of the sales in the U.S. market, which is usually from the exporter to the importer.

To determine whether comparison–market sales are at a different level of trade than export–price sales, we examine stages in the marketing process and selling functions along the chain of distribution between the producer and the unaffiliated customer. See 19 CFR 351.412(c)(2). If the comparison–market sales are at a different level of trade and the difference affects price comparability, as manifested in a pattern of consistent price differences between the sales on which normal value is based and the comparison–market sales at the level of trade of the export transaction, we make a level–of-trade adjustment under section 773(a)(7)(A) of the Act.

In this review, we obtained information from FET regarding the marketing stages involved in making its reported home–market and U.S. sales for each channel of distribution. FET reported one channel of distribution (*i.e.*, direct sales to distributers) and a single level of trade in the U.S. market. For purposes of these preliminary results, we have organized the common selling functions into four major categories: sales process and marketing support, freight and delivery, inventory and warehousing, and quality assurance/warranty services. Because the sales process and selling functions FET performed for selling to the U.S. market did not vary by individual customers, the necessary condition for finding they constitute different levels of trade was not met. Accordingly, we determined that all of FET's U.S. sales constituted a single level of trade.

FET reported a single channel of distribution (*i.e.*, direct sales to end–users) and a single level of trade in the home market. Because the sales process and selling functions FET performed for selling to home–market customers did not vary by individual customers, we determined that all of FET's home–market sales constituted a single level of trade.

We found that the export–price level of trade was similar to the home–market level of trade in terms of selling activities. Specifically, the levels of expense were similar for the selling functions FET provided in both markets. Accordingly, we considered the export–price level of trade to be similar to the home–market level of trade and not at a different stage of distribution than the home–market level of trade. Therefore, we matched export–price sales to sales at the same level of trade in the home market and no level–of-trade adjustment under section 773(a)(7)(A) of the Act is necessary.

Preliminary Results of the Review

As a result of this review, we preliminarily determine that a dumping margin of 2.11 percent exists for FET for the period May 1, 2008, through April 30, 2009.

Public Comment

We will disclose the documents resulting from our analysis to parties in this review within five days of the date of publication of this notice. See 19 CFR 351.224(b). Any interested party may request a hearing within 30 days of the publication of this notice in the **Federal Register**. See 19 CFR 351.310(c). If a hearing is requested, the Department will notify interested parties of the hearing schedule.

Interested parties are invited to comment on the preliminary results of this review. Interested parties may submit case briefs within 30 days of the date of publication of this notice. Rebuttal briefs, which must be limited to issues raised in the case briefs, may be filed not later than 35 days after the date of publication of this notice. Parties who submit case briefs or rebuttal briefs in this review are requested to submit with each argument (1) a statement of the issue and (2) a brief summary of the argument with an electronic version included.

We intend to issue the final results of this review, including the results of our analysis of issues raised in any submitted written comments, within 120 days after publication of this notice.

Assessment Rates

The Department shall determine, and CBP shall assess, antidumping duties on all appropriate entries. Although FET indicated that it was not the importer of record for any of its sales to the United States during the period of review, it reported the name of the importer of record for all of its U.S. sales. Because FET reported the entered value for all of its U.S. sales and in accordance with 19 CFR 351.212(b)(1), we have calculated an importer–specific assessment rate for the merchandise in question by aggregating the dumping margins we calculated for all U.S. sales to the importer and dividing this amount by the total entered value of those sales. We intend to issue instructions to CBP 15 days after publication of the final results of this review.

The Department clarified its "automatic assessment" regulation on May 6, 2003. See *Antidumping and Countervailing Duty Proceedings: Assessment of Antidumping Duties*, 68 FR 23954 (May 6, 2003) (*Assessment Clarification*). This clarification will apply to entries of subject merchandise during the period of review produced by FET for which it did not know its merchandise was destined for the United States. In such instances, we will instruct CBP to liquidate un–reviewed entries at the all–others rate if there is no rate for the intermediate company(ies) involved in the transaction. For a full discussion of this clarification, see *Assessment Clarification*.

Cash–Deposit Requirements

The following deposit requirements will be effective upon publication of the notice of final results of administrative review for all shipments of PSF from Taiwan entered, or withdrawn from warehouse, for consumption on or after the date of publication as provided by section 751(a)(2) of the Act: (1) the cash–deposit rate for FET will be the rate established in the final results of this administrative review; (2) for merchandise exported by manufacturers or exporters not covered in this review but covered in a prior segment of the proceeding, the cash–deposit rate will continue to be the company–specific rate published for the most recent period; (3) if the exporter is not a firm covered in this review, a prior review, or the original investigation but the manufacturer is, the cash–deposit rate will be the rate established for the most recent period for the manufacturer of the merchandise; (4) if neither the

exporter nor the manufacturer is a firm covered in this review, the cash–deposit rate will be 7.31 percent, the all–others rate established in *Notice of Amended Final Determination of Sales at Less Than Fair Value: Certain Polyester Staple Fiber From the Republic of Korea and Antidumping Duty Orders: Certain Polyester Staple Fiber From the Republic of Korea and Taiwan*, 65 FR 33807 (May 25, 2000).

Notification to Importers

This notice also serves as a preliminary reminder to importers of their responsibility under 19 CFR 351.402(f)(2) to file a certificate regarding the reimbursement of antidumping duties prior to liquidation of the relevant entries during this review period. Failure to comply with this requirement could result in the Secretary's presumption that reimbursement of antidumping duties occurred and the subsequent assessment of double antidumping duties.

We are issuing and publishing these results in accordance with sections 751(a)(1) and 777(i)(1) of the Act.

Dated: February 1, 2010.

Carole A. Showers,

Acting Deputy Assistant Secretary for Policy and Negotiations.

[FR Doc. 2010–2593 Filed 2–4–04; 8:45 am]

BILLING CODE 3510–DS–S

COMMITTEE FOR PURCHASE FROM PEOPLE WHO ARE BLIND OR SEVERELY DISABLED

Procurement List; Additions and Deletions

AGENCY: Committee for Purchase From People Who Are Blind or Severely Disabled.

ACTION: Additions to and Deletions from Procurement List.

SUMMARY: This action adds to the Procurement List products and services to be furnished by nonprofit agencies employing persons who are blind or have other severe disabilities, and deletes from the Procurement List products and services previously furnished by such agencies.

DATES: *Effective Date:* March 8, 2010.

ADDRESSES: Committee for Purchase From People Who Are Blind or Severely Disabled, Jefferson Plaza 2, Suite 10800, 1421 Jefferson Davis Highway, Arlington, Virginia, 22202–3259.

FOR FURTHER INFORMATION CONTACT: Barry S. Lineback, Telephone: (703) 603–7740, Fax: (703) 603–0655, or email *CMTEFedReg@AbilityOne.gov*.

SUPPLEMENTARY INFORMATION:

Additions

On 12/4/2009 (74 FR 63732) and 12/11/2009 (74 FR 65758–65760), the Committee for Purchase From People Who Are Blind or Severely Disabled published notices of proposed additions to the Procurement List.

After consideration of the material presented to it concerning capability of qualified nonprofit agencies to provide the products and services and impact of the additions on the current or most recent contractors, the Committee has determined that the products and services listed below are suitable for procurement by the Federal Government under 41 U.S.C. 46–48c and 41 CFR 51–2.4.

Regulatory Flexibility Act Certification

I certify that the following action will not have a significant impact on a substantial number of small entities. The major factors considered for this certification were:

1. The action will not result in any additional reporting, recordkeeping or other compliance requirements for small entities other than the small organizations that will furnish the products and services to the Government.

2. The action will result in authorizing small entities to furnish the products and services to the Government.

3. There are no known regulatory alternatives which would accomplish the objectives of the Javits-Wagner-O'Day Act (41 U.S.C. 46–48c) in connection with the products and services proposed for addition to the Procurement List.

End of Certification

Accordingly, the following products and services are added to the Procurement List:

Products

NSN: 7220–00–NIB–0382—36″x72″ Finger-tip Mat, Heavy-duty, Black
NSN: 7220–00–NIB–0372—4x6′ Vinyl Loop Scraper Mat, Gray
NSN: 7220–00–NIB–0377—3x5′ Loop-twist Outdoor Scraper Mat, Gray
NSN: 7220–00–NIB–0383—3x5′ Wiper/Scraper Mat, Medium Duty, Recycled PET, Gray
NSN: 7220–00–NIB–0391—3x5′ Indoor Wiper Mat, Recycled PET, Gray
NSN: 7220–00–NIB–0397—2x3′ Ribbed Vinyl Anti-fatigue mat, Gray
NSN: 7220–00–NIB–0399—2x3′ Industrial deck-plate, Anti-fatigue Mat, Black
Coverage: A–List for the total government requirement as aggregated by the General Services Administration
NSN: 7220–00–NIB–0398—3x5′ Ribbed Vinyl Anti-fatigue mat, Gray
NSN: 7220–00–NIB–0400—3x5′ Industrial deck-plate, Anti-fatigue Mat, Black
NSN: 7220–00–NIB–0402—2x3′ Industrial deck-plate, Anti-fatigue Mat, Black
NSN: 7220–00–NIB–0403—3x5′ Industrial deck-plate, Anti-fatigue Mat, Black
NSN: 7220–00–NIB–0411—2x3′ Anti-fatigue Mat, Recycled content, Gray
NSN: 7220–00–NIB–0412—3x5′ Anti-fatigue Mat, Recycled content, Gray
NSN: 7220–00–NIB–0384—4x6′ Wiper/Scraper Mat, Medium Duty, Recycled PET, Gray
NSN: 7220–00–NIB–0378—4x6′ Loop-twist Outdoor Scraper Mat, Gray
NSN: 7220–00–NIB–0392—4x6′ Indoor Wiper Mat, Recycled PET, Gray
NSN: 7220–00–NIB–0369—3x5′ Vinyl Loop Scraper Mat, Black
NSN: 7220–00–NIB–0370—4x6′ Vinyl Loop Scraper Mat, Black
NSN: 7220–00–NIB–0375—24″x32″ Finger-tip Mat, Medium-duty, Black
NSN: 7220–00–NIB–0376—36″x72″ Finger-tip Mat, Medium-duty, Black
NSN: 7220–00–NIB–0381—23″x32″ Finger-tip Mat, Heavy-duty, Black
Coverage: B–List for the broad government requirement as aggregated by the General Services Administration
NPA: Wiscraft Inc.—Wisconsin Enterprises for the Blind, Milwaukee, WI
Contracting Activity: Federal Acquisition Service, GSA/FAS Southwest Supply Center (QSDAC), Fort Worth, TX

Services

Service Type/Locations: Document Destruction Service
NPA: NISH (Prime Contractor)
Contracting Activity: Dept Of The Treasury/Internal Revenue Service, Washington, DC
I.R.S. Offices at the following locations:
2385 CHAMBLEE TUCKER ROAD, CHAMBLEE, GA
J GORDON LOW BLDG: 120 BARNARD ST, SAVANNAH, GA
401 W PEACHTREE ST, ATLANTA, GA
600 EAST FIRST ST, ROME, GA
RICHARD B. RUSSELL FB: 75 SPRING ST, ATLANTA, GA
R. G. STEPHENS JR FB: 355 HANCOCK AVENUE, ATHENS, GA
4800 BUFORD HIGHWAY, CHAMBLEE, GA
NE KOGER: 2888 WOODCOCK BLVD, ATLANTA, GA
SNAPFINGER TECH: 5240 SNAPFINGER PARK DR, DECATUR, GA
2970 BRANDYWINE RD, ATLANTA, GA
2980 BRANDYWINE RD, ATLANTA, GA
ATSC TRAINING: 2965 FLOWERS RD, CHAMBLEE, GA
2400 HERODIAN WAY, SMYRNA, GA
FIRST FEDERAL PLAZA: 777 GLOUCESTER ST, BRUNSWICK, GA
2743 PERIMETER PKWY, AUGUSTA, GA
233 PEACHTREE ST, ATLANTA, GA
6655 PEACHTREE DUNWOODY RD NE, ATLANTA, GA
329 OAK STREET, GAINESVILLE, GA
1008 PROFESSIONAL BLVD., DALTON, GA
6600 BAY CIRCLE, NORCROSS, GA
640 NORTH AVENUE, MACON, GA
33 E. TWOHIG AVE, SAN ANGELO, TX

6801 SANGER AVE, WACO, TX
5219 MCPHERSON RD, LAREDO, TX
601 NW LOOP 410 ACCESS RD, SAN ANTONIO, TX
415 S. FIRST STREET, LUFKIN, TX
216 W. 26TH STREET, BRYAN, TX
3525 NORTHEAST PARKWAY, SAN ANTONIO, TX
8700 TESORO DRIVE, SAN ANTONIO, TX
1205 TEXAS AVE, LUBBOCK, TX
100 N. E. LOOP 410, SAN ANTONIO, TX
NPA (Subcontractor): Austin Task, Inc., Austin, TX
915 LAFAYETTE BLVD, BRIDGEPORT, CT
131 WEST STREET, DANBURY, CT
333 EAST RIVER DRIVE, EAST HARTFORD, CT
COTTER FB: 135 HIGH STREET, HARTFORD, CT
GAIAMO FB: 150 COURT ST., NEW HAVEN, CT
24 BELDEN AVE, NORWALK, CT
14 COTTAGE PLACE, WATERBURY, CT
936 SILAS DEANE HIGHWAY, WETHERSFIELD, CT
NPA (Subcontractor): Easter Seals Greater Hartford Rehabilitation Center, Inc., Windsor, CT
2120 CAPITOL AVE, CHEYENNE, WY
THOMAS P. O'NIELL, JR FB: 10 CAUSEWAY ST, BOSTON, MA
MAIN & EAST ELM ST, BROCKTON, MA
PHILIP J PHILBIN FB: 881 MAIN STREET, FITCHBURG, MA
900 CHELMSFORD STREET, LOWELL, MA
118 TURNPIKE ROAD, SOUTHBOROUGH, MA
120 FRONT STREET, WORCESTER, MA
380 WESTMINSTER ST, PROVIDENCE, RI
60 QUAKER LANE, WARWICK, RI
1250 HANCOCK STREET, QUINCY, MA
NPA (Subcontractor): Cranston Arc, Cranston, RI
29 NORTH WACKER DRIVE, CHICAGO, IL
211 S COURT STREET, ROCKFORD, IL
5100 RIVER RD., SCHILLER PARK, IL
NPA (Subcontractor): Glenkirk, Northbrook, IL
2 SOUTH MAIN STREET, AKRON, OH
201 CLEVELAND AVE SW, CANTON, OH
1240 E NINTH STREET, CLEVELAND, OH
1375 E NINTH STREET, CLEVELAND, OH
208 PERRY ST, DEFIANCE, OH
5990 W CREEK ROAD, INDEPENDENCE, OH
401 WEST NORTH STREET, LIMA, OH
300 BROADWAY, LORAIN, OH
180 N DIAMOND ST, MANSFIELD, OH
8 NORTH STATE STREET, PAINESVILLE, OH
500 MARKET STREET, STEUBENVILLE, OH
433 NORTH SUMMIT ST, TOLEDO, OH
YOUNGSTOWN FB: 10 EAST COMMERCE ST., YOUNGSTOWN, OH
220 SOUTH MAIN STREET, BUTLER, PA
4314 OLD WILLIAM PENN HIGHWAY, MONROEVILLE, PA
1000 LIBERTY AVE., PITTSBURGH, PA
547 KEYSTONE DRIVE, WARRENDALE, PA
162 WEST CHESTNUT STREET, WASHINGTON, PA
NPA (Subcontractor): Weaver Industries, Inc., Akron, OH
505 S. MAIN ST, LAS CRUCES, NM
NPA (Subcontractor): Adelante Development Center, Inc., Albuquerque, NM
625 N. AKERS ST, VISALIA, CA
NPA (Subcontractor): Arc Fresno, Inc., Fresno, CA
3971 RESEARCH PARK DRIVE, ANN ARBOR, MI
22600 HALL ROAD, CLINTON TOWNSHIP, MI
477 MICHIGAN AVE, DETROIT, MI
985 MICHIGAN AVENUE, DETROIT, MI
3100 WEST ROAD, EAST LANSING, MI
38275 WEST TWELVE MILE ROAD, FARMINGTON HILLS, MI
815 S. SAGINAW ST, FLINT, MI
234 LOUIS GLICK HWY, JACKSON, MI
1270 PONTIAC RD, PONTIAC, MI
4901 TOWNE CENTRE RD, SAGINAW, MI
NPA (Subcontractor): The Arc of St. Clair County, Port Huron, MI
300 SOUTH NEW STREET, DOVER, DE
21309 BERLIN ROAD, GEORGETOWN, DE
1352 MARROWS ROAD, NEWARK, DE
844 KING STREET, WILMINGTON, DE
190 ADMIRAL COCHRANE DRIVE, SUITE 170, ANNAPOLIS, MD
31 HOPKINS PLAZA, BALTIMORE, MD
212 WEST MAIN STREET, SALISBURY, MD
NATIONAL OFFICE: 1111 CONSTITUTION AVE NW., WASHINGTON, DC
500 N CAPITOL ST, WASHINGTON, DC
820 FIRST ST., NE, WASHINGTON, DC
1099 14TH STREET NW., WASHINGTON, DC
1099 14TH STREET NW., WASHINGTON, DC
1750 PENNSYLVANIA AVENUE, WASHINGTON, DC
US MINT ANNEX: 799 9TH STREET, WASHINGTON, DC
US MINT: 801 9th STREET, NW., WASHINGTON, DC
201 THOMAS JOHNSON DR, FREDERICK, MD
14701 NATIONAL HWY SW, FROSTBURG, MD
1260 MARYLAND AVENUE, HAGERSTOWN, MD
2345 CRYSTAL DR, STE 400, ARLINGTON, VA
5205 LEESBURG PIKE, BAILEYS CROSSROADS, VA
11166 FAIRFAX BLVD, FAIRFAX, VA
8100 CORPORATE DRIVE, HYATTSVILLE, MD
8401 CORPORATE DRIVE, LANDOVER, MD
5000 ELLIN RD, LANHAM/SEABROOK, MD
6009 OXON HILL, OXON HILL, MD
11510 GEORGIA AVENUE, WHEATON, MD
100 S. CHARLES STREET, BALTIMORE, MD
120 CHARLES STREET, BALTIMORE, MD
NPA (Subcontractor): Athelas Institute, Inc., Columbia, MD
200 W. PROFESSIONAL PARK CT., BOWLING GREEN, KY
225 E. PEACHTREE ST, CORBIN, KY
7940 KENTUCKY DRIVE, FLORENCE, KY
5 SPIRAL DRIVE, FLORENCE, KY
7125 INDUSTRIAL RD, FLORENCE, KY
10 SPIRAL DRIVE, FLORENCE, KY
121 W TENTH STREET, HOPKINSVILLE, KY
1500 LEESTOWN RD, LEXINGTON, KY
LOU MAZZOLI FB: 600 MARTIN LUTHER KING JR. PLACE, LOUISVILLE, KY
1500 ORMSBY STATION COURT, LOUISVILLE, KY
401 FREDERICA STREET, OWENSBORO, KY
2765 WAYNE SULLIVAN DRIVE, PADUCAH, KY
311 NORTH ARNOLD AVENUE, PRESTONSBURG, KY
300 MADISON AVE, FLORENCE, KY
462 SOUTH 4TH STREET, LOUISVILLE, KY
NPA (Subcontractor): Employment Solutions, Inc., Lexington, KY
233 EAST 84TH DRIVE, MERRILLVILLE, IN
ONE MICHIANA SQUARE, SOUTH BEND, IN
777 RIVERVIEW DRIVE, BENTON HARBOR, MI
678 FRONT STREET NW., GRAND RAPIDS, MI
8075 CREEKSIDE DRIVE, PORTAGE, MI
3251 N EVERGREEN DR NE, GRAND RAPIDS, MI
NPA (Subcontractor): Gateway, Berrien Springs, MI
PRINCE KUHIO FB: 300 ALA MOANA BLVD, HONOLULU, HI
2050 MAIN STREET, WAILUKU, HI
NPA (Subcontractor): Goodwill Contract Services of Hawaii, Inc., Honolulu, HI
600 E. HARRISON ST., BROWNSVILLE, TX
555 NORTH CARANCAHUA ST, CORPUS CHRISTI, TX
320 N MAIN ST, MC ALLEN, TX
M L KING JR FB: 312 SOUTH MAIN STREET, VICTORIA, TX
NPA (Subcontractor): Goodwill Industries of South Texas, Inc., Corpus Christi, TX
1901B E CAPITOL DR, APPLETON, WI
440 SECURITY BLVD, GREEN BAY, WI
20 E MILWAUKEE ST. STE 204, JANESVILLE, WI
545 ZOR SHRINE PL, MADISON, WI
515 S. WASHBURN STREET, OSHKOSH, WI
2108 KOHLER MEMORIAL DR., SHEBOYGAN, WI
NPA (Subcontractor): Goodwill Industries of Southeastern Wisconsin, Inc., Milwaukee, WI
611 6TH ST, LOS ANGELES, CA
950 HAMPSHIRE ROAD, THOUSAND OAKS, CA
NPA: Goodwill Industries of Southern California, Los Angeles, CA
520 112TH AVENUE NE, BELLEVUE, WA
3020 RUCKER AVE, EVERETT, WA
402 LEGION WAY SE, OLYMPIA, WA
800 5TH AVE, SEATTLE, WA
1201 PACIFIC AVENUE, TACOMA, WA
NPA (Subcontractor): Northwest Center, Seattle, WA
12 CADILLAC DR., STE 400, BRENTWOOD, TN
5740 UPTAIN RD, CHATTANOOGA, TN
5880 NOLENSVILLE RD, NASHVILLE, TN
701 BROADWAY, NASHVILLE, TN
801 BROADWAY, NASHVILLE, TN
NASHVILLE HQ: 801 BROADWAY, NASHVILLE, TN
NASHVILLE—ANNEX: 801 BROADWAY, NASHVILLE, TN
810 BROADWAY, NASHVILLE, TN
2607 CHARLOTTE AVE—MODULAR 7, NASHVILLE, TN
NPA (Subcontractor): The Orange Grove Center, Inc., Chattanooga, TN
RC WHITE FEDERAL BLDG: 700 E. SAN ANTONIO AVE, EL PASO, TX
300 N. MAIN ST, EL PASO, TX
NPA (Subcontractor): ReadyOne Industries, Inc., El Paso, TX
2017 SOUTH LIBERTY DR, BLOOMINGTON, IN

12900 NORTH MERIDAN STREET, CARMEL, IN
2525 CALIFORNIA STREET, COLUMBUS, IN
7409 EAGLE CREST BLVD, EVANSVILLE, IN
1111 SOUTH PARK DRIVE, GREENWOOD, IN
225 N HIGH STREET, MUNCIE, IN
801 WABASH AVE, TERRE HAUTE, IN
201 E. RUDISILL BLVD, FORT WAYNE, IN
955 MEZZANINE DRIVE, LAFAYETTE, IN
7525 EAST 39TH STREET, INDIANAPOLIS, IN
NPA (Subcontractor): Shares Inc., Shelbyville, IN
301 SOUTH PROSPECT ROAD, BLOOMINGTON, IL
1201 N MITSUBISHI MOTORWAY, BLOOMINGTON, IL
310–312 W. CHURCH ST., CHAMPAIGN, IL
306 W ELDORADO STREET, DECATUR, IL
405 SOUTH BANKER STREET, EFFINGHAM, IL
2066 WINDISH DR, GALESBURG, IL
2415 WEST CORNERSTONE CT, PEORIA, IL
3701 EAST LAKE CENTRE DR., QUINCY, IL
3101 CONSTITUTION DRIVE, SPRINGFIELD, IL
1122 T & C COMMONS, CHESTERFIELD, MO
111 CORPORATE OFFICE DR. #145, EARTH CITY, MO
1222 SPRUCE ST, ST LOUIS, MO
NPA (Subcontractor): United Cerebral Palsy of the Land of Lincoln, Springfield, IL
1115 NORTH MADISON AVE, EL DORADO, AR
4905 OLD GREENWOOD RD., FORT SMITH, AR
190 AVIATION PLAZA SUITE C, HOT SPRINGS, AR
615 S MAIN ST, JONESBORO, AR
700 W CAPITOL AVENUE, LITTLE ROCK, AR
100 EAST 8TH AVE, PINE BLUFF, AR
1401 HUDSON LN STE 134, MONROE, LA
3007 KNIGHT ST, SHREVEPORT, LA
3333 S. NATIONAL AVE, SPRINGFIELD, MO
109 S HIGHLAND AVE, JACKSON, TN
MEMPHIS FB: 167 N MAIN ST, MEMPHIS, TN
22 N FRONT ST, MEMPHIS, TN
500 N STATE LINE AVE, TEXARKANA, AR
655 E MILSAP RD, FAYETTEVILLE, AR
NPA (Subcontractor): United Cerebral Palsy of Central Arkansas, Little Rock, AR
1110 MONTLIMAR DR, MOBILE, AL
235 ROOSEVELT AVE., ALBANY, GA
3604 MACON ROAD, COLUMBUS, GA
VALDOSTA FB: 401 NORTH PATTERSON ST, VALDOSTA, GA
202 WEST ADAMS STREET, DOTHAN, AL
125 W ROMANA STREET, PENSACOLA, FL
880 N. REUS STREET, PENSACOLA, FL
651–F WEST 14TH STREET, PANAMA CITY, FL
NPA (Subcontractor): Wiregrass Rehabilitation Center, Inc., Dothan, AL
2120 CAPITOL AVE, CHEYENNE, WY
NPA (Subcontractor): Bayaud Industries, Inc., Denver, CO
300 COUNTRY CLUB RD, EUGENE, OR
GUS J. SOLOMON CTHSE: 620 SW MAIN ST, PORTLAND, OR
E.GREEN—W.WYATT FB: 1220 SW THIRD AVE, PORTLAND, OR
1660 OAK STREET SE, SALEM, OR
500 W 12TH ST, VANCOUVER, WA
NPA (Subcontractor): Garten Services, Inc., Salem, OR
10715 DAVID TAYLOR DRIVE, CHARLOTTE, NC
3308 CHAPEL HILLS BLVD, DURHAM, NC
320 FEDERAL PLACE, GREENSBORO, NC
2303 W MEADOWVIEW ROAD, GREENSBORO, NC
115 5TH AVENUE, NW., HICKORY, NC
4405 BLAND ROAD, RALEIGH, NC
RALEIGH FB: 310 NEW BERN AVENUE, RALEIGH, NC
251 N MAIN STREET, WINSTON SALEM, NC
151 PATTON AVENUE, ASHEVILLE, NC
225 GREEN ST, FAYETTEVILLE, NC
3340 JAECKLE DRIVE, WILMINGTON, NC
NPA (Subcontractor): OE Enterprises, Inc., Hillsborough, NC
1212 CHARLES STREET, BEAUFORT, SC
1 POSTON ROAD, CHARLESTON, SC
1835 ASSEMBLY STREET, COLUMBIA, SC
440 ROPER MOUNTAIN ROAD, GREENVILLE, SC
601 19TH AVENUE NORTH, MYRTLE BEACH, SC
401 W EVANS ST, FLORENCE, SC
NPA (Subcontractor): Florence County Disabilities and Special Needs Board, Florence, SC
5799 BROADMOOR ST, MISSION, KS
120 SE 6TH STREET, TOPEKA, KS
271 WEST 3RD STREET NORTH, WICHITA, KS
3720 SOUTH ELIZABETH STREET, INDEPENDENCE, MO
6000 E. GEOSPACE DRIVE, INDEPENDENCE, MO
5800 E BANNISTER ROAD, KANSAS CITY, MO
APPEAL SITE: 2345 GRAND AVE, KANSAS CITY, MO
333 WEST PERSHING ROAD, KANSAS CITY, MO
200 SPACE CENTER DRIVE, LEES SUMMIT, MO
NPA (Subcontractor): Independence and Blue Springs Industries, Inc., Independence, MO
211 N DELAWARE AVE, MASON CITY, IA
NPA (Subcontractor): Harrison County Sheltered Workshop Association, Bethany, MO
4825 COFFEE RD, BAKERSFIELD, CA
NPA (Subcontractor): The Bakersfield Association for Retarded Citizens, Inc., Bakersfield, CA
1534 NORTH BRIDGE ST., CHILLICOTHE, OH
JOHN W PECK FB: 550 MAIN STREET, CINCINNATI, OH
36 E SEVENTH STREET, CINCINNATI, OH
312 ELM ST., CINCINNATI, OH
200 W 2ND ST, DAYTON, OH
70 N. PLAINS ROAD, THE PLAINS, OH
9075 CENTRE POINTE DRIVE, WESTCHESTER, OH
710 MAIN ST., ZANESVILLE, OH
200 WEST FOURTH STREET, COVINGTON, KY
333 SCOTT STREET, COVINGTON, KY
COLUMBUS FOB: 200 N HIGH ST, COLUMBUS, OH
401 NORTH FRONT STREET, COLUMBUS, OH
NPA (Subcontractor): Greene, Inc., Xenia, OH
SANTA ANA POD: 801 CIVIC CENTER DRIVE, W., SANTA ANA, CA
NPA (Subcontractor): Landmark Services, Inc., Santa Ana, CA

Deletions

On 11/23/2009 (74 FR 61114–61115) and 11/27/2009 (74 FR 62287), the Committee for Purchase From People Who Are Blind or Severely Disabled published notices of proposed deletions from the Procurement List.

After consideration of the relevant matter presented, the Committee has determined that the products and services listed below are no longer suitable for procurement by the Federal Government under 41 U.S.C. 46–48c and 41 CFR 51–2.4.

Regulatory Flexibility Act Certification

I certify that the following action will not have a significant impact on a substantial number of small entities. The major factors considered for this certification were:

1. The action will not result in additional reporting, recordkeeping or other compliance requirements for small entities.

2. The action may result in authorizing small entities to furnish the products and services to the Government.

3. There are no known regulatory alternatives which would accomplish the objectives of the Javits-Wagner-O'Day Act (41 U.S.C. 46–48c) in connection with the products and services deleted from the Procurement List.

End of Certification

Accordingly, the following products and services are deleted from the Procurement List:

Products

NSN: 7530–01–450–5414—Appointment Book Refill, 2008
NSN: 7510–01–450–5407—Calendar Pad, Type I, 2008
NSN: 7510–01–450–5425—Calendar Pad, Type II, 2008
NPA: The Easter Seal Society of Western Pennsylvania, Pittsburgh, PA
Contracting Activity: GSA/FSS OFC SUP CTR—PAPER PRODUCTS, NEW YORK, NY

Services

Service Type/Location: Food Service Attendant, Rickenbacker Reserve, Redtail Building Reserve Base, 7370 Minuteman Way, Columbus, OH.
NPA: Goodwill Columbus Outsource Solutions, Columbus, OH
Contracting Activity: DEPT OF THE ARMY, XRAW7NU USPFO

ACTIVITY OH ARNG, COLUMBUS, OH
Service Type/Location: Janitorial/Custodial, TSA Office Space: Norfolk International Airport, 2200 Norview Avenue, Norfolk, VA.
NPA: Portco, Inc., Portsmouth, VA
Contracting Activity: GSA/PBS/R03, RICHMOND, VA
Service Type/Location: Declassification/Demilitarization of Hardware, Robins Air Force Base, GA.
NPA: Epilepsy Association of Georgia, Warner Robins, GA
Contracting Activity: DEPT OF THE AIR FORCE, FA8501 WR ALC PKO, ROBINS AFB, GA
Service Type/Location: Tape Cleaning, Robins Air Force Base, GA.
NPA: Epilepsy Association of Georgia, Warner Robins, GA
Contracting Activity: DEPT OF THE AIR FORCE, FA8501 WR ALC PKO, ROBINS AFB, GA
Service Type/Location: Parts Sorting, Defense Reutilization and Marketing Office, Robins AFB, GA.
NPA: Epilepsy Association of Georgia, Warner Robins, GA
Contracting Activity: DEFENSE LOGISTICS AGENCY, DLA SUPPORT SERVICES—DSS, FORT BELVOIR, VA
Service Type/Location: Janitorial/Custodial, USDA, Building 255E, Sanford Airport, Sanford, FL.
NPA: SMA Behavioral Health Services, Inc., Daytona Beach, FL
Contracting Activity: DEPT OR AGRICULTURE, ANIMAL AND PLANT HEALTH INSPECTION SERVICE, MINNEAPOLIS, MN
Service Type/Location: Food Service Attendant, Fort McPherson, Building 61, Consolidated Enlisted Dining Facility, Fort McPherson, GA.
NPA: Bobby Dodd Institute, Inc., Atlanta, GA
Contracting Activity: DEPT OF THE ARMY, XR W40M NATL REGION CONTRACT OFC, WASHINGTON, DC
Service Type/Location: Janitorial/Mechanical Maintenance, U.S. Federal Building and Post Office, 200 East Washington Street, Greenwood, MS.
NPA: AbilityWorks, Inc. of Greenwood, Greenwood, MS
Contracting Activity: GSA, Public Buildings Service/Property Management Contracts, Atlanta, GA

Barry S. Lineback,
Director, Business Operations.

[FR Doc. 2010–2506 Filed 2–4–10; 8:45 am]
BILLING CODE 6353–01–P

COMMITTEE FOR PURCHASE FROM PEOPLE WHO ARE BLIND OR SEVERELY DISABLED

Procurement List: Proposed Additions and Deletions

AGENCY: Committee for Purchase From People Who Are Blind or Severely Disabled.

ACTION: Proposed additions to and deletions from Procurement List.

SUMMARY: The Committee is proposing to add to the Procurement List a product and a service to be furnished by nonprofit agencies employing persons who are blind or have other severe disabilities, and to delete products previously furnished by such agencies.

Comments Must Be Received on or Before: March 8, 2010.

ADDRESSES: Committee for Purchase From People Who Are Blind or Severely Disabled, Jefferson Plaza 2, Suite 10800, 1421 Jefferson Davis Highway, Arlington, Virginia 22202–3259.

For Further Information or To Submit Comments Contact: Barry S. Lineback, Telephone: (703) 603–7740, Fax: (703) 603–0655, or e-mail *CMTEFedReg@AbilityOne.gov*.

SUPPLEMENTARY INFORMATION: This notice is published pursuant to 41 U.S.C 47(a)(2) and 41 CFR 51–2.3. Its purpose is to provide interested persons an opportunity to submit comments on the proposed actions.

Additions

If the Committee approves the proposed additions, the entities of the Federal Government identified in this notice will be required to provide the product and service listed below from nonprofit agencies employing persons who are blind or have other severe disabilities.

Regulatory Flexibility Act Certification

I certify that the following action will not have a significant impact on a substantial number of small entities. The major factors considered for this certification were:

1. If approved, the action will not result in any additional reporting, recordkeeping or other compliance requirements for small entities other than the small organizations that will provide the product and service to the Government.

2. If approved, the action will result in authorizing small entities provide the product and service to the Government.

3. There are no known regulatory alternatives which would accomplish the objectives of the Javits-Wagner-O'Day Act (41 U.S.C. 46–48c) in connection with the product proposed for addition to the Procurement List.

Comments on this certification are invited. Commenters should identify the statement(s) underlying the certification on which they are providing additional information.

End of Certification

The following product and service are proposed for addition to Procurement List for production by the nonprofit agencies listed:

Product

NSN: 2090–00–372–6064—Repair Kit, Standard.
NPA: Mid-Valley Rehabilitation, Inc., McMinnville, OR.
Contracting Activity: Defense Logistics Agency, Defense Supply Center Columbus, Columbus, OH.
Coverage: C–List for the requirements for the Defense Supply Center Columbus, Columbus, OH.

Service

Service Type/Location: Base Supply Center, Defense Supply Center Columbus, 3990 E Broad Street, Columbus, OH.
NPA: Associated Industries for the Blind, Milwaukee, WI.
Contracting Activity: Defense Logistics Agency, Defense Supply Center Columbus, Columbus, Ohio.

Deletions

Regulatory Flexibility Act Certification

I certify that the following action will not have a significant impact on a substantial number of small entities. The major factors considered for this certification were:

1. If approved, the action will not result in additional reporting, recordkeeping or other compliance requirements for small entities.

2. If approved, the action may result in authorizing small entities to furnish the products to the Government.

3. There are no known regulatory alternatives which would accomplish the objectives of the Javits-Wagner-O'Day Act (41 U.S.C. 46–48c) in connection with the products proposed for deletion from the Procurement List.

End of Certification

The following products are proposed for deletion from the Procurement List:

Products: Inkjet Cartridge.

NSN: 7510–01–544–0833
NSN: 7510–01–544–0836
NSN: 7510–01–544–0832
NSN: 7510–01–544–0835
NSN: 7510–01–544–0837
NSN: 7510–01–544–0823
NSN: 7510–01–544–0829
NSN: 7510–01–544–0827
NSN: 7510–01–544–0819
NSN: 7510–01–544–0830

NSN: 7510–01–544–0820
NSN: 7510–01–544–0826
NSN: 7510–01–544–0825
NSN: 7510–01–544–0831
NSN: 7510–01–544–0839
NSN: 7510–01–539–9836
NSN: 7510–01–539–9837
NSN: 7510–01–539–9842
NSN: 7510–01–539–9838
NSN: 7510–01–539–9834
NSN: 7510–01–544–1733
NSN: 7510–01–544–0838
NPA: Alabama Industries for the Blind, Talladega, AL
Contracting Activity: GSA/FSS OFC SUP CTR—PAPER PRODUCTS, NEW YORK, NY
NSN: 6230–01–513–3265—Flashlight, Aluminum, 2D, Blue
NSN: 6230–01–513–3268—Flashlight, Aluminum, 2D, Red
NSN: 6230–01–513–3279—Flashlight, Aluminum, 4D, Red
NPA: Central Association for the Blind & Visually Impaired, Utica, NY
Contracting Activity: GSA/FSS OFC SUP CTR—PAPER PRODUCTS, NEW YORK, NY

Barry S. Lineback,

Director, Business Operations.

[FR Doc. 2010–2507 Filed 2–4–10; 8:45 am]

BILLING CODE 6353–01–P

DEPARTMENT OF DEFENSE

Office of the Secretary

[Transmittal Nos. 09–03, 09–37, 09–39, 09–57, 09–75 and 10–07]

36(b)(1) Arms Sales Notification

AGENCY: Defense Security Cooperation Agency, DoD.

ACTION: Notice.

SUMMARY: The Department of Defense is publishing the unclassified text of six section 36(b)(1) arms sales notifications to fulfill the requirements of section 155 of Public Law 104–164 dated 21 July 1996.

FOR FURTHER INFORMATION CONTACT: Ms. B. English, DSCA/DBO/CFM, (703) 601–3740.

SUPPLEMENTARY INFORMATION: The following are copies of letters to the Speaker of the House of Representatives, Transmittals 09–03, 09–37, 09–39, 09–57, 09–75 and 10–07 with associated attachments.

Dated: February 1, 2010.

Mitchell S. Bryman,

Alternate OSD Federal Register Liaison Officer, Department of Defense.

Transmittal No. 09–03

The following is a copy of a letter to the Speaker of the House of Representatives, Transmittals 09–03 with attached transmittal, policy justification, and Sensitivity of Technology.

BILLING CODE 5001–06–P

DEFENSE SECURITY COOPERATION AGENCY
201 12TH STREET SOUTH, STE 203
ARLINGTON, VA 22202-5408

JAN 29 2010

The Honorable Nancy Pelosi
Speaker
U. S. House of Representatives
Washington, DC 20515

Dear Madam Speaker:

Pursuant to the reporting requirements of Section 36(b)(1) of the Arms Export Control Act, as amended, we are forwarding herewith Transmittal No. 09-03, concerning the Department of the Army's proposed Letter(s) of Offer and Acceptance to the Taipei Economic and Cultural Representative Office in the United States for defense articles and services estimated to cost $3.1 billion. After this letter is delivered to your office, we plan to issue a press statement to notify the public of this proposed sale.

Sincerely,

Jeffrey A. Wieringa
Vice Admiral, USN
Director

Enclosures:
1. Transmittal
2. Policy Justification
3. Sensitivity of Technology

Transmittal No. 09-03

Notice of Proposed Issuance of Letter of Offer
Pursuant to Section 36(b)(1)
of the Arms Export Control Act, as amended

(i) Prospective Purchaser: Taipei Economic and Cultural Representative Office in the United States

(ii) Total Estimated Value:

Major Defense Equipment*	$1.8 billion
Other	$1.3 billion
TOTAL	$3.1 billion

(iii) Description and Quantity or Quantities of Articles or Services under Consideration for Purchase: 60 UH-60M BLACK HAWK helicopters with 120 T-700-GE-701D engines, 18 spare T-700-GE-701D engines, 69 AN/APR-39A(V)2 Radar Warning Receivers, 69 AN/ALQ-144A(V)1 Infrared Countermeasure Sets, 69 AN/AAR-57 Common Missile Warning Systems, 69 AN/AVR-2B Laser Detecting Sets, 120 GAU-19/A .50 cal Machine Gun Systems, and 310 AN/AVS-9 Aviator Night Vision Goggles. Also included are 50 cal. ammunition, pyrotechnics, cartridges and propellant actuated devices, Po-Sheng Communication/Data Link Systems, ammunition, spare and repair parts, tools and support equipment, publications and technical data, personnel training and training equipment, contractor engineering and technical support services and other related elements of logistics support.

(iv) Military Department: Army (YZC)

(v) Prior Related Cases, if any: none

(vi) Sales Commission, Fee, etc., Paid, Offered, or Agreed to be Paid: none

(vii) Sensitivity of Technology Contained in the Defense Article or Defense Services Proposed to be Sold: See Annex attached

(viii) Date Report Delivered to Congress: JAN 29 2010

* as defined in Section 47(6) of the Arms Export Control Act.

POLICY JUSTIFICATION

Taipei Economic and Cultural Representative Office in the United States – UH-60M BLACK HAWK Helicopters

The Taipei Economic and Cultural Representative Office in the United States has requested a possible sale of 60 UH-60M BLACK HAWK helicopters with 120 T-700-GE-701D engines, 18 spare T-700-GE-701D engines, 69 AN/APR-39A(V)2 Radar Warning Receivers, 69 AN/ALQ-144A(V)1 Infrared Countermeasure Sets, 69 AN/AAR-57 Common Missile Warning Systems, 69 AN/AVR-2B Laser Detecting Sets, 120 GAU-19/A .50 cal Machine Gun Systems, and 310 AN/AVS-9 Aviator Night Vision Goggles. Also included are 50 cal. ammunition, pyrotechnics, cartridges and propellant actuated devices, Also included is other explosives including devices, Po-Sheng Communication/Data Link Systems, ammunition, spare and repair parts, tools and support equipment, publications and technical data, personnel training and training equipment, contractor engineering and technical support services and other related elements of logistics support. The estimated cost is $3.1 billion.

This sale is consistent with United States law and policy as expressed in Public Law 96-8. The U.S. is committed to providing military assistance under the terms of the Taiwan Relations Act.

This proposed sale serves U.S. national, economic, and security interests by supporting the recipient's continuing efforts to modernize its armed forces and enhance its defensive capability. The proposed sale will help improve the security of the recipient and assist in maintaining political stability, military balance, and economic progress in the region.

The recipient needs these helicopters for self-defense, personnel movement, cargo lifting, and aero medical evacuation capabilities. This procurement will modernize the recipient's rotary wing fleet and provide for the defense of vital installations and close air support for ground forces. The recipient will have no difficulty absorbing these helicopters into its armed forces.

The proposed sale of this equipment and support will not alter the basic military balance in the region.

The principal contractors will be: Sikorsky Aircraft (United Technologies) Corporation of Stratford, Connecticut, and General Electric Aircraft Company of Lynn, Massachusetts. The purchaser has requested offsets; however, at this time they are undetermined and will be defined in negotiations between the purchaser and contractors.

Implementation of this proposed sale may require the assignment of two contractor representatives in country for a period of up to two years.

There will be no adverse impact on U.S. defense readiness as a result of this proposed sale.

Transmittal No. 09-03

Notice of Proposed Issuance of Letter of Offer
Pursuant to Section 36(b)(1)
of the Arms Export Control Act

Annex
Item No. vii

(vii) Sensitivity of Technology:

1. The UH-60M BLACK HAWK helicopter contains communications and identification equipment, navigation equipment, aircraft survivability equipment, displays and sensors. The airframe itself does not contain sensitive technology. The highest level of classified information required to be released for training, operation, and maintenance of the BLACK HAWK helicopter is Unclassified. The highest level that could be revealed through reverse engineering or testing of the end item is Secret.

2. The UH-60M BLACK HAWK helicopter will include the following equipment listed below, either installed on the aircraft or included in the sale:

a. AN/ALQ-144A(V)1 Infrared Countermeasure Set is an active, continuously operating, omni-directional, electrically fired infrared (IR) jamming system designed to confuse or decoy threat IR missile systems, in conjunction with low reflective paint and engine suppressors. The hardware is classified Confidential and releasable technical manuals for operation and maintenance are classified Secret.

b. AN/APR-39A(V)2 Radar Signal Detecting Set is a system which provides warning of a radar directed air defense threat to allow appropriate countermeasures. The hardware is classified Confidential when programmed with U.S. threat data; releasable technical manuals for operation and maintenance are classified Confidential; and releasable technical data (technical performance) is classified Secret. The system can be programmed with threat data provided by the recipient.

c. AN/AVR-2B Laser Detecting Set detects, prioritizes in order of lethality and characterizes threats. With clear audible and visual warnings on the display the crew knows it's been targeted, what are coming first and which direction the threat is coming from. The hardware is classified Confidential and releasable technical manuals for operation and maintenance are classified Secret.

d. AN/AAR-57 Common Missile Warning System is a passive laser warning system that receives, processes and displays threat information resulting from aircraft illumination by lasers on the multi-functional display. The hardware is classified Confidential, and releasable technical manuals for operation and maintenance are classified Secret. Reverse engineering is not a major concern.

e. The AN/ALE-47 Countermeasures Dispensing System is an integrated, reprogrammable, computer-controlled system to dispense expendables/decoys to enhance aircraft survivability. The system is designed to employ countermeasures according to a program developed and implemented by the aircrew. This is an upgraded version of the ALE-40, ALE-39 and M-130 systems. The hardware is Unclassified and releasable technical manuals for operation and maintenance are classified Secret.

f. The M130 Flare and Chaff Dispenser dispenses objects to confuse threat radar devices. Radar cross section and frequency coverage are sensitive elements. The hardware and releasable technical manuals for operation and maintenance are Unclassified. Aircraft optimization is the critical element, and reverse engineering is not a major concern.

g. The AN/AVS-9 Night Vision Goggle (NVG) is a 3rd generation aviation NVG offering higher resolution, high gain, and photo response to near infrared. Features include independent eye-span adjustment, 25-mm eye relief eyepieces which easily accommodate eyeglasses, and a low-profile battery pack. Minus-blue filter screens glare from cockpit instrument lighting; class B filter (available with some variants) can accommodate aircraft color displays. Other features include low-distortion optics and automatic brightness control. The Night Vision Imaging System modification includes cockpit modifications to provide NVG-compatible cockpit lighting that optimizes NVG sensitivity, as well as external lighting capable of operating in a covert mode wherein only NVG-equipped personnel can see the aircraft external lighting. Hardware is Unclassified, and technical data and documentation to be provided are Unclassified.

3. If a technologically advanced adversary were to obtain knowledge of the specific hardware or software in this proposed sale, the information could be used to develop countermeasures which might reduce weapon system effectiveness or be used in the development of a system with similar or advanced capabilities.

Transmittal No. 09–37

The following is a copy of a letter to the Speaker of the House of Representatives, Transmittals 09–37 with attached transmittal, policy justification, and Sensitivity of Technology.

DEFENSE SECURITY COOPERATION AGENCY
201 12TH STREET SOUTH, STE 203
ARLINGTON, VA 22202-5408

JAN 29 2010

The Honorable Nancy Pelosi
Speaker
U.S. House of Representatives
Washington, DC 20515-6501

Dear Madam Speaker:

Pursuant to the reporting requirements of Section 36(b)(1) of the Arms Export Control Act, as amended, we are forwarding herewith Transmittal No. 09-37, concerning the Department of the Navy's proposed Letter(s) of Offer and Acceptance to the Taipei Economic and Cultural Representative Office in the United States for defense articles and services estimated to cost $340 million. After this letter is delivered to your office, we plan to issue a press statement to notify the public of this proposed sale.

Sincerely,

Beth M. McCormick
Deputy Director

Enclosures:
1. Transmittal
2. Policy Justification
3. Sensitivity of Technology

Transmittal No. 09-37

Notice of Proposed Issuance of Letter of Offer
Pursuant to Section 36(b)(1)
of the Arms Export Control Act, as amended

(i) Prospective Purchaser: Taipei Economic and Cultural Representative Office in the United States

(ii) Total Estimated Value:

Major Defense Equipment*	$ 23 million
Other	$317 million
TOTAL	$340 million

(iii) Description and Quantity or Quantities of Articles or Services under Consideration for Purchase: 35 Multifunctional Information Distribution Systems Low Volume Terminals (MIDS/LVT-1), 25 MIDS On Ships Terminals, spare and repair parts, support and test equipment, training personnel training and training equipment, repair and return, software and hardware updates, publications and technical documentation, U.S. Government and contractor engineering, technical and logistics support services, and other related elements of logistical and program support.

(iv) Military Department: Navy (GNU)

(v) Prior Related Cases, if any: FMS case GMK-$775M-24Sep03

(vi) Sales Commission, Fee, etc., Paid, Offered, or Agreed to be Paid: none

(vii) Sensitivity of Technology Contained in the Defense Article or Defense Services Proposed to be Sold: See Annex attached.

(viii) Date Report Delivered to Congress: JAN 29 2010

* as defined in Section 47(6) of the Arms Export Control Act.

POLICY JUSTIFICATION

Taipei Economic and Cultural Representative Office in the United States – Multifunctional Information Distribution Systems

The Taipei Economic and Cultural Representative Office in the United States has requested a possible sale of 35 Multifunctional Information Distribution Systems Low Volume Terminals (MIDS/LVT-1), 25 MIDS On Ships Terminals, spare and repair parts, support and test equipment, training personnel training and training equipment, repair and return, software and hardware updates, publications and technical documentation, U.S. Government and contractor engineering services, technical and logistics support services, and other related elements of logistical and program support. The estimated cost is $340 million.

This proposed sale serves U.S. national, economic, and security interests by supporting the recipient's continuing efforts to modernize its armed forces and enhance its defensive capability. The proposed sale will help improve the security of the recipient and assist in maintaining political stability, military balance, and economic progress in the region.

This proposed sale will use these systems to improve and integrate the recipient's information flow, and display of tactical aircraft, surface ships, and ground stations. The recipient will use the enhanced capability as a deterrent to regional threats and to strengthen its homeland defense. The recipient will have no difficulty absorbing these additional terminals into its inventory.

This sale is consistent with United States law and policy as expressed in Public Law 96-8. The U.S. is committed to providing military assistance under the terms of the Taiwan Relations Act.

The proposed sale of this equipment and support will not alter the basic military balance in the region.

The prime contractor will be selected through a competitive procurement conducted by the US Government in accordance with the Federal Acquisition Regulation. There are no known offset agreements proposed in connection with this potential sale.

Implementation of this proposed sale will require multiple trips to recipient country involving U.S. Government and contractor representatives to participate in training, program management, and technical reviews.

There will be no adverse impact on U.S. defense readiness as a result of this proposed sale.

Transmittal No. 09-37

Notice of Proposed Issuance of Letter of Offer
Pursuant to Section 36(b)(1)
of the Arms Export Control Act

Annex
Item No. vii

(vii) Sensitivity of Technology:

1. The Multifunctional Information Distribution Low Volume Terminals (MIDS/LVT-1) and MIDS On Ship Terminal hardware, publications, performance specifications, operational capability, parameters, vulnerabilities to countermeasures, and software documentation are classified Confidential. The classified information to be provided consists of that which is necessary for the operation, maintenance, and repair of the data link terminal, installed systems, and related software.

2. If a technologically advanced adversary were to obtain knowledge of the specific hardware and software elements, the information could be used to develop countermeasures which might reduce weapon system effectiveness or be used in the development of a system with similar or advanced capabilities.

Transmittal No. 09–39

The following is a copy of a letter to the Speaker of the House of Representatives, Transmittals 09–39 with attached transmittal, and policy justification.

DEFENSE SECURITY COOPERATION AGENCY
201 12TH STREET SOUTH, STE 203
ARLINGTON, VA 22202-5408

JAN 29 2010

The Honorable Nancy Pelosi
Speaker
U.S. House of Representatives
Washington, DC 20515

Dear Madam Speaker:

Pursuant to the reporting requirements of Section 36(b)(1) of the Arms Export Control Act, as amended, we are forwarding herewith Transmittal No. 09-39, concerning the Department of the Navy's proposed Letter(s) of Offer and Acceptance to Taipei Economic and Cultural Representative Office in the United States for defense articles and services estimated to cost $105 million. After this letter is delivered to your office, we plan to issue a press statement to notify the public of this proposed sale.

Sincerely,

Jeffrey A. Wieringa
Vice Admiral, USN
Director

Enclosures:
1. Transmittal
2. Policy Justification

Transmittal No. 09-39

Notice of Proposed Issuance of Letter of Offer
Pursuant to Section 36(b)(1)
of the Arms Export Control Act

(i) Prospective Purchaser: Taipei Economic and Cultural Representative Office in the United States pursuant to P.L. 96-8

(ii) Total Estimated Value:

Major Defense Equipment*	$ 12 million
Other	$ 93 million
TOTAL	$ 105 million

(iii) Description and Quantity or Quantities of Articles or Services under Consideration for Purchase: Two (2) OSPREY Class Mine Hunting Ships, including refurbishment and upgrade, overhaul of AN/SQQ-32 Sonar, transportation, support and test equipment, spare and repair parts, publications and technical documentation, personnel training and training equipment, U.S. Government and contractor technical, engineering, and logistics support services, and other related elements of logistics support.

(iv) Military Department: Navy (SEJ)

(v) Prior Related Cases, if any: none

(vi) Sales Commission, Fee, etc., Paid, Offered, or Agreed to be Paid: none

(vii) Sensitivity of Technology Contained in the Defense Article or Defense Services Proposed to be Sold: none

(viii) Date Report Delivered to Congress: JAN 29 2010

* as defined in Section 47(6) of the Arms Export Control Act.

POLICY JUSTIFICATION

Taipei Economic and Cultural Representative Office in the United States – Sale, Refurbishment and Upgrade of 2 OSPREY Class Mine Hunting Ships

The Taipei Economic and Cultural Representative Office in the United States has requested a possible sale of two (2) OSPREY Class Mine Hunting Ships, including refurbishment and upgrade, overhaul of AN/SQQ-32 Sonar, transportation, support and test equipment, spare and repair parts, publications and technical documentation, personnel training and training equipment, U.S. Government and contractor technical, engineering, and logistics support services, and other related elements of logistics support. The estimated cost is $105 million.

This sale is consistent with United States law and policy as expressed in Public Law 96-8.

This proposed sale serves U.S. national, economic, and security interests by supporting the recipient's continuing efforts to modernize its armed forces and enhance its defensive capability. The proposed sale will help improve the security of the recipient and assist in maintaining political stability, military balance, and economic progress in the region.

The proposed sale will improve recipient's capability to meet current and future threats of enemy mining operations. The recipient will use the enhanced capability as a deterrent to regional threats and to strengthen its homeland defense. The recipient, which already has mine hunters in its inventory, will have no difficulty absorbing these additional ships.

A U.S. prime contractor will be chosen after a competitive source selection. There are no known offset agreements proposed in connection with this potential sale.

Implementation of this sale will not require the assignment of any additional U.S. Government personnel or contractor representatives to recipient country.

There will be no adverse impact on U.S. defense readiness as a result of this proposed sale.

Transmittal No. 09–57

The following is a copy of a letter to the Speaker of the House of Representatives, Transmittals 09–57 with attached transmittal, policy justification, and Sensitivity of Technology.

DEFENSE SECURITY COOPERATION AGENCY
201 12TH STREET SOUTH, STE 203
ARLINGTON, VA 22202-5408

JAN 29 2010

The Honorable Nancy Pelosi
Speaker
U.S. House of Representatives
Washington, DC 20515

Dear Madam Speaker:

Pursuant to the reporting requirements of Section 36(b)(1) of the Arms Export Control Act, as amended, we are forwarding herewith Transmittal No. 09-57, concerning the Department of the Navy's proposed Letter(s) of Offer and Acceptance to the Taipei Economic and Cultural Representative Office in the United States for defense articles and services estimated to cost $37 million. After this letter is delivered to your office, we plan to issue a press statement to notify the public of this proposed sale.

Sincerely,

Jeffrey A. Wieringa
Vice Admiral, USN
Director

Enclosures:
1. Transmittal
2. Policy Justification
3. Sensitivity of Technology

Transmittal No. 09-57

Notice of Proposed Issuance of Letter of Offer
Pursuant to Section 36(b)(1)
of the Arms Export Control Act

(i) Prospective Purchaser: Taipei Economic and Cultural Representative Office in the United States

(ii) Total Estimated Value:

Major Defense Equipment*	$ 33 million
Other	$ 4 million
TOTAL	$ 37 million

(iii) Description and Quantity or Quantities of Articles or Services under Consideration for Purchase: 10 RTM-84L HARPOON Block II Telemetry missiles; 2 ATM-84L HARPOON Block II Telemetry missiles; containers; training devices; spare and repair parts; supply/technical support; support equipment; personnel training and training equipment; technical data and publications; U.S. Government and contractor engineering and logistics support services; and other related elements of logistics support.

(iv) Military Department: Navy (LHH)

(v) Prior Related Cases, if any:
FMS case LEZ-$68M-28Aug93
FMS case LFV-$95M-16Mar97

(vi) Sales Commission, Fee, etc., Paid, Offered, or Agreed to be Paid: none

(vii) Sensitivity of Technology Contained in the Defense Article or Defense Services Proposed to be Sold: See Annex Attached

(viii) Date Report Delivered to Congress: JAN 29 2010

* as defined in Section 47(6) of the Arms Export Control Act.

POLICY JUSTIFICATION

Taipei Economic and Cultural Representative Office in the United States – RTM-84L HARPOON Block II Telemetry Missiles

The Taipei Economic and Cultural Representative Office in the United States has requested a possible sale of 10 RTM-84L HARPOON Block II Telemetry missiles; 2 ATM-84L HARPOON Block II Telemetry missiles; containers; training devices; spare and repair parts; supply/technical support; support equipment; personnel training and training equipment; technical data and publications; U.S. Government and contractor engineering and logistics support services; and other related elements of logistics support. The estimated cost is $37 million.

This proposed sale serves U.S. national, economic, and security interests by supporting the recipient's continuing efforts to modernize its armed forces and enhance its defensive capability. The proposed sale will help improve the security of the recipient and assist in maintaining political stability, military balance, and economic progress in the region.

The proposed sale will improve the recipient's capability to meet current and future threats of hostile surface ship operations. The recipient, which already has HARPOON missiles in its inventory, will have no difficulty absorbing these additional missiles.

This sale is consistent with United States law and policy as expressed in Public Law 96-8. The U.S. is committed to providing military assistance under the terms of the Taiwan Relations Act.

The prime contractor will be The McDonnell Douglas Company, a wholly owned subsidiary of the Boeing Company in St. Louis, Missouri. There are no known offset agreements proposed in connection with this potential sale.

Implementation of this sale will not require the assignment of any additional U.S. Government personnel or contractor representatives to the recipient.

There will be no adverse impact on U.S. defense readiness as a result of this proposed sale.

Transmittal No. 09-57

Notice of Proposed Issuance of Letter of Offer
Pursuant to Section 36(b)(1)
of the Arms Export Control Act

Annex
Item No. vii

(vii) Sensitivity of Technology:

1. The RTM-84L and ATM-84L HARPOON Block II Telemetry missiles are a multi-environmental launch Anti-Surface Warfare training missiles that provide naval forces with proof of their capability to engage targets in both the "blue water" regions and the littorals of the world. The RTM-84L and ATM-84L HARPOON Block II missiles, including publications, documentation, operations, supply, maintenance, and training, are classified Confidential.

2. The RTM-84L and ATM-84L incorporates components, software, and technical design information that are considered sensitive. The following HARPOON components being conveyed by the proposed sale that are classified Confidential include:

a. Radar seeker
b. Global Positioning System/Inertial Navigation System (GPS/INS)
c. Operational Flight Program (OFP) software
d. Missile operational characteristics and performance data
e. Coastal Target Suppression (CTS)
f. Guidance Control Unit

These elements are essential to the ability of the HARPOON missile to selectively engage hostile targets under a wide range of operational, tactical, and environmental conditions. The recipient's military forces have been previously approved for the GPS Precision Positioning Service (GPS/PPS).

3. If a technologically advanced adversary were to obtain knowledge of the specific hardware and software elements, the information could be used to develop countermeasures which might reduce weapon system effectiveness or be used in the development of a system with similar or advanced capabilities.

Transmittal No. 09–75

The following is a copy of a letter to the Speaker of the House of Representatives, Transmittals 09–75 with attached transmittal, policy justification, and Sensitivity of Technology.

DEFENSE SECURITY COOPERATION AGENCY
201 12TH STREET SOUTH, STE 203
ARLINGTON, VA 22202-5408

JAN 29 2010

The Honorable Nancy Pelosi
Speaker
U.S. House of Representatives
Washington, DC 20515

Dear Madam Speaker:

Pursuant to the reporting requirements of Section 36(b)(1) of the Arms Export Control Act, as amended, we are forwarding herewith Transmittal No. 09-75, concerning the Department of the Army's proposed Letter(s) of Offer and Acceptance to Taipei Economic and Cultural Representative Office in the United States for defense articles and services estimated to cost $2,810 billion. After this letter is delivered to your office, we plan to issue a press statement to notify the public of this proposed sale.

Sincerely,

Jeffrey A. Wieringa
Vice Admiral, USN
Director

Enclosures:
1. Transmittal
2. Policy Justification
3. Sensitivity of Technology

Transmittal No. 09-75

Notice of Proposed Issuance of Letter of Offer
Pursuant to Section 36(b)(1)
of the Arms Export Control Act

(i) Prospective Purchaser: Taipei Economic and Cultural Representative Office in the United States pursuant to P.L. 96-8

(ii) Total Estimated Value:

Major Defense Equipment*	$1.57 billion
Other	$1.24 billion
TOTAL	$2.81 billion

(iii) Description and Quantity or Quantities of Articles or Services under Consideration for Purchase: 114 PATRIOT Advanced Capability (PAC-3) missiles, 3 AN/MPQ-65 Radar Sets, 1 AN/MSQ-133 Information and Coordination Centrals, 1 Tactical Command Station, 3 Communication Relay Groups, 3 AN/MSQ-132 Engagement Control Stations, 26 M902 Launching Stations, 5 Antenna Mast Groups, 1 Electronic Power Plant III (EPP), battery and battalion maintenance equipment, prime movers, generators, electrical power units, personnel training and equipment, trailers, communication equipment, tool and test sets, spare and repair parts, publications and technical documentation, Quality Assurance Team support services, U.S. Government and contractor engineering and logistics support services, and other related elements of logistics support.

(iv) Military Department: Army (YYV, Amd #4)

(v) Prior Related Cases, if any: FMS Case YYV-$3.8B-17Jul09

(vi) Sales Commission, Fee, etc., Paid, Offered, or Agreed to be Paid: None

(vii) Sensitivity of Technology Contained in the Defense Article or Defense Services Proposed to be Sold: See Annex Attached.

(viii) Date Report Delivered to Congress: JAN 29 2010

* as defined in Section 47(6) of the Arms Export Control Act.

POLICY JUSTIFICATION

Taipei Economic and Cultural Representative Office in the United States - PATRIOT Configuration 3 Ground Systems and PATRIOT Advanced Capability-3 Guided Missiles

The Taipei Economic and Cultural Representative Office in the United States has requested a possible sale of 114 PATRIOT Advanced Capability (PAC-3) missiles, 3 AN/MPQ-65 Radar Sets, 1 AN/MSQ-133 Information and Coordination Centrals, 1 Tactical Command Station, 3 Communication Relay Groups, 3 AN/MSQ-132 Engagement Control Stations, 26 M902 Launching Stations, 5 Antenna Mast Groups, 1 Electronic Power Plant III (EPP), battery and battalion maintenance equipment, prime movers, generators, electrical power units, personnel training and equipment, trailers, communication equipment, tool and test sets, spare and repair parts, publications and technical documentation, Quality Assurance Team support services, U.S. Government and contractor engineering and logistics support services, and other related elements of logistics support. The estimated cost is $2.81 billion.

This sale is consistent with United States law and policy as expressed in Public Law 96-8. The U.S. is committed to providing military assistance under the terms of the Taiwan Relations Act.

This proposed sale serves U.S. national, economic, and security interests by supporting the recipient's continuing efforts to modernize its armed forces and enhance its defensive capability. The proposed sale will help improve the security of the recipient and assist in maintaining political stability, military balance, and economic progress in the region.

The proposed sale will improve the recipient's capability to meet current and future threats of enemy air strikes. The recipient will use the enhanced capability as a deterrent to regional threats and to strengthen its homeland defense. The recipient, which already has PAC-3 missiles in its inventory, will have no difficulty absorbing these missiles.

The proposed sale of this equipment and support will not alter the basic military balance in the region.

The principal contractors will be: Raytheon Corporation in Andover, MA, and Lockheed-Martin in Dallas, TX. There are no known offset agreements proposed in connection with this potential sale.

Implementation of this proposed sale will not require the assignment of any additional U.S. Government and contractor representatives in country.

There will be no adverse impact on U.S. defense readiness as a result of this proposed sale.

Transmittal No. 09-75

Notice of Proposed Issuance of Letter of Offer
Pursuant to Section 36(b)(1)
of the Arms Export Control Act, as amended

Annex
Item No. vii

(vii) Sensitivity of Technology:

1. The PATRIOT Air Defense System contains classified Secret components and critical/sensitive technology. The PATRIOT Advanced Capability-3 (PAC-3) Missile Four-Pack is classified Confidential.

2. The PAC-3 Missile sensitive/critical technology is in the area of design and production know-how and primarily inherent in the design, development and/or manufacturing data related to certain components. Information on system performance capabilities and effectiveness, select software documentation, and test data are classified up to Secret.

3. AIT and TECRO signed a PATRIOT PAC-3/Configuration 3 Security Agreement on 14 December 2007. The U.S. requires such an agreement as an additional measure to safeguard classified and sensitive information, equipment and technology prior to entering into the sale of Configuration 3 to any international customer.

4. If a technologically advanced adversary were to obtain knowledge of the specific hardware and software elements, the information could be used to develop countermeasures that might reduce weapon system effectiveness or be used in the development of a system with similar or advanced capabilities.

Transmittal No. 10–07

The following is a copy of a letter to the Speaker of the House of Representatives, Transmittals 10–07 with attached transmittal, and policy justification.

DEFENSE SECURITY COOPERATION AGENCY
201 12TH STREET SOUTH, STE 203
ARLINGTON, VA 22202-5408

JAN 29 2010

The Honorable Nancy Pelosi
Speaker
U.S. House of Representatives
Washington, DC 20515

Dear Madam Speaker:

Pursuant to the reporting requirements of Section 36(b)(1) of the Arms Export Control Act, as amended, we are forwarding herewith Transmittal No. 10-07, concerning the Department of the Air Force's proposed Letter(s) of Offer and Acceptance to Pakistan for defense articles and services estimated to cost $100 million. After this letter is delivered to your office, we plan to issue a press statement to notify the public of this proposed sale.

Sincerely,

Jeffrey A. Wieringa
Vice Admiral, USN
Director

Enclosures:
1. Transmittal
2. Policy Justification

Transmittal No. 10-07

Notice of Proposed Issuance of Letter of Offer
Pursuant to Section 36(b)(1)
of the Arms Export Control Act, as amended

(i) Prospective Purchaser: Pakistan

(ii) Total Estimated Value:

Major Defense Equipment*	$ 0 million
Other	$100 million
TOTAL	$100 million

(iii) Description and Quantity or Quantities of Articles or Services under Consideration for Purchase: to provide technical support services at Shahbaz Air Base to assist in the oversight of operations in support of the Pakistan Peace Drive F-16 program. Also included: U.S. Government and contractor technical and logistics support services, and other related elements of logistics support.

(iv) Military Department: Air Force (GAC)

(v) Prior Related Cases, if any: None

(vi) Sales Commission, Fee, etc., Paid, Offered, or Agreed to be Paid: None

(vii) Sensitivity of Technology Contained in the Defense Article or Defense Services Proposed to be Sold: None

(viii) Date Report Delivered to Congress: JAN 29 2010

* as defined in Section 47(6) of the Arms Export Control Act.

POLICY JUSTIFICATION

Pakistan – Technical Support Team

The Government of Pakistan has requested a possible sale to provide technical support services at Shahbaz Air Base to assist in the oversight of operations in support of the Pakistan Peace Drive F-16 program. Also included: U.S. Government and contractor technical and logistics support services, and other related elements of logistics support. The estimated cost is $100 million.

This proposed sale will contribute to the foreign policy and national security of the United States by helping to improve the security of a friendly country that has been and continues to be an important force for economic progress in South Asia and a partner in overseas contingency operations.

Pakistan is vital to U.S. foreign policy and national security goals in South Asia.

The proposed sale of this support will not alter the basic military balance in the region.

The principal contractor will be will be determined at a later date. There are no known offset agreements proposed in connection with this potential sale.

There will be no adverse impact on U.S. defense readiness as a result of this proposed sale.

[FR Doc. 2010–2443 Filed 2–4–10; 8:45 AM]
BILLING CODE 5001–06–C

DEPARTMENT OF DEFENSE

Office of the Secretary

[Docket No. DoD–2009–OS–0173]

Submission for OMB Review; Comment Request

ACTION: Notice.

The Department of Defense has submitted to OMB for clearance, the following proposal for collection of information under the provisions of the Paperwork Reduction Act (44 U.S.C. Chapter 35).

DATES: Consideration will be given to all comments received by March 8, 2010.

Title and OMB Number: Voice of Industry Survey; OMB Control Number 0704–TBD.

Type of Request: New.

Number of Respondents: 12,938.

Responses per Respondent: 1.

Annual Responses: 12,938.

Average Burden per Response: .5 hour.

Annual Burden Hours: 6,469 hours.

Needs and Uses: Executive Order 12829, "National Industrial Security Program (NISP)" Section 202(a) stipulates that the Secretary of Defense shall serve as the Executive Agent for inspecting and monitoring the contractors, licensees, and grantees who require or will require access to or who store or will store classified information; and for determining the eligibility for access to classified information of contractors, licensees, and grantees and their respective employees. The Executive Agent has the authority to issue, after consultation with affected agencies, standard forms or other standardization that will promote the implementation of the NISP. The Cognizant Security Agency (CSA), designated by the NISPOM, is responsible for determining the frequency of Security Reviews which may be increased or decreased for sufficient reason, consistent with risk management principles. Department of Defense Directive 5105.42, "Defense Security Service," dated May 13, 1999, delineates the mission, functions and responsibilities of DSS. DSS functions and responsibilities include the administration and implementation of the Defense portion of the NISP. This survey will provide feedback on how well DSS is doing with respect to the administration and implementation of the NISP. Participation in the survey is strictly voluntary.

Affected Public: Business or other-for-profit; not-for-profit institutions.

Frequency: Annually.

Respondent's Obligation: Voluntary.

OMB Desk Officer: Ms. Jasmeet Seehra.

Written comments and recommendations on the proposed information collection should be sent to Ms. Seehra at the Office of Management and Budget, Desk Officer for DoD, Room 10236, New Executive Office Building, Washington, DC 20503.

You may also submit comments, identified by docket number and title, by the following method:

• *Federal eRulemaking Portal: http://www.regulations.gov.* Follow the instructions for submitting comments.

Instructions: All submissions received must include the agency name, docket number and title for this **Federal Register** document. The general policy for comments and other submissions from members of the public is to make these submissions available for public viewing on the Internet at *http://www.regulations.gov* as they are received without change, including any personal identifiers or contact information.

DOD Clearance Officer: Ms. Patricia Toppings.

Written requests for copies of the information collection proposal should be sent to Ms. Toppings at WHS/ESD/Information Management Division, 1777 North Kent Street, RPN, Suite 11000, Arlington, VA 22209–2133.

Dated: January 26, 2010.

Patricia L. Toppings,

OSD Federal Register Liaison Officer, Department of Defense.

[FR Doc. 2010–2457 Filed 2–4–10; 8:45 am]

BILLING CODE 5001–06–P

DEPARTMENT OF DEFENSE

Office of the Secretary

[Docket No. DoD–2009–OS–0156]

Submission for OMB Review; Comment request

ACTION: Notice.

The Department of Defense has submitted to OMB for clearance the following proposal for collection of information under the provisions of the Paperwork Reduction Act (44 U.S.C. Chapter 35).

DATES: Consideration will be given to all comments received by March 8, 2010.

Title and OMB Number: Post-Government Employment Advice Opinion Request; OMB Control Number 0704–TBD.

Type of Request: New.

Number of Respondents: 200.

Responses per Respondent: 1.

Annual Responses: 200.

Average Burden per Response: 1.5 hours.

Annual Burden Hours: 300 hours.

Needs and Uses: The information collection requirement is necessary to obtain minimal information on which to base an opinion about post-Government employment of select former and departing Department of Defense (DoD) employees seeking to work for Defense Contractors within two years after leaving DoD. The departing or former DoD employee uses the form to organize and provide employment-related information to an ethics official who will use the information to render an advisory opinion to the employee requesting the opinion. The National Defense Authorization Act of 2008, Public Law 110–181, section 847, *http://www.dod.mil/dodgc/olc/docs/pl110-181.pdf*, requires that select DoD officials and former DoD officials who, within two years after leaving DoD, expect to receive compensation from a DoD contractor, shall, before accepting such compensation, request a written opinion regarding the applicability of post-employment restrictions to activities that the official or former official may undertake on behalf of a contractor.

Affected Public: Individuals or households; business or other-for-profit; Federal Government.

Frequency: On occasion.

Respondent's Obligation: Voluntary.

OMB Desk Officer: Ms. Jasmeet Seehra.

Written comments and recommendations on the proposed information collection should be sent to Ms. Seehra at the Office of Management and Budget, Desk Officer for DoD, Room 10236, New Executive Office Building, Washington, DC 20503.

You may also submit comments, identified by docket number and title, by the following method:

• *Federal eRulemaking Portal: http://www.regulations.gov.* Follow the instructions for submitting comments.

Instructions: All submissions received must include the agency name, docket number and title for this **Federal Register** document. The general policy for comments and other submissions from members of the public is to make these submissions available for public viewing on the Internet at *http://www.regulations.gov* as they are received without change, including any personal identifiers or contact information.

DOD Clearance Officer: Ms. Patricia Toppings.

Written requests for copies of the information collection proposal should be sent to Ms. Toppings at WHS/ESD/Information Management Division, 1777 North Kent Street, RPN, Suite 11000, Arlington, VA 22209–2133.

Dated: January 26, 2010.

Patricia L. Toppings,

OSD Federal Register Liaison Officer, Department of Defense.

[FR Doc. 2010–2456 Filed 2–4–10; 8:45 am]

BILLING CODE 5001–06–P

DEPARTMENT OF DEFENSE

Office of the Secretary

[Docket No. DOD–2009–HA–0161]

Submission for OMB Review; Comment Request

ACTION: Notice.

The Department of Defense has submitted to OMB for clearance, the following proposal for collection of information under the provisions of the Paperwork Reduction Act (44 U.S.C. Chapter 35).

DATES: Consideration will be given to all comments received by March 8, 2010.

Title and OMB Number: Application for TRICARE–Provider Status: Corporation Services Provider; OMB Number 0720–0020.

Type of Request: Extension.

Number of Respondents: 200.

Responses Per Respondent: 1.

Annual Responses: 200.

Average Burden Per Response: 1 hour.

Annual Burden Hours: 200 hours.

Needs and Uses: The information collection will allow eligible providers to apply for Corporate Services Provider status under the TRICARE program.

Affected Public: Businesses or other for-profit; not-for-profit institutions.

Frequency: On occasion.

Respondent's Obligation: Required to obtain or retain benefits.

OMB Desk Officer: Mr. John Kraemer.

Written comments and recommendations on the proposed information collection should be sent to Mr. Kraemer at the Office of Management and Budget, Desk Officer for DoD, Room 10236, New Executive Office Building, Washington, DC 20503.

You may also submit comments, identified by docket number and title, by the following method:

• *Federal eRulemaking Portal: http://www.regulations.gov.* Follow the instructions for submitting comments.

Instructions: All submissions received must include the agency name, docket number and title for this **Federal Register** document. The general policy for comments and other submissions from members of the public is to make these submissions available for public viewing on the Internet at *http://www.regulations.gov* as they are received without change, including any personal identifiers or contact information.

DOD Clearance Officer: Ms. Patricia Toppings.

Written requests for copies of the information collection proposal should be sent to Ms. Toppings at WHS/ESD/Information Management Division, 1777 North Kent Street, RPN, Suite 11000, Arlington, VA 22209–2133.

Dated: January 26, 2010.

Patricia L. Toppings,

OSD Federal Register Liaison Officer, Department of Defense.

[FR Doc. 2010–2455 Filed 2–4–10; 8:45 am]

BILLING CODE 5001–06–P

DEPARTMENT OF DEFENSE

Office of the Secretary

[Docket No. DoD–2009–OS–0158]

Submission for OMB Review; Comment Request

ACTION: Notice.

The Department of Defense has submitted to OMB for clearance, the following proposal for collection of information under the provisions of the Paperwork Reduction Act (44 U.S.C. Chapter 35).

DATES: Consideration will be given to all comments received by March 8, 2010.

Title and OMB Number: Physician Certificate for Child Annuitant, DD Form 2828, OMB License 0730–0011.

Type of Request: Extension.

Number of Respondents: 120.

Responses per Respondent: 1.

Annual Responses: 120.

Average Burden per Response: 2 hours.

Annual Burden Hours: 240 hours.

Needs and Uses: This form is required and must be on file to support an incapacitation occurring prior to age 18. The form provides the authority for the Directorate of Annuity Pay, Defense Finance and Accounting Service—Cleveland (DFAS–CL/JFRA) to establish and pay a Retired Serviceman's Family Protection Plan (RSFPP) or Survivor Benefit Plan (SBP) annuity to the incapacitated individual.

Affected Public: Individuals or households.

Frequency: On occasion.

Respondent's Obligation: Required to obtain or retain benefits.

OMB Desk Officer: Ms. Jasmeet Seehra.

Written comments and recommendations on the proposed information collection should be sent to Ms. Seehra at the Office of Management and Budget, Desk Officer for DoD, Room 10236, New Executive Office Building, Washington, DC 20503.

You may also submit comments, identified by docket number and title, by the following method:

• *Federal eRulemaking Portal: http://www.regulations.gov.* Follow the instructions for submitting comments.

Instructions: All submissions received must include the agency name, docket number and title for this **Federal Register** document. The general policy for comments and other submissions from members of the public is to make these submissions available for public viewing on the Internet at *http://www.regulations.gov* as they are received without change, including any personal identifiers or contact information.

DOD Clearance Officer: Ms. Patricia Toppings.

Written requests for copies of the information collection proposal should be sent to Ms. Toppings at WHS/ESD/Information Management Division, 1777 North Kent Street, RPN, Suite 11000, Arlington, VA 22209–2133.

Dated: January 26, 2010.

Patricia L. Toppings,

OSD Federal Register Liaison Officer, Department of Defense.

[FR Doc. 2010–2454 Filed 2–4–10; 8:45 am]

BILLING CODE 5001–06–P

DEPARTMENT OF DEFENSE

Office of the Secretary

[Docket No. DoD–2009–OS–0087]

Submission for OMB Review; Comment Request

ACTION: Notice.

The Department of Defense has submitted to OMB for clearance, the following proposal for collection of information under the provisions of the Paperwork Reduction Act (44 U.S.C. Chapter 35).

DATES: Consideration will be given to all comments received by March 8, 2010.

Title and OMB Number: Qualification to Possess Firearms or Ammunition; OMB Control Number 0704–0461.

Type of Request: Extension.

Number of Respondents: 125 companies.

Responses per Respondent: 5 to 2,500 employees (average 120).

Annual Responses: 15,000.

Average Burden per Response: 15 minutes.

Annual Burden Hours: 3,750 hours (15,000 employees × .25 hrs).

Needs and Uses: In accordance with DoD Instruction 3020.50, "Private Security Contractors Operating in Contingency Operations" written acknowledgement by the contract company and its individual Private Security Contractor (PSC) personnel, after investigation of background of PSC personnel by the contractor, shall be provided verifying such personnel are not prohibited under 922(g) of title 18, United States Code to possess firearms or ammunition.

Affected Public: Business or other for-profit.

Frequency: On occasion.

Respondent's Obligation: Required to obtain or retain benefits.

OMB Desk Officer: Ms. Jasmeet Seehra.

Written comments and recommendations on the proposed information collection should be sent to Ms. Seehra at the Office of Management and Budget, Desk Officer for DoD, Room 10236, New Executive Office Building, Washington, DC 20503.

You may also submit comments, identified by docket number and title, by the following method:

• *Federal eRulemaking Portal: http://www.regulations.gov.* Follow the instructions for submitting comments.

Instructions: All submissions received must include the agency name, docket number and title for this **Federal Register** document. The general policy for comments and other submissions from members of the public is to make these submissions available for public viewing on the Internet at *http://www.regulations.gov* as they are received without change, including any personal identifiers or contact information.

DoD Clearance Officer: Ms. Patricia Toppings.

Written requests for copies of the information collection proposal should be sent to Ms. Toppings at WHS/ESD/Information Management Division, 1777 North Kent Street, RPN, Suite 11000, Arlington, VA 22209–2133.

Dated: January 26, 2010.

Patricia L. Toppings,

OSD Federal Register Liaison Officer, Department of Defense.

[FR Doc. 2010–2453 Filed 2–4–10; 8:45 am]

BILLING CODE 5001–06–P

DEPARTMENT OF DEFENSE

Office of the Secretary

[Docket No. DoD–2009–OS–0088]

Submission for OMB Review; Comment Request

ACTION: Notice.

The Department of Defense has submitted to OMB for clearance, the following proposal for collection of information under the provisions of the Paperwork Reduction Act (44 U.S.C. Chapter 35).

DATES: Consideration will be given to all comments received by March 8, 2010.

Title and OMB Number: Synchronized Predeployment and Operational Tracker (SPOT) System; OMB Control Number 0704–0460.

Type of Request: Extension.

Number of Respondents: 1,300 companies.

Responses per Respondent: 1 to 32,000 employees (average 231).

Annual Responses: 300,000.

Average Burden per Response: 30 minutes.

Annual Burden Hours: 150,000 hours (300,000 individual records × .5 hrs).

Needs and Uses: In accordance with section 861 of Public Law 110–181 and DoD Instruction 3020.41, "Contractor Personnel Authorized to Accompany the U.S. Armed Forces" and other appropriate policy, Memoranda of Understanding, and regulations, the DoD Components, the Department of State (DoS), and the United States Agency for International Development (USAID) shall ensure that contractors enter data into the Synchronized Predeployment and Operational Tracker (SPOT) System before deployment outside the United States.

Data collection on contractors is a condition of their contract when DFARS 252.225–7040 is incorporated and persons who choose not to have data collected will not be entitled to employment opportunities which require this data to be collected.

Affected Public: Business or other for-profit.

Frequency: On occasion.

Respondent's Obligation: Required to obtain or retain benefits.

OMB Desk Officer: Ms. Jasmeet Seehra.

Written comments and recommendations on the proposed information collection should be sent to Ms. Seehra at the Office of Management and Budget, Desk Officer for DoD, Room 10236, New Executive Office Building, Washington, DC 20503.

You may also submit comments, identified by docket number and title, by the following method:

• *Federal eRulemaking Portal: http://www.regulations.gov.* Follow the instructions for submitting comments.

Instructions: All submissions received must include the agency name, docket number and title for this **Federal Register** document. The general policy for comments and other submissions from members of the public is to make these submissions available for public viewing on the Internet at *http://www.regulations.gov* as they are received without change, including any personal identifiers or contact information.

DOD Clearance Officer: Ms. Patricia Toppings.

Written requests for copies of the information collection proposal should be sent to Ms. Toppings at WHS/ESD/Information Management Division, 1777 North Kent Street, RPN, Suite 11000, Arlington, VA 22209–2133.

Dated: January 26, 2010.

Patricia L. Toppings,

OSD Federal Register Liaison Officer, Department of Defense.

[FR Doc. 2010–2452 Filed 2–4–10; 8:45 am]

BILLING CODE 5001–06–P

DEPARTMENT OF DEFENSE

Office of the Secretary

[Docket No. DOD–2010–DARS–0011]

Submission for OMB Review; Comment Request

ACTION: Notice.

The Department of Defense has submitted to OMB for clearance, the following proposal for collection of information under the provisions of the Paperwork Reduction Act (44 U.S.C. Chapter 35).

DATES: Consideration will be given to all comments received by March 8, 2010.

Title, Associated Forms and OMB Number: Defense Federal Acquisition Regulation Supplement (DFARS) Part 242, Contract Administration and Audit Services, and related clauses in DFARS Part 252; DD Form 1659, Application for U.S. Government Shipping Documentation/Instructions; OMB Control Number 0704–0250.

Type of Request: Extension.

Number of Respondents: 15,049.

Responses per Respondent: 7.037.

Annual Responses: 105,898.

Average Burden per Response: 2.6059 hours.

Annual Burden Hours: 275,960 hours.

Needs and Uses: DoD needs this information to perform contract administration functions. DoD uses the information as follows:

a. Contract administration offices use the information required by DFARS Subpart 242.11 to determine contractor progress and to identify any factors that may delay contract performance.

b. Administrative contracting officers use the information required by DFARS Subpart 242.73 to determine the allowability of insurance/pension costs under Government contracts.

c. Contract administration offices and transportation officers use the information required by DFARS 252.242–7003, and submitted on DD Form 1659, in providing Government bills of lading to contractors.

d. Contracting officers use the information required by DFARS 252.242–7004 to determine if contractor material management and accounting systems conform to established DoD standards.

Affected Public: Business or other for-profit; not-for-profit institutions.

Frequency: On occasion.

Respondent's Obligation: Required to obtain or retain benefits.

OMB Desk Officer: Ms. Jasmeet Seehra.

Written comments and recommendations on the proposed information collection should be sent to Ms. Seehra at the Office of Management and Budget, Desk Officer for DoD, Room 10236, New Executive Office Building, Washington, DC 20503.

You may also submit comments, identified by docket number and title, by the following method:

• *Federal eRulemaking Portal: http://www.regulations.gov.* Follow the instructions for submitting comments.

Instructions: All submissions received must include the agency name, docket number and title for this **Federal Register** document. The general policy for comments and other submissions from members of the public is to make these submissions available for public viewing on the Internet at *http://www.regulations.gov* as they are received without change, including any personal identifiers or contact information.

DOD Clearance Officer: Ms. Patricia Toppings.

Written requests for copies of the information collection proposal should be sent to Ms. Toppings at WHS/ESD/Information Management Division, 1777 North Kent Street, RPN, Suite 11000, Arlington, VA 22209–2133.

Dated: January 26, 2010.

Patricia L. Toppings,

OSD Federal Register Liaison Officer, Department of Defense.

[FR Doc. 2010–2451 Filed 2–4–10; 8:45 am]

BILLING CODE 5001–06–P

DEPARTMENT OF DEFENSE

Office of the Secretary

[Docket No. DoD–2009–OS–0120]

Submission for OMB Review; Comment Request

ACTION: Notice.

The Department of Defense has submitted to OMB for clearance, the following proposal for collection of information under the provisions of the Paperwork Reduction Act (44 U.S.C. Chapter 35).

DATES: Consideration will be given to all comments received by March 8, 2010.

Title and OMB Number: Acquisition Management Systems and Data Requirements Control List (AMSDL); Numerous Forms; OMB Control Number 0704–0188.

Type of Request: Extension.

Number of Respondents: 921.

Responses per Respondent: 432.

Annual Responses: 397,872.

Average Burden per Response: 66 hours.

Annual Burden Hours: 26,259,552 hours.

Needs and Uses: The Acquisition Management Systems and Data Requirements Control List (AMSDL) is a list of data requirements used in Department of Defense (DoD) contracts. The information collected will be used by DoD personnel and other DoD contractors to support the design, test, manufacture, training, operation, and maintenance of procured items, including weapons systems critical to the national defense.

Affected Public: Business or other for-profit; not-for-profit institutions.

Frequency: On occasion.

Respondent's Obligation: Required to obtain or retain benefits.

OMB Desk Officer: Ms. Jasmeet Seehra.

Written comments and recommendations on the proposed information collection should be sent to Ms. Seehra at the Office of Management and Budget, Desk Officer for DoD, Room 10236, New Executive Office Building, Washington, DC 20503.

You may also submit comments, identified by docket number and title, by the following method:

• *Federal eRulemaking Portal: http://www.regulations.gov.* Follow the instructions for submitting comments.

Instructions: All submissions received must include the agency name, docket number and title for this **Federal Register** document. The general policy for comments and other submissions from members of the public is to make these submissions available for public viewing on the Internet at *http://www.regulations.gov* as they are received without change, including any personal identifiers or contact information.

DOD Clearance Officer: Ms. Patricia Toppings.

Written requests for copies of the information collection proposal should be sent to Ms. Toppings at WHS/ESD/Information Management Division, 1777 North Kent Street, RPN, Suite 11000, Arlington, VA 22209–2133.

Dated: January 26, 2010.

Patricia L. Toppings,

OSD Federal Register Liaison Officer, Department of Defense.

[FR Doc. 2010–2447 Filed 2–4–10; 8:45 am]

BILLING CODE 5001–06–P

DEPARTMENT OF DEFENSE

Office of the Secretary

[Docket ID: DOD–2010–OS–0009]

Privacy Act of 1974; Systems of Records

AGENCY: Defense Logistics Agency, DoD.

ACTION: Notice to alter a system of records.

SUMMARY: The Defense Logistics Agency proposes to alter a system of records notice in its existing inventory of records systems subject to the Privacy Act of 1974 (5 U.S.C. 552a), as amended.

DATES: This proposed action will be effective without further notice on March 8, 2010, unless comments are received which result in a contrary determination.

ADDRESSES: You may submit comments, identified by docket number and title, by any of the following methods:

* *Federal Rulemaking Portal: http://www.regulations.gov.* Follow the instructions for submitting comments.

* *Mail:* Federal Docket Management System Office, 1160 Defense Pentagon, Washington, DC 20301–1160.

Instructions: All submissions received must include the agency name and docket number for this **Federal Register** document. The general policy for comments and other submissions from members of the public is to make these

submissions available for public viewing on the Internet at *http://www.regulations.gov* as they are received without change, including any personal identifiers or contact information.

FOR FURTHER INFORMATION CONTACT: Ms. Jody Sinkler at (703) 767–5045.

SUPPLEMENTARY INFORMATION: The Defense Logistics Agency systems of records notices subject to the Privacy Act of 1974 (5 U.S.C. 552a), as amended, have been published in the **Federal Register** and are available from the address above.

The proposed system reports, as required by 5 U.S.C. 552a(r) of the Privacy Act of 1974 as amended, were submitted on January 29, 2010, to the House Committee on Oversight and Government Reform, the Senate Committee on Homeland Security and Governmental Affairs, and the Office of Management and Budget (OMB) pursuant to paragraph 4c of Appendix I to OMB Circular No. A–130, "Federal Agency Responsibilities for Maintaining Records About Individuals," dated February 8, 1996 (February 20, 1996; 61 FR 6427).

Dated: February 1, 2010.

Mitchell S. Bryman,

Alternate OSD Federal Register Liaison Officer, Department of Defense.

S600.30

SYSTEM NAME:

Safety, Health, Injury, and Accident Records (November 9, 2006; 71 FR 65781).

CHANGES:

* * * * *

SYSTEM LOCATION:

Delete entry and replace with "Occupational Safety and Health Office, Headquarters, Defense Logistics Agency, ATTN: DES, 8725 John J. Kingman Road, Stop 6220, Fort Belvoir, VA 22060–6221, and the DLA Primary Level Field Activity Safety and Health Offices. Official mailing addresses are published as an appendix to DLA's compilation of systems of records notices."

* * * * *

CATEGORIES OF RECORDS IN THE SYSTEM:

Delete entry and replace with "Employee's name; Social Security Number (SSN) or foreign national number; title; grade; career group; gender; date of birth; home address; place of employment; photographs; safety, health, injury, and accident record case number; proposed or actual corrective action; where appropriate; the name of physician/health care professional providing treatment; company providing medical treatment; and the address of the medical providers. Information is collected on DLA Form 1591, Supervisory Mishap Report."

AUTHORITY FOR MAINTENANCE OF THE SYSTEM:

Delete entry and replace with "10 U.S.C. 136, Under Secretary of Defense for Personnel and Readiness; 29 U.S.C. 651 *et seq.,* The Occupational Safety and Health Act of 1970 (OSHA); E.O. 12196, Occupational Safety and Health Programs for Federal Employees; 29 CFR part 1960, Subpart I, Recordkeeping and Reporting Requirements for Federal Occupational Safety and Health Programs; DoD Instruction 6055.1, DoD Safety and Occupational Health (SOH) Program; DoD Instruction 6055.7, Mishap Notification, Investigation, Reporting, and Recordkeeping; and E.O. 9397 (SSN), as amended."

PURPOSE(S):

Delete entry and replace with "Information is collected to comply with regulatory reporting requirements. Details about the accident site will be used to identify and correct known or potential hazards and to formulate improved accident prevention programs. The data, with all personal identifiers removed, may be used to prepare statistical reports."

ROUTINE USES OF RECORDS MAINTAINED IN THE SYSTEM, INCLUDING CATEGORIES OF USERS AND THE PURPOSES OF SUCH USES:

"In addition to those disclosures generally permitted under 5 U.S.C. 552a(b) of the Privacy Act of 1974, these records contained therein may specifically be disclosed outside the DoD as a routine use pursuant to 5 U.S.C. 552a(b)(3) as follows:

Information from safety, health, injury, and accident records may be disclosed to the Department of Labor and Occupational Safety and Health Administration (OSHA), to comply with requirements of 29 CFR part 1960.

The DoD "Blanket Routine Uses" also apply to this system of records."

* * * * *

SAFEGUARDS:

Delete entry and replace with "The security risks associated with maintaining data in an electronic environment have been mitigated through administrative, technical and physical safeguards described in this document. The safeguards in place are commensurate with the risk and magnitude of harm resulting from the loss, misuse, or unauthorized access to or modification of the data. Administrative, physical and technical safeguards employed by the DLA, Safety and Occupational Health Division are commensurate with the sensitivity of personal data to ensure preservation of integrity and to preclude unauthorized use/disclosure. Access is limited to those individuals who require the records in performance of their official duties. These authorized personnel receive initial and Annual IA Training in the operation of security policies. Individuals requiring access to sensitive information are processed for access authorization in accordance with DoD personnel security policy. Access is further restricted by the use of a Common Access Card (CAC). Physical entry is restricted by the use of locks, guards, and administrative procedures."

* * * * *

SYSTEM MANAGER(S) AND ADDRESS:

Delete entry and replace with "Director, Occupational Safety and Health Office, Headquarters, Defense Logistics Agency, ATTN: DES, 8725 John J. Kingman Road, Stop 6220, Fort Belvoir, VA 22060–6221."

NOTIFICATION PROCEDURE:

Delete entry and replace with "Individuals seeking to determine whether information about themselves is contained in this system of records should address written inquiries to the Privacy Act Office, Headquarters, Defense Logistics Agency, ATTN: DGA, 8725 John J. Kingman Road, Suite 1644, Fort Belvoir, VA 22060–6221.

Inquiry should contain the individual's full name, Social Security Number (SSN), or safety, health, injury, and accident records case number (if known)."

RECORD ACCESS PROCEDURES:

Delete entry and replace with "Individuals seeking access to information about themselves contained in this system of records should address written inquiries to the Privacy Act Office, Headquarters, Defense Logistics Agency, ATTN: DGA, 8725 John J. Kingman Road, Suite 1644, Fort Belvoir, VA 22060–6221.

Inquiry should contain the individual's full name, Social Security Number (SSN), or safety, health, injury, and accident records case number (if known)."

CONTESTING RECORD PROCEDURES:

Delete entry and replace with "The DLA rules for accessing records, for contesting contents, and appealing initial agency determinations are contained in 32 CFR part 323, or may

be obtained from the Privacy Act Office, Headquarters, Defense Logistics Agency, ATTN: DGA, 8725 John J. Kingman Road, Suite 1644, Fort Belvoir, VA 22060–6221."

RECORD SOURCE CATEGORIES:

Delete entry and replace with "Record subject, supervisors, medical units, security offices, police, fire departments, investigating officers, witnesses to accident, or Defense Civilian Personnel Data System (DCPDS)."

* * * * *

S600.30

SYSTEM NAME:

Safety, Health, Injury, and Accident Records.

SYSTEM LOCATION:

Occupational Safety and Health Office, Headquarters, Defense Logistics Agency, ATTN: DES, 8725 John J. Kingman Road, Stop 6220, Fort Belvoir, VA 22060–6221, and the DLA Primary Level Field Activity Safety and Health Offices. Official mailing addresses are published as an appendix to DLA's compilation of systems of records notices.

CATEGORIES OF INDIVIDUALS COVERED BY THE SYSTEM:

All individuals who suffer accidents, become injured or ill, or otherwise require emergency rescue or medical assistance while on DLA facilities.

CATEGORIES OF RECORDS IN THE SYSTEM:

Employee's name; Social Security Number (SSN) or foreign national number; title; grade; career group; gender; date of birth; home address; place of employment; photographs; safety, health, injury, and accident record case number; proposed or actual corrective action; where appropriate; the name of physician/health care professional providing treatment; company providing medical treatment; and the address of the medical providers. Information is collected on DLA Form 1591, Supervisory Mishap Report.

AUTHORITY FOR MAINTENANCE OF THE SYSTEM:

10 U.S.C. 136, Under Secretary of Defense for Personnel and Readiness; 29 U.S.C. 651 *et seq.,* The Occupational Safety and Health Act of 1970 (OSHA); E.O. 12196, Occupational Safety and Health Programs for Federal Employees; 29 CFR part 1960, subpart I, Recordkeeping and Reporting Requirements for Federal Occupational Safety and Health Programs; DoD Instruction 6055.1, DoD Safety and Occupational Health (SOH) Program; DoD Instruction 6055.7, Mishap Notification, Investigation, Reporting, and Recordkeeping and E.O. 9397 (SSN), as amended.

PURPOSE(S):

Information is collected to comply with regulatory reporting requirements. Details about the accident site will be used to identify and correct known or potential hazards and to formulate improved accident prevention programs. The data, with all personal identifiers removed, may be used to prepare statistical reports.

ROUTINE USES OF RECORDS MAINTAINED IN THE SYSTEM, INCLUDING CATEGORIES OF USERS AND THE PURPOSES OF SUCH USES:

In addition to those disclosures generally permitted under 5 U.S.C. 552a(b) of the Privacy Act of 1974, these records contained therein may specifically be disclosed outside the DoD as a routine use pursuant to 5 U.S.C. 552a(b)(3) as follows:

Information from safety, health, injury, and accident records may be disclosed to the Department of Labor and Occupational Safety and Health Administration (OSHA), to comply with requirements of 29 CFR part 1960.

The DoD "Blanket Routine Uses" also apply to this system of records.

POLICIES AND PRACTICES FOR STORING, RETRIEVING, ACCESSING, RETAINING, AND DISPOSING OF RECORDS IN THE SYSTEM:

STORAGE:

Records may be stored on paper and/or on electronic storage media.

RETRIEVABILITY:

Retrieved by name, Social Security Number (SSN), or safety, health, injury, and accident records case number.

SAFEGUARDS:

The security risks associated with maintaining data in an electronic environment have been mitigated through administrative, technical and physical safeguards described in this document. The safeguards in place are commensurate with the risk and magnitude of harm resulting from the loss, misuse, or unauthorized access to or modification of the data. Administrative, physical and technical safeguards employed by the DLA, Safety and Occupational Health Division are commensurate with the sensitivity of personal data to ensure preservation of integrity and to preclude unauthorized use/disclosure. Access is limited to those individuals who require the records in performance of their official duties. These authorized personnel receive initial and Annual IA training in the operation of Security policies. Individuals requiring access to sensitive information are processed for access authorization in accordance with DoD personnel security policy. Access is further restricted by the use of a Common Access Card (CAC). Physical entry is restricted by the use of locks, guards, and administrative procedures.

RETENTION AND DISPOSAL:

Cases involving reportable mishaps are destroyed five years after case is closed. Cases involving non-reportable mishaps are destroyed three years after case is closed. Documentation of fire department activities and actions pertaining to fire/emergency calls are destroyed after 7 years.

SYSTEM MANAGER(S) AND ADDRESS:

Director, Occupational Safety and Health Office, Headquarters, Defense Logistics Agency, ATTN: DES, 8725 John J. Kingman Road, Stop 6220, Fort Belvoir, VA 22060–6221.

NOTIFICATION PROCEDURE:

Individuals seeking to determine whether information about themselves is contained in this system of records should address written inquiries to the Privacy Act Office, Headquarters, Defense Logistics Agency, ATTN: DGA, 8725 John J. Kingman Road, Suite 1644, Fort Belvoir, VA 22060–6221.

Inquiry should contain the individual's full name, Social Security Number (SSN), or safety, health, injury, and accident records case number (if known).

RECORD ACCESS PROCEDURES:

Individuals seeking access to information about themselves contained in this system of records should address written inquiries to the Privacy Act Office, Headquarters, Defense Logistics Agency, ATTN: DGA, 8725 John J. Kingman Road, Suite 1644, Fort Belvoir, VA 22060–6221.

Inquiry should contain the individual's full name, Social Security Number (SSN), or safety, health, injury, and accident records case number (if known).

CONTESTING RECORD PROCEDURES:

The DLA rules for accessing records, for contesting contents, and appealing initial agency determinations are contained in 32 CFR part 323, or may be obtained from the Privacy Act Office, Headquarters, Defense Logistics Agency, ATTN: DGA, 8725 John J. Kingman Road, Suite 1644, Fort Belvoir, VA 22060–6221.

RECORD SOURCE CATEGORIES:

Record subject, supervisors, medical units, security offices, police, fire

departments, investigating officers, witnesses to accident, or Defense Civilian Personnel Data System (DCPDS).

EXEMPTIONS CLAIMED FOR THE SYSTEM:

None.

[FR Doc. 2010–2441 Filed 2–4–10; 8:45 am]

BILLING CODE 5001–06–P

DEPARTMENT OF DEFENSE

Office of the Secretary

[Docket ID: DOD–2010–OS–0012]

Privacy Act of 1974; Systems of Records

AGENCY: Defense Logistics Agency, DoD.

ACTION: Notice to delete a system of records.

SUMMARY: The Defense Logistics Agency proposes to delete a system of records notice in its existing inventory of records systems subject to the Privacy Act of 1974, (5 U.S.C. 552a), as amended.

DATES: This proposed action will be effective without further notice on March 8, 2010 unless comments are received which result in a contrary determination.

ADDRESSES: You may submit comments, identified by dock number and title, by any of the following methods:

* *Federal Rulemaking Portal: http://www.regulations.gov*. Follow the instructions for submitting comments.

* *Mail:* Federal Docket Management System Office, 1160 Defense Pentagon, Washington, DC 20301–1160.

Instructions: All submissions received must include the agency name and docket number for this **Federal Register** document. The general policy for comments and other submissions from members of the public is to make these submissions available for public viewing on the Internet at *http://www.regulations.gov* as they are received without change, including any personal identifiers or contact information.

FOR FURTHER INFORMATION CONTACT: Jody Sinkler at (703) 767–5045.

SUPPLEMENTARY INFORMATION: The Defense Logistics Agency systems of records notices subject to the Privacy Act of 1974, (5 U.S.C. 552a), as amended, have been published in the **Federal Register** and are available from the contact under **FOR FURTHER INFORMATION CONTACT**.

The Agency proposes to delete a system of records notice in its inventory of record systems subject to the Privacy Act of 1974 (5 U.S.C. 552a), as amended. The proposed deletion is not within the purview of subsection (r) of the Privacy Act of 1974, (5 U.S.C. 552a), as amended, which requires the submission of a new or altered system report.

Dated: February 1, 2010.

Mitchell S. Bryman,

Alternate OSD Federal Register Liaison Officer, Department of Defense.

S200.50 CAH

SYSTEM NAME:

Individual Weight Management File (July 14, 1999; 64 FR 37941).

REASON:

Defense Logistics Agency no longer maintains this system of records. Existing records are returned to the military member.

[FR Doc. 2010–2445 Filed 2–4–10; 8:45 am]

BILLING CODE 5001–06–P

DEPARTMENT OF DEFENSE

Office of the Secretary

[Docket ID: DOD–2010–OS–0010]

Privacy Act of 1974; Systems of Records

AGENCY: National Security Agency/Central Security Service, DoD.

ACTION: Notice to alter a system of records.

SUMMARY: The National Security Agency (NSA) is proposing to alter a system of records notice in its inventory of record systems subject to the Privacy Act of 1974, (5 U.S.C. 552a), as amended.

DATES: This proposed action will be effective without further notice on March 8, 2010, unless comments are received which would result in a contrary determination.

ADDRESSES: You may submit comments, identified by docket number and title, by any of the following methods.

• *Federal eRulemaking Portal: http://www.regulations.gov.* Follow the instructions for submitting comments.

• *Mail:* Federal Docket Management System Office, 1160 Defense Pentagon, Washington, DC 20301–1160.

Instructions: All submissions received must include the agency name and docket number for this **Federal Register** document. The general policy for comments and other submissions from members of the public is to make these submissions available for public viewing on the Internet at *http://www.regulations.gov* as they are received without change, including any personal identifiers or contact information.

FOR FURTHER INFORMATION CONTACT: Ms. Anne Hill at (301) 688–6527.

SUPPLEMENTARY INFORMATION: The National Security Agency's systems of notices subject to the Privacy Act of 1974 (5 U.S.C. 552a), as amended, have been published in the **Federal Register** and are available from the address above.

The proposed system reports, as required by 5 U.S.C. 552a(r), of the Privacy Act of 1974, as amended, were submitted on January 29, 2010, to the House Committee on Oversight and Government Reform, the Senate Committee on Homeland Security and Governmental Affairs, and the Office of Management and Budget (OMB) pursuant to paragraph 4c of Appendix I to OMB Circular No. A–130, "Federal Agency Responsibilities for Maintaining Records About Individuals," dated February 8, 1996 (February 20, 1996; 61 FR 6427).

Dated: February 1, 2010.

Mitchell S. Bryman,

Alternate OSD Federal Register Liaison Officer, Department of Defense.

GNSA 15

SYSTEM NAME:

NSA/CSS Computer Users Control System (February 22, 1993; 58 FR 10531).

CHANGES:

* * * * *

AUTHORITY FOR MAINTENANCE OF THE SYSTEM:

Delete entry and replace with "Subchapter III of the Federal Information Security Management Act of 2002 (Title III of Pub. L. 107–347); Subtitle III of 40 U.S.C., Information Technology Management; 10 U.S.C. 2224, Defense Information Assurance Program; E.O. 12333, as amended, United States Intelligence Activities; Department of Defense Directive 8500.1, Information Assurance; Department of Defense Instruction 8500.2, Information Assurance Implementation and E.O. 9397 (SSN), as amended".

PURPOSE(S):

Delete entry and replace with "To administer, monitor, and track the use and access of NSA/CSS networks, computers, software, and databases. The records may also be used to identify the occurrence of and assist in the prevention of computer misuse".

ROUTINE USES OF RECORDS MAINTAINED IN THE SYSTEM, INCLUDING CATEGORIES OF USERS AND THE PURPOSES OF SUCH USES:

Delete entry and replace with "In addition to those disclosures generally permitted under 5 U.S.C. 552a(b) of the Privacy Act of 1974, these records contained therein may specifically be disclosed outside the DoD as a routine use pursuant to 5 U.S.C. 552a(b)(3) as follows:

To appropriate governmental agencies and the judicial branch where litigation or anticipated civil or criminal litigation is involved or where sensitive national security investigations related to protection of intelligence sources and methods are involved.

The "DoD Blanket Routine Uses" set forth at the beginning of the NSA/CSS' compilation of systems of records notices apply to this system."

STORAGE:

Delete entry and replace with "Paper in file folders and electronic storage media".

* * * * *

SAFEGUARDS:

Delete entry and replace with "Buildings are secured by a series of guarded pedestrian gates and checkpoints. Access to facilities is limited to security-cleared personnel and escorted visitors only. Within the facilities themselves, access to paper and computer printouts are controlled by limited-access facilities and lockable containers. Access to electronic means is controlled by computer password protection."

RETENTION AND DISPOSAL:

Delete entry and replace with "Delete/destroy when agency determines they are no longer needed for administrative, legal, audit, or other operational purposes.

Records are destroyed by pulping, burning, shredding, or erasure or destruction of electronic media."

SYSTEM MANAGER(S) AND ADDRESS:

Delete entry and replace with "Deputy Director, Enterprise Information Technology Services, National Security Agency/Central Security Service, Ft. George G. Meade, MD 20755–6000."

NOTIFICATION PROCEDURE:

Delete entry and replace with "Individuals seeking to determine whether information about themselves is contained in this system should address written inquiries to the National Security Agency/Central Security Service, Freedom of Information Act/Privacy Act Office, 9800 Savage Road, Ft. George G. Meade, MD 20755–6000.

Written inquiries should contain the individual's full name, Social Security Number (SSN) and mailing address."

RECORD ACCESS PROCEDURES:

Delete entry and replace with "Individuals seeking access to information about themselves contained in this system should address written inquiries to the National Security Agency/Central Security Service, Freedom of Information Act/Privacy Act Office, 9800 Savage Road, Ft. George G. Meade, MD 20755–6000.

Written inquiries should contain the individual's full name, Social Security Number (SSN) and mailing address."

CONTESTING RECORD PROCEDURES:

Delete entry and replace with "The NSA/CSS rules for contesting contents and appealing initial determinations are published at 32 CFR part 322 or may be obtained by written request addressed to the National Security Agency/Central Security Service, Freedom of Information Act/Privacy Act Office, 9800 Savage Road, Ft. George G. Meade, MD 20755–6000."

* * * * *

GNSA 15

SYSTEM NAME:

NSA/CSS Computer Users Control System.

SYSTEM LOCATION:

National Security Agency/Central Security Service, Ft. George G. Meade, MD 20755–6000.

CATEGORIES OF INDIVIDUALS COVERED BY THE SYSTEM:

Users of National Security Agency/Central Security Service computers and software.

CATEGORIES OF RECORDS IN THE SYSTEM:

The user's name, Social Security Number, an assigned identification (I.D.) code, organization, work phone number, terminal identification, system name, programs accessed or attempted to access, data files used and date and time logged onto and off the system.

AUTHORITY FOR MAINTENANCE OF THE SYSTEM:

Subchapter III of the Federal Information Security Management Act of 2002 (Title III of Pub. L. 107–347); Subtitle III of 40 U.S.C., Information Technology Management; 10 U.S.C. 2224, Defense Information Assurance Program; E.O. 12333, as amended, United States Intelligence Activities; Department of Defense Directive 8500.1, Information Assurance; Department of Defense Instruction 8500.2, Information Assurance Implementation and E.O. 9397 (SSN), as amended.

PURPOSE(S):

To administer, monitor, and track the use and access of NSA/CSS networks, computers, software, and databases. The records may also be used to identify the occurrence of and assist in the prevention of computer misuse.

ROUTINE USES OF RECORDS MAINTAINED IN THE SYSTEM, INCLUDING CATEGORIES OF USERS AND THE PURPOSES OF SUCH USES:

In addition to those disclosures generally permitted under 5 U.S.C. 552a(b) of the Privacy Act of 1974, these records contained therein may specifically be disclosed outside the DoD as a routine use pursuant to 5 U.S.C. 552a(b)(3) as follows:

To appropriate governmental agencies and the judicial branch where litigation or anticipated civil or criminal litigation is involved or where sensitive national security investigations related to protection of intelligence sources and methods are involved.

The "DoD Blanket Routine Uses" set forth at the beginning of the NSA/CSS' compilation of systems of records notices apply to this system.

POLICIES AND PRACTICES FOR STORING, RETRIEVING, ACCESSING, RETAINING, AND DISPOSING OF RECORDS IN THE SYSTEM:

STORAGE:

Paper in file folders and electronic storage media.

RETRIEVABILITY:

Records are retrieved by the user's name, Social Security Number, or assigned identification (I.D.) code.

SAFEGUARDS:

Buildings are secured by a series of guarded pedestrian gates and checkpoints. Access to facilities is limited to security-cleared personnel and escorted visitors only. Within the facilities themselves, access to paper and computer printouts are controlled by limited-access facilities and lockable containers. Access to electronic means is controlled by computer password protection.

RETENTION AND DISPOSAL:

Delete/destroy when agency determines they are no longer needed for administrative, legal, audit, or other operational purposes.

Records are destroyed by pulping, burning, shredding, or erasure or destruction of electronic media.

SYSTEM MANAGER(S) AND ADDRESS:

Deputy Director, Enterprise Information Technology Services, National Security Agency/Central Security Service, Ft. George G. Meade, MD 20755–6000.

NOTIFICATION PROCEDURE:

Individuals seeking to determine whether information about themselves is contained in this system should address written inquiries to the National Security Agency/Central Security Service, Freedom of Information Act/Privacy Act Office, 9800 Savage Road, Ft. George G. Meade, MD 20755–6000.

Written inquiries should contain the individual's full name, Social Security Number (SSN) and mailing address.

RECORD ACCESS PROCEDURES:

Individuals seeking access to information about themselves contained in this system should address written inquiries to the National Security Agency/Central Security Service, Freedom of Information Act/Privacy Act Office, 9800 Savage Road, Ft. George G. Meade, MD 20755–6000.

Written inquiries should contain the individual's full name, Social Security Number (SSN) and mailing address.

CONTESTING RECORD PROCEDURES:

The NSA/CSS rules for contesting contents and appealing initial determinations are published at 32 CFR part 322 or may be obtained by written request addressed to the National Security Agency/Central Security Service, Freedom of Information Act/Privacy Act Office, 9800 Savage Road, Ft. George G. Meade, MD 20755–6000.

RECORD SOURCE CATEGORIES:

Contents of the record are obtained from the individual about whom the record pertains, from administrative personnel and computer system administrators, and a self-generated computer program.

EXEMPTIONS CLAIMED FOR THE SYSTEM:

Portions of this file may be exempt pursuant to 5 U.S.C. 552a(k)(2), as applicable.

Investigative material compiled for law enforcement purposes may be exempt pursuant to 5 U.S.C. 552a(k)(2). However, if an individual is denied any right, privilege, or benefit for which he would otherwise be entitled by Federal law or for which he would otherwise be eligible, as a result of the maintenance of such information, the individual will be provided access to such information except to the extent that disclosure would reveal the identity of a confidential source.

An exemption rule for this record system has been promulgated according to the requirements of 5 U.S.C. 553(b)(1), (2), and (3), (c) and (e) and published in 32 CFR part 322. For additional information contact the system manager.

[FR Doc. 2010–2442 Filed 2–4–10; 8:45 am]

BILLING CODE 5001–06–P

DEPARTMENT OF DEFENSE

Department of the Air Force

[Docket ID USAF–2009–0060]

Submission for OMB Review; Comment Request

ACTION: Notice.

The Department of Defense has submitted to OMB for clearance, the following proposal for collection of information under the provisions of the Paperwork Reduction Act (44 U.S.C. Chapter 35).

DATES: Consideration will be given to all comments received by March 8, 2010.

Title, Form, and OMB Number: USAF Heritage Program Volunteer Application/Registration, AF IMT 3569, V1; OMB Control Number 0701–0127.

Type of Request: Extension.

Number of Respondents: 198.

Responses per Respondent: 1.

Annual Responses: 198.

Average Burden per Response: 15 minutes.

Annual Burden Hours: 49.5.

Needs and Uses: The information collection requirement is necessary to provide (a) the general public an instrument to interface with the USAF Heritage Program Volunteer Program; (b) the USAF Heritage Program the means with which to select respondents pursuant to the USAF Heritage Program Volunteer Program. The primary use of the information collection includes the evaluation and placement of respondents within the USAF Heritage Program Volunteer Program.

Affected Public: Individuals or households.

Frequency: On occasion.

Respondent's Obligation: Required to obtain or retain benefits.

OMB Desk Officer: Ms. Jasmeet Seehra.

Written comments and recommendations on the proposed information collection should be sent to Ms. Seehra at the Office of Management and Budget, Desk Officer for DoD, Room 10236, New Executive Office Building, Washington, DC 20503.

You may also submit comments, identified by docket number and title, by the following method:

• *Federal eRulemaking Portal: http://www.regulations.gov.* Follow the instructions for submitting comments.

Instructions: All submissions received must include the agency name, docket number and title for this **Federal Register** document. The general policy for comments and other submissions from members of the public is to make these submissions available for public viewing on the Internet at *http://www.regulations.gov* as they are received without change, including any personal identifiers or contact information.

DOD Clearance Officer: Ms. Patricia Toppings.

Written requests for copies of the information collection proposal should be sent to Ms. Toppings at WHS/ESD/Information Management Division, 1777 North Kent Street, RPN, Suite 11000, Arlington, VA 22209–2133.

Dated: January 26, 2010.

Patricia L. Toppings,

OSD Federal Register Liaison Officer, Department of Defense.

[FR Doc. 2010–2448 Filed 2–4–10; 8:45 am]

BILLING CODE 5001–06–P

DEPARTMENT OF DEFENSE

Department of the Army

[Docket ID: USA–2009–0032]

Submission for OMB Review; Comment Request

ACTION: Notice.

The Department of Defense has submitted to OMB for clearance, the following proposal for collection of information under the provisions of the Paperwork Reduction Act (44 U.S.C. Chapter 35).

DATES: Consideration will be given to all comments received by March 8, 2010.

Title, Form, and OMB Number: Application and Agreement for Establishment of a National Defense Cadet Corps Unit, DA Form 3126–1, OMB Control Number 0702–0110.

Type of Request: Extension.

Number of Respondents: 35.

Responses per Respondent: 1.

Annual Responses: 35.

Average Burden per Response: 1 hour.

Annual Burden Hours: 35 hours.

Needs and Uses: Educational institutions desiring to host a National Defense Cadet Corps Unit (NDCC) may apply by using a DA Form 3126–1. The DA Form 3126–1 documents the agreement and becomes a contract signed by both the secondary institution and the U.S. Government. This form provides information on the school's facilities and states specific conditions if a NDCC unit is placed at the institution. The data provided on the applications is used to determine which school will be selected.

Affected Public: State, local or tribal government; not-for-profit institution.

Frequency: On occasion.

Respondent's Obligation: Required to obtain or retain benefits.

OMB Desk Officer: Ms. Jasmeet Seehra.

Written comments and recommendations on the proposed information collection should be sent to Ms. Seehra at the Office of Management and Budget, Desk Officer for DoD, Room 10236, New Executive Office Building, Washington, DC 20503.

You may also submit comments, identified by docket number and title, by the following method:

• *Federal eRulemaking Portal: http://www.regulations.gov.* Follow the instructions for submitting comments.

Instructions: All submissions received must include the agency name, docket number and title for this **Federal Register** document. The general policy for comments and other submissions from members of the public is to make these submissions available for public viewing on the Internet at *http://www.regulations.gov* as they are received without change, including any personal identifiers or contact information.

DOD Clearance Officer: Ms. Patricia Toppings.

Written requests for copies of the information collection proposal should be sent to Ms. Toppings at WHS/ESD/Information Management Division, 1777 North Kent Street, RPN, Suite 11000, Arlington, VA 22209–2133.

Dated: January 26, 2010.

Patricia L. Toppings,

OSD Federal Register Liaison Officer, Department of Defense.

[FR Doc. 2010–2449 Filed 2–4–10; 8:45 am]

BILLING CODE 5001–06–P

DEPARTMENT OF DEFENSE

Department of the Air Force

[Docket ID USAF–2009–0052]

Submission for OMB Review; Comment Request

ACTION: Notice.

The Department of Defense has submitted to OMB for clearance, the following proposal for collection of information under the provisions of the Paperwork Reduction Act (44 U.S.C. Chapter 35).

DATES: Consideration will be given to all comments received by March 8, 2010.

Title, Form, and OMB Number: Air Force Academy Secondary School Transcript; USAF Form 148; OMB Number 0701–0066.

Type of Request: Extension.

Number of Respondents: 7,954.

Responses per Respondent: 1.

Annual Responses: 7,954.

Average Burden per Response: .75 hours.

Annual Burden Hours: 5,966 hours.

Needs and Uses: The information collection requirement is necessary to obtain data on candidate's background and aptitude in determining eligibility and selection to the Air Force Academy.

Affected Public: Individuals or households.

Frequency: On occasion.

Respondent's Obligation: Required to obtain or retain benefits.

OMB Desk Officer: Ms. Jasmeet Seehra.

Written comments and recommendations on the proposed information collection should be sent to Ms. Seehra at the Office of Management and Budget, Desk Officer for DoD, Room 10236, New Executive Office Building, Washington, DC 20503.

You may also submit comments, identified by docket number and title, by the following method:

• *Federal eRulemaking Portal:* http://www.regulations.gov. Follow the instructions for submitting comments.

Instructions: All submissions received must include the agency name, docket number and title for this **Federal Register** document. The general policy for comments and other submissions from members of the public is to make these submissions available for public viewing on the Internet at *http://www.regulations.gov* as they are received without change, including any personal identifiers or contact information.

DOD Clearance Officer: Ms. Patricia Toppings.

Written requests for copies of the information collection proposal should be sent to Ms. Toppings at WHS/ESD/Information Management Division, 1777 North Kent Street, RPN, Suite 11000, Arlington, VA 22209–2133.

Dated: January 26, 2010.

Patricia L. Toppings,

OSD Federal Register Liaison Officer, Department of Defense.

[FR Doc. 2010–2446 Filed 2–4–10; 8:45 am]

BILLING CODE 5001–06–P

DEPARTMENT OF DEFENSE

Department of the Army

Preparation of a Programmatic Environmental Impact Statement (PEIS) for the Stationing and Operation of Joint High Speed Vessels (JHSVs)

AGENCY: Department of the Army, DoD.

ACTION: Notice of intent.

SUMMARY: The Army intends to prepare a PEIS for the proposed stationing and operation of up to 12 JHSVs. The JHSV is a strategic transport vessel that is designed to support the rapid transport of Army Soldiers, other military personnel and equipment in the U.S. and abroad. The PEIS will assess the potential environmental impacts associated with the proposed stationing of JHSVs at the following military port locations: Virginia Tidewater area; San Diego, CA area; Seattle-Tacoma, WA area; Pearl Harbor, HI area; and Guam. These locations were selected based on the following criteria: sites have existing military port facilities that do not require new infrastructure construction or improvements; sites have existing maintenance facilities for up to, but not including, depot level facilities for major JHSV repairs and maintenance; and sites are capable of supporting the strategic needs of the nation's Combatant Commanders. Not all of the proposed ports will receive JHSVs and other viable locations raised during public scoping may be considered as stationing sites. The Army's Record of Decision will make the determination as to which of the potential sites will serve as home port locations.

The Army intends to consider the following alternatives in the PEIS: (1) The stationing and operation of an Army-wide total of five JHSVs at military port facilities in the U.S. or U.S. territories, with up to three JHSVs at any one of the aforementioned locations; (2) The stationing and operation of an Army-wide total of up to 12 JHSVs at military port facilities in the U.S. or U.S. territories and overseas locations operated by the U.S. military, with up to three JHSV's being stationed at any one location; and (3) The no action alternative which retains the Army's existing transport fleet and does not equip the Army with JHSVs. Under the no action alternative, the Army would not be able to increase its expeditionary capability as discussed as a key requirement in the Quadrennial Defense Review (QDR) nor would it meet the rapid deployment goals of Army Transformation.

The JHSV will require fueling-at-sea training; aviation training (helicopter);

live fire training; and high-speed, open-water-craft training. It is anticipated that the vessel will spend 150 days or more away from the home station. These home-station sites would only be used to support JHSV berthing and training requirements in and around the stationing location for 170 days per year. An annual maintenance cycle of approximately 45 days would occur at the home station or at another location, if appropriate maintenance facilities are not on site. The PEIS will include evaluation of the different locations which could reasonably accommodate, support, and sustain the JHSV and meet its requirements for live-fire training.

The proposed action will require the Army to balance strategic, sustainment, and environmental considerations to provide greater flexibility and responsiveness to meet today's evolving world conditions and threats to national defense and security. The PEIS will analyze the proposed action's impacts upon the natural, cultural, and manmade environments at the alternative home-stationing sites.

ADDRESSES: *Comments may be sent to:* Public Affairs Office, U.S. Army Environmental Command, *Attention:* IMAE–PA, 5179 Hoadley Rd., Aberdeen Proving Ground, MD 21010–5401.

FOR FURTHER INFORMATION CONTACT: Public Affairs Office at (410) 436–2556; fax (410) 436–1693; or *e-mail: APGR-USAECNEPA@conus.army.mil.*

SUPPLEMENTARY INFORMATION: The JHSV is a high-speed, shallow-draft vessel capable of rapid intratheater transport of Army units. JHSV stationing detachments consist of a 31 member crew and can accommodate up to 350 additional Soldiers. The vessel can reach speeds of 35–45 knots and has an equipment carrying capacity of approximately 700 short tons. It has a shallow draft of 12.5 feet for enhanced port access for the types of austere piers and quay walls common in developing countries. The JHSV includes a weapons mount for crew served weapons, a flight deck for helicopter operations, and an off-load ramp that allows vehicles to drive off the ship quickly. These characteristics make the JHSV an extremely flexible asset, able to support a wide range of operations including maneuver and sustainment, relief operations in small or damaged ports, flexible logistics support, or as the key enabler for rapid transport.

The National Environmental Policy Act (NEPA) of 1969 (42 U.S.C. & *et seq.*) and the Army NEPA procedures, Environmental Analysis of Army Action (32 CFR Part 651), require the Army to consider the environmental impacts of its actions and alternatives, and to solicit the views of the public so it can make an informed final decision regarding how to proceed. The Army is working in close coordination with the Navy (which is scheduled to receive 10 JHSVs) in coordinating NEPA evaluations for this action. The Navy is completing a separate NEPA document to evaluate its requirements for the JHSV. The Army's PEIS does not evaluate the direct and indirect environmental impacts of the Navy's JHSV program. The Army's PEIS will cumulatively consider the impacts of Navy JHSV stationing.

The PEIS will assess, consider, and compare the direct, indirect, and cumulative environmental effects from the stationing of up to three Army JHSVs per site. The primary environmental issues to be analyzed will include potential impacts to air quality, airspace, cultural resources, noise, and marine life. In addition, the Army will consider those issues identified as the part of the scoping process.

Scoping and Public Comment: All interested members of the public, including native communities and federally recognized Native American Tribes, Native Hawaiian groups, Guam Chamorro Groups, and federal, state, and local agencies, are invited to participate in the scoping process for the preparation of this PEIS. Written comments identifying environmental issues, concerns and opportunities to be analyzed in the PEIS will be accepted for 30 days following publication of the Notice of Intent in the **Federal Register.** There will be no on-site scoping meetings.

Dated: January 25, 2010.

Addison D. Davis, IV,

Deputy Assistant Secretary of the Army (Environment, Safety, and Occupational Health).

[FR Doc. 2010–2142 Filed 2–4–10; 8:45 am]

BILLING CODE 3710–08–M

DEPARTMENT OF DEFENSE

Department of the Army; U.S. Army Corps of Engineers

Notice of Intent To Prepare a Draft Environmental Impact Statement and Dam Safety Assurance Program Modification Report for the Isabella Dam Project, Kern County, CA

AGENCY: Department of the Army, U.S. Army Corps of Engineers; DOD.

ACTION: Notice of intent.

SUMMARY: Pursuant to the National Environmental Policy Act of 1969, as amended, the U.S. Army Corps of Engineers, Sacramento District (Corps), in cooperation with the U.S. Forest Service, Sequoia National Forest, intends to prepare a draft Environmental Impact Statement (EIS) for the Federal action to remediate seismic, seepage, and hydrologic dam safety concerns at the Isabella Lake main and auxiliary dams. Isabella Lake is located on the Kern River approximately 45 miles northeast of Bakersfield, Kern County, California. The proposed action is being conducted through the Corps' Dam Safety Assurance Program (DSAP) for the evaluation of existing dams.

ADDRESSES: Current and archival information regarding the Isabella Lake DSAP Project can be obtained from the following Web site address: *http://www.spk.usace.army.mil/projects/civil/Lake_Isabella_Dam/Index.html.* Questions or comments regarding the Isabella Lake DSAP Project may be submitted through this Web site, or written questions or comments can be submitted by mail to Mr. Mitch Stewart, U.S. Army Corps of Engineers, Sacramento District, Attn: Planning Division (CESPK–PD–R), 1325 J Street, Sacramento, CA 95814. Requests to be placed on a mailing list may also be submitted through the Web site or to the address provided above.

FOR FURTHER INFORMATION CONTACT: Mr. Mitch Stewart at (916) 557–6734, e-mail *Mitch.W.Stewart@usace.army.mil,* or by mail to (see **ADDRESSES**).

SUPPLEMENTARY INFORMATION:

1. *Background Information.* Based on current engineering knowledge, the Corps has determined that the Isabella Lake main and auxiliary dams have a high risk of failure due to significant seismic, seepage, and hydrologic issues that exist. An external peer review panel, commissioned by the Corps, has recently confirmed that the Corps' Class I designation "Urgent and Compelling" is appropriate for the Isabella Lake dams for several reasons:

a. A possibility of piping along the outlet conduit of its auxiliary dam (piping may be defined as fissures or openings through which water can travel inside the dam);

b. Evidence that the auxiliary dam's drain blanket is not performing as intended;

c. Studies find that the Kern Canyon Fault, under the auxiliary dam's right abutment, is active;

d. Evidence that the upper 20 feet of the auxiliary dam's foundation is loose

and might be subject to loss of shear strength during seismic loading;

e. Hydrologic studies indicate that the spillway is inadequate; and

f. Extremely high consequences of failure.

The panel recommended short-term risk reduction measures such as maintaining the current reservoir pool restriction elevation of 2,585.5 feet, 20 feet below normal pool. The panel also recommended long-term risk reduction measures including completion of on-going studies of major rehabilitation of the auxiliary dam and evaluation of the main dam's overall earthquake performance.

2. *Remediation Alternatives.* The draft EIS will address an array of remediation alternatives that are necessary to prevent loss of life, extensive downstream damage, functional loss of the project, and the loss of all project benefits. The exact nature and extent of the remediation alternatives will be determined based on the results of on-going geotechnical and engineering studies, public and agency input during the scoping period, and preparation of the draft EIS.

3. *Issues To Be Addressed.* The draft EIS will address environmental issues concerning the remediation alternatives proposed. Issues will be identified based on public input during the scoping process and during the preparation of the draft EIS. Issues initially identified as potentially significant include, but are not limited to: Soils and seismicity, hydrology and water quality, noise and vibration, air quality, socioeconomics, water supply, land use, recreation, visual and aesthetic resources, traffic and transportation, historical and cultural resources, vegetation and wildlife, special status species, and fisheries.

4. *Public Involvement.* Public scoping meetings will be held in May 2010 at specific locations to be announced within the local Isabella Lake DSAP Project area and in Bakersfield, California. The purpose of the public scoping meetings will be to present information to the public regarding the array of remediation alternatives proposed that may be addressed in the draft EIS, receive public comments, and solicit input regarding environmental issues of concern to the public. These meetings are intended to initiate the process to involve concerned individuals, and local, State, and Federal agencies. The public scoping meeting place, date, and time will be advertised in advance in local newspapers, and meeting announcement letters will be sent to interested parties. Written comments may also be submitted via Web site or mail to (see **ADDRESSES**).

5. *Availability of the Draft EIS.* The Corps intends to issue the draft EIS in May 2011. The Corps will announce availability of the draft EIS in the **Federal Register** and other media, and will provide the public, organizations, and agencies with an opportunity to submit comments to be addressed in the final EIS.

Dated: January 26, 2010.

Thomas Chapman,

Commander, Sacramento District, U.S. Army Corps of Engineers.

[FR Doc. 2010–2510 Filed 2–4–10; 8:45 am]

BILLING CODE 3720–58–P

DEPARTMENT OF DEFENSE

Department of the Air Force

[Docket ID: USAF–2010–0004]

Privacy Act of 1974; System of Records

AGENCY: Department of the Air Force, DoD.

ACTION: Notice to add a system of records.

SUMMARY: The Department of the Air Force is proposing to add a system of records to its existing inventory of records systems subject to the Privacy Act of 1974, (5 U.S.C. 552a), as amended.

DATES: The proposed action will be effective on March 8, 2010 unless comments are received that would result in a contrary determination.

ADDRESSES: You may submit comments, identified by docket number and title, by any of the following methods.

- *Federal eRulemaking Portal: http://www.regulations.gov.* Follow the instructions for submitting comments.
- *Mail:* Federal Docket Management System Office, 1160 Defense Pentagon, Room 3C843, Washington, DC 20301–1160.

Instructions: All submissions received must include the agency name and docket number for this **Federal Register** document. The general policy for comments and other submissions from members of the public is to make these submissions available for public viewing on the Internet at *http://www.regulations.gov* as they are received without change, including any personal identifiers or contact information.

FOR FURTHER INFORMATION CONTACT: Mr. Ben Swilley at (703) 696–6172.

SUPPLEMENTARY INFORMATION: The Department of the Air Force systems of records notices subject to the Privacy Act of 1974, (5 U.S.C. 552a), as amended, have been published in the **Federal Register** and are available from the address above.

The proposed system report, as required by 5 U.S.C. 552a(r) of the Privacy Act of 1974, as amended, was submitted on January 29, 2010, to the House Committee on Oversight and Government Reform, the Senate Committee on Homeland Security and Governmental Affairs, and the Office of Management and Budget (OMB) pursuant to paragraph 4c of Appendix I to OMB Circular No. A–130, "Federal Agency Responsibilities for Maintaining Records About Individuals," dated February 8, 1996 (February 20, 1996; 61 FR 6427).

Dated: February 1, 2010.

Mitchell S. Bryman,

Alternate OSD Federal Register Liaison Officer, Department of Defense.

F065 AF FMP A

SYSTEM NAME:

eFinance Workspace

SYSTEM LOCATION:

Commander, 88th Communications Squadron, Wright Patterson AFB, OH 45433–5344.

CATEGORIES OF INDIVIDUALS COVERED BY THE SYSTEM:

Current Air Force military personnel (Active Duty, Reserve, Air National Guard), family members of Air Force service members and Air Force civilian employees.

CATEGORIES OF RECORDS IN THE SYSTEM:

Name, Social Security Numbers (SSN), rank/grade, service number, marital status, the number of dependents claimed for pay purposes, home and unit location data. Specific information requested for dependents are name, age, date of birth, (used for travel calculation) and residence address to determine entitlement rate for basic allowance for housing.

AUTHORITY FOR MAINTENANCE OF THE SYSTEM:

10 U.S.C. 8013, Department of the Air Force; 10 U.S.C. 8032, The Air Staff, general duties; DoD Financial Management Regulation 7000.14–R, Volume 7A, Military Pay Policy and Procedures, Active Duty and Reserve Pay; The Joint Federal Travel Regulations, Volume 1, Uniformed Service Members; The Joint Travel Regulations, Volume 2, Civilian Personnel; Air Force Instruction 65–114, Travel—Policy and Procedures For Financial Services Offices and Finance Offices—Reserve Component; Air Force

Manual 65–116 V2, Defense Joint Military Pay System Active Component (DJMS–AC) Unit Procedures Excluding Financial Services Office; and E.O. 9397 (SSN), as amended.

PURPOSE(S):

The eFinance system allows active duty members the ability to complete their Permanent Change of Station (PCS) voucher and assignment to their new duty station transactions for pay purposes without an interface with the base Financial Services Office (FSO). Additionally, it will allow military personnel to create pay affecting transactions using a digital signature and routing to the appropriate approval authority and to generate documentation and transactions associated with Temporary Duty Travel (TDY) settlement and advance claims.

ROUTINE USES OF RECORDS MAINTAINED IN THE SYSTEM, INCLUDING CATEGORIES OF USERS AND THE PURPOSES OF SUCH USES:

In addition to those disclosures generally permitted under 5 U.S.C. 552a(b) of the Privacy Act of 1974, these records contained therein may specifically be disclosed outside the DoD as a routine use pursuant to 5 U.S.C. 552a(b) as follows:

The DoD 'Blanket Routine Uses' published at the beginning of the Air Force's compilation of systems of records notices apply to this system.

Policies and practices for storing, retrieving, accessing, retaining and disposing of records in the system:

STORAGE:

Electronic storage media.

RETRIEVABILITY:

Individual's name, Social Security Number (SSN) and/or service number.

SAFEGUARDS:

Electronic records are maintained within secured buildings in areas accessible only to persons having official need to know, and who are properly trained and screened. In addition, the system will be a controlled system with passwords, and Common Access Card (CAC) governing access to data.

RETENTION AND DISPOSAL:

Records are destroyed when no longer needed for reference and/or for conducting business. Records are destroyed by erasing.

SYSTEM MANAGER(S) AND ADDRESS:

System Program Manager (SPM), Air Force Financial Systems Operations (AFFSO), Secretary of the Air Force for Financial Management Operations (SAF/FMP), SAF/FMP Air Force Financial Systems Office, 1940 Allbrook Dr., Bldg 1, Wright Patterson Air Force Base, Ohio 45433–5344.

NOTIFICATION PROCEDURE:

Individuals seeking to determine whether information about themselves is contained in this system should address written inquiries to the Director, SAF/FMP Air Force Financial Systems Office, 1940 Allbrook Dr., Bldg 1, Wright Patterson Air Force Base, Ohio 45433–5344.

For verification purposes, individuals should provide their full name, Social Security Number (SSN), record type (if known) which may assist in locating records, and their signature.

In addition, the requester must provide a notarized statement or an unsworn declaration made in accordance with 28 U.S.C. 1746, in the following format:

If executed outside the United States:

''I declare (or certify, verify, or state) under penalty of perjury under the laws of the United States of America that the foregoing is true and correct. Executed on (date). (Signature).''

If executed within the United States, its territories, possessions, or commonwealths:

''I declare (or certify, verify, or state) under penalty of perjury under the laws of the United States of America that the foregoing is true and correct. Executed on (date). (Signature).''

RECORD ACCESS PROCEDURES:

Individuals seeking access to information about themselves contained in this system should address requests to the Director, SAF/FMP Air Force Financial Systems Office, 1940 Allbrook Dr., Bldg 1, Wright Patterson Air Force Base, Ohio 45433–5344.

For verification purposes, individuals should provide their full name, Social Security Number (SSN), record type (if known) which may assist in locating records, and their signature.

In addition, the requester must provide a notarized statement or an unsworn declaration made in accordance with 28 U.S.C. 1746, in the following format:

If executed outside the United States:

''I declare (or certify, verify, or state) under penalty of perjury under the laws of the United States of America that the foregoing is true and correct. Executed on (date). (Signature).''

If executed within the United States, its territories, possessions, or commonwealths:

''I declare (or certify, verify, or state) under penalty of perjury under the laws of the United States of America that the foregoing is true and correct. Executed on (date). (Signature).''

CONTESTING RECORD PROCEDURES:

The Air Force rules for access to records, and for contesting and appealing initial agency determinations by the individual concerned are published in Air Force Instruction 33–332, Privacy Act Program, 32 CFR Part 806b, or may be obtained from the system manager.

RECORD SOURCE CATEGORIES:

From the individual.

EXEMPTIONS CLAIMED FOR THE SYSTEM:

None.

[FR Doc. 2010–2444 Filed 2–4–10; 8:45 am]

BILLING CODE 5001–06–P

DEPARTMENT OF EDUCATION

Office of Safe and Drug-Free Schools; Cooperative Civic Education and Economic Education Exchange Program

Catalog of Federal Domestic Assistance (CFDA) Number: 84.304A.

ACTION: Correction; Notice inviting applications for new awards for fiscal year (FY) 2010.

SUMMARY: On January 20, 2010, we published in the **Federal Register** (75 FR 3212) a notice inviting applications for FY 2010 for the Cooperative Civic Education and Economic Education Exchange Program. The notice stated that a list of eligible countries was included in the application package (75 FR 3214). The list of eligible countries included in the application package at the time the notice inviting applications for FY 2010 was published was the list that was used in the FY 2009 program grant competition. However, an updated list of eligible countries has since been approved for FY 2010. The new list of eligible countries for FY 2010 is included in an updated application package that has been posted to the following Department of Education Web sites: *http://e-Grants.ed.gov* and *http://www.ed.gov/programs/coopedexchange/applicant.html.* Therefore, in order to give applicants adequate time to access the updated application package, we are changing the deadline for the submission of applications to March 15, 2010. With this change in the deadline date, we are also changing the deadline date for intergovernmental review. The specific changes to be made are as follows:

On page 3213, the first column, the date listed for Deadline for Transmittal

of Applications is changed to read "March 15, 2010."

On page 3213, the first column, the date listed for Deadline for Intergovernmental Review is changed to read "May 14, 2010."

On page 3214, third column, the date listed for Deadline for Transmittal of Applications is changed to read "March 15, 2010."

On page 3214, third column, the date listed for Deadline for Intergovernmental Review is changed to read "May 14, 2010."

FOR FURTHER INFORMATION CONTACT: Rita Foy Moss, U.S. Department of Education, 400 Maryland Avenue, SW., Potomac Center Plaza, Room 10006, Washington, DC 20202. Telephone: (202) 245–7866, or by e-mail at *rita.foy.moss@ed.gov.*

If you use a telecommunications device for the deaf (TDD), call the Federal Relay Service (FRS), toll-free, at 1–800–877–8339.

Accessible Format: Individuals with disabilities can obtain this document in an alternative format (e.g., Braille, large print, audiotape, or computer diskette) on request to the contact person listed under **FOR FURTHER INFORMATION CONTACT**.

Electronic Access to This Document: You can view this document, as well as all other documents of this Department published in the **Federal Register,** in text or Adobe Portable Document Format (PDF) on the Internet at the following site: *http://www.ed.gov/news/fedregister.*

To use PDF you must have Adobe Acrobat Reader, which is available free at this site.

Note: The official version of this document is the document published in the **Federal Register**. Free Internet access to the official edition of the **Federal Register** and the Code of Federal Regulations is available on GPO Access at: *http://www.gpoaccess.gov/nara/index.html.*

Dated: February 2, 2010.

Kevin Jennings,

Assistant Deputy Secretary for Safe and Drug-Free Schools.

[FR Doc. 2010–2555 Filed 2–4–10; 8:45 am]

BILLING CODE 4000–01–P

DEPARTMENT OF EDUCATION

Office of Innovation and Improvement; Overview Information; School Leadership Grant Program; Notice Inviting Applications for New Awards for Fiscal Year (FY) 2010

Catalog of Federal Domestic Assistance (CFDA) Number: 84.363A.

DATES: *Applications Available:* February 9, 2010.

Deadline for Notice of Intent to Apply: March 8, 2010.

Date of Pre-Application Meetings: February 19, 2010.

Deadline for Transmittal of Applications: April 6, 2010.

Deadline for Intergovernmental Review: June 7, 2010.

Full Text of Announcement

I. Funding Opportunity Description

Purpose of Program: The School Leadership Grant Program (SLP) is designed to assist high-need local educational agencies (LEAs) in recruiting and training principals (including assistant principals) through such activities as:

- Providing financial incentives to aspiring new principals.
- Providing stipends to principals who mentor new principals.
- Carrying out professional development programs in instructional leadership and management.
- Providing incentives that are appropriate for teachers or individuals from other fields who want to become principals and that are effective in retaining new principals.

Priorities: Under this competition we are particularly interested in applications that address the following three invitational priorities.

Invitational Priorities: For FY 2010, these priorities are invitational priorities. Under 34 CFR 75.105(c)(1), we do not give an application that meets the invitational priorities a competitive or absolute preference over other applications.

These priorities are:

1. Projects that develop and implement, enhance, or expand innovative programs to build the capacity of principals (including assistant principals) to lead and achieve teaching and learning gains in persistently lowest-achieving schools.

2. Projects that demonstrate evidence of the LEA's commitment to identify, implement, and support school conditions that facilitate efforts by the principals (including assistant principals) prepared by this program to improve persistently lowest-achieving schools.

3. Projects that collect and use student achievement data to assess the effect of principals (including assistant principals) prepared through this program on student learning and for continuous program improvement.

Note: Applicants are encouraged to describe their methods or strategies for collecting and using data to assess the impact of participants prepared through the project on student learning in the participants' schools. Applicants also are strongly encouraged to describe how these data will be used for continuous program improvement.

Background: The Secretary has set an ambitious goal of turning around the nation's 5,000 lowest-achieving schools over the next five years, as part of a broader strategy to reduce the dropout rate, improve the high school graduation rate, and increase the number of students who graduate prepared for success in college and their careers. Principals are a major driver of school improvement and teacher quality, and second only to teachers in their impact on student achievement.[1] A strong principal can have a positive impact on teachers' instructional practice, and on the learning outcomes of hundreds of students. In school "turnaround" models and instructional programs, a consistently recognized determinant of success is not only the quality of the model or program but the school leader's ability to implement the model or program effectively.

Despite their importance, school leaders are often denied the autonomy, resources, or support they need to implement models and programs and lead their schools effectively. To recruit and retain highly talented school leaders to serve in underperforming schools, district leaders must remove obstacles and give these individuals real flexibility over money, time, operations, and staffing to enable them to lead their schools.[2]

In the past, the SLP has funded projects that have focused on creating alternative pathways for principal certification or licensure and providing professional development to improve the skills of existing principals in schools in high-need LEAs. In this notice, the Secretary encourages applicants to look beyond preparation pathways and to promote district conditions that support these school leaders in leading and turning around the persistently lowest-achieving schools in the participating LEAs. In addition, the Secretary encourages applications for projects that will collect and use data to determine the effect of these school leaders on student learning in the schools in which they serve and for continuous program improvement.

[1] Leithwood, Kenneth *et al.* "How Leadership Influences Student Learning." Wallace Foundation, 2004.

[2] Calkins, Andrew *et al.* "The Turnaround Challenge: Why America's best opportunity to dramatically improve student achievement lies in our worst-performing schools." 2007.

For the purpose of these invitational priorities, the term "persistently lowest-achieving school" is defined as it is under the Department's State Fiscal Stabilization Fund Program (74 FR 58436, 58487), School Improvement Grants (74 FR 65618, 65652), and Race to the Top Fund (74 FR 59836, 59840).

The definition of persistently lowest-achieving school is in this notice under Section III: Eligibility Information (3) Other.

Addressing one or more of these priorities will not give an applicant an advantage over another applicant who does not choose to respond to the invitational priorities.

Program Authority: 20 U.S.C. 6651(b).

Applicable Regulations: The Education Department General Administrative Regulations (EDGAR) in 34 CFR parts 74, 75, 77, 79, 80, 81, 82, 84, 85, 86, 97, 98 and 99.

Note: The regulations in 34 CFR part 79 apply to all applicants except federally recognized Indian tribes.

Note: The regulations in 34 CFR part 86 apply to institutions of higher education only.

II. Award Information

Type of Award: Discretionary grants.

Estimated Available Funds: $11,000,000

Estimated Range of Awards: $250,000–$750,000.

Estimated Average Size of Awards: $500,000.

Estimated Number of Awards: 15–20.

Note: The Department is not bound by any estimates in this notice.

Project Period: Up to 60 months.

III. Eligibility Information

1. *Eligible Applicants:* High-need LEAs; consortia of high-need LEAs; and partnerships of high-need LEAs, non-profit organizations (which may be a community- or faith-based organization), and institutions of higher education. Applicants must identify and confirm in their applications that the participating LEAs meet the definition of high-need LEA in section 2102(3) of the ESEA.

2. *Cost Sharing or Matching:* This program does not require cost sharing or matching.

3. *Other: Definitions of High-Need LEA and Persistently Lowest-Achieving Schools, and Other Eligibility Information.* As defined in section 2102(3) of the ESEA, the term high-need LEA means an LEA—

(a)(1) That serves not fewer than 10,000 children from families with incomes below the poverty line, or (2) for which not less than 20 percent of the children served by the LEA are from families with incomes below the poverty line; and

(b) For which there is (1) a high percentage of teachers not teaching in the academic subjects or grade levels the teachers were trained to teach, or (2) a high percentage of teachers with emergency, provisional, or temporary certification or licensing.

So that the Department may be able to confirm the eligibility of the LEAs that projects propose to serve, applicants are expected to include information in their applications that demonstrates that each participating LEA in the project is a high-need LEA, as defined in section 2102(3) of the ESEA. This information should be based on the most recent available data on the number of children from families with incomes below the poverty line that the LEA serves. When presenting evidence to support that each participating LEA meets the ESEA definition of a high-need LEA, an applicant should consider the following:

The Department is not aware of any reliable data that are available to LEAs—other than the data periodically gathered by the U.S. Census Bureau—that would show that an LEA serves the required number or percentage of children (individuals ages 5 through 17) from families below the poverty line (as defined in section 9101(33) of the ESEA).

Note: The data that many LEAs collect on the number or percentage of children eligible for free- and reduced-priced meal subsidies may not be used to satisfy the requirements under component (a) of the ESEA definition of high-need LEA. Those data do not reflect children from families with incomes below the poverty line, as defined in section 9101(33) of the ESEA.

Therefore, absent a showing of alternative LEA data that reliably show the number of children from families with incomes below the poverty line that are served by the LEA, the eligibility of an LEA as a high-need LEA under component (a) would be determined on the basis of the most recent U.S. Census Bureau data. U.S. Census Bureau data are available for all school districts with geographic boundaries that existed when the U.S. Census Bureau collected its information. The link to the census data is: *http://www.census.gov/hhes/www/saipe/data/index.html*.

The Department also makes these data available at its Web site at: *http://www.ed.gov/programs/lsl/eligibility.html*. (Although the Department posted this listing specifically for the Improving Literacy through School Libraries program, these same data apply to the ESEA definition of a high-need LEA used for purposes of determining eligibility under the SLP.)

With regard to component (b)(1) of the ESEA definition of high-need LEA, the Department interprets the phrase "a high percentage of teachers not teaching in the academic subjects or grade levels that the teachers were trained to teach" as being equivalent to "a high percentage of teachers teaching out of field." The Department expects that LEAs that rely on component (b)(1) of the ESEA definition of high-need LEA will demonstrate that they have a high percentage of teachers teaching out of field. The Department is not aware of any specific data that would demonstrate a "high percentage" of teachers teaching out of field. Accordingly, the Department will review this aspect of an LEA's proposed eligibility on a case-by-case basis. To decrease the level of uncertainty, an applicant might choose instead to demonstrate that each participating LEA meets the eligibility test for a high-need LEA under component (b)(2) of the ESEA definition.

For component (b)(2) of the ESEA definition of high-need LEA, the data that LEAs likely will find most readily available on the percentage of teachers with emergency, provisional, or temporary certification or licensing are the data they provide to their States for inclusion in the reports on the quality of teacher preparation that the States provide to the Department in October of each year as required by section 207 of the Higher Education Act of 1965, as amended (HEA). In these reports, States provide the percentage of teachers in their LEAs teaching on waivers of State certification, both on a statewide basis and in high-poverty LEAs. As reflected in the State reports the Department most recently received in October 2008, the national average percentage of teachers on waivers in high-poverty LEAs is 1.3 percent.

Persistently lowest-achieving school: For the purpose of the invitational priorities in this notice, a persistently lowest-achieving school is, as determined by the State, (1) any Title I school in improvement, corrective action, or restructuring that is (a) among the lowest-achieving five percent of Title I schools in improvement, corrective action, or restructuring or the lowest-achieving five Title I schools in improvement, corrective action, or restructuring in the State, whichever number of schools is greater; or (b) a high school that has had a graduation rate as defined in 34 CFR 200.19(b) that is less than 60 percent over a number of years; and (2) any secondary school that

is eligible for, but does not receive, Title I funds that is (a) among the lowest-achieving five percent of secondary schools or the lowest-achieving five secondary schools in the State that are eligible for, but do not receive, Title I funds, whichever number of schools is greater; or (b) a high school that has had a graduation rate as defined in 34 CFR 200.19(b) that is less than 60 percent over a number of years.

IV. Application and Submission Information

1. *Address to Request Application Package:* ED PUBS, U.S. Department of Education, P.O. Box 22207, Alexandria, VA 22304. Telephone, toll free: 1–877–433–7827. FAX: (703) 605–6794. If you use a telecommunications device for the deaf (TDD), call, toll free: 1–877–576–7734.

You can contact ED Pubs at its Web site, also: *http://www.EDPubs.gov* or at its e-mail address: *edpubs@inet.ed.gov*.

If you request an application package from ED Pubs, be sure to identify this program or competition as follows: CFDA number 84.363A.

Individuals with disabilities can obtain a copy of the application package in an accessible format (e.g., braille, large print, audiotape, or computer diskette) by contacting the person or team listed under *Accessible Format* in section VIII of this notice.

2. *Content and Form of Application Submission:* Requirements concerning the content of an application, together with the forms you must submit, are in the application package for this program. Page Limit: The application narrative is where you, the applicant, address the selection criteria that reviewers use to evaluate and score your application. Applicants are strongly encouraged to limit the application narrative to the equivalent of no more than 50 pages, using the following standards:

- A "page" is 8.5″ x 11″, on one side only, with 1″ margins at the top, bottom, and both sides.
- Double space (no more than three lines per vertical inch) all text in the application narrative, including titles, headings, footnotes, quotations, references, and captions, as well as all text in charts, tables, figures, and graphs.
- Use a font that is either 12 point or larger or no smaller than 10 pitch (characters per inch).
- Use one of the following fonts: Times New Roman, Courier, Courier New, or Arial. An application submitted in any other font (including Times Roman or Arial Narrow) will not be accepted.

The page limit does not apply to the application cover sheet; the budget section, including the narrative budget justification; the assurances and certifications; or the one-page abstract, the resumes, the bibliography, or the letters of support. However, the page limit does apply to all of the application narrative section.

3. *Submission Dates and Times:*

Applications Available: February 9, 2010.

Deadline for Notice of Intent to Apply: March 8, 2010.

Date of Pre-Application Meetings: February 19, 2010.

The Department will hold two pre-application meetings for prospective applicants on February 19, 2010. The first meeting will be held from 9:30 a.m. to 12:30 p.m., and the second meeting (a repeat of the morning meeting) will be held from 2:30 p.m. to 5:30 p.m. at the U.S. Department of Education, Barnard Auditorium, 400 Maryland Avenue, SW., Washington, DC 20202. Interested parties are invited to participate in this meeting to discuss the purpose of the SLP, invitational priorities, selection criteria, application content, submission requirements, and reporting requirements. This site is accessible by Metro on the Blue, Orange, Green, and Yellow lines at the Seventh Street and Maryland Avenue exit of the L'Enfant Plaza station.

Individuals interested in attending this meeting are encouraged to pre-register by e-mailing their name, organization, and contact information with the subject heading "PRE–APPLICATION MEETING" to *Schoolleadershipmatters@ed.gov.* There is no registration fee for attending this meeting. For further information contact Beatriz Ceja, U.S. Department of Education, Office of Innovation and Improvement, room 4W210, 400 Maryland Avenue, SW., Washington, DC 20202. Telephone: (202) 205–5009 or by e-mail: *Schoolleadershipmatters@ed.gov.*

Assistance to Individuals With Disabilities at the Pre-Application Meeting

The meeting site is accessible to individuals with disabilities. If you will need an auxiliary aid or service to participate in the meeting (e.g., interpreting service, assistive listening device, or materials in an alternate format), notify the contact person listed in section VII of this notice at least two weeks before the scheduled meeting date. Although we will attempt to meet a request we receive after that date, we may not be able to make available the requested auxiliary aid or service because of insufficient time to arrange it.

Deadline for Transmittal of Applications: April 6, 2010. Applications for grants under this program must be submitted electronically using the Electronic Grant Application System (e-Application) accessible through the Department's e-Grants site. For information (including dates and times) about how to submit your application electronically, or in paper format by mail or hand delivery if you qualify for an exception to the electronic submission requirement, please refer to section IV.6. *Other Submission Requirements* of this notice.

We do not consider an application that does not comply with the deadline requirements.

Individuals with disabilities who need an accommodation or auxiliary aid in connection with the application process should contact the person listed under **FOR FURTHER INFORMATION CONTACT** in section VII of this notice. If the Department provides an accommodation or auxiliary aid to an individual with a disability in connection with the application process, the individual's application remains subject to all other requirements and limitations in this notice.

Deadline for Intergovernmental Review: June 7, 2010.

4. *Intergovernmental Review:* This program is subject to Executive Order 12372 and the regulations in 34 CFR part 79. Information about Intergovernmental Review of Federal Programs under Executive Order 12372 is in the application package for this program.

5. *Funding Restrictions:* We reference regulations outlining funding restrictions in the *Applicable Regulations* section of this notice.

6. *Other Submission Requirements:* Applications for grants under this program must be submitted electronically unless you qualify for an exception to this requirement in accordance with the instructions in this section.

a. *Electronic Submission of Applications.*

Applications for grants under the SLP—CFDA Number 84.363A must be submitted electronically using e-Application, accessible through the Department's e-Grants Web site at: *http://e-grants.ed.gov.*

We will reject your application if you submit it in paper format unless, as described elsewhere in this section, you qualify for one of the exceptions to the electronic submission requirement *and* submit, no later than two weeks before

the application deadline date, a written statement to the Department that you qualify for one of these exceptions. Further information regarding calculation of the date that is two weeks before the application deadline date is provided later in this section under *Exception to Electronic Submission Requirement.*

While completing your electronic application, you will be entering data online that will be saved into a database. You may not e-mail an electronic copy of a grant application to us.

Please note the following:

• You must complete the electronic submission of your grant application by 4:30:00 p.m., Washington, DC time, on the application deadline date. E-Application will not accept an application for this program after 4:30 p.m., Washington, DC time, on the application deadline date. Therefore, we strongly recommend that you do not wait until the application deadline date to begin the application process.

• The hours of operation of the e-Grants Web site are 6 a.m. Monday until 7 p.m. Wednesday; and 6 a.m. Thursday until 8 p.m. Sunday, Washington, DC time. Please note that, because of maintenance, the system is unavailable between 8 p.m. on Sundays and 6 a.m. on Mondays, and between 7 p.m. on Wednesdays and 6 a.m. on Thursdays, Washington, DC time. Any modifications to these hours are posted on the e-Grants Web site. (**Special Note:** Due to internal database configuration changes, e-application will be closed from February 11–16, 2010; this does not affect the application deadline published in this notice.)

• You will not receive additional point value because you submit your application in electronic format, nor will we penalize you if you qualify for an exception to the electronic submission requirement, as described elsewhere in this section, and submit your application in paper format.

• You must submit all documents electronically, including all information you typically provide on the following forms: the Application for Federal Assistance (SF 424), the Department of Education Supplemental Information for SF 424, Budget Information—Non-Construction Programs (ED 524), and all necessary assurances and certifications. You must attach any narrative sections of your application as files in a .DOC (document), .RTF (rich text), or .PDF (Portable Document) format. If you upload a file type other than the three file types specified in this paragraph or submit a password protected file, we will not review that material.

• Your electronic application must comply with any page limit requirements described in this notice.

• Prior to submitting your electronic application, you may wish to print a copy of it for your records.

• After you electronically submit your application, you will receive an automatic acknowledgment that will include a PR/Award number (an identifying number unique to your application).

• Within three working days after submitting your electronic application, fax a signed copy of the SF 424 to the Application Control Center after following these steps:

(1) Print SF 424 from e-Application.

(2) The applicant's Authorizing Representative must sign this form.

(3) Place the PR/Award number in the upper right hand corner of the hard-copy signature page of the SF 424.

(4) Fax the signed SF 424 to the Application Control Center at (202) 245–6272.

• We may request that you provide us original signatures on other forms at a later date.

Application Deadline Date Extension in Case of E-Application Unavailability: If you are prevented from electronically submitting your application on the application deadline date because e-Application is unavailable, we will grant you an extension of one business day to enable you to transmit your application electronically, by mail, or by hand delivery. We will grant this extension if—

(1) You are a registered user of e-Application and you have initiated an electronic application for this competition; and

(2) (a) E-Application is unavailable for 60 minutes or more between the hours of 8:30 a.m. and 3:30 p.m., Washington, DC time, on the application deadline date; or

(b) E-Application is unavailable for any period of time between 3:30 p.m. and 4:30:00 p.m., Washington, DC time, on the application deadline date.

We must acknowledge and confirm these periods of unavailability before granting you an extension. To request this extension or to confirm our acknowledgment of any system unavailability, you may contact either (1) the person listed elsewhere in this notice under **FOR FURTHER INFORMATION CONTACT** (see VII. Agency Contact) or (2) the e-Grants help desk at 1–888–336–8930. If e-Application is unavailable due to technical problems with the system and, therefore, the application deadline is extended, an e-mail will be sent to all registered users who have initiated an e-Application. Extensions referred to in this section apply only to the unavailability of e-Application.

Exception to Electronic Submission Requirement: You qualify for an exception to the electronic submission requirement, and may submit your application in paper format, if you are unable to submit an application through e-Application because—

• You do not have access to the Internet; or

• You do not have the capacity to upload large documents to e-Application; and

• No later than two weeks before the application deadline date (14 calendar days or, if the fourteenth calendar day before the application deadline date falls on a Federal holiday, the next business day following the Federal holiday), you mail or fax a written statement to the Department, explaining which of the two grounds for an exception prevents you from using the Internet to submit your application. If you mail your written statement to the Department, it must be postmarked no later than two weeks before the application deadline date. If you fax your written statement to the Department, we must receive the faxed statement no later than two weeks before the application deadline date.

Address and mail or fax your statement to: Beatriz Ceja, U.S. Department of Education, 400 Maryland Avenue, SW., Room 4W210, Washington, DC 20202. FAX: (202) 401–8466.

Your paper application must be submitted in accordance with the mail or hand delivery instructions described in this notice.

b. *Submission of Paper Applications by Mail.*

If you qualify for an exception to the electronic submission requirement, you may mail (through the U.S. Postal Service or a commercial carrier) your application to the Department. You must mail the original and two copies of your application, on or before the application deadline date, to the Department at the following address: U.S. Department of Education, Application Control Center, Attention: (CFDA Number 84.363A), LBJ Business Level 1, 400 Maryland Avenue, SW., Washington, DC 20202–4260.

You must show proof of mailing consisting of one of the following:

(1) A legibly dated U.S. Postal Service postmark.

(2) A legible mail receipt with the date of mailing stamped by the U.S. Postal Service.

(3) A dated shipping label, invoice, or receipt from a commercial carrier.

(4) Any other proof of mailing acceptable to the Secretary of the U.S. Department of Education.

If you mail your application through the U.S. Postal Service, we do not accept either of the following as proof of mailing:

(1) A private metered postmark.

(2) A mail receipt that is not dated by the U.S. Postal Service.

If your application is postmarked after the application deadline date, we will not consider your application.

Note: The U.S. Postal Service does not uniformly provide a dated postmark. Before relying on this method, you should check with your local post office.

c. *Submission of Paper Applications by Hand Delivery.*

If you qualify for an exception to the electronic submission requirement, you (or a courier service) may deliver your paper application to the Department by hand. You must deliver the original and two copies of your application, by hand, on or before the application deadline date, to the Department at the following address: U.S. Department of Education, Application Control Center, Attention: (CFDA Number 84.363A), 550 12th Street, SW., Room 7041, Potomac Center Plaza, Washington, DC 20202–4260.

The Application Control Center accepts hand deliveries daily between 8:00 a.m. and 4:30:00 p.m., Washington, DC time, except Saturdays, Sundays, and Federal holidays.

Note for Mail or Hand Delivery of Paper Applications: If you mail or hand deliver your application to the Department—

(1) You must indicate on the envelope and—if not provided by the Department—in Item 11 of the SF 424 the CFDA number, including suffix letter, if any, of the competition under which you are submitting your application; and

(2) The Application Control Center will mail to you a notification of receipt of your grant application. If you do not receive this grant notification within 15 business days from the application deadline date, you should call the U.S. Department of Education Application Control Center at (202) 245–6288.

V. Application Review Information

1. *Selection Criteria:* The selection criteria for this program are from 34 CFR 75.210. The maximum score for all of the selection criteria is 100 points. The maximum score for each criterion is indicated in parentheses. Each criterion also includes the factors that the reviewers will consider in determining how well an application meets the criterion. Any notes following a selection criterion are intended to provide guidance to help applicants in preparing their applications only, and are not statutory or regulatory requirements for this competition. The criteria are as follows:

A. *Quality of the project design* (45 points). The Secretary considers the quality of the design of the proposed project. In determining the quality of the design of the proposed project, the Secretary considers the following factors:

1. The extent to which there is a conceptual framework underlying the proposed research or demonstration activities and the quality of that framework.

2. The extent to which the proposed activities constitute a coherent, sustained program of training in the field.

3. The extent to which the proposed project is part of a comprehensive effort to improve teaching and learning and support rigorous academic standards for students.

4. The extent to which the design for implementing and evaluating the proposed project will result in information to guide possible replication of project activities or strategies, including information about the effectiveness of the approach or strategies employed by the project.

5. The extent to which project participants are to be selected on the basis of academic excellence.

Note: The Secretary encourages applicants to address this criterion by discussing the overall project framework. The applicant is encouraged to identify its proposed partner or partners; its capacity to prepare leaders for schools in high-need LEAs; criteria for selecting and assessing program participants; and implementation strategies including the processes, tools, and protocols to be used in selecting, preparing, assessing, and supporting leaders to significantly improve schools in high-need LEAs. The Secretary also encourages applicants to describe their proposed program delivery strategies, such as (1) Plans for participants to have school-based work experiences or serve as residents with experienced, highly effective school leaders, (2) plans for participants to receive intensive induction support, including mentoring and coaching, and (3) placement and retention strategies that include follow-up support.

B. *Quality of the project evaluation* (25 points). The Secretary considers the quality of the evaluation to be conducted of the proposed project. In determining the quality of the evaluation, the Secretary considers the following factors:

1. The extent to which the methods of evaluation include the use of objective performance measures that are clearly related to the intended outcomes of the project and will produce quantitative and qualitative data to the extent possible.

2. The extent to which the methods of evaluation will provide performance feedback and permit periodic assessment of progress toward achieving intended outcomes.

Note: The Secretary encourages applicants to consider how this criterion may affect both their annual performance reports and the final evaluation submitted under 34 CFR 75.590. In addition, the Secretary encourages applicants to address this criterion by including proposed benchmarks for assessing both short- and long-term progress toward the specific project objectives and outcome measures they would use to assess the project's impact on teaching and learning or other important outcomes for project participants. Applicants may consider the use of "logic models" to identify the project's inputs, outputs, and outcomes.

Questions to consider when responding to the evaluation criterion might include:

- What types of data will be collected?
- When will the data be collected?
- What evaluation instruments will be developed and when?
- How will the data be analyzed?
- How will the applicant use the data to monitor progress of the funded project and to provide accountability information both about the success at the initial site or sites and about effective strategies for replication in other settings?

C. *Significance* (20 points). The Secretary considers the significance of the proposed project. In determining the significance of the proposed project, the Secretary considers the following factors:

1. The potential contribution of the proposed project to increased knowledge or understanding of educational problems, issues, or effective strategies.

2. The likelihood that the proposed project will result in system change or improvement.

3. The importance or magnitude of the results or outcomes likely to be attained by the proposed project, especially improvements in teaching and student achievement.

Note: Applicants are encouraged to describe how the proposed project will affect teaching and student learning in the proposed service area, and, in particular, how it will enable the LEA to meet its need for principals who have the skills and competencies necessary to significantly improve schools in high-need LEAs.

D. *Quality of the management plan* (10 points). The Secretary considers the quality of the management plan for the proposed project. In determining the quality of the management plan for the proposed project, the Secretary considers the following factors:

1. The adequacy of the management plan to achieve the objectives of the proposed project on time and within budget, including clearly defined responsibilities, timelines, and milestones for accomplishing project tasks.

2. How the applicant will ensure that a diversity of perspectives are brought to bear in the operation of the proposed project, including those of parents, teachers, the business community, a variety of disciplinary and professional fields, recipients or beneficiaries of services, or others, as appropriate.

3. The adequacy of procedures for ensuring feedback and continuous improvement in the operation of the proposed project.

Note: The Secretary encourages applicants to address this criterion by providing such information as:

- The title, responsibilities, and time commitment of each key individual helping implement the project's goals and objectives.
- A year-to-year timeline for undertaking important project activities, with benchmarks for determining whether the project is achieving its stated goals and objectives.
- The strategies for monitoring whether or not the project is meeting its goals and objectives, and for making mid-course corrections, as appropriate.
- The strategies for including the identified partners and other stakeholders in meeting the project's goals and objectives.
- Evidence of committed engagement by identified partners.

2. *Applicant's Past Performance and Compliance History:* In accordance with 34 CFR 75.217(d)(3)(ii), the Secretary may consider an applicant's past performance and compliance history when evaluating applications and in making funding decisions.

VI. Award Administration Information

1. *Award Notices:* If your application is successful, we notify your U.S. Representative and U.S. Senators and send you a Grant Award Notification (GAN). We may notify you informally, also.

If your application is not evaluated or not selected for funding, we notify you.

2. *Administrative and National Policy Requirements:* We identify administrative and national policy requirements in the application package and reference these and other requirements in the *Applicable Regulations* section of this notice.

We reference the regulations outlining the terms and conditions of an award in the *Applicable Regulations* section of this notice and include these and other specific conditions in the GAN. The GAN also incorporates your approved application as part of your binding commitments under the grant.

3. *Reporting:* At the end of your project period, you must submit a final performance report, including financial information, as directed by the Secretary. If you receive a multi-year award, you must submit an annual performance report that provides the most current performance and financial expenditure information as directed by the Secretary under 34 CFR 75.118. The Secretary may also require more frequent performance reports under 34 CFR 75.720(c). For specific requirements on reporting, please go to *http://www.ed.gov/fund/grant/apply/appforms/appforms.html.*

4. *Performance Measures:* The Secretary has established two performance measures for assessing the effectiveness of the SLP: (1) the percentage of participants who become certified principals including assistant principals who are then placed and retained in schools in high-need LEAs, and (2) the percentage of principals including assistant principals who participate in professional activities, show an increase in their pre-post scores on a standardized measure of principal skills, and are retained in their positions in schools in high-need LEAs for at least two years. Grantees will be expected to provide data on each component of the two measures.

VII. Agency Contacts

FOR FURTHER INFORMATION CONTACT: Beatriz Ceja, U.S. Department of Education, 400 Maryland Avenue, SW., room 4W210, Washington, DC 20202–5960. Telephone: (202) 205–5009 or by e-mail: *Schoolleadershipmatters@ed.gov.*

If you use a TDD, call the FRS, toll free, at 1–800–877–8339.

VIII. Other Information

Accessible Format: Individuals with disabilities can obtain this document and a copy of the application package in an accessible format (e.g., braille, large print, audiotape, or computer diskette) on request to the program contact person listed under **FOR FURTHER INFORMATION CONTACT** in section VII of this notice.

Electronic Access to This Document: You can view this document, as well as all other documents of this Department published in the **Federal Register,** in text or Adobe Portable Document Format (PDF) on the Internet at the following site: *http://www.ed.gov/news/fedregister.* To use PDF you must have Adobe Acrobat Reader, which is available free at this site.

Note: The official version of this document is the document published in the **Federal Register**. Free Internet access to the official edition of the **Federal Register** and the Code of Federal Regulations is available on GPO Access at: *http://www.gpoaccess.gov/nara/index.html.*

Dated: February 2, 2010.

James H. Shelton, III,

Assistant Deputy Secretary for Innovation and Improvement.

[FR Doc. 2010–2561 Filed 2–4–10; 8:45 am]

BILLING CODE 4000–01–P

DEPARTMENT OF EDUCATION

National Assessment of Educational Progress (NAEP) in Reading

AGENCY: U.S. Department of Education, National Assessment Governing Board.

ACTION: Notice of opportunity for public comment for evaluating and finalizing achievement levels definitions for the National Assessment of Educational Progress (NAEP) in Reading.

SUMMARY: The National Assessment Governing Board is soliciting public comment and recommendations for improvements to the achievement levels definitions for the National Assessment of Educational Progress (NAEP) in reading. These achievement levels definitions describe the reading skills and abilities that students *should* demonstrate at each achievement level.

Public and private parties and organizations are invited to provide written comments and recommendations. Voluntary participation by all interested parties is urged. This notice sets forth the review schedule, identifies the kind of information that the Governing Board is required to verify regarding achievement levels, and provides information for accessing additional materials that will be useful for this review. This document is intended to notify members of the general public of their opportunity to provide comment.

Background

Under Public Law 107–279, the National Assessment Governing Board (NAGB) is authorized to formulate policy guidelines for NAEP. The legislation specifies that the Governing Board is to develop appropriate student achievement levels for each subject and grade tested, as provided in section 303(e). Such levels are determined by identifying the knowledge that can be measured and verified objectively using widely accepted professional assessment standards; and developing achievement levels that are consistent with relevant widely accepted professional assessment standards and

based on the appropriate level of subject matter knowledge for grade levels to be assessed, or the age of the students, as the case may be.

In preparation for reporting the results of the new assessment of reading at grades 4, 8, and 12, the Governing Board convened panels of reading content experts to participate in a study for producing draft achievement levels descriptions. The Governing Board seeks comment on the draft achievement levels descriptions and recommendations for improvements. All responses will be taken into consideration before finalizing the definitions for Board adoption. Once adopted, these descriptions will be used in reporting performance on NAEP relative to the achievement levels in 2009 and for all subsequent assessments until a new framework is developed for the reading NAEP.

Review Materials for Comment and Review

Materials for this review are located at *http://www.nagb.org/newsroom/release/release-012710.htm.*

(1) *Policy Definitions:* The Governing Board adopted *policy definitions* of student performance that identify in very general terms what is meant by Basic, Proficient, and Advanced achievement levels. These policy definitions apply for any subject and grade assessed in NAEP, and they are used for developing the achievement levels descriptions to be used in reporting NAEP results in a specific subject and grade—such as for the 2009 reading NAEP at grades 4, 8, and 12. The policy definitions are posted on the web site for this review.

(2) *Draft Achievement Level Descriptions for Reading:* The *draft achievement levels descriptions* for reading at the Basic, Proficient, and Advanced levels for grades 4, 8, and 12. The achievement levels descriptions (ALDs) were written to describe how students *should* be able to perform on the reading NAEP assessment in order to demonstrate achievement that the Governing Board has defined as Basic, Proficient, and Advanced for NAEP.

(3) *Reading Framework:* In addition to the policy definitions of Basic, Proficient, and Advanced achievement, the achievement levels descriptions must represent the *framework* used for developing the reading NAEP. Please see chapter 2 of the *Reading Framework for the 2009 National Assessment of Educational Progress* for more information about the NAEP reading assessment and details regarding the cognitive targets assessed.

(4) *Focus Questions:* Finally, some of the *aspects of the achievement levels descriptions* that the Governing Board must address are included. All comments will be appreciated, and your comments on and recommendations regarding these aspects will be especially appreciated.

The Board is seeking comment from policymakers, teachers, researchers, state and local reading specialists, members of professional reading and teacher organizations, and members of the public.

It is anticipated that the finalized achievement levels descriptions will be presented for approval at the Governing Board meeting on March 4–6, 2010.

Timelines

Comments must be received by February 10, 2010 and sent to:

National Assessment Governing Board, 800 North Capitol Street, NW., Suite 825, Washington, DC 20002, Attention: Susan Loomis: Public Comment, FAX: (202) 357–6945, E-mail: *Susan.Loomis@ed.gov.*

FOR FURTHER INFORMATION CONTACT: Susan Loomis, National Assessment Governing Board, 800 North Capitol Street, NW., Suite 825, Washington, DC 20002–4233, Telephone: (202) 357–6940.

SUPPLEMENTARY INFORMATION:

Specific questions that the Board seeks responses to include the following:

1. How well do the reading achievement levels descriptions (ALDs) for each grade and level represent the policy definitions *overall*? You may want to address each grade level separately.

2. Does the progression *within each grade* from Basic to Proficient to Advanced in the reading skills that students should demonstrate seem reasonable?

3. Does the progression across the three grade levels of reading skills required for performance *within each achievement level* (Basic/Proficient/Advanced) seem reasonable?

4. Is the relative emphasis of the cognitive targets in the achievement levels descriptions appropriate for each achievement level and grade?

5. Finally, are the achievement definitions useful, i.e., do they convey an understanding of what students should be able to do in reading at the different grade levels?

Your comments and recommendations for improving the achievement levels descriptions will be appreciated.

Electronic Access to This Document: You may view this document, as well as all other documents of this Department published in the **Federal Register,** in text or Adobe Portable Document Format (PDF) on the Internet at the following site: *http://www.ed.gov/news/fedregister/index.html.* To use PDF you must have Adobe Acrobat Reader, which is available free at this site. If you have questions about using PDF, call the U.S. Government Printing Office (GPO), toll free at 1–888–293–6498; or in the Washington, DC, area at (202) 512–1530.

Note: The official version of this document is the document published in the **Federal Register.** Free Internet access to the official edition of the **Federal Register** and the Code of Federal Regulations is available on GPO Access at: *http://www.gpoaccess.gov/nara/index.html.*

Dated: February 2, 2010.

Mary Crovo,

Deputy Executive Director, National Assessment Governing Board, U.S. Department of Education.

[FR Doc. 2010–2550 Filed 2–4–10; 8:45 am]

BILLING CODE 4000–01–P

DEPARTMENT OF ENERGY

[Case No. CAC–022]

Energy Conservation Program for Consumer Products: Decision and Order Granting a Waiver to Hallowell International (Hallowell) From the Department of Energy Residential Central Air Conditioner and Heat Pump Test Procedures

AGENCY: Office of Energy Efficiency and Renewable Energy, Department of Energy.

ACTION: Decision and order.

SUMMARY: This notice publishes the U.S. Department of Energy's (DOE) decision and order in Case No. CAC–022. DOE grants a waiver to Hallowell from the existing DOE test procedure applicable to residential central air conditioners and heat pumps. The waiver pertains to Hallowell's boosted compression heat pumps, a product line that uses three-stage technology to enable efficient heating at very low outdoor temperatures. The existing test procedure accounts for two-capacity operation, but not three-capacity operation. Therefore, Hallowell has suggested an alternate test procedure to calculate the heating performance of its three-stage boosted compression products. As a condition of this waiver, Hallowell must test and rate its boosted compression heat pump products according to the alternate test procedure set forth in this notice.

DATES: This decision and order is effective February 5, 2010.

FOR FURTHER INFORMATION CONTACT: Dr. Michael G. Raymond, U.S. Department of Energy, Building Technologies Program, Mailstop EE–2J, 1000 Independence Avenue, SW., Washington, DC 20585–0121. Telephone: (202) 586–9611. E-mail: *AS_Waiver_Requests@ee.doe.gov.*

Francine Pinto, U.S. Department of Energy, Office of the General Counsel, Mail Stop GC–71, 1000 Independence Avenue, SW., Washington, DC 20585–0103. Telephone: (202) 586–7432. E-mail: *Francine.Pinto@hq.doe.gov.*

SUPPLEMENTARY INFORMATION: In accordance with Title 10 of the Code of Federal Regulations (10 CFR) 430.27(l), DOE gives notice of the issuance of its decision and order as set forth below. In this decision and order, DOE grants Hallowell a waiver from the applicable residential central air conditioner and heat pump test procedures at 10 CFR part 430 subpart B, appendix M, for certain basic models of its three-stage boosted compression heat pumps, provided that Hallowell tests and rates such products using the alternate test procedure described in this notice. Further, today's decision requires that Hallowell may not make any representations concerning the energy efficiency of these products unless such product has been tested consistent with the provisions and restrictions in the alternate test procedure set forth in the decision and order below, and such representations fairly disclose the results of such testing. (42 U.S.C. 6314(d)) Distributors, retailers, and private labelers are held to the same standard when making representations regarding the energy efficiency of these products. (42 U.S.C. 6293(c)).

Issued in Washington, DC, on January 29, 2010.

Cathy Zoi,

Assistant Secretary, Energy Efficiency and Renewable Energy.

Decision and Order

In the Matter of: Hallowell International (Hallowell) (Case No. CAC–022).

Background

Title III of the Energy Policy and Conservation Act sets forth a variety of provisions concerning energy efficiency. Part A of Title III provides for the "Energy Conservation Program for Consumer Products Other Than Automobiles." (42 U.S.C. 6291–6309) Part A includes definitions, test procedures, labeling provisions, energy conservation standards, and the authority to require information and reports from manufacturers. Further, Part A authorizes the Secretary of Energy to prescribe test procedures that are reasonably designed to produce results that measure energy efficiency, energy use, or estimated annual operating costs, and that are not unduly burdensome to conduct. (42 U.S.C. 6293(b)(3)).

Today's notice involves residential products under Part A. Relevant to the current petition for waiver, the test procedure for residential central air conditioners and heat pumps is contained in 10 CFR part 430, subpart B, appendix M.

DOE's regulations allow a person to seek a waiver from the test procedure requirements for covered consumer products, when the petitioner's basic model contains one or more design characteristics that prevent testing according to the prescribed test procedure, or when they may evaluate the basic model in a manner so unrepresentative of its true energy consumption characteristics as to provide materially inaccurate comparative data. 10 CFR 430.27(a)(1). Petitioners must include in their petition any alternate test procedures known to the petitioner to evaluate the basic model in a manner representative of its energy consumption characteristics. 10 CFR 430.27(b)(1)(iii). The Assistant Secretary for Energy Efficiency and Renewable Energy (the Assistant Secretary) may grant a waiver subject to conditions, including adherence to alternate test procedures. 10 CFR 430.27(l). Waivers remain in effect pursuant to the provisions of 10 CFR 430.27(m).

The waiver process also allows any interested person who has submitted a petition for waiver to file an application for interim waiver of the applicable test procedure requirements. 10 CFR 430.27(a)(2). The Assistant Secretary will grant an interim waiver request if it is determined that the applicant will experience economic hardship if the interim waiver is denied, if it appears likely that the petition for waiver will be granted, and/or the Assistant Secretary determines that it would be desirable for public policy reasons to grant immediate relief pending a determination on the petition for waiver. 10 CFR 430.27(g).

On July 29, 2008, Hallowell filed a petition for waiver and an application for interim waiver from the test procedures applicable to residential central air conditioners and heat pumps, found at 10 CFR part 430, subpart B, appendix M. Hallowell requested the waiver for its residential boosted compression products that use three-speed compressor technology, stating that the existing test procedure is applicable only to products with one- and two-speed compressors. Hallowell included an alternate test procedure in its July 29, 2008, submittal, but DOE advised Hallowell that the alternate procedure was incomplete. On April 25, 2009, Hallowell submitted a revised petition and alternate test procedure. On May 29, 2009, Hallowell submitted a revised petition with additional evidence of financial hardship. On December 2, 2009, DOE granted Hallowell an interim waiver and published Hallowell's petition for waiver. 74 FR 63131. DOE received no comments on the Hallowell petition.

Assertions and Determinations

Hallowell's Petition for Waiver

Hallowell seeks a waiver from the DOE test procedures because its boosted compression heat pump systems contain design characteristics that prevent testing according to the current DOE test procedure. The DOE test procedure covers systems with a single speed, with two steps or stages of modulation, and with continuous modulation over a finite range through the incorporation of a variable-speed or digital compressor. Hallowell's product deviates from the anticipated form—a system whose performance falls between that of a two-capacity system and a conventional variable-capacity system—because the three-capacity capability is limited to heating mode operation. Moreover, the additional stage of heating capacity is used specifically at the lowest outdoor temperatures to maximize the total heating contributed by the heat pump, relative to the total heating supplied by the auxiliary heat source (usually electric resistance). Another unique feature of Hallowell's low-temperature heat pump system is that for any given outdoor temperature, only two stages of heating are permitted; one stage is always locked out. Hallowell's three-speed boosted compression heat pumps are also capable of efficient operation at much lower temperatures than two-speed heat pumps (Hallowell measured a coefficient of performance of 2.1 at −15 °F), making them potentially very desirable for heating in cold climates.

Rating Hallowell's boosted compression products requires modified calculation algorithms and testing at an additional, lower temperature to capture the effect on both capacity and power of the additional stage/level of heating operation. The building load assigned within the heating seasonal performance factor (HSPF) calculation requires

evaluation based on the case where the high-stage compressor capacity for heating exceeds the high-stage compressor capacity for cooling. Finally, the test procedure must account for the control feature that limits the number of heating mode capacity levels to two for any given outdoor temperature. The Hallowell alternate test procedure is a logical extension of DOE's two-capacity test method to cover Hallowell's three-capacity compressor. The two (of three potential) active stages of heating capacity available for each bin temperature calculation are based on Hallowell's control logic. The HSPF algorithm follows the algorithm in the DOE test procedure used for two-capacity heat pumps.

In the DOE test procedure, heating mode tests are conducted at 62°F, 47°F, 35°F, and 17°F. This method does not collect enough operating characteristics to create an accurate trend, and does not consider the performance of 3-speed equipment at cold temperatures, so an additional test point at 0°F is added. The DOE test procedure also linearly interpolates to capture the effect of varying outdoor temperature. The Hallowell product uses a different system configuration for the high compressor capacity tests at 47°F and 17°F; therefore the algorithm used to calculate HSPF was modified to create a more accurate performance map.

DOE notes that the existing DOE test procedure accurately covers the 2 speed air conditioning performance of the Hallowell product because the Booster Compressor is not allowed to operate in cooling mode, effectively making the system a standard two speed air conditioner. Therefore, the waiver is applicable only to heating mode.

Consultations With Other Agencies

DOE consulted with the Federal Trade Commission (FTC) staff concerning the Hallowell Petition for Waiver. The FTC staff did not have any objections to the issuance of a waiver to Hallowell.

Conclusion

After careful consideration of all the materials submitted by Hallowell, the absence of any comments, and consultation with the FTC staff, it is ordered that:

(1) The "Petition for Waiver" filed by Hallowell International (Hallowell) (Case No. CAC–022) is hereby granted as set forth in the paragraphs below.

(2) Hallowell shall not be required to test or rate the following boosted compression models on the basis of the current test procedures contained in 10 CFR part 430, subpart B, appendix M, but shall be required to test and rate such products according to the alternate test procedure as set forth in paragraph (3) below:

ACADIA024, ACADIA036, ACADIA048, 36C35H, 42C46H, ACHP03642, ACHP02431

(3) Alternate Test Procedure

Add section 3.6.6 to address the heating mode tests conducted on units having a triple-capacity compressor.

3.6.6 Tests for a heat pump having a triple-capacity compressor. Test triple-capacity, northern heat pumps for the heating mode as follows:

a. Conduct one Maximum Temperature Test ($H0_1$), two High Temperature Tests ($H1_2$ and $H1_1$), two Frost Accumulation Tests ($H2_2$ and $H2_1$), three Low Temperature Tests ($H3_1$, $H3_2$, and $H3_3$), and one Minimum Temperature Test ($H4_3$). An alternative to conducting the $H2_1$ Frost Accumulation Test to determine $\dot{Q}_h^{k=1}$ (35) and $\dot{E}_h^{k=3}$ (35) is to use the following equations to approximate this capacity and electrical power:

$$\dot{Q}_h^{k=1}(35) = 0.90 \cdot \left\{\dot{Q}_h^{k=1}(17) + 0.6 \cdot \left[\dot{Q}_h^{k=1}(47) - \dot{Q}_h^{k=1}(17)\right]\right\}$$

$$\dot{E}_h^{k=1}(35) = 0.985 \cdot \left\{\dot{E}_h^{k=1}(17) + 0.6 \cdot \left[\dot{E}_h^{k=1}(47) - \dot{E}_h^{k=1}(17)\right]\right\}$$

In evaluating the above equations, determine the quantities $\dot{Q}_h^{k=1}$ (47) and $\dot{E}_h^{k=1}$ (47) from the $H1_1$ Test and evaluate them according to Section 3.7. Determine the quantities $\dot{Q}_h^{k=1}$ (17) and $\dot{E}_h^{k=1}$ (17) from the $H3_1$ Test and evaluate them according to Section 3.10. If the manufacturer conducts the $H2_1$ Test, the option of using the above default equations is not forfeited. Use the paired values of $\dot{Q}_h^{k=1}$ (35) and $\dot{E}_h^{k=1}$ (35) derived from conducting the $H2_1$ Frost Accumulation Test and evaluated as specified in section 3.9.1 or use the paired values calculated using the above default equations, whichever paired values contribute to a higher Region IV HSPF based on the DHR_{min}.

Conducting a Frost Accumulation Test ($H2_3$) with the heat pump operating at its booster capacity is optional. If this optional test is not conducted, determine $\dot{Q}_h^{k=3}$ (35) and $\dot{E}_h^{k=3}$ (35) using the following equations to approximate this capacity and electrical power:

$$\dot{Q}_h^{k=3}(35) = QR_h^{k=2}(35) \cdot \left\{\dot{Q}_h^{k=3}(17) + 1.20 \cdot \left[\dot{Q}_h^{k=3}(17) - \dot{Q}_h^{k=3}(2)\right]\right\}$$

$$\dot{E}_h^{k=3}(35) = PR_h^{k=2}(35) \cdot \left\{\dot{E}_h^{k=3}(17) + 1.20 \cdot \left[\dot{E}_h^{k=3}(17) - \dot{E}_h^{k=3}(2)\right]\right\}$$

Where,

$$QR_h^{k=2}(35) = \frac{\dot{Q}_h^{k=2}(35)}{\dot{Q}_h^{k=2}(17) + 0.6 \cdot \left[\dot{Q}_h^{k=2}(47) - \dot{Q}_h^{k=2}(17)\right]}$$

$$PR_h^{k=2}(35) = \frac{\dot{E}_h^{k=2}(35)}{\dot{E}_h^{k=2}(17) + 0.6 \cdot \left[\dot{E}_h^{k=2}(47) - \dot{E}_h^{k=2}(17)\right]}$$

Determine the quantities $\dot{Q}_h^{k=2}$ (47) and $\dot{E}_h^{k=2}$ (47)from the $H1_2$ Test and evaluate them according to Section 3.7. Determine the quantities $\dot{Q}_h^{k=2}$ (35) and $\dot{E}_h^{k=2}$ (35) from the $H2_2$ Test and evaluate them according to Section 3.9.1. Determine the quantities $\dot{Q}_h^{k=2}$ (17) and $\dot{E}_h^{k=2}$ (17) from the $H3_2$ Test, determine the quantities $\dot{Q}_h^{k=3}$ (17) and $\dot{E}_h^{k=3}$ (17) from the $H3_3$ Test, and determine the quantities $\dot{Q}_h^{k=3}$ (2) and $\dot{E}_h^{k=3}$ (2) from the $H4_3$ Test. Evaluate all six quantities according to Section 3.10. If the manufacturer conducts the $H2_3$ Test, the option of using the above default equations is not forfeited. Use the paired values of $\dot{Q}_h^{k=3}$ (35) and $\dot{E}_h^{k=3}$ (35) derived from conducting the $H2_3$ Frost Accumulation Test and calculated as specified in section 3.9.1 or use the paired values calculated using the above default equations, whichever paired values contribute to a higher Region IV HSPF based on the DHR_{min}.

Table A specifies test conditions for all thirteen tests.

TABLE A—HEATING MODE TEST CONDITIONS FOR UNITS HAVING A TRIPLE-CAPACITY COMPRESSOR

Test description	Air entering indoor unit temperature (°F)		Air entering outdoor unit temperature (°F)		Compressor capacity	Booster	Heating air volume rate
	Dry bulb	Wet bulb	Dry bulb	Wet bulb			
$H0_1$ Test (required, steady)	70	60(max)	62	56.5	Low	Off	Heating Minimum.[1]
$H1_2$ Test (required, steady)	70	60(max)	47	43	High	Off	Heating Full-Load.[2]
$H1C_2$ Test (optional, cyclic)	70	60(max)	47	43	High	Off	([3]).
$H1_1$ Test (required)	70	60(max)	47	43	Low	Off	Heating Minimum.[1]
$H1C_1$ Test (optional, cyclic)	70	60(max)	47	43	Low	Off	([4]).
$H2_3$ Test (optional, steady)	70	60(max)	35	33	High	On	Heating Full-Load.[2]
$H2_2$ Test (required)	70	60(max)	35	33	High	Off	Heating Full-Load.[2]
$H2_1$ Test[5 6] (required)	70	60(max)	35	33	Low	Off	Heating Minimum.[1]
$H3_2$ Test (required, steady)	70	60(max)	17	15	High	On	Heating Full-Load.[2]
$H3C_3$ Test (optional, cyclic)	70	60(max)	17	15	High	On	([7]).
$H3_2$ Test (required, steady)	70	60(max)	17	15	High	Off	Heating Full-Load.[2]
$H3_1$ Test[5] (required, steady)	70	60(max)	17	15	Low	Off	Heating Minimum.[1]
$H4_3$ Test (required, steady)	70	60(max)	0	−2	High	On	Heating Full-Load.[2]

[1] Defined in section 3.1.4.5.
[2] Defined in section 3.1.4.4.
[3] Maintain the airflow nozzle(s) static pressure difference or velocity pressure during the ON period at the same pressure or velocity as measured during the $H1_2$ Test.
[4] Maintain the airflow nozzle(s) static pressure difference or velocity pressure during the ON period at the same pressure or velocity as measured during the $H1_1$ Test.
[5] Required only if the heat pump's performance when operating at low compressor capacity and outdoor temperatures less than 37 °F is needed to complete the section 4.2.6 HSPF calculations.
[6] If table note #5 applies, the section 3.6.3 equations for $\dot{Q}_h^{k=1}$ (35) and $\dot{E}_h^{k=1}$ (17) may be used in lieu of conducting the $H2_1$ Test.
[7] Maintain the airflow nozzle(s) static pressure difference or velocity pressure during the ON period at the same pressure or velocity measured during the $H3_3$ Test.

Section 4.2.3 of appendix M shall be revised to read as follows:

4.2.3. Additional steps for calculating the HSPF of a heat pump having a triple-capacity compressor. * * *

a. Evaluate the space heating capacity and electrical power consumption of the heat pump at outdoor temperature T_j and with a first stage call from the thermostat (k=1), and with a second stage call from the thermostat (k=2) using:

BILLING CODE 6450–01–P

$$\dot{Q}_h^{k=1}(T_j) = \begin{cases} \dot{Q}_h^{k=1}(47) + \dfrac{[\dot{Q}_h^{k=1}(62) - \dot{Q}_h^{k=1}(47)] \cdot (T_j - 47)}{62 - 47}, & \text{if } T_j > 41°F \\ \dot{Q}_h^{k=1}(17) + \dfrac{[\dot{Q}_h^{k=1}(35) - \dot{Q}_h^{k=1}(17)] \cdot (T_j - 17)}{35 - 17}, & \text{if } 15°F < T_j \leq 41°F \\ \dot{Q}_h^{k=2}(0) + \dfrac{[\dot{Q}_h^{k=2}(17) - \dot{Q}_h^{k=2}(0)] \cdot (T_j - 0)}{17 - 0}, & \text{if } -30°F < T_j \leq 15°F \end{cases}$$

$$\dot{Q}_h^{k=2}(T_j) = \begin{cases} \dot{Q}_h^{k=1}(47) + \dfrac{[\dot{Q}_h^{k=1}(62) - \dot{Q}_h^{k=1}(47)] \cdot (T_j - 47)}{62 - 47}, & \text{if } T_j > 62°F \\ \dot{Q}_h^{k=1}(17) + \dfrac{[\dot{Q}_h^{k=1}(35) - \dot{Q}_h^{k=1}(17)] \cdot (T_j - 17)}{35 - 17}, & \text{if } 25°F < T_j \leq 62°F \\ \dot{Q}_h^{k=2}(0) + \dfrac{[\dot{Q}_h^{k=2}(17) - \dot{Q}_h^{k=2}(0)] \cdot (T_j - 0)}{17 - 0}, & \text{if } -30°F < T_j \leq 25°F \end{cases}$$

$$\dot{E}_h^{k=1}(T_j) = \begin{cases} \dot{E}_h^{k=1}(47) + \dfrac{[\dot{E}_h^{k=1}(62) - \dot{E}_h^{k=1}(47)] \cdot (T_j - 47)}{62 - 47}, & \text{if } T_j > 41°F \\ \dot{E}_h^{k=1}(17) + \dfrac{[\dot{E}_h^{k=1}(35) - \dot{E}_h^{k=1}(17)] \cdot (T_j - 17)}{35 - 17}, & \text{if } 15°F < T_j \leq 41°F \\ \dot{E}_h^{k=2}(0) + \dfrac{[\dot{E}_h^{k=2}(17) - \dot{E}_h^{k=2}(0)] \cdot (T_j - 0)}{17 - 0}, & \text{if } -30°F < T_j \leq 15°F \end{cases}$$

$$\dot{E}_h^{k=2}(T_j) = \begin{cases} \dot{E}_h^{k=1}(47) + \dfrac{[\dot{E}_h^{k=1}(62) - \dot{E}_h^{k=1}(47)] \cdot (T_j - 47)}{62 - 47}, & \text{if } T_j > 62°F \\ \dot{E}_h^{k=1}(17) + \dfrac{[\dot{E}_h^{k=1}(35) - \dot{E}_h^{k=1}(17)] \cdot (T_j - 17)}{35 - 17}, & \text{if } 25°F < T_j \leq 62°F \\ \dot{E}_h^{k=2}(0) + \dfrac{[\dot{E}_h^{k=2}(17) - \dot{E}_h^{k=2}(0)] \cdot (T_j - 0)}{17 - 0}, & \text{if } -30°F < T_j \leq 25°F \end{cases}$$

BILLING CODE 6450–01–C

(4) Representations. Hallowell may make representations about the energy use of its boosted compression three-stage central air conditioners and heat pump products, for compliance, marketing, or other purposes, only to the extent that such products have been tested in accordance with the provisions outlined above, and such representations fairly disclose the results of such testing.

(5) This waiver shall remain in effect from the date of issuance of this order consistent with the provisions of 10 CFR 430.27(m).

(6) This waiver is conditioned upon the presumed validity of statements, representations, and documentary materials provided by the petitioner. This waiver may be revoked or modified at any time upon a determination that the factual basis underlying the petition for waiver is incorrect, or DOE determines that the results from the alternate test procedure are unrepresentative of the basic models' true energy consumption characteristics.

Issued in Washington, DC, on January 29, 2010.

Cathy Zoi,

Assistant Secretary, Energy Efficiency and Renewable Energy.

[FR Doc. 2010–2515 Filed 2–4–10; 8:45 am]

BILLING CODE 6450–01–P

DEPARTMENT OF ENERGY

Environmental Management Site-Specific Advisory Board, Hanford

AGENCY: Department of Energy.

ACTION: Notice of open meeting.

SUMMARY: This notice announces a meeting of the Environmental Management Site-Specific Advisory Board (EM SSAB), Hanford (known locally as the Hanford Advisory Board [HAB]), River and Plateau, Tank Waste, Public Involvement, Health Safety and Environmental Protection and Budgets and Contracts Subcommittees. The Federal Advisory Committee Act (Pub. L. 92–463, 86 Stat. 770) requires that public notice of this meeting be announced in the **Federal Register.**

DATES: Tuesday, February 16, 2010–1 p.m.–5 p.m., Wednesday, February 17, 2010—8:30 a.m.–4 p.m.

ADDRESSES: Hampton Inn, Columbia Pointe Ballroom, 486 Bradley, Richland, WA.

FOR FURTHER INFORMATION CONTACT: Paula Call, Federal Coordinator, Department of Energy Richland Operations Office, 825 Jadwin Avenue, P.O. Box 550, A7–75, Richland, WA, 99352; Phone: (509) 376–2048; or E-mail: *Paula_K_Call@rl.gov.*

SUPPLEMENTARY INFORMATION:

Purpose of the Board: The purpose of the Board is to make recommendations to DOE–EM and site management in the areas of environmental restoration, waste management, and related activities.

Tentative Agenda:

- Review by technical expert on his analysis of remediation alternatives examined in the Draft Tank Closure (TC) and Waste Management (WM) Environmental Impact Statement (EIS)
- Overview of the Draft TC and WM EIS findings by other stakeholder groups
- Discussion of HAB member comments on the TC and WM EIS
- Development of HAB advice principles
- Adjourn

Public Participation: The meeting is open to the public. The EM SSAB, Hanford, welcomes the attendance of the public at its advisory subcommittee meetings and will make every effort to accommodate persons with physical disabilities or special needs. If you require special accommodations due to a disability, please contact Paula Call at least seven days in advance of the meeting at the phone number listed above. Written statements may be filed with the Board either before or after the meeting. Individuals who wish to make oral statements pertaining to agenda items should contact Paula Call at the address or telephone number listed above. Requests must be received five days prior to the meeting and reasonable provision will be made to include the presentation in the agenda. The Deputy Designated Federal Officer is empowered to conduct the meeting in a fashion that will facilitate the orderly conduct of business. Individuals wishing to make public comments will be provided a maximum of five minutes to present their comments. This notice is being published less than 15 days prior to the meeting date due to programmatic issues that had to be resolved prior to the meeting date.

Minutes: Minutes will be available by writing or calling Paula Call's office at the address or phone number listed above. Minutes will also be available at the following Web site: *http://www.hanford.gov/?page=413&parent=397.*

Issued at Washington, DC, on February 1, 2010.

Rachel Samuel,

Deputy Committee Management Officer.

[FR Doc. 2010–2517 Filed 2–4–10; 8:45 am]

BILLING CODE 6405–01–P

DEPARTMENT OF ENERGY

Federal Energy Regulatory Commission

[Project No. 10808–043]

Boyce Hydro Power, LLC; Notice of Application for Amendment of License and Soliciting Comments, Motions To Intervene, and Protests

January 29, 2010.

Take notice that the following hydroelectric application has been filed with the Commission and is available for public inspection:

a. *Application Type:* Temporary Amendment of License.

b. *Project No.:* 10808–043.

c. *Date Filed:* September 2, 2009, and supplemented on November 4, 2009.

d. *Applicant:* Boyce Hydro Power, LLC (BHP).

e. *Name of Project:* Edenville Hydroelectric Project.

f. *Location:* The project is located on the Tittabawassee River in Gladwin and Midland Counties, Michigan.

g. *Filed Pursuant to:* Federal Power Act, 16 U.S.C. 791a–825r.

h. *Applicant Contact:* Frank Christie, General Manager, Boyce Hydro Power, LLC, 6000 South M–30, P.O. Box 15, Edenville, Michigan 48624; telephone (989) 689–3161.

i. *FERC Contact:* Anthony DeLuca, telephone: (202) 502–6632, and e-mail: *anthony.deluca@ferc.gov.*

j. *Deadline for filing comments, motions to intervene, and protests:* March 1, 2010.

Comments, protests, and interventions may be filed electronically via the Internet in lieu of paper. See 18 CFR 385.2001(a)(1)(iii) and the instructions on the Commission's Web site (*http://www.ferc.gov*) under the "e-filing" link. The Commission strongly encourages electronic filings.

All documents (original and eight copies) filed by paper should be sent to: Secretary, Federal Energy Regulatory Commission, 888 First Street, NE., Washington, DC 20426. Please include the project number (P–10808–043) on any comments or motions filed.

The Commission's Rules of Practice and Procedure require all interveners filing documents with the Commission to serve a copy of that document on each person whose name appears on the official service list for the project. Further, if an intervener files comments or documents with the Commission relating to the merits of an issue that may affect the responsibilities of a particular resource agency, they must also serve a copy of the document on that resource agency. A copy of any

motion to intervene must also be served upon each representative of the Applicant specified in the particular application.

k. *Description of Request:* The licensee requests a temporary variance from article 403, the bypass flow requirement, at the Edenville spillway for the 5 or 6 weeks it will take to construct the footings and first lift of the retaining walls. BHP states that shutting off the bypass flow will allow them to accomplish their work in the dry and eliminate the need for cofferdams, thus reducing the potential for contamination downstream.

l. *Locations of the Application:* A copy of the application is available for inspection and reproduction at the Commission's Public Reference Room, located at 888 First Street, NE., Room 2A, Washington, DC 20426, or by calling (202) 502–8371. This filing may also be viewed on the Commission's Web site at *http://www.ferc.gov* using the "eLibrary" link. Enter the docket number excluding the last three digits in the docket number field to access the document. You may also register online at *http://www.ferc.gov/docs-filing/esubscription.asp* to be notified via e-mail of new filings and issuances related to this or other pending projects. For assistance, call 1–866–208–3372 or e-mail *FERCOnlineSupport@ferc.gov,* for TTY, call (202) 502–8659. A copy is also available for inspection and reproduction at the address in item (h) above.

m. Individuals desiring to be included on the Commission's mailing list should so indicate by writing to the Secretary of the Commission.

n. *Comments, Protests, or Motions To Intervene:* Anyone may submit comments, a protest, or a motion to intervene in accordance with the requirements of Rules of Practice and Procedure, 18 CFR 385.210, .211, .214. In determining the appropriate action to take, the Commission will consider all protests or other comments filed, but only those who file a motion to intervene in accordance with the Commission's Rules may become a party to the proceeding. Any comments, protests, or motions to intervene must be received on or before the specified comment date for the particular application.

o. Any filings must bear in all capital letters the title "COMMENTS", "PROTEST", or "MOTION TO INTERVENE", as applicable, and the Project Number of the particular application to which the filing refers.

p. *Agency Comments:* Federal, state, and local agencies are invited to file comments on the described application. A copy of the application may be obtained by agencies directly from the Applicant. If an agency does not file comments within the time specified for filing comments, it will be presumed to have no comments. One copy of an agency's comments must also be sent to the Applicant's representatives.

Kimberly D. Bose,

Secretary.

[FR Doc. 2010–2484 Filed 2–4–10; 8:45 am]

BILLING CODE 6717–01–P

DEPARTMENT OF ENERGY

Federal Energy Regulatory Commission

[Project No. 10674–015]

NewPage Wisconsin System Inc., Kaukauna Utilities; Notice of Application for Transfer of License and Soliciting Comments and Motions To Intervene

January 29, 2010.

On January 25, 2010, NewPage Wisconsin System Inc. (transferor) and Kaukauna Utilities (transferee) filed an application for transfer of license of the Kimberly Project No. 10674 located on the Fox River in Outagamie County, Wisconsin.

The transferor and transferee seek Commission approval to transfer the license for the Kimberly Project from the transferor to the transferee.

Applicant Contacts: For transferor: Ronald O. Guay, NewPage Wisconsin System Inc., 35 Hartford Street, Rumford, ME 04276, (937) 369–2932, and Amy S. Koch, Patton Boggs LLP, 2550 M Street, NW., Washington, DC 20037, (202) 457–5618. For transferee: Mike Pedersen, Kaukauna Utilities, 777 Island Street, Kaukauna, WI 54130, (920) 766–5721, and Nancy J. Skancke, Law Offices of GKRSE, 1500 K St., NW. Suite 330, Washington, DC 20005, (202) 408–5400.

FERC Contact: Steven Sachs, (202) 502–8666 or *Steven.Sachs@ferc.gov.*

Deadline for filing comments and motions to intervene: 30 days from the issuance of this notice. Comments and motions to intervene may be filed electronically via the Internet. See 18 CFR 385.2001(a)(1)(iii)(2009) and the instructions on the Commission's website under the "e-Filing" link. If unable to be filed electronically, documents may be paper-filed. To paper-file, an original and eight copies should be mailed to: Kimberly D. Bose, Secretary, Federal Energy Regulatory Commission, 888 First Street, NE., Washington, DC 20426. For more information on how to submit these types of filings please go to the Commission's Web site located at *http://www.ferc.gov/filing-comments.asp.* More information about this project can be viewed or printed on the eLibrary link of the Commission's Web site at *http://www.ferc.gov/docs-filing/elibrary.asp.* Enter the docket number (P–10674) in the docket number field to access the document. For assistance, call toll-free 1–866–208–3372.

Kimberly D. Bose,

Secretary.

[FR Doc. 2010–2483 Filed 2–4–10; 8:45 am]

BILLING CODE 6717–01–P

DEPARTMENT OF ENERGY

Federal Energy Regulatory Commission

Notice of Attendance at NYISO Meetings

January 29, 2010.

The Federal Energy Regulatory Commission hereby gives notice that members of the Commission and Commission staff may attend the following upcoming NYISO meetings:

- NYISO Business Issues Committee
- February 3, 2010 (Rensselaer, NY)
- March 10, 2010 (Rensselaer, NY)
- April 7, 2010 (Rensselaer, NY)
- May 5, 2010 (Rensselaer, NY)
- June 2, 2010 (Rensselaer, NY)
- NYISO Management Committee
- February 24, 2010 (Rensselaer, NY)
- March 24, 2010 (Rensselaer, NY)
- April 21, 2010 (Rensselaer, NY)
- May 20, 2010 (Rensselaer, NY)
- June 15, 2010 (Rensselaer, NY)
- NYISO Annual Meeting June 14, 2010 (Bolton Landing, NY)
- NYISO ICAP Working Group
- February 12, 2010 (Rensselaer, NY)
- March 15, 2010 (Rensselaer, NY)
- April 23, 2010 (Rensselaer, NY)
- May 14, 2010 (Rensselaer, NY)
- June 17, 2010 (Rensselaer, NY)
- NYISO Operating Committee
- February 26, 2010 (Rensselaer, NY)
- March 11, 2010 (Rensselaer, NY)
- April 8, 2010 (Rensselaer, NY)
- May 6, 2010 (Rensselaer, NY)
- June 3, 2010 (Rensselaer, NY)
- NYISO Transmission Planning Advisory Subcommittee
- February 19, 2010 (Rensselaer, NY)
- March 29, 2010 (Rensselaer, NY)
- April 29, 2010 (Rensselaer, NY)
- May 26, 2010 (Rensselaer, NY)
- June 25, 2010 (Rensselaer, NY)

For additional meeting information, see: *http://www.nyiso.com/public/committees/calendar/index.jsp*

The discussions at each of the meetings described above may address matters at issue in pending proceedings including the following:

Docket Nos. EL07–39 and ER08–695, *New York Independent System Operator, Inc.*
Docket No. EL09–57, *Astoria Gas Turbine Power LLC v. New York Independent System Operator, Inc.*
Docket No. EL10–033, *New York Independent System Operator, Inc.*
Docket No. ER01–3155, *New York Independent System Operator, Inc.*
Docket Nos. ER01–3001–021/ER03–647–012 and ER01–3001–022/ER03–647–013, *New York Independent System Operator, Inc.*
Docket No. ER04–449, *New York Independent System Operator, Inc.*
Docket No. ER04–230, *New York Independent System Operator, Inc.*
Docket No. ER07–612, *New York Independent System Operator, Inc.*
Docket No. ER08–1281, *New York Independent System Operator, Inc.*
Docket No. ER08–867, *New York Independent System Operator, Inc.*
Docket No. ER09–1142, *New York Independent System Operator, Inc.*
Docket No. ER09–1204, *New York Independent System Operator, Inc.*
Docket No. ER09–1682, *New York Independent System Operator, Inc.*
Docket No. ER09–405, *New York Independent System Operator, Inc.*
Docket No. ER10–65, *New York Independent System Operator, Inc.*
Docket No. ER10–119, *New York Independent System Operator, Inc.*
Docket No. ER10–603, *New York Independent System Operator, Inc.*
Docket No. ER10–424, *New York Independent System Operator, Inc.*
Docket No. ER10–290, *New York Independent System Operator, Inc.*
Docket No. ER10–554, *New York Independent System Operator, Inc.*
Docket No. ER10–555, *New York Independent System Operator, Inc.*
Docket No. ER10–573, *New York Independent System Operator, Inc.*
Docket No. OA08–52; *New York Independent System Operator, Inc.*
Docket No. OA09–26, *New York Independent System Operator, Inc.*

The meetings are open to stakeholders. For more information, contact Jesse Hensley, Office of Energy Markets Regulation, Federal Energy Regulatory Commission at (202) 502–6228 or *Jesse.Hensley@ferc.gov.*

Kimberly D. Bose,

Secretary.

[FR Doc. 2010–2482 Filed 2–4–10; 8:45 am]

BILLING CODE 6717–01–P

DEPARTMENT OF ENERGY

Bonneville Power Administration

Electrical Interconnection of the Lower Snake River Wind Energy Project

AGENCY: Bonneville Power Administration (BPA), Department of Energy (DOE).

ACTION: Notice of Availability of Record of Decision (ROD).

SUMMARY: The Bonneville Power Administration (BPA) has decided to offer Puget Sound Energy Inc., a Large Generator Interconnection Agreement for interconnection of up to 1250 megawatts of power into the Federal Columbia River Transmission System. The power would be generated from their proposed Lower Snake River Wind Energy Project (Wind Project) in Garfield and Columbia counties, Washington. To interconnect the Wind Project, BPA will construct a new substation (Central Ferry Substation) on the Little Goose-Lower Granite 500-kilovolt transmission lines near the Port of Central Ferry, Washington. This decision to interconnect the Wind Project is consistent with and tiered to BPA's Business Plan Environmental Impact Statement (DOE/EIS–0183, June 1995), and the Business Plan Record of Decision (BP ROD, August 1995).

ADDRESSES: Copies of this tiered ROD and the Business Plan EIS may be obtained by calling BPA's toll-free document request line, 1–800–622–4520. The RODs and EIS are also available on our Web site, *http://www.efw.bpa.gov.*

FOR FURTHER INFORMATION CONTACT: Tish Eaton, Bonneville Power Administration—KEC–4, P.O. Box 3621, Portland, Oregon 97208–3621; toll-free telephone number 1–800–622–4519; fax number 503–230–5699; or e-mail *tkeaton@bpa.gov.*

Issued in Portland, Oregon, on January 28, 2010.

Stephen J. Wright,

Administrator and Chief Executive Officer.

[FR Doc. 2010–2518 Filed 2–4–10; 8:45 am]

BILLING CODE 6450–01–P

DEPARTMENT OF ENERGY

Federal Energy Regulatory Commission

Notice of Competing Preliminary Permit Applications Accepted for Filing and Soliciting Comments, Motions To Intervene, and Competing Applications

January 29, 2010.

Brookfield Power United States Generation Development, LLC ..... Project No. 13077–000.
Robertson Energy Group, LLC ..... Project No. 13081–000.

Brookfield Power United States Generation Development, LLC (Brookfield Power) and Robertson Energy Group, LLC (Robertson Energy) filed preliminary permit applications, pursuant to section 4(f) of the Federal Power Act, proposing to study the feasibility of the George W. Andrews Hydroelectric Project located at the existing George W. Andrews Lock and Dam on the Chattahoochee River, Early County, Georgia, and Huston County, Alabama, near the town of Columbia, Alabama. The projects would occupy federal lands under the jurisdiction of the U. S. Army Corps of Engineers. The sole purpose of a preliminary permit, if issued, is to grant the permit holder priority to file a license application during the permit term. A preliminary permit does not authorize the permit holder to perform any land disturbing activities or otherwise enter upon lands or waters owned by others without the owners' express permission.

The proposed Projects description:

The proposed George W. Andrews Lock and Dam Hydroelectric Project by Brookfield Power (Project No. 13077–000, filed on November 16, 2007), would be built on the Alabama side and would consist of: (1) A new powerhouse containing four new pit turbine-generators each rated at 6 MW for a total combined plant capacity of 24 MW; (2) an intake channel and a tailrace channel; (3) an approximately ten miles long transmission line connecting the powerhouse to an existing substation; and (4) appurtenant facilities. The proposed project would have an average annual generation of 89 gigawatt-hours.

The proposed George W. Andrews Hydroelectric Project by Robertson Energy (Project No. 13081–000, filed on November 21, 2007), would be built on the Alabama side and would consist of: (1) A new powerhouse containing four new turbine-generators each rated at 4 MW for a total combined plant capacity of 16 MW; (2) an intake channel and a

tailrace channel; (3) an approximately ten miles long transmission line connecting the powerhouse to an existing substation; and (4) appurtenant facilities. The proposed project would have an average annual generation of 75 gigawatt-hours.

Applicants Contact: For Brookfield Power: Mr. Jeffrey M. Auser, P.E., BPUS Generation Development LLC, 225 Greenfield Parkway, Suite 201, Liverpool, NY 13088, telephone: (315) 413–2821. For Robertson Energy: Mr. James R. Robertson, 5702 Reno Court, Boonsboro, MD 21713, telephone: (301) 432–7882.

FERC Contact: Sergiu Serban, (202) 502–6211.

Deadline for filing comments, motions to intervene, competing applications (without notices of intent), or notices of intent to file competing applications: 60 days from the issuance of this notice. Competing applications and notices of intent must meet the requirements of 18 CFR 4.36. Comments, motions to intervene, notices of intent, and competing applications may be filed electronically via the Internet. See 18 CFR 385.2001(a)(1)(iii) and the instructions on the Commission's Web site (*http://www.ferc.gov/docs-filing/ferconline.asp*) under the "eFiling" link. For a simpler method of submitting text only comments, click on "Quick Comment." For assistance, please contact FERC Online Support at *FERCOnlineSupport@ferc.gov;* call toll-free at (866) 208–3676; or, for TTY, contact (202) 502–8659. Although the Commission strongly encourages electronic filing, documents may also be paper-filed. To paper-file, mail an original and eight copies to: Kimberly D. Bose, Secretary, Federal Energy Regulatory Commission, 888 First Street, NE., Washington, DC 20426.

More information about this project, including a copy of the application, can be viewed or printed on the "eLibrary" link of the Commission's Web site at *http://www.ferc.gov/docs-filing/elibrary.asp.* Enter the docket number (P–13077–000, or 13081–000) in the docket number field to access the document. For assistance, contact FERC Online Support.

Kimberly D. Bose,

Secretary.

[FR Doc. 2010–2485 Filed 2–4–10; 8:45 am]

BILLING CODE 6717–01–P

DEPARTMENT OF ENERGY

Federal Energy Regulatory Commission

[Docket No. PR10–6–000]

Arkansas Oklahoma Gas Corporation; Notice of Petition for Rate Approval

January 29, 2010.

Take notice that on January 15, 2010, Arkansas Oklahoma Gas Corporation (AOG) filed a petition for rate approval pursuant to section 284.123(b)(2) of the Commission's regulations. AOG requests that the Commission approve a decrease in its maximum interruptible transportation rate from $0.1502 to $0.0515 per MMBtu and a decrease for company fuel use and lost and unaccounted for gas charge from 2.87 percent to 2.65 percent.

Any person desiring to participate in this rate proceeding must file a motion to intervene or to protest this filing must file in accordance with Rules 211 and 214 of the Commission's Rules of Practice and Procedure (18 CFR 385.211 and 385.214). Protests will be considered by the Commission in determining the appropriate action to be taken, but will not serve to make protestants parties to the proceeding. Any person wishing to become a party must file a notice of intervention or motion to intervene, as appropriate. Such notices, motions, or protests must be filed on or before the date as indicated below. Anyone filing an intervention or protest must serve a copy of that document on the Applicant. Anyone filing an intervention or protest on or before the intervention or protest date need not serve motions to intervene or protests on persons other than the Applicant.

The Commission encourages electronic submission of protests and interventions in lieu of paper using the "eFiling" link at *http://www.ferc.gov.* Persons unable to file electronically should submit an original and 14 copies of the protest or intervention to the Federal Energy Regulatory Commission, 888 First Street, NE., Washington, DC 20426.

This filing is accessible on-line at *http://www.ferc.gov,* using the "eLibrary" link and is available for review in the Commission's Public Reference Room in Washington, DC. There is an "eSubscription" link on the Web site that enables subscribers to receive e-mail notification when a document is added to a subscribed docket(s). For assistance with any FERC Online service, please e-mail *FERCOnlineSupport@ferc.gov,* or call (866) 208–3676 (toll free). For TTY, call (202) 502–8659.

Comment Date: 5 p.m. Eastern time on Friday, February 12, 2010.

Kimberly D. Bose,

Secretary.

[FR Doc. 2010–2481 Filed 2–4–10; 8:45 am]

BILLING CODE 6717–01–P

DEPARTMENT OF ENERGY

Federal Energy Regulatory Commission

[Docket No. CP10–12–000]

Florida Gas Transmission Company, LLC; Notice of Withdrawal of Staff Protest to Proposed Blanket Certificate Activity

January 29, 2010.

Commission staff (Protestor) hereby withdraws its Protest to the Proposed Blanket Certificate Activity filed in the above-referenced proceeding on January 7, 2010.

In its prior notice request filed on October 29, 2009 (in Docket No. CP10–12–000) and noticed on November 9, 2009,[1] Florida Gas Transmission Company, LLC proposed to replace, upgrade, and relocate portions of the existing St. Petersburg and Clearwater South Laterals and Block Valve 24–10 in the City of Clearwater, Pinellas County, Florida. Protestor protested the prior notice because the U.S. Fish and Wildlife Service (USFWS) had not determined if the proposed project would impact any federally listed threatened or endangered species. Subsequent to the filing of the protest, USFWS made a determination that no impacts on federally listed species would occur as a result of the proposed project. Thus, Protestor's environmental concern has been satisfied. Accordingly, Protestor hereby withdraws its Protest to the Proposed Blanket Certificate Activity filed in the instant docket on January 7, 2010.

Kimberly D. Bose,

Secretary.

[FR Doc. 2010–2486 Filed 2–4–10; 8:45 am]

BILLING CODE 6717–01–P

[1] Notice of the request was published in the **Federal Register** on November 17, 2009 (74 *FR* 59,161).

ENVIRONMENTAL PROTECTION AGENCY

[EPA–HQ–OW–2005–0023; FRL–9110–7]

Agency Information Collection Activities; Submission to OMB for Review and Approval; Comment Request; Clean Water Act Section 404 State-Assumed Programs (Renewal); EPA ICR No. 0220.11, OMB Control No. 2040–0168

AGENCY: Environmental Protection Agency (EPA).

ACTION: Notice.

SUMMARY: In compliance with the Paperwork Reduction Act (PRA)(44 U.S.C. 3501 *et seq.*), this document announces that an Information Collection Request (ICR) has been forwarded to the Office of Management and Budget (OMB) for review and approval. This is a request to renew an existing approved collection. The ICR, which is abstracted below, describes the nature of the information collection and its estimated burden and cost.

DATES: Additional comments may be submitted on or before March 8, 2010.

ADDRESSES: Submit your comments, referencing Docket ID No. EPA–HQ–OW–2005–0023, to (1) EPA online using *http://www.regulations.gov* (our preferred method), by e-mail to *ow-docket@epa.gov,* or by mail to: EPA Docket Center, Environmental Protection Agency, Water Docket, Environmental Protection Agency, Mailcode: 28221T, 1200 Pennsylvania Ave., NW., Washington, DC 20460, and (2) OMB by mail to: Office of Information and Regulatory Affairs, Office of Management and Budget (OMB), Attention: Desk Officer for EPA, 725 17th Street, NW., Washington, DC 20503.

FOR FURTHER INFORMATION CONTACT: Kathy Hurld, Office of Wetlands, Oceans, and Watersheds, Wetlands Division (4502T), Environmental Protection Agency, 1200 Pennsylvania Ave., NW., Washington, DC 20460; telephone: 202–566–1348; fax number: 202–566–1349; e-mail address: *hurld.kathy@epa.gov.*

SUPPLEMENTARY INFORMATION: EPA has submitted the following ICR to OMB for review and approval according to the procedures prescribed in 5 CFR 1320.12. On August 26, 2009 (74 FR 43116) EPA sought comments on this ICR pursuant to 5 CFR 1320.8(d). EPA received no comments. Any additional comments on this ICR should be submitted to EPA and OMB within 30 days of this notice.

EPA has established a public docket for this ICR under Docket ID No. EPA–HQ–OW–2005–0023, which is available for online viewing at *http://www.regulations.gov,* or in person viewing at the Water Docket in the EPA Docket Center (EPA/DC), EPA West, Room 3334, 1301 Constitution Ave., NW., Washington, DC. The EPA/DC Public Reading Room is open from 8:30 a.m. to 4:30 p.m., Monday through Friday, excluding legal holidays. The telephone number for the Reading Room is 202–566–1744, and the telephone number for the Water Docket is 202–566–2426.

Use EPA's electronic docket and comment system at *http://www.regulations.gov,* to submit or view public comments, access the index listing of the contents of the docket, and to access those documents in the docket that are available electronically. Once in the system, select "docket search," then key in the docket ID number identified above. Please note that EPA's policy is that public comments, whether submitted electronically or in paper, will be made available for public viewing at *http://www.regulations.gov* as EPA receives them and without change, unless the comment contains copyrighted material, confidential business information (CBI), or other information whose public disclosure is restricted by statute. For further information about the electronic docket, go to *http://www.regulations.gov.*

Title: Clean Water Act Section 404 State-Assumed Programs (Renewal).

ICR numbers: EPA ICR No. 0220.11, OMB Control No. 2040–0168.

ICR Status: This ICR is scheduled to expire on February 28, 2010. Under OMB regulations, the Agency may continue to conduct or sponsor the collection of information while this submission is pending at OMB. An Agency may not conduct or sponsor, and a person is not required to respond to, a collection of information, unless it displays a currently valid OMB control number. The OMB control numbers for EPA's regulations in title 40 of the CFR, after appearing in the **Federal Register** when approved, are listed in 40 CFR part 9, are displayed either by publication in the **Federal Register** or by other appropriate means, such as on the related collection instrument or form, if applicable. The display of OMB control numbers in certain EPA regulations is consolidated in 40 CFR part 9.

Abstract: Section 404(g) of the Clean Water Act authorizes States and Tribes to assume the section 404 permit program. States/Tribes must demonstrate that they meet the statutory and regulatory requirements (40 CFR part 233) for an approvable program. Specified information and documents must be submitted by the State/Tribe to EPA to request assumption. Once the required information and documents are submitted and EPA has a complete assumption request package, the statutory time clock for EPA's decision to either approve or deny the State/Tribe's assumption request starts. The information contained in the assumption request is made available to the other involved Federal agencies (Corps of Engineers, U.S. Fish and Wildlife Service, and National Marine Fisheries Service) and to the general public for review and comment. These minimum information requirements are based on the information that must be submitted when applying for a section 404 permit from the Corps of Engineers (33 CFR part 325).

States/Tribes must be able to issue permits that comply with the 404(b)(1) Guidelines, the environmental review criteria. States/Tribes and the reviewing Federal agencies must be able to review proposed projects to evaluate, avoid, minimize and compensate for anticipated impacts. EPA's assumption regulations establish recommended elements that should be included in the State/Tribes' permit application, so that sufficient information is available to make a thorough analysis of anticipated impacts. These minimum information requirements are based on the information that must be submitted when applying for a section 404 permit from the Corps of Engineers (CWA section 404(h)(1)(A)(i) and section 404(j) and 40 CFR 230.10, 233.20, 233.21, 233.34, and 233.50) (33 CFR 325.1).

EPA is responsible for oversight of assumed programs to ensure that State/Tribal programs are in compliance with applicable requirements and that State/Tribal permit decisions adequately consider, avoid, minimize and compensate for anticipated impacts. States/Tribes must evaluate their programs annually and submit the results in a report to EPA. EPA's assumption regulations establish minimum requirements for the annual report (40 CFR 233.52).

Burden Statement: This collection of information is separated into three pieces. The annual public reporting and record keeping burden for this collection of information is estimated to average 520 hours to request program assumption, 5 hours to complete a permit application and 80 hours to prepare the annual report. Burden means the total time, effort, or financial resources expended by persons to generate, maintain, retain, or disclose or provide information to or for a Federal agency. This includes the time needed

to review instructions; develop, acquire, install, and utilize technology and systems for the purposes of collecting, validating, and verifying information, processing and maintaining information, and disclosing and providing information; adjust the existing ways to comply with any previously applicable instructions and requirements which have subsequently changed; train personnel to be able to respond to a collection of information; search data sources; complete and review the collection of information; and transmit or otherwise disclose the information.

Respondents/Affected Entities: States and Tribes seeking to or having assumed section 404 permit programs.

Estimated Number of Respondents: 6.

Frequency of Response: Once, On Occasion, Annually.

Estimated Total Annual Hour Burden: 101,360.

Estimated Total Annual Cost: There are no annualized capital or O&M costs.

Changes in the Estimates: There is no change in the total estimated burden currently identified in the OMB Inventory of Approved ICR Burdens.

Dated: February 1, 2010.

John Moses,

Acting Director, Collection Strategies Division.

[FR Doc. 2010–2538 Filed 2–4–10; 8:45 am]

BILLING CODE 6560–50–P

ENVIRONMENTAL PROTECTION AGENCY

[EPA–HQ–OW–2005–0019; FRL–9110–8]

Agency Information Collection Activities; Submission to OMB for Review and Approval; Comment Request; Contaminant Occurrence Data in Support of EPA's Third Six-Year Review of National Primary Drinking Water Regulations (Renewal); EPA ICR No. 2231.02, OMB Control No. 2040–0275

AGENCY: Environmental Protection Agency (EPA).

ACTION: Notice.

SUMMARY: In compliance with the Paperwork Reduction Act (PRA) (44 U.S.C. 3501 *et seq.*), this document announces that an Information Collection Request (ICR) has been forwarded to the Office of Management and Budget (OMB) for review and approval. This is a request to renew an existing approved collection. The ICR, which is abstracted below, describes the nature of the information collection and its estimated burden and cost.

DATES: Additional comments may be submitted on or before March 8, 2010.

ADDRESSES: Submit your comments, referencing Docket ID No. EPA–HQ–OW–2005–0019, to (1) EPA online using *http://www.regulations.gov* (our preferred method), or by mail to: EPA Docket Center, Environmental Protection Agency, Water Docket (MC 28221T), 1200 Pennsylvania Ave., NW., Washington, DC 20460, and (2) OMB by mail to: Office of Information and Regulatory Affairs, Office of Management and Budget (OMB), Attention: Desk Officer for EPA, 725 17th Street, NW., Washington, DC 20503.

FOR FURTHER INFORMATION CONTACT: Shari Bauman, Office of Ground Water and Drinking Water, Standards and Risk Management Division (MC 4607M), Environmental Protection Agency, 1200 Pennsylvania Ave., NW., Washington, DC 20460; telephone number: (202) 564–0293.

SUPPLEMENTARY INFORMATION: EPA has submitted the following ICR to OMB for review and approval according to the procedures prescribed in 5 CFR 1320.12. On September 11, 2009 (74 FR 46765), EPA sought comments on this ICR pursuant to 5 CFR 1320.8(d). EPA received no comments. Any additional comments on this ICR should be submitted to EPA and OMB within 30 days of this notice.

EPA has established a public docket for this ICR under Docket ID No. EPA–HQ–OW–2005–0019, which is available for online viewing at *http://www.regulations.gov,* or in person viewing at the Water Docket in the EPA Docket Center (EPA/DC), EPA West, Room 3334, 1301 Constitution Ave., NW., Washington, DC. The EPA/DC Public Reading Room is open from 8:30 a.m. to 4:30 p.m., Monday through Friday, excluding legal holidays. The telephone number for the Reading Room is 202–566–1744, and the telephone number for the Water Docket is 202–566–2426.

Use EPA's electronic docket and comment system at *http://www.regulations.gov,* to submit or view public comments, access the index listing of the contents of the docket, and to access those documents in the docket that are available electronically. Once in the system, select "docket search," then key in the docket ID number identified above. Please note that EPA's policy is that public comments, whether submitted electronically or in paper, will be made available for public viewing at *http://www.regulations.gov* as EPA receives them and without change, unless the comment contains copyrighted material, confidential business information (CBI), or other information whose public disclosure is restricted by statute. For further information about the electronic docket, go to *http://www.regulations.gov.*

Title: Contaminant Occurrence Data in Support of EPA's Third Six-Year Review of National Primary Drinking Water Regulations (Renewal).

ICR numbers: EPA ICR No. 2231.02, OMB Control No. 2040–0275.

ICR Status: This ICR is scheduled to expire on February 28, 2010. Under OMB regulations, the Agency may continue to conduct or sponsor the collection of information while this submission is pending at OMB. An Agency may not conduct or sponsor, and a person is not required to respond to, a collection of information, unless it displays a currently valid OMB control number. The OMB control numbers for EPA's regulations in title 40 of the CFR, after appearing in the **Federal Register** when approved, are listed in 40 CFR part 9, are displayed either by publication in the **Federal Register** or by other appropriate means, such as on the related collection instrument or form, if applicable. The display of OMB control numbers in certain EPA regulations is consolidated in 40 CFR part 9.

Abstract: The Safe Drinking Water Act (SDWA), as amended in 1996, requires that EPA review existing National Primary Drinking Water Regulations (NPDWRs) no less often than every six years. This cyclical evaluation is referred to as the "Six-Year Review." Through the Six-Year Review process, the EPA reviews existing NPDWRs and evaluates whether potential revisions are appropriate to maintain or improve the health of those persons served by public water systems.

EPA completed and published review results for the first Six-Year Review cycle (1996–2002) on July 18, 2003 (68 FR 42908). The occurrence assessments conducted for the first Six-Year Review were based on compliance monitoring data from 1993 to 1997, which were voluntarily provided by States.

EPA expects to complete and publish the review results for the second Six-Year Review cycle (2003–2009) in the near future. The occurrence assessments conducted for the second Six-Year Review are based on data collected between 1998 and 2005 and voluntarily submitted by States and other primacy agencies under the current Information Collection Request (ICR No. 2231.01, 71 FR 32340, June 5, 2006).

To support future Six-Year Reviews, EPA's Office of Water is renewing the current ICR and requesting that States

and other primacy agencies voluntarily provide historical compliance monitoring data for community water systems (CWSs) and non-transient non-community water systems (NTNCWSs) to the Agency. The Agency is requesting contaminant occurrence data and treatment technique data collected from 2006 to 2012 for all regulated chemical, radiological and microbiological contaminants as well as data from the Ground Water Rule (GWR), Surface Water Treatment Rules (SWTRs), Long Term 1 and 2 Enhanced Surface Water Treatment Rules (LT1 and LT2) and Interim Enhanced Surface Water Treatment Rule (IESWTR), Stage 1 and 2 Disinfectants and Disinfection Byproducts Rules (DBPRs) and Filter Backwash Recycling Rule (FBRR). This collection request is a renewal of the current ICR (ICR No. 2231.01) with the addition of requesting treatment technique information.

The compliance monitoring records in this information collection (including all results for analytical detections and non-detections) and the treatment technique information (e.g., sanitary survey and corrective action information) will provide the data needed to conduct statistical estimates of national occurrence for regulated contaminants and will assist in the evaluation of regulation effectiveness. These national occurrence estimates and treatment technique information will support the SDWA section 1412(b)(9) mandate, which requires the Agency to review the existing NPDWRs and determine whether revisions are appropriate. In addition, SDWA section 1445(g) requires the Agency to maintain a national drinking water contaminant occurrence database (i.e., the National Contaminant Occurrence Data (NCOD)) using occurrence data for both regulated and unregulated contaminants in public water systems (PWSs). This data collection will provide new occurrence data on regulated contaminants to maintain the NCOD.

Burden Statement: The annual public reporting and recordkeeping burden for this collection of information is estimated to average 13.5 hours per State. Burden means the total time, effort, or financial resources expended by persons to generate, maintain, retain, or disclose or provide information to or for a Federal agency. This includes the time needed to review instructions; develop, acquire, install, and utilize technology and systems for the purposes of collecting, validating, and verifying information, processing and maintaining information, and disclosing and providing information; adjust the existing ways to comply with any previously applicable instructions and requirements which have subsequently changed; train personnel to be able to respond to a collection of information; search data sources; complete and review the collection of information; and transmit or otherwise disclose the information.

Respondents/Affected Entities: State drinking water primacy agencies.

Estimated Number of Respondents: 56.

Frequency of Response: Once.

Estimated Total Annual Hour Burden: 756.

Estimated Total Annual Cost: $37,922, this includes $0 annualized capital or O&M costs.

Changes in the Estimates: There is an increase of 75 hours in the total estimated burden currently identified in the OMB Inventory of Approved ICR Burdens. This increase reflects the slight modification in the scope (i.e., to request additional data for several rules such as the GWR, SWTRs, DBPRs and FBRR).

Dated: January 29, 2010.

John Moses,

Director, Collection Strategies Division.

[FR Doc. 2010–2539 Filed 2–4–10; 8:45 am]

BILLING CODE 6560–50–P

ENVIRONMENTAL PROTECTION AGENCY

[EPA–HQ–OECA–2009–0393; FRL–9109–6]

Agency Information Collection Activities; Submission to OMB for Review and Approval; Comment Request; NESHAP for Printing and Publishing Industry (Renewal), EPA ICR Number 1739.06, OMB Control Number 2060–0335

AGENCY: Environmental Protection Agency (EPA).

ACTION: Notice.

SUMMARY: In compliance with the Paperwork Reduction Act (44 U.S.C. 3501 *et seq.*), this document announces that an Information Collection Request (ICR) has been forwarded to the Office of Management and Budget (OMB) for review and approval. This is a request to renew an existing approved collection. The ICR which is abstracted below describes the nature of the collection and the estimated burden and cost.

DATES: Additional comments may be submitted on or before March 8, 2010.

ADDRESSES: Submit your comments, referencing docket ID number EPA–HQ–OECA–2009–0393, to (1) EPA online using *http://www.regulations.gov* (our preferred method), or by e-mail to *docket.oeca@epa.gov,* or by mail to: EPA Docket Center (EPA/DC), Environmental Protection Agency, Enforcement and Compliance Docket and Information Center, mail code 28221T, 1200 Pennsylvania Avenue, NW., Washington, DC 20460, and (2) OMB at: Office of Information and Regulatory Affairs, Office of Management and Budget (OMB), Attention: Desk Officer for EPA, 725 17th Street, NW., Washington, DC 20503.

FOR FURTHER INFORMATION CONTACT: Learia Williams, Compliance Assessment and Media Programs Division, Office of Compliance, Mail Code 2223A, Environmental Protection Agency, 1200 Pennsylvania Avenue, NW., Washington, DC 20460; telephone number: (202) 564–4113; fax number: (202) 564–0050; e-mail address: *williams.learia@epa.gov.*

SUPPLEMENTARY INFORMATION: EPA has submitted the following ICR to OMB for review and approval according to the procedures prescribed in 5 CFR 1320.12. On July 8, 2009 (74 FR 32580), EPA sought comments on this ICR pursuant to 5 CFR 1320.8(d). EPA received no comments. Any additional comments on this ICR should be submitted to EPA and OMB within 30 days of this notice.

EPA has established a public docket for this ICR under docket ID number EPA–HQ–OECA–2009–0393, which is available for public viewing online at *http://www.regulations.gov,* in person viewing at the Enforcement and Compliance Docket in the EPA Docket Center (EPA/DC), EPA West, Room 3334, 1301 Constitution Avenue, NW., Washington, DC. The EPA Docket Center Public Reading Room is open from 8:30 a.m. to 4:30 p.m., Monday through Friday, excluding legal holidays. The telephone number for the Reading Room is (202) 566–1744, and the telephone number for the Enforcement and Compliance Docket is (202) 566–1752.

Use EPA's electronic docket and comment system at *http://www.regulations.gov,* to submit or view public comments, access the index listing of the contents of the docket, and to access those documents in the docket that are available electronically. Once in the system, select "docket search," then key in the docket ID number identified above. Please note that EPA's policy is that public comments, whether submitted electronically or in paper will be made available for public viewing at *http://www.regulations.gov,* as EPA receives them and without change, unless the comment contains copyrighted material, Confidential

Business Information (CBI), or other information whose public disclosure is restricted by statute. For further information about the electronic docket, go to *http://www.regulations.gov.*

Title: NESHAP for Printing and Publishing Industry (Renewal).

ICR Numbers: EPA ICR Number 1739.06, OMB Control Number 2060–0335.

ICR Status: This ICR is schedule to expire on March 31, 2010. Under OMB regulations, the Agency may continue to conduct or sponsor the collection of information while this submission is pending at OMB. An Agency may not conduct or sponsor, and a person is not required to respond to, a collection of information unless it displays a currently valid OMB control number. The OMB control numbers for EPA's regulations in title 40 of the CFR, after appearing in the **Federal Register** when approved, are listed in 40 CFR part 9, and displayed either by publication in the **Federal Register** or by other appropriate means, such as on the related collection instrument or form, if applicable. The display of OMB control numbers in certain EPA regulations is consolidated in 40 CFR part 9.

Abstract: The National Emission Standards of Hazardous Air Pollutants (NESHAP) for Printing and Publishing Industry were proposed on March 14, 1995 (60 FR 13664), promulgated on May 30, 1996 (61 FR 27131), and amended on May 24, 2006 (71 FR 29792). These standards apply to the following facilities in 40 CFR subpart KK: Publication rotogravure, product and packaging rotogravure, and wide-web flexographic printing presses at major sources. The effective date was May 30, 1999, for sources existing on May 30, 1996. For new sources or reconstructed sources after May 30, 1996, the effective date of startup is May 30, 1996, whichever is later.

Owners and operators of a new and existing area source are subject to the General Provision (40 CFR part 63, subpart A). In general, all NESHAP standards require initial notifications, performance tests plans, and periodic reports by the owners/operators of the affected facilities. For the facilities installing continuous monitoring systems (CMS), there are performance test and maintenance reports.

They are also required to maintain records of the occurrence and duration of any startup, shutdown, or malfunction in the operation of an affected facility, or any period during which the monitoring system is inoperative. These notifications, reports, and records are essential in determining compliance and are required of all affected facilities subject to NESHAP. Semiannual summary reports are also required.

Any owner or operator subject to the provisions of this subpart must maintain a file of these measurements, and retain the file for at least five years following the collection of such measurements, maintenance reports, and records.

All reports are sent to the delegated state or local authority. In the event that there is no such delegated authority, the reports are sent directly to the EPA regional office. This information is being collected to assure compliance with 40 CFR part 63, subpart KK, as authorized in sections 112 and 114(a) of the Clean Air Act. The required information consists of emissions data and other information that have been determined to be private.

An agency may not conduct or sponsor, and a person is not required to respond to, a collection of information unless it displays a currently valid OMB Control Number. The OMB Control Number for EPA regulations listed in 40 CFR part 9 and 48 CFR chapter 15, are identified on the form and/or instrument, if applicable.

Burden Statement: The annual public reporting and recordkeeping burden for this collection of information estimated to average 95 hour per response. Burden means the total time, effort, or financial resources expended by persons to generate, maintain, retain, or disclose, and provide information to or for a Federal agency. This includes the time needed to review instructions; develop, acquire, install, and utilize technology and systems for the purposes of collecting, validating, and verifying information, processing and maintaining information, and disclosing and providing information. All existing ways will have to adjust to comply with any previously applicable instructions and requirements that have subsequently changed; train personnel to be able to respond to a collection of information; search data sources; complete and review the collection of information; and transmit or otherwise disclose the information.

Respondents/Affected Entities: Printing and publishing industry.

Estimated Number of Respondents: 352.

Frequency of Response: Initially, annually, and semiannually.

Estimated Total Annual Hour Burden: 58,215.

Estimated Total Annual Cost: $5,888,997, which includes $5,474,997 in labor costs, $0 in capital/startup costs, and $414,000 in operation and maintenance (O&M) costs.

Changes in the Estimates: There is a change in this ICR as compared to the previous one. Based on our discussions with the printing and publishing industry representatives, the printing industry in particular, will be experiencing essentially a flat production in the coming years with no new facilities anticipated. This ICR also reflects the most recent hourly labor rates which, takes into account the managerial, technical and clerical burdens as compared to the previous ICR. Corrections include a minor mathematical error and recalculation of the number of responses.

There is a small increase in the capital/startup and operations and maintenance (O&M) costs from the previous ICR, which is due to rounding-up the number of affective respondents.

Dated: February 1, 2010.

John Moses,

Director, Collection Strategies Division.

[FR Doc. 2010–2536 Filed 2–4–10; 8:45 am]

BILLING CODE 6560–50–P

ENVIRONMENTAL PROTECTION AGENCY

[ER–FRL–8988–1]

Environmental Impact Statements and Regulations; Availability of EPA Comments

Availability of EPA comments prepared pursuant to the Environmental Review Process (ERP), under section 309 of the Clean Air Act and Section 102(2)(c) of the National Environmental Policy Act as amended. Requests for copies of EPA comments can be directed to the Office of Federal Activities at 202–564–7146 or *http://www.epa.gov/compliance/nepa/.*

An explanation of the ratings assigned to draft environmental impact statements (EISs) was published in **Federal Register** dated July 17, 2009 (74 FR 34754).

Notice

In accordance with Section 309(a) of the Clean Air Act, EPA is required to make its comments on EISs issued by other Federal agencies public. Historically, EPA has met this mandate by publishing weekly notices of availability of EPA comments, which includes a brief summary of EPA's comment letters, in the **Federal Register**. Since February 2008, EPA has been including its comment letters on EISs on its Web site at: *http://www.epa.gov/compliance/nepa/eisdata.html.* Including the entire EIS comment letters on the Web site

satisfies the Section 309(a) requirement to make EPA's comments on EISs available to the public. Accordingly, after March 31, 2010, EPA will discontinue the publication of this notice of availability of EPA comments in the **Federal Register**.

Draft EISs

EIS No. 20090210, ERP No. D–FRC–A03087–00, Ruby Pipeline Project, Proposed Natural Gas Pipeline Facilities, Right-of-Way Grants (and/or Temporary Use or Special Use Permits), WY, UT, NV, and OR.

Summary: EPA expressed environmental concerns about impacts to perennial waters, wetlands, and impacts related to hydrostatic pipeline testing. Rating EC2.

EIS No. 20090267, ERP No. D–AFS–J65546–MT, Bitterroot National Forest Travel Management Planning, To Address Conflicts between Motorized and Non-Motorized Users, Ravalli County, MT.

Summary: EPA expressed environmental concerns about impacts to watersheds and other resources. Rating EC2.

EIS No. 20090424, ERP No. D–USN–L11043–AK, Gulf of Alaska Navy Training Activities, Proposal to Support and Conduct Current, Emerging, and Future Training Activities, Implementation, Gulf of Alaska, AK.

Summary: EPA expressed environmental concerns about impacts to the marine environment from the deposition of expended training materials. Rating EC2.

EIS No. 20090211, ERP No. DS–AFS–J61114–CO, Vail Ski Area's 2007 Improvement Project, Proposed On-Mountain Restaurant from the top of Vail Mountain to Mid Vail, Special-Use-Permit, Eagle/Holy Cross Ranger District, White River National Forest, Eagle County, CO.

Summary: No formal comment letter was sent to the preparing agency. Rating NC.

Final EISs

EIS No. 20090224, ERP No. F–AFS–J65531–SD, Telegraph Project Area, Proposes to Implement Multiple Resource Management Actions, Northern Hills Ranger District, Black Hills National Forest, Lawrence and Pennington Counties, SD.

Summary: EPA continues to have environmental concerns about the need to develop a project level adaptive management plan.

EIS No. 20090406, ERP No. F–AFS–K65350–CA, Modoc National Forest Motorized Travel Management Plan, Implementation, National Forest Transportation System (NFTS), Modoc, Lassen and Siskiyou Counties, CA.

Summary: EPA continues to have environmental concerns about vernal pool and wet meadow impacts.

EIS No. 20090427, ERP No. F–NPS–F60009–MN, Disposition of Bureau of Mines Property, Twin Cities Research Center Main Campus, Implementation, Hennepin County, MN.

Summary: EPA commends the National Park Service for selecting the environmentally preferred alternative, and recommends that the Record of Decision clarify the future status of key cultural resources on site.

EIS No. 20090440, ERP No. F–AFS–J61114–CO, Vail Ski Area's 2007 Improvement Project, Proposed On-Mountain Restaurant from the top of Vail Mountain to Mid Vail, Special-Use-Permit, Eagle/Holy Cross Ranger District, White River National Forest, Eagle County, CO.

Summary: EPA does not object to the proposed action.

EIS No. 20090446, ERP No. F–AFS–K65373–NV, Jarbidge Ranger District Rangeland Management Project, Proposed Reauthorizing Grazing on 21 Existing Grazing Allotments, Humboldt Toiyabe National Forest, Elko County, NV.

Summary: EPA's previous concerns have been resolved; therefore, EPA does not object to the proposed action.

EIS No. 20090449, ERP No. F–AFS–F65076–MI, Niagara Project, To Address Site-Specific Vegetation and Transportation System Needs in the Project Areas, Hiawatha National Forest, St. Ignace and Sault Ste. Marie Ranger Districts, Mackinac and Chippewa Counties, MI.

Summary: EPA does not object to the proposed project.

Dated: February 2, 2010.

Robert W. Hargrove,

Director, NEPA Compliance Division, Office of Federal Activities.

[FR Doc. 2010–2572 Filed 2–4–10; 8:45 am]

BILLING CODE 6560–50–P

ENVIRONMENTAL PROTECTION AGENCY

[ER–FRL–8987–9]

Environmental Impact Statements; Notice of Availability

Responsible Agency: Office of Federal Activities, General Information (202) 564–1399 or *http://www.epa.gov/compliance/nepa/.*

Weekly receipt of Environmental Impact Statements

Filed 01/25/2010 through 01/29/2010

Pursuant to 40 CFR 1506.9.

Notice

In accordance with Section 309(a) of the Clean Air Act, EPA is required to make its comments on EISs issued by other Federal agencies public. Historically, EPA has met this mandate by publishing weekly notices of availability of EPA comments, which include a brief summary of EPA's comment letters, in the **Federal Register.** Since February 2008, EPA has been including its comment letters on EISs on its Web site at: *http://www.epa.gov/compliance/nepa/eisdata.html.* Including the entire EIS comment letters on the Web site satisfies the Section 309(a) requirement to make EPA's comments on EISs available to the public. Accordingly, after March 31, 2010, EPA will discontinue the publication of this notice of availability of EPA comments in the **Federal Register.**

EIS No. 20100024, Third Draft Supplement, USFS, 00, Southwest Idaho Ecogroup Land and Resource Management Plan, Updated Information to Reanalyze the Effects of Current and Proposed Management on Rock Mountain Bighorn Sheep Viability in the Payette National Forest 2003 FEIS, Boise National Forest, Payette National Forest and Sawtooth National Forest, Forest Plan Revision, Implementation, Several Counties, ID; Malhaur County, OR and Box Elder County, UT, Comment Period Ends: 03/22/2010, Contact: Pattie Sourcek 208–634–0700.

EIS No. 20100025, Final EIS, USACE, NC, North Topsail Beach Shoreline Protection Project, Seeking Federal and State Permits to Allow Implementation of a Non-Federal Shoreline and Inlet Management Project, New River Inlet, Onslow County, NC, Wait Period Ends: 03/08/2010, Contact: Mickey Sugg 910–251–4811.

EIS No. 20100026, Final EIS, NOAA, 00, Amendment 31 to the Fishery Management Plan for Reef Fish Resources, Addresses Bycatch of Sea Turtles in the Bottom Longline Component of the Reef Fish Fishery, Gulf of Mexico, Wait Period Ends: 03/08/2010, Contact: Roy E. Crabtree 727–824–5701.

EIS No. 20100027, Draft EIS, USFS, CA, Big Grizzly Fuels Reduction and Forest Health Project, Proposes

Vegetation Treatments, Eldorado National Forest, Georgetown Ranger District, Georgetown, CA, Comment Period Ends: 03/22/2010, Contact: Dana Walsh 530–333–5558.

EIS No. 20100028, Draft Supplement, USFS, WY, Bridger-Teton National Forest, Proposal to Determine What Terms and Conditions to Allow Development of Oil and Gas Leasing in the Wyoming Range, Sublette County, WY, Comment Period Ends: 03/22/2010, Contact: Melissa Blackwell 801–625–5777.

EIS No. 20100029, Draft EIS, BR, WA, Cle Elum Dam Fish Passage Facilities and Fish Reintroduction Project, To Restore Connectivity, Biodiversity, and Natural Production of Anadromous Salmonids, Kittitas County, WA, Comment Period Ends: 03/22/2010, Contact: Jennifer Beardsley 208–378–5035.

EIS No. 20100030, Draft EIS, WAPA, SD, Deer Creek Station Energy Facility Project, Proposed 300-megawatt (MW) Natural Gas-Fired Generation Facility, Brookings County, SD, Comment Period Ends: 03/22/2010, Contact: Matt Marsh 406–247–7385.

EIS No. 20100031, Draft EIS, NRC, WI, GENERIC—License Renewal of Nuclear Plants for Kewaunee Power Station, Supplement 40 to NUREG–1437, Kewaunee County, WI, Comment Period Ends: 04/23/2010, Contact: Vanice Perin 301–415–8143.

EIS No. 20100032, Final EIS, WAPA, CA, ADOPTION—Delta-Mendota Canal/California Aqueduct Intertie Project, Construction and Operation of a Pumping Plant and Pipeline Connection, San Luis Delta-Mendota Water Authority Project, Central Valley Project, Alameda and San Joaquin Counties, CA, Contact: Steve Tuggle 916–353–4549. The U.S. Department of Energy's Western Area Power Administrations (DOE/WAPA) has ADOPTED the U.S. Department of Interior, Bureau of Reclamations FEIS #20090401, filed on 11/19/2009. DOE/WAPA was a Cooperating Agency for the above project. Recirculation of the FEIS is not necessary under 40 CFR 1506.3(c).

Amended Notices

EIS No. 20100016, Draft EIS, USN, CA, Silver Strand Training Complex (SSTC) Project, Proposed Naval Training Activities, Cities of Coronado and Imperial Beach, San Diego County, CA, Comment Period Ends: 03/08/2010, Contact: Kent Randall 619–545–9339, Revision to FR Published 01/22/2010: Correction to Contact Phone Number.

EIS No. 20090435, Draft EIS, APHIS, 00, Glyphosate-Tolerant Alfalfa Events J101 and J163: Request for Nonregulated Status, Implementation, United States, Comment Period Ends: 03/03/2010, Contact: Cindy Eck 202–720–2600, Revision to FR Published 12/18/2009: Extending Comment Period From 02/16/2010 to 03/03/2010.

Dated: February 2, 2010.

Robert W. Hargrove,

Director, NEPA Compliance Division, Office of Federal Activities.

[FR Doc. 2010–2537 Filed 2–4–10; 8:45 am]

BILLING CODE 6560–50–P

ENVIRONMENTAL PROTECTION AGENCY

[EPA–HQ–OPP–2009–1016; FRL–8809–1]

Pesticide Experimental Use Permit; Receipt of Application; Comment Request

AGENCY: Environmental Protection Agency (EPA).

ACTION: Notice.

SUMMARY: This notice announces EPA's receipt of an application 62097–EUP–R from Fine Agrochemicals Ltd. requesting an experimental use permit (EUP) for the end-use product FAL 1800, containing the new biochemical pesticide Prohydrojasmon (PDJ). The Agency has determined that the permit may be of regional and national significance. Therefore, in accordance with 40 CFR 172.11(a), the Agency is soliciting comments on this application.

DATES: Comments must be received on or before March 8, 2010.

ADDRESSES: Submit your comments, identified by docket identification (ID) number EPA–HQ–OPP–2009–1016, by one of the following methods:

- *Federal eRulemaking Portal*: *http://www.regulations.gov*. Follow the on-line instructions for submitting comments.
- *Mail*: Office of Pesticide Programs (OPP) Regulatory Public Docket (7502P), Environmental Protection Agency, 1200 Pennsylvania Ave., NW., Washington, DC 20460–0001.
- *Delivery*: OPP Regulatory Public Docket (7502P), Environmental Protection Agency, Rm. S–4400, One Potomac Yard (South Bldg.), 2777 S. Crystal Dr., Arlington,VA. Deliveries are only accepted during the Docket Facility's normal hours of operation (8:30 a.m. to 4 p.m., Monday through Friday, excluding legal holidays). Special arrangements should be made for deliveries of boxed information. The Docket Facility telephone number is (703) 305–5805.

Instructions: Direct your comments to docket ID number EPA–HQ–OPP–2009–1016. EPA's policy is that all comments received will be included in the docket without change and may be made available on-line at *http://www.regulations.gov*, including any personal information provided, unless the comment includes information claimed to be Confidential Business Information (CBI) or other information whose disclosure is restricted by statute. Do not submit information that you consider to be CBI or otherwise protected through regulations.gov or e-mail. The regulations.gov website is an "anonymous access" system, which means EPA will not know your identity or contact information unless you provide it in the body of your comment. If you send an e-mail comment directly to EPA without going through regulations.gov, your e-mail address will be automatically captured and included as part of the comment that is placed in the docket and made available on the Internet. If you submit an electronic comment, EPA recommends that you include your name and other contact information in the body of your comment and with any disk or CD-ROM you submit. If EPA cannot read your comment due to technical difficulties and cannot contact you for clarification, EPA may not be able to consider your comment. Electronic files should avoid the use of special characters, any form of encryption, and be free of any defects or viruses.

Docket: All documents in the docket are listed in the docket index available at *http://www.regulations.gov*. Although listed in the index, some information is not publicly available, e.g., CBI or other information whose disclosure is restricted by statute. Certain other material, such as copyrighted material, is not placed on the Internet and will be publicly available only in hard copy form. Publicly available docket materials are available either in the electronic docket at *http://www.regulations.gov*, or, if only available in hard copy, at the OPP Regulatory Public Docket in Rm. S–4400, One Potomac Yard (South Bldg.), 2777 S. Crystal Dr., Arlington, VA. The hours of operation of this Docket Facility are from 8:30 a.m. to 4 p.m., Monday through Friday, excluding legal holidays. The Docket Facility telephone number is (703) 305–5805.

FOR FURTHER INFORMATION CONTACT: Gina Casciano, Biopesticides and Pollution Prevention Division (7511P), Office of Pesticide Programs, Environmental

Protection Agency, 1200 Pennsylvania Ave., NW., Washington, DC 20460–0001; telephone number: (703) 605–0513; e-mail address: *casciano.gina@epa.gov*.

SUPPLEMENTARY INFORMATION:

I. General Information

A. Does this Action Apply to Me?

This action is directed to the public in general. This action may, however, be of interest to those persons who are or may be required to conduct testing of chemical substances under the Federal Food, Drug, and Cosmetic Act (FFDCA) or the Federal Insecticide, Fungicide, and Rodenticide Act (FIFRA). Since other entities may also be interested, the Agency has not attempted to describe all the specific entities that may be affected by this action. If you have any questions regarding the applicability of this action to a particular entity, consult the person listed under **FOR FURTHER INFORMATION CONTACT**.

B. What Should I Consider as I Prepare My Comments for EPA?

1. *Submitting CBI*. Do not submit this information to EPA through regulations.gov or e-mail. Clearly mark the part or all of the information that you claim to be CBI. For CBI information in a disk or CD-ROM that you mail to EPA, mark the outside of the disk or CD-ROM as CBI and then identify electronically within the disk or CD-ROM the specific information that is claimed as CBI. In addition to one complete version of the comment that includes information claimed as CBI, a copy of the comment that does not contain the information claimed as CBI must be submitted for inclusion in the public docket. Information so marked will not be disclosed except in accordance with procedures set forth in 40 CFR part 2.

2. *Tips for preparing your comments*. When submitting comments, remember to:

i. Identify the document by docket ID number and other identifying information (subject heading, **Federal Register** date and page number).

ii. Follow directions. The Agency may ask you to respond to specific questions or organize comments by referencing a Code of Federal Regulations (CFR) part or section number.

iii. Explain why you agree or disagree; suggest alternatives and substitute language for your requested changes.

iv. Describe any assumptions and provide any technical information and/or data that you used.

v. If you estimate potential costs or burdens, explain how you arrived at your estimate in sufficient detail to allow for it to be reproduced.

vi. Provide specific examples to illustrate your concerns and suggest alternatives.

vii. Explain your views as clearly as possible, avoiding the use of profanity or personal threats.

viii. Make sure to submit your comments by the comment period deadline identified.

3. *Environmental justice*. EPA seeks to achieve environmental justice, the fair treatment and meaningful involvement of any group, including minority and/or low income populations, in the development, implementation, and enforcement of environmental laws, regulations, and policies. To help address potential environmental justice issues, the Agency seeks information on any groups or segments of the population who, as a result of their location, cultural practices, or other factors, may have atypical or disproportionately high and adverse human health impacts or environmental effects from exposure to the pesticide(s) discussed in this document, compared to the general population.

II. What Action is the Agency Taking?

Under section 5 of FIFRA, 7 U.S.C. 136c, EPA can allow manufacturers to field test pesticides under development. Manufacturers are required to obtain an EUP before testing new pesticides or new uses of pesticides if they conduct experimental field tests on 10 acres or more of land or one acre or more of water.

Pursuant to 40 CFR 172.11(a), the Agency has determined that the following EUP application may be of regional and national significance, and therefore is seeking public comment on the EUP application:

Submitter: Fine Agrochemicals Ltd., (62097–EUP–R).

Pesticide Chemical: Prohydrojasmon (PDJ).

Summary of Request: Use as a plant growth regulator on red apple varieties in the states of California, Maryland, Michigan, New York, North Carolina, Oregon, Pennsylvania, Virginia, Washington, and West Virginia.

A copy of the application and any information submitted is available for public review in the docket established for this EUP application as described under **ADDRESSES**.

Following the review of the application and any comments and data received in response to this solicitation, EPA will decide whether to issue or deny the EUP request, and if issued, the conditions under which it is to be conducted. Any issuance of an EUP will be announced in the **Federal Register**.

List of Subjects

Environmental protection, Experimental use permits.

Dated: January 25, 2010.

Keith A. Matthews,

Acting Director, Biopesticides and Pollution Prevention Division, Office of Pesticide Programs.

[FR Doc. 2010–2383 Filed 2–4–??; 8:45 am]

BILLING CODE 6560–50–S

ENVIRONMENTAL PROTECTION AGENCY

[FRL–9110–6]

Notice of a Project Waiver of Section 1605 (Buy American Requirement) of the American Recovery and Reinvestment Act of 2009 (ARRA) to the City of LaSalle, IL (LaSalle)

AGENCY: Environmental Protection Agency (EPA).

ACTION: Notice.

SUMMARY: The EPA is hereby granting a project waiver of the Buy American requirements of ARRA Section 1605 under the authority of Section 1605(b)(2) [manufactured goods are not produced in the United States of a satisfactory quality] to LaSalle for the purchase of membrane bioreactor (MBR) membrane racks, which include the hollow fiber membrane modules and the associated proprietary mechanical equipment to secure the membranes in the tank. This is a project-specific waiver and only applies to the use of the specified product for the ARRA funded project being proposed. Any other ARRA project that may wish to use the same product must apply for a separate waiver based on project-specific circumstances. These hollow fiber membrane racks, which are supplied by Siemens Water Technologies Corporation, are manufactured in Australia and China, and meet LaSalle's performance specifications and requirements. The Acting Regional Administrator is making this determination based on the review and recommendations of EPA Region 5's Water Division. LaSalle has provided sufficient documentation to support its request, as detailed below. The Assistant Administrator of the Office of Administration and Resources Management has concurred on this decision to make an exception to Section 1605 of ARRA. This action permits the purchase of hollow fiber membrane racks for LaSalle's "East Side

Regional Wastewater Treatment Facility Project" that may otherwise be prohibited under Section 1605(a) of the ARRA.

DATES: *Effective Date:* January 7, 2010.

FOR FURTHER INFORMATION CONTACT: Julie Henning, SRF Financial Analyst (312) 886–4882, or Puja Lakhani, Regional Counsel, (312) 353–3190, U.S. EPA Region 5, 77 W. Jackson Blvd., Chicago, IL 60613.

SUPPLEMENTARY INFORMATION: In accordance with ARRA Section 1605(c) and pursuant to Section 1605(b)(2) of Public Law 111–5, Buy American requirements, EPA hereby provides notice that it is granting a project waiver to LaSalle for the acquisition of hollow fiber membrane racks which are manufactured in Australia and China. The manufacturer is Siemens Water Technologies Corporation.

Section 1605 of the ARRA requires that none of the appropriated funds may be used for the construction, alteration, maintenance, or repair of a public building or public work unless all of the iron, steel, and manufactured goods used in the project are produced in the United States, or unless a waiver is provided to the recipient by the head of the appropriate agency, here EPA. A waiver may be provided if EPA determines that (1) Applying these requirements would be inconsistent with the public interest; (2) iron, steel, and the relevant manufactured goods are not produced in the United States in sufficient and reasonably available quantities and of a satisfactory quality; or (3) inclusion of iron, steel, and the relevant manufactured goods produced in the United States will increase the cost of the overall project by more than 25 percent.

LaSalle proposes to construct a new 0.50 million gallons per day (MGD) wastewater treatment plant. The plant is designed based upon membrane bioreactor (MBR) technology. The MBR technology will produce effluent which has superior quality than conventional secondary or tertiary treatment facilities. The superior effluent quality afforded by the MBR technology was necessary for this project due to the characteristics of the receiving stream, the Little Vermilion River. The segment of the Little Vermilion River into which the proposed wastewater treatment plant will discharge is on the list of impaired waters set forth in Section 303(d) of the Federal Clean Water Act and the Water Quality Planning and Management regulation at 40 CFR Part 130. The segment has been listed with the designated use of aquatic life as impaired by potential pollutants including total nitrogen, pH, total phosphorus, total suspended solids, zinc and fecal coliform. The MBR technology proved to be the cost-effective alternative for achieving effluent of sufficient quality with regard to the pollutants that are the potential source of impairment that would be required in order to obtain a National Pollutant Discharge Elimination System (NPDES) permit for a new discharge into the 303(d)-listed receiving stream (Little Vermilion River).

During the bidding phase of the project, LaSalle received proposals from three MBR equipment manufacturers, of which Siemens Water Technologies Corporation was selected. None of the three equipment manufacturers produces the hollow fiber membrane rack components of the MBR systems within the U.S. LaSalle stated in the waiver application that based on information gathered during the planning and early design stages of the project, including their contact with contractors and equipment suppliers during the bidding phase of the project, to the best of their knowledge at the time of equipment selection and design, they could not identify any other reputable membrane system for wastewater treatment applications that was currently manufactured in the United States and available to meet LaSalle's technical specifications and design requirements.

The April 28, 2009 EPA HQ Memorandum, "Implementation of Buy American provisions of P.L. 111–5, the 'American Recovery and Reinvestment Act of 2009'," defines *reasonably available quantity* as "the quantity of iron, steel, or relevant manufactured good is available or will be available at the time needed and place needed, and in the proper form or specification as specified in the project plans and design."

EPA's national engineering contractor prepared a technical assessment report dated September 29, 2009, based on the submitted waiver request, identifying one potential domestic manufacturer of membrane racks which appeared to have the potential to meet LaSalle's performance criteria and specifications. Subsequent analysis by EPA and the national contractor, however, concluded that the potential domestic manufacturer only produces modules with flat plate membranes. LaSalle's project design plans specify that hollow fiber configured modules are required, and discussions with both EPA's national engineering contractors and LaSalle confirmed that the use of flat plate membranes would require re-designing major portions of the project, including the membrane bioreactor basins, process inlet and outlet piping, filtrate pumping system, recycle pumping system, air scour blowers and air piping system, chemical cleaning system, and other features. The re-design would involve major changes to the basin concrete structures, masonry building enclosure, piping and mechanical systems, electrical/controls systems, and access platforms. Therefore, the potential domestic manufacturer does not provide the required hollow fiber membrane racks in sufficient and reasonably available quantities and of a satisfactory quality to meet the design specifications. EPA's national contractor's technical assessment report from September 29, 2009, did not find any additional domestic manufacturers of the specified manufactured good.

The purpose of the ARRA is to stimulate economic recovery in part by funding current infrastructure construction, not to delay projects that are "shovel ready" by requiring communities such as Auburn to revise their standards and specifications and to start the bidding process again. The imposition of ARRA Buy American requirements on such projects otherwise eligible for ARRA State Revolving Fund assistance would result in unreasonable delay and thus displace the "shovel ready" status for this project. To further delay project implementation is in direct conflict with a fundamental economic purpose of the ARRA, which is to create or retain jobs.

The State and Tribal Programs Branch has reviewed this waiver request and has determined that the supporting documentation provided by LaSalle is sufficient to meet the criteria listed under Section 1605(b) of the ARRA and in the April 28, 2009, "Implementation of Buy American provisions of Public Law 111–5, the 'American Recovery and Reinvestment Act of 2009' Memorandum": Iron, steel, and the manufactured goods are not produced in the United States in sufficient and reasonably available quantities and of a satisfactory quality. The basis for this project waiver is the authorization provided in Section 1605(b)(2) of the ARRA. Due to the lack of production of this product in the United States in sufficient and reasonably available quantities and of a satisfactory quality in order to meet LaSalle's performance specifications and requirements, a waiver from the Buy American requirement is justified.

The March 31, 2009 Delegation of Authority Memorandum provided Regional Administrators with the authority to issue exceptions to Section

1605 of the ARRA within the geographic boundaries of their respective regions and with respect to requests by individual grant recipients. Having established both a proper basis to specify the particular good required for this project, and that this manufactured good was not available from a producer in the United States, LaSalle is hereby granted a waiver from the Buy American requirements of Section 1605(a) of Public Law 111–5 for the purchase of the MBR membrane racks using ARRA funds as specified in the community's request of September 10, 2009. This supplementary information constitutes the detailed written justification required by Section 1605(c) for waivers "based on a finding under subsection (b)."

Authority: Pub. L. 111–5, section 1605.

Dated: January 7, 2010.

Bharat Mathur,

Acting Regional Administrator, Region 5.

[FR Doc. 2010–2541 Filed 2–4–10; 8:45 am]

BILLING CODE 6560–50–P

ENVIRONMENTAL PROTECTION AGENCY

[FRL–9110–9]

EPA Science Advisory Board Staff Office Request for Nominations of Experts for the SAB Lead (Pb) Review Panel

AGENCY: Environmental Protection Agency (EPA).

ACTION: Notice; Request for Nominations.

SUMMARY: The Science Advisory Board (SAB) Staff Office is requesting public nominations of experts to form an SAB *Ad Hoc* Panel to review EPA's draft technical analyses which will be used to support the development of lead-based paint dust hazard standards and lead-safe work practice standards.

DATES: Nominations should be submitted by February 26, 2010 per instructions below.

FOR FURTHER INFORMATION CONTACT: Any member of the public wishing further information regarding this Request for Nominations may contact Mr. Aaron Yeow, Designated Federal Officer (DFO), SAB Staff Office, by telephone/voice mail at (202) 343–9878; by fax at (202) 233–0643; or via e-mail at *yeow.aaron@epa.gov*. General information concerning the EPA Science Advisory Board can be found on the EPA SAB Web site at *http://www.epa.gov/sab*.

SUPPLEMENTARY INFORMATION:

Background: Human exposure to lead may cause a variety of adverse health effects, particularly in children. EPA's Office of Pollution Prevention and Toxics (OPPT) regulates toxic substances, such as lead, through the Toxic Substances Control Act (TSCA). In 2001, EPA established standards for lead-based paint hazards, which include lead in residential dust. OPPT is developing draft technical analyses that will be used to support: (a) Possible revision of existing residential lead-based paint dust hazard standards, (b) the development of new lead-based paint dust hazard standards for public and commercial buildings, and (c) the development of lead-safe work practice standards for renovations of public and commercial buildings. OPPT has requested that the SAB conduct a review of these draft technical analyses.

The SAB was established by 42 U.S.C. 4365 to provide independent scientific and technical advice, consultation and recommendations to the EPA Administrator on the technical basis for Agency positions and regulations. The SAB Staff Office will form an expert Panel to review OPPT's draft technical analyses. The SAB Panel will comply with the provisions of the Federal Advisory Committee Act (FACA) and all appropriate SAB procedural policies. Upon completion, the Panel's report will be submitted to the chartered SAB for final approval for transmittal to the EPA Administrator. The SAB Lead Review Panel is being asked to comment on the scientific soundness of the Agency's draft technical analyses.

Availability of the Review Materials: The EPA draft technical analyses to be reviewed by the SAB Panel will be made available on the SAB Web site. For questions concerning the review materials, please contact Dr. Jennifer Seed, at (202) 564–7634, or *seed.jennifer@epa.gov.*

Request for Nominations: The SAB Staff Office is requesting nominations of nationally recognized experts with expertise in one or more of the following areas, particularly with respect to lead: dust transport, exposure assessment, epidemiology, general toxicology, neurotoxicology, pediatrics, biokinetic modeling, biostatistics, and risk assessment.

Process and Deadline for Submitting Nominations: Any interested person or organization may nominate qualified individuals for possible service on the SAB Review Panel in the areas of expertise described above. Nominations should be submitted in electronic format (which is preferred over hard copy) following the instructions for "Nominating Experts to Advisory Panels and Ad Hoc Committees Being Formed" provided on the SAB Web site. The instructions can be accessed through the "Nomination of Experts" link on the blue navigational bar on the SAB Web site at *http://www.epa.gov/sab*. To receive full consideration, nominations should include all of the information requested.

EPA's SAB Staff Office requests: Contact information about the person making the nomination; contact information about the nominee; the disciplinary and specific areas of expertise of the nominee; the nominee's curriculum vitae; sources of recent grants and/or contracts; and a biographical sketch of the nominee indicating current position, educational background, research activities, and recent service on other national advisory committees or national professional organizations.

Persons having questions about the nomination procedures, or who are unable to submit nominations through the SAB Web site, should contact Mr. Aaron Yeow, DFO, as indicated above in this notice. Nominations should be submitted in time to arrive no later than February 26, 2010. EPA values and welcomes diversity. In an effort to obtain nominations of diverse candidates, EPA encourages nominations of women and men of all racial and ethnic groups.

The EPA SAB Staff Office will acknowledge receipt of nominations. The names and biosketches of qualified nominees identified by respondents to the **Federal Register** notice and additional experts identified by the SAB Staff will be posted on the SAB Web site at *http://www.epa.gov/sab*. Public comments on this list of candidates will be accepted for 21 calendar days. The public will be requested to provide relevant information or other documentation on nominees that the SAB Staff Office should consider in evaluating candidates.

For the EPA SAB Staff Office, a balanced subcommittee or review panel includes candidates who possess the necessary domains of knowledge, the relevant scientific perspectives (which, among other factors, can be influenced by work history and affiliation), and the collective breadth of experience to adequately address the charge. In establishing the SAB Panel, the SAB Staff Office will consider public comments on the list of candidates, information provided by the candidates themselves, and background information independently gathered by the SAB Staff Office. Selection criteria to be used for Panel membership include: (a) Scientific and/or technical

expertise, knowledge and experience (primary factors); (b) availability and willingness to serve; (c) absence of financial conflicts of interest; (d) absence of an appearance of a lack of impartiality; (e) skills working on committees, subcommittees and advisory panels for the Panel as a whole; and (f) diversity and balance among scientific expertise and viewpoints.

The SAB Staff Office's evaluation of an absence of financial conflicts of interest will include a review of the "Confidential Financial Disclosure Form for Special Government Employees Serving on Federal Advisory Committees at the U.S. Environmental Protection Agency" (EPA Form 3110–48). This confidential form allows Government officials to determine whether there is a statutory conflict between that person's public responsibilities (which includes membership on an EPA Federal advisory committee) and private interests and activities, or the appearance of a lack of impartiality, as defined by Federal regulation. The form may be viewed and downloaded from the following URL address *http://www.epa.gov/sab/pdf/epaform3110-48.pdf*.

The approved policy under which the EPA SAB Office selects subcommittees and review panels is described in the following document: *Overview of the Panel Formation Process at the Environmental Protection Agency Science Advisory Board* (EPA–SAB–EC–02–010), which is posted on the SAB Web site at *http://www.epa.gov/sab/pdf/ec02010.pdf.*

Dated January 28, 2010.

Anthony F. Maciorowski,

Deputy Director, EPA Science Advisory Board Staff Office.

[FR Doc. 2010–2535 Filed 2–4–10; 8:45 am]

BILLING CODE 6560–50–P

ENVIRONMENTAL PROTECTION AGENCY

[EPA–HQ–OPP–2009-0889; FRL–8811–9]

Policy Paper on Revised Risk Assessment Methods for Workers, Children of Workers in Agricultural Fields, and Pesticides with No Food Uses; Extension of Comment Period

AGENCY: Environmental Protection Agency (EPA).

ACTION: Notice; extension of comment period.

SUMMARY: EPA issued a notice in the **Federal Register** of December 9, 2009, making available for comment a policy paper entitled "Revised Risk Assessment Methods for Workers, Children of Workers in Agricultural Fields, and Pesticides with No Food Uses," that describes how the Agency plans to use revised methods in conducting risk assessments for pesticide uses and exposures not governed by the Federal Food, Drug, and Cosmetic Act (FFDCA). Implementing this policy will increase protections, especially for agricultural workers and children of workers in agricultural fields. The December 9, 2009 notice announced the availability of the policy paper and opened a public comment period of 60 days (until February 8, 2010). Today's notice extends the comment period for an additional 60 days, from February 8, 2010, to April 12, 2010.

DATES: Comments, identified by docket identification (ID) number EPA–HQ–OPP–2009-0889, must be received on or before April 12, 2010.

ADDRESSES: Follow the detailed instructions as provided under **ADDRESSES** in the **Federal Register** document of December 9, 2009.

FOR FURTHER INFORMATION CONTACT: Deborah Smegal, Health Effects Division, Office of Pesticide Programs, Environmental Protection Agency, 1200 Pennsylvania Ave., NW., Washington, DC 20460–0001; telephone number: (703) 308–0175; e-mail address: *smegal.deborah@epa.gov*.

SUPPLEMENTARY INFORMATION: This document extends the public comment period established in the **Federal Register** of December 9, 2009 (74 FR 65121) (FRL–8803–2). In that document, a comment period of 60 days was established. Subsequent to publication, a number of stakeholders requested the extension of the original comment period, citing the far-reaching implications of the policy and its relationship to several other key Agency initiatives that are currently under development and available for comment. EPA is hereby extending the comment period, which was set to end on February 8, 2010, to April 12, 2010.

To submit comments, or access the docket, please follow the detailed instructions as provided under **ADDRESSES** in the December 9, 2009 **Federal Register** document. If you have questions, consult the person listed under **FOR FURTHER INFORMATION CONTACT**.

List of Subjects

Environmental protection, Pesticides and pests.

Dated: January 29, 2010.

Steven Bradbury,

Director, Office of Pesticide Programs.

[FR Doc. 2010–2400 Filed 2–4–10; 8:45 am]

BILLING CODE 6560–50–S

FEDERAL COMMUNICATIONS COMMISSION

Federal Advisory Committee Act; Advisory Committee on Diversity for Communications in the Digital Age

AGENCY: Federal Communications Commission.

ACTION: Notice of public meeting.

SUMMARY: In accordance with the Federal Advisory Committee Act, this notice advises interested persons that the Federal Communications Commission's (FCC) Advisory Committee on Diversity for Communications in the Digital Age ("Diversity Committee") will hold a meeting on Wednesday, March 24, 2010 at 2 p.m. in the Commission Meeting Room of the Federal Communications Commission, Room TW–C305, 445 12th Street, SW., Washington, DC 20554. This will be the fourth meeting of the full Diversity Committee under its renewed charter and new membership.

DATES: March 24, 2010.

ADDRESSES: Federal Communications Commission, Room TW–C305 (Commission Meeting Room), 445 12th Street, SW., Washington, DC 20554.

FOR FURTHER INFORMATION CONTACT: Barbara Kreisman, 202–418–1605; *Barbara.Kreisman@FCC.gov.*

SUPPLEMENTARY INFORMATION: At this meeting the Constitutional, Broadband and Media Issues working groups will present best practices recommendations.

Members of the general public may attend the meeting. The FCC will attempt to accommodate as many people as possible. However, admittance will be limited to seating availability. The public may submit written comments before the meeting to: Barbara Kreisman, the FCC's Designated Federal Officer for the Diversity Committee by e-mail: *Barbara.Kreisman@fcc.gov* or U.S. Postal Service Mail (Barbara Kreisman, Federal Communications Commission, Room 2–A665, 445 12th Street, SW., Washington, DC 20554).

Open captioning will be provided for this event. Other reasonable accommodations for people with disabilities are available upon request. Requests for such accommodations should be submitted via e-mail to *fcc504@fcc.gov* or by calling the

Consumer & Governmental Affairs Bureau at (202) 418–0530 (voice), (202) 418–0432 (tty). Such requests should include a detailed description of the accommodation needed. In addition, please include a way we can contact you if we need more information. Please allow at least five days advance notice; last minute requests will be accepted, but may be impossible to fill.

Additional information regarding the Diversity Committee can be found at *http://www.fcc.gov/DiversityFAC.*

Federal Communications Commission.

Barbara A. Kreisman,

Chief, Video Division, Media Bureau.

[FR Doc. 2010–2540 Filed 2–4–10; 8:45 am]

BILLING CODE 6712–01–P

FEDERAL MARITIME COMMISSION

Notice of Agreement Filed

The Commission hereby gives notice of the filing of the following agreement under the Shipping Act of 1984. Interested parties may submit comments on the agreement to the Secretary, Federal Maritime Commission, Washington, DC 20573, within ten days of the date this notice appears in the **Federal Register**. A copy of the agreement is available through the Commission's Web site (*www.fmc.gov*) or by contacting the Office of Agreements at (202) 523–5793 or *tradeanalysis@fmc.gov*.

Agreement No.: 011966–002.

Title: West Coast USA-Mexico & Canada Vessel Sharing Agreement.

Parties: Compania Sud Americana de Vapores S.A.; Hamburg Süd; and Compania Chilena de Navegacion Interoceania, S.A.

Filing Party: Wayne R. Rohde, Esq.; Sher & Blackwell LLP; 1850 M Street, NW.; Suite 900; Washington, DC 20036.

Synopsis: The amendment would add Guatemala, Panama and the Caribbean Coast of Colombia to the geographic scope of the Agreement, increase the number of vessels used under the agreement, and revise the space allocations of the parties. Parties request expedited review.

By Order of the Federal Maritime Commission.

Dated: February 2, 2010.

Karen V. Gregory,

Secretary.

[FR Doc. 2010–2566 Filed 2–4–10; 8:45 am]

BILLING CODE P

GENERAL SERVICES ADMINISTRATION

[OMB Control No. 3090–0278]

National Contact Center; Submission for OMB Review; National Contact Center Customer Evaluation Survey

AGENCY: Citizen Services and Communications, Federal Consumer Information Center, GSA.

ACTION: Notice of request for comments regarding a renewal to an existing OMB clearance.

SUMMARY: Under the provisions of the Paperwork Reduction Act of 1995 (44 U.S.C. Chapter 35), the General Services Administration will be submitting to the Office of Management and Budget (OMB) a request to review and approve a renewal of a previously approved information collection requirement regarding the National Contact Center customer evaluation survey. A request for public comments was published in the **Federal Register** at 74 FR 59981, on November 19, 2009. No comments were received.

Public comments are particularly invited on: Whether this collection of information is necessary and whether it will have practical utility; whether our estimate of the public burden of this collection of information is accurate and based on valid assumptions and methodology; and ways to enhance the quality, utility, and clarity of the information to be collected.

DATES: Submit comments on or before: March 8, 2010.

ADDRESSES: Submit comments regarding this burden estimate or any other aspect of this collection of information, including suggestions for reducing this burden to GSA Desk Officer, OMB, Room 10236, NEOB, Washington, DC 20503, and a copy to the Regulatory Secretariat (MVPR), General Services Administration, Room 4041, 1800 F Street, NW., Washington, DC 20405. Please cite OMB Control No. 3090–0278, National Contact Center Customer Evaluation Survey, in all correspondence.

FOR FURTHER INFORMATION CONTACT: Tonya Beres, Federal Information Specialist, Office of Citizen Services and Communications, at telephone (202) 501–1803 or via e-mail to *tonya.beres@gsa.gov.*

SUPPLEMENTARY INFORMATION:

A. Purpose

This information collection will be used to assess the public's satisfaction with the National Contact Center service, to assist in increasing the efficiency in responding to the public's need for Federal information, and to assess the effectiveness of marketing efforts.

B. Annual Reporting Burden

Respondents: 4,200.

Responses per Respondent: 1.

Hours per Response: .05 (3 minutes) for phone survey and .06 (4 minutes) for email survey.

Total Burden Hours: 270.

Obtaining Copies of Proposals: Requesters may obtain a copy of the information collection documents from the General Services Administration, Regulatory Secretariat (MVPR), 1800 F Street, NW., Room 4041, Washington, DC 20405, telephone (202) 501–4755. Please cite OMB Control No. 3090–0278, National Contact Center Customer Evaluation Survey, in all correspondence.

Dated: January 26, 2010.

Casey Coleman,

Chief Information Officer.

[FR Doc. 2010–2495 Filed 2–4–10; 8:45 am]

BILLING CODE 6820–CX–P

GENERAL SERVICES ADMINISTRATION

Property Obtained Through the Use of Charge Cards; Notice of GSA Bulletin FMR B–25

AGENCY: Office of Governmentwide Policy, General Services Administration (GSA).

ACTION: Notice of a bulletin.

SUMMARY: This notice announces GSA Federal Management Regulation (FMR) Bulletin B–25 which provides guidance to all agencies acquiring property using the government charge card.

DATES: The bulletin announced in this notice became effective January 25, 2010.

FOR FURTHER INFORMATION CONTACT: For clarification of content, contact General Services Administration, Office of Governmentwide Policy, Office of Travel, Transportation and Asset Management, at (202) 501–1777. Please cite Bulletin FMR B–25.

SUPPLEMENTARY INFORMATION:

A. Background

Although charge cards provide a great benefit in streamlining procurement of needed items, the property obtained in this way presents special management and accountability challenges to agencies. Appendix B of OMB Circular A–123 prescribes policies and procedures to agencies regarding how to

maintain internal controls that reduce the risk of fraud, waste, and error in Government charge card programs. As provided in Appendix B of OMB Circular A–123, agencies must have reasonable, effective internal controls so that this property can be accounted for and to ensure property is limited to use for official purposes.

The Office of Management and Budget (OMB) Open Government Directive instructs agencies to take specific actions to implement the principles of transparency, participation and collaboration. Agencies are accountable for the quality and objectivity of internal controls over the spending information. Agencies must make certain that information conforms to OMB guidance on information quality.

B. Procedures

Bulletins regarding asset management are located on the Internet at *www.gsa.gov/fmrbulletin* as Federal Management Regulation (FMR) bulletins.

Dated: January 29, 2010.

Robert Holcombe,

Director, Personal Property Management Policy.

[FR Doc. 2010–2496 Filed 2–4–10; 8:45 am]

BILLING CODE 6820–14–P

DEPARTMENT OF HEALTH AND HUMAN SERVICES

[Document Identifier: OS–0990–0308]

Agency Information Collection Request; 60-Day Public Comment Request

AGENCY: Office of the Secretary, HHS.

In compliance with the requirement of section 3506(c)(2)(A) of the Paperwork Reduction Act of 1995, the Office of the Secretary (OS), Department of Health and Human Services, is publishing the following summary of a proposed information collection request for public comment. Interested persons are invited to send comments regarding this burden estimate or any other aspect of this collection of information, including any of the following subjects: (1) The necessity and utility of the proposed information collection for the proper performance of the agency's functions; (2) the accuracy of the estimated burden; (3) ways to enhance the quality, utility, and clarity of the information to be collected; and (4) the use of automated collection techniques or other forms of information technology to minimize the information collection burden. To obtain copies of the supporting statement and any related forms for the proposed paperwork collections referenced above, e-mail your request, including your address, phone number, OMB number, and OS document identifier, to *Sherette.funncoleman@hhs.gov,* or call the Reports Clearance Office on (202) 690–6162. Written comments and recommendations for the proposed information collections must be directed to the OS Paperwork Clearance Officer at the above e-mail address within 60 days.

Proposed Project: The Effect of Reducing Falls on Acute and Long-Term Care Expenses OMB No. 0990–0308—Extension—Assistant Secretary Planning Evaluation (ASPE).

Abstract: ASPE is conducting a demonstration and evaluation of a multi-factorial fall prevention program to measure its impact on health outcomes for the elderly as well as acute and long-term care use and cost. The study is being conducted among a sample of individuals with private long-term care insurance who are age 75 and over using a multi-tiered random experimental research design to evaluate the effectiveness of the proposed fall prevention intervention program. The project will provide information to advance Departmental goals of reducing injury and improving the use of preventive services to positively impact Medicare use and spending. The project began in Spring 2008 and is expected to be completed in Spring 2013.

ESTIMATED ANNUALIZED BURDEN TABLE

Forms (if necessary)	Type of respondent	Number of respondents	Number of responses per respondent	Average burden hours per response	Total burden hours
Initial Telephone Screen	Active Control Group (ACG)/ Experimental Group (EG)	2400	1	20 minutes	800 hours
In-person interview	EG	1200	1	1.25 hours	1,500 hours
Jump start phone call	EG	1200	1	30 minutes	600 hours
Quarterly phone calls	ACG/EG	10 minutes	1	10 minutes	1,220 hours
Final Telephone Screen	ACG/EG	1766	1	20 minutes	589 hours
Final In-person interview	EG	884	1	1.25 hours	1,105 hours
Total					5,814 hours

Seleda Perryman,

Office of the Secretary, Paperwork Reduction Act Reports Clearance Officer.

[FR Doc. 2010–2511 Filed 2–4–10; 8:45 am]

BILLING CODE 4150–39–P

DEPARTMENT OF HEALTH AND HUMAN SERVICES

Public Meeting of the President's Advisory Council on Faith-Based and Neighborhood Partnerships

ACTION: Notice.

SUMMARY: A notice was published in the **Federal Register** on Tuesday, Feb. 2, 2010, to announce a meeting of the President's Advisory Council on Faith-Based and Neighborhood Partnerships that was scheduled to be held on Tuesday, Feb. 9th, 2010. This meeting has been cancelled in its entirety. We will publish a new notice when the meeting has been rescheduled.

FOR FURTHER INFORMATION CONTACT: Mara Vanderslice, White House Office of Faith-Based and Neighborhood Partnerships at *mvanderslice@who.eop.gov.*

Dated: February 2, 2010.

Jamison Citron,

Special Assistant, Office of Faith-Based and Neighborhood Partnerships.

[FR Doc. 2010–2577 Filed 2–4–10; 8:45 am]

BILLING CODE 4154–07–P

DEPARTMENT OF HEALTH AND HUMAN SERVICES

Food and Drug Administration

[Docket No. FDA–2010–D–0035]

Agency Information Collection Activities; Proposed Collection; Comment Request; Guidance for Industry on How to Submit a Notice of Intent to Slaughter for Human Food Purposes in Electronic Format to the Center for Veterinary Medicine

AGENCY: Food and Drug Administration, HHS.

ACTION: Notice.

SUMMARY: The Food and Drug Administration (FDA) is announcing an opportunity for public comment on the proposed collection of certain information by the agency. Under the Paperwork Reduction Act of 1995 (the PRA), Federal agencies are required to publish notice in the **Federal Register** concerning each proposed collection of information, including each proposed extension of an existing collection of information, and to allow 60 days for public comment in response to the notice. This notice solicits comments on the reporting requirements for the information collection on how to submit a notice of intent to slaughter for human food purposes in electronic format to the Center for Veterinary Medicine (CVM).

DATES: Submit written or electronic comments on the collection of information by April 6, 2010.

ADDRESSES: Submit electronic comments on the collection of information to *http://www.regulations.gov*. Submit written comments on the collection of information to the Division of Dockets Management (HFA–305), Food and Drug Administration, 5630 Fishers Lane, rm. 1061, Rockville, MD 20852. All comments should be identified with the docket number found in brackets in the heading of this document.

FOR FURTHER INFORMATION CONTACT: Denver Presley, Jr., Office of Information Management, Food and Drug Administration, 1350 Piccard Dr., PI50–400B, Rockville, MD 20850, 301–796–3793.

SUPPLEMENTARY INFORMATION: Under the PRA (44 U.S.C. 3501–3520), Federal agencies must obtain approval from the Office of Management and Budget (OMB) for each collection of information they conduct or sponsor. "Collection of information" is defined in 44 U.S.C. 3502(3) and 5 CFR 1320.3(c) and includes agency requests or requirements that members of the public submit reports, keep records, or provide information to a third party. Section 3506(c)(2)(A) of the PRA (44 U.S.C. 3506(c)(2)(A)) requires Federal agencies to provide a 60-day notice in the **Federal Register** concerning each proposed collection of information, including each proposed extension of an existing collection of information, before submitting the collection to OMB for approval. To comply with this requirement, FDA is publishing notice of the proposed collection of information set forth in this document.

With respect to the following collection of information, FDA invites comments on these topics: (1) Whether the proposed collection of information is necessary for the proper performance of FDA's functions, including whether the information will have practical utility; (2) the accuracy of FDA's estimate of the burden of the proposed collection of information, including the validity of the methodology and assumptions used; (3) ways to enhance the quality, utility, and clarity of the information to be collected; and (4) ways to minimize the burden of the collection of information on respondents, including through the use of automated collection techniques, when appropriate, and other forms of information technology.

Guidance for Industry on How to Submit a Notice of Intent to Slaughter for Human Food Purposes in Electronic Format to the Center for Veterinary Medicine—Section 512(j) of the Federal Food, Drug, and Cosmetic Act (OMB Control Number 0910–0450)—Extension

Section 512(j) of the Federal Food, Drug, and Cosmetic Act (the act) (21 U.S.C. 360b(j)) gives FDA the authority to set conditions under which animals treated with investigational new animal drugs may be marketed for food use. Under this authority, CVM issues to a new animal drug sponsor (sponsors) a slaughter authorization letter that sets the terms under which investigational animals may be slaughtered. The U.S. Department of Agriculture (USDA),also monitors the slaughter of animals treated with investigational new animal drugs under the authority of the Meat Inspection Act (21 U.S.C. 601–695). Sponsors must submit slaughter notices each time investigational animals are presented for slaughter, unless this requirement is waived by an authorization letter (21 CFR 511.1(b)(5) and 9 CFR 309.17). These notifications assist CVM and USDA in monitoring the safety of the food supply. Slaughter notices were previously submitted to CVM and USDA in paper format. CVM's guidance on "How to Submit a Notice of Intent to Slaughter for Human Food Purposes in Electronic Format to the Center for Veterinary Medicine" provides sponsors with the option for submitting a slaughter notice as an e-mail attachment to CVM and USDA by the Internet. The electronic submission of slaughter notices is part of CVM's ongoing initiative to provide a method for paperless submissions. The likely respondents are new animal drug sponsors.

FDA estimates the burden of this collection of information as follows:

TABLE 1.—ESTIMATED ANNUAL REPORTING BURDEN[1]

Section of the act/FDA Form #	No. of. Respondents	Annual Frequency per Response	Total Annual Responses	Hours per Responses	Total Hours
512(j)/3488	40	0.4	16[2]	.08	1.3

[1] There are no capital costs or operating and maintenance costs associated with this collection of information.
[2] Electronic submissions received between January 1, 2008, and December 31, 2008.

The number of respondents in table 1 of this document is the number of sponsors registered to make electronic submissions (40). The number of total annual responses are based on a review of the actual number of submissions made between January 1, 2008, and December 31, 2008. Sixteen total annual responses times .08 hours per response = 1.3 total hours.

Submitting a slaughter notice electronically represents an alternative

to submitting a notice of intent to slaughter on paper. The reporting burden for compilation and submission of this information on paper is included in OMB clearance of the information collection provisions of 21 CFR 511.1 (OMB Control No. 0910–0450). The estimates in table 1 of this document reflect the burden associated with putting the same information on FDA Form 3488 and resulted from previous discussions with sponsors about the time necessary to complete this form.

Dated: January 29, 2010.

David Dorsey,

Acting Deputy Commissioner for Policy, Planning and Budget.

[FR Doc. 2010–2461 Filed 2–4–10; 8:45 am]

BILLING CODE 4160–01–S

DEPARTMENT OF HEALTH AND HUMAN SERVICES

Food and Drug Administration

[Docket No. FDA–2010–D–0043]

Agency Information Collection Activities; Proposed Collection; Comment Request; Guidance for Industry on How to Use E-Mail to Submit a Request for a Meeting or Teleconference in Electronic Format to The Center for Veterinary Medicine

AGENCY: Food and Drug Administration, HHS.

ACTION: Notice.

SUMMARY: The Food and Drug Administration (FDA) is announcing an opportunity for public comment on the proposed collection of certain information by the agency. Under the Paperwork Reduction Act of 1995 (the PRA), Federal agencies are required to publish notice in the **Federal Register** concerning each proposed collection of information, including each proposed extension of an existing collection of information, and to allow 60 days for public comment in response to the notice. This notice solicits comments on the reporting requirements regarding how to use e-mail to submit a request for a meeting or teleconference in electronic format to the Center for Veterinary Medicine (CVM).

DATES: Submit written or electronic comments on the collection of information by April 6, 2010.

ADDRESSES: Submit electronic comments on the collection of information to *http://www.regulations.gov*. Submit written comments on the collection of information to the Division of Dockets Management (HFA–305), Food and Drug Administration, 5630 Fishers Lane, rm. 1061, Rockville, MD 20852. All comments should be identified with the docket number found in brackets in the heading of this document.

FOR FURTHER INFORMATION CONTACT: Denver Presley, Jr., Office of Information Management (HFA–710), Food and Drug Administration, 5600 Fishers Lane, Rockville, MD 20857, 301–796–3793.

SUPPLEMENTARY INFORMATION: Under the PRA (44 U.S.C. 3501–3520), Federal agencies must obtain approval from the Office of Management and Budget (OMB) for each collection of information they conduct or sponsor. "Collection of information" is defined in 44 U.S.C. 3502(3) and 5 CFR 1320.3(c) and includes agency requests or requirements that members of the public submit reports, keep records, or provide information to a third party. Section 3506(c)(2)(A) of the PRA (44 U.S.C. 3506(c)(2)(A)) requires Federal agencies to provide a 60-day notice in the **Federal Register** concerning each proposed collection of information, including each proposed extension of an existing collection of information, before submitting the collection to OMB for approval. To comply with this requirement, FDA is publishing notice of the proposed collection of information set forth in this document.

With respect to the following collection of information, FDA invites comments on these topics: (1) Whether the proposed collection of information is necessary for the proper performance of FDA's functions, including whether the information will have practical utility; (2) the accuracy of FDA's estimate of the burden of the proposed collection of information, including the validity of the methodology and assumptions used; (3) ways to enhance the quality, utility, and clarity of the information to be collected; and (4) ways to minimize the burden of the collection of information on respondents, including through the use of automated collection techniques, when appropriate, and other forms of information technology.

Guidance for Industry on How to Submit a Request for a Meeting or Teleconference in Electronic Format to The Center for Veterinary Medicine—21 CFR 10.65 (OMB Control Number—(0910–0452)—Extension

CVM holds meetings and/or teleconferences when a sponsor requests a presubmission conference under 21 CFR 514.5, or requests a meeting to discuss general questions. Generally, meeting requests are submitted to CVM on paper. However, CVM now allows registered sponsors to submit information electronically, and to request meetings electronically, if they determine this is more efficient and time saving for them. CVM's guidance on "How to Submit a Request for a Meeting or Teleconference in Electronic Format to CVM" provides sponsors with the option to submit a request for a meeting or teleconference as an e-mail attachment by the internet.

The likely respondents are sponsors for new animal drug applications. FDA estimates the burden of this collection of information as follows:

TABLE 1.—ESTIMATED ANNUAL REPORTING BURDEN[1]

21 CFR Section/FDA Form 3489	No. of Respondents	Annual Frequency per Response	Total Annual Responses[2]	Hours per Response	Total Hours
10.64	40	2.4	96	.08	7.7

[1] There are no capital costs or operating and maintenance costs associated with this collection of information.
[2] Electronic submissions received between January 1, 2008, and December 31, 2008.

The number of respondents in table 1 of this document is the number of sponsors registered to make electronic submissions (40). The number of total annual responses is based on a review of the actual number of such submissions made between January 1, 2008, and December 31, 2008, (96 x hours per response (.08) = 7.7 total hours).

Dated: January 28, 2010.

David Dorsey,

Acting Deputy Commissioner for Policy, Planning and Budget.

[FR Doc. 2010–2459 Filed 2–4–10; 8:45 am]

BILLING CODE 4160–01–S

DEPARTMENT OF HEALTH AND HUMAN SERVICES

Food and Drug Administration

[Docket No. FDA–2010–N–0033]

Agency Information Collection Activities; Proposed Collection; Comment Request; Postmarket Surveillance

AGENCY: Food and Drug Administration, HHS.

ACTION: Notice.

SUMMARY: The Food and Drug Administration (FDA) is announcing an opportunity for public comment on the proposed collection of certain information by the agency. Under the Paperwork Reduction Act of 1995 (the PRA), Federal agencies are required to publish notice in the **Federal Register** concerning each proposed collection of information, including each proposed extension of an existing collection of information, and to allow 60 days for public comment in response to the notice. This notice solicits comments on information collection requirements for Postmarket Surveillance.

DATES: Submit written or electronic comments on the collection of information by April 6, 2010.

ADDRESSES: Submit electronic comments on the collection of information to *http://www.regulations.gov*. Submit written comments on the collection of information to the Division of Dockets Management (HFA–305), Food and Drug Administration, 5630 Fishers Lane, rm. 1061, Rockville, MD 20852. All comments should be identified with the docket number found in brackets in the heading of this document.

FOR FURTHER INFORMATION CONTACT: Daniel Gittleson, Office of Information Management (HFA–710), Food and Drug Administration, 5600 Fishers Lane, Rockville, MD 20857, 301–796–5156, *Daniel.Gittleson@fda.hhs.gov*.

SUPPLEMENTARY INFORMATION: Under the PRA (44 U.S.C. 3501–3520), Federal agencies must obtain approval from the Office of Management and Budget (OMB) for each collection of information they conduct or sponsor. "Collection of information" is defined in 44 U.S.C. 3502(3) and 5 CFR 1320.3(c) and includes agency requests or requirements that members of the public submit reports, keep records, or provide information to a third party. Section 3506(c)(2)(A) of the PRA (44 U.S.C. 3506(c)(2)(A)) requires Federal agencies to provide a 60-day notice in the **Federal Register** concerning each proposed collection of information, including each proposed extension of an existing collection of information before submitting the collection to OMB for approval. To comply with this requirement, FDA is publishing notice of the proposed collection of information set forth in this document.

With respect to the following collection of information, FDA invites comments on these topics: (1) Whether the proposed collection of information is necessary for the proper performance of FDA's functions, including whether the information will have practical utility; (2) the accuracy of FDA's estimate of the burden of the proposed collection of information, including the validity of the methodology and assumptions used; (3) ways to enhance the quality, utility, and clarity of the information to be collected; and (4) ways to minimize the burden of the collection of information on respondents, including through the use of automated collection techniques, when appropriate, and other forms of information technology.

Postmarket Surveillance—21 CFR Part 822 (OMB Control Number 0910–0449)—Extension

Section 522(a) of the Federal Food, Drug and Cosmetic Act (the act) (21 U.S.C. 360l) authorizes FDA to require manufacturers to conduct postmarket surveillance (PS) of any device that meets the criteria set forth in the statute.

The PS regulation establishes procedures that FDA uses to approve and disapprove PS plans. The regulation provides instructions to manufacturers so they know what information is required in a PS plan submission. FDA reviews PS plan submissions in accordance with part 822 (21 CFR part 822) in §§ 822.15 to 822.19 of the regulation, which describe the grounds for approving or disapproving a PS plan. In addition, the PS regulation provides instructions to manufacturers to submit interim and final reports in accordance with § 822.38.

Respondents to this collection of information are those manufacturers who require postmarket surveillance of their products.

FDA estimates the burden of this collection of information as follows:

TABLE 1.—ESTIMATED ANNUAL REPORTING BURDEN[1]

21 CFR Section	No. of Respondents	Annual Frequency per Response	Total Annual Responses	Hours per Response	Total Hours
822.9, 822.10	21	1	21	120	2,520
822.21 (supplements)	5	1	5	40	200
822.28 (stop marketing)	5	1	5	8	40
822.29 (request waiver)	1	1	1	40	40
822.30 (request exemption)	1	1	1	40	40
822.38 (reports)	40	1	40	40	1,600
Total					4,440

[1] There are no capital costs or operating and maintenance costs associated with this collection of information.

TABLE 2.—ESTIMATED ANNUAL RECORDKEEPING BURDEN[1]

21 CFR Section	No. of Recordkeepers	Annual Frequency per Recordkeeping	Total Annual Record	Hours per Records	Total Hours
822.31	21	1	21	20	420
822.32	63	1	63	10	630
Total					1,050

[1] There are no capital costs or operating and maintenance costs associated with this collection of information.

Explanation of Reporting Burden Estimate

The burden captured in table 1 for this document for each of these responses is based on the data available in FDA's internal tracking system for 2009. There was not an internal tracking system prior to 2009.

Sections 822.26, 822.27, and 822.34 do not constitute information collection subject to review under the PRA because "it entails no burden other than that necessary to identify the respondent, the date, the respondent's address, and the nature of the instrument." (5 CFR 1320.3(h)(1)).

Explanation of Recordkeeping Burden Estimate

FDA expects that at least some of the manufacturers will be able to satisfy the PS requirement using information or data they already have. For purposes of calculating burden, however, FDA has assumed that each PS order can only be satisfied by a 3-year clinically-based surveillance plan, using three investigators. These estimates are based on FDA's knowledge and experience with limited implementation of section 522 under the Safe Medical Devices Act. Therefore, FDA would expect that the recordkeeping requirements would apply to a maximum of 21 manufacturers (3 to 4 added each year) and 30 investigators (3 per surveillance plan). After 3 years, FDA would expect these numbers to remain level as the surveillance plans conducted under the earliest orders reach completion and new orders are issued.

Dated: January 27, 2010.

David Dorsey,

Acting Deputy Commissioner for Policy, Planning and Budget.

[FR Doc. 2010–2458 Filed 2–4–10; 8:45 am]

BILLING CODE 4160–01–S

DEPARTMENT OF HEALTH AND HUMAN SERVICES

Food and Drug Administration

[Docket No. FDA–2010–D–0034]

Agency Information Collection Activities; Proposed Collection; Comment Request; Guidance for Industry on How to Submit a Notice of Final Disposition of Investigational Animals Not Intended for Immediate Slaughter in Electronic Format to the Center for Veterinary Medicine

AGENCY: Food and Drug Administration, HHS.

ACTION: Notice.

SUMMARY: The Food and Drug Administration (FDA) is announcing an opportunity for public comment on the proposed collection of certain information by the agency. Under the Paperwork Reduction Act of 1995 (the PRA), Federal agencies are required to publish notice in the **Federal Register** concerning each proposed collection of information, including each proposed extension of an existing collection of information, and to allow 60 days for public comment in response to the notice. This notice solicits comments on the reporting requirements for the information collection activity "How to Submit a Notice of Final Disposition of Investigational Animals Not Intended for Immediate Slaughter In Electronic Format to the Center for Veterinary Medicine."

DATES: Submit written or electronic comments on the collection of information by April 6, 2010.

ADDRESSES: Submit electronic comments on the collection of information to *http://www.regulations.gov*. Submit written comments on the collection of information to the Division of Dockets Management (HFA–305), Food and Drug Administration, 5630 Fishers Lane, rm. 1061, Rockville, MD 20852. All comments should be identified with the docket number found in brackets in the heading of this document.

FOR FURTHER INFORMATION CONTACT: Denver Presley, Jr., Office of Information Management, Food and Drug Administration, 1350 Piccard Dr., PI50–400B, Rockville, MD 20850, 301–796–3793.

SUPPLEMENTARY INFORMATION: Under the PRA (44 U.S.C. 3501–3520), Federal agencies must obtain approval from the Office of Management and Budget (OMB) for each collection of information they conduct or sponsor. "Collection of information" is defined in 44 U.S.C. 3502(3) and 5 CFR 1320.3(c) and includes agency requests or requirements that members of the public submit reports, keep records, or provide information to a third party. Section 3506(c)(2)(A) of the PRA (44 U.S.C. 3506(c)(2)(A)) requires Federal agencies to provide a 60-day notice in the **Federal Register** concerning each proposed collection of information, including each proposed extension of an existing collection of information, before submitting the collection to OMB for approval. To comply with this requirement, FDA is publishing notice of the proposed collection of information set forth in this document.

With respect to the following collection of information, FDA invites comments on these topics: (1) Whether the proposed collection of information is necessary for the proper performance of FDA's functions, including whether the information will have practical utility; (2) the accuracy of FDA's estimate of the burden of the proposed collection of information, including the validity of the methodology and assumptions used; (3) ways to enhance the quality, utility, and clarity of the information to be collected; and (4) ways to minimize the burden of the collection of information on respondents, including through the use of automated collection techniques, when appropriate, and other forms of information technology.

Guidance for Industry on How to Submit a Notice of Final Disposition of Investigational Animals Not Intended for Immediate Slaughter in Electronic Format to the Center for Veterinary Medicine—21 CFR 514.117(b)(2) and 21 CFR 511.1(b)(5); (OMB Control Number 0910–0453)—Extension

The Center for Veterinary Medicine (CVM) monitors the final disposition of investigational animals where such animals do not enter the human food chain immediately at the completion of an investigational study. CVM's monitoring of the final disposition of investigational food animals is intended to ensure that unsafe residues of new animal drugs do not get into the food supply. CVM issues a slaughter authorization letter to investigational new animal drug (INAD) sponsors that sets the terms under which investigational animals may be slaughtered (21 CFR 511.1(b)(5)). Also in the letter, CVM requests that sponsors submit a notice of final disposition of investigational animals (NFDA) not intended for immediate slaughter. NFDAs have historically been submitted to CVM on paper. CVM's guidance entitled "How to Submit a Notice of Final Disposition of Investigational Animals Not Intended for Immediate Slaughter in Electronic Format to CVM," provides sponsors with an option to submit an NFDA as an e-mail attachment to CVM via the Internet.

The likely respondents are INAD sponsors.

FDA estimates the burden of this collection of information as follows:

TABLE 1.—ESTIMATED ANNUAL REPORTING BURDEN[1]

21 CFR Section/Form No. 3487	No. of Respondents	Annual Frequency per Response	Total Annual Responses[2]	Hours per Response	Total Hours
511.1(b)(5)	40	0.4	16	.08	1.3

[1] There are no capital costs or operating and maintenance costs associated with this collection of information.
[2] Electronic submissions received between January 1, 2008, and December 31, 2008.

The number of respondents in table 1 of this document are the number of sponsors registered to make electronic submissions (40). The number of total annual responses is based on a review of the actual number of such submissions made between January 1, 2008, and December 31, 2008. Thus, FDA estimates the total reporting burden at 1.3 hours (16 x .08 = 1.3 total hours).

Dated: January 29, 2010.

David Dorsey,

Acting Deputy Commissioner for Policy, Planning and Budget.

[FR Doc. 2010–2527 Filed 2–4–10; 8:45 am]

BILLING CODE 4160–01–S

DEPARTMENT OF HEALTH AND HUMAN SERVICES

Food and Drug Administration

[Docket No. FDA–2010–N–0057]

Agency Information Collection Activities; Proposed Collection; Comment Request; Guidance for Industry on How to Submit Information in Electronic Format to the Center for Veterinary Medicine Using the Food and Drug Administration Electronic Submission Gateway

AGENCY: Food and Drug Administration, HHS.

ACTION: Notice.

SUMMARY: The Food and Drug Administration (FDA) is announcing an opportunity for public comment on the proposed collection of certain information by the agency. Under the Paperwork Reduction Act of 1995 (the PRA), Federal agencies are required to publish notice in the **Federal Register** concerning each proposed collection of information, including each proposed extension of an existing collection of information, and to allow 60 days for public comment in response to the notice. This notice solicits comments on the reporting requirements for the Center for Veterinary Medicine's (CVM's) "Guidance for Industry on How to Submit Information in Electronic Format to the Center for Veterinary Medicine Using the FDA Electronic Gateway."

DATES: Submit written or electronic comments on the collection of information by April 6, 2010.

ADDRESSES: Submit electronic comments on the collection of information to *http://www.regulations.gov*. Submit written comments on the collection of information to the Division of Dockets Management (HFA–305), Food and Drug Administration, 5630 Fishers Lane, rm. 1061, Rockville, MD 20852. All comments should be identified with the docket number found in brackets in the heading of this document.

FOR FURTHER INFORMATION CONTACT: Denver Presley, Jr., Office of the Information Management (HFA–710), Food and Drug Administration, 5600 Fishers Lane, Rockville, MD 20857, 301–796–3793.

SUPPLEMENTARY INFORMATION: Under the PRA (44 U.S.C. 3501–3520), Federal agencies must obtain approval from the Office of management and budget (OMB) for each collection of information they conduct or sponsor. "Collection of information" is defined in 44 U.S.C. 3502(3) and 5 CFR 1320.3(c) and includes agency requests or requirements that members of the public submit reports, keep records, or provide information to a third party. Section 3506(c)(2)(A) of the PRA (44 U.S.C. 3506(c)(2)(A)) requires Federal agencies to provide a 60-day notice in the **Federal Register** concerning each proposed collection of information, including each proposed extension of an existing collection of information, before submitting the collection to OMB for approval. To comply with this requirement, FDA is publishing notice of the proposed collection of information set forth in this document.

With respect to the following collection of information, FDA invites comments on these topics: (1) Whether the proposed collection of information is necessary for the proper performance of FDA's functions, including whether the information will have practical utility; (2) the accuracy of FDA's estimate of the burden of the proposed collection of information, including the validity of the methodology and assumptions used; (3) ways to enhance the quality, utility, and clarity of the information to be collected; and (4) ways to minimize the burden of the collection of information on respondents, including through the use of automated collection techniques, when appropriate, and other forms of information technology.

Guidance for Industry on How to Submit Information in Electronic Format to the Center for Veterinary Medicine Using the FDA Electronic Submission Gateway—21 CFR 11.2 (OMB Control Number 0910–0454)—Extension)

CVM accepts certain types of submissions electronically with no requirement for a paper copy. These types of documents are listed in public docket 97S–0251 as required by 21 CFR 11.2. CVM's ability to receive and process information submitted electronically is limited by its current information technology capabilities and the requirements of the Electronic Records; Electronic Signatures final regulation. CVM's guidance entitled "Guidance for Industry: How to Submit Information in Electronic Format to CVM Using the FDA Electronic Submission Gateway" outlines general standards to be used for the submission of any information by e-mail.

The likely respondents are sponsors for new animal drug applications.

FDA estimates the burden of this collection of information as follows:

TABLE 1.—ESTIMATED ANNUAL REPORTING BURDEN[1]

21 CFR Section/FDA Form 3538	No. of Respondents	Annual Frequency per Response	Total Annual Responses[2]	Hours per Response	Total Hours
11.2	40	1.3	52	.08	4.2

[1] There are no capital costs or operating and maintenance costs associated with this collection of information.
[2] Electronic submissions received between July 1, 2005, and June 30, 2006.

The number of respondents in table 1 of this document is the number of sponsors registered to make electronic submissions (40). The number of total annual responses is based on a review of the actual number of such submissions made between January 1, 2008 and December 31, 2008, (52 x hours per response (.08) =4.2 total hours).

Dated: January 29, 2010.

David Dorsey,

Acting Deputy Commissioner for Policy, Planning and Budget.

[FR Doc. 2010–2523 Filed 2–4–10; 8:45 am]

BILLING CODE 4160–01–S

DEPARTMENT OF HEALTH AND HUMAN SERVICES

National Institutes of Health

National Center for Complementary & Alternative Medicine; Notice of Closed Meeting

Pursuant to section 10(d) of the Federal Advisory Committee Act, as amended (5 U.S.C. App.), notice is hereby given of the following meeting.

The meeting will be closed to the public in accordance with the provisions set forth in sections 552b(c)(4) and 552b(c)(6), Title 5 U.S.C., as amended. The grant applications and the discussions could disclose confidential trade secrets or commercial property such as patentable material, and personal information concerning individuals associated with the grant applications, the disclosure of which would constitute a clearly unwarranted invasion of personal privacy.

Name of Committee: National Center for Complementary and Alternative Medicine Special Emphasis Panel Training.

Date: March 1, 2010.

Time: 8 a.m. to 5 p.m.

Agenda: To review and evaluate grant applications.

Place: Bethesda Marriott Suites, 6711 Democracy Boulevard, Bethesda, MD 20817.

Contact Person: Peter Kozel, PhD, Scientific Review Officer, NCCAM, 6707 Democracy Boulevard, Suite 401, Bethesda, MD 20892–5475, 301–496–8004, *kozelp@mail.nih.gov.*

(Catalogue of Federal Domestic Assistance Program Nos. 93.213, Research and Training in Complementary and Alternative Medicine, National Institutes of Health, HHS)

Dated: January 29, 2010.

Jennifer Spaeth,

Director, Office of Federal Advisory Committee Policy.

[FR Doc. 2010–2557 Filed 2–4–10; 8:45 am]

BILLING CODE 4140–01–P

DEPARTMENT OF HEALTH AND HUMAN SERVICES

National Institutes of Health

National Institute of Biomedical Imaging and Bioengineering; Notice of Closed Meeting

Pursuant to section 10(d) of the Federal Advisory Committee Act, as amended (5 U.S.C. App.), notice is hereby given of the following meeting.

The meeting will be closed to the public in accordance with the provisions set forth in sections 552b(c)(4) and 552b(c)(6), Title 5 U.S.C., as amended. The grant applications and the discussions could disclose confidential trade secrets or commercial property such as patentable material, and personal information concerning individuals associated with the grant applications, the disclosure of which would constitute a clearly unwarranted invasion of personal privacy.

Name of Committee: National Institute of Biomedical Imaging and Bioengineering Special; 2010/05 SBIR Review.

Date: March 11, 2010.

Time: 8:30 a.m. to 5 p.m.

Agenda: To review and evaluate grant applications.

Place: Gaylord National Hotel & Convention Center, 201 Waterfront Street, National Harbor, MD 20745.

Contact Person: John K. Hayes, PhD, Scientific Review Officer, 6707 Democracy Boulevard, Suite 959, Democracy Two, Bethesda, MD 20892, 301–451–3398, *hayesj@mail.nih.gov.*

Dated: February 1, 2010

Jennifer Spaeth,

Director, Office of Federal Advisory Committee Policy.

[FR Doc. 2010–2562 Filed 2–4–10; 8:45 am]

BILLING CODE 4140–01–P

DEPARTMENT OF HEALTH AND HUMAN SERVICES

National Institutes of Health

Center for Scientific Review; Notice of Closed Meeting

Pursuant to section 10(d) of the Federal Advisory Committee Act, as amended (5 U.S.C. App.), notice is hereby given of the following meeting.

The meeting will be closed to the public in accordance with the provisions set forth in sections 552b(c)(4) and 552b(c)(6), Title 5 U.S.C., as amended. The grant applications and the discussions could disclose confidential trade secrets or commercial property such as patentable material, and personal information concerning individuals associated with the grant applications, the disclosure of which would constitute a clearly unwarranted invasion of personal privacy.

Name of Committee: Center for Scientific Review Special Emphasis Panel, Member Conflict: Neurodevices, Bioengineering and Biomodeling.

Date: February 24, 2010.

Time: 2 p.m. to 5 p.m.
Agenda: To review and evaluate grant applications.
Place: National Institutes of Health, 6701 Rockledge Drive, Bethesda, MD 20892. (Telephone Conference Call.)
Contact Person: Vilen A. Movsesyan, PhD, Scientific Review Officer, Center for Scientific Review, National Institutes of Health, 6701 Rockledge Drive, Room 4040M, MSC 7806, Bethesda, MD 20892. 301–402–7278. *movsesyanv@csr.nih.gov.*

(Catalogue of Federal Domestic Assistance Program Nos. 93.306, Comparative Medicine; 93.333, Clinical Research, 93.306, 93.333, 93.337, 93.393–93.396, 93.837–93.844, 93.846–93.878, 93.892, 93.893, National Institutes of Health, HHS)

Dated: January 28, 2010.

Jennifer Spaeth,

Director, Office of Federal Advisory Committee Policy.

[FR Doc. 2010–2464 Filed 2–4–10; 8:45 am]

BILLING CODE 4140–01–P

DEPARTMENT OF HEALTH AND HUMAN SERVICES

National Institutes of Health

Center for Scientific Review; Amended Notice of Meeting

Notice is hereby given of a change in the meeting of the Center for Scientific Review Special Emphasis Panel, February 24, 2010, 6 p.m. to February 26, 2010, 4 p.m., Hilton Salt Lake City Center, 255 South West Temple, Salt Lake City, UT, 84101 which was published in the **Federal Register** on January 26, 2010, 75 FR 4092–4093.

The meeting title has been changed to "Program Project: Integrative Biomedical Computing Resource Center". The meeting is closed to the public.

Dated: January 28, 2010.

Jennifer Spaeth,

Director, Office of Federal Advisory Committee Policy.

[FR Doc. 2010–2462 Filed 2–4–10; 8:45 am]

BILLING CODE 4140–01–P

DEPARTMENT OF HEALTH AND HUMAN SERVICES

National Institutes of Health

National Cancer Institute; Amended Notice of Meeting

Notice is hereby given of a change in the meeting of the National Cancer Advisory Board, February 8, 2010, 6:30 p.m. to February 10, 2010, 12 p.m., National Institutes of Health, Building 31, 31 Center Drive, Bethesda, MD 20892, which was published in the **Federal Register** on January 26, 2010, 75 FR 4093.

This **Federal Register** Notice is being amended to change the location of the Experimental Therapeutics Ad Hoc Subcommittee Meeting location to the NIH Campus, 6th Floor, Conference Room 7, C Wing, Building 31 instead of the Hyatt Regency Bethesda Hotel. The start and end times have also been changed to 12 p.m. to 1 p.m. instead of 6:30 p.m. to 8 p.m.

Dated: January 28, 2010.

Jennifer Spaeth,

Director, Office of Federal Advisory Committee Policy.

[FR Doc. 2010–2440 Filed 2–4–10; 8:45 am]

BILLING CODE 4140–01–P

DEPARTMENT OF HEALTH AND HUMAN SERVICES

National Institutes of Health

Center for Scientific Review; Notice of Closed Meetings

Pursuant to section 10(d) of the Federal Advisory Committee Act, as amended (5 U.S.C. App.), notice is hereby given of the following meetings.

The meetings will be closed to the public in accordance with the provisions set forth in sections 552b(c)(4) and 552b(c)(6), Title 5 U.S.C., as amended. The grant applications and the discussions could disclose confidential trade secrets or commercial property such as patentable material, and personal information concerning individuals associated with the grant applications, the disclosure of which would constitute a clearly unwarranted invasion of personal privacy.

Name of Committee: Center for Scientific Review Special Emphasis Panel; Member Conflict: CASE and KNOD.
Date: February 19, 2010.
Time: 12 p.m. to 5 p.m.
Agenda: To review and evaluate grant applications.
Place: National Institutes of Health, 6701 Rockledge Drive, Bethesda, MD 20892 (Telephone Conference Call).
Contact Person: Bob Weller, PhD, Scientific Review Officer, Center for Scientific Review, National Institutes of Health, 6701 Rockledge Drive, Room 3160, MSC 7770, Bethesda, MD 20892, (301) 435–0694, *wellerr@csr.nih.gov.*

Name of Committe: Center for Scientific Review Special Emphasis Panel; Oral Microbiology, Immunology and Wound Healing.
Date: February 22–24, 2010.
Time: 1 p.m. to 7 p.m.
Agenda: To review and evaluate grant applications.
Place: National Institutes of Health, 6701 Rockledge Drive, Bethesda, MD 20892 (Virtual Meeting).
Contact Person: Priscilla B. Chen, PhD, Scientific Review Officer, Center for Scientific Review, National Institutes of Health, 6701 Rockledge Drive, Room 4104, MSC 7814, Bethesda, MD 20892, (301) 435–1787, *chenp@csr.nih.gov.*

Name of Committee: Center for Scientific Review Special Emphasis Panel; Fellowship: Oncological Sciences.
Date: February 22–23, 2010.
Time: 8 a.m. to 5 p.m.
Agenda: To review and evaluate grant applications.
Place: Hyatt Regency Bethesda, One Bethesda Metro Center, 7400 Wisconsin Avenue, Bethesda, MD 20814.
Contact Person: Ross D. Shonat, PhD, Scientific Review Officer, Center for Scientific Review, National Institutes of Health, 6701 Rockledge Drive, Room 5156, MSC 7849, Bethesda, MD 20892, 301–435–2786, *shonatr@csr.nih.gov.*

Name of Committee: Center for Scientific Review Special Emphasis Panel; Member Conflict: Clinical Neuroimmunology and Brain Tumors.
Date: February 25–26, 2010.
Time: 11 a.m. to 5 p.m.
Agenda: To review and evaluate grant applications.
Place: National Institutes of Health, 6701 Rockledge Drive, Bethesda, MD 20892 (Virtual Meeting).
Contact Person: Samuel C. Edwards, PhD, Chief, BDCN IRG, Center for Scientific Review, National Institutes of Health, 6701 Rockledge Drive, Room 4200, MSC 7812, Bethesda, MD 20892, (301) 435–1152, *edwardss@csr.nih.gov.*

Name of Committee: Center for Scientific Review Special Emphasis Panel; Member Conflicts in Biobehavioral Regulation.
Date: March 2, 2010.
Time: 9:30 a.m. to 12 p.m.
Agenda: To review and evaluate grant applications.
Place: National Institutes of Health, 6701 Rockledge Drive, Bethesda, MD 20892 (Telephone Conference Call).
Contact Person: Jane A. Doussard-Roosevelt, PhD, Scientific Review Officer, Center for Scientific Review, National Institutes of Health, 6701 Rockledge Drive, Room 3184, MSC 7848, Bethesda, MD 20892, (301) 435–4445, *doussarj@csr.nih.gov.*

Name of Committee: Center for Scientific Review Special Emphasis Panel; Member Conflict: Cardiovascular Ion Channels.
Date: March 4, 2010.
Time: 2 p.m. to 4 p.m.
Agenda: To review and evaluate grant applications.
Place: National Institutes of Health, 6701 Rockledge Drive, Bethesda, MD 20892 (Telephone Conference Call).
Contact Person: Joseph Thomas Peterson, PhD, Scientific Review Officer, Center for Scientific Review, National Institutes of Health, 6701 Rockledge Drive, Room 4118, MSC 7814, Bethesda, MD 20892, 301–443–8130.

Name of Committee: Center for Scientific Review Special Emphasis Panel; Member

Conflict: Age and Social Support and Cognition.

Date: March 5, 2010.

Time: 1 p.m. to 3 p.m.

Agenda: To review and evaluate grant applications.

Place: National Institutes of Health, 6701 Rockledge Drive, Bethesda, MD 20892 (Telephone Conference Call).

Contact Person: Anna L. Riley, PhD, Scientific Review Officer, Center for Scientific Review, National Institutes of Health, 6701 Rockledge Drive, Room 3114, MSC 7759, Bethesda, MD 20892, 301–435–2889, *rileyann@csr.nih.gov.*

(Catalogue of Federal Domestic Assistance Program Nos. 93.306, Comparative Medicine; 93.333, Clinical Research, 93.306, 93.333, 93.337, 93.393–93.396, 93.837–93.844, 93.846–93.878, 93.892, 93.893, National Institutes of Health, HHS)

Dated: January 29, 2010.

Jennifer Spaeth,

Director, Office of Federal Advisory Committee Policy.

[FR Doc. 2010–2439 Filed 2–4–10; 8:45 am]

BILLING CODE 4140–01–P

DEPARTMENT OF HEALTH AND HUMAN SERVICES

National Institutes of Health

National Cancer Institute; Notice of Closed Meeting

Pursuant to section 10(d) of the Federal Advisory Committee Act, as amended (5 U.S.C. App.), notice is hereby given of a meeting of the Board of Scientific Counselors for Clinical Sciences and Epidemiology National Cancer Institute.

The meeting will be closed to the public as indicated below in accordance with the provisions set forth in section 552b(c)(6), Title 5 U.S.C., as amended for the review, discussion, and evaluation of individual intramural programs and projects conducted by the National Cancer Institute, including consideration of personnel qualifications and performance, and the competence of individual investigators, the disclosure of which would constitute a clearly unwarranted invasion of personal privacy.

Name of Committee: Board of Scientific Counselors for Clinical Sciences and Epidemiology National Cancer Institute.

Date: March 15, 2010.

Time: 9 a.m. to 3 p.m.

Agenda: To review and evaluate personal qualifications and performance, and competence of individual investigators.

Place: National Institutes of Health, National Cancer Institute, 9000 Rockville Pike, Building 31, Conference Room 10, Bethesda, MD 20892.

Time: 6 p.m. to 10 p.m.

Agenda: To review and evaluate personal qualifications and performance, and competence of individual investigators.

Place: Double Tree Hotel, 8120 Wisconsin Avenue, Bethesda, MD 20814.

Contact Person: Brian E. Wojcik, PhD, Senior Review Administrator, Institute Review Office, Office of the Director, National Cancer Institute, 6116 Executive Boulevard, Room 2201, Bethesda, MD 20892. (301) 496–7628. *wojcikb@mail.nih.gov.*

In the interest of security, NIH has instituted stringent procedures for entrance onto the NIH campus. All visitor vehicles, including taxicabs, hotel, and airport shuttles will be inspected before being allowed on campus. Visitors will be asked to show one form of identification (for example, a government-issued photo ID, driver's license, or passport) and to state the purpose of their visit.

Information is also available on the Institute's/Center's home page: *http://deainfo.nci.nih.gov/advisory/bsc.htm,* where an agenda and any additional information for the meeting will be posted when available.

(Catalogue of Federal Domestic Assistance Program Nos. 93.392, Cancer Construction; 93.393, Cancer Cause and Prevention Research; 93.394, Cancer Detection and Diagnosis Research; 93.395, Cancer Treatment Research; 93.396, Cancer Biology Research; 93.397, Cancer Centers Support; 93.398, Cancer Research Manpower; 93.399, Cancer Control, National Institutes of Health, HHS)

Dated: January 29, 2010.

Jennifer Spaeth,

Director, Office of Federal Advisory Committee Policy.

[FR Doc. 2010–2438 Filed 2–4–10; 8:45 am]

BILLING CODE 4140–01–P

DEPARTMENT OF HEALTH AND HUMAN SERVICES

National Institutes of Health

Center for Scientific Review; Amended Notice of Meeting

Notice is hereby given of a change in the meeting of the Center for Scientific Review Special Emphasis Panel, February 10, 2010, 8 a.m. to February 10, 2010, 5 p.m., National Institutes of Health, 6701 Rockledge Drive, Bethesda, MD 20892, which was published in the **Federal Register** on January 11, 2010, 75 FR 1397–1399.

The meeting has been changed to a video assisted meeting. The meeting time has been changed to 11 a.m. to 3 p.m. on February 10, 2010. The meeting is closed to the public.

Dated: January 28, 2010.

Jennifer Spaeth,

Director, Office of Federal Advisory Committee Policy.

[FR Doc. 2010–2437 Filed 2–4–10; 8:45 am]

BILLING CODE 4140–01–P

DEPARTMENT OF HEALTH AND HUMAN SERVICES

National Institutes of Health

Center for Scientific Review; Amended Notice of Meeting

Notice is hereby given of a change in the meeting of the Center for Scientific Review Special Emphasis Panel, February 17, 2010, 11 a.m. to February 17, 2010, 2 p.m., National Institutes of Health, 6701 Rockledge Drive, Bethesda, MD 20892, which was published in the **Federal Register** on January 26, 2010, 75 FR 4095.

The meeting title has been changed to "Member Conflict: CDIN and CNN Member Applications I." The meeting is closed to the public.

Dated: January 28, 2010.

Jennifer Spaeth,

Director, Office of Federal Advisory Committee Policy.

[FR Doc. 2010–2435 Filed 2–4–10; 8:45 am]

BILLING CODE 4140–01–P

DEPARTMENT OF HEALTH AND HUMAN SERVICES

National Institutes of Health

National Center for Complementary & Alternative Medicine; Notice of Closed Meeting

Pursuant to section 10(d) of the Federal Advisory Committee Act, as amended (5 U.S.C. App.), notice is hereby given of the following meeting.

The meeting will be closed to the public in accordance with the provisions set forth in sections 552b(c)(4) and 552b(c)(6), Title 5 U.S.C., as amended. The grant applications and the discussions could disclose confidential trade secrets or commercial property such as patentable material, and personal information concerning individuals associated with the grant applications, the disclosure of which would constitute a clearly unwarranted invasion of personal privacy.

Name of Committee: National Center for Complementary and Alternative Medicine Special Emphasis Panel; Basic Science R21s, Ks.

Date: March 8–9, 2010.

Time: 8 a.m. to 5 p.m.

Agenda: To review and evaluate grant applications.

Place: Courtyard by Marriott, Gaithersburg Washingtonian Center, 204 Boardwalk Place, Gaithersburg, MD.

Contact Person: Peter Kozel, PhD, Scientific Review Officer, NCCAM, 6707 Democracy Boulevard, Suite 401, Bethesda, MD 20892–5475, 301–496–8004, *kozelp@mail.nih.gov.*

(Catalogue of Federal Domestic Assistance Program Nos. 93.213, Research and Training in Complementary and Alternative Medicine, National Institutes of Health, HHS)

Dated: January 27, 2010.

Jennifer Spaeth,

Director, Office of Federal Advisory Committee Policy.

[FR Doc. 2010–2434 Filed 2–4–10; 8:45 am]

BILLING CODE 4140–01–P

DEPARTMENT OF HEALTH AND HUMAN SERVICES

National Institutes of Health

National Institute on Aging; Notice of Closed Meetings

Pursuant to section 10(d) of the Federal Advisory Committee Act, as amended (5 U.S.C. App.), notice is hereby given of the following meetings.

The meetings will be closed to the public in accordance with the provisions set forth in sections 552b(c)(4) and 552b(c)(6), Title 5 U.S.C., as amended. The grant applications and the discussions could disclose confidential trade secrets or commercial property such as patentable material, and personal information concerning individuals associated with the grant applications, the disclosure of which would constitute a clearly unwarranted invasion of personal privacy.

Name of Committee: National Institute on Aging Initial Review Group, Behavior and Social Science of Aging Review Committee.

Date: March 4–5, 2010.

Time: 4 p.m. to 12 p.m.

Agenda: To review and evaluate grant applications.

Place: Embassy Suites Chevy Chase, 4300 Military Road, Washington, DC 20015.

Contact Person: Jeannette L. Johnson, PhD, Scientific Review Officer, National Institute on Aging, National Institutes of Health, 7201 Wisconsin Avenue, Suite 2C–212, Bethesda, MD 20892. 301–402–7705. *johnsonj9@nia.nih.gov*.

Name of Committee: National Institute on Aging Initial Review Group, Clinical Aging Review Committee.

Date: March 4–5, 2010.

Time: 6 p.m. to 4 p.m.

Agenda: To review and evaluate grant applications.

Place: Embassy Suites Chevy Chase, 4300 Military Road, Washington, DC 20015.

Contact Person: Alicja L. Markowska, PhD, DSC, National Institute on Aging, National Institutes of Health, Gateway Building 2C212, 7201 Wisconsin Avenue, Bethesda, MD 20892. 301–496–9666. *markowsa@nia.nih.gov.*

(Catalogue of Federal Domestic Assistance Program Nos. 93.866, Aging Research, National Institutes of Health, HHS)

Dated: January 27, 2010.

Jennifer Spaeth,

Director, Office of Federal Advisory Committee Policy.

[FR Doc. 2010–2432 Filed 2–4–10; 8:45 am]

BILLING CODE 4140–01–P

DEPARTMENT OF HEALTH AND HUMAN SERVICES

National Institutes of Health

National Library of Medicine; Notice of Closed Meeting

Pursuant to section 10(d) of the Federal Advisory Committee Act, as amended (5 U.S.C. App.), notice is hereby given of the following meeting.

The meeting will be closed to the public in accordance with the provisions set forth in sections 552b(c)(4) and 552b(c)(6), Title 5 U.S.C., as amended. The grant applications and the discussions could disclose confidential trade secrets or commercial property such as patentable material, and personal information concerning individuals associated with the grant applications, the disclosure of which would constitute a clearly unwarranted invasion of personal privacy.

Name of Committee: National Library of Medicine Special Emphasis Panel.

Date: April 22, 2010.

Time: 12 p.m. to 3 p.m.

Agenda: To review and evaluate grant applications.

Place: National Library of Medicine, 6705 Rockledge Drive, Suite 301, Bethesda, MD 20817, (Telephone Conference Call).

Contact Person: Zoe E. Huang, MD, Scientific Review Officer, Extramural Programs, National Library of Medicine, NIH, 6705 Rockledge Drive, Suite 301, Bethesda, MD 20892–7968, (301) 594–4937, *huangz@mail.nih.gov.*

(Catalogue of Federal Domestic Assistance Program Nos. 93.879, Medical Library Assistance, National Institutes of Health, HHS)

Dated: January 29, 2010.

Jennifer Spaeth,

Director, Office of Federal Advisory Committee Policy.

[FR Doc. 2010–2431 Filed 2–4–10; 8:45 am]

BILLING CODE 4140–01–M

DEPARTMENT OF HEALTH AND HUMAN SERVICES

National Institutes of Health

National Institute on Drug Abuse; Notice of Closed Meeting

Pursuant to section 10(d) of the Federal Advisory Committee Act, as amended (5 U.S.C. App.), notice is hereby given of the following meeting.

The meeting will be closed to the public in accordance with the provisions set forth in sections 552b(c)(4) and 552b(c)(6), Title 5 U.S.C., as amended. The contract proposals and the discussions could disclose confidential trade secrets or commercial property such as patentable material, and personal information concerning individuals associated with the contract proposals, the disclosure of which would constitute a clearly unwarranted invasion of personal privacy.

Name of Committee: National Institute on Drug Abuse Special Emphasis Panel, Rapid Assessments Tools of Sexual and Drug Use Risk Behaviors (5555).

Date: February 11, 2010.

Time: 1 p.m. to 4 p.m.

Agenda: To review and evaluate contract proposals.

Place: National Institutes of Health, 6101 Executive Boulevard, Rockville, MD 20852, (Telephone Conference Call)

Contact Person: Gerald L. McLaughlin, PhD, Scientific Review Administrator, Office of Extramural Affairs, National Institute on Drug Abuse, NIH, DHHS, Room 220, MSC 8401, 6101 Executive Blvd., Bethesda, MD 20892–8401, 301–402–6626, *gm145a@nih.gov.*

This notice is being published less than 15 days prior to the meeting due to the timing limitations imposed by the review and funding cycle.

(Catalogue of Federal Domestic Assistance Program Nos. 93.279, Drug Abuse and Addiction Research Programs, National Institutes of Health, HHS)

Dated: January 28, 2010.

Jennifer Spaeth,

Director, Office of Federal Advisory Committee Policy.

[FR Doc. 2010–2430 Filed 2–4–10; 8:45 am]

BILLING CODE 4140–01–M

DEPARTMENT OF HEALTH AND HUMAN SERVICES

National Institutes of Health

National Institute of Diabetes and Digestive and Kidney Diseases; Notice of Closed Meetings

Pursuant to section 10(d) of the Federal Advisory Committee Act, as amended (5 U.S.C. App.), notice is hereby given of the following meetings.

The meetings will be closed to the public in accordance with the provisions set forth in sections 552b(c)(4) and 552b(c)(6), Title 5 U.S.C., as amended. The grant applications and the discussions could disclose confidential trade secrets or commercial property such as patentable material, and personal information concerning

individuals associated with the grant applications, the disclosure of which would constitute a clearly unwarranted invasion of personal privacy.

Name of Committee: National Institute of Diabetes and Digestive and Kidney Diseases Special Emphasis Panel, Randomized Intervention for Vesicoureteral Reflux (RIVUR).

Date: March 8, 2010.

Time: 10 a.m. to 12 p.m.

Agenda: To review and evaluate grant applications.

Place: National Institutes of Health, Two Democracy Plaza, 6707 Democracy Boulevard, Bethesda, MD 20892. (Telephone Conference Call)

Contact Person: Lakshmanan Sankaran, PhD, Scientific Review Officer, Review Branch, DEA, NIDDK, National Institutes of Health, Room 755, 6707 Democracy Boulevard, Bethesda, MD 20892–5452, (301) 594–7799, *ls38z@nih.gov.*

Name of Committee: National Institute of Diabetes and Digestive and Kidney Diseases Special Emphasis Panel, Seed Grant—Diabetic Complications.

Date: March 16, 2010.

Time: 1 p.m. to 3 p.m.

Agenda: To review and evaluate grant applications.

Place: National Institutes of Health, Two Democracy Plaza, 6707 Democracy Boulevard, Bethesda, MD 20892. (Telephone Conference Call).

Contact Person: Atul Sahai, PhD, Scientific Review Officer, Review Branch, DEA, NIDDK, National Institutes of Health, Room 759, 6707 Democracy Boulevard, Bethesda, MD 20892–5452, (301) 594–2242, *sahaia@niddk.nih.gov.*

Name of Committee: National Institute of Diabetes and Digestive and Kidney Diseases Special Emphasis Panel, Kidney Disease Ancillary Studies.

Date: March 24, 2010.

Time: 1 p.m. to 5 p.m.

Agenda: To review and evaluate grant applications.

Place: National Institutes of Health, Two Democracy Plaza, 6707 Democracy Boulevard, Bethesda, MD 20892. (Telephone Conference Call).

Contact Person: Atul Sahai, PhD, Scientific Review Officer, Review Branch, DEA, NIDDK, National Institutes of Health, Room 759, 6707 Democracy Boulevard, Bethesda, MD 20892–5452, (301) 594–2242, *sahaia@niddk.nih.gov.*

(Catalogue of Federal Domestic Assistance Program Nos. 93.847, Diabetes, Endocrinology and Metabolic Research; 93.848, Digestive Diseases and Nutrition Research; 93.849, Kidney Diseases, Urology and Hematology Research, National Institutes of Health, HHS)

Dated: February 1, 2010.

Jennifer Spaeth,

Director, Office of Federal Advisory Committee Policy.

[FR Doc. 2010–2569 Filed 2–4–10; 8:45 am]

BILLING CODE 4140–01–P

DEPARTMENT OF HEALTH AND HUMAN SERVICES

National Institutes of Health

National Institute of Allergy and Infectious Diseases; Notice of Closed Meeting

Pursuant to section 10(d) of the Federal Advisory Committee Act, as amended (5 U.S.C. App.), notice is hereby given of the following meeting.

The meeting will be closed to the public in accordance with the provisions set forth in sections 552b(c)(4) and 552b(c)(6), Title 5 U.S.C., as amended. The contract proposals and the discussions could disclose confidential trade secrets or commercial property such as patentable material, and personal information concerning individuals associated with the contract proposals, the disclosure of which would constitute a clearly unwarranted invasion of personal privacy.

Name of Committee: National Institute of Allergy and Infectious Diseases Special Emphasis Panel; Nonhuman Primate Cellular Immunology Core for HIV Vaccine Research.

Date: March 1, 2010.

Time: 12 p.m. to 3 p.m.

Agenda: To review and evaluate contract proposals.

Place: National Institutes of Health, Rockledge 6700, 6700B Rockledge Drive, Bethesda, MD 20817.

Contact Person: Erica L. Brown, PhD, Scientific Review Officer, Scientific Review Program, Division of Extramural Activities, National Institutes of Health/NIAID, 6700B Rockledge Drive, MSC 7616, Bethesda, MD 20892–7616, 301–451–2639, *ebrown@niaid.nih.gov.*

(Catalogue of Federal Domestic Assistance Program Nos. 93.855, Allergy, Immunology, and Transplantation Research; 93.856, Microbiology and Infectious Diseases Research, National Institutes of Health, HHS)

Dated: February 1, 2010.

Jennifer Spaeth,

Director, Office of Federal Advisory Committee Policy.

[FR Doc. 2010–2565 Filed 2–4–10; 8:45 am]

BILLING CODE 4140–01–P

DEPARTMENT OF HEALTH AND HUMAN SERVICES

National Institutes of Health

National Institute of Allergy and Infectious Diseases; Notice of Closed Meeting

Pursuant to section 10(d) of the Federal Advisory Committee Act, as amended (5 U.S.C. App.), notice is hereby given of the following meeting.

The meeting will be closed to the public in accordance with the provisions set forth in sections 552b(c)(4) and 552b(c)(6), Title 5 U.S.C., as amended. The grant applications and the discussions could disclose confidential trade secrets or commercial property such as patentable material, and personal information concerning individuals associated with the grant applications, the disclosure of which would constitute a clearly unwarranted invasion of personal privacy.

Name of Committee: National Institute of Allergy and Infectious Diseases Special Emphasis Panel RFA–AI–09–040 Protection of Human Health by Immunology and Vaccines U01.

Date: March 1–3, 2010.

Time: 8 a.m. to 6 p.m.

Agenda: To review and evaluate grant applications.

Place: Hyatt Regency Bethesda, One Bethesda Metro Center, 7400 Wisconsin Avenue, Lalique, Bethesda, MD 20814.

Contact Person: Quirijn Vos, PhD, Scientific Review Officer, Scientific Review Program, Division of Extramural Activities, NIH/NIAID/DHHS, 6700B Rockledge Drive, MSC 7616, Bethesda, MD 20892, 301–451–2666, *qvos@niaid.nih.gov.*

(Catalogue of Federal Domestic Assistance Program Nos. 93.855, Allergy, Immunology, and Transplantation Research; 93.856, Microbiology and Infectious Diseases Research, National Institutes of Health, HHS)

Dated: February 1, 2010.

Jennifer Spaeth,

Director, Office of Federal Advisory Committee Policy.

[FR Doc. 2010–2563 Filed 2–4–10; 8:45 am]

BILLING CODE 4140–01–P

DEPARTMENT OF HEALTH AND HUMAN SERVICES

National Institutes of Health

National Cancer Institute; Notice of Closed Meeting

Pursuant to section 10(d) of the Federal Advisory Committee Act, as amended (5 U.S.C. App.), notice is hereby given of a meeting of the Board of Scientific Counselors for Basic Sciences National Cancer Institute. The meeting will be closed to the public as indicated below in accordance with the provisions set forth in section 552b(c)(6), Title 5 U.S.C., as amended for the review, discussion, and evaluation of individual intramural programs and projects conducted by the National Cancer Institute, including consideration of personnel qualifications and performance, and the competence of individual investigators, the disclosure of which would constitute a clearly unwarranted invasion of personal privacy.

Name of Committee: Board of Scientific Counselors for Basic Sciences National Cancer Institute.

Date: March 15–16, 2010.

Time: March 15, 2010, 6 p.m. to 10 p.m.

Agenda: To review and evaluate personal qualifications and performance, and competence of individual investigators.

Place: Double Tree Hotel, 8120 Wisconsin Avenue, Bethesda, MD 20814.

Time: March 16, 2010, 9 p.m. to 2:30 p.m.

Agenda: To review and evaluate personal qualifications and performance, and competence of individual investigators.

Place: National Institutes of Health, National Cancer Institute, 9000 Rockville Pike, Building 31, Conference Room 6, Bethesda, MD 20814.

Contact Person: Florence E. Farber, PhD, Executive Secretary, Office of the Director, National Cancer Institute, National Institutes of Health, 6116 Executive Boulevard, Room 2205, Bethesda, MD 20892, 301–496–7628, *ff6p@nih.gov*.

In the interest of security, NIH has instituted stringent procedures for entrance onto the NIH campus. All visitor vehicles, including taxicabs, hotel, and airport shuttles will be inspected before being allowed on campus. Visitors will be asked to show one form of identification (for example, a government-issued photo ID, driver's license, or passport) and to state the purpose of their visit.

Information is also available on the Institute's/Center's home page: *http://deainfo.nci.nih.gov/advisory/bsc/bs/bs.htm,* where an agenda and any additional information for the meeting will be posted when available.

(Catalogue of Federal Domestic Assistance Program Nos. 93.392, Cancer Construction; 93.393, Cancer Cause and Prevention Research; 93.394, Cancer Detection and Diagnosis Research; 93.395, Cancer Treatment Research; 93.396, Cancer Biology Research; 93.397, Cancer Centers Support; 93.398, Cancer Research Manpower; 93.399, Cancer Control, National Institutes of Health, HHS)

Dated: January 29, 2010.

Jennifer Spaeth,

Director, Office of Federal Advisory Committee Policy.

[FR Doc. 2010–2436 Filed 2–4–10; 8:45 am]

BILLING CODE 4140–01–P

DEPARTMENT OF HEALTH AND HUMAN SERVICES

National Institutes of Health

National Institute of Environmental Health Sciences; Notice of Meeting

Pursuant to section 10(d) of the Federal Advisory Committee Act, as amended (5 U.S.C. App.), notice is hereby given of a meeting of the Board of Scientific Counselors, NIEHS.

The meeting will be open to the public as indicated below, with attendance limited to space available. Individuals who plan to attend and need special assistance, such as sign language interpretation or other reasonable accommodations, should notify the Contact Person listed below in advance of the meeting.

The meeting will be closed to the public as indicated below in accordance with the provisions set forth in section 552b(c)(6), Title 5 U.S.C., as amended for the review, discussion, and evaluation of individual intramural programs and projects conducted by the National Institute of Environmental Health Sciences, including consideration of personnel qualifications and performance, and the competence of individual investigators, the disclosure of which would constitute a clearly unwarranted invasion of personal privacy.

Name of Committee: Board of Scientific Counselors, NIEHS.

Date: February 28, 2010–March 2, 2010.

Closed: February 28, 2010, 7 p.m. to 10 p.m.

Agenda: To review and evaluate programmatic and personnel issues.

Place: Doubletree Guest Suites, 2515 Meridian Parkway, Research Triangle Park, NC 27713.

Open: March 1, 2010, 8:30 a.m. to 1 p.m.

Agenda: An overview of the organization and research in the Laboratory of Signal Transduction.

Place: Nat. Inst. of Environmental Health Sciences, Building 101, Rodbell Auditorium, 111 T. W. Alexander Drive, Conference Rooms 101 A, B, and C, Research Triangle Park, NC 27709.

Closed: March 1, 2010, 1 p.m. to 3:45 p.m.

Agenda: To review and evaluate programmatic and personnel issues.

Place: Nat. Inst. of Environmental Health Sciences, Building 101, Rodbell Auditorium, 111 T. W. Alexander Drive, Conference Rooms 101 A, B, and C, Research Triangle Park, NC 27709.

Open: March 1, 2010, 4 p.m. to 5:40 p.m.

Agenda: An overview of the organization and research in the Laboratory of Signal Transduction.

Place: Nat. Inst. of Environmental Health Sciences, Building 101, Rodbell Auditorium, 111 T. W. Alexander Drive, Conference Rooms 101 A, B, and C, Research Triangle Park, NC 27709.

Closed: March 1, 2010, 5:40 p.m. to 6:10 p.m.

Agenda: To review and evaluate programmatic and personnel issues.

Place: Nat. Inst. of Environmental Health Sciences, Building 101, Rodbell Auditorium, 111 T. W. Alexander Drive, Conference Rooms 101 A, B, and C, Research Triangle Park, NC 27709.

Closed: March 1, 2010, 7:30 p.m. to Adjournment.

Agenda: To review and evaluate programmatic and personnel issues.

Place: Doubletree Guest Suites, 2515 Meridian Parkway, Research Triangle Park, NC 27713.

Open: March 2, 2010, 8:30 a.m. to 10:10 a.m.

Agenda: An overview of the organization and research in the Laboratory of Signal Transduction.

Place: Nat. Inst. of Environmental Health Sciences, Building 101, Rodbell Auditorium, 111 T. W. Alexander Drive, Conference Rooms 101 A, B, and C, Research Triangle Park, NC 27709.

Closed: March 2, 2010, 10:30 a.m. to 1 p.m.

Agenda: To review and evaluate programmatic and personnel issues.

Place: Nat. Inst. of Environmental Health Sciences, Building 101, Rodbell Auditorium, 111 T. W. Alexander Drive, Conference Rooms 101 A, B, and C, Research Triangle Park, NC 27709.

Contact Person: John Pritchard, Acting Scientific Director, Office of the Director, National Institute of Environmental Health Sciences, 111 T.W. Alexander Drive, Research Triangle Park, NC 27709–2233, (919) 541–4054, *pritcha3@niehs.nih.gov.*

Any interested person may file written comments with the committee by forwarding the statement to the Contact Person listed on this notice. The statement should include the name, address, telephone number and when applicable, the business or professional affiliation of the interested person.

(Catalogue of Federal Domestic Assistance Program Nos. 93.115, Biometry and Risk Estimation—Health Risks from Environmental Exposures; 93.142, NIEHS Hazardous Waste Worker Health and Safety Training; 93.143, NIEHS Superfund Hazardous Substances—Basic Research and Education; 93.894, Resources and Manpower Development in the Environmental Health Sciences; 93.113, Biological Response to Environmental Health Hazards; 93.114, Applied Toxicological Research and Testing, National Institutes of Health, HHS)

Dated: January 27, 2010.

Jennifer Spaeth,

Director, Office of Federal Advisory Committee Policy.

[FR Doc. 2010–2433 Filed 2–4–10; 8:45 am]

BILLING CODE 4140–01–P

DEPARTMENT OF HEALTH AND HUMAN SERVICES

National Institutes of Health

Center for Scientific Review; Notice of Closed Meetings

Pursuant to section 10(d) of the Federal Advisory Committee Act, as amended (5 U.S.C. App.), notice is hereby given of the following meetings.

The meetings will be closed to the public in accordance with the provisions set forth in sections 552b(c)(4) and 552b(c)(6), Title 5 U.S.C., as amended. The grant applications and the discussions could disclose confidential trade secrets or commercial property such as patentable material, and personal information concerning

individuals associated with the grant applications, the disclosure of which would constitute a clearly unwarranted invasion of personal privacy.

Name of Committee: Center for Scientific Review Special Emphasis Panel, Gene and Drug Delivery.
Date: February 22, 2010.
Time: 2 p.m. to 4 p.m.
Agenda: To review and evaluate grant applications.
Place: National Institutes of Health, 6701 Rockledge Drive, Bethesda, MD 20892. (Telephone Conference Call).
Contact Person: Amy L. Rubinstein, PhD, Scientific Review Officer, Center for Scientific Review, National Institutes of Health, 6701 Rockledge Drive, Room 5152 MSC 7844, Bethesda, MD 20892. 301–435–1159. *rubinsteinal@csr.nih.gov.*

Name of Committee: Center for Scientific Review Special Emphasis Panel, Member Conflict: NPAS and PMDA Member Applications.
Date: February 25, 2010.
Time: 1 p.m. to 3:30 p.m.
Agenda: To review and evaluate grant applications.
Place: National Institutes of Health, 6701 Rockledge Drive, Bethesda, MD 20892. (Telephone Conference Call).
Contact Person: Suzan Nadi, PhD, Scientific Review Officer, Center for Scientific Review, National Institutes of Health, 6701 Rockledge Drive, Room 5217B, MSC 7846, Bethesda, MD 20892. 301–435–1259. *nadis@csr.nih.gov.*

Name of Committee: Center for Scientific Review Special Emphasis Panel, PAR07–379: Behavioral and Social Science Research on Understanding and Reducing Health Disparities.
Date: March 8, 2010.
Time: 8 a.m. to 5 p.m.
Agenda: To review and evaluate grant applications.
Place: Embassy Suites at the Chevy Chase Pavilion, 4300 Military Road, NW., Washington, DC 20015.
Contact Person: Michael Micklin, PhD, Scientific Review Officer, Center for Scientific Review, National Institutes of Health, 6701 Rockledge Drive, Room 3136, MSC 7759, Bethesda, MD 20892. (301) 435–1258. *micklinm@csr.nih.gov.*

Name of Committee: AIDS and Related Research Integrated Review Group, AIDS Molecular and Cellular Biology Study Section.
Date: March 8, 2010.
Time: 8 a.m. to 5 p.m.
Agenda: To review and evaluate grant applications.
Place: Bahia Resort Hotel, 998 West Mission Bay Drive, San Diego, CA 92109.
Contact Person: Kenneth A. Roebuck, PhD, Scientific Review Officer, Center for Scientific Review, National Institutes of Health, 6701 Rockledge Drive, Room 5214, MSC 7852, Bethesda, MD 20892. (301) 435–1166. *roebuckk@csr.nih.gov.*

Name of Committee: Center for Scientific Review Special Emphasis Panel, PAR09–154–155–156: Translational Research in Pediatric and Obstetric Pharmacology.
Date: March 8, 2010.
Time: 8 a.m. to 12 p.m.
Agenda: To review and evaluate grant applications.
Place: Doubletree Hotel Bethesda, (Formerly Holiday Inn Select), 8120 Wisconsin Avenue, Bethesda, MD 20814.
Contact Person: David Weinberg, PhD, Scientific Review Officer, Center for Scientific Review, National Institutes of Health, 6701 Rockledge Drive, Room 6170, MSC 7892, Bethesda, MD 20892. 301–435–1044. *David.Weinberg@nih.gov.*

Name of Committee: Center for Scientific Review Special Emphasis Panel, Topics in Bacterial Pathogenesis.
Date: March 8–9, 2010.
Time: 8 a.m. to 5 p.m.
Agenda: To review and evaluate grant applications.
Place: Hilton Alexandria Old Town, 1767 King Street, Alexandria,, VA 22314.
Contact Person: Rolf Menzel, PhD, Scientific Review Officer, Center for Scientific Review, National Institutes of Health, 6701 Rockledge Drive, Room 3196, MSC 7808, Bethesda, MD 20892. 301–435–0952. *menzelro@csr.nih.gov.*

Name of Committee: Center for Scientific Review Special Emphasis Panel, Small Business Grant Applications: Immunology.
Date: March 8–9, 2010.
Time: 8:30 a.m. to 6 p.m.
Agenda: To review and evaluate grant applications.
Place: Catamaran Resort, 3999 Mission Boulevard, San Diego, CA 92109.
Contact Person: Stephen M. Nigida, PhD, Scientific Review Officer, Center for Scientific Review, National Institutes of Health, 6701 Rockledge Drive, Room 4212, MSC 7812, Bethesda, MD 20892. 301–435–1222. *nigidas@csr.nih.gov.*

Name of Committee: Center for Scientific Review Special Emphasis Panel, HD–09–009: Fertility Preservation Research.
Date: March 8, 2010.
Time: 1 p.m. to 6 p.m.
Agenda: To review and evaluate grant applications.
Place: Doubletree Hotel Bethesda, (Formerly Holiday Inn Select), 8120 Wisconsin Avenue, Bethesda, MD 20814.
Contact Person: David Weinberg, PhD, Scientific Review Officer, Center for Scientific Review, National Institutes of Health, 6701 Rockledge Drive, Room 6170, MSC 7892, Bethesda, MD 20892. 301–435–1044. *David.Weinberg@nih.gov.*

Name of Committee: Center for Scientific Review Special Emphasis Panel, Fellowships: Diversity Program.
Date: March 9, 2010.
Time: 8 a.m. to 4 p.m.
Agenda: To review and evaluate grant applications.
Place: Hyatt Regency Bethesda, One Bethesda Metro Center, 7400 Wisconsin Avenue, Bethesda, MD 20814.
Contact Person: Peter J. Perrin, PhD, Scientific Review Officer, Center for Scientific Review, National Institutes of Health, 6701 Rockledge Drive, Room 2180, MSC 7818, Bethesda, MD 20892. (301) 435–0682. *perrinp@csr.nih.gov.*

Name of Committee: Center for Scientific Review Special Emphasis Panel, Member Conflicts: Lung Physiology.
Date: March 9–10, 2010.
Time: 9 a.m. to 6 p.m.
Agenda: To review and evaluate grant applications.
Place: National Institutes of Health, 6701 Rockledge Drive, Bethesda, MD 20892. (Virtual Meeting.)
Contact Person: George M. Barnas, PhD, Scientific Review Officer, Center for Scientific Review, National Institutes of Health, 6701 Rockledge Drive, Room 4220, MSC 7818, Bethesda, MD 20892. 301–435–0696. *barnasg@csr.nih.gov.*

Name of Committee: Center for Scientific Review Special Emphasis Panel, Member Conflict: Cell Biology.
Date: March 9, 2010.
Time: 1 p.m. to 3 p.m.
Agenda: To review and evaluate grant applications.
Place: National Institutes of Health, 6701 Rockledge Drive, Bethesda, MD 20892. (Telephone Conference Call.)
Contact Person: Steven Nothwehr, PhD, Scientific Review Officer, Center for Scientific Review, National Institutes of Health, 6701 Rockledge Drive, Room 5183, MSC 7840, Bethesda, MD 20892. 301.408.9435. *nothwehrs@mail.nih.gov.*

Name of Committee: Center for Scientific Review Special Emphasis Panel, Fellowship: Cell Biology and Development.
Date: March 11–12, 2010.
Time: 8 a.m. to 5 p.m.
Agenda: To review and evaluate grant applications.
Place: Embassy Suites at the Chevy Chase Pavilion, 4300 Military Road, NW., Washington, DC 20015.
Contact Person: Alessandra M. Bini, PhD, Scientific Review Officer, Center for Scientific Review, National Institutes of Health, 6701 Rockledge Drive, Room 5142, MSC 7840, Bethesda, MD 20892. 301–435–1024. *binia@csr.nih.gov.*

Name of Committee: Center for Scientific Review Special Emphasis Panel, Fellowship: Neurodevelopment, Synaptic Plasticity and Neurodegeneration.
Date: March 11–12, 2010.
Time: 8 a.m. to 6 p.m.
Agenda: To review and evaluate grant applications.
Place: Dupont Hotel, 1500 New Hampshire Avenue, NW., Washington, DC 20036.
Contact Person: Vilen A. Movsesyan, PhD, Scientific Review Officer, Center for Scientific Review, National Institutes of Health, 6701 Rockledge Drive, Room 4040M, MSC 7806, Bethesda, MD 20892. 301–402–7278. *movsesyanv@csr.nih.gov.*

Name of Committee: Center for Scientific Review Special Emphasis Panel, Fellowships: Healthcare Delivery and Methodologies.
Date: March 11, 2010.
Time: 8 a.m. to 5 p.m.
Agenda: To review and evaluate grant applications.
Place: The Fairmont San Francisco, 950 Mason Street, San Francisco, CA 94108.
Contact Person: Katherine N. Bent, PhD, Chief, Healthcare Delivery and

Methodologies IRG, Center for Scientific Review, National Institutes of Health, 6701 Rockledge Drive, Room 3160, MSC 7770, Bethesda, MD 20892. (301) 435–0695. *bentkn@csr.nih.gov.*

Name of Committee: Center for Scientific Review Special Emphasis Panel, Small Business—Respiratory Sciences.

Date: March 11–12, 2010.

Time: 9 a.m. to 5 p.m.

Agenda: To review and evaluate grant applications.

Place: National Institutes of Health, 6701 Rockledge Drive, Bethesda, MD 20892. (Virtual Meeting.)

Contact Person: Ghenima Dirami, PhD, Scientific Review Officer, Center for Scientific Review, National Institutes of Health, 6701 Rockledge Drive, Room 4122, MSC 7814, Bethesda, MD 20892. 301–594–1321. *diramig@csr.nih.gov.*

Name of Committee: Center for Scientific Review Special Emphasis Panel, Member Conflicts: Cell Biology.

Date: March 11, 2010.

Time: 2 p.m. to 4 p.m.

Agenda: To review and evaluate grant applications.

Place: National Institutes of Health, 6701 Rockledge Drive, Bethesda, MD 20892. (Telephone Conference Call.)

Contact Person: Alexandra M. Ainsztein, PhD, Scientific Review Officer, Center for Scientific Review, National Institutes of Health, 6701 Rockledge Drive, Room 5144, MSC 7840, Bethesda, MD 20892. 301–451–3848. *ainsztea@csr.nih.gov.*

Name of Committee: Center for Scientific Review Special Emphasis Panel, Fellowship: Psychopathology, Developmental Disabilities, Stress and Aging.

Date: March 12, 2010.

Time: 8 a.m. to 6 p.m.

Agenda: To review and evaluate grant applications.

Place: St. Gregory Hotel, 2033 M Street, NW., Washington, DC 20036.

Contact Person: Cheri Wiggs, PhD, Scientific Review Officer, Center for Scientific Review, National Institutes of Health, 6701 Rockledge Drive, Room 3180, MSC 7848, Bethesda, MD 20892. (301) 435–1261. *wiggsc@csr.nih.gov.*

(Catalogue of Federal Domestic Assistance Program Nos. 93.306, Comparative Medicine; 93.333, Clinical Research, 93.306, 93.333, 93.337, 93.393–93.396, 93.837–93.844, 93.846–93.878, 93.892, 93.893, National Institutes of Health, HHS)

Dated: January 29, 2010.

Jennifer Spaeth,

Director, Office of Federal Advisory Committee Policy.

[FR Doc. 2010–2558 Filed 2–4–10; 8:45 am]

BILLING CODE 4140–01–P

DEPARTMENT OF HEALTH AND HUMAN SERVICES

National Institutes of Health

National Institute of Arthritis and Musculoskeletal and Skin Diseases; Notice of Closed Meetings

Pursuant to section 10(d) of the Federal Advisory Committee Act, as amended (5 U.S.C. App.), notice is hereby given of the following meetings.

The meetings will be closed to the public in accordance with the provisions set forth in sections 552b(c)(4) and 552b(c)(6), Title 5 U.S.C., as amended. The grant applications and the discussions could disclose confidential trade secrets or commercial property such as patentable material, and personal information concerning individuals associated with the grant applications, the disclosure of which would constitute a clearly unwarranted invasion of personal privacy.

Name of Committee: National Institute of Arthritis and Musculoskeletal and Skin Diseases Special Emphasis Panel, Ancillary Clinical Studies.

Date: February 16, 2010.

Time: 1 p.m. to 3 p.m.

Agenda: To review and evaluate grant applications.

Place: National Institutes of Health, One Democracy Plaza, 6701 Democracy Boulevard, Suite 800, Bethesda, MD 20892, (Telephone Conference Call).

Contact Person: Charles H Washabaugh, PhD, Scientific Review Officer, Review Branch, NIAMS/NIH, 6701 Democracy Blvd., Suite 800, Bethesda, MD 20892, (301) 594–4952, *washabac@mail.nih.gov.*

Name of Committee: National Institute of Arthritis and Musculoskeletal and Skin Diseases Special Emphasis Panel, Career Development, Research Training & Pathways to Independence Review.

Date: March 1, 2010.

Time: 1:30 p.m. to 5 p.m.

Agenda: To review and evaluate grant applications.

Place: National Institutes of Health, Two Democracy Plaza, 6701 Democracy Boulevard, Bethesda, MD 20892, (Telephone Conference Call).

Contact Person: Charles H Washabaugh, PhD, Scientific Review Officer, Review Branch, NIAMS/NIH, 6701 Democracy Blvd., Suite 800, Bethesda, MD 20892, (301) 594–4952, *washabac@mail.nih.gov.*

Any interested person may file written comments with the committee by forwarding the statement to the Contact Person listed on this notice. The statement should include the name, address, telephone number and when applicable, the business or professional affiliation of the interested person.

(Catalogue of Federal Domestic Assistance Program Nos. 93.846, Arthritis, Musculoskeletal and Skin Diseases Research, National Institutes of Health, HHS)

Dated: January 29, 2010.

Jennifer Spaeth,

Director, Office of Federal Advisory Committee Policy.

[FR Doc. 2010–2560 Filed 2–4–10; 8:45 am]

BILLING CODE 4140–01–P

DEPARTMENT OF HOMELAND SECURITY

Federal Emergency Management Agency

[Internal Agency Docket No. FEMA–3307–EM; Docket ID FEMA–2010–0002]

Arizona; Emergency and Related Determinations

AGENCY: Federal Emergency Management Agency, DHS.

ACTION: Notice.

SUMMARY: This is a notice of the Presidential declaration of an emergency for the State of Arizona (FEMA–3307–EM), dated January 24, 2010 and related determinations.

DATES: *Effective Date:* January 24, 2010.

FOR FURTHER INFORMATION CONTACT: Peggy Miller, Disaster Assistance Directorate, Federal Emergency Management Agency, 500 C Street, SW., Washington, DC 20472, (202) 646–3886.

SUPPLEMENTARY INFORMATION: Notice is hereby given that, in a letter dated January 24, 2010, the President issued an emergency declaration under the authority of the Robert T. Stafford Disaster Relief and Emergency Assistance Act, 42 U.S.C. 5121–5207 (the Stafford Act), as follows:

I have determined that the emergency conditions in certain areas of the State of Arizona resulting from a severe winter storm beginning on January 20, 2010, and continuing, are of sufficient severity and magnitude to warrant an emergency declaration under the Robert T. Stafford Disaster Relief and Emergency Assistance Act, 42 U.S.C. 5121 et seq. ("the Stafford Act"). Therefore, I declare that such an emergency exists in the State of Arizona.

You are authorized to provide appropriate assistance for required emergency measures, authorized under Title V of the Stafford Act, to save lives and to protect property and public health and safety, and to lessen or avert the threat of a catastrophe in the designated areas. Specifically, you are authorized to provide assistance for emergency protective measures (Category B), limited to direct Federal assistance, under the Public Assistance program. This assistance excludes regular time costs for subgrantees' regular employees.

Consistent with the requirement that Federal assistance is supplemental, any Federal funds provided under the Stafford Act for Public Assistance will be limited to

75 percent of the total eligible costs. In order to provide Federal assistance, you are hereby authorized to allocate from funds available for these purposes such amounts as you find necessary for Federal emergency assistance and administrative expenses.

Further, you are authorized to make changes to this declaration for the approved assistance to the extent allowable under the Stafford Act.

The Federal Emergency Management Agency (FEMA) hereby gives notice that pursuant to the authority vested in the Administrator, Department of Homeland Security, under Executive Order 12148, as amended, Mark A Neveau, of FEMA is appointed to act as the Federal Coordinating Officer for this declared emergency.

The following areas of the State of Arizona have been designated as adversely affected by this declared emergency:

Apache, Coconino, and Navajo Counties, and the Hopi Tribe and Navajo Nation within these counties for emergency protective measures (Category B), limited to direct Federal assistance, under the Public Assistance program.

The following Catalog of Federal Domestic Assistance Numbers (CFDA) are to be used for reporting and drawing funds: 97.030, Community Disaster Loans; 97.031, Cora Brown Fund; 97.032, Crisis Counseling; 97.033, Disaster Legal Services; 97.034, Disaster Unemployment Assistance (DUA); 97.046, Fire Management Assistance Grant; 97.048, Disaster Housing Assistance to Individuals and Households In Presidentially Declared Disaster Areas; 97.049, Presidentially Declared Disaster Assistance—Disaster Housing Operations for Individuals and Households; 97.050, Presidentially Declared Disaster Assistance to Individuals and Households—Other Needs; 97.036, Disaster Grants—Public Assistance (Presidentially Declared Disasters); 97.039, Hazard Mitigation Grant.

W. Craig Fugate,

Administrator, Federal Emergency Management Agency.

[FR Doc. 2010–2480 Filed 2–4–10; 8:45 am]

BILLING CODE 9111–23–P

DEPARTMENT OF HOUSING AND URBAN DEVELOPMENT

[Docket No. FR–5375–N–05]

Federal Property Suitable as Facilities to Assist the Homeless

AGENCY: Office of the Assistant Secretary for Community Planning and Development, HUD.

ACTION: Notice.

SUMMARY: This Notice identifies unutilized, underutilized, excess, and surplus Federal property reviewed by HUD for suitability for possible use to assist the homeless.

DATES: *Effective Date:* February 5, 2010.

FOR FURTHER INFORMATION CONTACT: Kathy Ezzell, Department of Housing and Urban Development, 451 Seventh Street, SW., Room 7262, Washington, DC 20410; telephone (202) 708–1234; TTY number for the hearing- and speech-impaired (202) 708–2565, (these telephone numbers are not toll-free), or call the toll-free Title V information line at 800–927–7588.

SUPPLEMENTARY INFORMATION: In accordance with the December 12, 1988 court order in *National Coalition for the Homeless* v. *Veterans Administration,* No. 88–2503–OG (D.D.C.), HUD publishes a Notice, on a weekly basis, identifying unutilized, underutilized, excess and surplus Federal buildings and real property that HUD has reviewed for suitability for use to assist the homeless. Today's Notice is for the purpose of announcing that no additional properties have been determined suitable or unsuitable this week.

Dated: January 28, 2009.

Mark R. Johnston,

Deputy Assistant Secretary for Special Needs.

[FR Doc. 2010–2209 Filed 2–4–10; 8:45 am]

BILLING CODE 4210–67–P

DEPARTMENT OF HOUSING AND URBAN DEVELOPMENT

[Docket No. FR–5300–FA–33]

Announcement of Funding Awards for Fiscal Year 2009 for the Housing Choice Voucher Program

AGENCY: Office of the Assistant Secretary for Public and Indian Housing, HUD.

ACTION: Announcement of Fiscal Year 2009 awards.

SUMMARY: In accordance with Section 102(a)(4)(C) of the Department of Housing and Urban Development Reform Act of 1989, this document notifies the public of funding awards for Fiscal Year (FY) 2009 to housing agencies (HAs) under the Section 8 housing choice voucher program. The purpose of this notice is to publish the names, addresses, and the amount of the awards to HAs for non-competitive funding awards for housing conversion actions, public housing relocations and replacements, moderate rehabilitation replacements, and HOPE VI voucher awards.

FOR FURTHER INFORMATION CONTACT: Danielle Bastarache, Director, Office of Housing Voucher Programs, Office of Public and Indian Housing, Department of Housing and Urban Development, 451 Seventh Street, SW., Room 4228, Washington, DC 20410–5000, telephone (202) 402–0477. Hearing- or speech-impaired individuals may call HUD's TTY number at (800) 927–7589. (Only the "800" telephone number is toll-free.)

SUPPLEMENTARY INFORMATION: The regulations governing the housing choice voucher program are published at 24 CFR 982. The regulations for allocating housing assistance budget authority under Section 213(d) of the Housing and Community Development Act of 1974 are published at 24 CFR part 791, subpart D.

The purpose of this rental assistance program is to assist eligible families to pay their rent for decent, safe, and sanitary housing. The FY 2009 awardees announced in this notice were provided Section 8 funds on an as-needed, non-competitive basis, i.e., not consistent with the provisions of a Notice of Funding Availability (NOFAs). Tenant protection voucher awards made to PHAs for program actions that displace families living in public housing were made on a first-come, first-served basis in accordance with PIH Notice 2007–10, Voucher Funding in Connection with the Demolition or Disposition of Occupied Public Housing Units. Announcements of awards provided under the NOFA process for Mainstream, Designated Housing, Family Unification (FUP), and Veterans Assistance Supportive Housing (VASH) programs will be published in a separate **Federal Register** notice.

Awards published under this notice were provided (1) to assist families living in HUD-owned properties that are being sold; (2) to assist families affected by the expiration or termination of their project-based Section 8 and moderate rehabilitation contracts; (3) to assist families in properties where the owner has prepaid the HUD mortgage; (4) to provide relocation housing assistance in connection with the demolition of public housing; (5) to provide replacement housing assistance for single room occupancy (SRO) units that fail housing quality standards (HQS); and (6) to assist families in public housing developments that are scheduled for demolition in connection with a HUD-approved HOPE VI Revitalization or Demolition Grant. Additionally, housing choice vouchers were awarded to PHAs administering assistance to families that resided in certain Office of Multifamily Housing properties at the time of Hurricane Katrina or Rita. Some families were

eligible to receive voucher assistance because owners of these properties subsequently decided to prepay the preservation eligible mortgage or the Section 8 project-based contract was terminated or not renewed.

A special housing fee of $200 per occupied unit was provided to PHAs to compensate the PHA for any extraordinary Section 8 administrative costs associated with the Multifamily housing conversion action.

In FY 2008, some PHAs were awarded housing choice vouchers in connection with a public housing demolition/disposition plan and were authorized to use their available net restricted assets (NRA) to offset the required budget authority for units requested, if the PHA had reported a significant accumulation of unspent housing assistance payment funds available. It was later discovered that four of these PHAs misreported their NRA, and consequently, did not have NRA available to fund the units authorized. Therefore, budget authority was provided in FY 2009 to support the vouchers awarded in FY 2008 to the Montgomery (AL006), Los Angeles County (CA004), Omaha (NE001), Las Vegas (NV002), and San Antonio (TX006) Housing Authorities. These PHAs are included in this list with awards of BA with minimal units. No PHAs were authorized to use the NRA to offset awards made in FY 2009.

The Department awarded total new budget authority of $167,165,850 for 21,098 housing choice vouchers to recipients under all of the above-mentioned categories.

In accordance with Section 102(a)(4)(C) of the Department of Housing and Urban Development Reform Act of 1989 (103 Stat. 1987, 42 U.S.C. 3545), the Department is publishing the names, addresses, and amounts of those awards as shown in Appendix A alphabetically by State then by PHA name.

Dated: January 20, 2010.

Sandra B. Henriquez,

Assistant Secretary for Public and Indian Housing.

SECTION 8 RENTAL ASSISTANCE PROGRAMS ANNOUNCEMENT OF AWARDS FOR FISCAL YEAR 2009

Housing agency	Address	Units	Award
	Public Housing Tenant Protection Mod Rehab Replacements		
COUNTY OF LOS ANGELES HA	2 CORAL CIRCLE, MONTEREY PARK, CA 93907	94	959,003
OAKLAND HA	1619 HARRISON ST, OAKLAND, CA 94612	6	86,724
CITY OF LOS ANGELES HA	2600 WILSHIRE BLVD, 3RD FL, LOS ANGELES, CA 90057	7	67,816
TULARE COUNTY HA	5140 W. CYPRESS AVE, VISALIA, CA 93279	1	14,454
COUNTY OF MONTEREY HA	123 RICO STREET, SALINAS, CA 93907	28	217,063
SAN JOSE HA	505 WEST JULIAN STREET, SAN JOSE, CA 95110	6	82,195
SANTA CLARA COUNTY HA	505 WEST JULIAN ST, SAN JOSE, CA 95110	4	55,636
ALAMEDA COUNTY HA	22941 ATHERTON STREET, HAYWARD, CA 94541	4	49,793
SANTA CRUZ COUNTY HA	2931 MISSION ST, SANTA CRUZ, CA 95060	3	32,145
WATERBURY HA	2 LAKEWOOD ROAD, WATERBURY, CT 06704	4	27,326
DISTRICT OF COLUMBIA HA	1133 NORTH CAPITOL STREET NE, WASHINGTON, DC 20002.	42	495,472
MIAMI DADE HA	1401 NW 7TH STREET, MIAMI, FL 33125	26	235,922
HA OF ATLANTA	230 JOHN WESLEY DOBBS AVE, NE, ATLANTA, GA 30303	40	393,995
CITY OF DES MOINES MUN HSG	100 EAST EUCLID, STE 101, DES MOINES, IA 50313	6	27,797
CHICAGO HA	60 EAST VAN BUREN ST, 11TH FL, CHICAGO, IL 60605	7	66,459
NEW ORLEANS HA	4100 TOURO STREET, NEW ORLEANS, LA 70122	3	32,767
COMM DEV PROG COMM OF MA, EOCD.	100 CAMBRIDGE STREET, BOSTON, MA 02114	9	94,729
MD DEPT OF HSG & COMM AFFAIRS	100 COMMUNITY PLACE, CROWNSVILLE, MD 21032	24	160,736
MAINE STATE HA	353 WATER STREET, AUGUSTA, ME 04330	8	50,352
ST. LOUIS HA	3520 PAGE BOULEVARD, ST. LOUIS, MO 63106	26	163,532
ST. FRANCOIS COUNTY PHA	P.O. BOX N, PARK HILLS, MO 63601	2	7,656
MISSISSIPPI REGIONAL HA VI	P.O. DRAWER 8746, JACKSON, MS 39284	29	155,009
MT DEPARTMENT OF COMMERCE	301 S. PARK, HELENA, MT 59620	12	51,022
GLOUCESTER HA	100 POP MOYLAN BOULEVARD, DEPTFORD, NJ 08096	9	68,784
ALBUQUERQUE HA	1840 UNIVERSITY BLVD, SE, ALBUQUERQUE, NM 87106	5	26,409
ALBANY HA	200 SOUTH PEARL, ALBANY, NY 12202	12	63,338
HA OF LOCKPORT	301 MICHIGAN ST, LOCKPORT, NY 14094	5	19,393
TOWN OF AMHERST	1195 MAIN STREET, BUFFALO, NY 14209	13	57,807
THE CITY OF NEW YORK DHPD	100 GOLD STREET, ROOM 501, NEW YORK, NY 10007	106	1,480,914
CITY OF NEW ROCHELLE	515 NORTH AVENUE, NEW ROCHELLE, NY 10801	16	165,694
CUYAHOGA MHA	1441 WEST 25TH STREET, CLEVELAND, OH 44113	36	233,392
CINCINNATI METRO HA	16 WEST CENTRAL PARKWAY, CINCINNATI, OH 45210	5	29,867
HA OF PORTLAND	135 SW ASH STREET, PORTLAND, OR 97204	50	351,084
COOS–CURRY HA	1700 MONROE, NORTH BEND, OR 97459	31	123,452
HA OF THE CITY OF PITTSBURGH	200 ROSS STREET, PITTSBURGH, PA 15219	3	19,492
PHILADELPHIA HA	12 SOUTH 23RD STREET, PHILADELPHIA, PA 19103	40	258,186
REDEV AUTH OF CITY OF LANCASTER.	202 NORTH PRINCE ST, STE 400, LANCASTER, PA 17603	7	39,210
MUNICIPALITY OF VEGA BAJA	PO BOX 4555, VEGA BAJA, PR 00694	45	239,396
MUNICIPALITY OF VIEQUES	CALLE CARLOS LEBRUN #449, VIEQUES, PR 00765	10	48,848
HA OF COLUMBIA	1917 HARDEN STREET, COLUMBIA, SC 29204	2	11,051
HSG & COM REDEV AUTH	P.O. DRAWER 969, FLORENCE, SC 29503	7	23,717
SC STATE HSG FINANCE & DEV	300–C OUTLET POINTE BLVD, COLUMBIA, SC 29210	36	182,571
SIOUX FALLS HSG & REDEV	630 SOUTH MINNESOTA, SIOUX FALLS, SD 57104	7	36,135
HOUSTON HA	2640 FOUNTAIN VIEW, HOUSTON, TX 77057	14	102,762
SAN ANTONIO HA	818 S. FLORES STREET, SAN ANTONIO, TX 78295	19	130,512

SECTION 8 RENTAL ASSISTANCE PROGRAMS ANNOUNCEMENT OF AWARDS FOR FISCAL YEAR 2009—Continued

Housing agency	Address	Units	Award
PANHANDLE COMM SERVICES	1309 W. 8TH ST, AMARILLO, TX 79120	21	93,301
ROANOKE REDEV & HA	2624 SALEM TRNPK, NW, ROANOKE, VA 24017	4	19,199
CITY OF VIRGINIA BEACH	2424 COURTHOUSE DR, VIRGINIA BEACH, VA 23456	10	73,176
VERMONT STATE HA	ONE PROSPECT STREET, MONTPELIER, VT 05602	46	251,839
CHARLESTON/KANAWHA HA	1525 WASHINGTON ST. WEST, CHARLESTON, WV 25321	11	52,090
HA OF CITY OF BLUEFIELD	P.O. BOX 1475, BLUEFIELD, WV 24701	12	40,464
Total for Mod Rehab Replacements		973	$7,769,686
PH Relocations/Replacements			
HA OF CITY OF MONTGOMERY	1020 BELL ST, MONTGOMERY, AL 36104	227	1,405,710
HA OF HUNTSVILLE	P.O. BOX 486, HUNTSVILLE, AL 35804	138	694,708
HA OF TUSCALOOSA	P.O. BOX 2281, TUSCALOOSA, AL 35403	120	550,915
HA OF BESSEMER	P.O. BOX 1390, BESSEMER, AL 35021	60	382,364
CITY OF LOS ANGELES HA	2600 WILSHIRE BLVD, 3RD FL, LOS ANGELES, CA 90057	651	5,841,656
OAKLAND HA	1619 HARRISON ST, OAKLAND, CA 94612	1,528	8,235,248
COUNTY OF SANTA BARBARA HA	815 W OCEAN, LOMPOC, CA 93438	41	361,432
CITY OF ALAMEDA HA	701 ATLANTIC AVENUE, ALAMEDA, CA 94501	120	1,391,068
ALAMEDA COUNTY HA	22941 ATHERTON STREET, HAYWARD, CA 94541	148	1,842,352
LOVELAND HA	375 W. 37TH ST, STE 200, LOVELAND, CO 80538	80	538,032
MERIDEN HA	22 CHURCH STREET, MERIDEN, CT 06450	66	600,534
HA OF WEST PALM BEACH GEN FUND.	1715 DIVISION AVENUE, WEST PALM BEACH, FL 33407	36	341,207
HA OF FORT LAUDERDALE CITY	437 SW 4TH AVENUE, FORT LAUDERDALE, FL 33315	21	200,461
CITY OF LAKELAND HA	430 S. HARTSELL AVENUE, LAKELAND, FL 33815	133	724,538
HA OF PAHOKEE INC	465 FRIEND TERRACE, PAHOKEE, FL 33476	40	331,843
HA OF ATLANTA	230 JOHN WESLEY DOBBS AVE NE, ATLANTA, GA 30303	1,555	15,493,959
HA OF AUGUSTA	1435 WALTON WAY, AUGUSTA, GA 30914	248	1,509,219
HA OF MARIETTA	95 COLE STREET, MARIETTA, GA 30061	207	1,717,040
HA OF THE CITY OF DECATOR	750 COMMERCE DRIVE, STE 110, DECATUR, GA 30030	40	299,126
HA OF AMERICUS	825 N MAYO STREET, AMERICUS, GA 31709	100	422,508
HA OF THE CITY OF EAST POINT	1600 CONALLY DR, EAST POINT, GA	92	586,025
NORTHWEST GEORGIA HA	800 NORTH FIFTH AVENUE, ROME, GA 30162	136	601,688
CHICAGO HA	60 EAST VAN BUREN ST, 11TH FL, CHICAGO, IL 60605	1,121	10,739,539
MENARD COUNTY HA	PO BOX 168, PETERSBURG, IL 62675	13	62,194
CHRISTIAN CTY HA	PO BOX 86, PANA, IL 62557	91	283,407
LOUISVILLE HA	420 SOUTH EIGHTH STREET, LOUISVILLE, KY 40203	67	461,842
FITCHBURG HA	50 DAY STREET, FITCHBURG, MA 01420	22	146,731
HA OF THE CITY OF ANNAPOLIS	1217 MADISON STREET, ANNAPOLIS, MD 21403	40	428,668
HA OF BALTIMORE CITY	417 EAST FAYETTE STREET, BALTIMORE, MD 21201	827	6,773,355
METRO COUNCIL HRA	390 ROBERT STREET NORTH, ST. PAUL, MN 55101	150	1,070,046
SCOTT COUNTY CDA	323 SOUTH NAUMKEAG STREET, SHAKOPEE, MN 55379	53	433,873
MISSOULA HA	1235 34TH STREET, MISSOULA, MT 59801	20	104,955
BURLEIGH COUNTY HA	410 SOUTH 2ND STREET, BISMARCK, ND 58504	18	71,362
OMAHA HA	540 SOUTH 27TH STREET, OMAHA, NE 68105	161	533,808
NEWARK HA	57 SUSSEX AVENUE, NEWARK, NJ 07103	696	6,432,126
ORANGE CITY HA	340 THOMAS BOULEVARD, ORANGE, NJ 07050	140	1,230,012
CITY OF LAS VEGAS HA	420 N. 10TH STREET, LAS VEGAS, NV 89125	336	2,998,316
COLUMBUS METRO HA	880 EAST 11TH AVENUE, COLUMBUS, OH 43211	693	4,211,471
AKRON METRO HA	100 W. CEDAR STREET, AKRON, OH 44307	170	967,368
HA OF THE CITY OF SALEM	PO BOX 808, SALEM, OR 97308	30	146,984
ARMSTRONG COUNTY HA	350 S. JEFFERSON STREET, KITTANNING, PA 16201	17	72,030
SHELBY COUNTY HA	715 ROUGE BLUFF AVE, MEMPHIS, TN 28127	100	620,076
SAN ANTONIO HA	818 S. FLORES STREET, SAN ANTONIO, TX 78295	240	1,714,999
TEXAS CITY HA	817 SECOND AVENUE NORTH, TEXAS CITY, TX 77590	56	356,832
PHARR HA	211 W AUDREY, PHARR, TX 78577	100	374,604
KINGSVILLE HA	P.O. BOX 847, KINGSVILLE, TX 78363	78	367,436
RICHMOND REDEV & HA	901 CHAMBERLAYNE PARKWAY, RICHMOND, VA 23456	0	17,059
HA OF THE CITY OF	2500 MAIN STREET, STE 200, VANCOUVER, WA 98660	89	528,116
CHARLESTON/KANAWHA HA	1525 WASHINGTON ST. WEST, CHARLESTON, WV 25321	50	243,936
Total for PH Relocations/Replacements.		7,018	$51,462,247
SRO Relocations/Replacements			
SANTA CLARA COUNTY HA	505 WEST JULIAN ST, SAN JOSE, CA 95110	95	543,372
HA OF THE CITY OF SALEM	PO BOX 808, SALEM, OR 97308	21	100,435
RICHMOND REDEV & HA	901 CHAMBERLAYNE PARKWAY, RICHMOND, VA 23456	39	269,886

SECTION 8 RENTAL ASSISTANCE PROGRAMS ANNOUNCEMENT OF AWARDS FOR FISCAL YEAR 2009—Continued

Housing agency	Address	Units	Award
Total for SRO Relocations/Replacements.		155	$913,693
Witness Relocation			
COUNTY OF SACRAMENTO HSG	P.O. BOX 1834, SACRAMENTO, CA 95812	1	19,080
HA OF CITY OF LAKEWOOD	445 S. ALLISON PARKWAY, LAKEWOOD, CO 80226	1	14,244
AURORA HA	10745 E KENTUCKY AVENUE, AURORA, CO 80012	2	24,924
HA OF MIAMI BEACH	200 ALTON ROAD, MIAMI BEACH, FL 33139	1	10,176
MONTGOMERY CO HA	10400 DETRICK AVENUE, KENSINGTON, MD 20895	12	211,311
BUCKS COUNTY HA	350 SOUTH MAIN STREET, STE 205, DOYLESTOWN, PA 18901.	1	13,644
CHESAPEAKE REDEV & HA	1468 S. MILITARY HWY, CHESAPEAKE, VA 23327	1	9,888
Total for Witness Relocation		19	$303,267
Total for Public Housing Tenant Protection.		12,312	$94,449,424
Housing Tenant Protection Disaster Voucher Program to Tenant-based Voucher Conversions			
HA OF THE CITY AND CO OF DENVER.	777 GRANT STREET, DENVER, CO 80203	1	8,816
HA OF POMPANO BEACH	321 WEST ATLANTIC BLVD, POMPANO BEACH, FL 33061	1	11,189
HA OF TALLAHASSEE	2940 GRADY ROAD, TALLAHASSEE, FL 32312	1	7,552
HA OF DELRAY BEACH	600 N CONGRESS, STE 310B, DELRAY BEACH, FL 33445	1	8,749
HA FULTON COUNTY	4273 WENDELL DRIVE, SW, ATLANTA, GA 30336	2	17,872
NEW ORLEANS HA	4100 TOURO STREET, NEW ORLEANS, LA 70122	27	294,902
EAST BATON ROUGE PHA	4731 NORTH BLVD, BATON ROUGE, LA 70806	7	49,173
LAFAYETTE (CITY) HA	100 C O CIRCLE, LAFAYETTE, LA 70501	1	4,196
ASCENSION PARISH SEC 8 HA	213 EAST BLVD, BATON ROUGE, LA 70802	2	10,803
KENNER HA	1013 31ST STREET, KENNER, LA 70065	83	767,020
JEFFERSON PARISH HA	1718 BETTY STREET, MARRERO, LA 70072	190	1,680,702
CONCORDIA PARISH POLICE JURY	4001 CARTER STREET, ROOM 1, VIDALIA, LA 71373	2	5,014
ST JOHN THE BAPTIST PARISH HA	152 JOE PARQUET CIRCLE, LAPLACE, LA 70068	2	18,406
MISSISSIPPI REGIONAL HA VIII	P.O. BOX 2347, GULFPORT, MS 39505	3	17,827
JACKSON HOUS AUTH	2747 LIVINGSTON ROAD, JACKSON, MS 39283	1	5,858
HA OF WINSTON–SALEM	500 WEST FOURTH ST, STE 300, WINSTON–SALEM, NC 27101.	1	5,678
HA OF COUNTY OF WAKE	100 SHANNON STREET, ZEBULON, NC 27597	2	16,464
AUSTIN HA	P.O. BOX 6159, AUSTIN, TX 78762	1	8,518
HOUSTON HA	2640 FOUNTAIN VIEW, HOUSTON, TX 77057	19	139,463
SAN ANTONIO HA	818 S. FLORES STREET, SAN ANTONIO, TX 78295	7	48,314
HA OF DALLAS	3939 N. HAMPTON RD, DALLAS, TX 75212	8	63,929
HA OF PLANO	1740 AVENUE G, PLANO, TX 75074	2	14,045
GEORGETOWN HA	P.O. BOX 60, GEORGETOWN, TX 78627	1	7,171
DENTON HA	1225 WILSON STREET, DENTON, TX 76205	3	21,054
ARLINGTON HA	501 W. SANFORD, STE 20, ARLINGTON, TX 76011	2	12,253
HARRIS COUNTY HA	8410 LANTERN POINT, HOUSTON, TX 77054	20	152,955
BRAZORIA COUNTY HA	1524 E MULBERRY, STE 162, ANGLETON, TX 77515	1	5,515
DALLAS COUNTY HSG ASSISTANCE	2377 N. STEMMONS FRWY, STE 600—LB 12, DALLAS, TX 75207.	3	19,338
Total for DVP TO TBV Conversions		394	$3,422,776
Preservation/Prepayment			
WATERBURY HA	2 LAKEWOOD ROAD, WATERBURY, CT 06704	114	821,319
MIDDLETOWN HA	40 BROAD STREET, MIDDLETOWN, CT 06457	101	709,674
CONN DEPT OF SOCIAL SERVICES	25 SIGOURNEY STREET, 9TH FL, HARTFORD, CT 06105	96	843,852
CITY OF DES MOINES MUNC HSG	100 EAST EUCLID, STE 101, DES MOINES, IA 50313	78	361,352
CITY OF DAVENPORT, IOWA	501 WEST 3RD STREET, DAVENPORT, IA 52802	41	210,704
OLATHE HA	300 W. CHESTNUT, OLATHE, KS 66061	100	520,200
KENTUCKY HSG CORPORATION	1231 LOUISVILLE ROAD, FRANKFORT, KY 40601	43	199,770
EAST BATON ROUGE PHA	4731 NORTH BLVD, BATON ROUGE, LA 70806	23	142,902
NEW BEDFORD HA	P.O. BOX A–2081, NEW BEDFORD, MA 02741	71	491,723
BROCKTON HA	45 GODDARD ROAD, BROCKTON, MA 02303	118	1,162,465
FRAMINGHAM HA	1 JOHN J. BRADY DRIVE, FRAMINGHAM, MA 01702	51	523,701
WEYMOUTH HA	402 ESSEX STREET, WEYMOUTH, MA 02188	66	638,685
LEOMINSTER HA	100 MAIN ST, LEOMINSTER, MA 01453	7	44,847
HA OF BALTIMORE CITY	417 EAST FAYETTE STREET, BALTIMORE, MD 21201	98	816,050
MICHIGAN STATE HSG DEV AUTH	P.O. BOX 30044, LANSING, MI 48909	69	399,759

SECTION 8 RENTAL ASSISTANCE PROGRAMS ANNOUNCEMENT OF AWARDS FOR FISCAL YEAR 2009—Continued

Housing agency	Address	Units	Award
DAKOTA COUNTY CDA	1228 TOWN CENTRE DRIVE, EAGAN, MN 55123	4	26,700
INDEPENDENCE HA	210 SOUTH PLEASANT, INDEPENDENCE, MO 64050	23	124,534
ST. CLAIR COUNTY HA	P.O. BOX 125, APPLETON CITY, MO 64724	76	332,298
BUTTE HA	220 CURTIS STREET, BUTTE, MT 59701	55	232,201
NEW HAMPSHIRE HSG FIN AUTH	P.O. BOX 5087, MANCHESTER, NH 03108	30	235,505
PLAINFIELD HA	510 FRONT STREET, PLAINFIELD, NJ 07060	141	1,424,393
HA OF ROME	205 ST PETER'S AVE, ROME, NY 13440	60	224,863
HA OF ITHACA	800 S PLAIN STREET, ITHACA, NY 14850	0	369,871
THE CITY OF NEW YORK DHPD	100 GOLD STREET, ROOM 501, NEW YORK, NY 10007	726	13,189,719
CITY OF PEEKSKILL	840 MAIN STREET, PEEKSKILL, NY 10566	46	481,211
VILLAGE OF MANLIUS	1654 W. ONONDAGA ST, SYRACUSE, NY 13202	99	433,513
NYS HSG TRUST FUND CORP	38–40 STATE STREET, ALBANY, NY 12207	199	2,071,918
LORAIN MHA	1600 KANSAS AVENUE, LORAIN, OH 44052	103	612,117
KLAMATH HA	PO BOX 5110, KLAMATH FALLS, OR 97601	17	69,435
HA OF THE CITY OF PITTSBURGH	200 ROSS STREET, PITTSBURGH, PA 15219	17	100,984
LANCASTER HA	325 CHURCH STREET, LANCASTER, PA 17602	115	653,927
PAWTUCKET H A	214 ROOSEVELT AVE, PAWTUCKET, RI 02862	40	285,062
HA OF AIKEN	P.O. BOX 889, AIKEN, SC 29802	60	299,419
HA OF SOUTH CAROLINA REG NO 1	404 CHURCH ST., LAURENS, SC 29360	8	37,235
SIOUX FALLS HSG & REDEV	630 SOUTH MINNESOTA, SIOUX FALLS, SD 57104	100	516,216
Total for Preservation/Prepayment		2,995	$29,608,124
Property Disposition Relocation			
COUNTY OF BUTTE HA	2039 FOREST AVENUE, SUITE 10, CHICO, CA 95928	8	42,504
NEW ORLEANS HA	4100 TOURO STREET, NEW ORLEANS, LA 70122	94	993,160
NEW YORK CITY HA	90 CHURCH STREET, 9TH FL, NEW YORK, NY 10007	60	554,674
Total for Property Disposition Relocation.		162	$1,590,338
Rent Supplements			
LOUISVILLE HA	420 SOUTH EIGHTH STREET, LOUISVILLE, KY 40203	33	197,410
NEW BEDFORD HA	P.O. BOX A–2081, NEW BEDFORD, MA 02741	73	505,575
GREAT FALLS HA	1500 CHOWEN SPRINGS LOOP, GREAT FALLS, MT 59405	8	37,714
CITY OF BUFFALO RENT ASST CORP	470 FRANKLIN ST, BUFFALO, NY 14202	205	957,555
CITY OF MITCHELL HSG &	200 E 15TH AVE, MITCHELL, SD 57301	4	12,058
SIOUX FALLS HSG & REDEV	630 SOUTH MINNESOTA, SIOUX FALLS, SD 57104	13	67,108
Total for Rent Supplements		336	$1,777,420
Special Fees for DVP to TBV Conversions			
HA OF THE CITY AND CO OF DENVER.	777 GRANT STREET, DENVER, CO 80203	0	200
HA OF POMPANO BEACH	321 WEST ATLANTIC BLVD, POMPANO BEACH, FL 33061	0	200
HA OF TALLAHASSEE	2940 GRADY ROAD, TALLAHASSEE, FL 32312	0	200
HA OF DELRAY BEACH	600 N CONGRESS, STE 310B, DELRAY BEACH, FL 33445	0	200
HA OF FULTON COUNTY	4273 WENDELL DRIVE, SW, ATLANTA, GA 30336	0	400
NEW ORLEANS HA	4100 TOURO STREET, NEW ORLEANS, LA 70122	0	5,400
EAST BATON ROUGE PHA	4731 NORTH BLVD, BATON ROUGE, LA 70806	0	1,400
LAFAYETTE CITY HA	100 C O CIRCLE, LAFAYETTE, LA 70501	0	200
ASCENSION PARISH SEC 8 HA	213 EAST BLVD., BATON ROUGE, LA 70802	0	400
KENNER HA	1013 31ST STREET, KENNER, LA 70065	0	16,600
JEFFERSON PARISH HA	1718 BETTY STREET, MARRERO, LA 70072	0	38,000
CONCORDIA PARISH POLICE JURY	4001 CARTER STREET, ROOM 1, VIDALIA, LA 71373	0	400
ST JOHN THE BAPTIST PARISH HA	152 JOE PARQUET CIRCLE, LAPLACE, LA 70068	0	400
UNION PARISH POLICE JURY	P. O. BOX 723, FARMERVILLE, LA 71241	0	400
MISS REGIONAL HA VIII	P.O. BOX 2347, GULFPORT, MS 39505	0	600
JACKSON HOUS AUTH	2747 LIVINGSTON ROAD, JACKSON, MS 39283	0	200
HA WINSTON–SALEM	500 WEST FOURTH ST, STE 300, WINSTON–SALEM, NC 27101.	0	200
HA COUNTY OF WAKE	100 SHANNON STREET, ZEBULON, NC 27597	0	400
AUSTIN HA	P.O. BOX 6159, AUSTIN, TX 78762	0	200
HOUSTON HA	2640 FOUNTAIN VIEW, HOUSTON, TX 77057	0	3,800
SAN ANTONIO HA	818 S. FLORES STREET, SAN ANTONIO, TX 78295	0	1,400
HA OF DALLAS	3939 N. HAMPTON RD, DALLAS, TX 75212	0	1,600
HA OF PLANO	1740 AVENUE G, PLANO, TX 75074	0	400
GEORGETOWN HA	P.O. BOX 60, GEORGETOWN, TX 78627	0	200
DENTON HA	1225 WILSON STREET, DENTON, TX 76205	0	600
ARLINGTON HA	501 W. SANFORD, SUITE 20, ARLINGTON, TX 76011	0	400

SECTION 8 RENTAL ASSISTANCE PROGRAMS ANNOUNCEMENT OF AWARDS FOR FISCAL YEAR 2009—Continued

Housing agency	Address	Units	Award
HARRIS COUNTY HA	8410 LANTERN POINT, HOUSTON, TX 77054	0	4,000
BRAZORIA COUNTY HA	1524 E MULBERRY, STE 162, ANGLETON, TX 77515	0	200
DALLAS COUNTY HSG ASSISTANCE	2377 N. STEMMONS FRWY, STE 600—LB 12, DALLAS, TX 75207.	0	600
Total for Special Fees for DVP to TBV Conversions.		0	$79,200
Special Fees for PD Relocation			
COUNTY OF BUTTE HA	2039 FOREST AVENUE, SUITE 10, CHICO, CA 95928	0	1,400
NEW ORLEANS HA	4100 TOURO STREET, NEW ORLEANS, LA 70122	0	18,800
NEW YORK CITY HA	90 CHURCH STREET, 9TH FL, NEW YORK, NY 10007	0	12,000
Total for Special Fees for PD Relocation.		0	$32,200
Special Fees for Prepayments			
WATERBURY HA	2 LAKEWOOD ROAD, WATERBURY, CT 06704	0	22,800
MIDDLETOWN HA	40 BROAD STREET, MIDDLETOWN, CT 06457	0	20,200
CONN DEPT OF SOCIAL SERVICES	25 SIGOURNEY STREET, 9TH FL, HARTFORD, CT 06105	0	19,200
CITY OF DES MOINES MUNICIPAL HSG.	100 EAST EUCLID, STE 101, DES MOINES, IA 50313	0	15,600
CITY OF DAVENPORT, IOWA	501 WEST 3RD STREET, DAVENPORT, IA 52802	0	8,200
OLATHE HA	300 W. CHESTNUT, OLATHE, KS 66061	0	19,000
KENTUCKY HSG CORPORATION	1231 LOUISVILLE ROAD, FRANKFORT, KY 40601	0	8,600
EAST BATON ROUGE PHA	4731 NORTH BLVD, BATON ROUGE, LA 70806	0	4,600
NEW BEDFORD HA	P.O. BOX A–2081, NEW BEDFORD, MA 02741	0	14,200
BROCKTON HA	45 GODDARD ROAD, BROCKTON, MA 02303	0	23,600
FRAMINGHAM HA	1 JOHN J. BRADY DRIVE, FRAMINGHAM, MA 01702	0	10,200
WEYMOUTH HA	402 ESSEX STREET, WEYMOUTH, MA 02188	0	13,200
LEOMINSTER HA	100 MAIN ST, LEOMINSTER, MA 01453	0	1,000
HA OF BALTIMORE CITY	417 EAST FAYETTE STREET, BALTIMORE, MD 21201	0	19,600
MICHIGAN STATE HSG DEV AUTH	P.O. BOX 30044, LANSING, MI 48909	0	13,800
DAKOTA COUNTY CDA	1228 TOWN CENTRE DRIVE, EAGAN, MN 55123	0	800
INDEPENDENCE HA	210 SOUTH PLEASANT, INDEPENDENCE, MO 64050	0	4,600
ST. CLAIR COUNTY HA	P.O. BOX 125, APPLETON CITY, MO 64724	0	12,800
BUTTE HA	220 CURTIS STREET, BUTTE, MT 59701	0	11,000
NEW HAMPSHIRE HSG FIN AUTH	P.O. BOX 5087, MANCHESTER, NH 03108	0	6,000
PLAINFIELD HA	510 FRONT STREET, PLAINFIELD, NJ 07060	0	28,200
HA OF ROME	205 ST PETER'S AVE, ROME, NY 13440	0	12,000
THE CITY OF NEW YORK DHPD	100 GOLD STREET ROOM 501, NEW YORK, NY 10007	0	124,800
CITY OF PEEKSKILL	840 MAIN STREET, PEEKSKILL, NY 10566	0	9,200
VILLAGE OF MANLIUS	1654 W. ONONDAGA ST, SYRACUSE,	0	16,600
NYS HSG TRUST FUND CORP	38–40 STATE STREET, ALBANY, NY 12207	0	39,800
LORAIN MHA	1600 KANSAS AVENUE, LORAIN, OH 44052	0	20,600
KLAMATH HA	PO BOX 5110, KLAMATH FALLS, OR 97601	0	3,400
HA OF THE CITY OF PITTSBURGH	200 ROSS STREET, PITTSBURGH, PA 15219	0	3,400
LANCASTER HA	325 CHURCH STREET, LANCASTER, PA 17602	0	22,600
PAWTUCKET HA	214 ROOSEVELT AVE, PAWTUCKET, RI 02862	0	7,400
HA OF AIKEN	P.O. BOX 889, AIKEN, SC 29802	0	12,000
HA OF SOUTH CAROLINA REG NO 1	404 CHURCH ST, LAURENS, SC 29360	0	1,600
SIOUX FALLS HSG & REDEV	630 SOUTH MINNESOTA, SIOUX FALLS, SD 57104	0	20,000
Total for Special Fees for Prepayments.		0	$570,600
Special Fees for Rent Supplements			
LOUISVILLE HA	420 SOUTH EIGHTH STREET, LOUISVILLE, KY 40203	0	6,600
NEW BEDFORD HA	P.O. BOX A–2081, NEW BEDFORD, MA 02741	0	14,600
GREAT FALLS HA	1500 CHOWEN SPRINGS LOOP, GREAT FALLS, MT 59405	0	1,600
CITY OF BUFFALO RENT ASST CORP	470 FRANKLIN ST, BUFFALO, NY 14202	0	39,200
CITY OF MITCHELL HSG &	200 E 15TH AVE, MITCHELL, SD 57301	0	800
SIOUX FALLS HSG & REDEV	630 SOUTH MINNESOTA, SIOUX FALLS, SD 57104	0	2,600
Total for Special Fees for Rent Supplements.		0	$65,400
Special Fees for Term/Opt-outs			
MOBILE HSG BOARD	P.O. BOX 1345, MOBILE, AL 36633	0	4,200

SECTION 8 RENTAL ASSISTANCE PROGRAMS ANNOUNCEMENT OF AWARDS FOR FISCAL YEAR 2009—Continued

Housing agency	Address	Units	Award
HA OF HUNTSVILLE	P.O. BOX 486, HUNTSVILLE, AL 35804	0	8,600
HA OF JEFFERSON COUNTY	3700 INDUSTRIAL PARKWAY, BIRMINGHAM, AL 35217	0	1,600
HA OF EUFAULA	P.O. BOX 36, EUFAULA, AL 36027	0	800
HA OF THE CITY OF	P.O. BOX 8872, PINE BLUFF, AR 71611	0	2,600
ASHLEY COUNTY HA	202 S. MULBERRY STREET, HAMBURG, AR 71646	0	1,000
CITY OF LOS ANGELES HA	2600 WILSHIRE BLVD, 3RD FL, LOS ANGELES, CA 90057	0	24,400
CITY OF FRESNO HA	1331 FULTON MALL, FRESNO, CA 93776	0	11,200
COUNTY OF SACRAMENTO HSG	P.O. BOX 1834, SACRAMENTO, CA 95812	0	5,200
COUNTY OF RIVERSIDE HA	5555 ARLINGTON AVE, RIVERSIDE, CA 92504	0	18,600
COUNTY OF MONTEREY HA	123 RICO STREET, SALINAS, CA 93907	0	3,000
SAN DIEGO HSG COMMISSION	1122 BROADWAY, SUITE 300, SAN DIEGO, CA 92101	0	6,800
STAMFORD HA	22 CLINTON AVE, P.O. BOX 1376, STAMFORD, CT 06904	0	11,000
CITY OF HARTFORD	550 MAIN STREET, HARTFORD, CT 06103	0	9,600
HA OF JACKSONVILLE	1300 BROAD STREET, JACKSONVILLE, FL 32202	0	12,600
ST. PETERSBURG HA	P. O. BOX 12849, ST. PETERSBURG, FL 33733	0	23,800
HA OF DAYTONA BEACH	211 N RIDGEWOOD AVE, STE 200, DAYTONA BEACH, FL 32114.	0	11,600
HA OF SARASOTA	1300 BOULEVARD OF THE ARTS, SARASOTA, FL 34236	0	1,800
NW FLORIDA REGIONAL HA	P. O. BOX 218, GRACEVILLE, FL 32440	0	10,400
HA OF POMPANO BEACH	321 W. ATLANTIC BOULEVARD, POMPANO BEACH, FL 33061.	0	4,800
HA OF OCALA	P.O. BOX 2468, OCALA, FL 34478	0	18,400
PINELLAS COUNTY HA	11479 ULMERTON ROAD, LARGO, FL 33778	0	25,600
GAINESVILLE HA	P.O. BOX 1468, GAINESVILLE, FL 32602	0	30,400
HIALEAH HA	75 EAST 6TH STREET, HIALEAH, FL 33010	0	19,600
HA OF BOCA RATON	201 W. PALMETTO PARK ROAD, BOCA RATON, FL 33432	0	9,800
NORTH IOWA REG HA	202 1ST STREET, SE, STE 203, MASON CITY, IA 50401	0	1,400
IDAHO HSG AND FIN ASSOC	565 W MYRTLE STREET, BOISE, ID 83707	0	8,800
HA OF COOK COUNTY	175 WEST JACKSON BLVD, STE 350, CHICAGO, IL 60604	0	1,800
DUPAGE COUNTY HA	711 EAST ROOSEVELT ROAD, WHEATON, IL 60187	0	8,200
HA OF CITY OF JEFFERSONVILLE	206 EASTERN BOULEVARD, JEFFERSONVILLE, IN 47130	0	5,600
INDIANA HSG & COMMUNITY	30 S. MERIDIAN ST, STE 1000, INDIANAPOLIS, IN 46204	0	7,000
CITY OF RICHMOND SECTION 8 HSG	POST OFFICE BOX 250, RICHMOND, KY 40476	0	6,400
NEW ORLEANS HA	4100 TOURO STREET, NEW ORLEANS, LA 70122	0	14,000
EAST BATON ROUGE PHA	4731 NORTH BLVD, BATON ROUGE, LA 70806	0	6,400
MONROE HA	300 HARRISON ST, MONROE, LA 71203	0	8,000
TANGIPAHOA PARISH POLICE JURY	P.O. BOX 215, AMITE, LA 70422	0	1,400
WORCESTER HA	40 BELMONT STREET, WORCESTER, MA 01605	0	28,000
HA OF BALTIMORE CITY	417 EAST FAYETTE STREET, BALTIMORE, MD 21201	0	64,200
MICHIGAN STATE HSG DEV AUTH	P.O. BOX 30044, LANSING, MI 48909	0	13,600
ST. LOUIS HA	3520 PAGE BOULEVARD, ST. LOUIS, MO 63106	0	3,200
ST. FRANCOIS COUNTY PH AGENCY	P.O. BOX N, PARK HILLS, MO 63601	0	8,000
JASPER COUNTY PUBLIC HSG	P.O. BOX 207, JOPLIN, MO 64802	0	1,400
HA OF TENNESSEE VALLEY	P.O. BOX 1329, CORINTH, MS 38834	0	1,000
HA OF MISSISSIPPI REGIONAL NO 7	P.O. BOX 430, MC COMB, MS 39648	0	3,600
HA OF SOUTH DELTA	P.O. BOX 959, LELAND, MS 38756	0	13,800
MT DEPARTMENT OF COMMERCE	301 S. PARK, HELENA, MT 59620	0	4,000
HA SANFORD	504 N FIRST STREET PO BOX 636, SANFORD, NC 27331	0	2,400
MIDDLETOWN HA	2 OAKDALE DRIVE PLAZA, MIDDLETOWN, NJ 07748	0	11,400
SAN JUAN COUNTY HA	7450 E. MAIN STREET, STE C, FARMINGTON, NM 87402	0	3,400
NEW YORK CITY HA	90 CHURCH STREET, 9TH FL, NEW YORK, NY 10007	0	26,600
ALBANY HA	200 SOUTH PEARL, ALBANY, NY 12202	0	200
HA OF TROY	1 EDDYS LANE, TROY, NY 12180	0	24,200
HA OF GLENS FALLS	JAY STREET, GLENS FALLS, NY 12801	0	2,400
LAKE MHA	189 FIRST STREET, PAINESVILLE, OH 44077	0	6,400
HANCOCK MHA	1800 N. BLANCHARD STREET, STE 111,	0	2,400
HA & COMM SERVICES AGENCY OF	177 DAY ISLAND RD, EUGENE, OR 97401	0	4,000
HA OF JACKSON COUNTY	2231 TABLE ROCK ROAD, MEDFORD, OR 97501	0	2,400
PHILADELPHIA HA	12 SOUTH 23RD STREET, PHILADELPHIA, PA 19103	0	23,200
SCRANTON HA	400 ADAMS AVENUE, SCRANTON, PA 18510	0	6,800
ALLEGHENY COUNTY HSG	625 STANWIX ST, 12TH FLOOR, PITTSBURGH, PA 15222	0	2,200
HA OF COLUMBIA	1917 HARDEN STREET, COLUMBIA, SC 29204	0	5,600
CITY OF SPARTANBURG HA	P.O. BOX 2828, SPARTANBURG, SC 29304	0	14,000
SIOUX FALLS HSG & REDEVELOPMENT.	630 SOUTH MINNESOTA, SIOUX FALLS, SD 57104	0	200
KNOXVILLE COMMUNITY DEVEL CORP.	P.O. BOX 3550, KNOXVILLE, TN 37927	0	9,400
METRO DEVELOPMNT & HSG	701 SOUTH SIXTH STREET, NASHVILLE, TN 37202	0	4,600
HA OF MARYVILLE	100 BROADWAY TOWERS, MARYVILLE, TN 37801	0	5,600
HOUSTON HA	2640 FOUNTAIN VIEW, HOUSTON, TX 77057	0	14,200
SAN ANTONIO HA	818 S. FLORES STREET, SAN ANTONIO, TX 78295	0	8,200
HA OF PARIS	100 GEORGE W. WRIGHT HOMES, PARIS, TX 75461	0	3,200

SECTION 8 RENTAL ASSISTANCE PROGRAMS ANNOUNCEMENT OF AWARDS FOR FISCAL YEAR 2009—Continued

Housing agency	Address	Units	Award
HA OF PLANO	1740 AVENUE G, PLANO, TX 75074	0	1,800
HA OF ABILENE	555 WALNUT, ABILENE, TX 79604	0	19,000
HA CITY OF BRENHAM	1901 NORTHVIEW CIRCLE DRIVE, BRENHAM, TX 77833	0	3,400
DENTON HA	1225 WILSON STREET, DENTON, TX 76205	0	25,600
GRAND PRAIRIE HSNG & COMM DEV	201 NW 2ND ST, SUITE 150, GRAND PRAIRIE, TX 75050	0	5,600
LONGVIEW HSG & COMM. DEV	P.O. BOX 1952, LONGVIEW, TX 75606	0	9,600
CENTRAL TEXAS COUNCIL OF GOVTS.	2180 N. MAIN, BELTON, TX 76513–0729	0	8,200
BRAZORIA COUNTY HA	1524 E MULBERRY, STE 162, ANGLETON, TX 77515	0	4,200
DEEP EAST TX COUNCIL OF GOVTS	210 PREMIER DRIVE, JASPER, TX 75951	0	2,400
DALLAS COUNTY HSG ASSISTANCE	2377 N. STEMMONS FRWY, STE 600—LB 12, DALLAS, TX 75207.	0	12,200
DANVILLE REDEVELOPMENT & HA	651 CARDINAL PLACE, DANVILLE, VA 24541	0	1,800
LYNCHBURG REDEVELOPMENT & HA	918 COMMERCE STREET, LYNCHBURG, VA 24505	0	13,400
FAIRFAX CO REDEVELOPMENT & HA	3700 PENDER DRIVE, SUITE 300, FAIRFAX, VA 22030	0	16,000
VERMONT STATE HA	ONE PROSPECT STREET, MONTPELIER, VT 05602	0	5,000
SEATTLE HA	120 SIXTH AVENUE NORTH, SEATTLE, WA 98109	0	10,600
KING COUNTY HA	600 ANDOVER PARK WEST, SEATTLE, WA 98188	0	26,600
HA OF CITY OF EVERETT	3107 COLBY AVE, EVERETT, WA 98206	0	20,000
HA OF GRAYS HARBOR	602 EAST FIRST STREET, ABERDEEN, WA 98520	0	6,800
PORTAGE COUNTY HA	1100 CENTERPOINT DR, STE 201–B, STEVENS POINT, WI 54481.	0	16,000
WISCONSIN HSG & ECONOMIC DEVELOPMENT AUTH.	MADISON, WI 53701	0	2,400
HA OF THE CITY OF CHEYENNE	3304 SHERIDAN AVENUE, CHEYENNE, WY 82009	0	2,800
Total for Special Fees for Term/Opt-outs.		0	$883,600
Terminations/Opt-outs			
MOBILE HSG BOARD	P.O. BOX 1345, MOBILE, AL 36633	42	218,650
HA OF HUNTSVILLE	P.O. BOX 486, HUNTSVILLE, AL 35804	43	205,397
HA OF JEFFERSON COUNTY	3700 INDUSTRIAL PARKWAY, BIRMINGHAM, AL 35217	8	48,804
HA OF EUFAULA	P.O. BOX 36, EUFAULA, AL 36027	4	13,771
HA OF THE CITY OF PINE BLUFF	P.O. BOX 8872, PINE BLUFF, AR 71611	13	54,431
ASHLEY COUNTY HA	202 S. MULBERRY STREET, HAMBURG, AR 71646	5	15,807
CITY OF LOS ANGELES HA	2600 WILSHIRE BLVD, 3RD FL, LOS ANGELES, CA 90057	122	1,148,354
CITY OF FRESNO HA	1331 FULTON MALL, FRESNO, CA 93776	56	341,799
COUNTY OF SACRAMENTO HSG	P.O. BOX 1834, SACRAMENTO, CA 95812	26	219,604
COUNTY OF RIVERSIDE HA	5555 ARLINGTON AVE, RIVERSIDE, CA 92504	93	720,969
COUNTY OF MONTEREY HA	123 RICO STREET, SALINAS, CA 93907	15	119,315
SAN DIEGO HSG COMMISSION	1122 BROADWAY, SUITE 300, SAN DIEGO, CA 92101	34	338,881
STAMFORD HA	22 CLINTON AVE, STAMFORD, CT 06904	56	836,154
CITY OF HARTFORD	550 MAIN STREET, HARTFORD, CT 06103	48	381,456
HA OF JACKSONVILLE	1300 BROAD STREET, JACKSONVILLE, FL 32202	65	446,277
ST. PETERSBURG HA	P. O. BOX 12849, ST. PETERSBURG, FL 33733	146	1,221,144
HA OF DAYTONA BEACH	211 N. RIDGEWOOD AVE, STE 200, DAYTONA BEACH, FL 32114.	60	391,867
HA OF SARASOTA	1300 BOULEVARD OF THE ARTS, SARASOTA, FL 34236	21	186,508
NW FLORIDA REGIONAL HA	P. O. BOX 218, GRACEVILLE, FL 32440	52	278,098
HA OF POMPANO BEACH	321 WEST ATLANTIC BLVD, POMPANO BEACH, FL 33061	24	248,435
HA OF OCALA	P.O. BOX 2468, OCALA, FL 34478	92	523,307
PINELLAS COUNTY HA	11479 ULMERTON ROAD, LARGO, FL 33778	128	915,348
GAINESVILLE HA	P.O. BOX 1468, GAINESVILLE, FL 32602	152	1,006,629
HIALEAH HA	75 EAST 6TH STREET, HIALEAH, FL 33010	98	781,817
HA OF BOCA RATON	201 WEST PALMETTO PARK ROAD, BOCA RATON, FL 33432	49	428,970
NORTH IOWA REGIONAL HA	202 1ST STREET, SE, STE 203, MASON CITY, IA 50401	7	19,235
IDAHO HSG AND FINANCE ASSOC	565 W MYRTLE STREET, BOISE, ID 83707	5	20,873
DUPAGE COUNTY HA	711 EAST ROOSEVELT ROAD, WHEATON, IL 60187	42	405,433
HA. CITY OF JEFFERSONVILLE	206 EASTERN BOULEVARD, JEFFERSONVILLE, IN 47130	28	115,839
INDIANA HSG & COMM DEV AUTH	30 S. MERIDIAN ST, STE 1000, INDIANAPOLIS, IN 46204	35	183,977
CITY OF RICHMOND SECTION 8 HSG	POST OFFICE BOX 250, RICHMOND, KY 40476	32	130,648
NEW ORLEANS HA	4100 TOURO STREET, NEW ORLEANS, LA 70122	70	739,586
EAST BATON ROUGE PHA	4731 NORTH BLVD, BATON ROUGE, LA 70806	32	224,790
MONROE HA	300 HARRISON ST, MONROE, LA 71203	53	222,740
TANGIPAHOA PARISH POLICE JURY	P.O. BOX 215, AMITE, LA 70422	50	229,938
WORCESTER HA	40 BELMONT STREET, WORCESTER, MA 01605	140	994,745
HA OF BALTIMORE CITY	417 EAST FAYETTE STREET, BALTIMORE, MD 21201	321	2,670,720
MICHIGAN STATE HSG DEV AUTH	P.O. BOX 30044, LANSING, MI 48909	68	389,117
ST. LOUIS HA	3520 PAGE BOULEVARD, ST. LOUIS, MO 63106	16	104,127
ST. FRANCOIS COUNTY PHA	P.O. BOX N, PARK HILLS, MO 63601	40	251,587

SECTION 8 RENTAL ASSISTANCE PROGRAMS ANNOUNCEMENT OF AWARDS FOR FISCAL YEAR 2009—Continued

Housing agency	Address	Units	Award
JASPER COUNTY PHA	P.O. BOX 207, JOPLIN, MO 64802	12	42,224
HA TENNESSEE VALLEY	P.O. BOX 1329, CORINTH, MS 38834	5	17,480
HA OF MISSISSIPPI REGIONAL NO 7	P.O. BOX 430, MC COMB, MS 39648	18	54,791
HA OF SOUTH DELTA	P.O. BOX 959, LELAND, MS 38756	69	329,743
MT DEPARTMENT OF COMMERCE	301 S. PARK, HELENA, MT 59620	22	148,174
HA OF SANFORD	504 N FIRST STREET PO BOX 636, SANFORD, NC 27331	23	103,141
UNION CITY HA	3911 KENNEDY BOULEVARD, UNION CITY, NJ 07087	0	111,742
MIDDLETOWN HA	2 OAKDALE DRIVE PLAZA, MIDDLETOWN, NJ 07748	57	559,847
SAN JUAN COUNTY HA	7450 E. MAIN STREET, STE C, FARMINGTON, NM 87402	28	115,984
NEW YORK CITY HA	90 CHURCH STREET, 9TH FL, NEW YORK, NY 10007	133	1,272,411
ALBANY HA	200 SOUTH PEARL, ALBANY, NY 12202	1	5,428
HA OF TROY	1 EDDYS LANE, TROY, NY 12180	121	573,424
HA OF GLENS FALLS	JAY STREET, GLENS FALLS, NY 12801	12	52,901
LAKE MHA	189 FIRST STREET, PAINESVILLE, OH 44077	32	208,973
HANCOCK MHA	1800 N. BLANCHARD STREET, STE 114,	12	45,480
HA & COMM SERV AGENCY OF LANE CO.	177 DAY ISLAND RD, EUGENE, OR 97401	20	106,481
HA OF JACKSON COUNTY	2231 TABLE ROCK ROAD, MEDFORD, OR 97501	12	59,592
PHILADELPHIA HA	12 SOUTH 23RD STREET, PHILADELPHIA, PA 19103	116	750,575
SCRANTON HA	400 ADAMS AVENUE, SCRANTON, PA 18510	34	151,661
ALLEGHENY COUNTY HA	625 STANWIX ST, 12TH FL, PITTSBURGH, PA 15222	11	60,341
HA OF COLUMBIA	1917 HARDEN STREET, COLUMBIA, SC 29204	28	153,246
CITY OF SPARTANBURG HA	P.O. BOX 2828, SPARTANBURG, SC 29304	80	393,034
SIOUX FALLS HSG & REDEV AUTH	630 SOUTH MINNESOTA, SIOUX FALLS, SD 57104	1	5,016
KNOXVILLE COMMUNITY DEVEL CORP.	P.O. BOX 3550, KNOXVILLE, TN 37927	47	249,722
METRO DEVELOPMENT & HSG	701 SOUTH SIXTH STREET, NASHVILLE, TN 37202	23	128,908
HA OF MARYVILLE	100 BROADWAY TOWERS, MARYVILLE, TN 37801	52	237,045
HOUSTON HA	2640 FOUNTAIN VIEW, HOUSTON, TX 77057	73	536,749
SAN ANTONIO HA	818 S. FLORES STREET, SAN ANTONIO, TX 78295	50	343,452
HA OF PARIS	100 GEO. W. WRIGHT HOMES, PARIS, TX 75461	16	71,197
HA OF PLANO	1740 AVENUE G, PLANO, TX 75074	9	62,911
HA OF ABILENE	555 WALNUT, ABILENE, TX 79604	95	411,904
HA OF CITY OF BRENHAM	1901 NORTHVIEW CIRCLE DRIVE, BRENHAM, TX 77833	19	103,074
DENTON HA	1225 WILSON STREET, DENTON, TX 76205	132	957,305
GRAND PRAIRIE HSNG & COMM DEV	201 NW. 2ND ST, SUITE 150, GRAND PRAIRIE, TX 75050	28	216,067
LONGVIEW HSG & COMM. DEV	P.O. BOX 1952, LONGVIEW, TX 75606	48	235,636
CENTRAL TEXAS COUNCIL OF GOVTS.	2180 N. MAIN, BELTON, TX 76513	41	195,604
BRAZORIA COUNTY HA	1524 E MULBERRY STE 162, ANGLETON, TX 77515	25	145,482
DEEP EAST TX COUNCIL OF GOVTS	210 PREMIER DRIVE, JASPER, TX 75951	13	66,784
DALLAS COUNTY HSG ASSISTANCE	2377 N. STEMMONS FRWY, STE 600—LB 12, DALLAS, TX 75207.	61	399,174
DANVILLE REDEVELOPMENT & HA	651 CARDINAL PLACE, DANVILLE, VA 24541	9	43,689
LYNCHBURG REDEVELOPMENT & HA	918 COMMERCE STREET, LYNCHBURG, VA 24505	69	257,475
FAIRFAX CO REDEVLOPMENT & HA	3700 PENDER DRIVE, SUITE 300, FAIRFAX, VA 22030	80	995,386
VERMONT STATE HA	ONE PROSPECT STREET, MONTPELIER, VT 05602	25	142,254
SEATTLE HA	120 SIXTH AVENUE NORTH, SEATTLE, WA 98109	60	657,367
KING COUNTY HA	600 ANDOVER PARK WEST, SEATTLE, WA 98188	135	1,566,821
HA OF CITY OF EVERETT	3107 COLBY AVE, EVERETT, WA 98206	101	833,105
HA OF GRAYS HARBOR	602 EAST FIRST STREET, ABERDEEN, WA 98520	34	154,098
PORTAGE COUNTY HA	1100 CENTERPOINT DR, STE 201–B, STEVENS POINT, WI 54481.	80	258,566
WISCONSIN HSG & ECON DEV	P.O. BOX 1728, MADISON, WI 53701	12	49,116
HA OF THE CITY OF	3304 SHERIDAN AVENUE, CHEYENNE, WY 82009	16	79,450
Total for Terminations/Opt-outs		4,591	$32,515,177
Total for Housing Tenant Protection		8,478	$70,544,835
HOPE VI Vouchers			
FAYETTEVILLE METRO HA	PO DRAWER 2349, FAYETTEVILLE, NC 28302	224	1,265,429
KING COUNTY HA	600 ANDOVER PARK WEST, SEATTLE, WA 98188	84	906,162
Total for TP HOPE VI Vouchers		308	$2,171,591
Grand Total		21,098	$167,165,850

[FR Doc. 2010–2568 Filed 2–4–10; 8:45 am]
BILLING CODE 4210–67–P

DEPARTMENT OF THE INTERIOR

Office of the Secretary

DEPARTMENT OF AGRICULTURE

Office of the Secretary

Establishment of the Wildlife and Hunting Heritage Conservation Council

AGENCY: Office of the Secretary, Interior; Office of the Secretary, Agriculture.

ACTION: Notice of establishment.

SUMMARY: The Secretary of the Interior and the Secretary of Agriculture establish the Wildlife and Hunting Heritage Conservation Council (Council). The Council will provide advice on wildlife and habitat conservation endeavors that (1) benefit recreational hunting; (2) benefit wildlife resources; and (3) encourage partnerships among the public, the sporting conservation community, wildlife conservation groups, the States, Native American Tribes, and the Federal government. We are seeking nominations for individuals to be considered as Council members.

DATES: Written nominations must be received by March 8, 2010.

ADDRESSES: Send nominations to: Bruce Decker, Chief, Division of Program and Partnership Support, External Affairs, U.S. Fish and Wildlife Service, 4501 N. Fairfax Drive, Mailstop EA–3103, Arlington, VA 22203.

FOR FURTHER INFORMATION CONTACT: Bruce Decker, Chief, Division of Program and Partnership Support, External Affairs, U.S. Fish and Wildlife Service, 4501 N. Fairfax Drive, Mailstop EA–3103, Arlington, VA 22203; 703–358–2521 (telephone).

SUPPLEMENTARY INFORMATION: This notice is published in accordance with the requirements of the Federal Advisory Committee Act (FACA) (5 U.S.C. App.). The Secretary of the Interior and Secretary of Agriculture certify that the formation of the Council is necessary and is in the public interest.

The Council will conduct its operations in accordance with the provisions of the FACA. It will report to the Secretary of the Interior and the Secretary of Agriculture through the Fish and Wildlife Service (Service), in consultation with the Director of the Bureau of Land Management; the Chief, U.S Forest Service; the Chief, Natural Resources Conservation Agency; and the Administrator of the Farm Services Bureau, and it will function solely as an advisory body. The Council's duties will consist of, but are not limited to, providing recommendations for:

(a) Implementing the *Recreational Hunting and Wildlife Resource Conservation Plan—A Ten-Year Plan for Implementation;*

(b) Increasing public awareness and support for the Sport Wildlife Trust Fund;

(c) Fostering wildlife and habitat conservation and ethics in hunting and shooting sports recreation;

(d) Stimulating sportsmen and women's participation in conservation and management of wildlife and habitat resources through outreach and education;

(e) Fostering communication and coordination among State and Federal Government, industry, hunting and shooting sportsmen and women, wildlife conservation and management organizations, native American Tribes, and the public;

(f) Providing appropriate access to hunting and recreational shooting on Federal lands; and

(g) Providing recommendations to improve implementation of Federal conservation programs that benefit wildlife, hunting and outdoor recreation on private lands.

The Council will meet approximately two times per year. The Secretary of the Interior and the Secretary of Agriculture will appoint members for 2-year terms. The Council will consist of no more than 18 members.

The following officials or their designated representatives will serve as ex officio members to the Council: Director, U.S. Fish and Wildlife Service; Director, Bureau of Land Management; Chief, U.S. Forest Service; Chief, Natural Resources Conservation Service; Administrator, Farm Services Bureau; and Executive Director, Association of Fish and Wildlife Agencies (AFWA) will serve as ex officio members to the Council.

The Secretaries will select remaining members from among, but not limited to, the national interest groups listed below. These members must be senior-level representatives of their organizations and/or have the ability to represent their designated constituency. No individual who is currently registered as a Federal lobbyist is eligible to serve as a member of the Council.

(1) State fish and wildlife resource management agencies (representatives to be recommended by the President of AFWA).

(2) Wildlife and habitat conservation/management organizations.

(3) Game bird hunting organizations.

(4) Waterfowl hunting organizations.

(5) Big game hunting organizations.

(6) Sportsmen and women community at-large.

(7) Archery, hunting, and/or shooting sports industry.

(8) Hunting and shooting sports outreach and education organizations.

(9) Tourism, Outfitter, and/or Guide industries related to hunting and/or shooting sports.

(10) Tribal resource management organizations.

We invite nomination of individuals for membership on the Council. Nominations should describe and document the proposed member's qualifications for membership to the Council, and include a resume listing their name, title, address, telephone, and fax number.

Certification

I hereby certify that the Wildlife and Hunting Heritage Conservation Council (Council) is necessary and is in the public interest in connection with the performance of duties imposed on the Department of the Interior and the Department of Agriculture under 43 U.S.C. 1457 and provisions of the Fish and Wildlife Act of 1956 (16 U.S.C. 742a–742j), the Federal Land Policy and Management Act of 1976 (43 U.S.C. 1701 *et seq.*), the National Forest Management Act of 1976 (16 U.S.C. 1600 *et seq.*), the National Wildlife Refuge System Improvement Act of 1997 (16 U.S.C. 668dd–668ee) and Executive Order 13443, Facilitation of Hunting Heritage and Wildlife Conservation.

Ken Salazar,
Secretary of the Interior.
Thomas J. Vilsack,
Secretary of Agriculture.

[FR Doc. 2010–2582 Filed 2–4–10; 8:45 am]
BILLING CODE 4310–55–P

DEPARTMENT OF THE INTERIOR

Office of the Secretary

National Geospatial Advisory Committee

AGENCY: Office of the Secretary, Interior.

ACTION: Notice of renewal of National Geospatial Advisory Committee.

SUMMARY: This notice is published in accordance with Section 9(a) of the Federal Advisory Committee Act of 1972 (Pub. L. 92–463). Notice is hereby given that the Secretary of the Interior

has renewed the National Geospatial Advisory Committee. The Committee will provide advice and recommendations to the Federal Geographic Data Committee (FGDC), through the FGDC Chair (the Secretary of the Interior or designee), related to management of Federal geospatial programs, the development of the National Spatial Data Infrastructure (NSDI), and the implementation of Office of Management and Budget (OMB) Circular A–16 and Executive Order 12906. The Committee will review and comment upon geospatial policy and management issues and will provide a forum to convey views representative of non-Federal partners in the geospatial community.

FOR FURTHER INFORMATION CONTACT: John Mahoney, USGS (phone: 206–220–4621, e-mail: *jmahoney@usgs.gov*).

SUPPLEMENTARY INFORMATION: We are publishing this notice in accordance with the requirements of the Federal Advisory Committee Act (5 U.S.C. App.) (FACA). The Committee will conduct its operations in accordance with the provisions of the FACA. It will report to the Secretary of the Interior through the Chair of the FGDC Steering Committee and will function solely as an advisory body. The Committee will provide recommendations and advice to the Department and the FGDC on policy and management issues related to the effective operation of Federal geospatial programs.

The Secretary of the Interior will appoint Committee members. The Committee will be composed of up to 30 representatives, who will be selected to generally achieve a balanced representation of the viewpoints of the various stakeholders involved in national geospatial activities and the development of the NSDI.

The Committee is expected to meet 3–4 times per year. Committee members will serve without compensation. Travel and per diem costs will be provided for Committee members by the U.S. Geological Survey (USGS). The USGS will provide necessary support services to the Committee. Committee meetings will be open to the public. Notice of committee meetings will be published in the **Federal Register** at least 15 days before the date of the meeting. The public will have an opportunity to provide input at these meetings.

In accordance with FACA, a copy of the Committee's charter will be filed with the Committee Management Secretariat, General Services Administration; Committee on Energy and Natural Resources, United States Senate; Committee on Natural Resources, United States House of Representatives; and the Library of Congress.

The Certification for renewal is published below.

Certification: I hereby certify that the National Geospatial Advisory Committee is in the public interest in connection with the performance of duties imposed on the Department of the Interior by Office of Management and Budget (OMB) Circular A–16 (Revised), "*Coordination of Geographic Information and Related Spatial Data Activities.*" The Committee will assist the Department of the Interior by providing advice and recommendations related to the management of Federal geospatial programs and the development of the National Spatial Data Infrastructure.

Dated: January 28, 2010.

Ken Salazar,

Secretary of the Interior.

[FR Doc. 2010–2508 Filed 2–4–10; 8:45 am]

BILLING CODE 4311–AM–P

DEPARTMENT OF THE INTERIOR

Office of the Secretary

Terminating the Sporting Conservation Council

AGENCY: Office of the Secretary, Interior.

ACTION: Notice of termination.

SUMMARY: After consultation with the Secretary of Agriculture and the General Services Administration, we, the Department of the Interior, have terminated the Sporting Conservation Council.

FOR FURTHER INFORMATION CONTACT: Bruce Decker, Chief, Division of Program and Partnership Support, External Affairs, U.S. Fish and Wildlife Service, 4501 N. Fairfax Drive, Mailstop EA–3103, Arlington, Virginia 22203; telephone 703–358–2521.

Dated: January 7, 2010.

Ken Salazar,

Secretary of the Interior.

[FR Doc. 2010–2497 Filed 2–4–10; 8:45 am]

BILLING CODE 4310–55–P

DEPARTMENT OF THE INTERIOR

Bureau of Land Management

[CACA 49561, LLCAD08000L5101 ER0000LVRWB09B3220]

Notice of Availability of the Draft Environmental Impact Statement for the Proposed Chevron Energy Solutions Lucerne Valley Solar Project, San Bernardino County, CA, and the Draft California Desert Conservation Area Plan Amendment

AGENCY: Bureau of Land Management, Interior.

ACTION: Notice of Availability.

SUMMARY: In accordance with the National Environmental Policy Act of 1969, as amended, and the Federal Land Policy and Management Act of 1976, as amended, the Bureau of Land Management (BLM) has prepared a Draft California Desert Conservation Area (CDCA) Plan Amendment and a Draft Environmental Impact Statement (EIS) for the proposed Chevron Energy Solutions Lucerne Valley Solar Project and by this notice is announcing the opening of the comment period.

DATES: To ensure that comments will be considered, the BLM must receive written comments on the CDCA Plan Amendment and Draft EIS within 90 days following the date the Environmental Protection Agency publishes this Notice of Availability in the **Federal Register**. The BLM will announce future meetings or hearings and any other public involvement activities at least 15 days in advance through public notices, media releases, or mailings.

ADDRESSES: You may submit comments related to the proposed Chevron Energy Solutions Lucerne Valley Solar Project by any of the following methods:

- *Web site: http://www.blm.gov/ca/st/en/fo/barstow.html.*
- *E-mail: LucerneSolar@blm.gov.*
- *Fax:* (951) 697–5299.
- *Mail or other delivery service:* Greg Thomsen, BLM California Desert District Office, 22835 Calle San Juan de Los Lagos, Moreno Valley, California 92553.

Copies of the Draft EIS and Draft CDCA Plan Amendment for the proposed Chevron Energy Solutions Lucerne Valley Solar Project are available in the California Desert District Office at the above address.

FOR FURTHER INFORMATION CONTACT: For further information contact Greg Thomsen, Project Manager; telephone (951) 697–5237 or at the address and e-mail address above.

SUPPLEMENTARY INFORMATION: Chevron Energy Solutions has requested a 516-acre right-of-way (ROW) authorization to construct and operate a 45-megawatt solar photovoltaic project and connect it to an existing Southern California Edison 33 kV distribution system on public lands located approximately 8 miles east of Lucerne Valley, San Bernardino County, California.

The proposed project would include a solar array, switchyard, a control and maintenance building, and parking area. The Draft EIS analyzes the site-specific impacts to the environment from the proposed project. Alternatives include:

- A no action alternative with a plan amendment making the project area unavailable to other solar energy projects;
- A no action alternative with a plan amendment making the project area available to other solar energy projects;
- The proposed action;
- A modified proposed action that reduces visual and biological impacts; and
- A reduced footprint/reduced megawatts modified proposed action.

Pursuant to BLM's CDCA Plan (1980, as amended), sites associated with power generation or transmission not identified in the CDCA Plan will be considered through the plan amendment process.

A Notice of Intent to Prepare an EIS and CDCA Plan amendment for the Lucerne Valley Solar Project was published in the **Federal Register** on July 23, 2009. This was followed by a 30-day public scoping period which ended August 22, 2009. Scoping meetings were held on July 23, 2009 in Lucerne Valley, California, and on July 30 in San Bernardino, California. Numerous public scoping comments were received.

The main concerns included potential impacts to biological species, visual resources, and cultural resources, and appropriate use of public land. The issues and concerns identified in the scoping comments were addressed in the DEIS.

Please note that public comments will be available for public review and disclosure at the above address during regular business hours (8 a.m. to 4 p.m.), Monday through Friday, except holidays.

Before including your address, phone number, e-mail address, or other personal identifying information in your comment, you should be aware that your entire comment—including your personal identifying information—may be made publicly available at any time. While you can ask us in your comment to withhold your personal identifying information from public review, we cannot guarantee that we will be able to do so.

Authority: 40 CFR 1506.6; 40 CFR 1506.10; 43 CFR 1610.2.

Thomas Pogacnik,

Deputy State Director, California.

[FR Doc. 2010–2299 Filed 2–4–10; 8:45 am]

BILLING CODE 4310–40–P

DEPARTMENT OF THE INTERIOR

Fish and Wildlife Service

[FWS–R8–MB–2009–N286; 80213–9410–0000–7B]

Federal Sport Fish Restoration; California Department of Fish and Game Fish Hatchery and Stocking Program

AGENCY: Fish and Wildlife Service, Interior.

ACTION: Notice of availability: Final environmental impact report/environmental impact statement (EIR/EIS).

SUMMARY: The U.S. Fish and Wildlife Service (FWS) announces the availability of the final EIR/EIS for the California Department of Fish and Game's (CDFG) Fish Hatchery and Stocking Program (Program). FWS is lead agency, under the National Environmental Policy Act (NEPA) of 1969, as amended, for the EIR/EIS jointly prepared with CDFG. Under the Sport Fish Restoration Act (SFRA), FWS proposes to fund actions associated with the operation of CDFG's 14 trout hatcheries and the Mad River Hatchery for the anadromous steelhead, and stocking from the 15 hatcheries. The Federal action does not include funding CDFG's other anadromous fish hatcheries and associated stocking, nor its issuance of private stocking permits. SFRA funding may also support CDFG's Fishing in the City and Classroom Aquarium Education Programs. CDFG is the lead agency under the California Environmental Quality Act (CEQA) and proposes to implement hatchery operations and stocking funded by FWS, as well as all other components of the CDFG Program, including anadromous fish hatchery operations and associated stocking, and issuance of stocking permits to private parties seeking to stock fish in California's inland waters. The final EIR/EIS presents Program impact analysis, mitigation for impacts, selection of the preferred alternative, and response to comments received during the comment period for the draft EIR/EIS.

DATES: We anticipate that a Record of Decision will be issued by FWS in 2010, but no sooner than 30 days after the **Federal Register** publication date for this notice of availability.

ADDRESSES: Download copies of the final EIR/EIS from the CDFG Web site at *http://www.dfg.ca.gov/news/pubnotice/hatchery/*. Alternatively, you may send your request for copies of the final EIR/EIS to Mr. Bart Prose by mail at U.S. Fish and Wildlife Service, 2800 Cottage Way, Room W–1729, Sacramento, CA 95825; by e-mail to *bart_prose@fws.gov*; or by fax to (916) 978–6155.

FOR FURTHER INFORMATION CONTACT: Mr. Bart Prose: (916) 978–6152 (phone); *bart_prose@fws.gov* (e-mail).

SUPPLEMENTARY INFORMATION: Under the SFRA (Pub. L. 106–408), FWS has authority to grant Federal funds from the Sport Fish Restoration and Boating Trust Fund to support actions associated with CDFG's Program. The Trust Fund is financed through collection of excise taxes on sport-fishing equipment, electric motors, and sonar; import duties on fishing tackle, yachts, and pleasure craft; the portion of gasoline tax attributable to motorboats and small engines; and interest on the Fund.

CDFG has been rearing and stocking fish in the inland waters of California since the late 1800s, when the State of California enacted legislation to restore and preserve fish in State waters. This legislation called for the newly formed California State Fish and Game Commission to establish "fish breederies" to stock and supply streams, lakes, and bays with both foreign and domestic fish. Since that time in the late 1800s, CDFG has continued that mandate by rearing and stocking both inland trout and anadromous species of fish reared at 24 hatcheries and planting bases located throughout the State.

For the past approximately 100 years, CDFG has stocked nonnative trout throughout the State. CDFG's Program currently operates 14 trout hatcheries throughout the State, rearing 6 trout species and 3 salmon species. Trout hatcheries rear rainbow, golden, cutthroat, brown, lake, and brook trout. Salmon species reared include Chinook, Coho, and kokanee. CDFG's Mad River Hatchery for anadromous fish presently rears only steelhead. Over the past 5 years, CDFG planted over 3.6 million pounds of combined trout and inland salmon, annually, from its 14 trout hatcheries into hundreds of locations, including high mountain lakes, low-elevation reservoirs, and various streams and creeks. The Mad River

Hatchery planted over 39,000 pounds of steelhead, annually, into the Mad River.

Funding CDFG Program activities provides freshwater angling opportunities and recreation throughout the State. Operations and stocking associated with the 14 trout hatcheries and the Mad River anadromous fish hatchery are eligible for SFRA grants. FWS does not fund operations or stocking associated with other anadromous hatcheries because they are mitigation hatcheries, which are funded through other sources.

In 2005, State Assembly Bill 7 added Section 13007 to the California Fish and Game Code (FGC 13007), which established annual minimum release targets for hatchery trout based upon sport-fishing license sales, and required CDFG to deposit one-third of sport-fishing license fees into its Hatchery and Inland Fisheries Fund for specified fisheries management purposes. Per CDFG's implementation plan for FGC 13007, funding for the stocking program was scheduled to increase from almost $8 million for State fiscal year (FY) 2005–2006, to $15 million for State FY 2006–2007. In addition, a State court order in 2006 required CDFG to complete an environmental review for its Program. To expedite Program changes due to FGC 13007, the court-ordered environmental review, and associated SFRA funding contributions to the Program, FWS and CDFG agreed to prepare a joint EIR/EIS. FWS published a notice of intent to prepare the EIR/EIS in the **Federal Register** on August 5, 2008 (73 FR 45470). The notice of availability for the draft EIR/EIS and 45-day comment period published in the **Federal Register** on October 8, 2009 (74 FR 51872).

The objectives of CDFG's Program are to continue the rearing and stocking of fish for the recreational use of anglers, while balancing the interaction between State- and privately stocked fish and threatened and endangered species. The purpose of FWS's proposed SFRA funding is to support operations of CDFG's 14 trout hatcheries and the Mad River Hatchery for the anadromous steelhead, and associated stocking of fish produced at those hatcheries. SFRA funding also supports CDFG's Fishing in the City and Classroom Aquarium Education Programs. The need addressed by the proposed action is the support of viable recreational fishing in California, through increased angler success that is provided by stocking of hatchery fish in both urban and rural water bodies. Provision of SFRA funds for support of private stocking permits, or operation of other anadromous fish hatcheries and their associated stocking efforts, is outside the scope of actions contemplated by FWS at this time.

Hatchery operations and stocking activities associated with CDFG's inland water hatchery program, including potential increases in fish rearing and stocking in the future, have been evaluated for their effects on the environment. Potential impacts to native amphibians and fish, which have experienced declines within the state, are of chief interest. Results of the evaluations and alternative courses of action are presented in the draft EIR/EIS, in accordance with CEQA (PRC 21000 *et seq.*) and NEPA (42 U.S.C. 4321 *et seq.*).

Alternatives

Four alternatives were developed for CDFG's Fish Hatchery and Stocking Program, and each was included for detailed analysis in the draft EIS/EIR. All Program components are subject to CEQA, but only the subset of components with Federal discretionary involvement (associated with SFRA funding) are subject to NEPA; i.e., operations of CDFG's 14 trout hatcheries and the Mad River Hatchery for steelhead, associated stocking of fish produced at those hatcheries, and the Fishing in the City and Classroom Aquarium Education Programs. Only the components of the 4 alternatives pertinent to NEPA are described here.

Preferred Alternative

Under the Preferred Alternative, FWS will continue to provide funding, as modified by certain mitigation provisions, for operations of CDFG's 14 trout hatcheries and the Mad River Hatchery for steelhead, and associated stocking of fish produced at those hatcheries. Hatchery operations will remain largely unchanged from those conducted during the last 5 years, with mitigation applied in some instances to protect water quality, check the spread of invasive species and pathogens, and manage ground water. Decisions on stocking of trout, where potential for significant impacts exist, will be made using a state-wide, pre-stocking evaluation protocol that emphasizes protection of native, sensitive, or legally-protected species. In high mountain lake areas where Aquatic Biodiversity Management Plans (ABMPs) have been prepared, stocking will continue to follow guidelines that ensure expansion of habitats for native amphibians and fish. In areas without ABMPs, trout stocking will be based on site-specific, pre-stocking evaluations of risk to native, sensitive, or legally protected species. ABMPs or other similar plans may be developed and implemented prior to stocking in those locations. Such plans could include eradication of nonnative fish from water bodies currently or formerly harboring sensitive native species, genetic analysis of native fish to determine degree of hybridization, cessation of nonnative trout stocking in waters occupied by native trout populations, and implementation of measures consistent with FWS recovery plans and CDFG management plans. Stocking of Mad River steelhead will continue with measures intended to reduce the interaction between hatchery reared fish and naturally reproducing populations and consistent with the Draft Hatchery and Genetic Management Plan submitted to the National Marine Fisheries Service. The Fishing in the City and Classroom Aquarium Education Programs will continue using conservation measures and uniform protocols developed to ensure that stocking locations are properly screened to protect native, sensitive, and legally protected species. Implementation of Program activities associated with application of pre-stocking evaluation protocols or development of ABMPs, may require additional, site-specific NEPA compliance tiered from the EIR/EIS.

Continuation of Interim Program Provisions Alternative

Under the Continuation of Interim Program Provisions Alternative, FWS will continue to provide funding for operations of CDFG's 14 trout hatcheries and the Mad River Hatchery for steelhead, and associated stocking of fish produced at those hatcheries, consistent with the court-ordered prohibitions and exceptions on fish stocking that were put into place for the interim period between the date of the court order and completion of the EIR/EIS. The interim provisions prohibit stocking nonnative fish in any California fresh water body where surveys have demonstrated the presence of 25 specified amphibian or fish species, or where a survey for those species has not yet been completed. The order does not address the stocking of native fish into native waters. Exceptions to the prohibitions include stocking in human-made reservoirs larger than 1000 acres; stocking in human-made reservoirs less than 1000 acres that are not connected to a river or stream, are not within California red-legged frog critical habitat, or are not where California red-legged frogs are known to exist; stocking as required for State or Federal mitigation; stocking for the purpose of enhancing salmon and steelhead populations and funded by

the Commercial Trollers Salmon Stamp; stocking of steelhead from the Mad River Hatchery into the Mad River Basin; CDFG's Aquarium in the Classroom program; stocking actions to support scientific research; and stocking done under an existing private stocking permit or to be completed under a new permit with terms similar to one that was issued in the last 4 years. The Fishing in the City and Classroom Aquarium Education Programs will continue under uniform protocols developed to ensure that stocking locations are properly screened to protect native, sensitive, and legally protected species.

Continuation of Existing Program Alternative

The Continuation of Existing Program Alternative (equivalent to the CEQA No Project Alternative) is continuation of SFRA funding for the existing Fish Hatchery and Stocking Program. The hatcheries' operation and stocking activities undertaken by CDFG over the past 5 years would continue unchanged (some activities may be inconsistent with the court-ordered prohibitions and exceptions), and the SFRA funding process for these activities will continue as it has over the same period.

No Action Alternative

Under the No Action Alternative, FWS would not approve SFRA grant funds to be used by CDFG to support actions associated with operations of the CDFG Fish Hatchery and Stocking Program. Because of State statutory and public trust requirements related to the hatchery program, CDFG would attempt to continue to implement its State hatchery program, seeking other funding sources to replace the Federal funds.

Authority: National Environmental Policy Act (42 U.S.C. 4321 *et seq.*); Regulations for Implementing the Procedural Provisions of the National Environmental Policy Act (40 CFR 1500–1508).

Dated: December 16, 2009.

Ren Lohoefener,

Regional Director.

[FR Doc. 2010–2509 Filed 2–4–10; 8:45 am]

BILLING CODE 4310–55–P

DEPARTMENT OF THE INTERIOR

Bureau of Land Management

[LLCOS00000 L1120 PH]

Notice of Public Meeting, Southwest Colorado Resource Advisory Council Meeting

AGENCY: Bureau of Land Management.

ACTION: Notice of public meeting.

SUMMARY: In accordance with the Federal Land Policy and Management Act (FLPMA) and the Federal Advisory Committee Act of 1972 (FACA), the U.S. Department of the Interior, Bureau of Land Management (BLM) Southwest Colorado Resource Advisory Council (RAC) will meet in March 2010.

DATES: A Southwest Colorado RAC meeting will be held March 5, 2010.

ADDRESSES: The Southwest Colorado RAC meeting will be held March 5, 2010, at the Devil's Thumb Golf Course at 9900 Devil's Thumb Drive, Delta, CO 81416. The Southwest Colorado RAC meeting will begin at 9 a.m. and adjourn at approximately 4 p.m. A public comment period regarding matters on the agenda will be at 2:30 p.m.

FOR FURTHER INFORMATION CONTACT: Lori Armstrong, BLM Southwest District Manager, 2505 S. Townsend Avenue, Montrose, CO; telephone 970–240–5300; or Erin Curtis, Public Affairs Specialist, 2815 H Road, Grand Junction, CO, telephone 970–244–3097.

SUPPLEMENTARY INFORMATION: The Southwest Colorado RAC advises the Secretary of the Interior, through the Bureau of Land Management, on a variety of public land issues in Colorado.

Topics of discussion for all Southwest Colorado RAC meetings may include field manager and working group reports, recreation, fire management, land use planning, invasive species management, energy and minerals management, travel management, wilderness, land exchange proposals, cultural resource management, and other issues as appropriate.

These meetings are open to the public. The public may present written comments to the RACs. Each formal RAC meeting will also have time, as identified above, allocated for hearing public comments. Depending on the number of persons wishing to comment and time available, the time for individual oral comments may be limited.

Dated: January 22, 2010.

Lori Armstrong,

Southwest District Manager, Designated Federal Officer, Southwest Colorado RAC.

[FR Doc. 2010–1895 Filed 2–4–10; 8:45 am]

BILLING CODE P

INTERNATIONAL TRADE COMMISSION

[USITC SE–10–001]

Government in the Sunshine Act Meeting Notice

AGENCY HOLDING THE MEETING: United States International Trade Commission.

TIME AND DATE: February 12, 2010 at 11 a.m.

PLACE: Room 110, 500 E Street, SW., Washington, DC 20436, Telephone: (202) 205–2000.

STATUS: Open to the public.

MATTERS TO BE CONSIDERED:

1. Agenda for future meetings: none.
2. Minutes.
3. Ratification List.
4. Inv. Nos. 701–TA–474 and 731–TA–1176 (Preliminary) (Drill Pipe from China)—briefing and vote. (The Commission is currently scheduled to transmit its determinations to the Secretary of Commerce on or before February 16, 2010; Commissioners' opinions are currently scheduled to be transmitted to the Secretary of Commerce on or before February 23, 2010.)
5. Outstanding action jackets: None.

In accordance with Commission policy, subject matter listed above, not disposed of at the scheduled meeting, may be carried over to the agenda of the following meeting.

By order of the Commission.

Issued: February 2, 2010.

William R. Bishop,

Hearings and Meetings Coordinator.

[FR Doc. 2010–2630 Filed 2–3–10; 11:15 am]

BILLING CODE 7020–02–P

DEPARTMENT OF JUSTICE

Notice of Lodging of Consent Decree Under the Clean Air Act

Under 28 CFR 50.7, notice is hereby given that on Thursday, January 21, 2010, a proposed Consent Decree in *United States, et al.* v. *Lafarge North America, Inc., et al.,* Civil Action No. 10–CV–00044, was lodged with the United States District Court for the Southern District of Illinois.

In a complaint that was filed simultaneously with the Consent Decree, the United States seeks injunctive relief and penalties against Lafarge North America, Inc., Lafarge Midwest, Inc. and Lafarge Building Materials, Inc. (collectively "Lafarge Companies"), pursuant to Sections 113(b) and 167 of the Clean Air Act ("the Act"), 42 U.S.C. 7413(b) and 7477,

for alleged environmental violations of the Prevention of Significant Deterioration ("PSD") provisions of the Act, 42 U.S.C. 7470–7492; the nonattainment New Source Review ("nonattainment NSR") provisions of the Act, 42 U.S.C. 7501–7515; and the federally-approved and enforceable state implementation plans, which incorporate and/or implement the above listed federal PSD and/or nonattainment NSR requirements. The Complaint also alleges violations of Title V of the Act, 42 U.S.C. §§ 7661–7661f, and Title V's implementing Federal and State regulations. These violations are alleged to have occurred at one or more of each of the Lafarge Companies' Portland cement plants located in Alpena, Michigan; Ravena, New York; Tulsa, Oklahoma; Fredonia, Kansas; Sugar Creek, Missouri; Buffalo, Iowa; Paulding, Ohio; Gand Chain, Illinois; Seattle, Washington; Whitehall, Pennsylvania; Harleyville, South Carolina; Atlanta, Georgia; and Calera, Alabama.

Under the proposed settlement, the Lafarge Companies will be required to implement pollution control technologies to reduce emissions of nitrogen oxides and sulfur dioxide at designated cement kilns and to meet emission limits which are either set forth in the Consent Decree or will be set later by following procedures specified in the Decree. In addition, the Lafarge Companies must pay a total civil penalty of $5,075,000. Two-thirds of this penalty ($3,383,000) will be paid to the United States, and the remaining one-third will be shared among the participating states and agencies as set forth in the Consent Decree.

The States of Alabama, Illinois, Iowa, Kansas, Michigan, Missouri, New York, Ohio and the Commonwealth of Pennsylvania Department of Environmental Protection, the South Carolina Department of Health and Environmental Control, the Washington State Department of Ecology, the Oklahoma Department of Environmental Quality, and the Puget Sound Clean Air Agency have joined in this settlement as signatories to the Consent Decree.

The Department of Justice will receive for a period of thirty (30) days from the date of this publication comments relating to the Consent Decree. Comments should be addressed to the Assistant Attorney General, Environment and Natural Resources Division, and either mailed to *pubcomment-ees.enrd@usdoj.gov* or mailed to P.O. Box 7611, U.S. Department of Justice, Washington, DC 20044–7611, and should refer to *United States, et al.* v. *Lafarge North America, Inc., et al.,* D.J. Ref. 90–5–2–1–08221.

The Consent Decree may be examined at the Office of the United States Attorney, Nine Executive Drive, Fairview Heights, Illinois 62208–1344 and at U.S. EPA Region 5, 77 West Jackson Blvd., Chicago, Illinois 60604–3590. During the public comment period, the Consent Decree may also be examined on the following Department of Justice Web site, *http://www.usdoj.gov/enrd/Consent_Decrees.html.* A copy of the Consent Decree may also be obtained by mail from the Consent Decree Library, P.O. Box 7611, U.S. Department of Justice, Washington, DC 20044–7611 or by faxing or e-mailing a request to Tonia Fleetwood (*tonia.fleetwood@usdoj.gov*), fax number (202) 514–0097, phone confirmation number (202) 514–1547. In requesting a copy from the Consent Decree Library, please enclose a check in the amount of $38.00 (25 cents per page reproduction cost) payable to the U.S. Treasury or, if by e-mail or fax, forward a check in that amount to the Consent Decree Library at the stated address.

Maureen Katz,

Assistant Section Chief, Environmental Enforcement Section, Environment and Natural Resources Division.

[FR Doc. 2010–2489 Filed 2–4–10; 8:45 am]

BILLING CODE 4410–15–P

DEPARTMENT OF JUSTICE

Drug Enforcement Administration

Importer of Controlled Substances; Notice of Registration

By Notice dated January 9, 2009, and published in the **Federal Register** on January 21, 2009, (74 FR 3641), Kenco VPI, Division of Kenco Group, Inc., 350 Corporate Place, Chattanooga, Tennessee 37419, made application by renewal to the Drug Enforcement Administration (DEA) to be registered as an importer of Nabilone (7379), a basic class of controlled substance listed in schedule II.

The company plans to import the listed controlled substance for distribution to its customers.

One comment was received concerning this application. The comment states that DEA added Schedule II and the drug code for Nabilone (7379) to Kenco VPI's importer registration without the benefit of the required legal process for modifying the DEA registration. The comment further states that, after Kenco VPI was properly registered as an importer of Nabilone on November 1, 2006, there was no further mention of Nabilone in any subsequent notices of Kenco VPI's applications or approval of its applications published in the **Federal Register** by DEA until the application published on January 21, 2009. (74 FR 3641) The comment also requested clarification whether Kenco VPI imports Nabilone in finished drug product in dosage form or in bulk active pharmaceutical ingredient (API) form. Finally, the comment inquires if the aggregate national quota for Nabilone established by DEA will be affected by Kenco VPI's application.

DEA's response to the issues raised in the comment are as follows: DEA has already admitted that Kenco VPI's importer registration received Schedule II and the drug code for Nabilone without the benefit of the required legal process. On August 1, 2006, a Notice of Application (71 FR 43526) was published for Kenco VPI in the **Federal Register**. Subsequently, on November 1, 2006, a Notice of Registration (71 FR 64298) was published. These notices addressed DEA's issuance to Kenco VPI's importer registration of Schedule II and the drug code for Nabilone without the benefit of the required legal process. As a result of the publication of these notices, Kenco VPI's importer registration has been legally authorized to import Nabilone, effective: November 1, 2006.

DEA rejects the comment's assertion that, between November 1, 2006 and January 21, 2009, there was no further mention of Nabilone in any subsequent notices of Kenco VPI's applications or approval of its applications published in the **Federal Register** by DEA. This assertion is incorrect. Four notices were published between November 1, 2006 and January 21, 2009 as follows: (71 FR 66974, November 17, 2006), (72 FR 8792, February 27, 2007), (73 FR 14840, March 19, 2008), (73 FR 31510, June 2, 2008). Each of these notices mentions Nabilone.

With regard to the comment's request for clarification of whether Kenco VPI imports Nabilone in finished drug product in dosage form or in bulk active pharmaceutical ingredient (API) form, the company imports finished drug products in dosage form only. Kenco VPI does not import Nabilone in bulk active pharmaceutical ingredient (API) form. Since there are no domestic sources of Nabilone in finished drug product form available within the United States and since the product which Kenco VPI imports has been approved for medical use within the United States by the U.S. Food and Drug Administration, DEA finds no reason to reject Kenco VPI's application. The

aggregate national quota for Nabilone established by DEA will not be affected by this application of Kenco VPI since the company imports Nabilone in finished drug product form only.

DEA has considered the factors in 21 U.S.C. 823(a) and 952(a) and determined that the registration of Kenco VPI to import the basic class of controlled substance is consistent with the public interest, and with United States obligations under international treaties, conventions, or protocols in effect on May 1, 1971, at this time. DEA has investigated Kenco VPI to ensure that the company's registration is consistent with the public interest. The investigation has included inspection and testing of the company's physical security systems, verification of the company's compliance with state and local laws, and a review of the company's background and history. Therefore, pursuant to 21 U.S.C. 952(a) and § 958(a), and in accordance with 21 CFR 1301.34, the above named company is granted registration as an importer of the basic class of controlled substance listed.

Dated: January 29, 2010.

Joseph T. Rannazzisi,

Deputy Assistant Administrator, Office of Diversion Control, Drug Enforcement Administration.

[FR Doc. 2010–2570 Filed 2–4–10; 8:45 am]

BILLING CODE 4410–09–P

DEPARTMENT OF JUSTICE

Drug Enforcement Administration

Importer of Controlled Substances; Notice of Application

Pursuant to 21 U.S.C. 958(i), the Attorney General shall, prior to issuing a registration under this Section to a bulk manufacturer of a controlled substance in schedule I or II, and prior to issuing a regulation under 21 U.S.C. 952(a)(2), authorizing the importation of such a substance, provide manufacturers holding registrations for the bulk manufacture of the substance an opportunity for a hearing.

Therefore, in accordance with 21 CFR 1301.34(a), this is notice that on April 3, 2009, Wildlife Laboratories, 1401 Duff Drive, Suite 400, Fort Collins, Colorado 80524, made application by renewal to the Drug Enforcement Administration (DEA) to be registered as an importer of Etorphine Hydrochloride (9059), a basic class of controlled substance listed in schedule II.

The company plans to import the listed controlled substance for sale to its customers.

Any bulk manufacturer who is presently, or is applying to be, registered with DEA to manufacture such basic class of controlled substance may file comments or objections to the issuance of the proposed registration and may, at the same time, file a written request for a hearing on such application pursuant to 21 CFR 1301.43, and in such form as prescribed by 21 CFR 1316.47.

Any such written comments or objections should be addressed, in quintuplicate, to the Drug Enforcement Administration, Office of Diversion Control, **Federal Register** Representative (ODL), 8701 Morrissette Drive, Springfield, Virginia 22152; and must be filed no later than March 8, 2010.

This procedure is to be conducted simultaneously with, and independent of, the procedures described in 21 CFR 1301.34(b), (c), (d), (e), and (f). As noted in a previous notice published in the **Federal Register** on September 23, 1975, (40 FR 43745–46), all applicants for registration to import a basic class of any controlled substance in schedule I or II are, and will continue to be, required to demonstrate to the Deputy Assistant Administrator, Office of Diversion Control, Drug Enforcement Administration, that the requirements for such registration pursuant to 21 U.S.C. 958(a), 21 U.S.C. 823(a), and 21 CFR 1301.34(b), (c), (d), (e), and (f) are satisfied.

Dated: January 27, 2010.

Joseph T. Rannazzisi,

Deputy Assistant Administrator, Office of Diversion Control, Drug Enforcement Administration.

[FR Doc. 2010–2575 Filed 2–4–10; 8:45 am]

BILLING CODE 4410–09–P

DEPARTMENT OF JUSTICE

Drug Enforcement Administration

Manufacturer of Controlled Substances Notice of Registration

By Notice dated August 21, 2009, and published in the **Federal Register** on September 8, 2009, (74 FR 46232), Research Triangle Institute, Kenneth H. Davis Jr., Hermann Building, East Institute Drive, P.O. Box 12194, Research Triangle, North Carolina 27709, made application by renewal to the Drug Enforcement Administration (DEA) to be registered as a bulk manufacturer of the basic classes of controlled substances listed in schedules I and II:

Drug	Schedule
Marihuana (7360)	I
Tetrahydrocannabinols (7370)	I
Cocaine (9041)	I

The Institute will manufacture small quantities of cocaine and marihuana derivatives for use by their customers in analytical kits, reagents, and reference standards as directed by the National Institute on Drug Abuse.

No comments or objections have been received. DEA has considered the factors in 21 U.S.C. 823(a) and determined that the registration of Research Triangle Institute to manufacture the listed basic classes of controlled substances is consistent with the public interest at this time. DEA has investigated Research Triangle Institute to ensure that the company's registration is consistent with the public interest. The investigation has included inspection and testing of the company's physical security systems, verification of the company's compliance with state and local laws, and a review of the company's background and history. Therefore, pursuant to 21 U.S.C. 823, and in accordance with 21 CFR 1301.33, the above named company is granted registration as a bulk manufacturer of the basic classes of controlled substances listed.

Dated: January 25, 2010.

Joseph T. Rannazzisi,

Deputy Assistant Administrator, Office of Diversion Control, Drug Enforcement Administration.

[FR Doc. 2010–2578 Filed 2–4–10; 8:45 am]

BILLING CODE 4410–09–P

MARINE MAMMAL COMMISSION

Notice of Meeting

Time and Date: The Marine Mammal Commission will conduct a review of the potential effects of human activities, including aquaculture operations, on harbor seals in Drake's Estero, Mann County, California, on 21–24 February 2010 from 9 a.m. to approximately 6 p.m.

Place: The Red Barn, Point Reyes National Seashore, I Bear Valley Road, Point Reyes Station, CA 94956.

Status: Sessions on Sunday, February 21, and Tuesday and Wednesday, February 23–24 will be open to the public. Public participation will be allowed as time permits and as determined to be desirable by the meeting chairperson. There will be no public meeting on Monday, February 22.

Matters To Be Considered: An independent review panel will meet on Sunday, February 21, to hear presentations on potential sources of disturbance for harbor seals in Drake's Estero. The meeting will adjourn on Monday, February 22, to allow panel members to make a site visit. The panel will reconvene on Tuesday and Wednesday, 23–24 February, to consider and discuss the information received. Additional information on the review is available on the Commission's Web site at *http://www.mmc.gov.* A meeting agenda will be posted on the site when it is finalized.

FOR FURTHER INFORMATION CONTACT: Suzanne Montgomery, Special Assistant to the Executive Director, Marine Mammal Commission, 4340 East-West Highway, Room 700, Bethesda, MD 20814; 301–504–0087; e-mail: *smontgomery@mmc.gov.*

Dated: February 1, 2010.

Timothy J. Ragen,

Executive Director.

[FR Doc. 2010–2379 Filed 2–4–10; 8:45 am]

BILLING CODE 6820–31–M

NATIONAL SCIENCE FOUNDATION

Committee on Equal Opportunities in Science and Engineering (CEOSE); Notice of Meeting

In accordance with the Federal Advisory Committee Act (Pub. L. 92–463, as amended), the National Science Foundation announces the following meeting:

Name: Committee on Equal Opportunities in Science and Engineering (1173).

Dates/Time: March 8, 2010, 8:30 a.m.–5:30 p.m.; March 9, 2010, 8:30 a.m.–2 p.m.

Place: National Science Foundation (NSF), 4201 Wilson Boulevard, Arlington, VA 22230.

To help facilitate your access into the building, please contact the individual listed below prior to the meeting so that a visitors badge may be prepared for you in advance.

Type of Meeting: Open.

Contact Person: Dr. Margaret E.M. Tolbert, Senior Advisor and CEOSE Executive Liaison, Office of Integrative Activities, National Science Foundation, 4201 Wilson Boulevard, Arlington, VA 22230.

Telephone Numbers: (703) 292–4216, 703–292–8040 *mtolbert@nsf.gov.*

Minutes: Minutes may be obtained from the Executive Liaison at the above address or the Web site at *http://www.nsf.gov/od/oia/activities/ceose/index.jsp.*

Purpose of Meeting: To study NSF programs and policies and provide advice and recommendations concerning broadening participation in science and engineering.

Agenda

Primary Focus of This Meeting—Orientation to the National Science Foundation.

Monday, March 8, 2010

Opening Statement by the CEOSE Chair.
Presentations and Discussions:
✓ Discussion of the CEOSE Congressional Mandate with the General Counsel of the National Science Foundation.
✓ A Conversation with the Director of the National Science Foundation.
✓ Planning and Implementing Future Mini-Symposia.
✓ National Science Foundation Performance and Budget in General.
✓ Social, Behavioral, and Economic Sciences.
✓ Broadening Participation—A National Perspective.

Tuesday, March 9, 2010

Opening Statement by the CEOSE Chair.
Presentations, Discussions, and Reports:
✓ The Mini-Symposium on Women of Color in STEM—A Report.
✓ An Overview of the National Science Foundation.
✓ CEOSE Recommendations, 1999–2008.
✓ Reports by CEOSE Liaisons to Advisory Committees of the National Science Foundation.
✓ Review of CEOSE Action Items.
✓ Completion of Unfinished Business.

Dated: February 2, 2010.

Susanne Bolton,

Committee Management Officer.

[FR Doc. 2010–2499 Filed 2–4–10; 8:45 am]

BILLING CODE 7555–01–P

NUCLEAR REGULATORY COMMISSION

[NRC–2010–0003]

Availability of NRC Open Government Web Site

AGENCY: Nuclear Regulatory Commission.

ACTION: Notice of Availability of Open Government Web site for Online Public Comments.

SUMMARY: This notice, which follows up on a January 11, 2010 (75 FR 1418), **Federal Register** notice, informs the public that the Nuclear Regulatory Commission's (NRC) Open Government Web site *(http://www.nrc.gov/open)* will be available by February 6, 2010, and directs that, after February 10, 2010, any public comments regarding NRC publication of high-value data sets or the NRC Open Government Plan should be submitted online at this Open Government Web site rather than through mail, fax, or the *http://www.regulations.gov* Web site.

FOR FURTHER INFORMATION CONTACT: James B. Schaeffer, Deputy Director, Office of Information Services, (301) 415–7330, *James.Schaeffer@nrc.gov.*

SUPPLEMENTAL INFORMATION: On January 11, 2010, the **Federal Register** published an NRC notice (75 FR 1418) soliciting public comment on the NRC's implementation of the Office of Management and Budget's December 8, 2009, Open Government Directive. Specifically, the **Federal Register** notice solicited comments on (1) which high-value data sets NRC should publish on the data.gov Web site and (2) the Open Government Plan that the NRC is in the process of developing. The NRC requested that comments on publication of high-value data sets be submitted as soon as possible, in light of the NRC's interest in publishing high-value data sets by date set forth in the Open Government Directive (January 22, 2010). But the NRC also stated that it may decide to publish additional data sets after January 22, 2010, and so even comments submitted too late to be considered with respect to this initial effort to publish data sets were nonetheless welcome. The NRC also requested that any comments on the Open Government Plan be submitted by February 10, 2010, and provided options for submitting comments by mail, fax, or at *http://www.regulations.gov,* but also stated that the forthcoming NRC Open Government Web site would provide additional opportunities for commenting on the Open Government Plan.

As noted in the January 11, 2010, **Federal Register** notice, and consistent with the Open Government Directive, the NRC's Open Government Web page *(http://www.nrc.gov/open)* will be available by February 6, 2010. This Web site will provide convenient access at a single location to NRC open government information, including any public comments the NRC has received regarding publication of high-value data sets or the NRC Open Government Plan. The Open Government Web site will allow for submission of online comments on publication of high-value data sets as well as the NRC's Open Government Plan, and will also feature other capabilities and tools for providing input and sharing ideas.

Accordingly, once the comment period announced in the January 11, 2010, **Federal Register** notice closes on February 10, 2010, members of the public will still be able to submit comments on NRC high-value data set publication and the NRC Open Government Plan by using the NRC's Open Government Web site. Because the NRC plans to include on this Open

Government Web site all public comments regarding NRC implementation of the Open Government Directive (including any comments submitted by mail, fax, or through the *http://www.regulations.gov* Web site in accordance with the January 11, 2010, **Federal Register** notice), the NRC requests that, after February 10, 2010, any comments on NRC publication of high-value data sets or the NRC's Open Government Plan be submitted online at *http://www.nrc.gov/open,* rather than by using mail, fax, or *regulations.gov.*

Because any comments submitted on the NRC's Open Government Web site will not be edited to remove any identifying or contact information, the NRC cautions you against including any information in your submission that you do not want to be publicly disclosed.

The NRC requests that any party soliciting or aggregating comments received from other persons for submission to the NRC inform those persons that the NRC will not edit their comments to remove any identifying or contact information and, therefore, they should not include any information in their comments that they do not want publicly disclosed.

Dated at Rockville, Maryland, this 29th day of January 2010.

For the Nuclear Regulatory Commission.

R. William Borchardt,

Executive Director for Operations.

[FR Doc. 2010–2533 Filed 2–4–10; 8:45 am]

BILLING CODE 7590–01–P

NUCLEAR REGULATORY COMMISSION

[NRC–2010–0034]

Draft Emergency Action Level Frequently Asked Questions; Request for Comment

AGENCY: Nuclear Regulatory Commission.

ACTION: Notice of availability and opportunity for public comment.

SUMMARY: The U.S. Nuclear Regulatory Commission (NRC) is making available for comment an Emergency Action Level (EAL) frequently asked question (FAQ). This EALFAQ will be used to provide clarification of endorsed Nuclear Energy Institute (NEI) guidance related to the development of security related EALs. This EALFAQ was developed by the NRC at the request of NEI. The NRC is publishing this preliminary result to inform the public and solicit comments.

DATES: Submit comments by March 8, 2010. Comments submitted after this date will be considered if it is practical to do so, but assurance of consideration cannot be given except for comments received on or before this date.

ADDRESSES: Please include Docket ID NRC–2010–0034 in the subject line of your comments. Comments submitted in writing or in electronic form will be posted on the NRC Web site and on the Federal rulemaking Web site Regulations.gov. Because your comments will not be edited to remove any identifying or contact information, the NRC cautions you against including any information in your submission that you do not want to be publicly disclosed.

The NRC requests that any party soliciting or aggregating comments received from other persons for submission to the NRC inform those persons that the NRC will not edit their comments to remove any identifying or contact information, and therefore, they should not include any information in their comments that they do not want publicly disclosed.

You may submit comments by any one of the following methods:

Federal Rulemaking Web site: Go to *http://www.regulations.gov* and search for documents filed under Docket ID NRC–2010–0034. Comments may be submitted electronically through this Web site. Address questions about NRC dockets to Carol Gallagher 301–492–3668; e-mail *Carol.Gallagher@nrc.gov.*

Mail comments to: Michael T. Lesar, Chief, Rulemaking and Directives Branch (RDB), Division of Administrative Services, Office of Administration, Mail Stop: TWB–05–B01M, U.S. Nuclear Regulatory Commission, Washington, DC 20555–0001, or by fax to RDB at (301) 492–3446.

You can access publicly available documents related to this notice using the following methods:

NRC's Public Document Room (PDR): The public may examine and have copied for a fee, publicly available documents at the NRC's PDR, Public File Area O–1F21, One White Flint North, 11555 Rockville Pike, Rockville, Maryland.

NRC's Agencywide Documents Access and Management System (ADAMS): Publicly available documents created or received at the NRC are available electronically at the NRC's Electronic Reading Room at *http://www.nrc.gov/reading-rm/adams.html.* From this page, the public can gain entry into ADAMS, which provides text and image files of NRC's public documents. If you do not have access to ADAMS or if there are problems in accessing the documents located in ADAMS, contact the NRC's PDR reference staff at 1–800–397–4209, 301–415–4737, or by e-mail to *pdr.resource@nrc.gov.* The ADAMS accession number for the Draft EALFAQ is ML100070115. The draft question is also available on the NRC Web site at *http://www.nrc.gov/about-nrc/emerg-preparedness/emerg-action-level-dev.htm.* The ADAMS accession number for NEI 99–01, Revision 5, "Methodology for Development of Emergency Action Levels," is ML080450149.

Federal Rulemaking Web site: Public comments and supporting materials related to this notice can be found at *http://www.regulations.gov* by searching on Docket ID: NRC–2010–0034.

FOR FURTHER INFORMATION CONTACT: Don A. Johnson, Office of Nuclear Security and Incident Response, Mail Stop T3–B46M, U.S. Nuclear Regulatory Commission, Washington, DC 20555–0001, 301–415–4040 or by e-mail at *Don.Johnson@nrc.gov.*

SUPPLEMENTARY INFORMATION: The NRC is requesting comment on this draft EALFAQ. The NRC has developed this pilot program for the staff to provide clarification of endorsed EAL development guidance [ADAMS accession number for the EALFAQ process is ML051950213]. This process is intended to describe the manner in which the NRC may provide interested outside parties an opportunity to share their individual views with NRC staff regarding the appropriate response to questions raised on the interpretation or applicability of emergency preparedness regulatory guidance issued by the NRC, before the NRC issues an official response to such questions.

Dated at Rockville, MD this 21st day of January, 2010.

For the Nuclear Regulatory Commission.

Kevin Williams,

Deputy Director (Acting) for Emergency Preparedness, Division of Preparedness and Response, Office of Nuclear Security and Incident Response.

[FR Doc. 2010–2545 Filed 2–4–10; 8:45 am]

BILLING CODE 7590–01–P

NUCLEAR REGULATORY COMMISSION

[Docket No. 50–305; NRC–2010–0041]

Dominion Energy Kewaunee, Inc.; Kewaunee Power Station; Notice of Availability of the Draft Supplement 40 to the Generic Environmental Impact Statement for License Renewal of Nuclear Plants and Public Meetings for the License Renewal of Kewaunee Power Station

Notice is hereby given that the U.S. Nuclear Regulatory Commission (NRC or Commission) has published a draft plant-specific supplement to the Generic Environmental Impact Statement for License Renewal of Nuclear Plants (GEIS), NUREG–1437, regarding the renewal of Operating License No. DPR–43 for an additional 20 years of operation for Kewaunee Power Station (KPS). KPS is located in Kewaunee County, Wisconsin, on the west-central shore of Lake Michigan. Possible alternatives to the proposed action (license renewal) include no action and reasonable alternative energy sources.

The draft Supplement 40 to the GEIS is publicly available at the NRC Public Document Room (PDR), located at One White Flint North, 11555 Rockville Pike, Rockville, Maryland 20852, or from the NRC's Agencywide Documents Access and Management System (ADAMS). The ADAMS Public Electronic Reading Room is accessible at *http://adamswebsearch.nrc.gov/dologin.htm.* The Accession Number for the draft Supplement 40 to the GEIS is ML100240002. Persons who do not have access to ADAMS, or who encounter problems in accessing the documents located in ADAMS, should contact the NRC's PDR reference staff by telephone at 1–800–397–4209, or 301–415–4737, or by e-mail at *pdr.resource@nrc.gov.* In addition, a copy of the draft supplement to the GEIS is available to local residents near the site at the Kewaunee Public Library, 822 Juneau Street, Kewaunee, Wisconsin 54216.

Any interested party may submit comments on the draft supplement to the GEIS for consideration by the NRC staff. To be considered, comments on the draft supplement to the GEIS and the proposed action must be received by April 23, 2010; the NRC staff is able to ensure consideration only for comments received on or before this date. Comments received after the due date will be considered only if it is practical to do so. Written comments on the draft supplement to the GEIS should be sent to: Chief, Rulemaking and Directives Branch, Division of Administrative Services, Office of Administration, Mailstop TWB 5B01, U.S. Nuclear Regulatory Commission, Washington, DC 20555–0001.

Electronic comments may be submitted to the NRC by e-mail at *KewauneeEIS.Resource@nrc.gov.* All comments received by the Commission, including those made by Federal, State, local agencies, Native American Tribes, or other interested persons, will be made available electronically at the Commission's PDR in Rockville, Maryland, and through ADAMS.

The NRC staff will hold a public meeting to present an overview of the draft plant-specific supplement to the GEIS and to accept public comments on the document. The public meeting will be held on March 24, 2010, at the City of Carlton Town Hall, N1296 Town Hall Road, Kewaunee, WI 54216. There will be two sessions to accommodate interested parties. The first session will convene at 1:30 p.m. and will continue until 4:30 p.m., as necessary. The second session will convene at 7 p.m. and will continue until 10 p.m., as necessary. Both meetings will be transcribed and will include: (1) A presentation of the contents of the draft plant-specific supplement to the GEIS, and (2) the opportunity for interested government agencies, organizations, and individuals to provide comments on the draft report. Additionally, the NRC staff will host informal discussions one hour prior to the start of each session at the same location. No comments on the draft supplement to the GEIS will be accepted during the informal discussions. To be considered, comments must be provided either at the transcribed public meeting or in writing. Persons may pre-register to attend or present oral comments at the meeting by contacting Ms. Vanice Perin, the NRC Environmental Project Manager at 1–800–368–5642, extension 8143, or by e-mail at *Vanice.Perin@nrc.gov,* no later than Tuesday, March 16, 2010. Members of the public may also register to provide oral comments within 15 minutes of the start of each session. Individual, oral comments may be limited by the time available, depending on the number of persons who register. If special equipment or accommodations are needed to attend or present information at the public meeting, the need should be brought to Ms. Perin's attention no later than March 16, 2010, to provide the NRC staff adequate notice to determine whether the request can be accommodated.

FOR FURTHER INFORMATION CONTACT: Ms. Vanice Perin, Projects Branch 1, Division of License Renewal, Office of Nuclear Reactor Regulation, U.S. Nuclear Regulatory Commission, Mail Stop O–11F1, Washington, DC 20555–0001. Ms. Perin may be contacted at the aforementioned telephone number or e-mail address.

Dated at Rockville, Maryland, this 29th day of January, 2010.

For the Nuclear Regulatory Commission.

Bo M. Pham,

Chief, Projects Branch 1, Division of License Renewal, Office of Nuclear Reactor Regulation.

[FR Doc. 2010–2552 Filed 2–4–10; 8:45 am]

BILLING CODE 7590–01–P

NUCLEAR REGULATORY COMMISSION

[NRC–2009–0364]

Extension of Public Comment Period on the Draft Environmental Impact Statement for the Moore Ranch In-Situ Recovery Project in Campbell County, WY; Supplement to the Generic Environmental Impact Statement for In-Situ Leach Uranium Milling Facilities

AGENCY: Nuclear Regulatory Commission (NRC).

ACTION: Extension of Public Comment Period.

SUMMARY: This notice revises a notice published on Friday, December 11, 2009, in the **Federal Register** (74 FR 65806), which announced, in part, that the public comment period for the NRC's Draft Supplemental Environmental Impact Statement (Draft SEIS) for the Moore Ranch *In-Situ* Recovery (ISR) Project closes on February 1, 2010. The purpose of this notice is to extend the public comment period on the Draft SEIS for the Moore Ranch ISR Project to March 3, 2010.

DATES: Members of the public have been submitting written comments on the Draft SEIS for the Moore Ranch ISR Project since the initial notice of availability was published on December 11, 2009 (74 FR 65806). In response to multiple requests received in writing, the comment period on the Draft SEIS is being extended to March 3, 2010. The NRC will consider comments received or postmarked after that date to the extent practical. Written comments should be submitted as described in the **ADDRESSES** section of this notice.

ADDRESSES: You may submit comments by any one of the following methods. Please include Docket ID NRC–2009–0364 in the subject line of your comments. Comments submitted in writing or in electronic form will be posted on the NRC Web site and on the

Federal rulemaking Web site *http://www.regulations.gov.* Because your comments will not be edited to remove any identifying or contact information, the NRC cautions you against including any information in your submission that you do not want to be publicly disclosed.

The NRC requests that any party soliciting or aggregating comments received from other persons for submission to the NRC inform those persons that the NRC will not edit their comments to remove any identifying or contact information, and therefore, they should not include any information in their comments that they do not want publicly disclosed.

Federal Rulemaking Web site: Go to *http://www.regulations.gov* and search for documents filed under Docket ID NRC–2009–0364. Comments may be submitted electronically through this Web site. Address questions about NRC dockets to Carol Gallagher at 301–492–3668, or e-mail at *Carol.Gallagher@nrc.gov.*

Mail comments to: Michael T. Lesar, Chief, Rulemaking and Directives Branch (RDB), Division of Administrative Services, Office of Administration, Mail Stop: TWB–05–B01M, U.S. Nuclear Regulatory Commission, Washington, DC 20555–0001, or by fax to RDB at (301) 492–3446. You may also send comments electronically to *MooreRanchISRSEIS@nrc.gov.*

FOR FURTHER INFORMATION CONTACT: For general information on the NRC's NEPA process, or the environmental review process related to the Draft SEIS, please contact Behram Shroff, Project Manager, Environmental Review Branch, Division of Waste Management and Environmental Protection (DWMEP), Mail Stop T–8F5, U.S. Nuclear Regulatory Commission, Washington, DC 20555–0001, by phone at 1 (800) 368–5642, extension 0666. For general or technical information associated with the safety and licensing of uranium milling facilities, please contact Stephen Cohen, Team Lead, Uranium Recovery Branch, DWMEP, Mail Stop T–8F5, U.S. Nuclear Regulatory Commission, Washington, DC 20555–0001, by phone at 1 (800) 368–5642, extension 7182.

SUPPLEMENTARY INFORMATION:

I. Introduction

As stated previously, in response to several requests during the public comment period, the NRC is extending the Draft SEIS comment period close date from February 1, 2010, to March 3, 2010. The comment period extension is in response to public comments indicating (1) the original comment period for the Draft SEIS included multiple Federal holidays, and (2) the Draft SEIS for the Moore Ranch ISR Project was published concurrently with two additional NRC Draft SEISs (the Lost Creek ISR Project in Sweetwater County, Wyoming, and the Nichols Ranch ISR Project in Campbell and Johnson Counties, Wyoming).

Following the end of the public comment period, the NRC staff will publish a Final SEIS for the Moore Ranch ISR Project that addresses, as appropriate, the public comments on the Draft SEIS.

II. Further Information

Publicly available documents related to this notice can be accessed using the following methods:

NRC's Public Document Room (PDR): The public may examine and have copied, for a fee, publicly available documents at the NRC's PDR, Public File Area O1 F21, One White Flint North, 11555 Rockville Pike, Rockville, Maryland.

NRC's Agencywide Documents Access and Management System (ADAMS): Publicly available documents created or received at the NRC are available electronically at the NRC's Electronic Reading Room at *http://www.nrc.gov/reading-rm/adams.html.* From this page, the public can gain entry into ADAMS, which provides text and image files of NRC's public documents. If you do not have access to ADAMS or if there are problems in accessing the documents located in ADAMS, contact the NRC's PDR reference staff at 1–800–397–4209, (301) 415–4737, or by e-mail to *Pdr.Resource@nrc.gov.* The "Environmental Impact Statement for the Moore Ranch ISR Project in Campbell County, Wyoming—Supplement to the Generic Environmental Impact Statement for *In-Situ* Leach Uranium Milling Facilities" is available electronically under ADAMS Accession Number ML093350050.

The Draft SEIS for the Moore Ranch ISR Project also may be accessed on the internet at *http://www.nrc.gov/reading-rm/doc-collections/nuregs/staff/* by selecting "NUREG–1910." The Draft SEIS will be Supplement 1 to NUREG–1910. To facilitate review, links to NEPA documents developed by other federal agencies that were referenced in the Draft SEIS will be provided at the aforementioned internet address. Additionally, a copy of the Draft SEIS will be available at the following public library: Campbell County Public Library, 2101 South 4J Road, Gillette, Wyoming 82718, 307–687–0009.

Dated at Rockville, Maryland, this 1st day of February, 2010.

For the Nuclear Regulatory Commission.

Patrice M. Bubar,

Deputy Director, Environmental Protection and Performance Assessment Directorate, Division of Waste Management and Environmental Protection, Office of Federal and State Materials and Environmental Management Programs.

[FR Doc. 2010–2528 Filed 2–4–10; 8:45 am]

BILLING CODE 7590–01–P

NUCLEAR REGULATORY COMMISSION

[NRC–2008–0339]

Extension of Public Comment Period on the Draft Environmental Impact Statement for the Nichols Ranch In-Situ Recovery Project in Campbell and Johnson Counties, WY; Supplement to the Generic Environmental Impact Statement for In-Situ Leach Uranium Milling Facilities

AGENCY: Nuclear Regulatory Commission (NRC).

ACTION: Extension of Public Comment Period.

SUMMARY: This notice revises a notice published on Friday, December 11, 2009, in the **Federal Register** (74 FR 65808), which announced, in part, that the public comment period for the NRC's Draft Supplemental Environmental Impact Statement (Draft SEIS) for the Nichols Ranch *In-Situ* Recovery (ISR) Project closes on February 1, 2010. The purpose of this notice is to extend the public comment period on the Draft SEIS for the Nichols Ranch ISR Project to March 3, 2010.

DATES: Members of the public have been submitting written comments on the Draft SEIS for the Nichols Ranch ISR Project since the initial notice of availability was published on December 11, 2009 (74 FR 65808). In response to multiple requests received in writing, the comment period on the Draft SEIS is being extended to March 3, 2010. The NRC will consider comments received or postmarked after that date to the extent practical. Written comments should be submitted as described in the **ADDRESSES** section of this notice.

ADDRESSES: You may submit comments by any one of the following methods. Please include Docket ID NRC–2008–0339 in the subject line of your comments. Comments submitted in writing or in electronic form will be posted on the NRC Web site and on the Federal rulemaking Web site *http://www.regulations.gov.* Because your comments will not be edited to remove

any identifying or contact information, the NRC cautions you against including any information in your submission that you do not want to be publicly disclosed.

The NRC requests that any party soliciting or aggregating comments received from other persons for submission to the NRC inform those persons that the NRC will not edit their comments to remove any identifying or contact information, and therefore, they should not include any information in their comments that they do not want publicly disclosed.

Federal Rulemaking Web site: Go to *http://www.regulations.gov* and search for documents filed under Docket ID NRC–2008–0339. Comments may be submitted electronically through this Web site. Address questions about NRC dockets to Carol Gallagher at 301–492–3668, or e-mail at *Carol.Gallagher@nrc.gov*.

Mail comments to: Michael T. Lesar, Chief, Rulemaking and Directives Branch (RDB), Division of Administrative Services, Office of Administration, Mail Stop: TWB–05–B01M, U.S. Nuclear Regulatory Commission, Washington, DC 20555–0001, or by fax to RDB at (301) 492–3446. You may also send comments electronically to *NicholsRanchISRSEIS@nrc.gov*.

FOR FURTHER INFORMATION CONTACT: For general information on the NRC's NEPA process, or the environmental review process related to the Draft SEIS, please contact Irene Yu, Project Manager, Environmental Review Branch, Division of Waste Management and Environmental Protection (DWMEP), Mail Stop T–8F5, U.S. Nuclear Regulatory Commission, Washington, DC, 20555–001, by phone at 1 (800) 368–5642, extension 1951. For general or technical information associated with the safety and licensing of uranium milling facilities, please contact Stephen Cohen, Team Lead, Uranium Recovery Branch, DWMEP, Mail Stop T–8F5, U.S. Nuclear Regulatory Commission, Washington, DC 20555–0001, by phone at 1 (800) 368–5642, extension 7182.

SUPPLEMENTARY INFORMATION:

I. Introduction

As stated previously, in response to several requests during the public comment period, the NRC is extending the Draft SEIS comment period close date from February 1, 2010, to March 3, 2010. The comment period extension is in response to public comments indicating (1) the original comment period for the Draft SEIS included multiple Federal holidays, and (2) the Draft SEIS for the Nichols Ranch ISR Project was published concurrently with two additional NRC Draft SEISs (the Lost Creek ISR Project in Sweetwater County, Wyoming, and the Moore Ranch ISR Project in Campbell County, Wyoming).

Following the end of the public comment period, the NRC staff will publish a Final SEIS for the Nichols Ranch ISR Project that addresses, as appropriate, the public comments on the Draft SEIS.

II. Further Information

Publicly available documents related to this notice can be accessed using the following methods:

NRC's Public Document Room (PDR): The public may examine and have copied, for a fee, publicly available documents at the NRC's PDR, Public File Area O1 F21, One White Flint North, 11555 Rockville Pike, Rockville, Maryland.

NRC's Agencywide Documents Access and Management System (ADAMS): Publicly available documents created or received at the NRC are available electronically at the NRC's Electronic Reading Room at *http://www.nrc.gov/reading-rm/adams.html*. From this page, the public can gain entry into ADAMS, which provides text and image files of NRC's public documents. If you do not have access to ADAMS or if there are problems in accessing the documents located in ADAMS, contact the NRC's PDR reference staff at 1–800–397–4209, 301–415–4737, or by e-mail to *Pdr.Resource@nrc.gov*. The "Environmental Impact Statement for the Nichols Ranch ISR Project in Campbell and Johnson Counties, Wyoming—Supplement to the Generic Environmental Impact Statement for *In-Situ* Leach Uranium Milling Facilities" is available electronically under ADAMS Accession Number ML093340536.

The Draft SEIS for the Nichols Ranch ISR Project also may be accessed on the internet at *http://www.nrc.gov/reading-rm/doc-collections/nuregs/staff/* by selecting "NUREG–1910." The Draft SEIS will be Supplement 2 to NUREG–1910. To facilitate review, links to NEPA documents developed by other Federal agencies that were referenced in the Draft SEIS will be provided at the aforementioned internet address. Additionally, a copy of the Draft SEIS will be available at the following public libraries:

Campbell County Public Library, 2101 South 4J Road, Gillette, Wyoming 82718, 307–687–0009.

Johnson County Library, 171 North Adams Avenue, Buffalo, Wyoming 82834, 307–684–5546.

Dated at Rockville, Maryland, this 1st day of February, 2010.

For the Nuclear Regulatory Commission.

Patrice M. Bubar,

Deputy Director, Environmental Protection and Performance Assessment Directorate, Division of Waste Management and Environmental Protection, Office of Federal and State Materials and Environmental Management Programs.

[FR Doc. 2010–2529 Filed 2–4–10; 8:45 am]

BILLING CODE 7590–01–P

NUCLEAR REGULATORY COMMISSION

[Docket No. 40–1162; NRC–2010–0038]

Notice of Availability of Environmental Assessment and Finding of No Significant Impact for License Amendment for Revised Groundwater Protection Standards, Western Nuclear, Inc., Jeffrey City, WY

AGENCY: Nuclear Regulatory Commission.

ACTION: Notice of availability.

FOR FURTHER INFORMATION CONTACT: Richard Chang, Project Manager, Special Projects Branch, Division of Waste Management and Environmental Protection, Office of Federal and State Materials and Environmental Management Programs, U.S. Nuclear Regulatory Commission, Washington, DC 20555–0001. Telephone: (301) 415–7188; fax number: (301) 415–5369; e-mail: *richard.chang@nrc.gov*.

SUPPLEMENTARY INFORMATION:

I. Introduction

The U.S. Nuclear Regulatory Commission (NRC) is considering issuing a license amendment to Materials License No. SUA–56, held by Western Nuclear, Inc. (WNI), to authorize revised groundwater protection standards for its facility near Jeffrey City, Wyoming. On June 19, 1981, WNI announced that the facility would be placed on standby because of a diminishing demand for the ore and because of depressed uranium prices. The facility remained on standby until 1986 when the NRC staff amended the license to terminate the use of the tailings impoundments for disposal, and WNI was required to submit a tailings reclamation plan. On December 1, 2008, as supplemented by a February 7, 2009, submittal, WNI submitted a license amendment request for revised groundwater protection standards. On

March 9, 2009, WNI submitted an additional amendment request for groundwater protection standards for other constituents. NRC staff sent a request for additional information on April 1, 2009, which WNI responded to on June 16, 2009. NRC has prepared an Environmental Assessment (EA) in support of this amendment request in accordance with the requirements of 10 CFR part 51. Based on the EA, the NRC has concluded that a Finding of No Significant Impact is appropriate. The amendment will be issued following the publication of this Notice.

II. EA Summary

The purpose of the proposed amendment is to authorize revised groundwater protection standards for the site. Specifically, WNI has requested that an alternate concentration limit (ACL) be set for selenium at the point of compliance wells equal to 0.05 mg/L. This requested selenium value is equal to the U.S. Environmental Protection Agency's (EPA's) maximum contaminant level (MCL) for selenium in drinking water. WNI has also requested that natural uranium trigger levels for licensee action at the point of exposure be set at background levels, specifically 0.087 mg/L for the Split Rock aquifer and 0.044 mg/L for the flood-plain aquifer. The request excludes one well (Well SWAB–32), where the existing standard will not change.

The NRC staff has prepared the EA in support of the proposed license amendment. The NRC staff considered impacts to groundwater, surface water, endangered and threatened species, historic and cultural resources, socioeconomic conditions, and transportation. This EA references previously approved ACLs, which were granted in 2006. The site currently has institutional controls in place limiting the domestic use of groundwater within the proposed long-term surveillance boundary. Because WNI is requesting a standard for selenium values at the points of compliance equal to EPA's MCL and the trigger levels for licensee action at the point of exposure for natural uranium at background levels, the staff does not expect the proposed action to significantly impact the following resource areas: groundwater, surface water, endangered and threatened species, historic and cultural resources, socioeconomic conditions, and transportation.

III. Finding of No Significant Impact

On the basis of the EA, NRC has concluded that there are no significant environmental impacts from the proposed amendment and has determined that there is no need to prepare an environmental impact statement.

IV. Further Information

Documents related to this action, including the application for amendment and supporting documentation, are available electronically at the NRC's Electronic Reading Room at *http://www.nrc.gov/reading-rm/adams.html*. From this site, you can access the NRC's Agencywide Documents Access and Management System (ADAMS), which provides text and image files of NRC's public documents. The ADAMS accession numbers for the documents related to this notice are:

Document title	Date	Accession No.
Split Rock Uranium Mill Tailings Facility Proposed Amendments to LC 74	December 1, 2008	ML083380453
License Amendment Request for Western Nuclear, Inc., Source Materials License SUA–56	February 7, 2009	ML090430285
License Amendment Request for Western Nuclear, Inc., Source Materials License SUA–56	March 9, 2009	ML090750922
Request For Additional Information—Amendments To License Condition 74, Materials License SUA–56, Western Nuclear Inc., Split Rock Site, Jeffrey City, Wyoming.	April 1, 2009	ML090820330
Request for Additional Information—Amendments to L.C. 74, Materials License SUA056, Western Nuclear Inc., Split Rock Site.	June 16, 2009	ML091680563
Final Environmental Assessment	January 28, 2010	ML092780271

If you do not have access to ADAMS or if there are problems in accessing the documents located in ADAMS, contact the NRC's Public Document Room (PDR) Reference staff at 1–800–397–4209, 301–415–4737, or by e-mail to *pdr.resource@nrc.gov*.

These documents may also be viewed electronically on the public computers located at the NRC's PDR, O1 F21, One White Flint North, 11555 Rockville Pike, Rockville, MD 20852. The PDR reproduction contractor will copy documents for a fee.

Dated at Rockville, Maryland, this 28th day of January, 2010.

For the Nuclear Regulatory Commission.

Keith I. McConnell,

Deputy Director, Decommissioning and Uranium Recovery Licensing Directorate, Division of Waste Management and Environmental Protection, Office of Federal and State Materials and Environmental Management Programs.

[FR Doc. 2010–2548 Filed 2–4–10; 8:45 am]

BILLING CODE 7590–01–P

NUCLEAR REGULATORY COMMISSION

[NRC–2008–0391]

Extension of Public Comment Period on the Draft Environmental Impact Statement for the Lost Creek In-Situ Recovery Project in Sweetwater County, WY; Supplement to the Generic Environmental Impact Statement for In-Situ Leach Uranium Milling Facilities

AGENCY: Nuclear Regulatory Commission (NRC).

ACTION: Extension of Public Comment Period.

SUMMARY: This notice revises a notice published on Friday, December 11, 2009, in the **Federal Register** (74 FR 65804), which announced, in part, that the public comment period for the NRC's Draft Environmental Impact Statement (Draft SEIS) for the Lost Creek

In-Situ Recovery (ISR) Project closes on February 1, 2010. The purpose of this notice is to extend the public comment period on the Draft SEIS for the Lost Creek ISR Project to March 3, 2010.

DATES: Members of the public have been submitting written comments on the Draft SEIS for the Lost Creek ISR Project since the initial notice of availability was published on December 11, 2009 (74 FR 65804). In response to multiple requests received in writing, the comment period on the Draft SEIS is being extended to March 3, 2010. The NRC will consider comments received or postmarked after that date to the extent practical. Written comments should be submitted as described in the **ADDRESSES** section of this notice.

ADDRESSES: You may submit comments by any one of the following methods. Please include Docket ID NRC–2008–0391 in the subject line of your comments. Comments submitted in writing or in electronic form will be posted on the NRC Web site and on the Federal rulemaking Web site *http://www.regulations.gov.* Because your comments will not be edited to remove any identifying or contact information, the NRC cautions you against including any information in your submission that you do not want to be publicly disclosed.

The NRC requests that any party soliciting or aggregating comments received from other persons for submission to the NRC inform those persons that the NRC will not edit their comments to remove any identifying or contact information, and therefore, they should not include any information in their comments that they do not want publicly disclosed.

Federal Rulemaking Web site: Go to *http://www.regulations.gov* and search for documents filed under Docket ID NRC–2008–0391. Comments may be submitted electronically through this Web site. Address questions about NRC dockets to Carol Gallagher at 301–492–3668, or e-mail at *Carol.Gallagher@nrc.gov.*

Mail comments to: Michael T. Lesar, Chief, Rulemaking and Directives Branch (RDB), Division of Administrative Services, Office of Administration, Mail Stop: TWB–05–B01M, U.S. Nuclear Regulatory Commission, Washington, DC 20555–0001, or by fax to RDB at (301) 492–3446. You may also send comments electronically to *LostCreekISRSEIS@nrc.gov.*

FOR FURTHER INFORMATION CONTACT: For general information on the NRC's NEPA process, or the environmental review process related to the Draft SEIS, please contact Alan B. Bjornsen, Project Manager, Environmental Review Branch, Division of Waste Management and Environmental Protection (DWMEP), Mail Stop T–8F5, U.S. Nuclear Regulatory Commission, Washington, DC 20555–0001, by phone at 1 (800) 368–5642, extension 1195. For general or technical information associated with the safety and licensing of uranium milling facilities, please contact Stephen Cohen, Team Lead, Uranium Recovery Branch, DWMEP, Mail Stop T–8F5, U.S. Nuclear Regulatory Commission, Washington, DC 20555–0001, by phone at 1 (800) 368–5642, extension 7182.

SUPPLEMENTARY INFORMATION:

I. Introduction

As stated previously, in response to several requests during the public comment period, the NRC is extending the Draft SEIS comment period close date from February 1, 2010, to March 3, 2010. The comment period extension is in response to public comments indicating (1) the original comment period for the Draft SEIS included multiple Federal holidays, and (2) the Draft SEIS for the Lost Creek ISR Project was published concurrently with two additional NRC Draft SEISs (the Nichols Ranch ISR Project in Campbell and Johnson Counties, Wyoming, and the Moore Ranch ISR Project in Campbell County, Wyoming).

Following the end of the public comment period, the NRC staff will publish a Final SEIS for the Lost Creek ISR Project that addresses, as appropriate, the public comments on the Draft SEIS.

II. Further Information

Publicly available documents related to this notice can be accessed using the following methods:

NRC's Public Document Room (PDR): The public may examine and have copied, for a fee, publicly available documents at the NRC's PDR, Public File Area O1 F21, One White Flint North, 11555 Rockville Pike, Rockville, Maryland.

NRC's Agencywide Documents Access and Management System (ADAMS): Publicly available documents created or received at the NRC are available electronically at the NRC's Electronic Reading Room at *http://www.nrc.gov/reading-rm/adams.html.* From this page, the public can gain entry into ADAMS, which provides text and image files of NRC's public documents. If you do not have access to ADAMS or if there are problems in accessing the documents located in ADAMS, contact the NRC's PDR reference staff at 1–800–397–4209, 301–415–4737, or by e-mail to *Pdr.Resource@nrc.gov.* The "Environmental Impact Statement for the Lost Creek ISR Project in Sweetwater County, Wyoming—Supplement to the Generic Environmental Impact Statement for *In-Situ* Leach Uranium Milling Facilities" is available electronically under ADAMS Accession Number ML093350051.

The Draft SEIS for the Lost Creek ISR Project also may be accessed on the Internet at *http://www.nrc.gov/reading-rm/doc-collections/nuregs/staff/* by selecting "NUREG–1910." The Draft SEIS will be Supplement 3 to NUREG–1910. To facilitate review, links to NEPA documents developed by other federal agencies that were referenced in the Draft SEIS, will be provided at the aforementioned internet address. Additionally, a copy of the Draft SEIS will be available at the following public libraries:

Sweetwater County Library, 300 North 1st Street East, Green River, Wyoming 82935, 307–875–8615.

Rock Springs Branch Library, 400 C Street, Rock Springs, Wyoming 82901, 307–352–6667.

Dated at Rockville, Maryland, this 1st day of February, 2010.

For the Nuclear Regulatory Commission.

Patrice M. Bubar,

Deputy Director, Environmental Protection and Performance Assessment Directorate, Division of Waste Management and Environmental Protection, Office of Federal and State Materials and Environmental Management Programs.

[FR Doc. 2010–2530 Filed 2–4–10; 8:45 am]

BILLING CODE 7590–01–P

NUCLEAR REGULATORY COMMISSION

[Docket No. 70–1374–MLR; ASLBP No. 10–897–01–MLR–BD01]

Idaho State University; Establishment of Atomic Safety and Licensing Board

Pursuant to delegation by the Commission dated December 29, 1972, published in the **Federal Register**, 37 FR 28,710 (1972), and the Commission's regulations, *see* 10 CFR 2.104, 2.105, 2.300, 2.313, 2.318, and 2.321, notice is hereby given that an Atomic Safety and Licensing Board (Board) is being established to preside over the following proceeding:

Idaho State University

This proceeding concerns a Petition to Intervene submitted by Dr. Kevan Crawford in response to a **Federal**

Register Notice published on November 13, 2009 (74 FR 58,656), which provided an opportunity for hearing with respect to a revised application from Idaho State University requesting renewal of its Special Nuclear Materials License.

The Board is comprised of the following administrative judges:

Alan S. Rosenthal, Chair, Atomic Safety and Licensing Board Panel, U.S. Nuclear Regulatory Commission, Washington, DC 20555–0001;

Nicholas G. Trikouros, Atomic Safety and Licensing Board Panel, U.S. Nuclear Regulatory Commission, Washington, DC 20555–0001;

Jeffrey D.E. Jeffries, Atomic Safety and Licensing Board Panel, U.S. Nuclear Regulatory Commission, Washington, DC 20555–0001.

All correspondence, documents, and other materials shall be filed in accordance with the NRC E-filing rule, which the NRC promulgated in August 2007 (72 FR 49139).

Issued at Rockville, Maryland, this 1st day of February 2010.

E. Roy Hawkens,

Chief Administrative Judge, Atomic Safety and Licensing Board Panel.

[FR Doc. 2010–2553 Filed 2–4–10; 8:45 am]

BILLING CODE 7590–01–P

NUCLEAR REGULATORY COMMISSION

[NRC–2010–0039]

Notice of Public Meeting on the International Atomic Energy Agency Basic Safety Standards Version 3.0, Draft Safety Requirements DS379

AGENCY: Nuclear Regulatory Commission.

ACTION: Notice of Public Meeting on the International Atomic Energy Agency Basic Safety Standards Version 3.0, Draft Safety Requirements, DS379.

SUMMARY: The Interagency Steering Committee on Radiation Standards (ISCORS) is hosting an open forum with the public and other stakeholders on a revision to the International Basic Safety Standards for Protection Against Ionizing Radiation and the Safety of Radiation Sources (BSS). The forum is expected to yield information useful to inform the development of U.S. Government comments on this International Atomic Energy Agency (IAEA) draft General Safety Requirement. The forum will be held on February 26, 2010 in Rockville, MD. The proposed changes are contained in a draft document (DS379) submitted for Member State review by the IAEA.

DATES: The public meeting will be held in Rockville, Maryland on February 26, 2010, from 9:30 a.m. to 4:30 p.m. at: The Nuclear Regulatory Commission, Two White Flint Auditorium, 11555 Rockville Pike, Rockville, MD 20852, (301) 415–7000. Those members of the public unable to travel to the meeting location but still wishing to attend the public meeting may attend by phone. The bridge line to call is (877) 917–4910 and the pass code is 6463211.

The final agenda for the public meeting will be noticed no fewer than ten (10) days prior to the meeting on NRC's electronic public meeting schedule at *http://www.nrc.gov/public-involve/public-meetings/index.cfm.* Attendees should allow sufficient time for building access and security requirements.

Questions about participation in the public meeting should be directed to the facilitator listed in the **ADDRESSES** Section. Members of the public planning to attend the public meeting, whether in person or by phone are invited to RSVP at least ten (10) days prior to the meeting and should be directed to the points of contact listed in the **FOR FURTHER INFORMATION CONTACT** Section. Please specify in your RSVP whether you will be attending the meeting in person or by phone.

ADDRESSES: Questions regarding the participation in the public meeting should be submitted to the facilitator, Francis Cameron, by mail to Mail Stop O16–E15, U.S. Nuclear Regulatory Commission, Washington, DC 20555–0001, by telephone at (301) 415–1006, or by e-mail at *francis.cameron@nrc.gov.*

FOR FURTHER INFORMATION CONTACT: Ms. Monica Orendi, telephone (301) 415–3938, e-mail, *Monica.Orendi@nrc.gov,* or Dr. Donald Cool, telephone (301) 415–6347, e-mail, *Donald.Cool@nrc.gov* of the Office of Federal and State Materials and Environmental Management Programs, U.S. Nuclear Regulatory Commission, Washington, DC 20555–0001.

SUPPLEMENTARY INFORMATION:

Background

The IAEA periodically revised its Basic Safety Standards to reflect new information and accumulated experience. The current version was published in 1996 (*http://www-pub.iaea.org/MTCD/publications/PDF/ss-115-web/Pub996_web-1a.pdf*). The revision now underway is based on the recommendations of the International Commission on Radiological Protection (ICRP) contained in ICRP Publication 103, published in late 2007.

On January 28, 2010, the IAEA posted a draft revision of the BSS for comment by each of the member states of the IAEA. The draft (DS379) is available for viewing and downloading on the Internet at: *http://www-ns.iaea.org/standards/documents/draft-ms-posted.asp.* Several other International Organizations, including the World Health Organization and the International Labor Organization, are also providing the draft to their Member States for comment. The United States is a Member State of each of these International Organizations, and the U.S. Government will be developing coordinated comments on the draft revision.

The BSS provides requirements for the wide range of radiation protection situations which may exist. The draft report organizes these requirements into three principle exposure situations, namely: Planned exposure situations, in which an activity that may cause radiation exposure can be planned in advance, and appropriate controls put into place; emergency exposure situations, that arises as a result of an accident, a malicious act, or any other unexpected event, and requires prompt action in order to avoid or reduce adverse consequences; and existing exposure situations, in which the circumstances causing exposure already exist when a decision on the need for control has to be taken (such as radon in homes). The requirements in the existing BSS, and those contained in the draft cover areas which may be under the jurisdiction of the NRC, or may be part of programs under other Federal Agencies, including the Environmental Protection Agency, the Department of Health and Human Services, the Department of Labor, and the Department of Energy, or may be under the jurisdiction of various State Agencies.

Many Member States of the IAEA will utilize the BSS as one basis for the regulations for radiation safety in their countries. Adherence to the provisions of the BSS is mandated for IAEA's own conduct, and any uses of radiation or radioactive material where the IAEA is providing technical assistance and support to the Member State. Users of radiation and radioactive materials from the United States who may do business in these countries may therefore be particularly interested in this draft version. The United States does not directly adopt IAEA standards, but may consider such standards as a useful point of reference in the development of proposals under the Administrative

Procedure Act for changes to regulations or guidance in the United States. There are many areas in which the existing BSS and the draft BSS available for comment are known to differ from the current provisions in the regulations of various Federal and State agencies in the United States. Thus, views expressed on the IAEA draft BSS are not considered as comments on any current or possible future regulation activity, but are useful to assist the international community in developing a logical, scientifically based set of requirements. Furthermore, the IAEA BSS can serve as one possible point of reference in the ongoing consideration by various U.S. Agencies of possible regulatory options which may or may not result in a greater degree of alignment with international radiation protection recommendations, such as those in ICRP Publication 103.

ISCORS is a Committee of Federal Agencies intended to foster early resolution and coordination of regulatory issues associated with radiation standards and guidelines. Federal Agencies who are members of ISCORS include the U.S. Environmental Protection Agency, the U.S. Nuclear Regulatory Commission, the U.S. Department of Energy, the U.S. Department of Defense, the U.S. Department of Homeland Security, the U.S. Department of Transportation, the Occupational Safety and Health Administration of the U.S. Department of Labor, and the U.S. Department of Health and Human Services. The Office of Science and Technology Policy, and the Office of Management and Budget are observers to the Committee because of their science policy and regulatory policy responsibilities. Representatives from selected state radiation control organizations and the Defense Nuclear Facilities Safety Board are also observers to the Committee because of their expertise in regulatory implementation and oversight.

Attendees at the meeting are invited to express their views on the draft safety requirement DS379. The views expressed during the meeting will be considered for incorporation, along with comments developed within the Agencies, and will help determine the U.S. Government comments on the draft BSS to be submitted to the IAEA. ISCORS recognizes that a variety of views may be provided, and that viewpoints may differ. ISCORS does not intend to provide specific feedback to those attending the public meeting, and attendees should have no expectation that the views expressed during the meeting will be included in the U.S. Government comments submitted to IAEA. However, ISCORS, and its members agencies, believe that is important to provide an opportunity for the public to express their views on the BSS through this forum. Comments submitted by Member States, including the United States, will be available on the IAEA web site. Note that future domestic rulemakings, if appropriate, will continue to follow established rulemaking procedures, including the opportunity to formally comment on proposed rules.

Dated at Rockville, Maryland, this 28th day of January, 2010.

For the Nuclear Regulatory Commission.

Robert J. Lewis,

Director, Division of Material Safety and State Agreements, Office of Federal and State Materials, and Environmental Management Programs.

[FR Doc. 2010–2547 Filed 2–4–10; 8:45 am]

BILLING CODE 7590–01–P

NUCLEAR REGULATORY COMMISSION

[Docket Nos. 50–277 and 50–278; NRC–2010–0042]

Exelon Generation Company, LLC; PSEG Nuclear, LLC; Peach Bottom Atomic Power Station Units 2 and 3; Notice of Withdrawal of Application for Amendment to Facility Operating License

The U.S. Nuclear Regulatory Commission (the Commission) has granted the request of Exelon Generation Company, LLC, (Exelon) and PSEG Nuclear, LLC, to withdraw the portion of its August 7, 2008, application related to incorporation of Technical Specification Task Force Traveler 363, Revision 0, for proposed amendment to Facility Operating License Nos. DPR–44 and DPR–56 for the Peach Bottom Atomic Power Station (PBAPS), Units 2 and 3, located in York and Lancaster Counties, Pennsylvania.

The proposed amendment would have revised the Technical Specifications to incorporate TSTF–363–A, "Revise Topical Report References in ITS [improved technical specifications] 5.6.5, COLR [Core Operating Limits Report]," Revision 0. The amendment would have modified the PBAPS Units 2 and 3 TS 5.6.5, "Core Operating Limits Report (COLR)," to remove the requirement to maintain COLR Topical Report references by number, title, date, and NRC staff approved document, if included. Incorporation of the TSTF would have permitted referencing of the topical report by number and title only in the TSs, with the additional details being controlled within the COLR document.

The Commission had previously issued a Notice of Consideration of Issuance of Amendment published in the **Federal Register** on May 5, 2009 (74 FR 20744). However, by letter dated January 19, 2010, the licensee withdrew the proposed change.

For further details with respect to this action, see the application for amendment dated August 7, 2008, and the licensee's letter dated January 19, 2010, which withdrew the application for license amendment. Documents may be examined, and/or copied for a fee, at the NRC's Public Document Room (PDR), located at One White Flint North, Public File Area O1 F21, 11555 Rockville Pike (first floor), Rockville, Maryland. Publicly available records will be accessible electronically from the Agencywide Documents Access and Management System (ADAMS) Public Electronic Reading Room on the internet at the NRC Web site, *http://www.nrc.gov/reading-rm/adams.html.* Persons who do not have access to ADAMS or who encounter problems in accessing the documents located in ADAMS should contact the NRC PDR Reference staff by telephone at 1–800–397–4209, or 301–415–4737 or by e-mail to *pdr.resource@nrc.gov.*

Dated at Rockville, Maryland, this 29th day of January 2010.

For the Nuclear Regulatory Commission.

John D. Hughey,

Project Manager, Plant Licensing Branch LPL1–2, Division of Operating Reactor Licensing, Office of Nuclear Reactor Regulation.

[FR Doc. 2010–2532 Filed 2–4–10; 8:45 am]

BILLING CODE 7590–01–P

SECURITIES AND EXCHANGE COMMISSION

[Release Nos. 33–9104; 34–61462; File No. 265–25–03]

Investor Advisory Committee

AGENCY: Securities and Exchange Commission.

ACTION: Notice of meeting of SEC Investor Advisory Committee.

SUMMARY: The Securities and Exchange Commission Investor Advisory Committee is providing notice that it will hold a public meeting on Monday, February 22, 2010, in the Multipurpose Room, L–006, at the Commission's main offices, 100 F Street, NE., Washington, DC. The meeting will begin at 9 a.m. (EST) and will be open to the public. The Committee meeting will be webcast on the Commission's Web site at

http://www.sec.gov. Persons needing special accommodations to take part because of a disability should notify a contact person listed below. The public is invited to submit written statements to the Committee.

The agenda for the meeting includes: (i) Consideration of a Committee recusal policy; (ii) report from the Education Subcommittee, including a presentation on the National Financial Capability Survey; (iii) report from the Investor as Purchaser Subcommittee, including a discussion of fiduciary duty and mandatory arbitration; (iv) report from the Investor as Owner Subcommittee, including recommendations for the Committee on Regulation FD and proxy voting transparency, as well as reports on a work plan for environmental, social, and governance disclosure and on financial reform legislation; and (v) discussion of next steps and closing comments.

DATES: Written statements should be received on or before February 16, 2010.

ADDRESSES: Written statements may be submitted by any of the following methods:

Electronic Comments

- Use the Commission's Internet submission form (*http://www.sec.gov/rules/other.shtml*); or
- Send an e-mail message to *rule-comments@sec.gov.* Please include File Number 265–25–03 on the subject line.

Paper Comments

- Send paper statements in triplicate to Elizabeth M. Murphy, Federal Advisory Committee Management Officer, Securities and Exchange Commission, 100 F Street, NE., Washington, DC 20549–1090.

All submissions should refer to File No. 265–25–03. This file number should be included on the subject line if e-mail is used. To help us process and review your statements more efficiently, please use only one method. The Commission will post all statements on the Advisory Committee's Web site (*http://www.sec.gov/spotlight/investoradvisorycommittee.shtml*). Statements are available for Web site viewing and printing in the Commission's Public Reference Room, 100 F Street, NE., Washington, DC 20549, on official business days between the hours of 10 a.m. and 3 p.m. All statements received will be posted without change; we do not edit personal identifying information from submissions. You should submit only information that you wish to make available publicly.

FOR FURTHER INFORMATION CONTACT: Kayla J. Gillan, Deputy Chief of Staff, Office of the Chairman, at (202) 551–2100, or Owen Donley, Chief Counsel, Office of Investor Education and Advocacy, at (202) 551–6322, Securities and Exchange Commission, 100 F Street, NE., Washington, DC 20549–6561.

SUPPLEMENTARY INFORMATION: In accordance with Section 10(a) of the Federal Advisory Committee Act, 5 U.S.C. App. 1, section 10(a), Kayla J. Gillan, Designated Federal Officer of the Committee, has approved publication of this notice.

Dated: February 2, 2010.

Elizabeth M. Murphy,

Committee Management Officer.

[FR Doc. 2010–2519 Filed 2–4–10; 8:45 am]

BILLING CODE P

SECURITIES AND EXCHANGE COMMISSION

[Release No. 34–61446; File No. SR–NASDAQ–2009–077]

Self-Regulatory Organizations; The NASDAQ Stock Market LLC; Order Approving Proposed Rule Change To Modify the Procedures Followed When a Listed Company Falls Below Certain Listing Requirements

January 29, 2010.

I. Introduction

On August 17, 2009, The NASDAQ Stock Market LLC ("Nasdaq" or "Exchange") filed with the Securities and Exchange Commission ("Commission"), pursuant to Section 19(b)(1) of the Securities Exchange Act of 1934 ("Act") [1] and Rule 19b–4 thereunder,[2] a proposed rule change to modify the length of certain compliance periods in Nasdaq's continued listing requirements and to modify the time available for a company to provide a plan to regain compliance with certain listing requirements.[3] The proposed rule change was published for comment in the **Federal Register** on September 8, 2009.[4] The Commission received three comment letters on the proposal.[5] On December 28, 2009 the Exchange filed a response to the comment letter.[6] This order approves the proposed rule change.

II. Description of the Proposal

Price Related Criteria

Under Nasdaq's current continued listing requirements relating to market value of listed securities, a company is considered to be non-compliant after falling below the standard for 10 consecutive trading days.[7] Thereafter, the company is provided 90 calendar days to regain compliance with the market value of listed securities requirement. Further, Nasdaq's current continued listing rules relating to market value of publicly held shares provide that a company is deficient if it is below the standard for 30 consecutive trading days. Upon such failure, the company is provided with 90 calendar days to regain compliance.[8]

Nasdaq proposes to modify the length of time required to trigger non-compliance with the market value of listed securities requirement and to modify the compliance periods associated with the Exchange's market value of listed securities and market value of publicly held shares continued listing requirements. Nasdaq notes that, under its bid price continued listing standard, if a company's security has a closing bid price below $1.00 for 30 consecutive trading days, it no longer meets the bid price requirement and is automatically provided 180 calendar days to regain compliance.[9] Nasdaq asserts that because compliance with each of these rules is directly related to the price of an issuer's security, the length of time to trigger non-compliance, and the amount of time afforded as a compliance period, should be consistent. As such, Nasdaq proposes to lengthen the period that a company would need to be below the market

---

[1] 15 U.S.C. 78s(b)(1).

[2] 17 CFR 240.19b–4.

[3] Nasdaq is also proposing to eliminate certain abbreviations that are used inconsistently and utilize defined terms, as appropriate, in Rules 5810 and 5840, and to remove authority in Rule 5810(c)(2)(C) that is duplicated in Rule 5810(c)(2)(B).

[4] *See* Securities Exchange Act Release No. 46267 (September 2, 2009), 74 FR 46267 ("Notice").

[5] *See* letter from Barbara Roper, Director of Investor Protection, Consumer Federation of America, to Elizabeth M. Murphy, Secretary, Commission, dated September 28, 2009 ("CFA Comment Letter"); letter from Alan F. Eisenberg, Executive Vice President, Biotechnology Industry Organization ("BIO") to Elizabeth M. Murphy, Secretary, Commission, dated September 29, 2009 ("BIO Comment Letter"); and letter from Jason S. Frankl, Senior Managing Director, FTI Consulting ("FTI"), to Elizabeth M. Murphy, Secretary, Commission, dated October 5, 2009 ("FTI Comment Letter").

[6] *See* letter from Arnold Golub, Vice President and Associate General Counsel, Nasdaq, to Elizabeth Murphy, Secretary, Commission, dated December 28, 2009 ("Nasdaq Response Letter").

[7] Nasdaq Rule 5810(b)(3)(C). NASDAQ changed the period to regain compliance with the market value of listed securities requirement from 30 to 90 days in January of last year. Securities Exchange Act Release No. 59291 (January 23, 2009), 74 FR 5197 (January 29, 2009) (SR–NASDAQ–2009–002).

[8] Nasdaq Rule 5810(b)(3)(D).

[9] Nasdaq Rule 5810(b)(3)(A).

value of listed securities requirement before being considered non-compliant from 10 to 30 consecutive trading days. Nasdaq also proposes to extend from 90 to 180 days the compliance period in which companies that are non-compliant with the market value of listed securities and market value of publicly held shares requirements can regain compliance.[10] Nasdaq notes that it believes that the existing 90-day time frames do not provide sufficient time for a company to regain compliance.

As revised, the maximum amount of time that could be afforded to a company that failed to meet the market value of listed securities or market value of publicly held shares requirements would be 18 months.[11]

Requirements With Respect to Compliance Plans

Nasdaq also proposes to modify the periods applicable in cases where a company can provide Nasdaq staff with a plan to regain compliance, such as when a company fails to meet the minimum requirements for stockholders' equity, the number of publicly held shares, or the number of shareholders.[12] Currently, companies are provided 15 calendar days to submit a plan to regain compliance. Following a review of the plan, staff can grant the company a period of up to 105 calendar days from the initial notification of non-compliance for the company to regain compliance. Nasdaq proposes to increase the number of calendar days a company has to present its plan from 15 to 45, and to permit staff to grant up to a 5-day extension of this period upon good cause shown.[13] Nasdaq asserts that 15 days is often insufficient for a company to formulate a meaningful plan, particularly in the current market and economic conditions. Further, Nasdaq proposes to increase from 105 to 180 the number of calendar days for which staff can grant an extension of time to regain compliance from its initial notification of non-compliance.[14] Nasdaq states that this additional time will better allow companies to implement a plan to regain compliance.

As revised, the maximum amount of time that could be afforded to a company that failed to meet a listing requirement that allows the submission of a plan to regain compliance would be 18 months.[15]

Implementation

Nasdaq states that any company that had not yet been notified that it was non-compliant with the market value of listed securities requirement upon Commission approval of the proposed rule change will not be notified until they are below the requirement for 30 consecutive trading days.[16] Any company that has already been notified that it was non-compliant with either the market value of listed securities requirement or the market value of publicly held shares requirement and that is still in the 90 calendar day compliance period for such failure will have their compliance period extended until 180 calendar days from the date they were originally notified of the deficiency.[17] No additional time will be provided to a company that has received a Staff Delisting Determination for failure to meet either of those requirements before the proposed rule change is approved.[18]

With respect to the proposed changes to the compliance plan process, if a company has not yet submitted its plan of compliance when the proposed rule change is approved, the deadline to submit that plan will be extended until 45 days from the date of staff's notification of the deficiency. If the company has submitted its plan of compliance when the proposed rule change is approved, but staff has not yet made a determination with respect to whether to grant additional time, staff will be permitted to grant the company up to 180 days from staff's notification of the deficiency to regain compliance. If the company has already received an extension of time to regain compliance from staff when the proposed rule change is approved,[19] at the end of that exception staff could, based on a review of the company at the time, grant additional time for the company to regain compliance, up to 180 days from staff's original notification of the deficiency.[20] No additional time will be provided to a company that has already received a Staff Delisting Determination at the time the proposed rule change is approved.[21]

III. Comment Summary

In its comment letter, CFA raises several concerns regarding the Exchange's proposal.[22] First, CFA argues that the Exchange's proposal will lead to a proliferation of lengthy automatic compliance periods for companies that fall below listing standards, potentially allowing large numbers of non-compliant companies to

[10] In its filing, Nasdaq noted that it could apply its authority described in Nasdaq Rule 5100 to delist a security during a compliance period if the market value of listed securities or market value of publicly held shares was so low that delisting is necessary to maintain the quality of and public confidence in the market, to prevent fraudulent and manipulative acts and practices, and to protect investors and the public interest.

[11] A company could only receive an extension up to this 18-month maximum length if: (i) It failed to comply during the automatic 180-day compliance period; (ii) the company appealed to a Hearings Panel; and (iii) the Nasdaq Listing and Hearing Review Council ("Listing Council") determined to call the matter for review, stay the company's delisting, and, after reviewing the company's compliance plan, provide the company with the maximum 360-day period from the date of the Staff Delisting Determination to regain compliance.

[12] Nasdaq Rule 5810(c)(2) and IM–5810–2 provide the procedures governing deficiencies for which a company may submit a plan of compliance to Nasdaq staff. Nasdaq has posted frequently asked questions at *http://www.nasdaq.com/about/faqs-listing-information-questions.stm#continued,* which discuss the information a company should consider in preparing its plan of compliance.

[13] Nasdaq anticipates that this authority would be used to address cases where the company could not timely submit its plan due to events outside the control of the company, such as when severe weather interferes with the company's ability to provide the necessary information before the deadline.

[14] Nasdaq states that staff will determine whether to allow the company additional time, and if so how much time to allow, based on a review of the company's plan of compliance.

[15] A company could only receive an extension up to this 18-month maximum length if: (i) After reviewing the company's compliance plan, Nasdaq staff granted the company the maximum 180-day period to regain compliance; (ii) the company failed to comply within the time allowed by staff and appealed to a Hearings Panel; and (iii) the Nasdaq Listing Council determined to call the matter for review, stay the company's delisting, and, after reviewing the company's compliance plan, provide the company with the maximum 360-day period from the date of the Staff Delisting Determination to regain compliance.

[16] For example, if a security is below the market value of listed securities requirement for 7 consecutive trading days when the proposed rule is approved, the company would not be notified that it is deficient unless and until the security remains below the requirement for another 23 consecutive trading days, such that it remained below for a total of 30 consecutive trading days.

[17] For example, if a company had been notified that its security was below either the market value of listed securities or market value of publicly held shares requirement 30 days before the proposed rule is approved, such that it had 60 days remaining in its compliance period, that compliance period would be extended by 90 days so that the company would have 150 days remaining in the compliance period.

[18] For example, if a company had been notified that its security was below either the market value of listed securities or market value of publicly held shares requirement 95 days before the proposed rule is approved, the company would not receive any additional time as a result of the proposed rule change. Such companies would continue through the Hearings and Appeals process, however, and could receive additional time as provided for in Nasdaq Rules 5815(c)(1)(A) and 5820(d)(1).

[19] Nasdaq Rule 5810(c)(2)(B)(i).

[20] The proposal to allow a company additional time at the end of its extension based on staff's further review of the company is consistent with Nasdaq's current practice of potentially allowing a company additional time if it was not initially granted the full 105 days allowed by current Nasdaq Rule 5810(c)(2)(B)(i).

[21] Such companies would continue through the Hearings and Appeals process, however, and could receive additional time as provided for in Nasdaq Rules 5815(c)(1)(A) and 5820(d)(1).

[22] *See* CFA Comment Letter, *supra* note 5.

remain listed for extended periods of time with little or no oversight.[23] In response, the Exchange states that it continuously monitors each listed company for compliance with the listing rules and determines whether any public interest concerns exist that may make continued listing inappropriate.[24] In particular, the Exchange notes that notwithstanding the automatic compliance periods, Nasdaq staff has the authority to apply additional and more stringent criteria to shorten a compliance period or delist a company before the end of the compliance period if it believes that the continued listing of a company would be contrary to the public interest.[25]

In addition, CFA notes that while Nasdaq has stated that the proposed rule change is intended to harmonize and ensure consistency in the compliance periods across its continued listing rules, Nasdaq has chosen to apply its least restrictive compliance period (*i.e.,* its longest compliance period of 180 days).[26] The CFA asserts that if harmonization is needed, Nasdaq should instead "harmonize up, not down" and apply its shorter compliance periods consistently across its rules.[27] In the Nasdaq Response Letter, the Exchange asserts that its experience has shown that many of the current compliance periods are too short, particularly given the extraordinary volatility in the securities markets over the past decade.[28] Specifically, the Exchange notes that in its experience, and as also noted in the BIO Comment Letter, the existing time periods do not sufficiently account for daily market fluctuations, and given the changes that have taken place in the financial markets, the existing time periods are unreasonably short.[29] Further, the Exchange notes that the proposed longer compliance periods are in line with the compliance periods afforded by other exchanges.[30] For example, Nasdaq states that the NYSE Amex rules provide that staff can grant a company up to 18 months to regain compliance with its market value of publicly held shares requirement, and the NYSE rules allow staff to provide a company with up to 18 months to regain compliance with its market capitalization requirement.[31]

CFA also argues that the proposal to allow an automatic 180-day grace period for the market value of publicly held shares and market value of listed securities requirements raises particular concerns.[32] Specifically, CFA states that the market value standard is an alternative to the stockholders' equity requirement, and thus companies listing under this standard are companies that fail to meet the minimum stockholders' equity requirement.[33] Further, CFA notes that Nasdaq recently extended the period to regain compliance with the market value of listed securities requirement from 30 to 90 days, and that this proposed rule change would now allow a company a total of 210 days of non-compliance before a hearing.[34] CFA also questions why the 180-day automatic grace period is preferable to a case-by-case review.[35]

The Exchange responds that these revised time periods are consistent with the Exchange's current bid price rule.[36] Specifically, like the bid price rule, a company would be found to be non-compliant only after it falls below the current threshold for 30 days and would thereafter be afforded 180 days to regain compliance.[37] Nasdaq also notes that the maximum total time period that a company that failed to meet the market value of listed securities or market value of publicly held shares requirements could remain listed would be 18 months, which is consistent with the compliance periods available at other markets.[38] With regard to CFA's suggestion that Nasdaq should consider a case-by-case review of companies below the requirements rather than granting an automatic 180-day compliance period, Nasdaq states that for price-related listing requirements, automatic periods provide a transparent, objective process, which is more appropriate than subjective reviews.[39] Further, it notes that such a process provides clear guidance to companies and their investors.[40]

CFA also asserts that Nasdaq should be required to provide a variety of additional information to support its proposal.[41] For example, CFA suggests that Nasdaq should provide further data regarding its discretionary authority to delist a security during a compliance period;[42] supplementary information regarding compliance plans and compliance periods granted by staff; and statistics on the 180-day plan process that was adopted last fall for companies that are late in filing their periodic reports.[43] The FTI Comment Letter expressed support for this portion of CTA's comment letter asserting that Nasdaq should be required to provide additional information and rationale in support of its proposal.[44] In response, the Exchange states that the request for additional information is not appropriate or necessary for consideration of the proposed rule change. Rather, Nasdaq asserts that the proposed rule change satisfies the relevant statutory standards, and data concerning Nasdaq's historic enforcement of listing standards is already disclosed in Nasdaq OMX's public filings with the Commission and is not necessary for consideration of this proposal.[45]

Finally, the CFA Comment Letter suggests that the Commission should review the economic impact of the proposed rule change on the exchange and should require greater independence in Nasdaq's delisting process if such rule changes are found to benefit Nasdaq's financial position.[46]

---

[23] *Id.*

[24] The Exchange notes that such monitoring includes staff review of virtually every SEC filing made by listing companies, including proxies and annual and quarterly financial reports. *See* Nasdaq Response Letter, *supra* note 6, at 3.

[25] *See* Nasdaq Response Letter, *supra* note 6, at 1–2.

[26] *See* CFA Comment Letter, *supra* note 5.

[27] *Id.*

[28] *See* Nasdaq Response Letter, *supra* note 6, at 1 and 3.

[29] *See* Nasdaq Response Letter, *supra* note 6, at 3.

[30] *See* Nasdaq Response Letter, *supra* note 6, at 3.

[31] *See* Nasdaq Response Letter, *supra* note 6, at 3.

[32] *See* CFA Comment Letter, *supra* note 5.

[33] *Id.*

[34] In arriving at this figure, CFA is including in its calculation the 30-day period required to trigger non-compliance.

[35] *See* CFA Comment Letter, *supra* note 5.

[36] *See* Nasdaq Response Letter, *supra* note 6, at 2.

[37] *See* Nasdaq Response Letter, *supra* note 6, at 2.

[38] *See* Nasdaq Response Letter, *supra* note 6, at 2 (citing Section 802.02 of the NYSE Listed Company Manual). Nasdaq notes that, as described in the notice of the proposed rule change, a company that receives a delisting letter after the 180-day compliance period may appeal the delisting decision to the Hearings Panel, which can grant up to an additional 180 day to regain compliance. Thereafter, the company could remain listed for an additional 180 days if the Nasdaq Listing Council were to call the matter for review, stay the company's delisting, and determine to grant additional time. In the Nasdaq Response Letter, the Exchange states that it would be highly unusual for the Listing Council to take such action and noted that it does not believe that the Listing Council has ever exercised its discretion to stay a delisting to allow a company additional time to regain compliance with a price-based listing requirement.

[39] *See* Nasdaq Response Letter, *supra* note 6, at 4.

[40] *Id.*

[41] *See* CFA Comment Letter, *supra* note 5.

[42] *See supra* note 10.

[43] *See* CFA Comment Letter, *supra* note 5.

[44] *See* FTI Comment letter, *supra* note 5.

[45] *See* Nasdaq Response Letter, *supra* note 6, at 5.

[46] *See* CFA Comment Letter, *supra* note 5. The CFA Comment Letter also provides an additional recommendation that is not aimed at this particular rule proposal. Specifically, CFA argues that more should be done to require exchanges to identify and alert investors of noncompliant companies. Nasdaq responded to this assertion in its Response Letter

FTI also expressed support for this portion of the CFA Comment Letter.[47] In its response, Nasdaq states that it has a transparent, independent enforcement process in place to support its listing standards.[48] Specifically, Nasdaq notes that its staff has very limited discretion to grant an extension to a company that does not comply with a listing requirement, and many rules provide for automatic compliance periods rather than compliance periods determined by Nasdaq staff.[49] The Nasdaq Response Letter also describes the independence of the delisting process with regard to price-based listing requirements.[50] In particular, Nasdaq notes that after the 180-day automatic compliance periods runs, Nasdaq staff has no discretion to allow the company to continue trading and must issue a delisting letter.[51] A company may appeal that delisting letter to a Hearings Panel, which is independent of Nasdaq and includes no Nasdaq employees.[52] Thereafter, another independent body, the Nasdaq Listing and Hearing Review Council ("Listing Council"), would be the only body with the ability to call the matter for review and determine to grant additional time to the company.[53] Nasdaq also states that its Listing Qualifications Department is housed in a regulation group that is organizationally and institutionally separate than its business lines and is directly accountable to the Regulatory Oversight Committee of the Nasdaq Board.[54]

The BIO Comment Letter generally supported the Exchange's proposal.[55] In particular, the BIO Comment Letter stated that extending the number of days from 10 to 30 to trigger non-compliance with the market value of listed securities requirement would allow biotechnology companies to regain some stability during daily market fluctuations that persist for emerging biotechnology companies.[56] The BIO Comment Letter also expressed support for the portion of the proposal providing companies 45 days to submit a plan to regain compliance, noting that this increase will provide companies the necessary time to work with their investors to secure a long-term plan that will bring them back into compliance with listing standards.[57]

IV. Discussion

After careful review, the Commission finds that the proposed rule change is consistent with the requirements of the Act and the rules and regulations thereunder applicable to a national securities exchange and, in particular, with Section 6(b)(5) of the Act,[58] which requires, among other things, that the rules of a national securities exchange be designed to prevent fraudulent and manipulative acts and practices, to promote just and equitable principles of trade, to remove impediments to, and perfect the mechanism of, a free and open market and a national market system and, in general, to protect investors and the public interest.[59]

The Commission notes that the development and enforcement of adequate standards governing the initial and continued listing of securities on an exchange is an activity of critical importance to financial markets and the investing public. The Commission continues to believe that enforcement of continued listing standards are important to ensure that only companies suitable for listing remain trading on national securities exchanges. While the Commission would be concerned about any national securities exchange's proposal that would allow companies falling below continued listing standards to remain listed for an extended period of time, the Commission has determined to approve the Nasdaq's proposal for the reasons discussed below.

The Commission believes that the Exchange's proposal to extend from 90 to 180 days the period in which companies, that are non-compliant with the market value of listed securities and market value of publicly held shares requirements, can regain compliance, will better align the compliance period for these continued listing standards with the automatic 180 day compliance period already provided in Nasdaq's rules for noncompliance with the bid price requirement, as well as the rules of other markets. As such, the Commission believes that the proposal should reduce investor confusion over the compliance periods available under Nasdaq's price-related continued listing requirements.[60] Further, the change should provide companies with additional time to take actions that may be necessary to regain compliance, such as obtaining shareholder approval and registering shares.

The CFA Comment Letter takes issue with the extension of the automatic compliance period for these continued listing standards to 180 days, expressing concern about non-compliant companies remaining listed on the Exchange for extended periods of time. However, as the Exchange has represented in the Notice and in the Nasdaq Response Letter, the maximum amount of time that could be afforded to a company that falls out of compliance with the market value of listed securities or market value of publicly held shares requirements would be 18 months.[61] The Exchange further stated in its Response Letter that it is highly unusual for the Listing Council to stay a company's delisting and grant additional time to regain compliance and that it does not believe that the Listing Council has ever exercised its discretion to take such action for a price-based delisting decision.[62] The Commission also notes that this maximum length of time of 18 months[63] is consistent with the maximum amount of time that the NYSE and NYSE Amex can provide for a listed company to regain compliance with its similar continued listing standards.[64] Further, the Exchange has represented that it has the authority under Nasdaq Rule 5100 to delist a

by noting that companies are required to make public disclosure that they are non-compliant with listing standards, and Nasdaq includes the company on the list of non-compliant companies on its Web site and displays such information to investors viewing the company's quotation. Further, Nasdaq has a display requirement for vendors that display Nasdaq's data feed, which requires them to show the company's noncompliance. Nasdaq did acknowledge that vendors that do not obtain quotation information from Nasdaq may not display this information. *See* Nasdaq Response Letter, *supra* note 6, at footnote 4.

[47] *See* FTI Comment Letter, *supra* note 5, at 1.

[48] *See* Nasdaq Response Letter, *supra* note 6, at 1.

[49] *See* Nasdaq Response Letter, *supra* note 6, at 1.

[50] *See id.* at 2.

[51] *See id.*

[52] *See id.*

[53] *See id.* Nasdaq notes, however, that it would be highly unusual for the Listing Council to take such action.

[54] *See id.*

[55] *See* BIO Comment Letter, *supra* note 5.

[56] *Id.*

[57] *Id.* In addition, the BIO Comment Letter provided requests for Nasdaq to further modify certain of its continued listing standards and compliance periods. Because those requests do not relate to the current proposed rule change before the Commission, they will not be discussed in this Order.

[58] 15 U.S.C. 78f(b)(5).

[59] In approving this proposed rule change, the Commission has considered the proposed rule's impact on efficiency, competition, and capital formation. *See* 15 U.S.C. 78c(f).

[60] Under Nasdaq's current rules, if a company's security has a closing bid price below $1 for 30 consecutive trading days, it is deemed to be non-compliant with the bid price requirement and is automatically provided 180 calendar days to regain compliance. *See* Nasdaq Rule 5810(b)(3)(A).

[61] As noted, this maximum 18 month compliance time only exists assuming every maximum compliance period is granted and an appeal was called for review by Nasdaq's Listing Council. *See supra* note 11.

[62] *See supra* note 38.

[63] *See supra* note 11.

[64] *See* Section 802.02 of the NYSE Listed Company Manual and Section 1009 of the NYSE Amex Company Guide.

security during a compliance period if the market value of listed securities or market value of publicly held shares was so low that delisting is necessary to maintain the quality of and public confidence in the market, to prevent fraudulent and manipulative acts and practices, and to protect investors and the public interest. Notwithstanding the lengthened automatic compliance periods afforded to issuers under the proposed rule change, the Commission expects Nasdaq to use its authority to delist issuers in a prompt, efficient and fair manner where necessary and appropriate in accordance with Nasdaq Rule 5100, especially in those situations where the market value of a company's stock is so low as to make continued trading unwarranted.

The Commission also believes that Nasdaq's proposal to extend the period that a company would need to be below the minimum market value of listed securities requirement before being deemed non-compliant from 10 to 30 consecutive trading days is appropriate and consistent with the Act. The Commission notes that this change will further harmonize Nasdaq's price-related continued listing requirements, as the bid price and market value of publicly held shares requirements currently provide that a company is not deficient until it falls below the respective standard for 30 consecutive trading days. Further, as noted in the Nasdaq Response Letter, this time period is consistent with, and in some cases more stringent than, the threshold time periods on other exchanges. Specifically, on NYSE Amex, a company is deemed to be non-compliant with the market value of publicly held shares requirement only after it has been below the standard for 90 consecutive days.[65] In addition, a company is considered non-compliant with the NYSE's market capitalization requirement after the company falls below the standard for 30 consecutive trading days.[66]

With regard to deficiencies for which a company can provide staff with a plan to regain compliance,[67] the Commission believes that increasing from 105 to 180 the maximum number of calendar days for which staff can grant an extension of time from its initial notification of non-compliance will provide companies with additional time that may be necessary to implement a plan to regain compliance where appropriate. The Commission notes that the maximum time period of 180 days is not an automatic grace period, but rather each company's compliance period will be determined by Nasdaq staff after review of the company's compliance plan.

Accordingly, the Commission expects Nasdaq staff to conduct a thorough case-by-case review of each company's plan of compliance, and make an individualized determination as to the extension of time that is appropriate for a particular company. In addition, even with this change, the Commission notes that the total maximum amount of time that could be afforded to a company that failed to meet a listing requirement that allows for the submission of a plan to regain compliance would be 18 months, and this maximum 18 months assumes all compliance periods are extended to the permissible maximum during the appeal process by the Hearings Panel and Listing Council.[68] As discussed above, this time period is consistent with the maximum amount of time a company is permitted to regain compliance with similar continued listing standards under NYSE's rules.[69]

The Commission believes that Nasdaq's proposal to increase from 15 to 45 days the length of time a company has to submit a plan to regain compliance should provide companies with additional time to devise a meaningful and workable plan to regain compliance. Further, the Commission notes that this revised time period is consistent with the NYSE's rules, which generally provide a company with 45 days from receipt of a letter of non-compliance to submit a plan to regain compliance.[70] We further note that the 45 days does not extend the maximum time period the staff can allow for compliance.[71]

Finally, the Commission notes that while the additional, specific information that the CFA argued should be provided by Nasdaq on issues such as the historic enforcement of Nasdaq's listing standards might be useful for many purposes, it agrees with Nasdaq that such data and information is not required in order for the Commission to find that the current proposed rule change is consistent with the Act.[72] In addition, the Commission believes that the CFA's call for greater independence in Nasdaq's delisting process is not an issue that is directly before the Commission in this proposed rule change. The rules governing and outlining the current delisting process of the Exchange have been reviewed by the Commission and approved as being consistent with the Act. As noted above, many of the changes proposed in the current rule filing involve the lengthening of automatic threshold or compliance periods that are not subject to the discretion of Nasdaq staff. While Nasdaq is lengthening from 105 to 180 the maximum number of calendar days for which staff can grant an extension of time for compliance with regard to those deficiencies for which a company can provide staff with a plan to regain compliance, the Commission does not believe that this changes the independence of the Hearings Panel and Listing Council. Although we recognize that the staff will have more discretion in setting the initial length of the compliance period for certain deficiencies, upon appeal, any delisting for non-compliance will continue to be reviewed by independent panels. In addition, as noted, the maximum length of time permitted under the proposed rule change is consistent with other markets' rules.[73]

In summary, as noted above, the Commission believes that enforcement of continued listing standards is of critical importance to our financial markets and investing public and, among other things helps to ensure that exchange traded securities have adequate depth and liquidity necessary to promote fair and orderly markets. While the Nasdaq's rule proposal does extend the time frames a company can continue to trade while out of compliance with certain continued listing standards, the changes are consistent with that of other national securities exchanges and do provide transparency to the delisting process. We also continue to expect Nasdaq, as they have represented, to monitor companies that are out of compliance and delist them promptly should there be public interest or other concerns that make continued trading unwarranted.

For the reasons noted above, the Commission believes that the proposed rule change is reasonable and consistent with the Act.

V. Conclusion

It is therefore ordered, pursuant to Section 19(b)(2) of the Act,[74] that the

[65] *See* Nasdaq Response Letter, *supra* note 6, at 3.

[66] *See* Nasdaq Response Letter, *supra* note 6, at 3.

[67] *See* Nasdaq Rule 5810(c)(2) and IM–5812.

[68] *See supra* note 15.

[69] *See supra* note 64.

[70] Section 802.02 of the NYSE Listed Company Manual.

[71] For example, if the plan is submitted 45 days after notification of non-compliance, staff could only grant an additional 135 days to regain compliance.

[72] The Commission notes that as a registered national securities exchange, the Commission has oversight over Nasdaq's enforcement of its rules, including the delisting rules and process.

[73] *See supra* note 64.

[74] 15 U.S.C. 78s(b)(2).

proposed rule change (SR–NASDAQ–2009–077) be, and hereby is, approved.

For the Commission, by the Division of Trading and Markets, pursuant to delegated authority.[75]

Florence E. Harmon,

Deputy Secretary.

[FR Doc. 2010–2500 Filed 2–4–10; 8:45 am]

BILLING CODE 8011–01–P

SECURITIES AND EXCHANGE COMMISSION

[Release No. 34–61460; File No. SR–NASDAQ–2010–018]

Self-Regulatory Organizations; The NASDAQ Stock Market LLC; Notice of Filing and Immediate Effectiveness of Proposed Rule Change To Modify NASDAQ's Order Routing Rule

February 1, 2010.

Pursuant to Section 19(b)(1) of the Securities Exchange Act of 1934 ("Act") [1] and Rule 19b–4 thereunder,[2] notice is hereby given that on January 29, 2010, The NASDAQ Stock Market LLC ("Nasdaq" or the "Exchange") filed with the Securities and Exchange Commission ("Commission") the proposed rule change as described in Items I and II below, which Items have been prepared by Nasdaq. Nasdaq has designated the proposed rule change as constituting a rule change under Rule 19b–4(f)(6) under the Act,[3] which renders the proposal effective upon filing with the Commission. The Commission is publishing this notice to solicit comments on the proposed rule change from interested persons.

I. Self-Regulatory Organization's Statement of the Terms of Substance of the Proposed Rule Change

The Exchange is filing this proposed rule change to amend Rule 4758 to describe available routing options in greater detail, to modify an existing routing option, and to add a new routing option. NASDAQ proposes to implement the rule change on February 1, 2010. The text of the proposed rule change is available at *http://nasdaq.cchwallstreet.com/*, at the Exchange's principal office, and at the Commission's Public Reference Room.

II. Self-Regulatory Organization's Statement of the Purpose of, and Statutory Basis for, the Proposed Rule Change

In its filing with the Commission, the Exchange included statements concerning the purpose of and basis for the proposed rule change and discussed any comments it received on the proposed rule change. The text of these statements may be examined at the places specified in Item IV below. The Exchange has prepared summaries, set forth in Sections A, B, and C below, of the most significant aspects of such statements.

A. Self-Regulatory Organization's Statement of the Purpose of, and Statutory Basis for, the Proposed Rule Change

1. Purpose

NASDAQ is amending Rule 4758, which describes its order routing processes, to describe existing order routing options with greater specificity, to modify an existing routing option, and to add a new routing option. Currently, routing options available through NASDAQ are all variations of three main routing options, known as DOT, STGY, and SCAN. Although the rule language for these routing options describes the available variations of the main options in general terms, NASDAQ believes that understanding of these options would be enhanced by describing the different versions as separately named routing options. NASDAQ is also amending Rule 4758 to include a definition of "System routing table," defined as the proprietary process for determining the specific trading venues to which the NASDAQ System routes orders and the order in which it routes them. The definition reflects the fact that NASDAQ, like other trading venues, maintains different routing tables for different routing options and modifies them on a regular basis to reflect assessments about the destination markets. Such assessments consider factors such as a destination's latency, fill rates, reliability, and cost. Accordingly, the definition specifies that NASDAQ reserves the right to maintain a different routing table for different routing options and to modify routing tables at any time without notice.[4] All routing complies with the requirements of Rule 611 of Regulation NMS.

- DOT is a routing option for orders that the entering firm wishes to designate for participation in the NYSE or NYSE Amex opening or closing processes. DOT orders do not check the NASDAQ book prior to routing directly to NYSE or NYSE Amex. After attempting to execute at NYSE or NYSE Amex, DOT orders thereafter check the NASDAQ book for available shares and are then converted into SCAN or STGY orders, depending on the designation of the entering firm. If a DOT order designated to participate in the opening process is entered after 9:30 a.m., moreover, it will be converted into a SCAN or STGY order, depending on the designation of the entering firm.
- DOTI is a routing option under which orders check the NASDAQ book and destinations on the DOTI System routing table and then are sent to NYSE or NYSE Amex. Such orders do not return to the NASDAQ book if they are not executed, but rather remain on the NYSE or NYSE Amex book until executed, cancelled, or expired.
- STGY is a routing option under which orders check the NASDAQ book, check destinations on the STGY System routing table, and then return to the NASDAQ book. After returning to the NASDAQ book, a STGY order will subsequently route out to another market center if it posts a bid or offer that locks or crosses the STGY order.
- SKNY is a form of STGY in which the entering party instructs the System to bypass any market centers included in the STGY System routing table that are not posting Protected Quotations within the meaning of Regulation NMS.
- SCAN is a routing option under which orders check the NASDAQ book, check destinations on the SCAN System routing table, and then return to the NASDAQ book. After returning to the NASDAQ book, a SCAN order will not subsequently route out to another market center if it posts a bid or offer that locks or crosses the SCAN order.
- SKIP is a form of SCAN in which the entering party instructs the System to bypass any market centers included in the SCAN System routing table that are not posting Protected Quotations within the meaning of Regulation NMS.
- TFTY is a routing option that was formerly comprised within the definition of SCAN. TFTY orders currently do not check the NASDAQ book for available shares prior to routing to destinations on the TFTY System routing table. Thereafter, they return to the NASDAQ book and, like SCAN orders, do not route out again. TFTY is being modified by this proposed rule

[75] 17 CFR 200.30–3(a)(12).

[1] 15 U.S.C. 78s(b)(1).

[2] 17 CFR 240.19b–4.

[3] 17 CFR 240.19b–4(f)(6).

[4] At present, all System routing tables include NASDAQ's affiliate, NASDAQ OMX BX ("BX"). Thus, all routed orders have the opportunity to route to this venue, with the exception of DOT orders routed directly to the NYSE or NYSE Amex opening or closing processes and directed orders that are directed to route to venues other than BX.

change to provide users the option of checking the NASDAQ book prior to routing out.

• MOPP is a routing option formerly comprised within the definition of SCAN. MOPP orders route only to Protected Quotes, including the NASDAQ Market Center, but only for displayed size. If shares remain un-executed after routing, they are posted to the NASDAQ book and do not route out again.

• Directed Orders, as described in Rule 4751, are orders that are directed to an exchange other than NASDAQ as requested by the entering party without checking the NASDAQ book. Directed Orders must have a time-in-force of Immediate or Cancel and therefore do not post on the book of the market to which they route, nor do they return and post on NASDAQ.

• NASDAQ is introducing the new SAVE routing option, under which a market participant may specify that an order will either (i) route to BX, check the NASDAQ book, and then route to other venues on the SAVE System routing table, or (ii) check the NASDAQ book first and then route to destinations on the SAVE System routing table. Under the second option, the applicable routing table includes BX, and as is the case with all market destinations, the placement of BX on the routing table depends on NASDAQ's ongoing assessments of factors such as latency, fill rates, reliability, and cost. If shares remain un-executed after routing, they are posted to the NASDAQ book and do not route out again.

NASDAQ is also removing specific references to order types and times-in-force in the routing rule with a general statement that routing options may be combined with all available order types and times-in-force, with the exception of order types and times-in-force whose terms are inconsistent with the terms of a particular routing option. Thus, for example, a good-till-cancelled order could not be combined with the DOT routing option, since a DOT-routed order is intended to execute in another market's opening or closing process on a particular day. Finally, NASDAQ is removing obsolete language that had been added to Rule 4758 last year to reflect a commitment to distinguish "flash" orders from NASDAQ's protected quote. NASDAQ discontinued the use of flash orders shortly after it introduced them.[5]

2. *Statutory Basis*

NASDAQ believes that the proposed rule change is consistent with the provisions of Section 6 of the Act,[6] in general, and with Sections 6(b)(5) of the Act,[7] in particular, in that the proposal is designed to prevent fraudulent and manipulative acts and practices, to promote just and equitable principles of trade, to foster cooperation and coordination with persons engaged in regulating, clearing, settling, processing information with respect to, and facilitating transactions in securities, to remove impediments to and perfect the mechanism of a free and open market and a national market system, and, in general, to protect investors and the public interest. The proposed change to introduce the SAVE routing option and modify the TFTY routing option will provide market participants with greater flexibility in routing orders to low cost trading venues, including BX and other venues with low execution fees that are included on the System routing tables. The other modifications to Rule 4758 will enhance the clarity of the rule.

B. Self-Regulatory Organization's Statement on Burden on Competition

The Exchange does not believe that the proposed rule change will result in any burden on competition that is not necessary or appropriate in furtherance of the purposes of the Act.

C. Self-Regulatory Organization's Statement on Comments on the Proposed Rule Change Received From Members, Participants or Others

Written comments were neither solicited nor received.

III. Date of Effectiveness of the Proposed Rule Change and Timing for Commission Action

Because the foregoing proposed rule change does not: (i) Significantly affect the protection of investors or the public interest; (ii) impose any significant burden on competition; and (iii) become operative for 30 days from the date on which it was filed, or such shorter time as the Commission may designate, it has become effective pursuant to Section 19(b)(3)(A) of the Act[8] and Rule 19b–4(f)(6) thereunder.[9]

A proposed rule change filed pursuant to Rule 19b–4(f)(6) under the Act[10] normally does not become operative for 30 days after the date of its filing. However, Rule 19b–4(f)(6)[11] permits the Commission to designate a shorter time if such action is consistent with the protection of investors and the public interest. Nasdaq requests that the Commission waive the 30-day operative delay NASDAQ requests this waiver because it currently has the technological changes ready to support the proposed rule change, and believes that the benefits of greater flexibility and increased clarity that are expected from the rule change should not be delayed. The Commission believes that waiving the 30-day operative delay[12] is consistent with the protection of investors and the public interest and designates the proposal operative upon filing.

At any time within 60 days of the filing of the proposed rule change, the Commission may summarily abrogate such rule change if it appears to the Commission that such action is necessary or appropriate in the public interest, for the protection of investors, or otherwise in furtherance of the purposes of the Act.

IV. Solicitation of Comments

Interested persons are invited to submit written data, views, and arguments concerning the foregoing, including whether the proposed rule change is consistent with the Act. Comments may be submitted by any of the following methods:

Electronic Comments

• Use the Commission's Internet comment form (*http://www.sec.gov/rules/sro.shtml*); or

• Send an e-mail to *rule-comments@sec.gov*. Please include File Number SR–NASDAQ–2010–018 on the subject line.

Paper Comments

• Send paper comments in triplicate to Elizabeth M. Murphy, Secretary, Securities and Exchange Commission, 100 F Street, NE., Washington, DC 20549–1090.

All submissions should refer to File Number SR–NASDAQ–2010–018. This file number should be included on the subject line if e-mail is used. To help the Commission process and review your comments more efficiently, please use

[5] Securities Exchange Act Release No. 60570 (August 26, 2009), 74 FR 45505 (September 2, 2009) (SR–NASDAQ–2009–079).

[6] 15 U.S.C. 78f.

[7] 15 U.S.C. 78f(b)(5).

[8] 15 U.S.C. 78s(b)(3)(A).

[9] 17 CFR 240.19b–4(f)(6). In addition, Rule 19b–4(f)(6) requires a self-regulatory organization to give the Commission written notice of its intent to file the proposed rule change at least five business days prior to the date of filing of the proposed rule change, or such shorter time as designated by the Commission. Nasdaq has satisfied this requirement.

[10] 17 CFR 240.19b–4(f)(6).

[11] 17 CFR 240.19b–4(f)(6).

[12] For purposes only of waiving the 30-day operative delay, the Commission has considered the proposed rule's impact on efficiency, competition, and capital formation. *See* 15 U.S.C. 78c(f).

only one method. The Commission will post all comments on the Commission's Internet Web site (*http://www.sec.gov/rules/sro.shtml*). Copies of the submission, all subsequent amendments, all written statements with respect to the proposed rule change that are filed with the Commission, and all written communications relating to the proposed rule change between the Commission and any person, other than those that may be withheld from the public in accordance with the provisions of 5 U.S.C. 552, will be available for inspection and copying in the Commission's Public Reference Room, 100 F Street, NE., Washington, DC 20549, on official business days between the hours of 10 a.m. and 3 p.m. Copies of such filing also will be available for inspection and copying at the principal office of the Exchange. All comments received will be posted without change; the Commission does not edit personal identifying information from submissions. You should submit only information that you wish to make publicly available. All submissions should refer to File Number SR–NASDAQ–2010–018 and should be submitted on or before February 26, 2010.

For the Commission, by the Division of Trading and Markets, pursuant to delegated authority.[13]

Florence E. Harmon,

Deputy Secretary.

[FR Doc. 2010–2501 Filed 2–4–10; 8:45 am]

BILLING CODE 8011–01–P

[13] 17 CFR 200.30–3(a)(12).

DEPARTMENT OF STATE

[PUBLIC NOTICE 6894]

Culturally Significant Objects Imported for Exhibition

Determinations: "Compass and Rule: Architecture as Mathematical Practice in England, 1500–1750"

SUMMARY: Notice is hereby given of the following determinations: Pursuant to the authority vested in me by the Act of October 19, 1965 (79 Stat. 985; 22 U.S.C. 2459), Executive Order 12047 of March 27, 1978, the Foreign Affairs Reform and Restructuring Act of 1998 (112 Stat. 2681, *et seq.;* 22 U.S.C. 6501 note, *et seq.*), Delegation of Authority No. 234 of October 1, 1999, Delegation of Authority No. 236 of October 19, 1999, as amended, and Delegation of Authority No. 257 of April 15, 2003 [68 FR 19875], I hereby determine that the objects to be included in the exhibition "Compass and Rule: Architecture as Mathematical Practice in England, 1500–1750," imported from abroad for temporary exhibition within the United States, are of cultural significance. The objects are imported pursuant to loan agreements with the foreign owners or custodians. I also determine that the exhibition or display of the exhibit objects at the Yale Center for British Art, New Haven, Connecticut, from on or about February 18, 2010, until on or about May 30, 2010, and at possible additional exhibitions or venues yet to be determined, is in the national interest. I have ordered that Public Notice of these Determinations be published in the **Federal Register**.

FOR FURTHER INFORMATION CONTACT: For further information, including a list of the exhibit objects, contact Paul W. Manning, Attorney-Adviser, Office of the Legal Adviser, U.S. Department of State (telephone: 202–632–6469). The mailing address is U.S. Department of State, SA–5, L/PD, Fifth Floor (Suite 5H03), Washington, DC 20522–0505.

Dated: February 1, 2010.

Maura M. Pally,

Deputy Assistant Secretary for Professional and Cultural Exchanges, Bureau of Educational and Cultural Affairs, Department of State.

[FR Doc. 2010–2551 Filed 2–4–10; 8:45 am]

BILLING CODE 4710–05–P

Federal Register

Friday,
February 5, 2010

Part II

The President

Proclamation 8476—National African American History Month, 2010

Proclamation 8477—American Heart Month, 2010

Memorandum of February 3, 2010—A Comprehensive Federal Strategy on Carbon Capture and Storage

Federal Register
Vol. 75, No. 24
Friday, February 5, 2010

Presidential Documents

Title 3—

The President

Proclamation 8476 of February 1, 2010

National African American History Month, 2010

By the President of the United States of America

A Proclamation

In the centuries since African Americans first arrived on our shores, they have known the bitterness of slavery and oppression, the hope of progress, and the triumph of the American Dream. African American history is an essential thread of the American narrative that traces our Nation's enduring struggle to perfect itself. Each February, we recognize African American History Month as a moment to reflect upon how far we have come as a Nation, and what challenges remain. This year's theme, "The History of Black Economic Empowerment," calls upon us to honor the African Americans who overcame injustice and inequality to achieve financial independence and the security of self empowerment that comes with it.

Nearly 100 years after the Civil War, African Americans still faced daunting challenges and indignities. Widespread racial prejudice inhibited their opportunities, and institutional discrimination such as black codes and Jim Crow laws denied them full citizenship rights. Despite these seemingly impossible barriers, pioneering African Americans blazed trails for themselves and their children. They became skilled workers and professionals. They purchased land, and a new generation of black entrepreneurs founded banks, educational institutions, newspapers, hospitals, and businesses of all kinds.

This month, we recognize the courage and tenacity of so many hard-working Americans whose legacies are woven into the fabric of our Nation. We are heirs to their extraordinary progress. Racial prejudice is no longer the steepest barrier to opportunity for most African Americans, yet substantial obstacles remain in the remnants of past discrimination. Structural inequalities—from disparities in education and health care to the vicious cycle of poverty—still pose enormous hurdles for black communities across America.

Overcoming today's challenges will require the same dedication and sense of urgency that enabled past generations of African Americans to rise above the injustices of their time. That is why my Administration is laying a new foundation for long-term economic growth that helps more than just a privileged few. We are working hard to give small businesses much-needed credit, to slash tax breaks for companies that ship jobs overseas, and to give those same breaks to companies that create jobs here at home. We are also reinvesting in our schools and making college more affordable, because a world class education is our country's best roadmap to prosperity.

These initiatives will expand opportunities for African Americans, and for all Americans, but parents and community leaders must also be partners in this effort. We must push our children to reach for the full measure of their potential, just as the innovators who succeeded in previous generations pushed their children to achieve something greater. In the volumes of black history, much remains unwritten. Let us add our own chapter, full of progress and ambition, so that our children's children will know that we, too, did our part to erase an unjust past and build a brighter future.

NOW, THEREFORE, I, BARACK OBAMA, President of the United States of America, by virtue of the authority vested in me by the Constitution and the laws of the United States, do hereby proclaim February 2010 as National African American History Month. I call upon public officials, educators, librarians, and all the people of the United States to observe this month with appropriate programs, ceremonies, and activities.

IN WITNESS WHEREOF, I have hereunto set my hand this first day of February, in the year of our Lord two thousand ten, and of the Independence of the United States of America the two hundred and thirty-fourth.

[FR Doc. 2010–2742
Filed 2–4–10; 11:15 am]
Billing code 3195–W0–P

Presidential Documents

Proclamation 8477 of February 1, 2010

American Heart Month, 2010

By the President of the United States of America

A Proclamation

Heart disease is the leading cause of death in the United States. Its victims are women and men, and people of all backgrounds and ethnicities, in all regions of our country. Although heart disease is one of our Nation's most costly and widespread health problems, it is among the most preventable. During American Heart Month, we rededicate ourselves to fighting this disease by improving our own heart-healthy habits, and by raising awareness in our homes and our communities.

Protecting our families from heart disease requires each of us to take responsibility for our health and that of our children—including exercising regularly, maintaining a healthy diet, avoiding tobacco, and raising our children to spend more time playing outside. Because obesity is a leading risk factor for heart disease, good nutrition and physical activity are crucial for all our families.

This month, we honor the health-care professionals, researchers, and heart health ambassadors who save lives and spare suffering. Every day, these dedicated individuals put themselves on the front lines of our fight against heart disease. To better equip them, my Administration is investing in cutting-edge research, such as a large DNA sequencing study funded by the National Institutes of Health which could unlock earlier treatment options for high-risk individuals.

The National Heart, Lung, and Blood Institute is sponsoring *The Heart Truth* campaign, which reminds women of their risk for heart disease and empowers them to reduce it. On Friday, February 5, Michelle and I encourage all Americans to recognize the campaign's National Wear Red Day by wearing red or the campaign's Red Dress Pin to support women's heart disease awareness and remind all women about their risk for heart disease.

In acknowledgement of the importance of the ongoing fight against cardiovascular disease, the Congress, by Joint Resolution approved December 30, 1963, as amended (77 Stat. 843; 36 U.S.C. 101), has requested that the President issue an annual proclamation designating February as "American Heart Month."

NOW, THEREFORE, I, BARACK OBAMA, President of the United States of America, do hereby proclaim February 2010 as American Heart Month, and I invite all Americans to participate in National Wear Red Day on February 5, 2010. I also invite the Governors of the States, the Commonwealth of Puerto Rico, officials of other areas subject to the jurisdiction of the United States, and the American people to join me in recognizing and reaffirming our commitment to fighting cardiovascular disease.

IN WITNESS WHEREOF, I have hereunto set my hand this first day of February, in the year of our Lord two thousand ten, and of the Independence of the United States of America the two hundred and thirty-fourth.

[FR Doc. 2010–2743
Filed 2–4–10; 11:15 am]
Billing code 3195–W0–P

Presidential Documents

Memorandum of February 3, 2010

A Comprehensive Federal Strategy on Carbon Capture and Storage

Memorandum for the Secretary of State[,] the Secretary of the Treasury[,] the Attorney General[,] the Secretary of the Interior[,] the Secretary of Agriculture[,] the Secretary of Commerce[,] the Secretary of Labor[,] the Secretary of Transportation[,] the Secretary of Energy[,] the Director of the Office of Management and Budget[,] the Administrator of the Environmental Protection Agency[,] the Chairman of the Federal Energy Regulatory Commission[,] the Director of the Office of Science and Technology Policy[, and] the Chair of the Council on Environmental Quality

For decades, the coal industry has supported quality high-paying jobs for American workers, and coal has provided an important domestic source of reliable, affordable energy. At the same time, coal-fired power plants are the largest contributor to U.S. greenhouse gas emissions and coal accounts for 40 percent of global emissions. Charting a path toward clean coal is essential to achieving my Administration's goals of providing clean energy, supporting American jobs, and reducing emissions of carbon pollution. Rapid commercial development and deployment of clean coal technologies, particularly carbon capture and storage (CCS), will help position the United States as a leader in the global clean energy race.

My Administration is already pursuing a set of concrete initiatives to speed the commercial development of safe, affordable, and broadly deployable CCS technologies. We have made the largest Government investment in carbon capture and storage of any nation in history, and these investments are being matched by private capital. The Department of Energy is conducting a comprehensive clean coal technology program including research, development, and demonstration of CCS technologies and is pursuing important international cooperative initiatives to spur demonstration and deployment of CCS. The Environmental Protection Agency is developing regulations that address the safety, efficacy, and environmental soundness of injecting and storing carbon dioxide underground. The Department of the Interior is assessing, in coordination with the Department of Energy, the country's geologic capacity to store carbon dioxide and promoting geological storage demonstration projects on public lands. All of this work builds on the firm scientific basis that now exists for the viability of CCS technology.

To further this work and develop a comprehensive and coordinated Federal strategy to speed the commercial development and deployment of clean coal technologies, I hereby establish an Interagency Task Force on Carbon Capture and Storage (Task Force). You shall each designate a senior official from your respective agency to serve on the Task Force, which shall be Co-Chaired by the designees from the Department of Energy and the Environmental Protection Agency.

The Task Force shall develop within 180 days of the date of this memorandum a proposed plan to overcome the barriers to the widespread, cost-effective deployment of CCS within 10 years, with a goal of bringing 5 to 10 commercial demonstration projects online by 2016. The plan should explore incentives for commercial CCS adoption and address any financial, economic, technological, legal, institutional, social, or other barriers to deployment. The Task Force should consider how best to coordinate existing

administrative authorities and programs, including those that build international collaboration on CCS, as well as identify areas where additional administrative authority may be necessary. The Co-Chairs shall report progress periodically to the President through the Chair of the Council on Environmental Quality.

Ultimately, comprehensive energy and climate legislation that puts a cap on carbon pollution will provide the largest incentive for CCS because it will create stable, long-term, market-based incentives to channel private investment in low-carbon technologies. My Administration's new CCS strategy will pave the way for this energy transition by identifying and removing barriers to rapid commercial deployment and by providing greater legal and regulatory clarity. This will help to spur private investment in CCS in the near term—investment that will create good jobs and benefit communities.

This memorandum shall be implemented consistent with applicable law and subject to the availability of appropriations. This memorandum is not intended to, and does not, create any right or benefit, substantive or procedural, enforceable at law or in equity by any party against the United States, its departments, agencies, or entities, its officers, employees, or agents, or any other person.

The Secretary of Energy is hereby authorized and directed to publish this memorandum in the *Federal Register*.

THE WHITE HOUSE,
WASHINGTON, February 3, 2010

[FR Doc. 2010–2744
Filed 2–4–10; 11:15 am]
Billing code 6450–01–P

Reader Aids

Federal Register

Vol. 75, No. 24

Friday, February 5, 2010

CUSTOMER SERVICE AND INFORMATION

Federal Register/Code of Federal Regulations	
General Information, indexes and other finding aids	**202–741–6000**
Laws	**741–6000**
Presidential Documents	
Executive orders and proclamations	**741–6000**
The United States Government Manual	**741–6000**
Other Services	
Electronic and on-line services (voice)	**741–6020**
Privacy Act Compilation	**741–6064**
Public Laws Update Service (numbers, dates, etc.)	**741–6043**
TTY for the deaf-and-hard-of-hearing	**741–6086**

ELECTRONIC RESEARCH

World Wide Web

Full text of the daily Federal Register, CFR and other publications is located at: **http://www.gpoaccess.gov/nara/index.html**

Federal Register information and research tools, including Public Inspection List, indexes, and links to GPO Access are located at: **http://www.archives.gov/federal__register**

E-mail

FEDREGTOC-L (Federal Register Table of Contents LISTSERV) is an open e-mail service that provides subscribers with a digital form of the Federal Register Table of Contents. The digital form of the Federal Register Table of Contents includes HTML and PDF links to the full text of each document.

To join or leave, go to **http://listserv.access.gpo.gov** and select *Online mailing list archives, FEDREGTOC-L, Join or leave the list (or change settings);* then follow the instructions.

PENS (Public Law Electronic Notification Service) is an e-mail service that notifies subscribers of recently enacted laws.

To subscribe, go to **http://listserv.gsa.gov/archives/publaws-l.html** and select *Join or leave the list (or change settings);* then follow the instructions.

FEDREGTOC-L and **PENS** are mailing lists only. We cannot respond to specific inquiries.

Reference questions. Send questions and comments about the Federal Register system to: **fedreg.info@nara.gov**

The Federal Register staff cannot interpret specific documents or regulations.

Reminders. Effective January 1, 2009, the Reminders, including Rules Going Into Effect and Comments Due Next Week, no longer appear in the Reader Aids section of the Federal Register. This information can be found online at **http://www.regulations.gov.**

CFR Checklist. Effective January 1, 2009, the CFR Checklist no longer appears in the Federal Register. This information can be found online at **http://bookstore.gpo.gov/.**

FEDERAL REGISTER PAGES AND DATE, FEBRUARY

4973–5224 1
5225–5480 2
5481–5674 3
5675–5876 4
5877–6088 5

CFR PARTS AFFECTED DURING FEBRUARY

At the end of each month, the Office of the Federal Register publishes separately a List of CFR Sections Affected (LSA), which lists parts and sections affected by documents published since the revision date of each title.

3 CFR

Proclamations:
8476 6083
8477 6085

Executive Orders:
13530 5481

Administrative Orders:
Notices:
Notice of February 2, 2010 5675
Memorandums:
Memo. of January 29, 2010 5485
Memorandum of February 3, 2010 6087

5 CFR

Proposed Rules:
2423 5003

6 CFR

5 ..... 5487, 5491

7 CFR

247 5877
925 5879
944 5879

Proposed Rules:
929 ..... 5898, 5900
1720 5902

8 CFR

1 5225
292 5225

10 CFR

50 5495

Proposed Rules:
431 5544

14 CFR

39 ..... 5677, 5681, 5684, 5685, 5689 5690, 5692, 5695
43 5204
61 5204
91 5204
97 ..... 5230, 5232
141 5204
314 5697
331 5234

Proposed Rules:
71 ..... 5007, 5702, 5703, 5704, 5904, 5905

15 CFR

902 5498

18 CFR

284 5178

20 CFR

10 5499

21 CFR

73 5887
558 5887
1309 4973

24 CFR

201 5706
203 5706
3280 5888
3282 5888

26 CFR

54 5452

Proposed Rules:
1 5253
54 5410

28 CFR

0 4982

29 CFR

2590 5410

Proposed Rules:
403 5456
1910 ..... 5545, 5707
2509 5253
2520 5253
2550 5253

30 CFR

Proposed Rules:
57 5009
75 5009

31 CFR

548 5502

32 CFR

706 5235

33 CFR

165 5511

Proposed Rules:
165 5907

37 CFR

382 5513

Proposed Rules:
41 5012

39 CFR

3020 5236

40 CFR

9 4983
52 ..... 5514, 5698
180 ..... 5515, 5518, 5522, 5526
721 4983

Proposed Rules:
52 5707
228 5708

320 5715
721 5546

44 CFR

64 ....5890, 5893
67 5894
Proposed Rules:
67 ....5909, 5925, 5929, 5930

45 CFR

146 5410

47 CFR

80 5241
Proposed Rules:
52 5013
73 5015

48 CFR

512 5241
552 5241
Proposed Rules:
1 5716
2 5716
3 5716
5 5716
6 5716
7 5716
8 5716
12 5716
13 5716
15 5716
16 5716
17 5716
19 5716
22 5716
23 5716
28 5716
32 5716
36 5716
42 5716
43 5716
50 5716
52 5716

49 CFR

7 5243
10 5243
26 5535
40 5243
171 5376
172 5376
173 5376
174 5376
178 5376
192 ....5224, 5536
195 5536
390 4996
578 5224
599 5248
Proposed Rules:
23 5551
40 5722
107 5258
571 5553
572 5931
1244 5261

50 CFR

648 ....5498, 5537
679 ....5251, 5541
Proposed Rules:
17 ....5263, 5732
226 5015
300 5745
648 5016

LIST OF PUBLIC LAWS

This is the final list of public bills from the 1st session of Congress which have become Federal laws. It may be used in conjunction with "P L U S" (Public Laws Update Service) on 202–741–6043. This list is also available online at *http://www.archives.gov/federal-register/laws.html*.

The text of laws is not published in the **Federal Register** but may be ordered in "slip law" (individual pamphlet) form from the Superintendent of Documents, U.S. Government Printing Office, Washington, DC 20402 (phone, 202–512–1808). The text will also be made available on the Internet from GPO Access at *http://www.gpoaccess.gov/plaws/index.html*. Some laws may not yet be available.

H.R. 1817/P.L. 111–128

To designate the facility of the United States Postal Service located at 116 North West Street in Somerville, Tennessee, as the "John S. Wilder Post Office Building". (Jan. 29, 2010; 123 Stat. 3487)

H.R. 2877/P.L. 111–129

To designate the facility of the United States Postal Service located at 76 Brookside Avenue in Chester, New York, as the "1st Lieutenant Louis Allen Post Office". (Jan. 29, 2010; 123 Stat. 3488)

H.R. 3072/P.L. 111–130

To designate the facility of the United States Postal Service located at 9810 Halls Ferry Road in St. Louis, Missouri, as the "Coach Jodie Bailey Post Office Building". (Jan. 29, 2010; 123 Stat. 3489)

H.R. 3319/P.L. 111–131

To designate the facility of the United States Postal Service located at 440 South Gulling Street in Portola, California, as the "Army Specialist Jeremiah Paul McCleery Post Office Building". (Jan. 29, 2010; 123 Stat. 3490)

H.R. 3539/P.L. 111–132

To designate the facility of the United States Postal Service located at 427 Harrison Avenue in Harrison, New Jersey, as the "Patricia D. McGinty-Juhl Post Office Building". (Jan. 29, 2010; 123 Stat. 3491)

H.R. 3667/P.L. 111–133

To designate the facility of the United States Postal Service located at 16555 Springs Street in White Springs, Florida, as the "Clyde L. Hillhouse Post Office Building". (Jan. 29, 2010; 123 Stat. 3492)

H.R. 3767/P.L. 111–134

To designate the facility of the United States Postal Service located at 170 North Main Street in Smithfield, Utah, as the "W. Hazen Hillyard Post Office Building". (Jan. 29, 2010; 123 Stat. 3493)

H.R. 3788/P.L. 111–135

To designate the facility of the United States Postal Service located at 3900 Darrow Road in Stow, Ohio, as the "Corporal Joseph A. Tomci Post Office Building". (Jan. 29, 2010; 123 Stat. 3494)

H.R. 1377/P.L. 111–137

To amend title 38, United States Code, to expand veteran eligibility for reimbursement by the Secretary of Veterans Affairs for emergency treatment furnished in a non-Department facility, and for other purposes. (Feb. 1, 2010; 123 Stat. 3495)

This is a continuing list of public bills from the current session of Congress which have become Federal laws. It may be used in conjunction with "P L U S" (Public Laws Update Service) on 202–741–6043. This list is also available online at *http://www.archives.gov/federal-register/laws.html*.

H.R. 4508/P.L. 111–136

To provide for an additional temporary extension of programs under the Small Business Act and the Small Business Investment Act of 1958, and for other purposes. (Jan. 29, 2010; 124 Stat. 6; 1 page)

S. 692/P.L. 111–138

To provide that claims of the United States to certain documents relating to Franklin Delano Roosevelt shall be treated as waived and relinquished in certain circumstances. (Feb. 1, 2010; 124 Stat. 7; 1 page)

Last List February 1, 2010

Public Laws Electronic Notification Service (PENS)

PENS is a free electronic mail notification service of newly enacted public laws. To subscribe, go to *http://listserv.gsa.gov/archives/publaws-l.html*

Note: This service is strictly for E-mail notification of new laws. The text of laws is not available through this service. **PENS** cannot respond to specific inquiries sent to this address.