FIGURE 7 - VEHICLE COORDINATE REFERENCE SYSTEM FOR INERTIAL TESTING

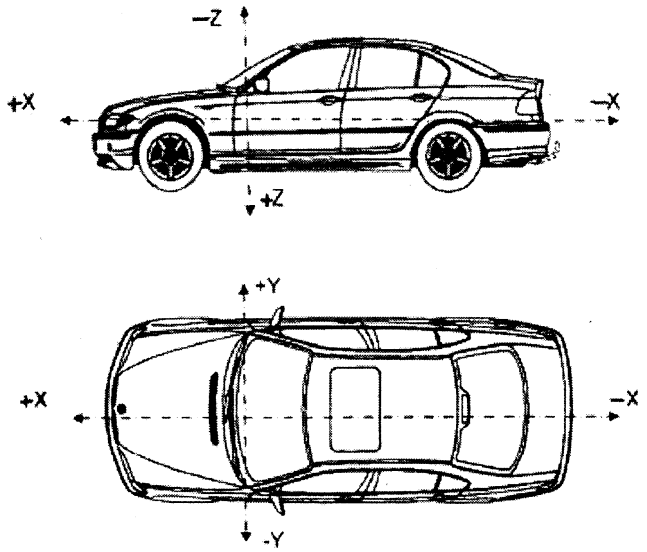

X = longitudinal direction
Y = transverse direction
Z = vertical direction

* * * * *

Issued: February 4, 2010.

David L. Strickland,

Administrator.

[FR Doc. 2010–2837 Filed 2–18–10; 8:45 am]

BILLING CODE 4910–59–P

DEPARTMENT OF COMMERCE

National Oceanic and Atmospheric Administration

50 CFR Part 229

[Docket No. 080721862–8864–01]

RIN 0648–AW51

Taking of Marine Mammals Incidental to Commercial Fishing Operations; Harbor Porpoise Take Reduction Plan Regulations

AGENCY: National Marine Fisheries Service (NMFS), National Oceanic and Atmospheric Administration (NOAA), Commerce.

ACTION: Final rule.

SUMMARY: NMFS issues this final rule to amend the regulations implementing the Harbor Porpoise Take Reduction Plan (HPTRP) to address the increased incidental mortality and serious injury of the Gulf of Maine/Bay of Fundy (GOM/BOF) stock of harbor porpoises (*Phocoena phocoena*) in gillnet fisheries throughout the stock's U.S. range.

DATES: Effective March 22, 2010.

ADDRESSES: Copies of the final Environmental Assessment (EA) and Regulatory Impact Review/Final Regulatory Flexibility Analysis (RIR/FRFA) for this action, as well as the Harbor Porpoise Take Reduction Team (HPTRT) meeting summaries and supporting documents, may be obtained from the HPTRP Web site (*http://www.nero.noaa.gov/hptrp*) or by writing to Diane Borggaard, NMFS, Northeast Region, Protected Resources Division, 55 Great Republic Drive, Suite 04–400, Gloucester, MA 01930.

FOR FURTHER INFORMATION CONTACT: Amanda Johnson, NMFS, Northeast Region, 978–282–8463, *amanda.johnson@noaa.gov;* or Melissa Andersen, NMFS, Office of Protected Resources, 301–713–2322, *melissa.andersen@noaa.gov.*

SUPPLEMENTARY INFORMATION:

Background

The HPTRP was developed pursuant to section 118(f) of the Marine Mammal Protection Act (MMPA), 16 U.S.C. 1361–1423h, to reduce the level of serious injury and mortality of the GOM/BOF stock of harbor porpoises. This final rule implements modifications to the HPTRP to address increased mortalities of harbor porpoises in commercial gillnet fisheries due to non-compliance with the HPTRP requirements and observed interactions occurring outside of existing HPTRP management areas. These modifications implement measures that apply to both the New England and Mid-Atlantic portions of the HPTRP.

Recent harbor porpoise bycatch estimates indicate that, when calculating the average estimated mortality for the period between 2002 and 2006, bycatch exceeded the stock's potential biological removal level (PBR). The 2008 Stock Assessment Report (SAR) indicates that the current annual estimated harbor porpoise incidental bycatch is 866 animals per year, which exceeds the current PBR of 610 animals (Waring *et al.,* 2009). In December 2007, NMFS reconvened the HPTRT to discuss the most recent harbor porpoise abundance and bycatch information for gillnet fisheries from Maine through North Carolina. The HPTRT used this information to develop a suite of recommended modifications to the HPTRP that would reduce takes to below the stock's PBR level and to a rate approaching a zero mortality and serious injury rate, known as the zero mortality rate goal (ZMRG), which is defined as 10 percent of PBR. The recommendations included expanding seasonal and temporal requirements within the HPTRP management areas, incorporating additional management areas, and creating areas that would seasonally close to gillnet fisheries if certain levels of harbor porpoise bycatch

are exceeded (consequence closure area strategy).

The HPTRT also recommended a number of non-regulatory measures that complement NMFS' strategy for monitoring the effectiveness of the HPTRP. NMFS will collaborate with its state partners in both the New England and Mid-Atlantic regions to conduct annual workshops with gillnet fishermen to increase compliance with the HPTRP and to provide information on recent compliance and harbor porpoise bycatch data. These meetings are especially important for gillnet fishermen in New England who fish in those HPTRP management areas that could potentially be impacted by the consequence closure strategy. Additionally, codifying the HPTRP into state regulations has the potential to increase compliance through future joint enforcement efforts between NMFS and state agencies.

NMFS supports efforts undertaken by the states to develop education and enforcement efforts to increase HPTRP compliance, and will assist in these efforts as needed. NMFS will assist these efforts by providing HPTRT members with annual compliance and bycatch information for both New England and the Mid-Atlantic, based on observed harbor porpoise serious injuries and mortalities. It is crucial that HPTRT members disseminate this information to their constituents, especially the gillnet industry, because these updates will analyze harbor porpoise bycatch rates in comparison to the target bycatch rates specified for the consequence closure areas.

To support the implementation of the regulatory and non-regulatory components of this action, NMFS will continue to work with its partners to monitor compliance and enforce the regulatory components of the HPTRP. In addition to collecting vital fisheries and incidental take information, the Northeast Fisheries Observer Program will continue its efforts to acquire new pinger detectors that will be sufficient for field use. NMFS also will continue its enforcement efforts through collaboration with its state enforcement partners, as well as the U.S. Coast Guard and NOAA Office of Law Enforcement. Such efforts include directed enforcement patrols and detecting functional pingers through the use of in-water pinger detection devices.

NMFS issued a proposed rule (74 FR 63058, July 21, 2009) that included a suite of additional HPTRP measures that will reduce harbor porpoise mortality due to interaction with commercial gillnet fisheries in New England and the Mid-Atlantic to levels below the stock's current PBR of 610 animals. This final rule implements the measures, many of which were based on consensus recommendations from the HPTRT, contained in the proposed rule. This action pursues the conservation goals established by the MMPA to reduce harbor porpoise bycatch to below PBR, and approaching insignificant levels.

Detailed background information on the development of this action, including a review of regional harbor porpoise bycatch information and recommendations provided to NMFS by the HPTRT, was provided in the July 21, 2009, proposed rule and is not repeated here.

Modifications to the HPTRP

This action addresses the bycatch of harbor porpoises that is currently above the stock's PBR level in New England and Mid-Atlantic waters. Many of the measures implemented through this rule are a result of consensus recommendations made by the HPTRT during their two recent meetings, which occurred in December 2007 and January 2008. For New England, NMFS is expanding seasonal and temporal requirements within the HPTRP management areas, incorporating additional management areas, and establishing "consequence" closure areas, which would seasonally close specific areas to gillnet fishing, should the specified target bycatch rate be exceeded by the observed average bycatch rate over the course of two consecutive management seasons. In the Mid-Atlantic, NMFS is establishing an additional management area and modifying the current tie-down requirement for large mesh gillnet gear. Additionally, NMFS is incorporating a provision within both the New England and Mid-Atlantic regulations to allow research to be conducted within the HPTRP management areas when the research is authorized through a NMFS scientific research permit. Finally, NMFS is making regulatory text corrections and clarifications.

New England Component

In the New England component of the HPTRP, NMFS is augmenting the existing HPTRP by incorporating two new management areas with seasonal pinger requirements: The Stellwagen Bank and Southern New England Management Areas. The Stellwagen Bank Management Area will require pingers from November through May. The Southern New England Management Area will require pingers on gillnets from December through May, while retaining the Cape Cod South Closure Area during March. NMFS is modifying one of the latitudinal boundaries of the Massachusetts Bay Management Area to 42°15′ N. lat., to eliminate the small gap of unregulated waters between this management area and the southern boundary of the Western Gulf of Maine Closure Area under the Northeast Multispecies Fishery Management Plan. Additionally, NMFS is extending the seasonal pinger requirements in the Massachusetts Bay Management Area to include November. Figure 1 depicts the management measures for the New England component of the HPTRP implemented by this action.

BILLING CODE 3510–22–P

Figure 1: HPTRP management scheme for New England when target bycatch rates are not exceeded

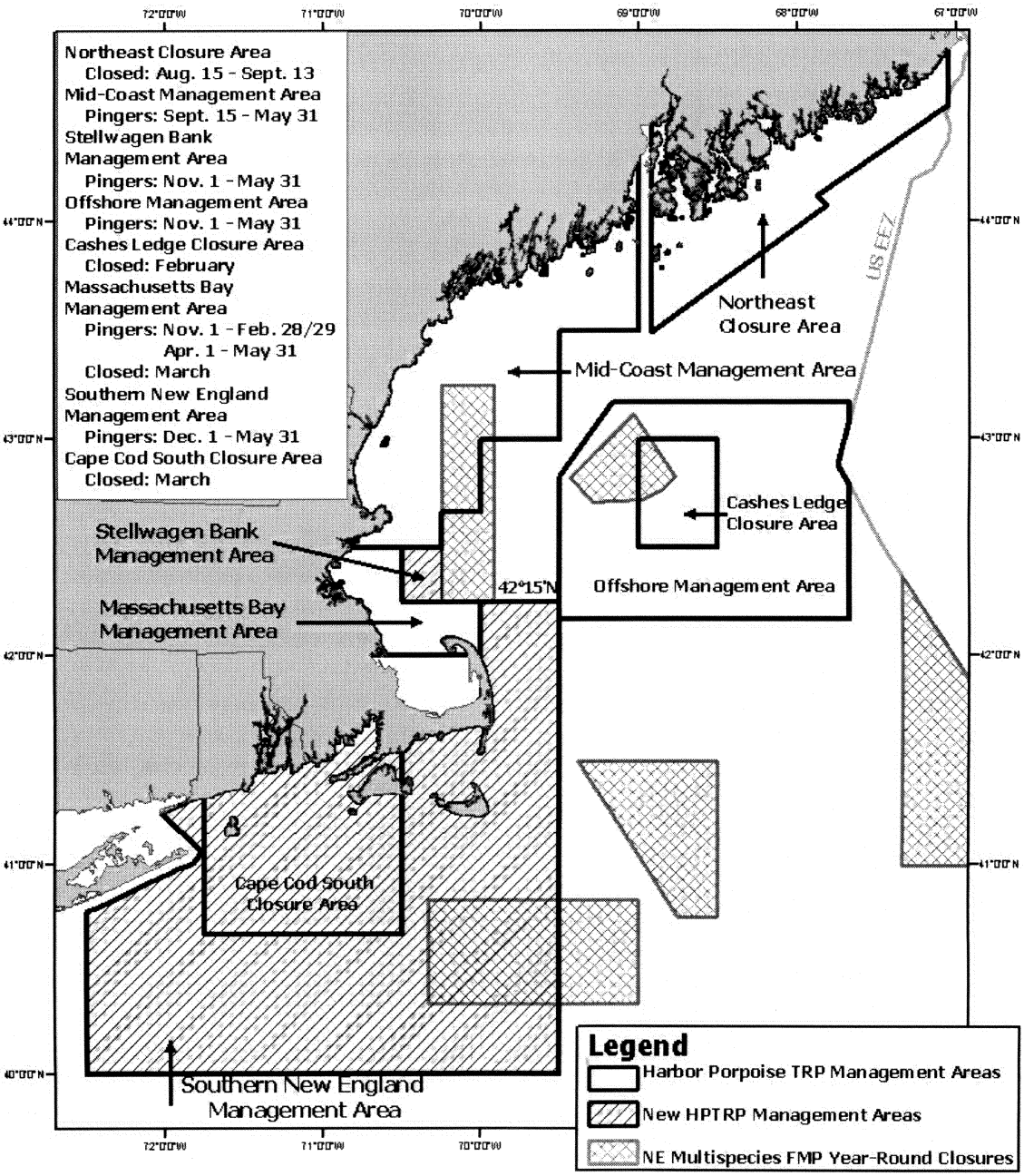

This action also incorporates the concept of "consequence" closure areas to alleviate non-compliance with pinger requirements in certain management areas. The Cape Cod South Expansion and East of Cape Cod Consequence Closure Areas, and their associated seasonal gillnet gear closures, will be triggered if the observed average bycatch rate of harbor porpoises in the Southern New England Management Area exceeds the target bycatch rate of 0.023 harbor porpoise takes/mtons after two consecutive management seasons (December through May). If triggered, these two areas will be closed annually to gillnet fishing from February through April. When the consequence closure areas are not closed (December, January, and May), the seasonal pinger requirements of the Southern New England Management Area will remain in effect.

The Coastal Gulf of Maine Consequence Closure Area, and its associated seasonal gillnet gear closure, will be triggered if the observed average

bycatch rates of harbor porpoises in the Mid-Coast, Stellwagen Bank, and Massachusetts Bay Management Areas (combined) exceed the target bycatch rate of 0.031 harbor porpoise takes/mtons after two consecutive management seasons (September 15 through May 31 for the Mid-Coast Management Area, and November 1 through May 31 for the Stellwagen Bank and Massachusetts Bay Management Areas). If the target bycatch rate is met, this area will be closed annually to gillnet fishing in October and November. When this area is not closed, the seasonal requirements of the three management areas will remain in effect, including the March gillnet closure in the Massachusetts Bay Management Area.

Figure 2 depicts the management measures for the New England component implemented by this action, including the three consequence closure areas.

Figure 2: HPTRP management scheme for New England when both target bycatch rates are exceeded (i.e., consequence closure areas triggered)

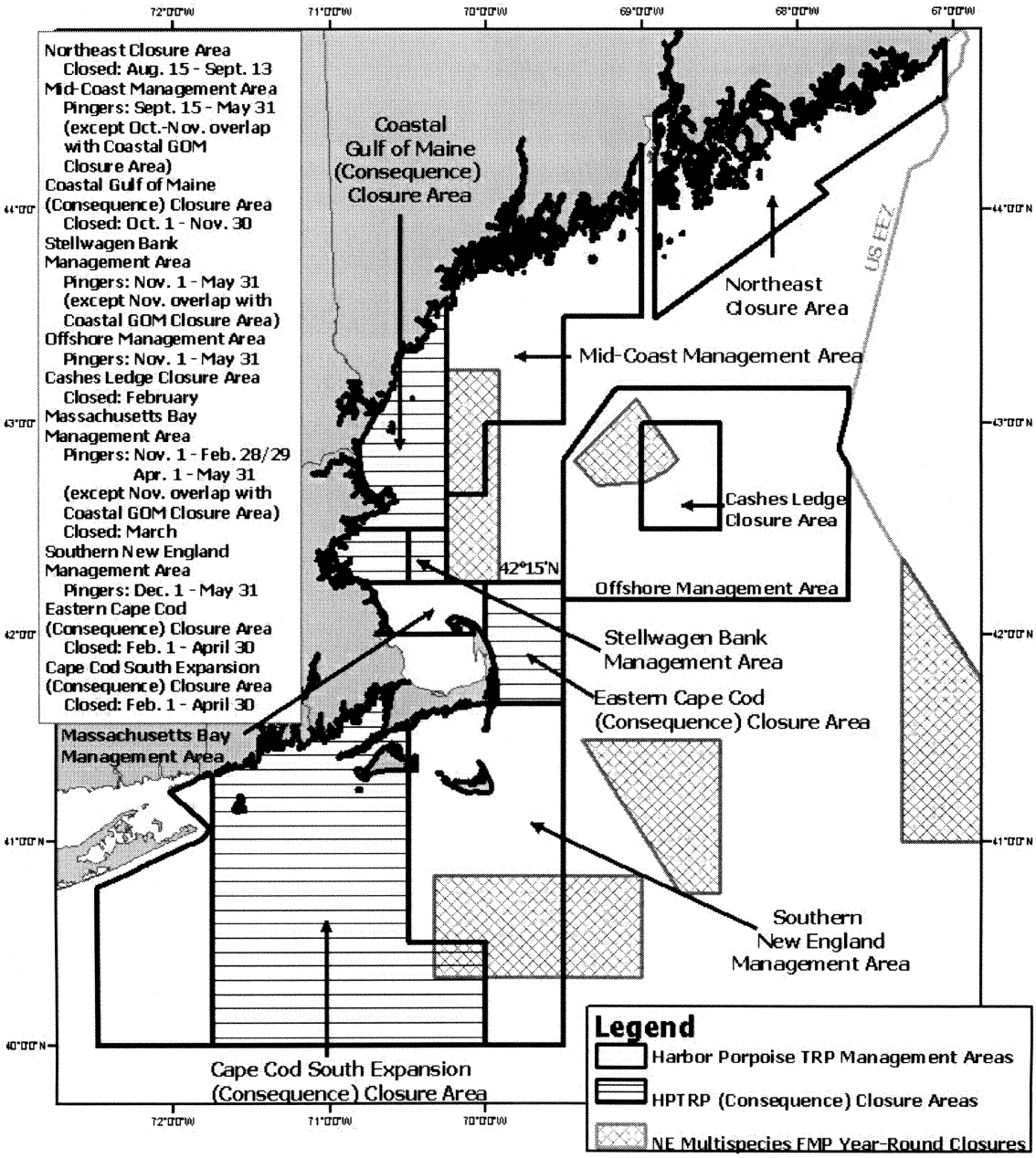

If any of the consequence closure areas are triggered, they will remain in effect until bycatch levels of the GOM/BOF stock of harbor porpoises approach ZMRG, or until the HPTRT and NMFS develop and implement new conservation measures. If the consequence closure areas are not triggered after the first two management seasons have elapsed, NMFS will continue to monitor the observed bycatch rates in these management areas and adopt a rolling trigger in which the most recent 2 years of bycatch information will be averaged and compared on an annual basis to the specified bycatch rates for each management area.

All impacts of the consequence closure areas have been evaluated in the EA that accompanies this action. If it is necessary to establish consequence closure areas in the future, based on the most recent 2 years of observed harbor

porpoise bycatch data, NMFS will establish the appropriate consequence closure area(s) via notice in the **Federal Register.**

Technical Corrections—New England Component

This final rule incorporates all of the technical corrections for the New England component of the HPTRP as described in the preamble of the proposed rule. These include: (1) Incorporating shoreline latitude/longitude coordinates to more clearly specify HPTRP management area boundaries; (2) renaming "closure" areas as "management" areas, except for areas that exist only as complete closures; (3) clarifying the geographical enclosure of the Offshore and Cashes Ledge Management Areas by repeating the first area coordinate as the last coordinate; (4) correcting the regulatory text for the Mid-Coast Management Area to indicate that gillnet fishing is allowed within this area as long as pingers are used; (5) including a statement specifying that pingers must be placed every 300 ft (91.4 m) for gillnets that exceed 300 ft (91.4 m) in length; and (6) modifying the eastern boundary of the Offshore Management Area so that it does not cross the boundary of the Exclusive Economic Zone (EEZ).

Mid-Atlantic Component

In the Mid-Atlantic component of the HPTRP, NMFS is creating the Mudhole South Management Area, with seasonal gear restrictions and a closure period from February 1 through March 15 (Figure 3).

Figure 3: HPTRP management scheme for the Mid-Atlantic.

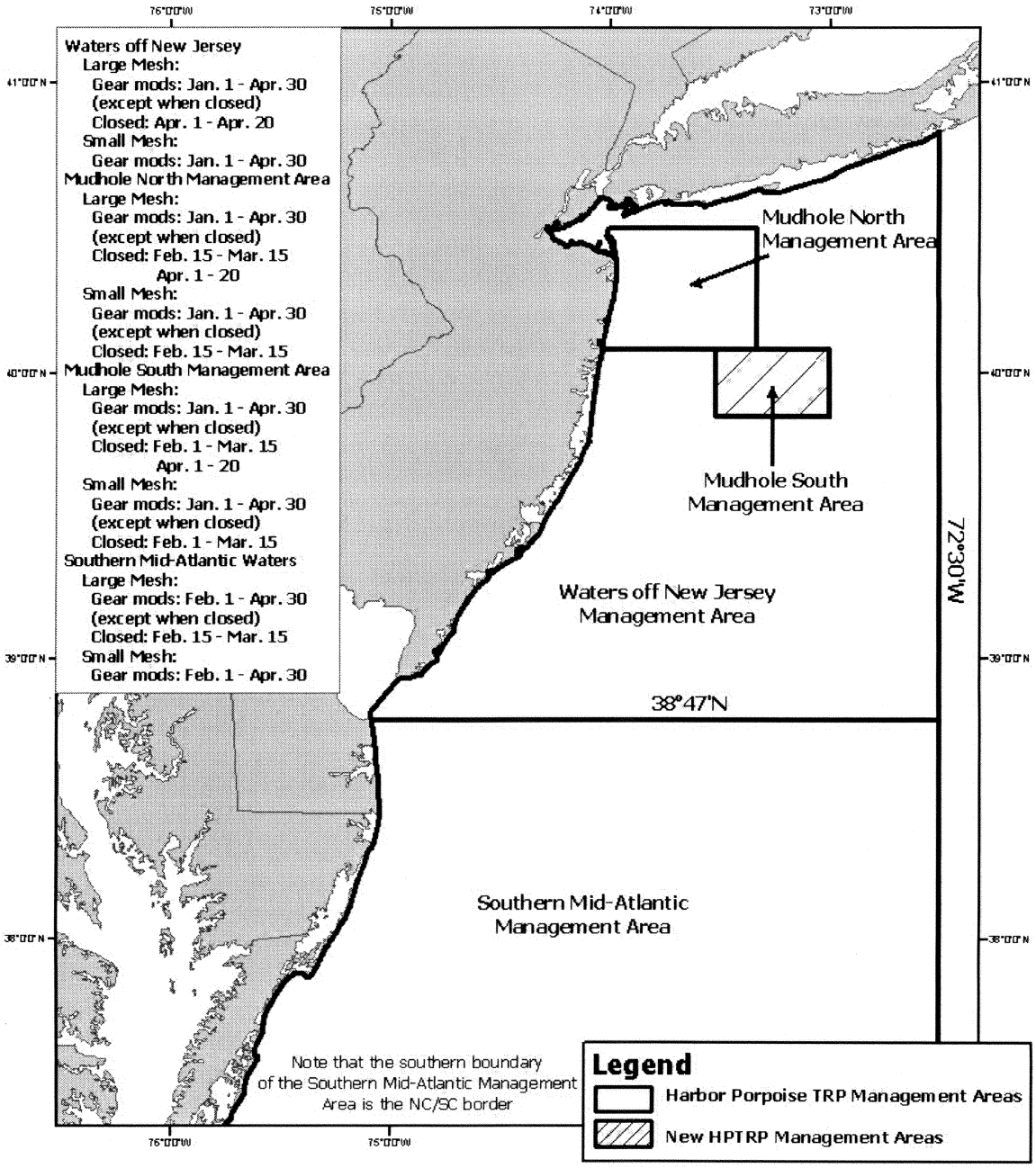

BILLING CODE 3510–22–C

Additionally, this action will increase the current tie-down spacing for large mesh gillnet gear to no more than 24 ft (7.3 m) apart along the floatline.

Technical Corrections—Mid-Atlantic Component

This final rule incorporates all of the technical corrections for the Mid-Atlantic component of the HPTRP as described in the preamble of the proposed rule. These include: (1) Incorporating shoreline latitude/longitude coordinates to more clearly specify HPTRP management area boundaries; (2) clarifying the number of nets per string allowed within the management areas for both large and small mesh gillnet gear; (3) extending the northern boundary of the Waters off New Jersey Management Area to the southern shoreline of Long Island, NY, at 40°50.1′ N. lat. and 72°30′ W. long.; (4) correcting the geographic boundary of the Mudhole North Management Area by incorporating a coordinate that intersects with the New Jersey shoreline at 40°28.1′ N. lat. and 74°00′ W. long.; (5) redefining the southern latitudinal boundary of the Southern Mid-Atlantic Management Area located at the North Carolina/South Carolina border to correspond with 33°51.1′ N. lat.; (6) amending the description of exempted waters in Virginia from Chincoteague to Ship Shoal Inlet to be the waters landward of the 72 COLREGS demarcation lines between these two inlets; and (7) removing the net tagging

requirement for large and small mesh gillnet gear.

Scientific Research

This action includes a scientific research component to the HPTRP regulations that would allow scientific research on gear and/or fishing practice modifications for reducing harbor porpoise takes to be conducted within the HPTRP management areas during the times the seasonal requirements are in effect, so long as the research is authorized through a scientific research permit granted under the MMPA. A scientific research permit would be obtained through the existing permit application process administered by NMFS, which includes a regional review and public comment period after publication of an announcement in the **Federal Register.**

Comments and Responses

NMFS published the proposed rule amending the HPTRP in the **Federal Register** on July 21, 2009 (74 FR 36058). Upon its publication, NMFS issued a press release summarizing the rule; posted the proposed rule on the HPTRP Web site; and notified affected fishermen and interested parties via several NMFS email distribution outlets. The publication of the proposed rule was followed by a 30-day public comment period, which ended on August 20, 2009. NMFS received nine comments via facsimile, letter, or electronic submission. All comments received were thoroughly reviewed by NMFS. The comments addressed several topics, such as education and outreach, management area boundaries and requirements, pingers, and the consequence closure strategy. The comments received are summarized below, followed by NMFS's responses.

General Comments

Comment 1: The majority of commenters expressed general support for the proposed rule.

Response: NMFS appreciates the comments it has received in support of this action, and notes that many of the proposed measures were based on consensus recommendations provided by the HPTRT during its December 2007 and January 2008 meetings.

Comment 2: One commenter expressed general opposition to the proposed rule by stating that bycatch of harbor porpoises in commercial gillnet gear needs to be immediately reduced to zero.

Response: NMFS understands the commenter's concern. However, the level of harbor porpoise takes need not be set to zero to ensure that the goals of the MMPA for harbor porpoise protection are met. Over the past two decades, NMFS has undertaken a variety of efforts to reduce the bycatch of harbor porpoises in commercial gillnet fisheries. After implementation of the HPTRP in late 1998 (63 FR 66464, December 2, 1998), bycatch of harbor porpoises was significantly reduced to below the stock's PBR level from levels as high as 1,500 animals per year, prior to implementation of the HPTRP, to a low of 310 animals per year. At that time, the bycatch level for harbor porpoises was below PBR and the bycatch trend was approaching ZMRG, which is defined in 50 CFR 229.2 as 10 percent of PBR.

However, as detailed in the EA supporting this rule, when data began to show that harbor porpoise interactions with gillnet fisheries were rising, NMFS immediately took actions to address the issue by sending permit holder letters, conducting outreach meetings from Maine through New Jersey, and reconvening the HPTRT in December 2007 to discuss recent bycatch and abundance information to assist the HPTRT in providing recommendations to NMFS on additional measures to reduce harbor porpoise takes. As described in the preamble to the proposed rule for this action, documented interactions between harbor porpoises and gillnet gear were observed both within and outside of existing HPTRP management areas. As such, the HPTRT was charged with providing recommendations to NMFS for modifying the HPTRP that would address both issues. The HPTRT reached consensus on many of the measures that are implemented in this final rule. Once implemented, these measures will achieve a harbor porpoise take level that is below PBR and approaching ZMRG, meeting NMFS' obligations under the MMPA.

Management Areas

Comment 3: The State of Connecticut's Department of Environmental Protection disagreed with the upper northwest boundary of the proposed Southern New England Management Area, requesting that the boundary as it crosses Long Island Sound be moved eastward to be consistent with the Atlantic Large Whale Take Reduction Plan (ALWTRP) exemption line in this area.

Response: NMFS has evaluated the request to modify the western boundary of the Southern New England Management Area in the vicinity of Long Island Sound, and has determined that the modification is not warranted for a variety of reasons. First, the basis provided for modifying the line to become consistent with the exemption line in this area as defined by the ALWTRP is not appropriate. The ALWTRP exemption line was established based on the rarity of large whale sightings westward of the ALWTRP exemption line. The HPTRP Southern New England Management Area was established based on the presence of harbor porpoise in that area.

Regarding consistency, this line was recommended by the HPTRT because it is a boundary line that is consistent with an existing boundary line under the Northeast Multispecies Fishery Management Plan, and is a line with which gillnet fishermen in this area are familiar. The commenter also noted that the ALWTRP exemption line delineates the locations in which residents of the states of New York, Connecticut, and Rhode Island are authorized to fish. However, these authorizations are state-driven; therefore, the boundary line of the Southern New England Management Area will not affect state authority in determining where state permitted vessels may fish.

Comment 4: Two commenters requested that NMFS codify the Northeast Multispecies Fishery Management Plan (FMP) Western Gulf of Maine Closure Area into the HPTRP as recommended by the HPTRT. Both commenters encouraged this in the event that the Western Gulf of Maine Closure Area is removed from the Northeast Multispecies FMP. One commenter noted that the Massachusetts Bay Management Area was originally a Northeast Multispecies FMP closure that was codified into the HPTRP and subsequently removed as a groundfish closure.

Response: NMFS acknowledges that the HPTRT recommended, by consensus, the incorporation of the Multispecies FMP Western Gulf of Maine Closure Area into the HPTRP. However, NMFS disagrees with this recommendation. As described in the preamble to the regulations implementing the HPTRP (63 FR 66464, December 2, 1998), NMFS established the boundaries of the HPTRP management areas based on the distribution of harbor porpoises and bycatch rates along the New England coast. The portion of the Western Gulf of Maine Closure Area that had a high bycatch of harbor porpoises prior to implementation of the HPTRP was included under the HPTRP as part of the Mid-Coast Management Area. Therefore, since the portion of the Western Gulf of Maine Closure Area that has traditionally had high bycatch rates of harbor porpoises is already contained

within the Mid-Coast Management Area under the HPTRP, should the Western Gulf of Maine Closure Area be reopened to gillnet fishing in the future, the area with historically high harbor porpoise bycatch levels is already contained within the overlapping Mid-Coast Management Area under the HPTRP. At the present time, harbor porpoise bycatch information within the remaining portion of the Western Gulf of Maine Closure Area (not overlapping with the Mid-Coast Management Area) does not exist since this area has been closed to gillnet fishing since 1998. Consequently, NMFS cannot evaluate the conservation benefit or the economic impacts of the entire closure area if it were codified under the HPTRP. For these reasons, NMFS believes codifying the Western Gulf of Maine Closure Area under the HPTRP is not warranted at this time.

Comment 5: One commenter requested that NMFS adjust the mesh size requirements or the seasons of the Southern Mid-Atlantic Management Area to not affect striped bass fishermen in this area. Conversely, another commenter commended NMFS for not making adjustments to the Southern Mid-Atlantic Management Area to exempt striped bass fishermen, noting that it is outside of common practice for a take reduction plan to regulate by target species, rather than by gear type.

Response: NMFS decided not to modify the closure period or the definition of large mesh gillnets for the Southern Mid-Atlantic Management Area. To ensure adequate management of incidental interactions between marine mammals and fisheries, take reduction plans manage fisheries by gear type, rather than by sub-fisheries or target species. In addition, modifying the definition of large mesh gillnets would conflict with the Bottlenose Dolphin Take Reduction Plan, as this plan uses the same definition, and therefore would likely result in confusion for gillnet fishermen in this region.

Further, during the December 2007 HPTRT meeting, a member requested that the HPTRT consider a verbal proposal to exempt striped bass fishermen using large mesh gillnets in Virginia state waters from the seasonal large mesh gillnet closure from February 15 through March 15 in the Southern Mid-Atlantic Management Area. The rationale provided for the exemption was that this closure affected the brief window of opportunity for fishing for the striped bass ocean fishing season for southern states. The HPTRT did not have sufficient time to fully discuss this request at the December meeting. Therefore, NMFS included this issue as a topic for discussion on the agenda for the January 2008 HPTRT follow-up teleconference meeting.

Prior to the teleconference, the HPTRT representative from the Commonwealth of Virginia sent the meeting facilitator a report completed by the Virginia Institute of Marine Science to further support the request for an exemption. This document was forwarded to NMFS and the HPTRT for consideration during the teleconference.

The report examined net size selectivity for capturing striped bass in Virginia's coastal and estuarine waters from mid-February through March of 2005, indicating that 8-inch (20.32-cm) mesh nets captured striped bass of legal size 99.9 percent of the time, whereas 7-inch (17.78-cm) mesh nets captured legal-sized bass only 70 percent of the time.

During the teleconference, the HPTRT was unable to reach consensus on this issue. After the teleconference, NMFS requested that Virginia submit a proposal outlining the exemption request and justification of its necessity. The proposal requested an adjustment to the definition of large mesh gillnets under the HPTRP by increasing the restricted mesh size from the current 7 inches (17.78 cm) to 8 inches (20.32 cm) for Virginia state waters from February 15 through March 15; the proposal also suggested incorporating a consequence closure strategy for this area. This 1-inch (2.54-cm) increase in mesh size would allow striped bass fishing from February 15 through March 15, and would also reduce the catch of undersized striped bass. This proposal, along with a separate proposal from NMFS, which included either no change or an examination of shifting the closure period to March 1–31, was considered, but, for the reasons provided above, none were adopted by the HPTRT or NMFS.

Pingers

Comment 6: One commenter recommended that NMFS allow the use of pingers that have different specifications from those required by the HPTRP, including the use of pingers that emit a tone of a frequency higher than 10 kHz.

Response: NMFS has not proposed any modifications to the pinger specifications that are outlined in the HPTRP. Recent analyses completed by the NMFS Northeast Fisheries Science Center further support the conclusion that pingers of the current specifications successfully decrease harbor porpoise bycatch in gillnet fisheries when the pingers function properly and are deployed in the correct manner (Palka *et al.,* 2008).

NMFS acknowledges that, in certain areas, pingers may alert seals to the presence of gillnet gear, which can result in depredation on the fish caught in the nets. To alleviate this problem, the HPTRT and others have discussed experimenting with pingers of a higher frequency, in which the pinger is inaudible to seals but is still within the hearing range of harbor porpoises. Higher frequency pingers are currently being used in some gillnet fisheries in Europe. However, to date, no testing has been conducted in U.S. waters to examine the effects of these devices on the Gulf of Maine/Bay of Fundy stock of harbor porpoises and U.S. gillnet fisheries. NMFS cannot incorporate higher frequency pingers into the HPTRP without first examining the effects on harbor porpoises and other marine species. NMFS notes that this action will incorporate a scientific research provision into the HPTRP, which would allow for such experimentation within HPTRP management areas so long as a scientific research permit is acquired. If it becomes necessary, NMFS will revise this rule through notice and comment rulemaking to allow different pinger standards.

Comment 7: One commenter stated that NMFS should provide pinger detection devices to fishery observers to determine if pingers on nets are functioning properly. Alternatively, the commenter recommended that NMFS should provide observers with pingers to give to fishermen in exchange for collecting pingers on each end of an observed harbor porpoise take for testing.

Response: The NMFS Northeast Fishery Observer Program (NEFOP) currently has six open-air pinger detectors that are routinely provided to observers on gillnet vessels for the detection of functioning pingers. NEFOP staff are developing a contract for the design and purchase of new, improved open-air pinger detectors to replace the current detectors. The new detectors will be more durable than the current detectors.

According to the NEFOP Fisheries Observer Program Manual (revised January 1, 2008), observers must record the condition of an active deterrent device (e.g., pinger) immediately following the incidental take of a marine mammal, sea turtle, or sea bird. If possible, immediately preceding an incidental take the observer must also record the condition of the active deterrent device in use. Based on these protocols and the ability of observers to

detect functioning pingers, it is not necessary to exchange new pingers for pingers on gillnet gear in which an incidental take is observed.

Comment 8: One commenter recommended that, due to the difficulty associated with checking pinger functionality at sea, NMFS establish a shoreside pinger inspection program to ensure that all gillnet fishermen fishing in areas in which pingers are mandatory have the required number of fully functional pingers on their gear.

Response: NMFS disagrees that there are difficulties associated with checking pinger functionality at sea. NMFS has strategies and tools in place to check for functioning pingers at sea. First, NMFS has purchased underwater pinger detectors that can check for functioning pingers on gillnet gear while the gear is being fished in the water, or while the gear is being hauled back onto the vessel. NMFS is currently working with state and Federal enforcement partners on the use of these detectors within the HPTRP management areas in New England. The states of Maine, Massachusetts, and Rhode Island have been loaned four of these detectors for use aboard state enforcement vessels during patrols. Additionally, as described in the response to Comment 7, the NEFOP staff is in the process of purchasing new open-air pinger detectors that can check the functionality of pingers on gillnet gear as it is hauled on board the vessel.

Additionally, NMFS disagrees with the necessity to establish a shoreside pinger inspection program, because such a program would be costly and would ultimately not ensure that all gillnet fishermen that fish within the HPTRP management areas have the required number of functional pingers on their gear. NMFS currently has an established pinger training and authorization program, which ensures that gillnet vessel operators receive one-time training in the use of pingers and maintain on board their vessel a valid pinger training authorization provided by NMFS. Additionally, the HPTRT recommended a consequence closure area strategy in New England for the purpose of providing an incentive for increasing compliance with the pinger requirements. This rule will implement this strategy in the GOM and Southern New England (SNE) areas, which are historically areas of high harbor porpoise bycatch. NMFS recognizes the importance of compliance to ensure that the effectiveness of the HPTRP in reducing interactions between harbor porpoises and gillnet fisheries is maximized. As such, NMFS will continue to work with its various partners (e.g., states, U.S. Coast Guard, NOAA Office of Law Enforcement, NEFOP) to monitor compliance with the HPTRP and enforce its regulatory components.

Consequence Closure Strategy

Comment 9: Two commenters requested that NMFS act quickly in implementing the consequence closure areas if the target bycatch rates in their respective management areas are exceeded. One commenter suggested that NMFS complete the required analyses for implementing the consequence closure areas in conjunction with this rulemaking in order to expedite the potential implementation of these closures in the future.

Response: NMFS agrees that it is imperative to act as quickly as possible to implement consequence closure areas, should target bycatch rates be exceeded after two consecutive management seasons. Through this action and through completion of the final EA, NMFS has completed the required analyses for implementing consequence closure areas, should they occur over the course of the next 10 years. NMFS has also established language in the regulatory text of this action that explains the annual review process for consequence area closure actions, including the establishment of the consequence closure areas if the target bycatch levels are exceeded; notification to the HPTRT and affected gillnet permit holders (e.g., advance notification through mailings, publication in the **Federal Register,** and postings on the HPTRP Web site) should consequence areas become triggered; and continued monitoring of harbor porpoise bycatch rates after implementation of consequence closure areas.

Outreach and Enforcement

Comment 10: One commenter, in expressing support for the proposed rule, stressed the importance of future outreach and education efforts with the commercial fishing industry as being crucial to the effectiveness of this management plan.

Response: NMFS agrees that future outreach and education efforts are important components for ensuring the effectiveness of the HPTRP. The HPTRP monitoring strategy incorporates a number of measures designed to increase education and outreach efforts. First, NMFS will provide annual updates to the HPTRT to provide compliance and bycatch information. This information is especially important for New England, and therefore this information will focus on the consequence closure area strategy. Also, NMFS will work with its New England and Mid-Atlantic state partners to conduct annual workshops with the gillnet industry to provide updated information on compliance and harbor porpoise bycatch data. In New England, these meetings are especially important for reviewing bycatch rates in those management areas affected by the consequence closure area strategy, and for reviewing how those bycatch rates relate to the target bycatch rates. Finally, NMFS supports the development of additional state education and enforcement efforts to increase compliance with the HPTRP.

Comment 11: One commenter noted that HPTRP enforcement and industry outreach efforts must be more vigorous in the future than they have been in the past.

Response: NMFS agrees with this comment and will continue to work with its various partners, such as state agencies, the U.S. Coast Guard, and the NOAA Office of Law Enforcement, on HPTRP enforcement and industry outreach efforts. By consensus recommendation, the HPTRT state agency members committed to conducting annual workshops with the gillnet industry after publication of this rule to increase compliance with the HPTRP, as well as to provide updated harbor porpoise bycatch and compliance information. These workshops will be especially important in the New England areas that would potentially be affected by the implementation of consequence closure areas. In addition, NMFS will continue to provide pinger training. This training provides information on the HPTRP management areas and requirements, as well as information on the use of pingers. Also, NMFS will continue to maintain its existing outreach efforts, which include ensuring that the HPTRP Web site contains relevant and current information, communicating directly with HPTRT members, and sending permit holder letters to the gillnet industry.

NMFS is committed to maintaining and improving upon its relationship with the U.S. Coast Guard and the NOAA Office of Law Enforcement, as well as its state enforcement partners, to monitor the effectiveness of the HPTRP. As discussed in response to Comment 8, state enforcement officials in Maine, Massachusetts, and Rhode Island have incorporated in-water pinger detectors into their patrols. NMFS is also coordinating with its Federal enforcement partners on the use of this equipment, as well as on the ability to

conduct dedicated enforcement patrols to ensure gillnet gear is in compliance with the HPTRP. Finally, NMFS will coordinate with all of these partners to ensure updated enforcement information is provided to the HPTRT in its annual compliance updates.

Harbor Porpoise Bycatch Estimates

Comment 12: One commenter stated that NMFS should base harbor porpoise bycatch estimates on all regional fisheries in which mortalities and serious injuries occur, including trawl gear and Canadian fisheries.

Response: NMFS monitors harbor porpoise bycatch in all commercial fisheries through the annual SAR process. The majority of fishery interactions for the GOM/BOF stock of harbor porpoises occurs in the Northeast sink gillnet and Mid-Atlantic gillnet fisheries. Bycatch estimates in Canadian gillnet fisheries are unknown, as the fishery has not been observed from 2002 through the present time. NMFS will continue to monitor the annual SARs for interactions between harbor porpoises and all fisheries.

Comment 13: One commenter recommended that NMFS consult with its Canadian counterpart regarding the need to increase Canadian gillnet observer coverage to assess harbor porpoise bycatch in the Canadian sink gillnet fishery.

Response: NMFS agrees. NMFS is working with Canada's Department of Fisheries and Oceans (DFO) to address this issue. Nonetheless, harbor porpoise bycatch in U.S. gillnet fisheries exist and must be addressed by NMFS through the HPTRP.

Changes From the Proposed Rule

There are no changes from the proposed rule.

Classification

The Office of Management and Budget (OMB) has determined that this action is significant for the purposes of Executive Order 12866.

A description of the action and its legal basis are contained in the preamble of this final rule. This final rule does not include any reporting or recordkeeping requirements, nor does it include compliance requirements other than those described in the preamble. No duplicative, overlapping, or conflicting Federal rules have been identified.

NMFS has prepared a final regulatory flexibility analysis (FRFA) that describes the economic impact this rule will have on small entities. A summary of the analysis follows. No comments were received on the initial regulatory flexibility analysis (IRFA) or the economic impacts of the proposed rule.

All of the entities (fishing vessels) affected by this action are considered small entities under the Small Business Act size standards for small fishing businesses. The fisheries affected by this final rule are the Northeast sink gillnet and Mid-Atlantic gillnet fisheries. These fisheries are currently regulated under the HPTRP to reduce the serious injury and mortality of harbor porpoises; this rule implements additional restrictions. The population of vessels affected by this action includes all commercial gillnet vessels fishing in Federal waters from the U.S./Canada border to North Carolina, as well as vessels fishing in state waters that are managed under the HPTRP. In 2006 and under the current HPTRP, there were 975 gillnet vessels that landed an estimated 23,276 mt of fish, generating approximately $40,643,000 in revenue.

In preparing this action, NMFS considered multiple alternatives—Alternative 1, no action; Alternative 2, immediate implementation of closures; Alternative 3, broad-based pinger requirements; Alternative 4, this action, or the "preferred alternative"; and Alternative 5, modified preferred alternative.

Under Alternative 1, NMFS would maintain the status quo HPTRP. This would result in no changes to the current measures under the HPTRP and, as such, would result in no additional economic effects to the affected commercial fisheries. However, this alternative would not achieve the reduction in incidental mortality and serious injury of harbor porpoises in commercial fishing gear required under the MMPA, because it would not reduce the estimated harbor porpoise mortality of 1,063 animals in 2006, which is above the PBR level. Therefore, NMFS rejected this alternative.

Under Alternative 2, NMFS would immediately implement additional area closures to the existing measures of the HPTRP. This alternative includes immediate implementation of the closure areas recommended by the HPTRT, known in this rule as consequence closure areas, in New England. Out of the five alternatives, Alternative 2 had the lowest estimated reduction in harbor porpoise bycatch of all the alternatives considered, at 54 percent, or 573 fewer animals from the status quo 2006 estimate of 1,063 animals. Additionally, Alternative 2 had the highest estimated cost to the commercial fishing industry of all the alternatives considered, with a 5-percent ($1,947,000) reduction in annual revenues. For these reasons, NMFS rejected this alternative.

Under Alternative 3, NMFS would implement broad-based pinger management areas covering the geographic range of the GOM/BOF stock of harbor porpoises in New England and the Mid-Atlantic region. Alternative 3 had a higher estimated cost for the commercial fishing industry per harbor porpoise saved than the preferred alternative (if consequence areas are not triggered), with less than 1-percent ($374,000) reduction in annual revenues, and a lower estimated reduction in harbor porpoise bycatch, at 60 percent. In part because it would result in a higher cost per porpoise saved, while providing a lower reduction in porpoise bycatch than the other alternatives, NMFS rejected this alternative.

Under Alternative 4, existing management areas in New England and the Mid-Atlantic are expanded and additional management areas are created to address areas of high harbor porpoise bycatch. This alternative incorporates additional measures to the existing HPTRP. For New England (Maine through Rhode Island), new measures include (1) additional pinger requirements; (2) the establishment of new management areas; and (3) the incorporation of consequence closure areas should the observed average bycatch rate in certain management areas exceed a specified target bycatch rate averaged over the course of two consecutive management seasons. For the Mid-Atlantic (New York through North Carolina), new measures include (1) the establishment of a new management area, which includes a seasonal closure; and (2) a modification to the large mesh gillnet tie-down spacing requirement (which is not included in the analysis because it would not result in additional costs to gillnet fishermen).

This alternative incorporates the potential for future closures. Accordingly, this analysis examines four different scenarios for this alternative, based on the potential for implementation of consequence closure areas. The first scenario examines impacts of additional HPTRP conservation measures (e.g., establishment of new pinger and closure areas) prior to triggering the closure of any consequence closure area (Pre-closure). The second scenario examines the impacts if only the Coastal Gulf of Maine Consequence Closure Area is implemented (GOM-closure), and the third scenario analyzes the impacts if only the Cape Cod South Expansion and Eastern Cape Cod Consequence Closure

Areas are implemented (SNE-closure). The fourth scenario investigates the impacts should all three consequence closure areas be implemented simultaneously, which would occur if both target bycatch rates are exceeded (GOM/SNE-closures).

(1) The Pre-closure scenario would have the smallest impact on the gillnet industry out of the four scenarios that are possible under this alternative, because it is assumed that, for GOM ports (Maine to South of Boston), 82 to 98 percent of these vessels already own pingers. Therefore, the expanded requirements for the use of pingers are not expected to result in significant impacts. The majority of the affected vessels under this scenario at the regional, or port, level consist of vessels in port groups East of Cape Cod to New Jersey, due to the creation of the Southern New England Management Area with new pinger requirements and the Mudhole South Management Area, which incorporates a seasonal closure. In addition, the impact of the Pre-closure scenario in terms of landings is small. For the East of Cape Cod through New Jersey port groups, the percentage change in landings varies between a 1-percent increase (East of Cape Cod) and a 1-percent reduction. Percentage reductions in revenues for these port groups range from 1 to 3-percent, with the highest (3 percent) in the New York port group.

Revenues for affected vessels under the Pre-closure scenario vary for small vessels (less than 40 ft (12.2 m)) and for large vessels (40 ft (12.2 m) and greater). Revenues for small vessels would be reduced between 1 and 6 percent (approximately $800 to $4,700), while annual revenues for large vessels would be reduced between 1 and 7 percent (approximately $2,600 to $7,200). At the industry (i.e., small entity) level, the Pre-closure scenario can be expected to affect 10 percent of gillnet vessels in the fleet, or 101 vessels. This equates to less than a 1-percent reduction in landings and revenues. Less than a 1-percent (6-mt) decline in overall industry landings is expected, which equates to an approximate $183,000 decrease in revenues.

(2) The GOM-closure scenario would implement the Coastal Gulf of Maine Consequence Closure Area as a result of non-compliance with the HPTRP in three GOM management areas. Therefore, this scenario would most heavily affect GOM port groups, which include those from Maine to South of Boston. At the regional level, the impact on port group landings varies by port group. The New Hampshire port group, which is estimated to face a 14-percent reduction in landings, and the North of Boston port group, with an expected 6-percent decrease, would feel most of the impacts. Slight landings reductions would also be apparent from South of Cape Cod through New Jersey, due to the creation of the SNE and Mudhole South Management Areas.

Percentage reductions in revenues for these port groups would vary consistent with the percentage reductions seen in landings, with the highest reduction, of 11-percent, for the New Hampshire port group, a 5-percent reduction for the North of Boston port group, and a 1-percent reduction for each of four port groups, including Maine, South of Cape Cod, New York, and New Jersey.

Similar to the Pre-closure scenario, revenues for affected vessels under the GOM-closure scenario vary by vessel size class. For small vessels, revenues are reduced in the range of less than 1 percent to 28 percent (approximately $160 to $26,400), while large vessels' revenues would be reduced by less than 1 percent to 4 percent (approximately $160 to $7,800). At the industry level, approximately 17.5 percent of the gillnet fleet, which equates to 171 vessels, could be affected by the GOM-closure scenario, and most of these vessels would be from GOM port groups. Under this scenario, a decrease of approximately 2 percent (466 mt) in annual landings would be expected, which amounts to a decline of approximately $815,000 in annual revenue.

(3) The SNE-closure scenario would implement two consequence closure areas resulting from non-compliance in the Southern New England Management Area: The Cape Cod South Expansion and Eastern Cape Cod Consequence Closure Areas. In this scenario, the South of Cape Cod port group would be most heavily affected, because 64 percent of landings in this port group are caught in the Cape Cod South Expansion Consequence Closure Area. Reductions in landings for the South of Cape Cod port group could be as high as 6 percent. In addition, closure of the Eastern Cape Cod Consequence Closure Area would affect vessels originating from the East of Cape Cod port group, with an approximately 2 percent reduction in landings. Other affected port groups, from New Hampshire through New Jersey, could expect annual landing reductions of up to approximately 3 percent. Percentage reductions in annual revenues for these port groups vary similarly to the percent reductions seen in landings, with the highest reduction, of 10 percent, in the South of Cape Cod port group.

The range of annual revenue reductions for affected vessels differs for small and large vessels, with expected reductions of 1 to 10 percent (approximately $1,300 to $8,100) for small vessels, and reductions of 1 to 25 percent (approximately $1,500 to $15,300) for large vessels. At the industry level, approximately 21.1 percent of gillnet vessels, or 206 vessels, could be affected, with the largest group being from the South of Cape Cod port group. Under this scenario, a decrease in landings of 2 percent (378 mt) could be expected, totaling approximately $1.2 million decline in annual revenues.

(4) The GOM/SNE-closure scenario would result from non-compliance in both the GOM and SNE areas, and would trigger the closure of all three consequence closure areas. Port groups most heavily affected by this scenario include GOM ports from Maine to South of Boston (resulting from implementation of the Coastal Gulf of Maine Consequence Closure Area) and the South of Cape Cod and East of Cape Cod port groups (resulting from implementation of the Cape Cod South Expansion and Eastern Cape Cod Consequence Closure Areas). The New Hampshire and South of Cape Cod port groups would experience the highest reductions in revenues, with 11 percent (approximately $293,000) and 10 percent (approximately $734,000) declines, respectively. Similar percentage losses in landings for these port groups would also be expected.

As with the scenarios described above, the range of annual revenue reductions for affected vessels differs for small and large vessels. Small vessels are expected to face reductions between 2 to 28 percent (approximately $2,600 to $26,400), while large vessels are expected to have revenue reductions between 1 to 25 percent (approximately $1,500 to $15,300). At the industry level, approximately 29.7 percent of gillnet vessels (290 vessels) could be affected. Under this scenario, a decrease in annual landings of 4 percent (838 mt) can be expected. An approximately $2-million decrease in revenues per year could also occur.

Based on this analysis, the Pre-closure scenario has the least amount of annual impacts of the four proposed action scenarios considered, because no consequence closure areas would be seasonally closed. A cost-effectiveness analysis using a 10-yr time horizon was conducted to examine the temporal differences in the impacts of the scenarios considered. Costs in future years were discounted at a rate of 3 percent and 7 percent (for comparison purposes), because the future dollar

does not have the same value as today's dollar. The discounted annual costs were summed to provide an estimate of the Present Value of Cost (PVC) over the 10-yr time period for both a 3 and 7 percent discount rate. The total PVC does not change over the 10-yr time period for scenarios that are fully implemented in the first year, such as the Pre-closure scenario, if consequence closure areas are never triggered. For the other three scenarios that involve the triggering of consequence closure areas at any point during the 10-yr time period, after the third year of implementation of the final rule, the earlier the closure area is implemented, the higher the total PVC would be over the 10-yr period. This occurs because a closure costs more than pinger requirements, so delaying the onset of a closure lowers the total cost.

Of the four proposed action scenarios examined, using a 3-percent discount rate, the Pre-closure scenario had the lowest PVC across the 10-yr time period: $770,000 for each year, which means that no consequence closure areas are triggered during that time period. When using a 7-percent discount rate, the PVC across the 10-yr time period is even lower, at $674,000 for each year.

For the GOM-closure scenario, if the Coastal Gulf of Maine Consequence Closure Area were triggered in year 3 using a 3-percent discount rate, the PVC would be $5,810,000. However, if it were triggered in year 10, the PVC would be $1,337,000. When using a 7-percent discount rate, triggering the consequence area in year 3 would result in a PVC of $4,801,000, and a value of $1,076,000 if triggered in year 10.

Similarly, for the SNE-closure scenario, implementing the consequence closure areas in year 3 using a 3-percent discount rate would cost $8,558,000, whereas it would cost $1,646,000 if implemented in year 10. When using a 7-percent discount rate, triggering these consequence closure areas in year 3 would cost $7,051,000, and $1,296,000 in year 10.

Finally, for the GOM/SNE-closure scenario, implementing all three consequence areas in year 3 would have a PVC of $13,585,000, whereas the PVC would be $2,211,000 if implemented in year 10. When using a 7-percent discount rate, triggering the three consequence closure areas in year 3 would cost $11,168,000, and $1,697,000 if triggered in year 10.

Therefore, of the four scenarios presented, the Pre-closure scenario is the most cost-effective overall when discounting using both a 3 and 7-percent rate. This demonstrates the necessity for immediate industry compliance with the HPTRP requirements in order to avoid triggering the closure of the consequence closure areas and thus higher costs. If any or all of the consequence closure areas are triggered, it is more cost-effective if they are triggered later in the 10-yr time period rather than sooner, under both the 3 and 7-percent discount rate scenarios.

The Alternative 4 Pre-closure scenario is estimated to result in a 59-percent reduction in harbor porpoise bycatch, while the Alternative 4 SNE-closure scenario is estimated to result in a 60-percent reduction. The GOM-closure scenario and the GOM/SNE-closure scenario demonstrated a similar estimated reduction in harbor porpoise bycatch of 63 percent. The GOM/SNE-closure scenario showed a slightly higher decline in the number of animals taken at 671, with a total estimated bycatch for this alternative scenario of 392 animals. This alternative is estimated to cost the commercial fishing industry $108 (7-percent discount rate) or $124 (3-percent discount rate) per harbor porpoise saved in the pre-consequence closure scenario, and $729 (7-percent discount rate) or $882 (3-percent discount rate) per harbor porpoise saved in the consequence closure scenario if triggered in Year 3.

Based on these analyses, Alternative 4 is the preferred alternative because it will achieve the goals of the MMPA while minimizing the overall economic impact to the affected fisheries.

Under Alternative 5, NMFS would implement a modified version of Alternative 4, the preferred alternative. Alternative 5 would remove the Offshore Management Area, remove the large mesh gillnet closure period in the Southern Mid-Atlantic Management Area (February 15 through March 15), and codify the Northeast Multispecies Western Gulf of Maine Closure Area under the HPTRP. Note that this analysis examines two rather than four scenarios for Alternative 5: Pre-closure and GOM/SNE closure. The Alternative 5 Pre-closure scenario is estimated to reduce harbor porpoise bycatch by 59 percent, and the GOM/SNE-closure scenario is estimated to reduce harbor porpoise bycatch by 63 percent. The decline in revenues for the commercial gillnet industry for this alternative are estimated to be less than 1 percent ($127,000) in the pre-consequence closure scenario, and 5 percent ($1,901,000) in the Alternative 5 GOM/SNE closure scenario. These costs are comparatively similar to those incurred under the Pre-closure and GOM/SNE closure scenarios in Alternative 4. However, when considering the range of harbor porpoise bycatch levels that could be expected under each Alternative, Alternative 5 results in a higher maximum bycatch level (i.e., closer to PBR) than all the scenarios considered under Alternative 4. In considering this alternative, NMFS also concluded that the removal of existing HPTRP management areas while harbor porpoise bycatch levels remain above PBR was not warranted. Based on these analyses, NMFS rejected this alternative.

In summary, Alternative 4 will best allow NMFS to achieve its mandates under the MMPA. This action will implement modifications to the HPTRP that will reduce harbor porpoise takes to below the stock's PBR level, while also minimizing the overall impact to affected gillnet fisheries. Impacts will remain low so long as compliance with the pinger requirements in New England does not trigger the implementation of consequence closure areas in the future.

NMFS has determined that this action is consistent to the maximum extent practicable with the approved coastal management programs of Maine, New Hampshire, Massachusetts, Rhode Island, Connecticut, New York, New Jersey, Delaware, Maryland, Virginia, and North Carolina. This determination was submitted for review by the responsible state agencies under section 307 of the Coastal Zone Management Act. The following states submitted responses concurring with NMFS' determination: New Hampshire, Rhode Island, Connecticut, New Jersey, Delaware, Virginia, and North Carolina. Maine, Massachusetts, New York, and Maryland did not respond; therefore, consistency is inferred.

This action contains policies with federalism implications that were sufficient to warrant preparation of a federalism assessment under Executive Order 13132. Accordingly, the Assistant Secretary for Legislative and Intergovernmental Affairs provided notice of the action to the appropriate officials in the states of Maine, New Hampshire, Massachusetts, Rhode Island, Connecticut, New York, New Jersey, Delaware, Maryland, Virginia, and North Carolina.

If a member of the public requests a scientific research permit for conducting research with fishing gear within a HPTRP management area, an existing information collection requirement, approved under OMB Control No. 0648–0084, would apply. The public reporting burden for completing an application for a scientific research permit is estimated to average 32 hr per response, including the time for reviewing instructions, searching existing data

sources, gathering and maintaining the data needed, and completing and reviewing the collection of information. Notwithstanding any other provision of the law, no person is required to respond to, nor shall any person be subject to a penalty for failure to comply with, a collection of information subject to the requirements of the Paperwork Reduction Act, unless that collection of information displays a currently valid OMB Control Number.

NMFS conducted a section 7 consultation on this action pursuant to the Endangered Species Act (ESA), which was concluded on November 19, 2008. Because this action will not have effects on listed species that were not previously considered during the informal consultation on the initial HPTRP (concluded on November 12, 1998), reinitiating consultation on this action is not warranted.

The Small Business Regulatory Enforcement Fairness Act of 1996 states that, for each rule or group of related rules for which an agency is required to prepare a FRFA, the agency shall publish one or more guides to assist small entities in complying with the rule, and shall designate such publications as "small entity compliance guides." The agency shall explain the actions a small entity is required to take to comply with a rule or a group of rules. As part of this rulemaking process, NMFS will send a letter to state and Federal gillnet permit holders in the states of Maine through North Carolina, which letters will serve as the small entity compliance guide. In addition, copies of this final rule and compliance guide (i.e., permit holder letter) are available from NMFS (see **ADDRESSES**) as well as the HPTRP Web site: *http://www.nero.noaa.gov/hptrp.*

References

Palka, D., M. Rossman, A. VanAtten, and C. Orphanides. 2008. Effect of Pingers on Harbor Porpoise and Seal Bycatch in the US Northeast Gillnet Fishery. Paper SC/60/SM2 presented to the Scientific Committee, June 2008 (unpublished); 27pp. Paper available from the IWC Secretariat: *secretariat@iwcoffice.org.*

Waring, G.T., E. Josephson, C.P. Fairfield-Walsh, and K. Maze-Foley (ed). 2009. U.S. Atlantic and Gulf of Mexico Marine Mammal Stock Assessments—2008. NOAA Tech Memo NMFS–NE–210; 440 p.

List of Subjects in 50 CFR Part 229

Administrative practice and procedure, Confidential business information, Fisheries, Marine mammals, Reporting and recordkeeping requirements.

Dated: February 5, 2010.

James W. Balsiger,

Acting Assistant Administrator for Fisheries, National Marine Fisheries Service.

■ For the reasons stated in the preamble, 50 CFR part 229 is amended as follows:

PART 229—AUTHORIZATION FOR COMMERCIAL FISHERIES UNDER THE MARINE MAMMAL PROTECTION ACT OF 1972

■ 1. The authority citation for 50 CFR part 229 continues to read as follows:

Authority: 16 U.S.C. 1361 *et seq.*

■ 2. In § 229.2, the definitions of "Mudhole", "Southern Mid-Atlantic waters", and "Waters off New Jersey" are removed.

■ 3. In § 229.3, paragraphs (q) and (r) are removed and reserved, and paragraphs (m), (n), (o), and (p) are revised to read as follows:

§ 229.3 Prohibitions.

* * * * *

(m) It is prohibited to fish with, set, haul back, possess on board a vessel unless stowed in accordance with § 229.2, or fail to remove sink gillnet gear or gillnet gear capable of catching multispecies from the areas and for the times specified in § 229.33(a)(1), (a)(3), (a)(6), and (a)(8). This prohibition also applies to areas where pingers are required, unless the vessel owner or operator complies with the pinger provisions specified in § 229.33 (a)(2) through (a)(5) and (a)(7). This prohibition does not apply to vessels fishing with a single pelagic gillnet (as described and used as set forth in § 648.81(f)(2)(ii) of this title).

(n) It is prohibited to fish with, set, haul back, possess on board a vessel unless stowed in accordance with § 229.2, or fail to remove gillnet gear from the areas and for the times as specified in § 229.34 (b)(1)(i), (b)(2)(i), (b)(3)(i), or (b)(4)(i).

(o) It is prohibited to fish with, set, haul back, possess on board a vessel unless stowed in accordance with § 229.2, or fail to remove any large mesh or small mesh gillnet gear from the areas and for the times specified in § 229.34(b) unless the gear complies with the specified gear restrictions set forth in the provisions of paragraphs (b)(1)(ii) or (iii), (b)(2)(ii) or (iii), (b)(3)(ii) or (iii), or (b)(4)(ii) or (iii) of § 229.34.

(p) It is prohibited to fish with, set, haul back, possess on board a vessel unless stowed in accordance with § 229.2, or fail to remove sink gillnet gear or gillnet gear capable of catching multispecies in areas where pingers are required, as specified under § 229.33 (a)(2) through (a)(5) and (a)(7), unless the operator on board the vessel during fishing operations possesses and retains on board the vessel a valid pinger training authorization issued by NMFS as specified under § 229.33(c).

* * * * *

■ 4. Section 229.33 is revised to read as follows:

§ 229.33 Harbor Porpoise Take Reduction Plan Regulations—New England.

(a) *Restrictions*—(1) *Northeast Closure Area*—(i) *Area restrictions.* From August 15 through September 13, it is prohibited to fish with, set, haul back, possess on board a vessel unless stowed in accordance with § 229.2, or fail to remove sink gillnet gear or gillnet gear capable of catching multispecies from the Northeast Closure Area. This restriction does not apply to vessels fishing with a single pelagic gillnet (as described and used as set forth in § 648.81(f)(2)(ii) of this title).

(ii) *Area boundaries.* The Northeast Closure Area is bounded by straight lines connecting the following points in the order stated:

NORTHEAST CLOSURE AREA

Point	N. Lat.	W. Long.
NE1	44°27.3′	68°55.0′ (ME shoreline)
NE2	43°29.6′	68°55.0′
NE3	44°04.4′	67°48.7′
NE4	44°06.9′	67°52.8′
NE5	44°31.2′	67°02.7′
NE6	44°45.8′	67°02.7′ (ME shoreline)

(2) *Mid-Coast Management Area*—(i) *Area restrictions.* From September 15 through May 31, it is prohibited to fish with, set, haul back, possess on board a vessel unless stowed in accordance with § 229.2, or fail to remove sink gillnet gear or gillnet gear capable of catching multispecies from the Mid-Coast Management Area, unless the gillnet gear is equipped with pingers in accordance with paragraphs (b) and (c) of this section. This prohibition does not apply to vessels fishing with a single pelagic gillnet (as described and used as set forth in § 648.81(f)(2)(ii) of this title).

(ii) *Area boundaries.* The Mid-Coast Management Area is the area bounded by straight lines connecting the following points in the order stated:

MID-COAST MANAGEMENT AREA

Point	N. Lat.	W. Long.
MC1	42°30.0′	70°50.1′ (MA shoreline)

MID-COAST MANAGEMENT AREA—Continued

Point	N. Lat.	W. Long.
MC2	42°30.0′	70°15.0′
MC3	42°40.0′	70°15.0′
MC4	42°40.0′	70°00.0′
MC5	43°00.0′	70°00.0′
MC6	43°00.0′	69°30.0′
MC7	43°30.0′	69°30.0′
MC8	43°30.0′	69°00.0′
MC9	44°17.8′	69°00.0′ (ME shoreline)

(iii) *Closing procedures.* According to paragraphs (d)(1), (d)(3), and (d)(4) of this section, NMFS shall close the western portion of the Mid-Coast Management Area (west of 70°15′ W. long.) from October 1 through November 30 annually by incorporating it into the Coastal Gulf of Maine Closure Area if, after two full, consecutive management seasons, the average observed bycatch rate of harbor porpoises for the Mid-Coast, Massachusetts Bay, and Stellwagen Bank Management Areas combined exceeds the target harbor porpoise bycatch rate of 0.031 harbor porpoises per metric tons of landings.

(3) *Massachusetts Bay Management Area*—(i) *Area restrictions.* From November 1 through February 28/29 and from April 1 through May 31, it is prohibited to fish with, set, haul back, possess on board a vessel unless stowed in accordance with § 229.2, or fail to remove sink gillnet gear or gillnet gear capable of catching multispecies from the Massachusetts Bay Management Area, unless the gillnet gear is equipped with pingers in accordance with paragraphs (b) and (c) of this section. From March 1 through March 31, it is prohibited to fish with, set, haul back, possess on board a vessel unless stowed in accordance with § 229.2, or fail to remove sink gillnet gear or gillnet gear capable of catching multispecies from the Massachusetts Bay Management Area. These restrictions do not apply to vessels fishing with a single pelagic gillnet (as described in § 648.81(f)(2)(ii) of this title).

(ii) *Area boundaries.* The Massachusetts Bay Management Area is bounded by straight lines connecting the following points in the order stated:

MASSACHUSETTS BAY MANAGEMENT AREA

Point	N. Lat.	W. Long.
MB1	42°30.0′	70°50.1′ (MA shoreline)
MB2	42°30.0′	70°30.0′
MB3	42°15.0′	70°30.0′
MB4	42°15.0′	70°00.0′

MASSACHUSETTS BAY MANAGEMENT AREA—Continued

Point	N. Lat.	W. Long.
MB5	42°00.0′	70°00.0′
MB6	42°00.0′	70°01.2′ (MA shoreline)
MB7	42°00.0′	70°04.8′ (MA shoreline)
MB8	42°00.0′	70°42.2′ (MA shoreline)

(iii) *Closing procedures.* According to paragraphs (d)(1), (d)(3), and (d)(4) of this section, NMFS shall close a portion of the Massachusetts Bay Management Area (north of 42°15′ N. lat.) from October 1 through November 30 annually by incorporating it into the Coastal Gulf of Maine Closure Area if, after two full, consecutive management seasons, the average observed bycatch rate of harbor porpoises for the Massachusetts Bay, Mid-Coast, and Stellwagen Bank Management Areas combined exceeds the target harbor porpoise bycatch rate of 0.031 harbor porpoises per metric tons of landings.

(4) *Stellwagen Bank Management Area*—(i) *Area restrictions.* From November 1 through May 31, it is prohibited to fish with, set, haul back, possess on board a vessel unless stowed in accordance with § 229.2, or fail to remove sink gillnet gear or gillnet gear capable of catching multispecies from the Stellwagen Bank Management Area, unless the gillnet gear is equipped with pingers in accordance with paragraphs (b) and (c) of this section. This restriction does not apply to vessels fishing with a single pelagic gillnet (as described in § 648.81(f)(2)(ii) of this title).

(ii) *Area boundaries.* The Stellwagen Bank Management Area is bounded by straight lines connecting the following points in the order stated:

STELLWAGEN BANK MANAGEMENT AREA

Point	N. Lat.	W. Long.
SB1	42°30.0′	70°30.0′
SB2	42°30.0′	70°15.0′
SB3	42°15.0′	70°15.0′
SB4	42°15.0′	70°30.0′
SB1	42°30.0′	70°30.0′

(iii) *Closing procedures.* According to paragraphs (d)(1), (d)(3), and (d)(4) of this section, NMFS shall close the Stellwagen Bank Management Area from October 1 through November 30 annually by incorporating it into the Coastal Gulf of Maine Closure Area if, after two full, consecutive management seasons, the average observed bycatch rate of harbor porpoises for the Stellwagen Bank, Mid-Coast, and Massachusetts Bay Management Areas combined exceeds the target harbor porpoise bycatch rate of 0.031 harbor porpoises per metric tons of landings.

(5) *Southern New England Management Area*—(i) *Area restrictions.* From December 1 through May 31, it is prohibited to fish with, set, haul back, possess on board a vessel unless stowed in accordance with § 229.2, or fail to remove sink gillnet gear or gillnet gear capable of catching multispecies from the Southern New England Management Area, unless the gillnet gear is equipped with pingers in accordance with paragraphs (b) and (c) of this section. This prohibition does not apply to vessels fishing with a single pelagic gillnet (as described in § 648.81(f)(2)(ii) of this title).

(ii) *Area boundaries.* The Southern New England Management Area is bounded by straight lines connecting the following points in the order stated:

SOUTHERN NEW ENGLAND MANAGEMENT AREA

Point	N. Lat.	W. Long.
SNE1	Western boundary as specified [1].	
SNE2	40°00.0′	72°30.0′
SNE3	40°00.0′	69°30.0′
SNE4	42°15.0′	69°30.0′
SNE5	42°15.0′	70°00.0′
SNE6	41°58.3′	70°00.0′ (MA shoreline)

[1] Bounded on the west by a line running from the Rhode Island shoreline at 41°18.2′ N. lat. and 71°51.5′ W. long. (Watch Hill, RI), southwesterly through Fishers Island, NY, to Race Point, Fishers Island, NY; and from Race Point, Fishers Island, NY; southeasterly to the intersection of the 3-nautical mile line east of Montauk Point; southwesterly along the 3-nautical mile line to the intersection of 72°30.0′ W. long.

(iii) *Closing procedures.* According to paragraphs (d)(2), (d)(3), and (d)(4) of this section, NMFS shall close two areas (Cape Cod South Expansion Closure Area and Eastern Cape Cod Closure Area) within the Southern New England Management Area from February 1 through April 30 annually if, after two full, consecutive management seasons, the average observed bycatch rate of harbor porpoises for the Southern New England Management Area exceeds the target harbor porpoise bycatch rate of 0.023 harbor porpoises per metric tons of landings.

(6) *Cape Cod South Closure Area*—(i) *Area restrictions.* From March 1 through March 31, it is prohibited to fish with, set, haul back, possess on board a vessel unless stowed in accordance with

§ 229.2, or fail to remove sink gillnet gear or gillnet gear capable of catching multispecies from the Cape Cod South Closure Area. This prohibition does not apply to vessels fishing with a single pelagic gillnet (as described in § 648.81(f)(2)(ii) of this title).

(ii) *Area boundaries.* The Cape Cod South Closure Area is bounded by straight lines connecting the following points in the order stated:

CAPE COD SOUTH CLOSURE AREA

Point	N. Lat.	W. Long.
CCS1	41°19.6′	71°45.0′ (RI shoreline)
CCS2	40°40.0′	71°45.0′
CCS3	40°40.0′	70°30.0′
CCS4	41°20.9′	70°30.0′
CCS5	41°23.1′	70°30.0′
CCS6	41°33.1′	70°30.0′ (MA shoreline)

(iii) *Closing procedures.* According to paragraphs (d)(2), (d)(3), and (d)(4) of this section, NMFS shall close the Cape Cod South Closure Area and an area to its south (Cape Cod South Expansion Closure Area) from February 1 through April 30 annually if, after two full, consecutive management seasons, the average observed bycatch rate of harbor porpoises for the Southern New England Management Area exceeds the target harbor porpoise bycatch rate of 0.023 harbor porpoises per metric tons of landings.

(7) *Offshore Management Area*—(i) *Area restrictions.* From November 1 through May 31, it is prohibited to fish with, set, haul back, possess on board a vessel unless stowed in accordance with § 229.2, or fail to remove sink gillnet gear or gillnet gear capable of catching multispecies from the Offshore Management Area, unless the gillnet gear is equipped with pingers in accordance with paragraphs (b) and (c) of this section. This restriction does not apply to vessels fishing with a single pelagic gillnet (as described in § 648.81(f)(2)(ii) of this title).

(ii) *Area boundaries.* The Offshore Management Area is bounded by straight lines connecting the following points in the order stated:

OFFSHORE MANAGEMENT AREA

Point	N. Lat.	W. Long.
OFS1	42°50.0′	69°30.0′
OFS2	43°10.0′	69°10.0′
OFS3	43°10.0′	67°40.0′
OFS4	43°05.8′	67°40.0′ (EEZ boundary)
OFS5	42°53.1′	67°44.5′ (EEZ boundary)

OFFSHORE MANAGEMENT AREA—Continued

Point	N. Lat.	W. Long.
OFS6	42°47.3′	67°40.0′ (EEZ boundary)
OFS7	42°10.0′	67°40.0′
OFS8	42°10.0′	69°30.0′
OFS1	42°50.0′	69°30.0′

(8) *Cashes Ledge Closure Area*—(i) *Area restrictions.* During the month of February, it is prohibited to fish with, set, haul back, possess on board a vessel unless stowed in accordance with § 229.2, or fail to remove sink gillnet gear or gillnet gear capable of catching multispecies from the Cashes Ledge Closure Area. This restriction does not apply to vessels fishing with a single pelagic gillnet (as described in § 648.81(f)(2)(ii) of this title).

(ii) *Area boundaries.* The Cashes Ledge Closure Area is bounded by straight lines connecting the following points in the order stated:

CASHES LEDGE CLOSURE AREA

Point	N. Lat.	W. Long.
CL1	42°30.0′	69°00.0′
CL2	42°30.0′	68°30.0′
CL3	43°00.0′	68°30.0′
CL4	43°00.0′	69°00.0′
CL1	42°30.0′	69°00.0′

(b) *Pingers*—(1) *Pinger specifications.* For the purposes of this subpart, a pinger is an acoustic deterrent device which, when immersed in water, broadcasts a 10 kHz (plus or minus 2 kHz) sound at 132 dB (plus or minus 4 dB) re 1 micropascal at 1 m, lasting 300 milliseconds (plus or minus 15 milliseconds), and repeating every 4 seconds (plus or minus 0.2 seconds).

(2) *Pinger attachment.* An operating and functional pinger must be attached at each end of a string of gillnets and at the bridle of every net, or every 300 feet (91.4 m or 50 fathoms), whichever is closer.

(c) *Pinger training and authorization.* The operator of a vessel may not fish with, set, haul back, possess on board a vessel unless stowed in accordance with § 229.2, or fail to remove sink gillnet gear or gillnet gear capable of catching multispecies in closed areas where pingers are required as specified under paragraph (b) of this section, unless the operator has satisfactorily received pinger training and possesses and retains on board the vessel a valid pinger training authorization issued by NMFS.

(d) *Annual review for consequence area actions*—(1) *Coastal Gulf of Maine Closure Area*—(i) *Establishment.* If, after two full, consecutive management seasons, the calculated average observed bycatch rate of the Mid-Coast, Massachusetts Bay, and Stellwagen Bank Management Areas exceeds the target bycatch rate of 0.031 harbor porpoises per metric tons of landings, the Coastal Gulf of Maine Closure Area shall be established.

(ii) *Restrictions.* From October 1 through November 30, it will be prohibited to fish with, set, haul back, possess on board a vessel unless stowed in accordance with § 229.2, or fail to remove sink gillnet gear or gillnet gear capable of catching multispecies from the Coastal Gulf of Maine Closure Area. This prohibition will not apply to vessels fishing with a single pelagic gillnet (as described in § 648.81(f)(2)(ii) of this title). When the area is open to fishing, the requirements of the Mid-Coast (as described in paragraph (a)(2) of this section), Massachusetts Bay (as described in paragraph (a)(3) of this section), and Stellwagen Bank (as described in paragraph (a)(4) of this section) Management Areas will remain in effect.

(iii) *Area boundaries.* The Coastal Gulf of Maine Closure Area is bounded by straight lines connecting the following points in the order stated:

COASTAL GULF OF MAINE CLOSURE AREA

Point	N. Lat.	W. Long.
CGM1	43°33.0′	70°15.0′ (ME shoreline)
CGM2	42°15.0′	70°15.0′
CGM3	42°15.0′	70°46.0′ (MA shoreline)

(2) *Cape Cod South Expansion and Eastern Cape Cod Closure Areas*—(i) *Establishment.* If, after two full, consecutive management seasons, the calculated average observed bycatch rate of the Southern New England Management Area exceeds the target bycatch rate of 0.023 harbor porpoises per metric tons of landings, the Cape Cod South Expansion Closure Area and the Eastern Cape Cod Closure Area shall be established.

(ii) *Restrictions.* From February 1 through April 30, it will be prohibited to fish with, set, haul back, possess on board a vessel unless stowed in accordance with § 229.2, or fail to remove sink gillnet gear or gillnet gear capable of catching multispecies from the Cape Cod South Expansion Closure Area and the Eastern Cape Cod Closure Area. This prohibition will not apply to vessels fishing with a single pelagic

gillnet (as described in § 648.81(f)(2)(ii) of this title). When the areas are open to fishing, the requirements of the Southern New England Management Area, as described in paragraph (a)(5) of this section, will remain in effect.

(iii) *Area boundaries.* (A) The Cape Cod South Expansion Closure Area is bounded by straight lines connecting the following points in the order stated:

CAPE COD SOUTH EXPANSION CLOSURE AREA

Point	N. Lat.	W. Long.
CCSE1	41°19.6′	71°45.0′ (RI shoreline)
CCSE2	40°00.0′	71°45.0′
CCSE3	40°00.0′	70°00.0′
CCSE4	40°30.0′	70°00.0′
CCSE5	40°30.0′	70°30.0′
CCSE6	41°20.9′	70°30.0′
CCSE7	41°23.1′	70°30.0′
CCSE8	41°33.1′	70°30.0′ (MA shoreline)

(B) The Eastern Cape Cod Closure Area is bounded by straight lines connecting the following points in the order stated:

EASTERN CAPE COD CLOSURE AREA

Point	N. Lat.	W. Long.
ECC1	41°58.3′	70°00.0′ (MA shoreline)
ECC2	42°15.0′	70°00.0′
ECC3	42°15.0′	69°30.0′
ECC4	41°40.0′	69°30.0′
ECC5	41°40.0′	69°56.8′ (MA shoreline)

(3) *Notification.* Upon determining that establishing a consequence closure area as described in paragraphs (d)(1) and (d)(2) of this section is necessary, NMFS will notify, in advance of the closure, the Harbor Porpoise Take Reduction Team and gillnet permit holders through mail notification. NMFS will also publish notification in the **Federal Register** and post information on the Harbor Porpoise Take Reduction Plan Web site related to the establishment of the closure area(s).

(4) If any or all of the closure areas discussed in paragraphs (d)(1) and (d)(2) are implemented, NMFS will monitor harbor porpoise bycatch rates throughout the New England region. The provisions set forth in paragraphs (d)(1) and (d)(2) shall remain in effect each year after implementation until bycatch levels approach a zero mortality and serious injury rate (ZMRG), or until NMFS, in collaboration with the Harbor Porpoise Take Reduction Team, develops and implements new measures.

(e) *Research permits.* An exemption to the requirements set forth in this section may be acquired for the purposes of conducting scientific or gear research within the restricted areas described in this section. A scientific research permit must be acquired through NMFS's existing permit application process, administered by NMFS.

(f) *Other special measures.* The Assistant Administrator may revise the requirements of this section through notification published in the **Federal Register** if:

(1) NMFS determines that pinger operating effectiveness in the commercial gillnet fishery is inadequate to reduce bycatch below the stock's PBR level; or

(2) NMFS determines that the boundary or timing of a closed area is inappropriate, or that gear modifications (including pingers) are not reducing bycatch to below the PBR level.

■ 5. Section 229.34 is revised to read as follows:

§ 229.34 Harbor Porpoise Take Reduction Plan Regulations—Mid-Atlantic.

(a)(1) *Regulated waters.* The regulations in this section apply to all waters in the Mid-Atlantic bounded on the east by 72°30′ W. long. at the southern coast of Long Island, NY at 40°50.1′ N. lat. and on the south by the NC/SC border (33°51.1′ N. lat.), except for the areas exempted in paragraph (a)(2) of this section.

(2) *Exempted waters.* The regulations within this section are not applicable to waters landward of the first bridge over any embayment, harbor, or inlet, or to waters landward of the following lines:

New York

40°45.70′ N., 72°45.15′ W. to 40°45.72′ N., 72°45.30′ W. (Moriches Bay Inlet)

40°37.32′ N., 73°18.40′ W. to 40°38.00′ N., 73°18.56′ W. (Fire Island Inlet)

40°34.40′ N., 73°34.55′ W. to 40°35.08′ N., 73°35.22′ W. (Jones Inlet)

New Jersey/Delaware

39°45.90′ N., 74°05.90′ W. to 39°45.15′ N., 74°06.20′ W. (Barnegat Inlet)

39°30.70′ N., 74°16.70′ W. to 39°26.30′ N., 74°19.75′ W. (Beach Haven to Brigantine Inlet)

38°56.20′ N., 74°51.70′ W. to 38°56.20′ N., 74°51.90′ W. (Cape May Inlet)

All marine and tidal waters landward of the 72 COLREGS demarcation line (International Regulations for Preventing Collisions at Sea, 1972), as depicted or noted on nautical charts published by NOAA (Coast Charts 1:80,000 scale), and as described in 33 CFR part 80. (Delaware Bay)

Maryland/Virginia

38°19.48′ N., 75°05.10′ W. to 38°19.35′ N., 75°05.25′ W. (Ocean City Inlet)

All marine and tidal waters landward of the 72 COLREGS demarcation line (International Regulations for Preventing Collisions at Sea, 1972), as depicted or noted on nautical charts published by NOAA (Coast Charts 1:80,000 scale), and as described in 33 CFR part 80. (Chincoteague to Ship Shoal Inlet)

37°11.10′ N., 75°49.30′ W. to 37°10.65′ N., 75°49.60′ W. (Little Inlet)

37°07.00′ N., 75°53.75′ W. to 37°05.30′ N., 75°56.′ W. (Smith Island Inlet)

North Carolina

All marine and tidal waters landward of the 72 COLREGS demarcation line (International Regulations for Preventing Collisions at Sea, 1972), as depicted or noted on nautical charts published by NOAA (Coast Charts 1:80,000 scale), and as described in 33 CFR part 80.

(b) *Restrictions*—(1) *Waters off New Jersey Management Area.* The Waters off New Jersey Management Area is bounded by straight lines connecting the following points in the order stated:

WATERS OFF NEW JERSEY MANAGEMENT AREA

Point	N. Lat.	W. Long.
WNJ1	40°50.1′	72°30.0′ (NY shoreline)
WNJ2	38°47.0′	72°30.0′
WNJ3	38°47.0′	75°05.0′ (DE shoreline)

(i) *Closure.* From April 1 through April 20, it is prohibited to fish with, set, haul back, possess on board a vessel unless stowed in accordance with § 229.2, or fail to remove any large mesh gillnet gear from the Waters off New Jersey Management Area.

(ii) *Gear limitations and requirements—large mesh gillnet gear.* From January 1 through April 30, except during April 1 through April 20, as described in paragraph (b)(1)(i) of this section, no person may fish with, set, haul back, possess on board a vessel unless stowed in accordance with § 229.2, or fail to remove any large mesh gillnet gear in the Waters off New Jersey Management Area, unless the gear complies with the specified gear characteristics described in paragraphs (b)(1)(ii)(A) through (F) of this section. During this period, no vessel may enter or remain in the Waters off New Jersey Management Area with large mesh gillnet gear on board, unless the gear complies with the specified gear characteristics described in paragraphs (b)(1)(ii)(A) through (F) of this section,

or is stowed in accordance with § 229.2. In order to comply with these specified gear characteristics, the gear must have all the following characteristics:

(A) *Floatline length.* The floatline is not more than 4,800 ft (1,463.0 m).

(B) *Twine size.* The twine is at least 0.035 inches (0.90 mm) in diameter.

(C) *Size of nets.* Individual nets or net panels are not more than 300 ft (91.44 m or 50 fathoms) in length.

(D) *Number of nets.* The total number of individual nets or net panels for a vessel, including all nets on board the vessel, hauled by the vessel, or deployed by the vessel, does not exceed 80.

(E) *Number of nets per string.* The total number of nets or net panels in a net string does not exceed 16.

(F) *Tie-down system.* The gillnet gear is equipped with tie-downs spaced not more than 24 ft (7.3 m) apart along the floatline, and each tie-down is not more than 48 inches (18.90 cm) in length from the point where it connects to the floatline to the point where it connects to the lead line.

(iii) *Gear limitations and requirements—small mesh gillnet gear.* From January 1 through April 30, no person may fish with, set, haul back, possess on board a vessel unless stowed in accordance with § 229.2, or fail to remove any small mesh gillnet gear in the Waters off New Jersey Management Area unless the gear complies with the specified gear characteristics described in paragraphs (b)(1)(iii)(A) through (F) of this section. During this period, no vessel may enter or remain in the Waters off New Jersey Management Area with small mesh gillnet gear on board, unless the gear complies with the specified gear characteristics described in paragraphs (b)(1)(iii)(A) through (F) of this section, or is stowed in accordance with § 229.2. In order to comply with these specified gear characteristics, the gear must have all the following characteristics:

(A) *Floatline length.* The floatline is not more than 3,000 ft (914.4 m) in length.

(B) *Twine size.* The twine is at least 0.031 inches (0.81 mm) in diameter.

(C) *Size of nets.* Individual nets or net panels are not more than 300 ft (91.4 m or 50 fathoms) in length.

(D) *Number of nets.* The total number of individual nets or net panels for a vessel, including all nets on board the vessel, hauled by the vessel or deployed by the vessel, does not exceed 45.

(E) *Number of nets per string.* The total number of nets or net panels in a net string does not exceed 10.

(F) *Tie-down system.* Tie-downs are prohibited.

(2) *Mudhole North Management Area.* The Mudhole North Management Area is bounded by straight lines connecting the following points in the order stated:

MUDHOLE NORTH MANAGEMENT AREA

Point	N. Lat.	W. Long.
MN1	40°28.1′	74°00.0′ (NJ shoreline)
MN2	40°30.0′	74°00.0′
MN3	40°30.0′	73°20.0′
MN4	40°05.0′	73°20.0′
MN5	40°05.0′	74°02.0′ (NJ shoreline)

(i) *Closures.* From February 15 through March 15, it is prohibited to fish with, set, haul back, possess on board a vessel unless stowed in accordance with § 229.2, or fail to remove any large or small mesh gillnet gear from the Mudhole North Management Area. In addition, from April 1 through April 20, it is prohibited to fish with, set, haul back, possess on board a vessel unless stowed in accordance with § 229.2, or fail to remove any large mesh gillnet gear from the Mudhole North Management Area.

(ii) *Gear limitations and requirements—large mesh gillnet gear.* From January 1 through April 30, except during February 15 through March 15 and April 1 through April 20 as described in paragraph (b)(2)(i) of this section, no person may fish with, set, haul back, possess on board a vessel unless stowed in accordance with § 229.2, or fail to remove any large mesh gillnet gear in the Mudhole North Management Area unless the gear complies with the specified gear characteristics described in paragraphs (b)(2)(ii)(A) through (F) of this section. During this period, no vessel may enter or remain in the Mudhole North Management Area with large mesh gillnet gear on board, unless the gear complies with the specified gear characteristics described in paragraphs (b)(2)(ii)(A) through (F) of this section, or is stowed in accordance with § 229.2. In order to comply with these specified gear characteristics, the gear must have all the following characteristics:

(A) *Floatline length.* The floatline is not more than 3,900 ft (1,188.7 m).

(B) *Twine size.* The twine is at least 0.035 inches (0.90 mm) in diameter.

(C) *Size of nets.* Individual nets or net panels are not more than 300 ft (91.44 m or 50 fathoms) in length.

(D) *Number of nets.* The total number of individual nets or net panels for a vessel, including all nets on board the vessel, hauled by the vessel or deployed by the vessel, does not exceed 80.

(E) *Number of nets per string.* The total number of nets or net panels in a net string does not exceed 13.

(F) *Tie-down system.* The gillnet gear is equipped with tie-downs spaced not more than 24 ft (7.3 m) apart along the floatline, and each tie-down is not more than 48 inches (18.90 cm) in length from the point where it connects to the floatline to the point where it connects to the lead line.

(iii) *Gear limitations and requirements—small mesh gillnet gear.* From January 1 through April 30, except during February 15 through March 15 as described in paragraph (b)(2)(i) of this section, no person may fish with, set, haul back, possess on board a vessel unless stowed in accordance with § 229.2, or fail to remove any small mesh gillnet gear in the Mudhole North Management Area unless the gear complies with the specified gear characteristics described in paragraphs (b)(2)(iii)(A) through (F) of this section. During this period, no vessel may enter or remain in the Mudhole North Management Area with small mesh gillnet gear on board unless the gear complies with the specified gear characteristics described in paragraphs (b)(2)(iii)(A) through (F) of this section, or is stowed in accordance with § 229.2. In order to comply with these specified gear characteristics, the gear must have all the following characteristics:

(A) *Floatline length.* The floatline is not more than 3,000 ft (914.4 m) in length.

(B) *Twine size.* The twine is at least 0.031 inches (0.81 mm) in diameter.

(C) *Size of nets.* Individual nets or net panels are not more than 300 ft (91.4 m or 50 fathoms) in length.

(D) *Number of nets.* The total number of individual nets or net panels for a vessel, including all nets on board the vessel, hauled by the vessel or deployed by the vessel, does not exceed 45.

(E) *Number of nets per string.* The total number of nets or net panels in a net string does not exceed 10.

(F) *Tie-down system.* Tie-downs are prohibited.

(3) *Mudhole South Management Area.* The Mudhole South Management Area is bounded by straight lines connecting the following points in the order stated:

MUDHOLE SOUTH MANAGEMENT AREA

Point	N. Lat.	W. Long.
MS1	40°05.0′	73°31.0′
MS2	40°05.0′	73°00.0′
MS3	39°51.0′	73°00.0′
MS4	39°51.0′	73°31.0′
MS1	40°05.0′	73°31.0′

(i) *Closures.* From February 1 through March 15, it is prohibited to fish with, set, haul back, possess on board a vessel unless stowed in accordance with § 229.2, or fail to remove any large or small mesh gillnet gear in the Mudhole South Management Area. In addition, from April 1 through April 20, it is prohibited to fish with, set, haul back, possess on board a vessel unless stowed in accordance with § 229.2, or fail to remove any large mesh gillnet gear from the Mudhole South Management Area.

(ii) *Gear limitations and requirements—large mesh gillnet gear.* From January 1 through April 30, except during February 1 through March 15 and April 1 through April 20 as described in paragraph (b)(3)(i) of this section, no person may fish with, set, haul back, possess on board a vessel unless stowed in accordance with § 229.2, or fail to remove any large mesh gillnet gear in the Mudhole South Management Area unless the gear complies with the specified gear characteristics described in paragraphs (b)(3)(ii)(A) through (F) of this section. During this period, no vessel may enter or remain in the Mudhole South Management Area with large mesh gillnet gear on board, unless the gear complies with the specified gear characteristics described in paragraphs (b)(3)(ii)(A) through (F) of this section, or is stowed in accordance with § 229.2. In order to comply with these specified gear characteristics, the gear must have all the following characteristics:

(A) *Floatline length.* The floatline is not more than 3,900 ft (1,188.7 m).

(B) *Twine size.* The twine is at least 0.035 inches (0.90 mm) in diameter.

(C) *Size of nets.* Individual nets or net panels are not more than 300 ft (91.44 m or 50 fathoms) in length.

(D) *Number of nets.* The total number of individual nets or net panels for a vessel, including all nets on board the vessel, hauled by the vessel or deployed by the vessel, does not exceed 80.

(E) *Number of nets per string.* The total number of nets or net panels in a net string does not exceed 13.

(F) *Tie-down system.* The gillnet gear is equipped with tie-downs spaced not more than 24 ft (7.3 m) apart along the floatline, and each tie-down is not more than 48 inches (18.90 cm) in length from the point where it connects to the floatline to the point where it connects to the lead line.

(iii) *Gear limitations and requirements—small mesh gillnet gear.* From January 1 through April 30 of each year, except during February 1 through March 15 as described in paragraph (b)(3)(i) of this section, no person may fish with, set, haul back, possess on board a vessel unless stowed in accordance with § 229.2, or fail to remove any small mesh gillnet gear in the Mudhole South Management Area unless the gear complies with the specified gear characteristics described in paragraphs (b)(3)(iii)(A) through (F) of this section. During this period, no vessel may enter or remain in the Mudhole South Management Area with small mesh gillnet gear on board unless the gear complies with the specified gear characteristics described in paragraphs (b)(3)(iii)(A) through (F) of this section, or is stowed in accordance with § 229.2. In order to comply with these specified gear characteristics, the gear must have all the following characteristics:

(A) *Floatline length.* The floatline is not more than 3,000 ft (914.4 m) in length.

(B) *Twine size.* The twine is at least 0.031 inches (0.81 mm) in diameter.

(C) *Size of nets.* Individual nets or net panels are not more than 300 ft (91.4 m or 50 fathoms) in length.

(D) *Number of nets.* The total number of individual nets or net panels for a vessel, including all nets on board the vessel, hauled by the vessel or deployed by the vessel, does not exceed 45.

(E) *Number of nets per string.* The total number of nets or net panels in a net string does not exceed 10.

(F) *Tie-down system.* Tie-downs are prohibited.

(4) *Southern Mid-Atlantic Management Area.* The Southern Mid-Atlantic Management Area is bounded by straight lines connecting the following points in the order stated:

SOUTHERN MID-ATLANTIC MANAGEMENT AREA

Point	N. Lat.	W. Long.
SMA1	38°47.0′	75°05.0′ (DE shoreline)
SMA2	38°47.0′	72°30.0′
SMA3	33°51.1′	72°30.0′
SMA4	33°51.1′	78°32.5′ (NC/SC border)

(i) *Closures.* From February 15 through March 15, it is prohibited to fish with, set, haul back, possess on board a vessel unless stowed in accordance with § 229.2, or fail to remove any large mesh gillnet gear from the Southern Mid-Atlantic Management Area.

(ii) *Gear limitations and requirements—large mesh gillnet gear.* From February 1 through April 30, except during February 15 through March 15 as described in paragraph (b)(4)(i) of this section, no person may fish with, set, haul back, possess on board a vessel unless stowed in accordance with § 229.2, or fail to remove any large mesh gillnet gear in the Southern Mid-Atlantic Management Area unless the gear complies with the specified gear characteristics described in paragraphs (b)(4)(ii)(A) through (F) of this section. During this period, no vessel may enter or remain in the Southern Mid-Atlantic Management Area with large mesh gillnet gear on board, unless the gear complies with the specified gear characteristics described in paragraphs (b)(4)(ii)(A) through (F) of this section, or is stowed in accordance with § 229.2. In order to comply with these specified gear characteristics, the gear must have all the following characteristics:

(A) *Floatline length.* The floatline is not more than 3,900 ft (1,188.7 m) in length.

(B) *Twine size.* The twine is at least 0.035 inches (0.90 mm) in diameter.

(C) *Size of nets.* Individual nets or net panels are not more than 300 ft (91.4 m or 50 fathoms) in length.

(D) *Number of nets.* The total number of individual nets or net panels for a vessel, including all nets on board the vessel, hauled by the vessel or deployed by the vessel, does not exceed 80.

(E) *Number of nets per string.* The total number of nets or net panels in a net string does not exceed 13.

(F) *Tie-down system.* The gillnet gear is equipped with tie-downs spaced not more than 24 ft (7.3 m) apart along the floatline, and each tie-down is not more than 48 inches (18.90 cm) in length from the point where it connects to the floatline to the point where it connects to the lead line.

(iii) *Gear limitations and requirements—small mesh gillnet gear.* From February 1 through April 30, no person may fish with, set, haul back, possess on board a vessel unless stowed in accordance with § 229.2, or fail to remove any small mesh gillnet gear in the Southern Mid-Atlantic Management Area unless the gear complies with the specified gear characteristics described in paragraphs (b)(4)(iii)(A) through (F) of this section. During this period, no vessel may enter or remain in the Southern Mid-Atlantic Management Area with small mesh gillnet gear on board, unless the gear complies with the specified gear characteristics described in paragraphs (b)(4)(iii)(A) through (F) of this section, or is stowed in accordance with § 229.2. In order to comply with these specified gear characteristics, the gear must have all the following characteristics:

(A) *Floatline length.* The floatline is no longer than 2,118 ft (645.6 m).

(B) *Twine size.* The twine is at least 0.031 inches (0.81 mm) in diameter.

(C) *Size of nets.* Individual nets or net panels are not more than 300 ft (91.4 m or 50 fathoms) in length.

(D) *Number of nets.* The total number of individual nets or net panels for a vessel, including all nets on board the vessel, hauled by the vessel or deployed by the vessel, does not exceed 45.

(E) *Number of nets per string.* The total number of nets or net panels in a net string does not exceed 7.

(F) *Tie-down system.* Tie-downs are prohibited.

(c) *Research permits.* An exemption to the requirements set forth in this section may be acquired for the purposes of conducting scientific or gear research within the restricted areas described in this section. A scientific research permit must be acquired through NMFS' existing permit application process, administered by NMFS.

(d) *Other special measures.* The Assistant Administrator may revise the requirements of this section through notification published in the **Federal Register** if NMFS determines that the boundary or timing of a closed area is inappropriate, or that gear modifications are not reducing bycatch to below the stock's PBR level.

[FR Doc. 2010–3273 Filed 2–18–10; 8:45 am]

BILLING CODE 3510–22–P

DEPARTMENT OF COMMERCE

National Oceanic and Atmospheric Administration

50 CFR Part 622

[Docket No. 001005281–0369–02]

RIN 0648–XU33

Fisheries of the Caribbean, Gulf of Mexico, and South Atlantic; Coastal Migratory Pelagic Resources of the Gulf of Mexico and South Atlantic; Closure

AGENCY: National Marine Fisheries Service (NMFS), National Oceanic and Atmospheric Administration (NOAA), Commerce.

ACTION: Temporary rule; closure.

SUMMARY: NMFS closes the commercial hook-and-line fishery for king mackerel in the southern Florida west coast subzone. This closure is necessary to protect the Gulf king mackerel resource.

DATES: This rule is effective 12:01 a.m., local time, February 15, 2010, through June 30, 2010.

FOR FURTHER INFORMATION CONTACT: Susan Gerhart, telephone 727–824–5305, fax 727–824–5308, e-mail *susan.gerhart@noaa.gov*.

SUPPLEMENTARY INFORMATION: The fishery for coastal migratory pelagic fish (king mackerel, Spanish mackerel, cero, cobia, little tunny, and, in the Gulf of Mexico only, dolphin and bluefish) is managed under the Fishery Management Plan for the Coastal Migratory Pelagic Resources of the Gulf of Mexico and South Atlantic (FMP). The FMP was prepared by the Gulf of Mexico and South Atlantic Fishery Management Councils (Councils) and is implemented under the authority of the Magnuson-Stevens Fishery Conservation and Management Act (Magnuson-Stevens Act) by regulations at 50 CFR part 622.

On April 27, 2000, NMFS implemented the final rule (65 FR 16336, March 28, 2000) that divided the Florida west coast subzone of the eastern zone into northern and southern subzones, and established their separate quotas. The quota for the hook-and-line fishery in the southern Florida west coast subzone is 520,312 lb (236,010 kg)(50 CFR 622.42(c)(1)(i)(A)(*2*)(*i*)).

Under 50 CFR 622.43(a), NMFS is required to close any segment of the king mackerel commercial fishery when its quota has been reached, or is projected to be reached, by filing a notification at the Office of the **Federal Register**. NMFS has determined the commercial quota for Gulf group king mackerel in the southern Florida west coast subzone will be reached by February 15, 2010. Accordingly, the commercial fishery for Gulf group king mackerel in the southern subzone is closed effective 12:01 a.m., local time, February 15, 2010, through June 30, 2010, the end of the fishing year.

From November 1 through March 31, the southern subzone is that part of the Florida west coast subzone off Collier and Monroe Counties, Florida. This is the area south and west from 25° 20.4' N. lat. (a line directly east from the Miami-Dade/Monroe County boundary on the east coast of Florida) to 26° 19.8' N. lat. (a line directly west from the Lee/Collier County boundary on the west coast of Florida). Beginning April 1, the southern subzone is reduced to the area off Collier County, Florida, between 25° 48' N. lat. and 26° 19.8' N. lat.

During the closure period, no person aboard a vessel for which a commercial permit for king mackerel has been issued may fish for or retain Gulf group king mackerel in Federal waters of the closed subzone. There is one exception, however, for a person aboard a charter vessel or headboat. A person aboard a vessel that has a valid charter/headboat permit and also has a commercial king mackerel permit for coastal migratory pelagic fish may continue to retain king mackerel in or from the closed subzone under the 2–fish daily bag limit, provided the vessel is operating as a charter vessel or headboat. Charter vessels or headboats that hold a commercial king mackerel permit are considered to be operating as a charter vessel or headboat when they carry a passenger who pays a fee or when more than three persons are aboard, including operator and crew.

Classification

This action responds to the best available information recently obtained from the fishery. The Assistant Administrator for Fisheries, NOAA (AA), finds that the need to immediately implement this action to close the fishery constitutes good cause to waive the requirements to provide prior notice and opportunity for public comment pursuant to the authority set forth in 5 U.S.C. 553(b)(B), as such procedures would be unnecessary and contrary to the public interest. Such procedures would be unnecessary because the rule itself already has been subject to notice and comment, and all that remains is to notify the public of the closure.

Allowing prior notice and opportunity for public comment is contrary to the public interest because of the need to immediately implement this action to protect the fishery since the capacity of the fishing fleet allows for rapid harvest of the quota. Prior notice and opportunity for public comment would require time and would potentially result in a harvest well in excess of the established quota.

For the aforementioned reasons, the AA also finds good cause to waive the 30–day delay in effectiveness of the action under 5 U.S.C. 553(d)(3).

This action is taken under 50 CFR 622.43(a) and is exempt from review under Executive Order 12866.

Authority: 16 U.S.C. 1801 *et seq.*

Dated: February 12, 2010.

Emily H. Menashes,

Acting Director, Office of Sustainable Fisheries, National Marine Fisheries Service.

[FR Doc. 2010–3092 Filed 2–12–10; 4:15 pm]

BILLING CODE 3510–22–S